AUTHENTICATED
U.S. GOVERNMENT
INFORMATION
GPO

CODE OF FEDERAL REGULATIONS

Title 36

Parks, Forests, and Public Property

Part 300 to End

Revised as of July 1, 2015

Containing a codification of documents
of general applicability and future effect

As of July 1, 2015

Published by the Office of the Federal Register
National Archives and Records Administration
as a Special Edition of the Federal Register

U.S. GOVERNMENT OFFICIAL EDITION NOTICE

Legal Status and Use of Seals and Logos

The seal of the National Archives and Records Administration (NARA) authenticates the Code of Federal Regulations (CFR) as the official codification of Federal regulations established under the Federal Register Act. Under the provisions of 44 U.S.C. 1507, the contents of the CFR, a special edition of the Federal Register, shall be judicially noticed. The CFR is prima facie evidence of the original documents published in the Federal Register (44 U.S.C. 1510).

It is prohibited to use NARA's official seal and the stylized Code of Federal Regulations logo on any republication of this material without the express, written permission of the Archivist of the United States or the Archivist's designee. Any person using NARA's official seals and logos in a manner inconsistent with the provisions of 36 CFR part 1200 is subject to the penalties specified in 18 U.S.C. 506, 701, and 1017.

Use of ISBN Prefix

This is the Official U.S. Government edition of this publication and is herein identified to certify its authenticity. Use of the 0–16 ISBN prefix is for U.S. Government Publishing Office Official Editions only. The Superintendent of Documents of the U.S. Government Publishing Office requests that any reprinted edition clearly be labeled as a copy of the authentic work with a new ISBN.

GPO U.S. GOVERNMENT PUBLISHING OFFICE

U.S. Superintendent of Documents • Washington, DC 20402–0001

http://bookstore.gpo.gov

Phone: toll-free (866) 512-1800; DC area (202) 512-1800

Table of Contents

	Page
Explanation	vi
Title 36:	
Chapter III—Corps of Engineers, Department of the Army	3
Chapter IV—American Battle Monuments Commission	35
Chapter V—Smithsonian Institution	53
Chapter VI [Reserved]	
Chapter VII—Library of Congress	61
Chapter VIII—Advisory Council on Historic Preservation	83
Chapter IX—Pennsylvania Avenue Development Corporation	135
Chapter X—Presidio Trust	201
Chapter XI—Architectural and Transportation Barriers Compliance Board	273
Chapter XII—National Archives and Records Administration	483
Chapter XV—Oklahoma City National Memorial Trust	755
Chapter XVI—Morris K. Udall Scholarship and Excellence in National Environmental Policy Foundation	759
Finding Aids:	
Table of CFR Titles and Chapters	777
Alphabetical List of Agencies Appearing in the CFR	797

Page

List of CFR Sections Affected 807

Cite this Code: CFR

To cite the regulations in this volume use title, part and section number. Thus, 36 CFR 312.1 *refers to title 36, part 312, section 1.*

Explanation

The Code of Federal Regulations is a codification of the general and permanent rules published in the Federal Register by the Executive departments and agencies of the Federal Government. The Code is divided into 50 titles which represent broad areas subject to Federal regulation. Each title is divided into chapters which usually bear the name of the issuing agency. Each chapter is further subdivided into parts covering specific regulatory areas.

Each volume of the Code is revised at least once each calendar year and issued on a quarterly basis approximately as follows:

Title 1 through Title 16.....as of January 1
Title 17 through Title 27.....as of April 1
Title 28 through Title 41.....as of July 1
Title 42 through Title 50.....as of October 1

The appropriate revision date is printed on the cover of each volume.

LEGAL STATUS

The contents of the Federal Register are required to be judicially noticed (44 U.S.C. 1507). The Code of Federal Regulations is prima facie evidence of the text of the original documents (44 U.S.C. 1510).

HOW TO USE THE CODE OF FEDERAL REGULATIONS

The Code of Federal Regulations is kept up to date by the individual issues of the Federal Register. These two publications must be used together to determine the latest version of any given rule.

To determine whether a Code volume has been amended since its revision date (in this case, July 1, 2015), consult the ''List of CFR Sections Affected (LSA),'' which is issued monthly, and the ''Cumulative List of Parts Affected,'' which appears in the Reader Aids section of the daily Federal Register. These two lists will identify the Federal Register page number of the latest amendment of any given rule.

EFFECTIVE AND EXPIRATION DATES

Each volume of the Code contains amendments published in the Federal Register since the last revision of that volume of the Code. Source citations for the regulations are referred to by volume number and page number of the Federal Register and date of publication. Publication dates and effective dates are usually not the same and care must be exercised by the user in determining the actual effective date. In instances where the effective date is beyond the cutoff date for the Code a note has been inserted to reflect the future effective date. In those instances where a regulation published in the Federal Register states a date certain for expiration, an appropriate note will be inserted following the text.

OMB CONTROL NUMBERS

The Paperwork Reduction Act of 1980 (Pub. L. 96–511) requires Federal agencies to display an OMB control number with their information collection request.

Many agencies have begun publishing numerous OMB control numbers as amendments to existing regulations in the CFR. These OMB numbers are placed as close as possible to the applicable recordkeeping or reporting requirements.

PAST PROVISIONS OF THE CODE

Provisions of the Code that are no longer in force and effect as of the revision date stated on the cover of each volume are not carried. Code users may find the text of provisions in effect on any given date in the past by using the appropriate List of CFR Sections Affected (LSA). For the convenience of the reader, a ''List of CFR Sections Affected'' is published at the end of each CFR volume. For changes to the Code prior to the LSA listings at the end of the volume, consult previous annual editions of the LSA. For changes to the Code prior to 2001, consult the List of CFR Sections Affected compilations, published for 1949-1963, 1964-1972, 1973-1985, and 1986-2000.

''[RESERVED]'' TERMINOLOGY

The term ''[Reserved]'' is used as a place holder within the Code of Federal Regulations. An agency may add regulatory information at a ''[Reserved]'' location at any time. Occasionally ''[Reserved]'' is used editorially to indicate that a portion of the CFR was left vacant and not accidentally dropped due to a printing or computer error.

INCORPORATION BY REFERENCE

What is incorporation by reference? Incorporation by reference was established by statute and allows Federal agencies to meet the requirement to publish regulations in the Federal Register by referring to materials already published elsewhere. For an incorporation to be valid, the Director of the Federal Register must approve it. The legal effect of incorporation by reference is that the material is treated as if it were published in full in the Federal Register (5 U.S.C. 552(a)). This material, like any other properly issued regulation, has the force of law.

What is a proper incorporation by reference? The Director of the Federal Register will approve an incorporation by reference only when the requirements of 1 CFR part 51 are met. Some of the elements on which approval is based are:

(a) The incorporation will substantially reduce the volume of material published in the Federal Register.

(b) The matter incorporated is in fact available to the extent necessary to afford fairness and uniformity in the administrative process.

(c) The incorporating document is drafted and submitted for publication in accordance with 1 CFR part 51.

What if the material incorporated by reference cannot be found? If you have any problem locating or obtaining a copy of material listed as an approved incorporation by reference, please contact the agency that issued the regulation containing that incorporation. If, after contacting the agency, you find the material is not available, please notify the Director of the Federal Register, National Archives and Records Administration, 8601 Adelphi Road, College Park, MD 20740-6001, or call 202-741-6010.

CFR INDEXES AND TABULAR GUIDES

A subject index to the Code of Federal Regulations is contained in a separate volume, revised annually as of January 1, entitled CFR INDEX AND FINDING AIDS. This volume contains the Parallel Table of Authorities and Rules. A list of CFR titles, chapters, subchapters, and parts and an alphabetical list of agencies publishing in the CFR are also included in this volume.

An index to the text of ''Title 3—The President'' is carried within that volume.

The Federal Register Index is issued monthly in cumulative form. This index is based on a consolidation of the ''Contents'' entries in the daily Federal Register.

A List of CFR Sections Affected (LSA) is published monthly, keyed to the revision dates of the 50 CFR titles.

REPUBLICATION OF MATERIAL

There are no restrictions on the republication of material appearing in the Code of Federal Regulations.

INQUIRIES

For a legal interpretation or explanation of any regulation in this volume, contact the issuing agency. The issuing agency's name appears at the top of odd-numbered pages.

For inquiries concerning CFR reference assistance, call 202–741–6000 or write to the Director, Office of the Federal Register, National Archives and Records Administration, 8601 Adelphi Road, College Park, MD 20740-6001 or e-mail *fedreg.info@nara.gov*.

SALES

The Government Publishing Office (GPO) processes all sales and distribution of the CFR. For payment by credit card, call toll-free, 866-512-1800, or DC area, 202-512-1800, M-F 8 a.m. to 4 p.m. e.s.t. or fax your order to 202-512-2104, 24 hours a day. For payment by check, write to: US Government Publishing Office – New Orders, P.O. Box 979050, St. Louis, MO 63197-9000.

ELECTRONIC SERVICES

The full text of the Code of Federal Regulations, the LSA (List of CFR Sections Affected), The United States Government Manual, the Federal Register, Public Laws, Public Papers of the Presidents of the United States, Compilation of Presidential Documents and the Privacy Act Compilation are available in electronic format via *www.ofr.gov*. For more information, contact the GPO Customer Contact Center, U.S. Government Publishing Office. Phone 202-512-1800, or 866-512-1800 (toll-free). E-mail, *ContactCenter@gpo.gov*.

The Office of the Federal Register also offers a free service on the National Archives and Records Administration's (NARA) World Wide Web site for public law numbers, Federal Register finding aids, and related information. Connect to NARA's web site at *www.archives.gov/federal-register*.

The e-CFR is a regularly updated, unofficial editorial compilation of CFR material and Federal Register amendments, produced by the Office of the Federal Register and the Government Publishing Office. It is available at *www.ecfr.gov*.

JOHN HYRUM MARTINEZ,
Acting Director,
Office of the Federal Register.
July 1, 2015.

THIS TITLE

Title 36—PARKS, FORESTS, AND PUBLIC PROPERTY is composed of three volumes. The parts in these volumes are arranged in the following order: Parts 1—199, parts 200—299, and part 300 to end. The contents of these volumes represent all current regulations codified under this title of the CFR as of July 1, 2015.

For this volume, Susannah C. Hurley was Chief Editor. The Code of Federal Regulations publication program is under the direction of John Hyrum Martinez, assisted by Stephen J. Frattini.

Title 36—Parks, Forests, and Public Property

(This book contains part 300 to End)

	Part
CHAPTER III—Corps of Engineers, Department of the Army	312
CHAPTER IV—American Battle Monuments Commission	400
CHAPTER V—Smithsonian Institution	504
CHAPTER VI [Reserved]	
CHAPTER VII—Library of Congress	701
CHAPTER VIII—Advisory Council on Historic Preservation	800
CHAPTER IX—Pennsylvania Avenue Development Corporation	901
CHAPTER X—Presidio Trust	1001
CHAPTER XI—Architectural and Transportation Barriers Compliance Board	1120
CHAPTER XII—National Archives and Records Administration	1200
CHAPTER XV—Oklahoma City National Memorial Trust	1501
CHAPTER XVI—Morris K. Udall Scholarship and Excellence in National Environmental Policy Foundation	1600

CHAPTER III—CORPS OF ENGINEERS, DEPARTMENT OF THE ARMY

Part		*Page*
300–311	[Reserved]	
312	Prohibition of discriminatory practices in water resource development projects	5
327	Rules and regulations governing public use of water resource development projects administered by the Chief of Engineers	5
328	Regulation of seaplane operations at civil works water resource development projects administered by the Chief of Engineers	24
330	Regulation of law enforcement services contracts at civil works water resource projects administered by the Chief of Engineers	27
331	Regulations governing the protection, use and management of the falls of the Ohio National Wildlife Conservation Area, Kentucky and Indiana	30
332–399	[Reserved]	

PARTS 300–311 [RESERVED]

PART 312—PROHIBITION OF DISCRIMINATORY PRACTICES IN WATER RESOURCE DEVELOPMENT PROJECTS

Sec.
312.1 Areas covered.
312.2 Discriminatory practices prohibited.

AUTHORITY: Sec. 4, 58 Stat. 889, as amended; 16 U.S.C. 460d.

§ 312.1 Areas covered.

The regulation covered in this part shall be applicable to all water resource project lands under the supervision of the Secretary of the Army not covered in parts 311 and 326, of this title.

[29 FR 9710, July 18, 1964]

§ 312.2 Discriminatory practices prohibited.

All project land and water areas which are open to the public shall be available for use and enjoyment by the public without regard to race, creed, color or national origin. Each lessee or licensee of a project area under lease or license providing for a public or quasi-public use, including group camp activities, and each concessionaire of a lessee or licensee providing a service to the public including facilities and accommodations, shall not discriminate against any person or persons because of race, creed, color or national origin in the conduct of its operations under the lease, license or concession agreement.

[29 FR 9710, July 18, 1964]

PART 327—RULES AND REGULATIONS GOVERNING PUBLIC USE OF WATER RESOURCE DEVELOPMENT PROJECTS ADMINISTERED BY THE CHIEF OF ENGINEERS

Sec.
327.0 Applicability.
327.1 Policy.
327.2 Vehicles.
327.3 Vessels.
327.4 Aircraft.
327.5 Swimming.
327.6 Picnicking.
327.7 Camping.
327.8 Hunting, fishing, and trapping.
327.9 Sanitation.
327.10 Fires.
327.11 Control of animals.
327.12 Restrictions.
327.13 Explosives, firearms, other weapons and fireworks.
327.14 Public property.
327.15 Abandonment and impoundment of personal property.
327.16 Lost and found articles.
327.17 Advertisement.
327.18 Commercial activities.
327.19 Permits.
327.20 Unauthorized structures.
327.21 Special events.
327.22 Unauthorized occupation.
327.23 Recreation use fees.
327.24 Interference with Government employees.
327.25 Violations of rules and regulations.
327.26 State and local laws.
327.27–327.29 [Reserved]
327.30 Shoreline Management on Civil Works Projects.
327.31 Shoreline management fee schedule.

AUTHORITY: 16 U.S.C. 460d; 16 U.S.C. 4601–6a; Sec. 210, Pub. L. 90–483, 82 Stat. 746.; 33 U.S.C. 1, 28 Stat. 362.

SOURCE: 50 FR 35556, Sept. 3, 1985, unless otherwise noted.

§ 327.0 Applicability.

The regulations covered in this part 327 shall be applicable to water resources development projects, completed or under construction, administered by the Chief of Engineers, and to those portions of jointly administered water resources development projects which are under the administrative jurisdiction of the Chief of Engineers. All other Federal, state and local laws and regulations remain in full force and effect where applicable to those water resources development projects.

[65 FR 6898, Feb. 11, 2000]

§ 327.1 Policy.

(a) It is the policy of the Secretary of the Army, acting through the Chief of Engineers, to manage the natural, cultural and developed resources of each project in the public interest, providing the public with safe and healthful recreational opportunities while protecting and enhancing these resources.

(b) Unless otherwise indicated in this part, the term ''District Commander'' shall include the authorized representatives of the District Commander.

(c) The term ''project'' or ''water resources development project'' refers to the water areas of any water resources development project administered by the Chief of Engineers, without regard to ownership of underlying land, to all lands owned in fee by the Federal Government and to all facilities therein or thereon of any such water resources development project.

(d) All water resources development projects open for public use shall be available to the public without regard to sex, race, color, creed, age, nationality or place of origin. No lessee, licensee, or concessionaire providing a service to the public shall discriminate against any person because of sex, race, creed, color, age, nationality or place of origin in the conduct of the operations under the lease, license or concession contract.

(e) In addition to the regulations in this part 327, all applicable Federal, state and local laws and regulations remain in full force and effect on project lands or waters which are outgranted by the District Commander by lease, license or other written agreement.

(f) The regulations in this part 327 shall be deemed to apply to those lands and waters which are subject to treaties and Federal laws and regulations concerning the rights of Indian Nations and which lands and waters are incorporated, in whole or in part, within water resources development projects administered by the Chief of Engineers, to the extent that the regulations in this part 327 are not inconsistent with such treaties and Federal laws and regulations.

(g) Any violation of any section of this part 327 shall constitute a separate violation for each calendar day in which it occurs.

(h) For the purposes of this part 327, the operator of any vehicle, vessel or aircraft as described in this part, shall be presumed to be responsible for its use on project property. In the event where an operator cannot be determined, the owner of the vehicle, vessel, or aircraft, whether attended or unattended, will be presumed responsible. Unless proven otherwise, such presumption will be sufficient to issue a citation for the violation of regulations applicable to the use of such vehicle, vessel or aircraft as provided for in § 327.25.

(i) For the purposes of this part 327, the registered user of a campsite, picnic area, or other facility shall be presumed to be responsible for its use. Unless proven otherwise, such presumption will be sufficient to issue a citation for the violation of regulations applicable to the use of such facilities as provided for in § 327.25.

[65 FR 6898, Feb. 11, 2000]

§ 327.2 Vehicles.

(a) This section pertains to all vehicles, including, but not limited to, automobiles, trucks, motorcycles, mini-bikes, snowmobiles, dune buggies, all-terrain vehicles, and trailers, campers, bicycles, or any other such equipment.

(b) Vehicles shall not be parked in violation of posted restrictions and regulations, or in such a manner as to obstruct or impede normal or emergency traffic movement or the parking of other vehicles, create a safety hazard, or endanger any person, property or environmental feature. Vehicles so parked are subject to removal and impoundment at the owner's expense.

(c) The operation and/or parking of a vehicle off authorized roadways is prohibited except at locations and times designated by the District Commander. Taking any vehicle through, around or beyond a restrictive sign, recognizable barricade, fence, or traffic control barrier is prohibited.

(d) Vehicles shall be operated in accordance with posted restrictions and regulations.

(e) No person shall operate any vehicle in a careless, negligent or reckless manner so as to endanger any person, property or environmental feature.

(f) At designated recreation areas, vehicles shall be used only to enter or leave the area or individual sites or facilities unless otherwise posted.

(g) Except as authorized by the District Commander, no person shall operate any motorized vehicle without a proper and effective exhaust muffler as defined by state and local laws, or with an exhaust muffler cutout open, or in any other manner which renders the exhaust muffler ineffective in muffling the sound of engine exhaust.

(h) Vehicles shall be operated in accordance with applicable Federal, state and local laws, which shall be regulated by authorized enforcement officials as prescribed in § 327.26.

[65 FR 6899, Feb. 11, 2000]

§ 327.3 Vessels.

(a) This section pertains to all vessels or watercraft, including, but not limited to, powerboats, cruisers, houseboats, sailboats, rowboats, canoes, kayaks, personal watercraft, and any other such equipment capable of navigation on water or ice, whether in motion or at rest.

(b) The placement and/or operation of any vessel or watercraft for a fee or profit upon project waters or lands is prohibited except as authorized by permit, lease, license, or concession contract with the Department of the Army. This paragraph shall not apply to the operation of commercial tows or passenger carrying vessels not based at a Corps project which utilize project waters as a link in continuous transit over navigable waters of the United States.

(c) Vessels or other watercraft may be operated on the project waters, except in prohibited or restricted areas, in accordance with posted regulations and restrictions, including buoys. All vessels or watercraft so required by applicable Federal, state and local laws shall display an appropriate registration on board whenever the vessel is on project waters.

(d) No person shall operate any vessel or other watercraft in a careless, negligent, or reckless manner so as to endanger any person, property, or environmental feature.

(e) All vessels, when on project waters, shall have safety equipment, including personal flotation devices, on board in compliance with U.S. Coast Guard boating safety requirements and in compliance with boating safety laws issued and enforced by the state in which the vessel is located. Owners or operators of vessels not in compliance with this section may be requested to remove the vessel immediately from project waters until such time as items of non-compliance are corrected.

(f) Unless otherwise permitted by Federal, state or local law, vessels or other watercraft, while moored in commercial facilities, community or corporate docks, or at any fixed or permanent mooring point, may only be used for overnight occupancy when such use is incidental to recreational boating. Vessels or other watercraft are not to be used as a place of habitation or residence.

(g) Water skis, parasails, ski-kites and similar devices are permitted in nonrestricted areas except that they may not be used in a careless, negligent, or reckless manner so as to endanger any person, property or environmental feature.

(h) Vessels shall not be attached or anchored to structures such as locks, dams, buoys or other structures unless authorized by the District Commander. All vessels when not in actual use shall be removed from project lands and waters unless securely moored or stored at designated areas approved by the District Commander. The placing of floating or stationary mooring facilities on, adjacent to, or interfering with a buoy, channel marker or other navigational aid is prohibited.

(i) The use at a project of any vessel not constructed or maintained in compliance with the standards and requirements established by the Federal Safe Boating Act of 1971 (Pub. L. 92–75, 85 Stat. 213), or promulgated pursuant to such act, is prohibited.

(j) Except as authorized by the District Commander, no person shall operate any vessel or watercraft without a proper and effective exhaust muffler as defined by state and local laws, or with an exhaust muffler cutout open, or in any other manner which renders the exhaust muffler ineffective in muffling the sound of engine exhaust.

(k) All vessels or other watercraft shall be operated in accordance with applicable Federal, state and local laws, which shall be regulated by authorized enforcement officials as prescribed in § 327.26.

[65 FR 6899, Feb. 11, 2000]

§ 327.4 Aircraft.

(a) This section pertains to all aircraft including, but not limited to, airplanes, seaplanes, helicopters, ultralight aircraft, motorized hang gliders, hot air balloons, any non-powered

flight devices or any other such equipment.

(b) The operation of aircraft on project lands at locations other than those designated by the District Commander is prohibited. This provision shall not be applicable to aircraft engaged on official business of Federal, state or local governments or law enforcement agencies, aircraft used in emergency rescue in accordance with the directions of the District Commander or aircraft forced to land due to circumstances beyond the control of the operator.

(c) No person shall operate any aircraft while on or above project waters or project lands in a careless, negligent or reckless manner so as to endanger any person, property or environmental feature.

(d) Nothing in this section bestows authority to deviate from rules and regulations or prescribed standards of the appropriate State Aeronautical Agency, or the Federal Aviation Administration, including, but not limited to, regulations and standards concerning pilot certifications or ratings, and airspace requirements.

(e) Except in extreme emergencies threatening human life or serious property loss, the air delivery or retrieval of any person, material or equipment by parachute, balloon, helicopter or other means onto or from project lands or waters without written permission of the District Commander is prohibited.

(f) In addition to the provisions in paragraphs (a) through (e) of this section, seaplanes are subject to the following restrictions:

(1) Such use is limited to aircraft utilized for water landings and takeoff, in this part called seaplanes, at the risk of owner, operator and passenger(s).

(2) Seaplane operations contrary to the prohibitions or restrictions established by the District Commander (pursuant to part 328 of this title) are prohibited. The responsibility to ascertain whether seaplane operations are prohibited or restricted is incumbent upon the person(s) contemplating the use of, or using, such waters.

(3) All operations of seaplanes while upon project waters shall be in accordance with U.S. Coast Guard navigation rules for powerboats or vessels and § 327.3.

(4) Seaplanes on project waters and lands in excess of 24 hours shall be securely moored at mooring facilities and at locations permitted by the District Commander. Seaplanes may be temporarily moored on project waters and lands, except in areas prohibited by the District Commander, for periods less than 24 hours providing:

(i) The mooring is safe, secure, and accomplished so as not to damage the rights of the Government or members of the public, and

(ii) The operator remains in the vicinity of the seaplane and reasonably available to relocate the seaplane if necessary.

(5) Commercial operation of seaplanes from project waters is prohibited without written approval of the District Commander following consultation with and necessary clearance from the Federal Aviation Administration (FAA) and other appropriate public authorities and affected interests.

(6) Seaplanes may not be operated at Corps projects between sunset and sunrise unless approved by the District Commander.

[65 FR 6899, Feb. 11, 2000]

§ 327.5 Swimming.

(a) Swimming, wading, snorkeling or scuba diving at one's own risk is permitted, except at launching sites, designated mooring points and public docks, or other areas so designated by the District Commander.

(b) An international diver down, or inland diving flag must be displayed during underwater activities.

(c) Diving, jumping or swinging from trees, bridges or other structures which cross or are adjacent to project waters is prohibited.

[65 FR 6900, Feb. 11, 2000]

§ 327.6 Picnicking.

Picnicking and related day-use activities are permitted, except in those areas where prohibited by the District Commander.

[65 FR 6900, Feb. 11, 2000]

§ 327.7 Camping.

(a) Camping is permitted only at sites and/or areas designated by the District Commander.

(b) Camping at one or more campsites at any one water resource project for a period longer than 14 days during any 30-consecutive-day period is prohibited without the written permission of the District Commander.

(c) The unauthorized placement of camping equipment or other items on a campsite and/or personal appearance at a campsite without daily occupancy for the purpose of reserving that campsite for future occupancy is prohibited.

(d) The digging or leveling of any ground or the construction of any structure without written permission of the District Commander is prohibited.

(e) Occupying or placement of any camping equipment at a campsite which is posted or otherwise marked or indicated as ''reserved'' without an authorized reservation for that site is prohibited.

[65 FR 6900, Feb. 11, 2000]

§ 327.8 Hunting, fishing, and trapping.

(a) Hunting is permitted except in areas and during periods where prohibited by the District Commander.

(b) Trapping is permitted except in areas and during periods where prohibited by the District Commander.

(c) Fishing is permitted except in swimming areas, on boat ramps or other areas designated by the District Commander.

(d) Additional restrictions pertaining to these activities may be established by the District Commander.

(e) All applicable Federal, State and local laws regulating these activities apply on project lands and waters, and shall be regulated by authorized enforcement officials as prescribed in § 327.26.

[65 FR 6900, Feb. 11, 2000]

§ 327.9 Sanitation.

(a) Garbage, trash, rubbish, litter, gray water, or any other waste material or waste liquid generated on the project and incidental to authorized recreational activities shall be either removed from the project or deposited in receptacles provided for that purpose. The improper disposal of such wastes, human and animal waste included, on the project is prohibited.

(b) It is a violation to bring onto a project any household or commercial garbage, trash, rubbish, debris, dead animals or litter of any kind for disposal or dumping without the written permission of the District Commander. For the purposes of this section, the owner of any garbage, trash, rubbish, debris, dead animals or litter of any kind shall be presumed to be responsible for proper disposal. Such presumption will be sufficient to issue a citation for violation.

(c) The spilling, pumping, discharge or disposal of contaminants, pollutants or other wastes, including, but not limited to, human or animal waste, petroleum, industrial and commercial products and by-products, on project lands or into project waters is prohibited.

(d) Campers, picnickers, and all other persons using a water resources development project shall keep their sites free of trash and litter during the period of occupancy and shall remove all personal equipment and clean their sites upon departure.

(e) The discharge or placing of sewage, galley waste, garbage, refuse, or pollutants into the project waters from any vessel or watercraft is prohibited.

[65 FR 6900, Feb. 11, 2000]

§ 327.10 Fires.

(a) Gasoline and other fuels, except that which is contained in storage tanks of vehicles, vessels, camping equipment, or hand portable containers designed for such purpose, shall not be carried onto or stored on the project without written permission of the District Commander.

(b) Fires shall be confined to those areas designated by the District Commander, and shall be contained in fireplaces, grills, or other facilities designated for this purpose. Fires shall not be left unattended and must be completely extinguished prior to departure. The burning of materials that produce toxic fumes, including, but not limited to, tires, plastic and other floatation materials or treated wood products is prohibited. The District Commander may prohibit open burning

of any type for environmental considerations.

(c) Improper disposal of lighted smoking materials, matches or other burning material is prohibited.

[65 FR 6900, Feb. 11, 2000]

§ 327.11 Control of animals.

(a) No person shall bring or allow dogs, cats, or other pets into developed recreation areas or adjacent waters unless penned, caged, on a leash under six feet in length, or otherwise physically restrained. No person shall allow animals to impede or restrict otherwise full and free use of project lands and waters by the public. No person shall allow animals to bark or emit other noise which unreasonably disturbs other people. Animals and pets, except properly trained animals assisting those with disabilities (such as seeing-eye dogs), are prohibited in sanitary facilities, playgrounds, swimming beaches and any other areas so designated by the District Commander. Abandonment of any animal on project lands or waters is prohibited. Unclaimed or unattended animals are subject to immediate impoundment and removal in accordance with state and local laws.

(b) Persons bringing or allowing pets in designated public use areas shall be responsible for proper removal and disposal of any waste produced by these animals.

(c) No person shall bring or allow horses, cattle, or other livestock in camping, picnicking, swimming or other recreation areas or on trails except in areas designated by the District Commander.

(d) Ranging, grazing, watering or allowing livestock on project lands and waters is prohibited except when authorized by lease, license or other written agreement with the District Commander.

(e) Unauthorized livestock are subject to impoundment and removal in accordance with Federal, state and local laws.

(f) Any animal impounded under the provisions of this section may be confined at a location designated by the District Commander, who may assess a reasonable impoundment fee. This fee shall be paid before the impounded animal is returned to its owner(s).

(g) Wild or exotic pets and animals (including but not limited to cougars, lions, bears, bobcats, wolves, and snakes), or any pets or animals displaying vicious or aggressive behavior or otherwise posing a threat to public safety or deemed a public nuisance, are prohibited from project lands and waters unless authorized by the District Commander, and are subject to removal in accordance with Federal, state and local laws.

[65 FR 6901, Feb. 11, 2000]

§ 327.12 Restrictions.

(a) The District Commander may establish and post a schedule of visiting hours and/or restrictions on the public use of a project or portion of a project. The District Commander may close or restrict the use of a project or portion of a project when necessitated by reason of public health, public safety, maintenance, resource protection or other reasons in the public interest. Entering or using a project in a manner which is contrary to the schedule of visiting hours, closures or restrictions is prohibited.

(b) Quiet shall be maintained in all public use areas between the hours of 10 p.m. and 6 a.m., or those hours designated by the District Commander. Excessive noise during such times which unreasonably disturbs persons is prohibited.

(c) Any act or conduct by any person which interferes with, impedes or disrupts the use of the project or impairs the safety of any person is prohibited. Individuals who are boisterous, rowdy, disorderly, or otherwise disturb the peace on project lands or waters may be requested to leave the project.

(d) The operation or use of any sound producing or motorized equipment, including but not limited to generators, vessels or vehicles, in such a manner as to unreasonably annoy or endanger persons at any time or exceed state or local laws governing noise levels from motorized equipment is prohibited.

(e) The possession and/or consumption of alcoholic beverages on any portion of the project land or waters, or the entire project, may be prohibited when designated and posted by the District Commander.

(f) Unless authorized by the District Commander, smoking is prohibited in Visitor Centers, enclosed park buildings and in areas posted to restrict smoking.

[65 FR 6901, Feb. 11, 2000]

§ 327.13 Explosives, firearms, other weapons and fireworks.

(a) The possession of loaded firearms, ammunition, loaded projectile firing devices, bows and arrows, crossbows, or other weapons is prohibited unless:

(1) In the possession of a Federal, state or local law enforcement officer;

(2) Being used for hunting or fishing as permitted under § 327.8, with devices being unloaded when transported to, from or between hunting and fishing sites;

(3) Being used at authorized shooting ranges; or

(4) Written permission has been received from the District Commander.

(b) Possession of explosives or explosive devices of any kind, including fireworks or other pyrotechnics, is prohibited unless written permission has been received from the District Commander.

[65 FR 6901, Feb. 11, 2000]

§ 327.14 Public property.

(a) Destruction, injury, defacement, removal or any alteration of public property including, but not limited to, developed facilities, natural formations, mineral deposits, historical and archaeological features, paleontological resources, boundary monumentation or markers and vegetative growth, is prohibited except when in accordance with written permission of the District Commander.

(b) Cutting or gathering of trees or parts of trees and/or the removal of wood from project lands is prohibited without written permission of the District Commander.

(c) Gathering of dead wood on the ground for use in designated recreation areas as firewood is permitted, unless prohibited and posted by the District Commander.

(d) The use of metal detectors is permitted on designated beaches or other previously disturbed areas unless prohibited by the District Commander for reasons of protection of archaeological, historical or paleontological resources. Specific information regarding metal detector policy and designated use areas is available at the Manager's Office. Items found must be handled in accordance with §§ 327.15 and 327.16 except for non-identifiable items such as coins of value less than $25.

[65 FR 6901, Feb. 11, 2000]

§ 327.15 Abandonment and impoundment of personal property.

(a) Personal property of any kind shall not be abandoned, stored or left unattended upon project lands or waters. After a period of 24 hours, or at any time after a posted closure hour in a public use area or for the purpose of providing public safety or resource protection, unattended personal property shall be presumed to be abandoned and may be impounded and stored at a storage point designated by the District Commander, who may assess a reasonable impoundment fee. Such fee shall be paid before the impounded property is returned to its owner.

(b) Personal property placed on Federal lands or waters adjacent to a private residence, facility and/or developments of any private nature for more than 24 hours without permission of the District Commander shall be presumed to have been abandoned and, unless proven otherwise, such presumption will be sufficient to impound the property and/or issue a citation as provided for in § 327.25.

(c) The District Commander shall, by public or private sale or otherwise, dispose of all lost, abandoned or unclaimed personal property that comes into Government custody or control. However, property may not be disposed of until diligent effort has been made to find the owner, heirs, next of kin or legal representative(s). If the owner, heirs, next of kin or legal representative(s) are determined but not found, the property may not be disposed of until the expiration of 120 days after the date when notice, giving the time and place of the intended sale or other disposition, has been sent by certified or registered mail to that person at the last known address. When diligent efforts to determine the owner, heirs, next of kin or legal representative(s) are unsuccessful, the property may be

disposed of without delay except that if it has a fair market value of $100 or more the property may not be disposed of until 90 days after the date it is received at the storage point designated by the District Commander. The net proceeds from the sale of property shall be conveyed into the Treasury of the United States as miscellaneous receipts.

[65 FR 6901, Feb. 11, 2000]

§ 327.16 Lost and found articles.

All articles found shall be deposited by the finder at the Manager's office or with a ranger. All such articles shall be disposed of in accordance with the procedures set forth in § 327.15.

[65 FR 6902, Feb. 11, 2000]

§ 327.17 Advertisement.

(a) Advertising and the distribution of printed matter is allowed within project land and waters provided that a permit to do so has been issued by the District Commander and provided that this activity is not solely commercial advertising.

(b) An application for such a permit shall set forth the name of the applicant, the name of the organization (if any), the date, time, duration, and location of the proposed advertising or the distribution of printed matter, the number of participants, and any other information required by the permit application form. Permit conditions and procedures are available from the District Commander.

(c) Vessels and vehicles with semipermanent or permanent painted or installed signs are exempt as long as they are used for authorized recreational activities and comply with all other rules and regulations pertaining to vessels and vehicles.

(d) The District Commander shall, without unreasonable delay, issue a permit on proper application unless:

(1) A prior application for a permit for the same time and location has been made that has been or will be granted and the activities authorized by that permit do not reasonably allow multiple occupancy of the particular area; or

(2) It reasonably appears that the advertising or the distribution of printed matter will present a clear and present danger to the public health and safety; or

(3) The number of persons engaged in the advertising or the distribution of printed matter exceeds the number that can reasonably be accommodated in the particular location applied for, considering such things as damage to project resources or facilities, impairment of a protected area's atmosphere of peace and tranquility, interference with program activities, or impairment of public use facilities; or

(4) The location applied for has not been designated as available for the advertising or the distribution of printed matter; or

(5) The activity would constitute a violation of an applicable law or regulation.

(e) If a permit is denied, the applicant shall be so informed in writing, with the reason(s) for the denial set forth.

(f) The District Commander shall designate on a map, which shall be available for inspection in the applicable project office, the locations within the project that are available for the advertising or the distribution of printed matter. Locations may be designated as not available only if the advertising or the distribution of printed matter would:

(1) Cause injury or damage to project resources; or

(2) Unreasonably impair the atmosphere of the peace and tranquility maintained in natural, historic, or commemorative zones; or

(3) Unreasonably interfere with interpretive, visitor service, or other program activities, or with the administrative activities of the Corps of Engineers; or

(4) Substantially impair the operation of public use facilities or services of Corps of Engineers concessioners or contractors.

(5) Present a clear and present danger to the public health and safety.

(g) The permit may contain such conditions as are reasonably consistent with protection and use of the project area for the purposes for which it is established.

(h) No permit shall be issued for a period in excess of 14 consecutive days,

provided that permits may be extended for like periods, upon a new application, unless another applicant has requested use of the same location and multiple occupancy of that location is not reasonably possible.

(i) It is prohibited for persons engaged in the activity under this section to obstruct or impede pedestrians or vehicles, harass project visitors with physical contact or persistent demands, misrepresent the purposes or affiliations of those engaged in the advertising or the distribution of printed matter, or misrepresent whether the printed matter is available without cost or donation.

(j) A permit may be revoked under any of those conditions, as listed in paragraph (d) of this section, that constitute grounds for denial of a permit, or for violation of the terms and conditions of the permit. Such a revocation shall be made in writing, with the reason(s) for revocation clearly set forth, except under emergency circumstances, when an immediate verbal revocation or suspension may be made, to be followed by written confirmation within 72 hours.

(k) Violation of the terms and conditions of a permit issued in accordance with this section may result in the suspension or revocation of the permit.

[65 FR 26137, May 5, 2000]

§ 327.18 Commercial activities.

(a) The engaging in or solicitation of business on project land or waters without the express written permission of the District Commander is prohibited.

(b) It shall be a violation of this part to refuse to or fail to comply with any terms, clauses or conditions of any lease, license or agreements issued by the District Commander.

[65 FR 6902, Feb. 11, 2000]

§ 327.19 Permits.

(a) It shall be a violation of this part to refuse to or fail to comply with the fee requirements or other terms or conditions of any permit issued under the provisions of this part 327.

(b) Permits for floating structures (issued under the authority of § 327.30) of any kind on/in waters of water resources development projects, whether or not such waters are deemed navigable waters of the United States but where such waters are under the management of the Corps of Engineers, shall be issued at the discretion of the District Commander under the authority of this section. District Commanders will delineate those portions of the navigable waters of the United States where this provision is applicable and post notices of this designation in the vicinity of the appropriate Manager's office.

(c) Permits for non-floating structures (issued under the authority of § 327.30) of any kind constructed, placed in or affecting waters of water resources development projects where such waters are deemed navigable waters of the U.S. shall be issued under the provisions of section 10 of the Rivers and Harbors Act approved March 3, 1899 (33 U.S.C. 403). If a discharge of dredged or fill material in these waters is involved, a permit is required under section 404 of the Clean Water Act (33 U.S.C. 1344). (See 33 CFR parts 320 through 330.)

(d) Permits for non-floating structures (issued under the authority of § 327.30) of any kind in waters of water resources development projects, where such waters are under the management of the Corps of Engineers and where such waters are not deemed navigable waters of the United States, shall be issued as set forth in paragraph (b) of this section. If a discharge of dredged or fill material into any water of the United States is involved, a permit is required under section 404 of the Clean Water Act (33 U.S.C. 1344) (See 33 CFR parts 320 through 330). Water quality certification may be required pursuant to Section 401 of the Clean Water Act (33 U.S.C. 1341).

(e) Shoreline Use Permits to authorize private shoreline use facilities, activities or development (issued under the authority of § 327.30) may be issued in accordance with the project Shoreline Management Plan. Failure to comply with the permit conditions issued under § 327.30 is prohibited.

[65 FR 6902, Feb. 11, 2000]

§ 327.20 Unauthorized structures.

The construction, placement, or existence of any structure (including, but not limited to, roads, trails, signs, nonportable hunting stands or blinds, buoys, docks, or landscape features) of any kind under, upon, in or over the project lands, or waters is prohibited unless a permit, lease, license or other appropriate written authorization has been issued by the District Commander. The design, construction, placement, existence or use of structures in violation of the terms of the permit, lease, license, or other written authorization is prohibited. The government shall not be liable for the loss of, or damage to, any private structures, whether authorized or not, placed on project lands or waters. Unauthorized structures are subject to summary removal or impoundment by the District Commander. Portable hunting stands, climbing devices, steps, or blinds, that are not nailed or screwed into trees and are removed at the end of a day's hunt may be used.

[65 FR 6902, Feb. 11, 2000]

§ 327.21 Special events.

(a) Special events including, but not limited to, water carnivals, boat regattas, fishing tournaments, music festivals, dramatic presentations or other special recreation programs are prohibited unless written permission has been granted by the District Commander. Where appropriate, District Commanders can provide the state a blanket letter of permission to permit fishing tournaments while coordinating the scheduling and details of tournaments with individual projects. An appropriate fee may be charged under the authority of § 327.23.

(b) The public shall not be charged any fee by the sponsor of such event unless the District Commander has approved in writing (and the sponsor has properly posted) the proposed schedule of fees. The District Commander shall have authority to revoke permission, require removal of any equipment, and require restoration of an area to pre-event condition, upon failure of the sponsor to comply with terms and conditions of the permit/permission or the regulations in this part 327.

[65 FR 6902, Feb. 11, 2000]

§ 327.22 Unauthorized occupation.

(a) Occupying any lands, buildings, vessels or other facilities within water resource development projects for the purpose of maintaining the same as a full-or part-time residence without the written permission of the District Commander is prohibited. The provisions of this section shall not apply to the occupation of lands for the purpose of camping, in accordance with the provisions of § 327.7.

(b) Use of project lands or waters for agricultural purposes is prohibited except when in compliance with terms and conditions authorized by lease, license or other written agreement issued by the District Commander.

[65 FR 6903, Feb. 11, 2000]

§ 327.23 Recreation use fees.

(a) In accordance with the Land and Water Conservation Fund Act of 1965 (16 U.S.C. 460l) and the Omnibus Budget Reconciliation Act of 1993, Pub. L. 103–66, the Corps of Engineers collects day use fees, special recreation use fees and/or special permit fees for the use of specialized sites, facilities, equipment or services related to outdoor recreation furnished at Federal expense.

(b) Where such fees are charged, the District Commander shall insure that clear notice of fee requirements is prominently posted at each area, and at appropriate locations therein and that the notice be included in publications distributed at such areas. Failure to pay authorized recreation use fees as established pursuant to Pub. L. 88–578, 78 Stat. 897, as amended (16 U.S.C. 460l–6a), is prohibited and is punishable by a fine of not more than $100.

(c) Failure to pay authorized day use fees, and/or properly display applicable receipt, permit or pass is prohibited.

(d) Any Golden Age or Golden Access Passport permittee shall be entitled, upon presentation of such a permit, to utilize special recreation facilities at a rate of 50 percent off the established use fee at Federally operated areas.

Fraudulent use of a Golden Age or Golden Access Passport is prohibited.

[65 FR 6903, Feb. 11, 2000]

§ 327.24 Interference with Government employees.

(a) It is a Federal crime pursuant to the provisions of sections 111 and 1114 of Title 18, United States Code, to forcibly assault, resist, oppose, impede, intimidate, or interfere with, attempt to kill or kill any civilian official or employee for the U.S. Army Corps of Engineers engaged in the performance of his or her official duties, or on account of the performance of his or her official duties. Such actions or interference directed against a Federal employee while carrying out the regulations in this part are violation of such regulations and may be a state crime pursuant to the laws of the state where they occur.

(b) Failure to comply with a lawful order issued by a Federal employee acting pursuant to the regulations in this part shall be considered as interference with that employee while engaged in the performance of their official duties. Such interference with a Federal employee includes failure to provide a correct name, address or other information deemed necessary for identification upon request of the Federal employee, when that employee is authorized by the District Commander to issue citations in the performance of the employee's official duties.

[65 FR 6903, Feb. 11, 2000]

§ 327.25 Violations of rules and regulations.

(a) Any person who violates the provisions of the regulations in this part, other than for a failure to pay authorized recreation use fees as separately provided for in § 327.23, may be punished by a fine of not more than $5,000 or imprisonment for not more than six months or both and may be tried and sentenced in accordance with the provisions of section 3401 of Title 18, United States Code. Persons designated by the District Commander shall have the authority to issue a citation for violation of the regulations in this part, requiring any person charged with the violation to appear before the United States Magistrate within whose jurisdiction the affected water resources development project is located (16 U.S.C. 460d).

(b) Any person who commits an act against any official or employee of the U.S. Army Corps of Engineers that is a crime under the provisions of section 111 or section 1114 of Title 18, United States Code or under provisions of pertinent state law may be tried and sentenced as further provided under Federal or state law, as the case may be.

[65 FR 6903, Feb. 11, 2000]

§ 327.26 State and local laws.

(a) Except as otherwise provided in this part or by Federal law or regulation, state and local laws and ordinances shall apply on project lands and waters. This includes, but is not limited to, state and local laws and ordinances governing:

(1) Operation and use of motor vehicles, vessels, and aircraft;

(2) Hunting, fishing and trapping;

(3) Use or possession of firearms or other weapons;

(4) Civil disobedience and criminal acts;

(5) Littering, sanitation and pollution; and

(6) Alcohol or other controlled substances.

(b) These state and local laws and ordinances are enforced by those state and local enforcement agencies established and authorized for that purpose.

[65 FR 6903, Feb. 11, 2000]

§§ 327.27–327.29 [Reserved]

§ 327.30 Shoreline Management on Civil Works Projects.

(a) *Purpose.* The purpose of this regulation is to provide policy and guidance on management of shorelines of Civil Works projects where 36 CFR part 327 is applicable.

(b) *Applicability.* This regulation is applicable to all field operating agencies with Civil Works responsibilities except when such application would result in an impingement upon existing Indian rights.

(c) *References.* (1) Section 4, 1944 Flood Control Act, as amended (16 U.S.C. 460d).

(2) The Rivers and Harbors Act of 1894, as amended and supplemented (33 U.S.C. 1)

(3) Section 10, River and Harbor Act of 1899 (33 U.S.C. 403).

(4) National Historic Preservation Act of 1966 (Pub. L. 89–665; 80 Stat. 915) as amended (16 U.S.C. 470 *et seq.*).

(5) The National Environmental Policy Act of 1969 (42 U.S.C. 4321, *et seq.*).

(6) The Clean Water Act (33 U.S.C. 1344, *et seq.*).

(7) The Water Resources Development Act of 1986 (Pub. L. 99–662).

(8) Title 36, chapter III, part 327, Code of Federal Regulations, ''Rules and Regulations Governing Public Use of Water Resource Development Projects Administered by the Chief of Engineers.''

(9) Executive Order 12088 (13 Oct. 78).

(10) 33 CFR parts 320–330, ''Regulatory Programs of the Corps of Engineers.''

(11) ER 1130–2–400, ''Management of Natural Resources and Outdoor Recreation at Civil Works Water Resource Projects.''

(12) EM 385–1–1, ''Safety and Health Requirements Manual.''

(d) *Policy*. (1) It is the policy of the Chief of Engineers to protect and manage shorelines of all Civil Works water resource development projects under Corps jurisdiction in a manner which will promote the safe and healthful use of these shorelines by the public while maintaining environmental safeguards to ensure a quality resource for use by the public. The objectives of all management actions will be to achieve a balance between permitted private uses and resource protection for general public use. Public pedestrian access to and exit from these shorelines shall be preserved. For projects or portions of projects where Federal real estate interest is limited to easement title only, management actions will be appropriate within the limits of the estate acquired.

(2) Private shoreline uses may be authorized in designated areas consistent with approved use allocations specified in Shoreline Management Plans. Except to honor written commitments made prior to publication of this regulation, private shoreline uses are not allowed on water resource projects where construction was initiated after December 13, 1974, or on water resource projects where no private shoreline uses existed as of that date. Any existing permitted facilities on these projects will be grandfathered until the facilities fail to meet the criteria set forth in § 327.30(h).

(3) A Shoreline Management Plan, as described in § 327.30(e), will be prepared for each Corps project where private shoreline use is allowed. This plan will honor past written commitments. The plan will be reviewed at least once every five years and revised as necessary. Shoreline uses that do not interfere with authorized project purposes, public safety concerns, violate local norms or result in significant environmental effects should be allowed unless the public participation process identifies problems in these areas. If sufficient demand exists, consideration should be given to revising the shoreline allocations (e.g. increases/decreases). Maximum public participation will be encouraged as set forth in § 327.30(e)(6). Except to honor written commitments made prior to the publication of this regulation, shoreline management plans are not required for those projects where construction was initiated after December 13, 1974, or on projects not having private shoreline use as of that date. In that case, a statement of policy will be developed by the district commander to present the shoreline management policy. This policy statement will be subject to the approval of the division commander. For projects where two or more agencies have jurisdiction, the plan will be cooperatively prepared with the Corps as coordinator.

(4) Where commercial or other public launching and/or moorage facilities are not available within a reasonable distance, group owned mooring facilities may be allowed in Limited Development Areas to limit the proliferation of individual facilities. Generally only one permit will be necessary for a group owned mooring facility with that entity, if incorporated, or with one person from the organization designated as the permittee and responsible for all moorage spaces within the facility. No charge may be made for use of any permitted facility by others nor shall any

commercial activity be engaged in thereon.

(5) The issuance of a private shoreline use permit does not convey any real estate or personal property rights or exclusive use rights to the permit holder. The public's right of access and use of the permit area must be maintained and preserved. Owners of permitted facilities may take necessary precautions to protect their property from theft, vandalism or trespass, but may in no way preclude the public right of pedestrian or vessel access to the water surface or public land adjacent to the facility.

(6) Shoreline Use Permits will only be issued to individuals or groups with legal right of access to public lands.

(e) *Shoreline Management Plan*—(1) *General*. The policies outlined in § 327.30(d) will be implemented through preparation of Shoreline Management Plans, where private shoreline use is allowed.

(2) *Preparation*. A Shoreline Management Plan is prepared as part of the Operational Management Plan. A moratorium on accepting applications for new permits may be placed in effect from the time an announcement of creation of a plan or formal revision of a plan is made until the action is completed.

(3) *Approval*. Approval of Shoreline Management Plans rests with division commanders. After approval, one copy of each project Shoreline Management Plan will be forwarded to HQUSACE (CECW-ON) WASH DC 20314–1000. Copies of the approved plan will also be made available to the public.

(4) *Scope and Format*. The Shoreline Management Plan will consist of a map showing the shoreline allocated to the uses listed in § 327.30(e)(6), related rules and regulations, a discussion of what areas are open or closed to specific activities and facilities, how to apply for permits and other information pertinent to the Corps management of the shoreline. The plan will be prepared in sufficient detail to ensure that it is clear to the public what uses are and are not allowed on the shoreline of the project and why. A process will be developed and presented in the Shoreline Management Plan that prescribes a procedure for review of activities requested but not specifically addressed by the Shoreline Management Plan.

(5) *Shoreline Allocation*. The entire shoreline will be allocated within the classifications below and delineated on a map. Any action, within the context of this rule, which gives a special privilege to an individual or group of individuals on land or water at a Corps project, that precludes use of those lands and waters by the general public, is considered to be private shoreline use. Shoreline allocations cover that land and/or water extending from the edge of the water and waterward with the exception of allocations for the purpose of vegetation modification which extends landward to the project boundary. These allocations should complement, but certainly not contradict, the land classifications in the project master plan. A map of sufficient size and scale to clearly display the shoreline allocations will be conspicuously displayed or readily available for viewing in the project administration office and will serve as the authoritative reference. Reduced or smaller scale maps may be developed for public dissemination but the information contained on these must be identical to that contained on the display map in the project administration office. No changes will be made to these maps except through the formal update process. District commanders may add specific constraints and identify areas having unique characteristics during the plan preparation, review, or updating process in addition to the allocation classifications described below.

(i) *Limited Development Areas*. Limited Development Areas are those areas in which private facilities and/or activities may be allowed consistent with § 327.30(h) and appendix A. Modification of vegetation by individuals may be allowed only following the issuance of a permit in accordance with appendix A. Potential low and high water conditions and underwater topography should be carefully evaluated before shoreline is allocated as Limited Development Area.

(ii) *Public Recreation Areas*. Public Recreation Areas are those areas designated for commercial concessionaire

facilities, Federal, state or other similar public use. No private shoreline use facilities and/or activities will be permitted within or near designated or developed public recreation areas. The term ''near'' depends on the terrain, road system, and other local conditions, so actual distances must be established on a case by case basis in each project Shoreline Management Plan. No modification of land forms or vegetation by private individuals or groups of individuals is permitted in public recreation areas.

(iii) *Protected Shoreline Areas.* Protected Shoreline Areas are those areas designated to maintain or restore aesthetic, fish and wildlife, cultural, or other environmental values. Shoreline may also be so designated to prevent development in areas that are subject to excessive siltation, erosion, rapid dewatering, or exposure to high wind, wave, or current action and/or in areas in which development would interfere with navigation. No Shoreline Use Permits for floating or fixed recreation facilities will be allowed in protected areas. Some modification of vegetation by private individuals, such as clearing a narrow meandering path to the water, or limited mowing, may be allowed only following the issuance of a permit if the resource manager determines that the activity will not adversely impact the environment or physical characteristics for which the area was designated as protected. In making this determination the effect on water quality will also be considered.

(iv) *Prohibited Access Areas.* Prohibited Access Areas are those in which public access is not allowed or is restricted for health, safety or security reasons. These could include hazardous areas near dams, spillways, hydro-electric power stations, work areas, water intake structures, etc. No shoreline use permits will be issued in Prohibited Access Areas.

(6) *Public Participation.* District commanders will ensure public participation to the maximum practicable extent in Shoreline Management Plan formulation, preparation and subsequent revisions. This may be accomplished by public meetings, group workshops, open houses or other public involvement techniques. When master plan updates and preparation of the Shoreline Management Plans are concurrent, public participation may be combined and should consider all aspects of both plans, including shoreline allocation classifications. Public participation will begin during the initial formulation stage and must be broad-based to cover all aspects of public interest. The key to successful implementation is an early and continual public relations program. Projects with significant numbers of permits should consider developing computerized programs to facilitate exchange of information with permittees and to improve program efficiency. Special care will be taken to advise citizen and conservation organizations; Federal, state and local natural resource management agencies; Indian Tribes; the media; commercial concessionaires; congressional liaisons; adjacent landowners and other concerned entities during the formulation of Shoreline Management Plans and subsequent revisions. Notices shall be published prior to public meetings to assure maximum public awareness. Public notices shall be issued by the district commander allowing for a minimum of 30 days for receipt of written public comment in regard to the proposed Shoreline Management Plan or any major revision thereto.

(7) *Periodic Review.* Shoreline Management Plans will be reviewed periodically, but no less often than every five years, by the district commander to determine the need for update. If sufficient controversy or demand exists, consideration should be given, consistent with other factors, to a process of reevaluation of the shoreline allocations and the plan. When changes to the Shoreline Management Plan are needed, the plan will be formally updated through the public participation process. Cumulative environmental impacts of permit actions and the possibility of preparing or revising project NEPA documentation will be considered. District commanders may make minor revisions to the Shoreline Management Plan when the revisions are consistent with policy and funds for a complete plan update are not available.

The amount and type of public involvement needed for such revision is at the discretion of the district commander.

(f) *Instruments for Shoreline Use.* Instruments used to authorize private shoreline use facilities, activities or development are as follows:

(1) *Shoreline Use Permits.* (i) Shoreline Use Permits are issued and enforced in accordance with provisions of 36 CFR 327.19.

(ii) Shoreline Use Permits are required for private structures/activities of any kind (except boats) in waters of Civil Works projects whether or not such waters are deemed navigable and where such waters are under the primary jurisdiction of the Secretary of the Army and under the management of the Corps of Engineers.

(iii) Shoreline Use Permits are required for non-floating structures on waters deemed commercially non-navigable, when such waters are under management of the Corps of Engineers.

(iv) Shoreline Use Permits are also required for land vegetation modification activities which do not involve disruption to land form.

(v) Permits should be issued for a term of five years. To reduce administration costs, one year permits should be issued only when the location or nature of the activity requires annual reissuance.

(vi) Shoreline Use Permits for erosion control may be issued for the life or period of continual ownership of the structure by the permittee and his/her legal spouse.

(2) *Department of the Army Permits.* Dredging, construction of fixed structures, including fills and combination fixed-floating structures and the discharge of dredged or fill material in waters of the United States will be evaluated under authority of section 10, River and Harbor Act of 1899 (33 U.S.C. 403) and section 404 of the Clean Water Act (33 U.S.C. 1344). Permits will be issued where appropriate.

(3) *Real Estate Instruments.* Commercial development activities and activities which involve grading, cuts, fills, or other changes in land form, or establishment of appropriate land-based support facilities required for private floating facilities, will continue to be covered by a lease, license or other legal grant issued through the appropriate real estate element. Shoreline Management Plans should identify the types of activities that require real estate instruments and indicate the general process for obtaining same. Shoreline Use Permits are not required for facilities or activities covered by a real estate instrument.

(g) *Transfer of Permits.* Shoreline Use Permits are non-transferable. They become null and void upon sale or transfer of the permitted facility or the death of the permittee and his/her legal spouse.

(h) *Existing Facilities Now Under Permit.* Implementation of a Shoreline Management Plan shall consider existing permitted facilities and prior written Corps commitments implicit in their issuance. Facilities or activities permitted under special provisions should be identified in a way that will set them apart from other facilities or activities.

(1) Section 6 of Pub. L. 97–140 provides that no lawfully installed dock or appurtenant structures shall be required to be removed prior to December 31, 1989, from any Federal water resources reservoir or lake project administered by the Secretary of the Army, acting through the Chief of Engineers, on which it was located on December 29, 1981, if such property is maintained in usable condition, and does not occasion a threat to life or property.

(2) In accordance with section 1134(d) of Pub. L. 99–662, any houseboat, boathouse, floating cabin or lawfully installed dock or appurtenant structures in place under a valid shoreline use permit as of November 17, 1986, cannot be forced to be removed from any Federal water resources project or lake administered by the Secretary of the Army on or after December 31, 1989, if it meets the three conditions below except where necessary for immediate use for public purposes or higher public use or for a navigation or flood control project.

(i) Such property is maintained in a usable and safe condition,

(ii) Such property does not occasion a threat to life or property, and

(iii) The holder of the permit is in substantial compliance with the existing permit.

(3) All such floating facilities and appurtenances will be formally recognized in an appropriate Shoreline Management Plan. New permits for these permitted facilities will be issued to new owners. If the holder of the permit fails to comply with the terms of the permit, it may be revoked and the holder required to remove the structure, in accordance with the terms of the permit as to notice, time, and appeal.

(i) *Facility Maintenance*. Permitted facilities must be operated, used and maintained by the permittee in a safe, healthful condition at all times. If determined to be unsafe, the resource manager will establish together with the permittee a schedule, based on the seriousness of the safety deficiency, for correcting the deficiency or having it removed, at the permittee's expense. The applicable safety and health prescriptions in EM 385–1–1 should be used as a guide.

(j) *Density of Development*. The density of private floating and fixed recreation facilities will be established in the Shoreline Management Plan for all portions of Limited Development areas consistent with ecological and aesthetic characteristics and prior written commitments. The facility density in Limited Development Areas should, if feasible, be determined prior to the development of adjacent private property. The density of facilities will not be more than 50 per cent of the Limited Development Area in which they are located. Density will be measured by determining the linear feet of shoreline as compared to the width of the facilities in the water plus associated moorage arrangements which restrict the full unobstructed use of that portion of the shoreline. When a Limited Development Area or a portion of a Limited Development area reaches maximum density, notice should be given to the public and facility owners in that area that no additional facilities will be allowed. In all cases, sufficient open area will be maintained for safe maneuvering of watercraft. Docks should not extend out from the shore more than one-third of the width of a cove at normal recreation or multipurpose pool. In those cases where current density of development exceeds the density level established in the Shoreline Management Plan, the density will be reduced to the prescribed level through attrition.

(k) *Permit Fees*. Fees associated with the Shoreline Use Permits shall be paid prior to issuing the permit in accordance with the provisions of § 327.30(c)(1). The fee schedule will be published separately.

APPENDIX A TO § 327.30—GUIDELINES FOR GRANTING SHORELINE USE PERMITS

1. General

a. Decisions regarding permits for private floating recreation facilities will consider the operating objectives and physical characteristics of each project. In developing Shoreline Management Plans, district commanders will give consideration to the effects of added private boat storage facilities on commercial concessions for that purpose. Consistent with established policies, new commercial concessions may be alternatives to additional limited development shoreline.

b. Permits for individually or group owned shoreline use facilities may be granted only in Limited Development Areas when the sites are not near commercial marine services and such use will not despoil the shoreline nor inhibit public use or enjoyment thereof. The installation and use of such facilities will not be in conflict with the preservation of the natural characteristics of the shoreline nor will they result in significant environmental damage. Charges will be made for Shoreline Use Permits in accordance with the separately published fee schedule.

c. Permits may be granted within Limited Development Areas for ski jumps, floats, boat moorage facilities, duck blinds, and other private floating recreation facilities when they will not create a safety hazard and inhibit public use or enjoyment of project waters or shoreline. A Corps permit is not required for temporary ice fishing shelters or duck blinds when they are regulated by a state program. When the facility or activity is authorized by a shoreline use permit, a separate real estate instrument is generally not required.

d. Group owned boat mooring facilities may be permitted in Limited Development Areas where practicable (e.g. where physically feasible in terms of access, water depths, wind protection, etc.).

2. Applications for Shoreline Use Permits

a. Applications for private Shoreline Use Permits will be reviewed with full consideration of the policies set forth in this and referenced regulations, and the Shoreline Management Plan. Fees associated with the Shoreline Use Permit shall be paid prior to issuing the permit. Plans and specifications of the proposed facility shall be submitted and approved prior to the start of construction. Submissions should include engineering details, structural design, anchorage method, and construction materials; the type, size, location and ownership of the facility; expected duration of use; and an indication of willingness to abide by the applicable regulations and terms and conditions of the permit. Permit applications shall also identify and locate any land-based support facilities and any specific safety considerations.

b. Permits will be issued by the district commander or his/her authorized representative on ENG Form 4264–R (Application for Shoreline Use Permit) (appendix B). Computer generated forms may be substituted for ENG Form 4264–R provided all information is included. The computer generated form will be designated, ''ENG Form 4264-R-E, Oct 87 (Electronic generation approved by USACE, Oct 87)''.

c. The following are guides to issuance of Shoreline Use Permits:

(1) Use of boat mooring facilities, including piers and boat (shelters) houses, will be limited to vessel or watercraft mooring and storage of gear essential to vessel or watercraft operation.

(2) Private floating recreation facilities, including boat mooring facilities shall not be constructed or used for human habitation or in a manner which gives the appearance of converting Federal public property on which the facility is located to private, exclusive use. New docks with enclosed sides (i.e. boathouses) are prohibited.

(3) No private floating facility will exceed the minimum size required to moor the owner's boat or boats plus the minimum size required for an enclosed storage locker of oars, life preservers and other items essential to watercraft operation. Specific size limitations may be established in the project Shoreline Management Plan.

(4) All private floating recreation facilities including boat mooring facilities will be constructed in accordance with plans and specifications, approved by the resource manager, or a written certification from a licensed engineer, stating the facility is structurally safe will accompany the initial submission of the plans and specifications.

(5) Procedures regarding permits for individual facilities shall also apply to permits for non-commercial group mooring facilities.

(6) Facilities attached to the shore shall be securely anchored by means of moorings which do not obstruct the free use of the shoreline, nor damage vegetation or other natural features. Anchoring to vegetation is prohibited.

(7) Electrical service and equipment leading to or on private mooring facilities must not pose a safety hazard nor conflict with other recreational use. Electrical installations must be weatherproof and meet all current applicable electrical codes and regulations. The facility must be equipped with quick disconnect fittings mounted above the flood pool elevation. All electrical installations must conform to the National Electric Code and all state, and local codes and regulations. In those states where electricians are licensed, registered, or otherwise certified, a copy of the electrical certification must be provided to the resource manager before a Shoreline Use Permit can be issued or renewed. The resource manager will require immediate removal or disconnection of any electrical service or equipment that is not certified (if appropriate), does not meet code, or is not safely maintained. All new electrical lines will be installed underground. This will require a separate real estate instrument for the service right-of-way. Existing overhead lines will be allowed, as long as they meet all applicable electrical codes, regulations and above guidelines, to include compatibility and safety related to fluctuating water levels.

(8) Private floating recreation facilities will not be placed so as to interfere with any authorized project purposes, including navigation, or create a safety or health hazard.

(9) The district commander or his/her authorized representative may place special conditions on the permit when deemed necessary. Requests for waivers of shoreline management plan permit conditions based on health conditions will be reviewed on a case by case basis by the Operations Manager. Efforts will be made to reduce onerous requirements when a limiting health condition is obvious or when an applicant provides a doctor's certification of need for conditions which are not obvious.

(10) Vegetation modification, including but not limited to, cutting, pruning, chemical manipulation, removal or seeding by private individuals is allowed only in those areas designated as Limited Development Areas or Protected Shoreline Areas. An existing (as of July 1, 1987) vegetation modification permit, within a shoreline allocation which normally would not allow vegetation modification, should be grandfathered. Permittees will not create the appearance of private ownership of public lands.

(11) The term of a permit for vegetation modification will be for five years. Where possible, such permits will be consolidated with other shoreline management permits into a single permit. The district commander

is authorized to issue vegetation modification permits of less than five years for one-time requests or to aid in the consolidation of shoreline management permits.

(12) When issued a permit for vegetative modification, the permittee will delineate the government property line, as surveyed and marked by the government, in a clear but unobtrusive manner approved by the district commander and in accordance with the project Shoreline Management Plan and the conditions of the permit. Other adjoining owners may also delineate the common boundary subject to these same conditions. This delineation may include, but is not limited to, boundary plantings and fencing. The delineation will be accomplished at no cost to the government.

(13) No permit will be issued for vegetation modification in Protected Shoreline Areas until the environmental impacts of the proposed modification are assesed by the resource manager and it has been determined that no significant adverse impacts will result. The effects of the proposed modification on water quality will also be considered in making this determination.

(14) The original of the completed permit application is to be retained by the permittee. A duplicate will be retained in the resource manager's office.

3. Permit Revocation

Permits may be revoked by the district commander when it is determined that the public interest requires such revocation or when the permittee fails to comply with terms and conditions of the permit, the Shoreline Management Plan, or of this regulation. Permits for duck blinds and ice fishing shelters will be issued to cover a period not to exceed 30 days prior to and 30 days after the season.

4. Removal of Facilities

Facilities not removed when specified in the permit or when requested after termination or revocation of the permit will be treated as unauthorized structures pursuant to 36 CFR 327.20.

5. Posting of Permit Number

Each district will procure 5″ × 8″ or larger printed permit tags of light metal or plastic for posting. The permit display tag shall be posted on the facility and/or on the land area covered by the permit, so that it can be visually checked, with ease in accordance with instructions provided by the resource manager. Facilities or activities permitted under special provisions should be identified in a way that will set apart from other facilities or activities.

APPENDIX B TO § 327.30—APPLICATION FOR SHORELINE USE PERMIT [RESERVED]

APPENDIX C TO § 327.30—SHORELINE USE PERMIT CONDITIONS

1. This permit is granted solely to the applicant for the purpose described on the attached permit.

2. The permittee agrees to and does hereby release and agree to save and hold the Government harmless from any and all causes of action, suits at law or equity, or claims or demands or from any liability of any nature whatsoever for or on account of any damages to persons or property, including a permitted facility, growing out of the ownership, construction, operation or maintenance by the permittee of the permitted facilities and/or activities.

3. Ownership, construction, operation, use and maintenance of a permitted facility are subject to the Government's navigation servitude.

4. No attempt shall be made by the permittee to forbid the full and free use by the public of all public waters and/or lands at or adjacent to the permitted facility or to unreasonably interfere with any authorized project purposes, including navigation in connection with the ownership, construction, operation or maintenance of a permitted facility and/or activity.

5. The permittee agrees that if subsequent operations by the Government require an alteration in the location of a permitted facility and/or activity or if in the opinion of the district commander a permitted facility and/or activity shall cause unreasonable obstruction to navigation or that the public interest so requires, the permittee shall be required, upon written notice from the district commander to remove, alter, or relocate the permitted facility, without expense to the Government.

6. The Government shall in no case be liable for any damage or injury to a permitted facility which may be caused by or result from subsequent operations undertaken by the Government for the improvement of navigation or for other lawful purposes, and no claims or right to compensation shall accrue from any such damage. This includes any damage that may occur to private property if a facility is removed for noncompliance with the conditions of the permit.

7. Ownership, construction, operation, use and maintenance of a permitted facility and/or activity are subject to all applicable Federal, state and local laws and regulations. Failure to abide by these applicable laws and regulations may be cause for revocation of the permit.

8. This permit does not convey any property rights either in real estate or material; and does not authorize any injury to private property or invasion of private rights or any infringement of Federal, state or local laws

or regulations, nor does it obviate the necessity of obtaining state or local assent required by law for the construction, operation, use or maintenance of a permitted facility and/or activity.

9. The permittee agrees to construct the facility within the time limit agreed to on the permit issuance date. The permit shall become null and void if construction is not completed within that period. Further, the permittee agrees to operate and maintain any permitted facility and/or activity in a manner so as to provide safety, minimize any adverse impact on fish and wildlife habitat, natural, environmental, or cultural resources values and in a manner so as to minimize the degradation of water quality.

10. The permittee shall remove a permitted facility within 30 days, at his/her expense, and restore the waterway and lands to a condition accepted by the resource manager upon termination or revocation of this permit or if the permittee ceases to use, operate or maintain a permitted facility and/or activity. If the permittee fails to comply to the satisfaction of the resource manager, the district commander may remove the facility by contract or otherwise and the permittee agrees to pay all costs incurred thereof.

11. The use of a permitted boat dock facility shall be limited to the mooring of the permittee's vessel or watercraft and the storage, in enclosed locker facilities, of his/her gear essential to the operation of such vessel or watercraft.

12. Neither a permitted facility nor any houseboat, cabin cruiser, or other vessel moored thereto shall be used as a place of habitation or as a full or part-time residence or in any manner which gives the appearance of converting the public property, on which the facility is located, to private use.

13. Facilities granted under this permit will not be leased, rented, sub-let or provided to others by any means of engaging in commercial activity(s) by the permittee or his/her agent for monetary gain. This does not preclude the permittee from selling total ownership to the facility.

14. Floats and the flotation material for all docks and boat mooring buoys shall be fabricated of materials manufactured for marine use. The float and its flotation material shall be 100% warranted for a minimum of 8 years against sinking, becoming waterlogged, cracking, peeling, fragmenting, or losing beads. All floats shall resist puncture and penetration and shall not be subject to damage by animals under normal conditions for the area. All floats and the flotation material used in them shall be fire resistant. Any float which is within 40 feet of a line carrying fuel shall be 100% impervious to water and fuel. The use of new or recycled plastic or metal drums or non-compartmentalized air containers for encasement or floats is prohibited. Existing floats are authorized until it or its flotation material is no longer serviceable, at which time it shall be replaced with a float that meets the conditions listed above. For any floats installed after the effective date of this specification, repair or replacement shall be required when it or its flotation material no longer performs its designated function or it fails to meet the specifications for which it was originally warranted.

15. Permitted facilities and activities are subject to periodic inspection by authorized Corps representatives. The resource manager will notify the permittee of any deficiencies and together establish a schedule for their correction. No deviation or changes from approved plans will be allowed without prior written approval of the resource manager.

16. Floating facilities shall be securely attached to the shore in accordance with the approved plans by means of moorings which do not obstruct general public use of the shoreline or adversely affect the natural terrain or vegetation. Anchoring to vegetation is prohibited.

17. The permit display tag shall be posted on the permitted facility and/or on the land areas covered by the permit so that it can be visually checked with ease in accordance with instructions provided by the resource manager.

18. No vegetation other than that prescribed in the permit will be damaged, destroyed or removed. No vegetation of any kind will be planted, other than that specifically prescribed in the permit.

19. No change in land form such as grading, excavation or filling is authorized by this permit.

20. This permit is non-transferable. Upon the sale or other transfer of the permitted facility or the death of the permittee and his/her legal spouse, this permit is null and void.

21. By 30 days written notice, mailed to the permittee by certified letter, the district commander may revoke this permit whenever the public interest necessitates such revocation or when the permittee fails to comply with any permit condition or term. The revocation notice shall specify the reasons for such action. If the permittee requests a hearing in writing to the district commander through the resource manager within the 30-day period, the district commander shall grant such hearing at the earliest opportunity. In no event shall the hearing date be more than 60 days from the date of the hearing request. Following the hearing, a written decision will be rendered and a copy mailed to the permittee by certified letter.

22. Notwithstanding the conditions cited in condition 21 above, if in the opinion of the district commander, emergency circumstances dictate otherwise, the district

commander may summarily revoke the permit.

23. When vegetation modification on these lands is accomplished by chemical means, the program will be in accordance with appropriate Federal, state and local laws, rules and regulations.

24. The resource manager or his/her authorized representative shall be allowed to cross the permittee's property, as necessary to inspect facilities and/or activities under permit.

25. When vegetation modification is allowed, the permittee will delineate the government property line in a clear, but unobtrusive manner approved by the resource manager and in accordance with the project Shoreline Management Plan.

26. If the ownership of a permitted facility is sold or transferred, the permittee or new owner will notify the Resource Manager of the action prior to finalization. The new owner must apply for a Shoreline Use Permit within 14 days or remove the facility and restore the use area within 30 days from the date of ownership transfer.

27. If permitted facilities are removed for storage or extensive maintenance, the resource manager may require all portions of the facility be removed from public property.

APPENDIX D TO § 327.30—PERMIT [RESERVED]

[55 FR 30697, July 27, 1990, as amended at 57 FR 21895, May 26, 1992; 57 FR 29220, July 1, 1992; 63 FR 35828, July 1, 1998]

EFFECTIVE DATE NOTE: The amendment to § 327.30 revising the last sentence of paragraph (k), published at 56 FR 29587, June 28, 1991, was deferred indefinitely. See 56 FR 49706, Oct. 1, 1991. The administrative charges contained in § 327.30, Shoreline Management on Civil Works Projects, published in the July 1, 1991 edition of the Code of Federal Regulations will remain in effect. Any future decisions affecting this regulation will be published in the FEDERAL REGISTER at a later date by the Corps of Engineers, Department of the Army. For the convenience of the user, the rule published on June 28, 1991, at FR page 29587, is set forth as follows:

§ 327.30 Shoreline Management on Civil Works Projects.

* * * * *

(k) * * * The Fee Schedule is published in § 327.31.

§ 327.31 Shoreline management fee schedule.

A charge will be made for Shoreline Use Permits to help defray expenses associated with issuance and administration of the permits. As permits become eligible for renewal after July 1, 1976, a charge of $10 for each new permit and a $5 annual fee for inspection of floating facilities will be made. There will be no annual inspection fee for permits for vegetative modification on Shoreline areas. In all cases the total administrative charge will be collected initially at the time of permit issuance rather than on a piecemeal annual basis.

[56 FR 61163, Dec. 2, 1991; 56 FR 65190, Dec. 16, 1991]

PART 328—REGULATION OF SEAPLANE OPERATIONS AT CIVIL WORKS WATER RESOURCE DEVELOPMENT PROJECTS ADMINISTERED BY THE CHIEF OF ENGINEERS

Sec.

328.1 Purpose.
328.2 Applicability.
328.3 References.
328.4 Policy.
328.5 Guidelines for seaplane use of project waters.
328.6 Procedures.
328.7 Other authorities.

AUTHORITY: Sec. 4 of the Act of Dec. 22, 1944, 58 Stat. 889, as amended, (16 U.S.C. 460d).

SOURCE: 42 FR 59076, Nov. 15, 1977, unless otherwise noted.

§ 328.1 Purpose.

This regulation, in connection with the modification of the present prohibition of seaplane operations by the amendment to § 327.4 of title 36 of the Code of Federal Regulations, is designed to provide uniform policies and criteria for designating Corps projects, or portions thereof, at which seaplane operations are prohibited or restricted; and to continue to protect the integrity and all authorized uses of such projects and the safety of users of such projects. As used in this regulation, *projects* or *Corps projects* means water resources development projects administered by the Chief of Engineers.

§ 328.2 Applicability.

This regulation is applicable to all Field Operating Agencies having Civil Works responsibilities.

§ 328.3 References.

(a) Title 36 CFR, part 327, Rules and Regulations Governing Public Use of Water Resource Development Projects Administered by the Chief of Engineers (38 FR 7552, March 23, 1973).

(b) ER 1105–2–507.

(c) ER 1130–2–400.

(d) ER 1145–2–301.

(e) ER 1145–2–303.

(f) ER 1165–2–400.

(g) ER 405–2–800 Series.

§ 328.4 Policy.

(a) The objective of Corps of Engineers resources management is to maximize public enjoyment and use of the lands, waters, forests, and associated recreational resources, consistent with their aesthetic and biological values. Such management includes efforts to preserve and enhance the environmental amenities that are the source of the recreational value associated with the project and to allow such other new and innovative uses of the projects that are not detrimental thereto.

(b) Seaplane operations at water resource development projects administered by the Chief of Engineers may involve hazards including, but not limited to, conflicting recreational activities, floating debris, and underwater hazards, which may be accentuated by the normal fluctutations of water levels.

(c) Seaplane operations may be prohibited or restricted at such water resource development projects, or portions thereof, for a variety of management reasons. Prohibiting or restricting seaplane operations in certain portions within a project in no way implies that safety hazards to seaplane operations or to other recreation users may not exist in other portions of such project.

(d) The operation of a seaplane at Corps projects is at the risk of the plane's owner, operator, and passenger(s). The responsibility to ascertain whether seaplane operations are permitted, prohibited or restricted at such projects, and portions thereof, is incumbent upon the person(s) contemplating the use of, or using, such waters.

§ 328.5 Guidelines for seaplane use of project waters.

(a) All operations of the aircraft while upon the water shall be in accordance with the marine rules of the road for power boats or vessels.

(b) Seaplanes on project waters and lands in excess of 24 hours shall be securely moored at mooring facilities and at locations permitted by the District Engineer. Seaplanes may be temporarily moored on project waters and lands, except in areas prohibited by the District Engineer, for periods less than 24 hours providing that—

(1) The mooring is safe, secure, and accomplished so as not to damage the rights of the government or members of the public and

(2) The operator remains in the vicinity of the seaplane and reasonably available to relocate the seaplane if necessary.

(c) No commercial operation of seaplanes from project waters will be allowed without written approval of the District Engineer following consultation with and the necessary clearance from the Federal Aviation Administration (FAA) and other appropriate public authorities and affected interests.

(d) Seaplanes may not be operated at Corps projects between sunset and sunrise unless adequate lighting and supervision are available.

(e) Requests for public commercial facilities in support of seaplanes will be handled under normal concession policies.

(f) Permits for floating and nonfloating structures of any kind, in, on, or affecting project waters, under the management of the Resource Manager, including waters under lease, license or other outgrant agreement, shall be handled in accordance with the lakeshore management plan or policy statement for the project involved, § 327.19 of title 36, Code of Federal Regulations and, where required by statute or regulation, section 10 of the River and Harbor Act (approved March 3, 1899) and section 404 of the Federal Water Pollution Control Act of 1972 (Pub. L. 92–500).

(g) Appropriate signs should be employed to inform users of projects, or portions thereof, where seaplane operations are permitted.

§ 328.6 Procedures.

(a) In order to protect the integrity and all authorized uses of Corps projects and the safety of all users of the lake projects, the District Engineer shall:

(1) Examine and investigate each Corps project within his district which a seaplane operator could conceivably attempt to use for seaplane operations, and determine those projects, or portions thereof, in which seaplane operations should be prohibited.

(2) Establish such restrictions on seaplane operations as he deems necessary or desirable in accordance with these regulations for other areas. Seaplane takeoff and landing maneuvers within specified distances of the shoreline, bridges, causeways, water utility crossings, dams, and similar structures should be prohibited.

(3) Prior to concluding any such examination and investigation, consult with the FAA, appropriate State aeronautical agency, lessee or licensee of outgranted lands, the Coast Guard, and state boating law administrators, and use his best efforts to consult with other interested or affected public authorities and private interests for their guidance, particularly for those projects which are regularly used by the public for recreational purposes or are located in the vicinity of actively used airports, air fields, or densely populated areas. News releases, public notice, and congressional liaison should be used. Public hearings are encouraged.

(4) In making his investigation, examination, and determination, consider environmental factors in accordance with the National Environmental Policy Act of 1969 (NEPA), Pub. L. 91–190—particularly should he consider the impact that seaplane operations may have on the safety at the project, aquatic, fish and wildlife, noise levels, recreation, and air and water quality. Prior to concluding such investigation and examination, he shall prepare an environmental impact assessment (EIA) and, if necessary, an environmental impact statement (EIS) assessing the environmental impacts of permitting seaplanes to operate at the projects, or portions thereof, in his district.

(5) Place on Corps maps, brochures and otherwise adequately apprise the public and interested agencies of projects, or portions thereof, where seaplane operations are prohibited or restricted. Each map, brochure, or other notice should clearly indicate that operation of a seaplane at Corps projects is at the risk of the plane's owner, operator, and/or passenger(s).

(6) Notify the FAA by letter of projects, or portions thereof, where seaplane operations are prohibited or restricted. The letter should use the words ''seaplane operations prohibited,'' or ''seaplane operations restricted,'' describe the geographical location of such areas as precisely as possible, describe any restrictions, include a telephone number for FAA to contact the District, and be sent to: Federal Aviation Administration, Area Traffic Service, Flight Services Division (AAT–432), 800 Independence Avenue SW., Washington, DC 20591.

(b) The removal of the present prohibition on seaplane operations will be effective one year from the date of publication of these regulations. The District Engineer should complete the examination, investigation, determination and notification to the FAA of projects, or portions thereof, where seaplane operations are prohibited or restricted, within one year from the date of this regulation. The District Engineer may extend the present prohibition for up to one additional year if he cannot complete his examination, investigation, determination, and notification within one year. In such event, he should notify the FAA by letter and publish other appropriate notices. Any further extension of time will require the approval of the Chief of Engineers.

(c) After he has completed his examination, investigation, determination and notification of the FAA of projects, or portions thereof where seaplane operations will be prohibited or restricted, The District Engineer should periodically reevaluate his determination as additional operational data becomes available. He may modify, delete, or add projects, or portions thereof, where seaplane operations are prohibited or restricted. Except where immediate action is required, he should

consult with appropriate public authorities and private interests for their guidance with regard to such actions. Notification of these actions shall be forwarded to the FAA as indicated in paragraph (a)(6) of this section.

§ 328.7 Other authorities.

Nothing in the preceding provisions bestows authority to deviate from rules and regulations or prescribed standards of the State Aeronautical Agency, Federal Aviation Administration, Coast Guard, or other appropriate Federal, state, or local authority.

PART 330—REGULATION OF LAW ENFORCEMENT SERVICES CONTRACTS AT CIVIL WORKS WATER RESOURCE PROJECTS ADMINISTERED BY THE CHIEF OF ENGINEERS

Sec.

330.1 Purpose.
330.2 Applicability.
330.3 References.
330.4 General.
330.5 Policy.
330.6 Criteria.
330.7 Funding.
330.8 Annual report.

AUTHORITY: Sec. 120 of the Water Resource Development Act of 1976, 90 Stat. 2917.

SOURCE: 42 FR 61986, Dec. 8, 1977, unless otherwise noted.

§ 330.1 Purpose.

This regulation provides policy and guidance for the establishment and management of the contract law enforcement program including preparation of and management of contracts ensuing from this program.

§ 330.2 Applicability.

This regulation is applicable to all field operating agencies having responsibilities for Civil Works water resource development projects.

§ 330.3 References.

(a) Section 4 of the Flood Control Act of 1944, as amended (16 U.S.C. 460d).

(b) Section 234 of the River and Harbor and Flood Control Act of 1970 (Pub. L. 91–611, 84 Stat. 1818).

(c) Section 120 of the Water Resource Development Act of 1976 (Pub. L. 94–587, 90 Stat. 2917).

(d) 36 CFR chapter III.

(e) ER 190–2–3.

(f) ER 190–3–4.

§ 330.4 General.

(a) Section 120(a) of reference § 330.3(c) authorizes the Secretary of the Army, acting through the Chief of Engineers, to contract with States and their political subdivisions for the purpose of obtaining increased law enforcement services at water resource development projects under the jurisdiction of the Secretary of the Army to meet needs during peak visitation periods.

(b) Further, section 120(b) of the Act authorizes a maximum appropriation of up to $6,000,000 per fiscal year for the fiscal years ending 30 September 1978 and 30 September 1979, to carry out section 120(a).

§ 330.5 Policy.

(a) It is the policy of the Corps of Engineers to provide, to the extent of its authorities, a safe and healthful environment for public use of lands and waters at Civil Works water resource development projects. To insure this safe and healthful environment, and to augment the citation authorities granted to the Corps of Engineers by reference § 330.3(b), District Engineers, subject to the authority of the Division Engineers, as set out below, are hereby delegated the authority to contract with States or their political subdivisions to obtain increased law enforcement services at Civil Works water resource development projects. Division Engineers are hereby delegated the authority to approve any minor deviations from this regulation except that any substantial deviations from the policies expressed within this regulation will require the prior approval of the Chief of Engineers or his authorized representative. Any required approval for deviation shall be made prior to the execution of the contract. When fiscal year 1978 and fiscal year 1979 work allowances are issued, instructions will be furnished on reporting requirements and the control of expenditures.

(b) Contracts for law enforcement services, as authorized in § 330.5(a), shall be subject to the terms and conditions as provided for within this regulation and in accordance with standard contracting and accounting procedures applicable to the Corps of Engineers.

(c) This regulation is not intended to diminish or otherwise limit the existing law enforcement responsibilities of the State or local law enforcement agencies.

(d) Contract law enforcement personnel shall not be given Federal citation authority for enforcement of regulations contained in title 36 of the Code of Federal Regulations, Chapter III nor shall they be empowered to enforce such regulations. These regulations shall remain the responsibility of the Corps of Engineers.

(e) Contracts for increased law enforcement shall be for those projects or portions of projects that are operated and maintained by the Corps of Engineers. Law enforcement services will not be provided under this program to those outgrant areas operated and maintained by a non-Federal sponsor.

§ 330.6 Criteria.

(a) In order to provide reimbursement for law enforcement services supplied by a State or local law enforcement agency, a contract must be executed and approved in accordance with this regulation prior to the provisions of such services.

(b) The authorized contract law enforcement program extends only to 30 September 1979. Law enforcement services acquired by contract under this program shall be limited to those increased law enforcement services required to meet the needs of the public during peak visitation periods. Accordingly, the contract period shall not extend beyond the dates of 1 April through 30 September inclusive, and in no event shall the contract be written for more than 120 days within that time period. The contract may provide for an option to renew for a similar, additional period not to exceed 120-day period in Fiscal Year 1979. Any exceptions to this criteria must be approved by the Chief of Engineers or his authorized representative.

(c) Contracts shall be consummated only with those public law enforcement agencies legally empowered to enforce State and local criminal and civil laws within their respective political jurisdictions. In light of this requirement and the authority cited in § 330.3(c), it is recognized that sole source negotiations may necessarily be utilized in the procurement of these services. In negotiating law enforcement contracts with these agencies the District Engineer must determine the reasonableness of the price for the law enforcement services offered under the contract. Such a determination shall be made prior to execution of the contract, in accordance with the applicable Contract Cost Principles and Procedures as set out in ASPR, section 15, part 7, and as subject to the policies contained in this regulation. Such a determination shall be contained in the official contract file and must accompany any requests for deviations from the Division Engineer or Chief of Engineers as provided for in § 330.5(a) of this regulation. Contract law enforcement personnel must meet all the qualifications, including minimal law enforcement training, required by State and local laws and regulations.

(d) The contractor shall provide all personnel, equipment and supplies which are required to provide the increased law enforcement services contracted for by the District Engineer. The Corps of Engineers shall not reimburse the contractor for the purchase of any equipment or supplies desired by the contractor for use under this program. However, the Corps of Engineers shall reimburse the contractor for the reasonable costs incurred by him in the rental or use of such equipment which is allocated to the work performed by him under the contract. Such use shall include:

(1) A depreciation or use allowance for such equipment as determined by the service life evaluation system used by the contractor, and (2) the costs of necessary maintenance, repair, and upkeep of the property which neither adds to the permanent value of the property nor appreciably prolongs its intended life, but keeps it at an efficient operating condition.

(e) Reimbursement for law enforcement services shall be considered only for increased law enforcement services to meet needs during peak visitation periods. Each District Engineer shall evaluate and establish a normal law enforcement service standard for each contract situation and include such standard in the plan of operation to be developed in accordance with § 330.6(h). Each District Engineer shall evaluate the existing law enforcement services now being provided by State or local law enforcement agencies at those water resources projects or recreation areas where it is anticipated that law enforcement service contracts may be executed, and determine the scope including the type and amount, of law enforcement service which exceeds the normal law enforcement standard, and which will become eligible for reimbursement under the contract. Normally, requests by the District Engineer or his authorized representative for emergency or unanticipated law enforcement assistance will be considered nonreimbursable. Increased law enforcement services, eligible for reimbursement under the terms of the contract, shall be those regularly scheduled patrols or surveillance in excess of the normal law enforcement standard presently being provided by the contractor.

(f) An appropriate orientation program will be given by Corps personnel to all contract law enforcement personnel assigned to Corps projects. The purpose of this orientation will be to familiarize the contract law enforcement personnel with the policies and procedures of the Corps of Engineers, and to familiarize Corps personnel with the functions and duties of the State or local law enforcement agency. The Corps of Engineers shall reimburse the contractor for the cost per man hour as set out in § 330.6(h)(4) for attending the orientation program.

(g) The contractor shall be required to keep a record of the services provided to the District under the terms and conditions of the contract in accordance with the criteria established in the plan of operation required in § 330.6(h).

(h) The District Engineer, in cooperation with the Contractor, shall prepare a Plan of Operation for the Provision of law enforcement services as an attachment to the contract. The Plan of Operation shall contain, but not necessarily be limited to, the following information:

(1) Identify, by name and location, the project or projects and specific areas (recreation and others) that require law enforcement services.

(2) Describe the normal law enforcement services to be provided by the Contractor without reimbursement by the Government (see § 330.6(e)). Identify time of day, number of hours-per-day number of days-per-week, and the number of patrols.

(3) Describe the increased law enforcement services to be provided by the Contractor under the contract. Identify the time-of-day, number of hours-per-day, number of days-per-week, number of patrols, manpower per patrol, and effective starting and ending dates.

(4) Identify the cost-per-man-hour for the provision of reimbursable law enforcement services, and identify the costs for utilization and operation, maintenance and repair of such equipment as allocated for use under the contract. (See § 330.6(d).)

(5) The District Engineer and the Contractor should designate specific individuals to issue or receive requests for reimbursable law enforcement services under the contract.

(6) Describe the billing procedures to be utilized for the increased law enforcement services. The Contractor shall provide, at a minimum, the total charges, the number of hours involved, and starting and ending dates of the billing period.

(7) The Contractor shall prepare a Daily Law Enforcement Log (see § 330.6(g) for the law enforcement services rendered as specified in § 330.6(h)(3)). These logs shall be compiled by the Contractor and submitted to the District Engineer or his designated representative on a regular basis throughout the life of the contract. It is intended by this reporting requirement to minimize the paperwork burden on behalf of the Contractor while, at the same time, providing assurance to the Government with an adequate information base on

which to administer the law enforcement services being provided under the contract. Any requirement for additional information to be contained in these reports due to unique or special circumstances encountered in negotiating a Plan of Operation with a particular law enforcement jurisdiction must receive the prior approval of the Division Engineer.

§ 330.7 Funding.

(a) Section 330.3(c) sets forth the maximum authorized funds for law enforcement contracting in FY 1978 and FY 1979. The Division funding levels for FY 1978 are based on information as previously submitted.

(b) The FY 1979 funding request for law enforcement contracting will be submitted as part of the FY 1979 budget submittal.

§ 330.8 Annual report.

(RCS-DAEN-CWO-53) The Division Engineer will submit a consolidated annual report to reach HQDA (DAEN-CWO-R) WASH DC 20314 not later than 30 October. This requirement expires 30 October 1979. The report will contain the following:

(a) Districts reporting.

(b) Number assigned each contract.

(c) Name of projects covered under each contract.

(d) Number of man-hours of increased law enforcement services provided under each contract.

(e) Total contract cost.

(f) Cost per man-hour for each contract.

(g) Corps of Engineers administrative or overhead costs associated with each contract.

(h) Number of arrests and type of offense committed, i.e., assault, burglary, auto theft, etc.

(i) The Division Engineers assessment of the effects of the contract law enforcement program and recommendation.

PART 331—REGULATIONS GOVERNING THE PROTECTION, USE AND MANAGEMENT OF THE FALLS OF THE OHIO NATIONAL WILDLIFE CONSERVATION AREA, KENTUCKY AND INDIANA

Sec.
331.1 Applicability and scope.
331.2 Policy.
331.3 Hunting and trapping.
331.4 Fishing.
331.5 Explosives and fireworks.
331.6 Public property.
331.7 Sanitation.
331.8 Picnicking.
331.9 Camping.
331.10 Swimming.
331.11 Special events.
331.12 Vehicles.
331.13 Vessels.
331.14 Aircraft.
331.15 Fires.
331.16 Interference with government employees.
331.17 Minerals.
331.18 Restrictions.
331.19 Commercial activities.
331.20 Advertisement.
331.21 Unauthorized structures.
331.22 Abandonment of personal property.
331.23 Control of animals.
331.24 Permits.
331.25 Violation of regulations.

AUTHORITY: Pub. L. 97–137.

SOURCE: 48 FR 40720, Sept. 9, 1983, unless otherwise noted.

§ 331.1 Applicability and scope.

(a) The regulations contained in this part apply to those lands and waters within the established boundary of the Falls of the Ohio National Wildlife Conservation Area (WCA). Included in this boundary, which was published in the FEDERAL REGISTER of August 12, 1982, are publicly and privately owned lands, waters and improvements. The Federal Government, acting through the Corps of Engineers, will acquire such rights to privately-owned properties in the WCA as are necessary to carry out the purposes of title II, Pub. L. 97–137. The regulations prescribed herein are for the use, management and protection of the resources of the WCA and all persons entering, using or visiting within the boundaries of the WCA are subject to these regulations. All other applicable Federal, State and local laws and regulations remain in

full force and effect. The District Engineer, US Army Corps of Engineers, exercises non-exclusive jurisdiction over the lands and waters of the WCA and enforces these regulations.

(b) The WCA boundary encompasses an existing hydroelectric generating station and the McAlpine Locks and Dam, operating navigation structures which are part of the authorized Ohio River Navigation System. The continued operation and maintenance of this system take precedence over the purposes of the WCA, except that such operation and maintenance will be consistent with the basic purpose of the WCA as regards prohibition of hunting, vandalism, and dumping of refuse. Management of the WCA to achieve its intended purposes will, to the extent practicable, be accomplished in a manner consistent and compatible with continued generation of electricity and navigation on the Ohio River, including operation and maintenance of the McAlpine Locks and Dam and the Louisville Repair Station and material storage areas located on Shippingport Island.

§ 331.2 Policy.

(a) It is the policy of the Secretary of the Army, acting through the Chief of Engineers, to manage the natural and cultural resources of the WCA in the public interest, providing the public with safe and healthful recreational opportunities while protecting and enhancing these resources.

(b) Unless otherwise indicated herein, the term *District Engineer* shall include the authorized representatives of the District Engineer.

(c) The WCA shall be available to the public without regard to sex, race, color, creed or national origin. No lessee, licensee or concessionaire providing a service to the public shall discriminate against any person because of sex, race, creed, color, or national origin in the conduct of the operations under the lease, license, or concession contract.

§ 331.3 Hunting and trapping.

Unless authorized in writing by the District Engineer:

(a) The hunting, trapping, catching, molesting, killing, or having in possession any wild animal or bird, or taking the eggs of any such bird, is prohibited.

(b) Possession of equipment (including, but not limited to, firearms, ammunition, traps, projectile firing devices including bow and arrow) which could be used for hunting, trapping, or the taking of wildlife, is prohibited.

§ 331.4 Fishing.

Unless otherwise authorized in writing by the District Engineer:

(a) Fishing is only permitted in accordance with the laws and regulations of the State within whose exterior boundaries that portion of the WCA is located, and such laws and regulations which are now or may hereafter be in effect are hereby adopted as part of these regulations.

(b) Fishing by means of the use of drugs, poisons, explosives, bow and arrow or electricity is prohibited.

(c) Commercial fishing and fishing with gill nets, trammel nets, hoop nets, bow and arrow or trot lines is prohibited.

§ 331.5 Explosives and fireworks.

Unless otherwise authorized in writing by the District Engineer.

(a) The possession or use of fireworks is prohibited.

(b) The possession or use of explosives is prohibited.

§ 331.6 Public property.

Unless otherwise authorized in writing by the District Engineer, the destruction, injury, defacement, removal, or any alteration of public property including, but not limited to natural formations, paleontological features, historical and archaeological features and vegetative growth is prohibited. Any such destruction, removal, or alteration of public property shall be in accordance with the conditions of any permission granted.

§ 331.7 Sanitation.

(a) Garbage, trash, rubbish, litter, or any other waste material or waste liquid generated on the WCA shall be removed from the area or deposited in receptacles provided for that purpose. The improper disposal of such wastes within the boundaries of the WCA is prohibited.

(b) The use of refuse containers for the disposal of refuse not generated on the WCA is prohibited.

(c) It is a violation to bring any material onto the WCA for the purpose of disposal.

(d) The discharge or placing of sewage, galley waste, garbage, refuse or pollutants into the WCA waters from any vessel or watercraft is prohibited.

§ 331.8 Picnicking.

(a) Picnicking is permitted only in designated areas.

(b) Picnickers shall remove all personal equipment and clean their sites upon departure.

§ 331.9 Camping.

Camping is not permitted within the WCA.

§ 331.10 Swimming.

Swimming is prohibited unless authorized in writing by the District Engineer.

§ 331.11 Special events.

(a) Special events including, but not limited to, water carnivals, boat regattas, music festivals, dramatic presentations, or other special recreation programs are prohibited unless written permission has been granted by the District Engineer.

(b) The public shall not be charged any fee by the sponsor of such permitted event unless the District Engineer has approved in writing the proposed schedule of fees. The District Engineer shall have authority to revoke permission and require removal of any equipment upon failure of the sponsor to comply with terms and conditions of the permit/permission. Any violation shall constitute a separate violation for each calendar day in which it occurs.

§ 331.12 Vehicles.

(a) The use of a vehicle off roadways is prohibited except as may be authorized by the District Engineer.

(b) Vehicles shall not be parked in violation of any posted restriction, or in such a manner as to endanger any Federal property to include natural features. The owner of any vehicle parked in violation of this section shall be presumed to have parked it, and unless rebutted such presumption will be sufficient to sustain a conviction as provided for in § 331.25.

(c) Vehicles shall be operated in accordance with all posted regulations.

(d) Driving or operating any vehicle in a careless, negligent, or reckless manner, heedlessly or in willful disregard for the safety of other persons, or in such manner as to endanger any property or environmental feature, or without due care or at a speed greater than is reasonable and prudent under prevailing conditions with regard to traffic, weather, road, light and surface conditions, is prohibited.

(e) This section pertains to all vehicles, including, but not limited to, automobiles, trucks, motorcycles, minibikes, trail bikes, snowmobiles, dune buggies, all terrain vehicles, bicycles, trailers, campers, or any other such equipment.

(f) Except as authorized by the District Engineer, no person shall operate any motorized vehicle without a proper and effective exhaust muffler, or with an exhaust muffler cutout open, or in any other manner which renders the exhaust muffler ineffective in muffling the sound of engine exhaust.

§ 331.13 Vessels.

(a) Vessels or other watercraft may be operated in the WCA waters except in prohibited or restricted areas in accordance with posted regulations and applicable Federal, State and local laws.

(b) All vessels when not in actual use shall be removed from the WCA unless securely moored at mooring facilities approved by the District Engineer. The placing of floating or stationary mooring facilities to, or interfering with, a buoy, channel marker, or other navigational aid is prohibited.

(c) The operation of vessels or other watercraft in a careless, negligent, or reckless manner so as to endanger any property (including the operator and/or user(s) of the vessel or watercraft) is prohibited.

§ 331.14 Aircraft.

(a) The operation of aircraft on WCA lands and waters is prohibited, unless

authorized in writing by the District Engineer.

(b) Except in extreme emergencies threatening human life or serious property loss, the air delivery of any person or thing by parachute, helicopter, or other means onto project lands or waters without written permission of the District Engineer is prohibited.

(c) The provisions of this section shall not be applicable to aircraft engaged on official business of the Federal Government or used in emergency rescue in accordance with the directions of the District Engineer.

§ 331.15 Fires.

Open fires are prohibited unless confined to fireplaces, grills, or other facilities designed for this purpose as designated by the District Engineer. Fires shall not be left unattended and must be completely extinguished prior to departure.

§ 331.16 Interference with government employees.

Interference with any Government employee in the conduct of his or her official duties pertaining to the administration of these regulations is prohibited. It is a violation to fail to comply with a lawful order directed by any Government employee or to knowingly give any false, fictitious, or fraudulent report or other information to any government employee in the performance of his or her official duties pertaining to the administration of these regulations.

§ 331.17 Minerals.

All activities in connection with prospecting, exploration, development, mining or other removal or the processing of mineral resources and all uses reasonably incident thereto are prohibited.

§ 331.18 Restrictions.

The District Engineer may establish and post a schedule of visiting hours and/or restrictions on the public use of a portion or portions of the WCA. The District Engineer may close or restrict the use of the WCA or portion of the WCA when necessitated by reason of public health, public safety, security, maintenance, or other reasons in the public interest. Entering or using the project in a manner which is contrary to the schedule of visiting hours, closure or restrictions is prohibited.

§ 331.19 Commercial activities.

Unless otherwise authorized in writing by the District Engineer, the engaging in or solicitation of business or money is prohibited.

§ 331.20 Advertisement.

Unless otherwise authorized in writing by the District Engineer, advertising by the use of billboards, signs, markers, audio devices, or any other means whatsoever including handbills, circulars, and posters is prohibited. Vessels or vehicles with semipermanent or permanently installed signs are exempt if being used for authorized recreational activities or special events and in compliance with all other rules and regulations pertaining to vessels and vehicles.

§ 331.21 Unauthorized structures.

The construction, placing, or continued existence of any structure of any kind under, upon, in, or over WCA lands or waters is prohibited unless a permit, lease, license, or other appropriate written agreement therefor has been issued by the District Engineer. Structures not so authorized are subject to summary removal or impoundment by the District Engineer. The design, construction, placing, existence, or use of structures in violation of the terms of the permit, lease, license, or other written agreement therefor is prohibited.

§ 331.22 Abandonment of personal property.

(a) Personal property of any kind left unattended upon WCA lands or waters for a period of 24 hours shall be considered abandoned and may be impounded and stored at a storage point designated by the District Engineer who may assess a reasonable impoundment fee. Such fee shall be paid before the impounded property is returned to its owner.

(b) If abandoned property is not claimed by its owner within 3 months after the date it is received at the storage point designated by the District

Engineer, it may be disposed of by public or private sale or by other means determined by the District Engineer. Any net proceeds from the sale of property shall be conveyed unto the Treasury of the United States as miscellaneous receipts.

§ 331.23 Control of animals.

(a) No person shall bring or allow horses, cattle, or other livestock in the WCA.

(b) No person shall bring dogs, cats, or other pets into the WCA unless penned, caged, or on a leash under 6 feet in length, or otherwise under physical restraint at all times. Unclaimed or unattended animals are subject to immediate impoundment and removal in accordance with State and local laws.

§ 331.24 Permits.

It shall be a violation of these regulations to refuse to or fail to comply with the terms or conditions of any permit isued by the District Engineer.

§ 331.25 Violation of regulations.

Anyone violating the provisions of this regulation shall be subject to a fine of not more than $500 or imprisonment for not more than 6 months, or both. All persons designated by the Chief of Engineers, U.S. Army Corps of Engineers, for that purpose shall have the authority to issue a citation for the violation of these regulations, requiring the appearance of any person charged with violation to appear before the U.S. Magistrate within whose jurisdiction the violation occurred.

PARTS 332–399 [RESERVED]

CHAPTER IV—AMERICAN BATTLE MONUMENTS COMMISSION

Part		*Page*
400	Employee responsibilities and conduct	37
401	Monuments and memorials	37
402–403	[Reserved]	
404	Procedures and guidelines for compliance with the Freedom of Information Act	39
406	Enforcement of nondiscrimination on the basis of handicap in programs or activities conducted by American Battle Monuments Commission	45
407–499	[Reserved]	

PART 400—EMPLOYEE RESPONSIBILITIES AND CONDUCT

AUTHORITY: 5 U.S.C. 7301; 36 U.S.C. 2103.

§ 400.1 Cross-references to employees' ethical conduct standards, financial disclosure regulations and other conduct rules.

Employees of the American Battle Monuments Commission are subject to the executive branch-wide standards of ethical conduct and financial disclosure regulations at 5 CFR parts 2634 and 2635 as well as the executive branch-wide employee responsibilities and conduct regulations at 5 CFR part 735.

[69 FR 17929, Apr. 6, 2004]

PART 401—MONUMENTS AND MEMORIALS

Sec.
401.1 Purpose.
401.2 Applicability and scope.
401.3 Background.
401.4 Responsibility.
401.5 Control and supervision of materials, design, and building.
401.6 Approval by National Commission of Fine Arts.
401.7 Cooperation with other than government entities.
401.8 Requirement for Commission approval.
401.9 Evaluation criteria.
401.10 Monument Trust Fund Program.
401.11 Demolition criteria.

AUTHORITY: 36 U.S.C 2105; 36 U.S.C. 2106

SOURCE: 70 FR 32490, June 3, 2005, unless otherwise noted.

§ 401.1 Purpose.

This part provides guidance on the execution of the responsibilities given by Congress to the American Battle Monuments Commission (Commission) regarding memorials and monuments commemorating the service of American Armed Forces at locations outside the United States.

§ 401.2 Applicability and scope.

This part applies to all agencies of the United States Government, State and local governments of the United States and all American citizens, and private and public American organizations that have established or plan to establish any permanent memorial commemorating the service of American Armed Forces at a location outside the United States. This chapter does not address temporary monuments, plaques and other elements that deployed American Armed Forces wish to erect at a facility occupied by them outside the United States. Approval of any such temporary monument, plaque or other element is a matter to be determined by the concerned component of the Department of Defense consistent with host nation law and any other constraints applicable to the presence of American Armed Forces at the overseas location.

§ 401.3 Background.

Following World War I many American individuals, organizations and governmental entities sought to create memorials in Europe commemorating the service of American Armed Forces that participated in that war. Frequently such well-intended efforts were undertaken without adequate regard for many issues including host nation approvals, design adequacy, and funding for perpetual maintenance. As a result, in 1923 Congress created the American Battle Monuments Commission to generally oversee all memorials created by Americans or American entities to commemorate the service of American Armed Forces at locations outside the United States.

§ 401.4 Responsibility.

The Commission is responsible for building and maintaining appropriate memorials commemorating the service of American Armed Forces at any place outside the United States where Armed Forces have served since April 6, 1917.

§ 401.5 Control and supervision of materials, design, and building.

The Commission controls the design and prescribes regulations for the building of all memorial monuments and buildings commemorating the service of American Armed Forces that are built in a foreign country or political division of the foreign country that authorizes the Commission to carry out those duties and powers.

§ 401.6 Approval by National Commission of Fine Arts.

A design for a memorial to be constructed at the expense of the United States Government must be approved by the National Commission of Fine Arts before the Commission can accept it.

§ 401.7 Cooperation with other than Government entities.

The Commission has the discretion to cooperate with citizens of the United States, States, municipalities, or associations desiring to build war memorials outside the United States.

§ 401.8 Requirement for Commission approval.

No administrative agency of the United States Government may give assistance to build a memorial unless the plan for the memorial has been approved by the Commission. In deciding whether to approve a memorial request the Commission will apply the criteria set forth in § 401.9.

§ 401.9 Evaluation criteria.

Commission consideration of a request to approve a memorial will include, but not be limited to, evaluation of following criteria:

Criteria	Discussion
(a) How long has it been since the events to be honored took place?	Requests made during or immediately after an event are not generally subject to approval. The Commission will not approve a memorial until at least 10 years after the officially designated end of the event. It should be noted that this is the same period of time made applicable to the establishment of memorials in the District of Columbia and its environs by the Commemorative Works Act.
(b) How will the perpetual maintenance of the memorial be funded?	Available adequate funding or other specific arrangements addressing perpetual care are a prerequisite to any approval.
(c) Has the host nation consented?	Host nation approval is required.
(d) Is an overseas site appropriate for the proposed permanent memorial?	In many circumstances a memorial located within the United States will be more appropriate.
(e) Is the proposed memorial intended to honor an individual or small unit?	Memorials to elements smaller than a division or comparable unit or to an individual will not be approved unless the services of such unit or individual clearly were of such distinguished character as to warrant a separate memorial.
(f) Is the memorial historically accurate?	Representations should be supported by objective authorities.
(g) Is the proposed memorial intended to honor an organizational element of the American Armed Forces rather than soldiers from a geographical area of the United States?	As a general rule, memorials should be erected to organizations rather than to troops from a particular locality of the United States.
(h) Does the contribution of the element to be honored warrant a separate memorial?	The commemoration should normally be through a memorial that would have the affect of honoring all of the American Armed Forces personnel who participated rather than a select segment of the organizational participants.

§ 401.10 Monument Trust Fund Program.

Pursuant to the provisions of 36 U.S.C. 2106(d), the Commission operates a Monument Trust Fund Program (MTFP) in countries where there is a Commission presence. Under the MTFP, the Commission may assume both the sponsor's legal interests in the monument and responsibility for its maintenance. To be accepted in the Monument Trust Fund Program, an organization must develop an acceptable maintenance plan and transfer sufficient monies to the Commission to fully fund the maintenance plan for at least 30 years. to The Commission will put this money into a trust fund of United States Treasury instruments that earn interest. Prior to acceptance into the MTFP, the sponsor must perform any deferred maintenance necessary to bring the monument up to a mutually agreeable standard. At that time, the Commission may assume the sponsoring organization's interest in the property and responsibility for all maintenance and other decisions concerning the monument. Once accepted into the program, the Commission will provide for all necessary maintenance of the monument and charge the cost to the trust fund. to The sponsoring organization or others interested in the monument may add to the trust fund at any time to insure that adequate funds remain available. to The Commission will maintain the monument

for as long a period as the trust fund account permits.

§401.11 Demolition criteria.

As authorized by the provisions of 36 U.S.C. 2106(e), the Commission may take necessary action to demolish any war memorial built outside the United States by a citizen of the United States, a State, a political subdivision of a State, a governmental authority (except a department, agency, or instrumentality of the United States Government), a foreign agency, or a private association and to dispose of the site of the memorial in a way the Commission decides is proper, if—

(a) The appropriate foreign authorities agree to the demolition; and

(b)(1) The sponsor of the memorial consents to the demolition; or

(2) The memorial has fallen into disrepair and a reasonable effort by the Commission has failed—

(i) To persuade the sponsor to maintain the memorial at a standard acceptable to the Commission; or

(ii) To locate the sponsor.

PARTS 402–403 [RESERVED]

PART 404—PROCEDURES AND GUIDELINES FOR COMPLIANCE WITH THE FREEDOM OF INFORMATION ACT

Sec.

404.1 General.
404.2 Authority and functions.
404.3 Organization.
404.4 Access to information.
404.5 Inspection and copying.
404.6 Definitions.
404.7 Fees to be charged—general.
404.8 Fees to be charged—categories of requesters.
404.9 Miscellaneous fee provisions.
404.10 Waiver or reduction of charges.

AUTHORITY: 5 U.S.C. 552.

SOURCE: 68 FR 8826, Feb. 26, 2003, unless otherwise noted.

§404.1 General.

This information is furnished for the guidance of the public and in compliance with the requirements of section 552 of Title 5, United States Code, as amended.

§404.2 Authority and functions.

The general functions of the American Battle Monuments Commission, as provided by statute, 36 U.S.C. Section 2101, *et seq.*, are to build and maintain suitable memorials commemorating the service of American Armed Forces and to maintain permanent American military cemeteries in foreign countries.

§404.3 Organization.

(a) The brief description of the central organization of the American Battle Monuments Commission follows:

(1) The Commission is composed of not more than 11 members appointed by the President.

(2) The day to day operation of the Commission is under the direction of a Secretary appointed by the President.

(3) Principal Officials include the Executive Director, Director of Finance, Director of Procurement and Contracting, Director of Engineering, Maintenance, and Operations and Director of Personnel and Administration.

(4) The Commission also creates temporary offices when tasked with major additional responsibilities not of a permanent nature.

(b) *Locations.* (1) The principal offices of the American Battle Monuments Commission are located at Courthouse Plaza II, Suite 500, 2300 Clarendon Boulevard, Arlington, VA 22201. Persons desiring to visit offices or employees of the American Battle Monuments Commission should write or telephone ahead (703–696–6897 or 703–696–6895) to make an appointment.

(2) Field offices are located in Paris, France; Rome, Italy; Manila, Republic of the Philippines; the Republic of Panama; and Mexico City, Mexico.

§404.4 Access to information.

(a) The American Battle Monuments Commission makes available information pertaining to Commission matters within the scope of 5 U.S.C. 552(a)(2) by publishing them electronically at the ABMC home page at *http://www.abmc.gov*.

(b) The ABMC FOIA Officer is responsible for acting on all initial requests. Individuals wishing to file a request under the Freedom of Information Act

(FOIA) should address their request in writing to the FOIA Officer, American Battle Monuments Commission, Courthouse Plaza II, Suite 500, 2300 Clarendon Boulevard, Arlington, VA 22201 (telephone 703–696–6897 or 703–696–6895). Requests for information shall be as specific as possible.

(c) Upon receipt of any request for information or records, the FOIA Officer will determine within 20 days (excepting Saturdays, Sundays and legal public holidays) after the receipt of such request whether it is appropriate to grant the request and will immediately provide written notification to the person making the request. If the request is denied, the written notification to the person making the request shall include the names of the individuals who participated in the determination, the reasons for the denial, and a notice that an appeal may be lodged within the American Battle Monuments Commission. (Receipt of a request as used herein means the date the request is received in the office of the FOIA Officer.)

(d) *Expedited processing.* (1) Requests and appeals will be taken out of order and given expedited treatment whenever it is determined that they involve:

(i) Circumstances in which the lack of expedited treatment could reasonably be expected to pose an imminent threat to the life or physical safety of an individual;

(ii) An urgency to inform the public about an actual or alleged federal government activity, if made by a person primarily engaged in disseminating information;

(iii) The loss of substantial due process rights; or

(iv) A matter of widespread and exceptional media interest in which there exist possible questions about the government's integrity which effect public confidence.

(2) A request for expedited processing may be made at the time of the initial request for records or at any later time.

(3) A requester who seeks expedited processing must submit a statement, certified to be true and correct to the best of that person's knowledge and belief, explaining in detail the basis for requesting expedited processing. For example, a requester within the category described in paragraph (d)(1)(ii) of this section, if not a full-time member of the news media, must establish that he or she is a person whose main professional activity or occupation is information dissemination, though it need not be his or her sole occupation. A requester within the category (d)(1)(ii) of this section also must establish a particular urgency to inform the public about the government activity involved in the request, beyond the public's right to know about government activity generally. The formality of certification may be waived as a matter of administrative discretion.

(4) Within 10 days of its receipt of a request for expedited processing, ABMC will decide whether to grant it and will notify the requester of the decision. If a request for expedited treatment is granted, the request will be given priority and will be processed as soon as practicable. If a request for expedited processing is denied, any appeal of that decision will be acted on expeditiously.

(e) Appeals shall be set forth in writing within 30 days of receipt of a denial and addressed to the FOIA Officer at the address specified in paragraph (b) of this section. The appeal shall include a statement explaining the basis for the appeal. Determinations of appeals will be set forth in writing and signed by the Executive Director, or his designee, within 20 days (excepting Saturdays, Sundays, and legal public holidays). If, on appeal, the denial is in whole or in part upheld, the written determination will also contain a notification of the provisions for judicial review and the names of the persons who participated in the determination.

(f) In unusual circumstances, the time limits prescribed in paragraphs (c) and (e) of this section may be extended for not more than 10 days (excepting Saturdays, Sundays, or legal public holidays). Extensions may be granted by the FOIA Officer. The extension period may be split between the initial request and the appeal but in no instance may the total period exceed 10 working days. Extensions will be by written notice to the persons making the request and will set forth the reasons for the extension and the date the determination is expected.

(g) With respect to a request for which a written notice under paragraph (f) of this section extends the time limits prescribed under paragraph (c) of this section, the agency shall notify the person making the request if the request cannot be processed within the time limit specified in paragraph (f) of this section and shall provide the person an opportunity to limit the scope of the request so that it may be processed within that time limit or an opportunity to arrange with the agency an alternative time frame for processing the request or a modified request. Refusal by the person to reasonably modify the request or arrange such an alternative time frame shall be considered as a factor in determining whether exceptional circumstances exist for purposes of 5 U.S.C. 552(a)(6)(C). When ABMC reasonably believes that a requester, or a group of requestors acting in concert, has submitted requests that constitute a single request, involving clearly related matters, ABMC may aggregate those requests for purposes of this paragraph. One element to be considered in determining whether a belief would be reasonable is the time period over which the requests have occurred.

(h) As used herein, but only to the extent reasonably necessary to the proper processing of the particular request, the term unusual circumstances means:

(1) The need to search for and collect the requested records from establishments that are separated from the office processing the request;

(2) The need to search for, collect, and appropriately examine a voluminous amount of separate and distinct records which are demanded in a single request; or

(3) The need for consultation, which shall be conducted with all practicable speed, with another agency having a substantial interest in the determination of the request or among two or more components of the agency which have a substantial subject matter interest therein.

§404.5 Inspection and copying.

When a request for information has been approved pursuant to §404.4, the person making the request may make an appointment to inspect or copy the materials requested during regular business hours by writing or telephoning the FOIA Officer at the address or telephone number listed in §404.4(b). Such materials may be copied and reasonable facilities will be made available for that purpose. Copies of individual pages of such materials will be made available at the price per page specified in §404.7(d); however, the right is reserved to limit to a reasonable quantity the copies of such materials which may be made available in this manner when copies also are offered for sale by the Superintendent of Documents.

§404.6 Definitions.

For the purpose of these regulations:

(a) All the terms defined in the Freedom of Information Act apply.

(b) A *statute specifically providing for setting the level of fees for particular types of records* (5 U.S.C. 552(a)(4)(A)(vi)) means any statute that specifically requires a government agency, such as the Government Printing Office (GPO) or the National Technical Information Service (NTIS), to set the level of fees for particular types of records, in order to:

(1) Serve both the general public and private sector organizations by conveniently making available government information;

(2) Ensure that groups and individuals pay the cost of publications and other services that are for their special use so that these costs are not borne by the general taxpaying public;

(3) Operate an information dissemination activity on a self-sustaining basis to the maximum extent possible; or

(4) Return revenue to the Treasury for defraying, wholly or in part, appropriated funds used to pay the cost of disseminating government information. Statutes, such as the User Fee Statute, which only provide a general discussion of fees without explicitly requiring that an agency set and collect fees for particular documents do not supersede the Freedom of Information Act under section (a)(4)(A)(vi) of that statute.

(c) The term *direct costs* means those expenditures that ABMC actually incurs in searching for and duplicating (and in the case of commercial requesters, reviewing) documents to respond to a FOIA request. Direct costs include, for example, the salary of the employee performing work (the basic rate of pay for the employee plus 16 percent of that rate to cover benefits) and the cost of operating duplicating machinery. Not included in direct costs are overhead expenses such as costs of space, and heating or lighting the facility in which the records are stored.

(d) The term *search* means the process of looking for and retrieving records or information responsive to a request. It includes page-by-page or line-by-line identification of information within records and also includes reasonable efforts to locate and retrieve information from records maintained in electronic form or format. ABMC employees should ensure that searching for material is done in the most efficient and least expensive manner so as to minimize costs for both the agency and the requester. For example, employees should not engage in line-by-line search when merely duplicating an entire document would prove the less expensive and quicker method of complying with a request. Search should be distinguished, moreover, from review of material in order to determine whether the material is exempt from disclosure (see paragraph (f) of this section).

(e) The term *duplication* means the making of a copy of a document, or of the information contained in it, necessary to respond to a FOIA request. Such copies can take the form of paper, microform, audio-visual materials, or electronic records (e.g., magnetic tape or disk), among others. The requester's specified preference of form or format of disclosure will be honored if the record is readily reproducible in that format.

(f) The term *review* refers to the process of examining documents located in response to a request that is for a commercial use (*see* paragraph (g) of this section) to determine whether any portion of any document located is permitted to be withheld. It also includes processing any documents for disclosure, e.g., doing all that is necessary to excise them and otherwise prepare them for release. Review does not include time spent resolving general legal or policy issues regarding the application of exemptions.

(g) The term *commercial use request* refers to a request from or on behalf of one who seeks information for a use or purpose that furthers the commercial, trade, or profit interests of the requester or the person on whose behalf the request is made. In determining whether a requester properly belongs in this category, ABMC must determine the use to which a requester will put the documents requested. Moreover, where an ABMC employee has reasonable cause to doubt the use to which a requester will put the records sought, or where that use is not clear from the request itself, the employee should seek additional clarification before assigning the request to a specific category.

(h) The term *educational institution* refers to a preschool, a public or private elementary or secondary school, an institution of graduate higher education, an institution of undergraduate higher education, an institution of professional education, or an institution of vocational education, that operates a program or programs of scholarly research.

(i) The term *non-commercial scientific institution* refers to an institution that is not operated on a commercial basis (as that term is referenced in paragraph (g) of this section), and that is operated solely for the purpose of conducting scientific research the results of which are not intended to promote any particular product or industry.

(j) The term *representative of the news media* refers to any person actively gathering news for an entity that is organized and operated to publish or broadcast news to the public. The term news means information that is about current events or that would be of current interest to the public. Examples of news media entities include television or radio stations broadcasting to the public at large, and publishers of periodicals (but only in those instances when they can qualify as disseminators of news) who make their products available for purchase or subscription

by the general public. These examples are not intended to be all-inclusive. Moreover, as traditional methods of news delivery evolve (e.g., electronic dissemination of newspapers through telecommunications services), such alternative media would be included in this category. In the case of freelance journalists, they may be regarded as working for a news organization if they can demonstrate a solid basis for expecting publication through that organization, even though not actually employed by it. A publication contract would be the clearest proof, but ABMC may also look to the past publication record of a requester in making this determination.

§404.7 Fees to be charged—general.

ABMC shall charge fees that recoup the full allowable direct costs it incurs. Moreover, it shall use the most efficient and least costly methods to comply with requests for documents made under the FOIA. When documents that would be responsive to a request are maintained for distribution by agencies operating statutory-based fee schedule programs (see definition in §404.6(b)), such as the NTIS, ABMC should inform requesters of the steps necessary to obtain records from those sources.

(a) *Manual searches for records.* ABMC will charge at the salary rate(s) (*i.e.*, basic pay plus 16 percent) of the employee(s) making the search.

(b) *Computer searches for records.* ABMC will charge at the actual direct cost of providing the service. This will include the cost of operating the central processing unit (CPU) for that portion of operating time that is directly attributable to searching for records responsive to a FOIA request and operator/programmer salary apportionable to the search.

(c) *Review of records.* Only requesters who are seeking documents for commercial use may be charged for time spent reviewing records to determine whether they are exempt from mandatory disclosure. Charges may be assessed only for the initial review; *i.e.*, the review undertaken the first time ABMC analyzes the applicability of a specific exemption to a particular record or portion of a record. Records or portions of records withheld in full under an exemption that is subsequently determined not to apply may be reviewed again to determine the applicability of other exemptions not previously considered. The costs for such a subsequent review is assessable.

(d) *Duplication of records.* Records will be duplicated at a rate of $.15 per page. For copies prepared by computer, such as tapes or printouts, ABMC shall charge the actual cost, including operator time, of production of the tape or printout. For other methods of reproduction or duplication, ABMC will charge the actual direct costs of producing the document(s). If ABMC estimates that duplication charges are likely to exceed $25, it shall notify the requester of the estimated amount of fees, unless the requester has indicated in advance his willingness to pay fees as high as those anticipated. Such a notice shall offer a requester the opportunity to confer with agency personnel with the object of reformulating the request to meet his or her needs at a lower cost.

(e) *Other charges.* When it elects to charge them, ABMC will recover the full costs of providing services such as:

(1) Certifying that records are true copies;

(2) Sending records by special methods such as express mail.

(3) Eight by ten inch black and white photographs—$3.75

(4) Eight by ten inch color photographs—$5.00

(5) $1.50 per publication

(6) Video Purchase: The Price of Freedom—$13.00

(f) Remittances shall be in the form either of a personal check or bank draft drawn on a bank in the United States, or a postal money order. Remittances shall be made payable to the order of the Treasury of the United States and mailed to the FOIA Officer, American Battle Monuments Commission, Courthouse Plaza II, Suite 500, 2300 Clarendon Blvd., Arlington, Virginia 22201

(g) *A receipt for fees paid will be given upon request.* Refund of fees paid for services actually rendered will not be made.

(h) *Restrictions on assessing fees.* With the exception of requesters seeking documents for a commercial use,

ABMC will provide the first 100 pages of duplication and the first 2 hours of search time without charge. Moreover, ABMC will not charge fees to any requester, including commercial use requesters, if the cost of collecting a fee would be equal to or greater than the fee itself.

(1) The elements to be considered in determining the cost of collecting a fee are the administrative costs of receiving and recording a requester's remittance, and processing the fee for deposit in the Treasury Department's special account.

(2) For purposes of these restrictions on assessment of fees, the word *pages* refers to paper copies of 8½ × 11 or 11 × 14. Thus, requesters are not entitled to 100 microfiche or 100 computer disks, for example. A microfiche containing the equivalent of 100 pages or 100 pages of computer printout, does meet the terms of the restriction.

(3) Similarly, the term *search time* in this context has as its basis, manual search. To apply this term to searches made by computer, ABMC will determine the hourly cost of operating the central processing unit and the operator's hourly salary plus 16 percent. When the cost of search (including the operator time and the cost of operating the computer to process a request) equals the equivalent dollar amount of two hours of the salary of the person performing the search, *i.e.*, the operator, ABMC will begin assessing charges for computer search.

§ 404.8 Fees to be charged—categories of requesters.

There are four categories of FOIA requesters: commercial use requesters; educational and noncommercial scientific institutions; representatives of the news media; and all other requesters. The specific levels of fees for each of these categories:

(a) *Commercial use requesters.* When ABMC receives a request for documents for commercial use, it will assess charges that recover the full direct costs of searching for, reviewing for release, and duplicating the record sought. Requesters must reasonably describe the records sought. Commercial use requesters are not entitled to 2 hours of free search time nor 100 free pages of reproduction of documents. ABMC may recover the cost of searching for and reviewing records even if there is ultimately no disclosure of records (*see* paragraph (b) of this section).

(b) *Educational and noncommercial scientific institution requesters.* ABMC shall provide documents to requesters in this category for the cost of reproduction alone, excluding charges for the first 100 pages. To be eligible for inclusion in this category, requesters must show that the request is being made as authorized by and under the auspices of a qualifying institution and that the records are not sought for a commercial use, but are sought in furtherance of scholarly (if the request is from an educational institution) or scientific (if the request is from a non-commercial scientific institution) research. Requesters must reasonably describe the records sought.

(c) *Requesters who are representatives of the news media.* ABMC shall provide documents to requesters in this category when serving the news dissemination function for the cost of reproduction alone, excluding charges for the first 100 pages. To be eligible for inclusion in this category, a requester must meet the criteria in § 404.4(j), and his or her request must not be made for a commercial use. In reference to this class of requester, a request for records supporting the news dissemination function of the requester shall not be considered to be a request that is for a commercial use. Requesters must reasonably describe the records sought.

(d) *All other requesters.* ABMC shall charge requesters who do not fit into any of the categories above fees that recover the full reasonable direct cost of searching for and reproducing records that are responsive to the request, except that the first 100 pages of reproduction and the first 2 hours of search time shall be furnished without charge. Moreover, requests for records about the requesters filed in ABMC's systems of records will continue to be treated under the fee provisions of the Privacy Act of 1974 which permit fees only for reproduction. Requesters must reasonably describe the records sought.

§ 404.9 Miscellaneous fee provisions.

(a) *Charging interest—notice and rate.* ABMC may begin assessing interest charges on an unpaid bill starting on the 31st day following the day on which the billing was sent. The fact that the fee has been received by ABMC within the 30-day grace period, even if not processed, will suffice to stay the accrual of interest. Interest will be at the rate prescribed in section 3717 of Title 31 of the United States Code and will accrue from the date of the billing.

(b) *Charges for unsuccessful search.* ABMC may assess charges for time spent searching, even if it fails to locate the records or if records located are determined to be exempt from disclosure. If ABMC estimates that search charges are likely to exceed $25, it shall notify the requester of the estimated amount of fees, unless the requester has indicated in advance his willingness to pay fees as high as those anticipated. Such a notice shall offer the requester the opportunity to confer with agency personnel with the object of reformulating the request to meet his or her needs at a lower cost.

(c) *Aggregating requests.* A requester may not file multiple requests at the same time, each seeking portions of a document or documents, solely in order to avoid payment of fees. When ABMC reasonably believes that a requester, or a group of requestors acting in concert, has submitted requests that constitute a single request, involving clearly related matters, ABMC may aggregate those requests and charge accordingly. One element to be considered in determining whether a belief would be reasonable is the time period over which the requests have occurred.

(d) *Advance payments.* ABMC may not require a requester to make an advance payment, *i.e.*, payment before work is commenced or continued on a request, unless:

(1) ABMC estimates or determines that allowable charges that a requester may be required to pay are likely to exceed $250. Then, ABMC will notify the requester of the likely cost and obtain satisfactory assurance of full payment where the requester has a history of prompt payment of FOIA fees, or require an advance payment of an amount up to the full estimated charges in the case of requesters with no history of payment; or

(2) A requester has previously failed to pay a fee charged in a timely fashion (*i.e.*, within 30 days of the date of the billing). Then, ABMC may require the requester to pay the full amount owed plus any applicable interest as provided above or demonstrate that he or she has, in fact, paid the fee, and to make an advance payment of the full amount of the estimated fee before the agency begins to process a new request or a pending request from that requester.

(3) When ABMC acts under paragraph (d)(1) or (2) of this section, the administrative time limits prescribed in the FOIA, 5 U.S.C. 552(a)(6) (*i.e.*, 20 working days from receipt of initial requests and 20 working days from receipt of appeals from initial denial, plus permissible extensions of these time limits), will begin only after ABMC has received fee payments described in paragraphs (d)(1) and (2) of this section. Effect of the Debt Collection Act of 1982 (Pub. L. 97–365). ABMC should comply with provisions of the Debt Collection Act, including disclosure to consumer reporting agencies and use of collection agencies, where appropriate, to encourage repayment.

§ 404.10 Waiver or reduction of charges.

Fees otherwise chargeable in connection with a request for disclosure of a record shall be waived or reduced where it is determined that disclosure is in the public interest because it is likely to contribute significantly to public understanding of the operations or activities of the Government and is not primarily in the commercial interest of the requester.

PART 406—ENFORCEMENT OF NONDISCRIMINATION ON THE BASIS OF HANDICAP IN PROGRAMS OR ACTIVITIES CONDUCTED BY AMERICAN BATTLE MONUMENTS COMMISSION

Sec.

406.101 Purpose.
406.102 Application.
406.103 Definitions.
406.104–406.109 [Reserved]
406.110 Self-evaluation.

406.111 Notice.
406.112–406.129 [Reserved]
406.130 General prohibitions against discrimination.
406.131–406.139 [Reserved]
406.140 Employment.
406.141–406.148 [Reserved]
406.149 Program accessibility: Discrimination prohibited.
406.150 Program accessibility: Existing facilities.
406.151 Program accessibility: New construction and alterations.
406.152–406.159 [Reserved]
406.160 Communications.
406.161–406.169 [Reserved]
406.170 Compliance procedures.
406.171–406.999 [Reserved]

AUTHORITY: 29 U.S.C. 794.

SOURCE: 51 FR 4577, Feb. 5, 1986, unless otherwise noted.

§ 406.101 Purpose.

This part effectuates section 119 of the Rehabilitation, Comprehensive Services, and Developmental Disabilities Amendments of 1978, which amended section 504 of the Rehabilitation Act of 1973 to prohibit discrimination on the basis of handicap in programs or activities conducted by Executive agencies or the United States Postal Service.

§ 406.102 Application.

This part applies to all programs or activities conducted by the agency.

§ 406.103 Definitions.

For purposes of this part, the term—

Assistant Attorney General means the Assistant Attorney General, Civil Rights Division, United States Department of Justice.

Auxiliary aids means services or devices that enable persons with impaired sensory, manual, or speaking skills to have an equal opportunity to participate in, and enjoy the benefits of, programs or activities conducted by the agency. For example, auxiliary aids useful for persons with impaired vision include readers, Brailled materials, audio recordings, telecommunications devices and other similar services and devices. Auxiliary aids useful for persons with impaired hearing include telephone handset amplifiers, telephones compatible with hearing aids, telecommunication devices for deaf persons (TDD's), interpreters, notetakers, written materials, and other similar services and devices.

Complete complaint means a written statement that contains the complainant's name and address and describes the agency's alleged discriminatory action in sufficient detail to inform the agency of the nature and date of the alleged violation of section 504. It shall be signed by the complainant or by someone authorized to do so on his or her behalf. Complaints filed on behalf of classes or third parties shall describe or identify (by name, if possible) the alleged victims of discrimination.

Facility means all or any portion of buildings, structures, equipment, roads, walks, parking lots, rolling stock or other conveyances, or other real or personal property.

Handicapped person means any person who has a physical or mental impairment that substantially limits one or more major life activities, has a record of such an impairment, or is regarded as having such an impairment.

As used in this definition, the phrase:

(1) *Physical or mental impairment* includes—

(i) Any physiological disorder or condition, cosmetic disfigurement, or anatomical loss affecting one of more of the following body systems: Neurological; musculoskeletal; special sense organs; respiratory, including speech organs; cardiovascular; reproductive; digestive; genitourinary; hemic and lymphatic; skin; and endocrine; or

(ii) Any mental or psychological disorder, such as mental retardation, organic brain syndrome, emotional or mental illness, and specific learning disabilities. The term *physical or mental impairment* includes, but is not limited to, such diseases and conditions as orthopedic, visual, speech, and hearing impairments, cerebral palsy, epilepsy, muscular dystrophy, multiple sclerosis, cancer, heart disease, diabetes, mental retardation, emotional illness, and drug addition and alcholism.

(2) *Major life activities* includes functions such as caring for one's self, performing manual tasks, walking, seeing, hearing, speaking, breathing, learning, and working.

(3) *Has a record of such an impairment* means has a history of, or has been misclassified as having, a mental or

physical impairment that substantially limits one or more major life activities.

(4) *Is regarded as having an impairment* means—

(i) Has a physical or mental impairment that does not substantially limit major life activities but is treated by the agency as constituting such a limitation;

(ii) Has a physical or mental impairment that substantially limits major life activities only as a result of the attitudes of others toward such impairment; or

(iii) Has none of the impairments defined in subparagraph (1) of this definition but is treated by the agency as having such an impairment.

Qualified handicapped person means—

(1) With respect to any agency program or activity under which a person is required to perform services or to achieve a level of accomplishment, a handicapped person who meets the essential eligibility requirements and who can achieve the purpose of the program or activity without modifications in the program or activity that the agency can demonstrate would result in a fundamental alteration in its nature; or

(2) With respect to any other program or activity, a handicapped person who meets the essential eligibility requirements for participation in, or receipt of benefits from, that program or activity.

(3) *Qualified handicapped person* is defined for purposes of employment in 29 CFR 1613.702(f), which is made applicable to this part by §406.140.

Section 504 means section 504 of the Rehabilitation Act of 1973 (Pub. L. 93–112, 87 Stat. 394 (29 U.S.C. 794)), as amended by the Rehabilitation Act Amendments of 1974 (Pub. L. 93–516, 88 Stat. 1617), and the Rehabilitation, Comprehensive Services, and Developmental Disabilities Amendments of 1978 (Pub. L. 95–602, 92 Stat. 2955). As used in this part, section 504 applies only to programs or activities conducted by Executive agencies and not to federally assisted programs.

[51 FR 4577, Feb. 5, 1986; 51 FR 7543, Mar. 5, 1986]

§§ 406.104–406.109 [Reserved]

§ 406.110 Self-evaluation.

(a) The agency shall, by April 9, 1987, evaluate its current policies and practices, and the effects thereof, that do not or may not meet the requirements of this part, and, to the extent modification of any such policies and practices is required, the agency shall proceed to make the necessary modifications.

(b) The agency shall provide an opportunity to interested persons, including handicapped persons or organizations representing handicapped persons, to participate in the self-evaluation process by submitting comments (both oral and written).

(c) The agency shall, until three years following the completion of the self-evaluation, maintain on file and make available for public inspections:

(1) A description of areas examined and any problems identified, and

(2) A description of any modifications made.

§ 406.111 Notice.

The agency shall make available to employees, applicants, participants, beneficiaries, and other interested persons such information regarding the provisions of this part and its applicability to the programs or activities conducted by the agency, and make such information available to them in such manner as the head of the agency finds necessary to apprise such persons of the protections against discrimination assured them by section 504 and this regulation.

§§ 406.112–406.129 [Reserved]

§ 406.130 General prohibitions against discrimination.

(a) No qualified handicapped person shall, on the basis of handicap, be excluded from participation in, be denied the benefits of, or otherwise be subjected to discrimination under any program or activity conducted by the agency.

(b)(1) The agency, in providing any aid, benefit, or service, may not, directly or through contractual, licensing, or other arrangements, on the basis of handicap—

(i) Deny a qualified handicapped person the opportunity to participate in or benefit from the aid, benefit, or service;

(ii) Afford a qualfied handicapped person an opportunity to participate in or benefit from the aid, benefit, or service that is not equal to that afforded others;

(iii) Provide a qualified handicapped person with an aid, benefit, or service that is not as effective in affording equal opportunity to obtain the same result, to gain the same benefit, or to reach the same level of achievement as that provided to others;

(iv) Provide different or separate aid, benefits, or services to handicapped persons or to any class of handicapped persons than is provided to others unless such action is necessary to provide qualified handicapped persons with aid, benefits, or services that are as effective as those provided to others;

(v) Deny a qualified handicapped person the opportunity to participate as a member of planning or advisory boards; or

(vi) Otherwise limit a qualified handicapped person in the enjoyment of any right, privilege, advantage, or opportunity enjoyed by others receiving the aid, benefit, or service.

(2) The agency may not deny a qualified handicapped person the opportunity to participate in programs or activities that are not separate or different, despite the existence of permissibly separate or different programs or activities.

(3) The agency may not, directly or through contractual or other arrangements, utilize criteria or methods of administration the purpose or effect of which would—

(i) Subject qualified handicapped persons to discrimination on the basis of handicap; or

(ii) Defeat or substantially impair accomplishment of the objectives of a program or activity with respect to handicapped persons.

(4) The agency may not, in determining the site or location of a facility, make selections the purpose or effect of which would—

(i) Exclude handicapped persons from, deny them the benefits of, or otherwise subject them to discrimination under any program or activity conducted by the agency; or

(ii) Defeat or substantially impair the accomplishment of the objectives of a program or activity with respect to handicapped persons.

(5) The agency, in the selection of procurement contractors, may not use criteria that subject qualified handicapped persons to discrimination on the basis of handicap.

(c) The exclusion of nonhandicapped persons from the benefits of a program limited by Federal statute or Executive order to handicapped persons or the exclusion of a specific class of handicapped persons from a program limited by Federal statute or Executive order to a different class of handicapped persons is not prohibited by this part.

(d) The agency shall administer programs and activities in the most integrated setting appropriate to the needs of qualified handicapped persons.

§§ 406.131–406.139 [Reserved]

§ 406.140 Employment.

No qualified handicapped person shall, on the basis of handicap, be subjected to discrimination in employment under any program or activity conducted by the agency. The definitions, requirements, and procedures of section 501 of the Rehabilitation Act of 1973 (29 U.S.C. 791), as established by the Equal Employment Opportunity Commission in 29 CFR part 1613, shall apply to employment in federally conducted programs or activities.

§§ 406.141–406.148 [Reserved]

§ 406.149 Program accessibility: Discrimination prohibited.

Except as otherwise provided in § 406.150, no qualified handicapped person shall, because the agency's facilities are inaccessible to or unusable by handicapped persons, be denied the benefits of, be excluded from participation in, or otherwise be subjected to discrimination under any program or activity conducted by the agency.

§ 406.150 Program accessibility: Existing facilities.

(a) *General.* The agency shall operate each program or activity so that the

program or activity, when viewed in its entirety, is readily accessible to and usable by handicapped persons. This paragraph does not—

(1) Necessarily require the agency to make each of its existing facilities accessible to and usable by handicapped persons; or

(2) Require the agency to take any action that it can demonstrate would result in a fundamental alteration in the nature of a program or activity or in undue financial and administrative burdens. In those circumstances where agency personnel believe that the proposed action would fundamentally alter the program or activity or would result in undue financial and administrative burdens, the agency has the burden of proving that compliance with §406.150(a) would result in such alteration or burdens. The decision that compliance would result in such alteration or burdens must be made by the agency head or his or her designee after considering all agency resources available for use in the funding and operation of the conducted program or activity, and must be accompanied by a written statement of the reasons for reaching that conclusion. If an action would result in such an alteration or such burdens, the agency shall take any other action that would not result in such an alteration or such burdens but would nevertheless ensure that handicapped persons receive the benefits and services of the program or activity.

(b) *Methods.* The agency may comply with the requirements of this section through such means as redesign of equipment, reassignment of services to accessible buildings, assignment of aides to beneficiaries, home visits, delivery of services at alternate accessible sites, alteration of existing facilities and construction of new facilities, use of accessible rolling stock, or any other methods that result in making its programs or activities readily accessible to and usable by handicapped persons. The agency is nor required to make structural changes in existing facilities where other methods are effective in achieving compliance with this section. The agency, in making alterations to existing buildings, shall meet accessibility requirements to the extent compelled by the Architectural Barriers Act of 1968, as amended (42 U.S.C. 4151–4157), and any regulations implementing it. In choosing among available methods for meeting the requirements of this section, the agency shall give priority to those methods that offer programs and activities to qualified handicapped persons in the most integrated setting appropriate.

(c) *Time period for compliance.* The agency shall comply with the obligations established under this section by June 6, 1986, except that where structural changes in facilities are undertaken, such changes shall be made by April 7, 1989, but in any event as expeditiously as possible.

(d) *Transition plan.* In the event that structural changes to facilities will be undertaken to achieve program accessibility, the agency shall develop, by October 7, 1986, a transition plan setting forth the steps necessary to complete such changes. The agency shall provide an opportunity to interested persons, including handicapped persons or organizations representing handicapped persons, to participate in the development of the transition plan by submitting comments (both oral and written). A copy of the transition plan shall be made available for public inspection. The plan shall, at a minimum—

(1) Identify physical obstacles in the agency's facilities that limit the accessibility of its programs or activities to handicapped persons;

(2) Describe in detail the methods that will be used to make the facilities accessible;

(3) Specify the schedule for taking the steps necessary to achieve compliance with this section and, if the time period of the transition plan is longer than one year, identify steps that will be taken during each year of the transition period; and

(4) Indicate the official responsible for implementation of the plan.

[51 FR 4577, Feb. 5, 1986; 51 FR 7543, Mar. 5, 1986]

§406.151 Program accessibility: New construction and alterations.

Each building or part of a building that is constructed or altered by, on behalf of, or for the use of the agency

shall be designed, constructed, or altered so as to be readily accessible to and usable by handicapped persons. The definitions, requirements, and standards of the Architectural Barriers Act (42 U.S.C. 4151–4157), as established in 41 CFR 101–19.600 to 101–19.607, apply to buildings covered by this section.

§§ 406.152–406.159 [Reserved]

§ 406.160 Communications.

(a) The agency shall take appropriate steps to ensure effective communication with applicants, participants, personnel of other Federal entities, and members of the public.

(1) The agency shall furnish appropriate auxiliary aids where necessary to afford a handicapped person an equal opportunity to participate in, and enjoy the benefits of, a program or activity conducted by the agency.

(i) In determining what type of auxiliary aid is necessary, the agency shall give primary consideration to the requests of the handicapped person.

(ii) The agency need not provide individually prescribed devices, readers for personal use or study, or other devices of a personal nature.

(2) Where the agency communicates with applicants and beneficiaries by telephone, telecommunication devices for deaf persons (TDD's) or equally effective telecommunication systems shall be used.

(b) The agency shall ensure that interested persons, including persons with impaired vision or hearing, can obtain information as to the existence and location of accessible services, activities, and facilities.

(c) The agency shall provide signage at a primary entrance to each of its inaccessible facilities, directing users to a location at which they can obtain information about accessible facilities. The international symbol for accessibility shall be used at each primary entrance of an accessible facility.

(d) This section does not require the agency to take any action that it can demonstrate would result in a fundamental alteration in the nature of a program or activity or in undue financial and administrative burdens. In those circumstances where agency personnel believe that the proposed action would fundamentally alter the program or activity or would result in undue financial and administrative burdens, the agency has the burden of proving that compliance with § 406.160 would result in such alteration or burdens. The decision that compliance would result in such alteration or burdens must be made by the agency head or his or her designee after considering all agency resources available for use in the funding and operation of the conducted program or activity, and must be accompanied by a written statement of the reasons for reaching that conclusion. If an action required to comply with this section would result in such an alteration or such burdens, the agency shall take any other action that would not result in such an alteration or such burdens but would nevertheless ensure that, to the maximum extent possible, handicapped persons receive the benefits and services of the program or activity.

§§ 406.161–406.169 [Reserved]

§ 406.170 Compliance procedures.

(a) Except as provided in paragraph (b) of this section, this section applies to all allegations of discrimination on the basis of handicap in programs or activities conducted by the agency.

(b) The agency shall process complaints alleging violations of section 504 with respect to employment according to the procedures established by the Equal Employment Opportunity Commission in 29 CFR part 1613 pursuant to section 501 of the Rehabilitation Act of 1973 (29 U.S.C. 791).

(c) The Director, Personnel and Administration shall be responsible for coordinating implementation of this section. Complaints may be sent to the Director, Personnel and Administration, American Battle Monuments Commission, Room 5127, Pulaski Building, 20 Massachusetts Ave., NW., Washington, DC 20314.

(d) The agency shall accept and investigate all complete complaints for which it has jurisdiction. All complete complaints must be filed within 180 days of the alleged act of discrimination. The agency may extend this time period for good cause.

(e) If the agency receives a complaint over which it does not have jurisdiction, it shall promptly notify the complainant and shall make reasonable efforts to refer the complaint to the appropriate government entity.

(f) The agency shall notify the Architectural and Transportation Barriers Compliance Board upon receipt of any complaint alleging that a building or facility that is subject to the Architectural Barriers Act of 1968, as amended (42 U.S.C. 4151–4157), or section 502 of the Rehabilitation Act of 1973, as amended (29 U.S.C. 792), is not readily accessible to and usable by handicapped persons.

(g) Within 180 days of the receipt of a complete complaint for which it has jurisdiction, the agency shall notify the complainant of the results of the investigation in a letter containing—

(1) Findings of fact and conclusions of law;

(2) A description of a remedy for each violation found;

(3) A notice of the right to appeal.

(h) Appeals of the findings of fact and conclusions of law or remedies must be filed by the complainant within 90 days of receipt from the agency of the letter required by § 406.170(g). The agency may extend this time for good cause.

(i) Timely appeals shall be accepted and processed by the head of the agency.

(j) The head of the agency shall notify the complainant of the results of the appeal within 60 days of the receipt of the request. If the head of the agency determines that additional information is needed from the complainant, he or she shall have 60 days from the date of receipt of the additional information to make his or her determination on the appeal.

(k) The time limits cited in paragraphs (g) and (j) of this section may be extended with the permission of the Assistant Attorney General.

(l) The agency may delegate its authority for conducting complaint investigations to other Federal agencies, except that the authority for making the final determination may not be delegated to another agency.

[51 FR 4577, Feb. 5, 1986, as amended at 51 FR 4577, Feb. 5, 1986]

§§ 406.171–406.999 [Reserved]

PARTS 407–499 [RESERVED]

CHAPTER V—SMITHSONIAN INSTITUTION

Part		*Page*
500–503	[Reserved]	
504	Rules and regulations governing Smithsonian Institution buildings and grounds	55
520	Rules and regulations governing the buildings and grounds of the National Zoological Park of the Smithsonian Institution	57
530	Claims against the Smithsonian Institution including the National Gallery of Art, the John F. Kennedy Center for the Performing Arts and the Woodrow Wilson International Center for Scholars	59
531–599	[Reserved]	

PARTS 500–503 [RESERVED]

PART 504—RULES AND REGULATIONS GOVERNING SMITHSONIAN INSTITUTION BUILDINGS AND GROUNDS

Sec.
504.1 General.
504.2 Recording presence.
504.3 Preservation of property.
504.4 Conformity with signs and emergency directions.
504.5 Nuisances.
504.6 Gambling.
504.7 Intoxicating beverages and narcotics.
504.8 Soliciting, vending, debt collection, and distribution of handbills.
504.9 Placards, signs, banners and flags.
504.10 Dogs and other animals.
504.11 Photographs for news, advertising, or commercial purposes.
504.12 Items to be checked.
504.13 Vehicular and pedestrian traffic.
504.14 Weapons and explosives.
504.15 Nondiscrimination.
504.16 Penalties.

AUTHORITY: Secs. 1–9, 65 Stat. 634, as amended, secs. 1–4, 78 Stat. 365; 40 U.S.C. 193n–193w.

SOURCE: 33 FR 6656, May 1, 1968, unless otherwise noted.

§ 504.1 General.

These rules and regulations apply to all buildings and grounds of the Smithsonian Institution, as defined in section 3, 78 Stat. 366; 40 U.S.C. 193v(1) (A) and (C), and to all persons entering in or on such buildings and grounds, hereinafter referred to as the premises

§ 504.2 Recording presence.

Except as otherwise ordered, Smithsonian buildings shall be closed to the public after normal visiting hours. Such buildings, or portions thereof, shall also be closed to the public in emergency situations and at such other times as may be necessary for the orderly conduct of business. Whenever the buildings are closed to the public for any reason, visitors will immediately leave the premises upon being requested by a guard or other authorized individuals. Admission to such premises during periods when closed to the public will be limited to authorized individuals who will be required to register and identify themselves when requested by guards or other authorized individuals.

§ 504.3 Preservation of property.

It is unlawful willfully to destroy, damage, or remove property or any part thereof. Any parcels, portfolios, bags, or containers of any kind may be required to be opened and the contents identified prior to removal from the premises. In order to remove any property from the premises, a properly completed property pass signed by an authorized official of the Smithsonian Institution may be required prior to removal.

§ 504.4 Conformity with signs and emergency directions.

Persons in or on the premises shall comply with official signs of a prohibitory or directory nature and with the directions of authorized individuals.

§ 504.5 Nuisances.

The use of loud, abusive, or otherwise improper language; unwarranted loitering, sleeping or assembly; the creation of any hazard to persons or things; improper disposal of rubbish; spitting, prurient prying; the commission of any obscene or indecent act, or any other unseemly or disorderly conduct on the premises; throwing articles of any kind from or within a building; or climbing upon any part of a building is prohibited.

§ 504.6 Gambling.

Participating in games for money or other personal property or the operation of gambling devices, the conduct of a lottery or pool, or the selling or purchasing of numbers tickets in or on the premises is prohibited.

§ 504.7 Intoxicating beverages and narcotics.

Entering the premises or the operating of a motor vehicle thereon by a person under the influence of any intoxicating beverage or narcotic drug or the use of such drug in or on the premises is prohibited. Consumption of intoxicating beverages on the premises is prohibited unless officially authorized.

§ 504.8 Soliciting, vending, debt collection, and distribution of handbills.

The soliciting of alms and contributions, commercial soliciting and vending of all kinds, the display or distribution of commercial advertising, or the collecting of private debts, in or on the premises is prohibited. This rule does not apply to national or local drives for funds for welfare, health, and other purposes sponsored or approved by the Smithsonian Institution concessions, or personal notices posted by employees on authorized bulletin boards. Distribution of material such as pamphlets, handbills, and flyers is prohibited without prior approval of authorized individuals.

§ 504.9 Placards, signs, banners and flags.

The displaying or carrying of placards, signs, banners, or flags is prohibited unless officially authorized.

§ 504.10 Dogs and other animals.

Dogs and other animals, except seeing-eye dogs, shall not be brought upon the premises for other than official purposes.

§ 504.11 Photographs for news, advertising, or commercial purposes.

No photographs for advertising or any other commercial purpose may be taken on the premises unless officially authorized.

§ 504.12 Items to be checked.

Umbrellas, canes (not needed to assist in walking), or other objects capable of inflicting damage to property or exhibits may be required to be checked in buildings where checking facilities are provided.

§ 504.13 Vehicular and pedestrian traffic.

(a) Drivers of all vehicles in or on the premises shall drive in a careful and safe manner at all times and shall comply with the signals and directions of the guards and all posted traffic signs.

(b) The blocking of entrances, driveways, walks, loading platforms, or fire hydrants in or on property is prohibited. Parking without authority, or parking in unauthorized locations or in locations reserved for other persons or contrary to the direction of posted signs, is prohibited. This paragraph may be supplemented from time to time by the issuance and posting of such additional traffic and parking directives as may be required, and such directives shall have the same force and effect as if made a part thereof.

§ 504.14 Weapons and explosives.

No person while on the premises shall carry firearms, other dangerous or deadly weapons, or explosives, either openly or concealed, except for official purposes.

§ 504.15 Nondiscrimination.

There shall be no discrimination by segregation or otherwise against any person or persons because of race, religion, color, or national origin in furnishing or by refusing to furnish to such person or persons the use of any facility of a public nature, including all services, privileges, accommodations, and activities provided thereby on the premises.

§ 504.16 Penalties.

Section 6 of the Smithsonian Institution Special Policing Statute, Act of October 24, 1951, 65 Stat. 635, 40 U.S.C. 193(s) states that:

> Whoever violates any provision of sections 193o–193q of this Title, or any regulation prescribed under section 193r of this Title, shall be fined not more than $100 or imprisoned not more than sixty days, or both, prosecution for such offenses to be had in the District of Columbia Court of General Sessions, upon information by the U.S. attorney or any of his assistants: *Provided,* That in any case where, in the commission of such offense, property is damaged in an amount exceeding $100, the amount of the fine for the offense may be not more than $5,000, the period of imprisonment for the offense may be not more than 5 years and prosecution shall be had in the U.S. District Court for the District of Columbia by indictment, or if the defendant, after he has been advised of the nature of the charge and of his rights, waives in open court prosecution by indictment, by information by the U.S. attorney or any of his assistants.

PART 520—RULES AND REGULATIONS GOVERNING THE BUILDINGS AND GROUNDS OF THE NATIONAL ZOOLOGICAL PARK OF THE SMITHSONIAN INSTITUTION

Sec.
520.1 General.
520.2 Recording presence.
520.3 Preservation of property.
520.4 Protection of zoo animals.
520.5 Conformity with signs and emergency directions.
520.6 Nuisances.
520.7 Gambling.
520.8 Intoxicating beverages and narcotics.
520.9 Soliciting, vending, debt collection, and distribution of handbills.
520.10 Placards, signs, banners, and flags.
520.11 Dogs and other animals.
520.12 Photographs for news, advertising, or commercial purposes.
520.13 Items to be checked.
520.14 Vehicular and pedestrian traffic.
520.15 Weapons and explosives.
520.16 Nondiscrimination.
520.17 Lost and found.
520.18 Penalties.

AUTHORITY: Secs. 1–9, 65 Stat. 634, as amended, secs. 1–4, 78 Stat. 365; 40 U.S.C. 193n–193w.

SOURCE: 33 FR 17175, Nov. 20, 1968, unless otherwise noted.

§ 520.1 General.

The rules and regulations in this part apply to all buildings and grounds of the National Zoological Park of the Smithsonian Institution, as defined in sec. 3, 78 Stat. 366; 40 U.S.C. 193v(1)(B), and to all persons entering in or on such buildings and grounds, hereinafter referred to as the premises.

§ 520.2 Recording presence.

Except as otherwise ordered, National Zoological Park buildings and grounds shall be closed to the public after posted visiting hours. Such buildings and grounds, or portions thereof, shall be also closed to the public in emergency situations and at such other times as may be necessary for the orderly conduct of business. Whenever the buildings and grounds or portions thereof are closed to the public for any reason, visitors will immediately leave the premises upon being requested by a police officer or other authorized individual. Admission to such premises during periods when closed to the public will be limited to authorized individuals who will be required to register and identify themselves when requested by police officers or other authorized individuals.

§ 520.3 Preservation of property.

It is unlawful willfully to destroy, damage, or remove property or any part thereof. Any parcels, portfolios, bags, or containers of any kind may be required to be opened and the contents identified prior to removal from the premises. In order to remove any property from the premises, a properly completed property pass signed by an authorized official of the National Zoological Park may be required prior to removal.

§ 520.4 Protection of zoo animals.

Except for official purposes, no person shall:

(a) Kill, injure, or disturb any exhibit or research animal by any means except to secure personal safety;

(b) Pet, attempt to pet, handle, move, or remove exhibit or research animals;

(c) Feed exhibit or research animals, except in strict accordance with authorized signs;

(d) Catch, attempt to catch, trap, remove, or kill any free roaming animals inhabiting the premises;

(e) Go over, under, between, or otherwise cross any guardrail, fence, moat, wall, or any other safety barrier; or to seat, stand, or hold children over any of the above-mentioned barriers;

(f) Throw or toss rocks, or any other missiles into, from, or while on premises;

(g) Bring strollers, baby carriages, or other conveyances, except wheel chairs, into exhibit buildings and public restrooms;

(h) Engage in ball games, or any athletic activity, except in places as may be officially designated for such purposes;

(i) Smoke or carry lighted cigarettes, cigars, or pipes into exhibit buildings, or to have a fire of any kind on the premises; or

(j) Damage, deface, pick, or remove any herb, shrub, bush, tree, or turf, or portion thereof, on the premises.

§ 520.5 Conformity with signs and emergency directions.

Persons in or on the premises shall comply with official signs of a prohibitory or directory nature and with the directions of authorized individuals.

§ 520.6 Nuisances.

The use of loud, abusive, or otherwise improper language; unwarranted loitering, sleeping or assembly; the creation of any hazard to persons or things; improper disposal of rubbish; spitting; prurient prying; the commission of any obscene or indecent act, or any other unseemly or disorderly conduct on the premises; throwing articles of any kind on the premises, or climbing upon any part of the building is prohibited.

§ 520.7 Gambling.

Participating in games for money or other personal property or the operation of gambling devices, the conduct of a lottery or pool, or the selling or purchasing of numbers tickets in or on the premises is prohibited.

§ 520.8 Intoxicating beverages and narcotics.

Entering the premises or the operating of a motor vehicle thereon by a person under the influence of any intoxicating beverage or narcotic drug or the use of such drug in or on the premises is prohibited. Consumption of intoxicating beverages on the premises is prohibited, unless officially authorized.

§ 520.9 Soliciting, vending, debt collection, and distribution of handbills.

The soliciting of alms and contributions, commercial soliciting and vending of all kinds, the display or distribution of commercial advertising or the collecting of private debts, in or on the premises is prohibited. This rule does not apply to national or local drives for funds for welfare, health, and other purposes sponsored or approved by the National Zoological Park, concessions, or personal notices posted by employees on authorized bulletin boards. Distribution of material such as pamphlets, handbills, and flyers is prohibited without prior approval of authorized individuals.

§ 520.10 Placards, signs, banners, and flags.

The displaying or carrying of placards, signs, banners, or flags is prohibited unless officially authorized.

§ 520.11 Dogs and other animals.

Dogs and other animals, except seeing-eye dogs, shall not be brought upon the premises for other than official purposes unless confined to automobiles.

§ 520.12 Photographs for news, advertising, or commercial purposes.

No photographs for advertising or any other commercial purpose may be taken on the premises unless officially authorized.

§ 520.13 Items to be checked.

Umbrellas, canes (not needed to assist in walking), or other objects capable of inflicting damage to property or exhibits may be required to be checked at the police station where checking facilities are provided.

§ 520.14 Vehicular and pedestrian traffic.

(a) Drivers of all vehicles in or on the premises shall drive in a careful and safe manner at all times and shall comply with the signals and directions of the police and all posted traffic signs.

(b) The blocking of entrances, driveways, walks, loading platforms, or fire hydrants in or on property is prohibited. Parking without authority, or parking in unauthorized locations or in locations reserved for other persons or contrary to the direction of posted signs, is prohibited. This paragraph may be supplemented from time to time by the issuance and posting of such additional traffic and parking directives as may be required, and such directives shall have the same force and effect as if made a part thereof.

§ 520.15 Weapons and explosives.

No person while on the premises shall carry firearms, other dangerous or deadly weapons, or explosives, either openly or concealed, except for official purposes, nor shall any person discharge or set off any firework or explosive of any nature on the premises.

§ 520.16 Nondiscrimination.

There shall be no discrimination by segregation or otherwise against any person or persons because of race, religion, color, or national origin in furnishing or by refusing to furnish to such person or persons the use of any facility of a public nature, including all services, privileges, accommodations, and activities provided thereby on the premises.

§ 520.17 Lost and found.

(a) Lost articles or money which are found in areas covered by this part shall be immediately referred to the police station. Proper records shall be kept at Police Headquarters of the receipt and disposition of such articles. If an article or money found on park areas and referred to Zoo Police Headquarters is not claimed by the owner within a period of 60 days, it shall be returned to the finder and appropriate receipt obtained; except that in the case of National Zoological Park employees, articles or money turned in which are not claimed by the owner within 60 days shall be considered as abandoned to the Smithsonian Institution. Such articles or money shall be transferred to the Treasurer of the Smithsonian Institution, who shall make suitable disposition of articles and remit all proceeds of such disposition and all unclaimed money into the unrestricted funds of the Smithsonian Institution.

(b) The abandonment of any personal property in any of the park areas is prohibited.

§ 520.18 Penalties.

Section 6 of the Smithsonian Institution Special Policing Statute, Act of October 24, 1951, 65 Stat. 635, 40 U.S.C. 193 (s) states that:

Whoever violates any provision of sections 193o–193q of this title, or any regulation prescribed under section 193r of this Title, shall be fined not more than $100 or imprisoned not more than 60 days, or both, prosecution for such offenses to be had in the District of Columbia Court of General Sessions, upon information by the United States attorney or any of his assistants: *Provided,* That in any case where, in the commission of such offense, property is damaged in an amount exceeding $100, the amount of the fine for the offense may be not more than $5,000, the period of imprisonment for the offense may be not more than 5 years and prosecution shall be had in the U.S. District Court for the District of Columbia by indictment, or if the defendant, after he has been advised of the nature of the charge and of his rights, waives in open court prosecution by indictment, by information by the U.S. attorney or any of his assistants.

PART 530—CLAIMS AGAINST THE SMITHSONIAN INSTITUTION INCLUDING THE NATIONAL GALLERY OF ART, THE JOHN F. KENNEDY CENTER FOR THE PERFORMING ARTS AND THE WOODROW WILSON INTERNATIONAL CENTER FOR SCHOLARS

AUTHORITY: 20 U.S.C. 41, *et seq.*

§ 530.1 Tort claims.

The Smithsonian Institution (which encompasses the National Gallery of Art, the John F. Kennedy Center for the Performing Arts and the Woodrow Wilson International Center for Scholars) falls within the purview of the Federal Tort Claims Act. Internal procedures for implementing the Act follow the current general guidance issued by the U.S. Department of Justice in 28 CFR part 14. Information on specific claims procedures can be obtained as follows:

(a) Smithsonian Institution: Office of the General Counsel, Smithsonian Institution, Washington, DC 20560.

(b) National Gallery of Art: Administrator, National Gallery of Art, Washington, DC 20565.

(c) John F. Kennedy Center for the Performing Arts: Director of Operations, John F. Kennedy Center for the Performing Arts, Washington, DC 20566.

(d) Woodrow Wilson International Center for Scholars: Assistant Director for Administration, Woodrow Wilson International Center for Scholars, Smithsonian Institution, Washington, DC 20560.

[49 FR 9421, Mar. 13, 1984]

PARTS 531–599 [RESERVED]

CHAPTER VI [RESERVED]

CHAPTER VII—LIBRARY OF CONGRESS

EDITORIAL NOTE: The regulations in this chapter VII were formerly codified in 44 CFR chapter V.

Part		*Page*
700	[Reserved]	
701	Procedures and services	63
702	Conduct on Library premises	68
703	Disclosure or production of records or information	73
704	National Film Registry of the Library of Congress	79
705	Reproduction, compilation, and distribution of news transmissions under the provisions of the American Television and Radio Archives Act	79
706–799	[Reserved]	

PART 700 [RESERVED]

PART 701—PROCEDURES AND SERVICES

Sec.
701.1 Information about the Library.
701.2 Acquisition of Library material by non-purchase means.
701.3 Methods of disposition of surplus and/or duplicate materials.
701.4 Contracting Officers.
701.5 Policy on authorized use of the Library name, seal, or logo.
701.6 Loans of library materials for blind and other physically handicapped persons.

AUTHORITY: 2 U.S.C. 136; 18 U.S.C. 1017.

SOURCE: 69 FR 39838, July 1, 2004, unless otherwise noted.

§ 701.1 Information about the Library.

(a) *Information about the Library*. It is the Library's policy to furnish freely information about the Library to the media. All requests from the media, for other than generally published information and Library records, should be referred to the Public Affairs Office. For information about access to, service of, and employment with the Library of Congress, go to *http://www.loc.gov*.

(b) *Public Affairs Office*. The Public Affairs Office shall have the principal responsibility for responding to requests for information about the Library from representatives of the media; giving advice to Library officers and staff members on public-relations and public-information matters; keeping the Librarian and other officers informed of important developments in this field; and promoting the resources and activities of the Library.

(1) During regular office hours (8:30 a.m. to 5 p.m.) telephone operators shall refer requests for information, from the media only, about the Library to the Public Affairs Office. All other requests for information shall be referred to the National Reference Service or other appropriate offices of the Library.

(2) All other Library offices and staff members who receive inquiries directly from representatives of the media for information about the Library, other than generally published information, shall refer such inquiries to the Public Affairs Office.

(3) The Public Affairs Office shall respond directly to inquiries concerning the Library, calling upon other offices to supply information to it as necessary, or shall arrange for other offices or staff members, as appropriate, to supply such information directly and report back to Public Affairs after the contact has been made. Requests for Library of Congress records, however, shall be made in accordance with 36 CFR part 703.

(4) When the Public Affairs Office is closed (evenings, Saturdays, Sundays, and holidays), requests from the media for information about the Library shall be referred to the Public Affairs Officer at his/her home. In the event that person is not available, inquiries shall be referred to the Acting Public Affairs Officer, or, in turn, a designated public affairs specialist.

(c) *Other Library Units and Staff Members*. All Other Library Units and Staff Members shall be responsible for keeping the Public Affairs Office fully and promptly informed of contacts with the press, except in those instances of routine reference inquiries; supplying the Public Affairs Office with any data it requires in order to respond to inquiries from representatives of the media; and reporting promptly to the Public Affairs Office substantive contacts with media representatives about the Library and its policies or activities.

§ 701.2 Acquisition of Library material by non-purchase means.

(a) *Gifts*. It is the policy of the Library of Congress to foster the enrichment of its collections through gifts of materials within the terms of the Library's acquisitions policies. In implementing this policy, division chiefs and other authorized officers of the Library may undertake, as representatives of the Library, preliminary negotiations for gifts to the Library. However, responsibility for formal acceptance of gifts of material and for approval of conditions of such gifts rests with The Librarian of Congress or his designee. The Chief, African/Asian Acquisitions and Overseas Operations Division, Chief, Anglo-American Acquisitions Division, and Chief, European and

Latin American Acquisitions Division are responsible for routine gifts in the geographic areas covered by their divisions.

(b) *Deposits.* (1) The Anglo-American Acquisitions Division is the only division in the Library authorized to make technical arrangements, formally negotiate for the transportation of materials and conditions of use at the Library, and prepare written Agreements of Deposit to formalize these negotiations. The term ''deposit'' is used to mean materials which are placed in the custody of the Library for general use on its premises, but which remain the property of their owners during the time of deposit and until such time as title in them may pass to the Library of Congress. A deposit becomes the permanent property of the Library when title to it is conveyed by gift or bequest. A deposit may be withdrawn by the owner rather than conveyed to the Library. A deposit shall be accompanied by a signed Agreement of Deposit.

(2) It is the policy of the Library of Congress to accept certain individual items or special collections as deposits when: permanent acquisition of such materials cannot be effected immediately; the depositors give reasonable assurance of their intention to donate the materials deposited to the United States of America for the benefit of the Library of Congress; the Library of Congress determines that such ultimate transfer of title will enrich its collections; and the depositors agree that the materials so deposited may be available for unrestricted use or use in the Library under reasonable restrictions.

(c) *Conditional Gifts of Material to the Library.* In cases where donors wish to attach conditions of use, negotiating officers cannot commit the Library to acceptance of such conditions. The Librarian of Congress or designee will consult the appropriate division and service unit officers and the General Counsel to ascertain whether the conditions are generally acceptable.

§ 701.3 Methods of disposition of surplus and/or duplicate materials.

(a) *Exchange.* All libraries may make selections on an exchange basis from the materials available in the ''Exchange/Transfer'' category. The policy governing these selections is that exchange be made only when materials of approximately equal value are expected to be furnished in return within a reasonable period. Dealers also may negotiate exchanges of this type for items selected from available exchange materials, but surplus copyright deposit copies of works published after 1977 shall not knowingly be exchanged with dealers. Offers of exchange submitted by libraries shall be submitted to the Chief of the African/Asian Acquisitions and Overseas Operations Division, Anglo-American Acquisitions Division, or European/Latin American Acquisitions Division, or their designees, as appropriate, who shall establish the value of the material concerned. Offers from dealers shall be referred to the Chief of the Anglo-American Acquisitions Division. Exchange offers involving materials valued at $1,000 or more must be approved by the Acquisitions Division Chief; offers of $10,000 or more must be approved by the Director for Acquisitions and Support Services; and offers of $50,000 or more must be approved by the Associate Librarian for Library Services. The Library also explicitly reserves the right to suspend, for any period of time it deems appropriate, the selection privileges of any book dealer who fails to comply fully with any rules prescribed for the disposal of library materials under this section or any other pertinent regulations or statutes.

(b) *Transfer of materials to Government Agencies.* Library materials no longer needed by the Library of Congress, including the exchange use mentioned above, shall be available for transfer to Federal agency libraries or to the District of Columbia Public Library, upon the request of appropriate officers of such entities, and may be selected from both the ''Exchange/Transfer'' and ''Donation'' categories. Existing arrangements for the transfer of materials, such as the automatic transfer of certain classes of books, etc., to specified Government libraries, shall be continued unless modified by the Library.

(c) *Donations of Library materials to educational institutions, public bodies, and nonprofit tax-exempt organizations in*

the United States. It is the Library's policy, in keeping with the Federal Property and Administrative Services Act of 1949, 40 U.S.C. 471 *et seq.*, which does not cover the Library of Congress, to use materials no longer needed for any of the purposes mentioned above to strengthen the educational resources of the Nation by enriching the book collections of educational institutions (full-time, tax-supported or nonprofit schools, school systems, colleges, universities, museums, and public libraries), public bodies (agencies of local, State, or Federal Government), and nonprofit tax-exempt organizations (section 501 of the Internal Revenue Code of 1954, 26 U.S.C. 501, by authorizing the Anglo-American Acquisitions Division to donate to such groups in the United States any materials selected by their representatives. Eligibility to participate in the donation program shall be limited as defined by procedures established by the Anglo-American Acquisitions Division.

(d) *Disposition of residue*. Library materials not needed for the collections of the Library, for its exchange and transfer programs, for sale, or for donation, and which, in the opinion of the Chief, Anglo-American Acquisitions Division, have no commercial value, may be turned over to the General Services Administration (GSA) to be disposed of in accordance with standard Government practice.

§ 701.4 Contracting Officers.

While the Librarian of Congress may sign any agreement, certain other offices of the Library have been delegated authority to contract for materials and services on behalf of the Library of Congress. Contact the Office of the General Counsel of the Library at 202–707–6316 for information on specific delegations.

§ 701.5 Policy on authorized use of the Library name, seal, or logo.

(a) *Purpose*. The purpose of this part is three-fold:

(1) To assure that the Library of Congress is properly and appropriately identified and credited as a source of materials in publications.

(2) To assure that the name or logo of the Library of Congress, or any unit thereof, is used only with the prior approval of the Librarian of Congress or his designee; and

(3) To assure that the seal of the Library of Congress is used only on official documents or publications of the Library.

(b) *Definitions*. (1) For the purposes of this part, publication means any tangible expression of words or thoughts in any form or format, including print, sound recording, television, optical disc, software, online delivery, or other technology now known or hereinafter created. It includes the whole range of tangible products from simple signs, posters, pamphlets, and brochures to books, television productions, and movies.

(2) *Internal Library publication* means a publication over which any unit of the Library has complete or substantial control or responsibility.

(3) *Cooperative publications* are those in which the Library is a partner with the publisher by terms of a cooperative publishing agreement.

(4) *Commercial publications* are those known or likely to involve subsequent mass distribution, whether by a for-profit or not-for-profit organization or individual, which involve a cooperative agreement. A commercial publication can also include a significant number of LC references and is also approved by the LC office that entered into a formal agreement. Noncommercial publications are those which are produced by non-commercial entities.

(5) *Internet sites* are those on-line entities, both commercial and non-commercial, that have links to the Library's site.

(6) *Library logo* refers to any official symbol of the Library or any entity thereof and includes any design officially approved by the Librarian of Congress for use by Library officials.

(7) *Seal* refers to any statutorily recognized seal.

(c) *Credit and recognition policy*. (1) The name ''Library of Congress,'' or any abbreviation or subset such as ''Copyright Office'' or ''Congressional Research Service,'' thereof, is used officially to represent the Library of Congress and its programs, projects, functions, activities, or elements thereof.

The use of the Library's name, explicitly or implicitly to endorse a product or service, or materials in any publication is prohibited, except as provided for in this part.

(2) The Library of Congress seal symbolizes the Library's authority and standing as an official agency of the U.S. Government. As such, it shall be displayed only on official documents or publications of the Library. The seal of the Library of Congress Trust Fund Board shall be affixed to documents of that body as prescribed by the Librarian of Congress. The seal of the National Film Preservation Board shall be affixed to documents of that body as prescribed by the Librarian of Congress. Procedures governing the use of any Library of Congress logo or symbol are set out below. Any person or organization that uses the Library Seal or the Seal of the Library of Congress Trust Fund Board in a manner other than as authorized by the provisions of this section shall be subject to the criminal provisions of 18 U.S.C. 1017.

(3) Questions regarding the appropriateness of the use of any Library logos or symbols, or the use of the Library's name, shall be referred to the Public Affairs Officer.

(4) Cooperative Ventures. (i) Individual, commercial enterprises or noncommercial entities with whom the Library has a cooperative agreement to engage in cooperative efforts shall be instructed regarding Library policy on credit, recognition, and endorsement by the officer or manager with whom they are dealing.

(ii) Ordinarily, the Library logo should appear in an appropriate and suitable location on all cooperative publications. The Library requires that a credit line accompany reproductions of images from its collections and reflect the nature of the relationship such as ''published in association with * * *.''

(iii) The size, location, and other attributes of the logo and credit line should be positioned in such a way that they do not imply Library endorsement of the publication unless such endorsement is expressly intended by the Library, as would be the case in cooperative activities. Use of the Library name or logo in any context suggesting an explicit or implicit endorsement may be approved in only those instances where the Library has sufficient control over the publication to make changes necessary to reflect Library expertise.

(iv) Library officers working on cooperative projects shall notify all collaborators of Library policy in writing if the collaboration is arranged through an exchange of correspondence. All uses of the Library of Congress's name, seal or logo on promotional materials must be approved by the Public Affairs Officer, in consultation with the Office of the General Counsel, in advance. A statement of Library policy shall be incorporated into the agreement if the terms of the collaboration are embodied in any written instrument, such as a contract or letter of understanding. The statement could read as follows:

Name of partner recognizes the great value, prestige and goodwill associated with the name, ''Library of Congress'' and any logo pertaining thereto. *Name of partner* agrees not to knowingly harm, misuse, or bring into disrepute the name or logo of the Library of Congress, and further to assist the Library, as it may reasonably request, in preserving all rights, integrity and dignity associated with its name. Subject to the Library's prior written approval over all aspects of the use and presentation of the Library's name and logo, the *Name of Partner* may use the name of the Library of Congress in connection with publication, distribution, packaging, advertising, publicity and promotion of the _____, produced as a result of this Agreement. The Library will have fifteen (15) business days from receipt of *Name of partner's* written request to approve or deny with comment such requests for use of its name or logo.

(d) *Noncommercial Users*. Library officers assisting individuals who are noncommercial users of Library resources shall encourage them to extend the customary professional courtesy of acknowledging their sources in publications, including films, television, and radio, and to use approved credit lines.

(1) Each product acquired for resale by the Library that involves new labeling or packaging shall bear a Library logo and shall contain information describing the relevance of the item to the Library or its collections. Items not involving new packaging shall be accompanied by a printed description

of the Library and its mission, with Library logo, as well as the rationale for operating a gift shop program in a statement such as, ''Proceeds from gift shop sales are used to support the Library collections and to further the Library's educational mission.''

(2) Electronic Users. Links to other sites from the Library of Congress's site should adhere to the Appropriate Use Policy for External Linking in the Internet Policies and Procedures Handbook. Requests for such linkage must be submitted to the Public Affairs Office for review and approval.

(3) Office Systems Services shall make available copies of the Library seal or logo in a variety of sizes and formats, including digital versions, if use has been approved by the Public Affairs Officer, in consultation with the Office of General Counsel.

(4) Each service unit head shall be responsible for devising the most appropriate way to carry out and enforce this policy in consultation with the General Counsel and the Public Affairs Officer.

(e) *Prohibitions and Enforcement.* (1) All violations, or suspected violations, of this part, shall be reported to the Office of the General Counsel as soon as they become known. Whoever, except as permitted by laws of the U.S., or with the written permission of the Librarian of Congress or his designee, falsely advertises or otherwise represents by any device whatsoever that his or its business, product, or service has been in any way endorsed, authorized, or approved by the Library of Congress shall be subject to criminal penalties pursuant to law.

(2) Whenever the General Counsel has determined that any person or organization is engaged in or about to engage in an act or practice that constitutes or will constitute conduct prohibited by this part or a violation of any requirement of this part, the General Counsel shall take whatever steps are necessary, including seeking the assistance of the U.S. Department of Justice, to enforce the provisions of the applicable statutes and to seek all means of redress authorized by law, including both civil and criminal penalties.

§ 701.6 Loans of library materials for blind and other physically handicapped persons.

(a) *Program.* In connection with the Library's program of service under the Act of March 3, 1931 (46 Stat. 1487), as amended, its National Library Service for the Blind and Physically Handicapped provides books in raised characters (braille), on sound reproduction recordings, or in any other form, under regulations established by the Library of Congress. The National Library Service also provides and maintains reproducers for such sound reproduction recordings for the use of blind and other physically handicapped residents of the United States, including the several States, Territories, Insular Possessions, and the District of Columbia, and American citizens temporarily domiciled abroad.

(b) *Eligibility criteria.* (1) The following persons are eligible for such service:

(i) Blind persons whose visual acuity, as determined by competent authority, is 20/200 or less in the better eye with correcting glasses, or whose wide diameter if visual field subtends an angular distance no greater than 20 degrees.

(ii) Persons whose visual disability, with correction and regardless of optical measurement, is certified by competent authority as preventing the reading of standard printed material.

(iii) Persons certified by competent authority as unable to read or unable to use standard printed material as a result of physical limitations.

(iv) Persons certified by competent authority as having a reading disability resulting from organic dysfunction and of sufficient severity to prevent their reading printed material in a normal manner.

(2) In connection with eligibility for loan services ''competent authority'' is defined as follows:

(i) In cases of blindness, visual disability, or physical limitations ''competent authority'' is defined to include doctors of medicine, doctors of osteopathy, ophthalmologist, optometrists, registered nurses, therapists, professional staff of hospitals, institutions, and public or welfare agencies (e.g., social workers, case workers, counselors,

rehabilitation teachers, and superintendents). In the absence of any of these, certification may be made by professional librarians or by any persons whose competence under specific circumstances is acceptable to the Library of Congress.

(ii) In the case of reading disability from organic dysfunction, competent authority is defined as doctors of medicine who may consult with colleagues in associated disciplines.

(c) *Loans through regional libraries.* Sound reproducers are lent to individuals and appropriate centers through agencies, libraries, and other organizations designated by the Librarian of Congress to service specific geographic areas, to certify eligibility of prospective readers, and to arrange for maintenance and repair of reproducers. Libraries designated by the Librarian of Congress serve as local or regional centers for the direct loan of such books, reproducers, or other specialized material to eligible readers in specific geographic areas. They share in the certification of prospective readers, and utilize all available channels of communication to acquaint the public within their jurisdiction with all aspects of the program.

(d) *National collections.* The Librarian of Congress, through the National Library Service for the Blind and Physically Handicapped, defines regions and determines the need for new regional libraries in cooperation with other libraries or agencies whose activities are primarily concerned with the blind and physically handicapped. It serves as the center from which books, recordings, sound reproducers, and other specialized materials are lent to eligible blind and physically handicapped readers who may be temporarily domiciled outside the jurisdictions enumerated by the Act. It maintains a special collection of books in raised characters and on sound reproduction recordings not housed in regional libraries and makes these materials available to eligible borrowers on interlibrary loan.

(e) *Institutions.* The reading materials and sound reproducers for the use of blind and physically handicapped persons may be loaned to individuals who qualify, to institutions such as nursing homes and hospitals, and to schools for the blind and physically handicapped for the use of such persons only. The reading materials and sound reproducers may also be used in public or private schools where handicapped students are enrolled; however, the students in public or private schools must be certified as eligible on an individual basis and must be the direct and only recipients of the materials and equipment.

(f) *Musical scores.* The National Library Service also maintains a library of musical scores, instructional texts, and other specialized materials for the use of the blind and other physically handicapped residents of the United States and its possessions in furthering their educational, vocational, and cultural opportunities in the field of music. Such scores, texts, and materials are made available on a loan basis under regulations developed by the Librarian of Congress in consultation with persons, organizations, and agencies engaged in work for the blind and for other physically handicapped persons.

(g) *Veterans.* In the lending of such books, recordings, reproducers, musical scores, instructional texts, and other specialized materials, preference shall be at all times given to the needs of the blind and other physically handicapped persons who have been honorably discharged from the Armed Forces of the United States.

(h) Inquiries for information relative to the prescribed procedures and regulations governing such loans and requests for loans should be addressed to Director, National Library Service for the Blind and Physically Handicapped, Library of Congress, Washington, DC 20542 or visit our Web site at *http://www.loc.gov/nls*.

[70 FR 36843, June 27, 2005]

PART 702—CONDUCT ON LIBRARY PREMISES

Sec.
702.1 Applicability.
702.2 Conduct on Library premises.
702.3 Demonstrations.
702.4 Photographs.
702.5 Gambling.
702.6 Alcoholic beverages and controlled substances.

702.7 Weapons and explosives.
702.8 Use and carrying of food and beverages in Library buildings.
702.9 Inspection of property.
702.10 Protection of property.
702.11 Smoking in Library buildings.
702.12 Space for meetings and special events.
702.13 Soliciting, vending, debt collection, and distribution of handbills.
702.14 Penalties.

AUTHORITY: Sec. 1, 29 Stat. 544; 2 U.S.C. 136.

SOURCE: 69 FR 39840, July 1, 2004, unless otherwise noted.

§ 702.1 Applicability.

The rules and regulations in this part apply to all Federal property under the charge and control of the Librarian of Congress and to all persons entering in or on such property.

§ 702.2 Conduct on Library premises.

(a) All persons using the premises shall conduct themselves in such manner as not to affect detrimentally the peace, tranquility, and good order of the Library. Such persons shall:

(1) Use areas that are open to them only at the times those areas are open to them and only for the purposes for which those areas are intended;

(2) Comply with any lawful order of the police or of other authorized individuals; and

(3) Comply with official signs of a restrictive or directory nature.

(b) All persons using the premises shall refrain from:

(1) Creating any hazard to oneself or another person or property, such as by tampering with fire detection and/or security equipment and devices, by fighting, by starting fires, or by throwing or deliberately dropping any breakable article, such as glass, pottery, or any sharp article, or stones or other missiles;

(2) Using Library facilities for living accommodation purposes, such as unauthorized bathing, sleeping, or storage of personal belongings, regardless of the specific intent of the individual;

(3) Engaging in inordinately loud or noisy activities;

(4) Disposing of rubbish other than in receptacles provided for that purpose;

(5) Throwing articles of any kind from or at a Library building or appurtenance;

(6) Committing any obscene or indecent act such as prurient prying, indecent exposure, and soliciting for illegal purposes;

(7) Removing, defacing, damaging, or in any other way so misusing a statue, seat, wall, fountain, or other architectural feature or any tree, shrub, plant, or turf;

(8) Stepping upon or climbing upon any statue, fountain, or other ornamental architectural feature or any tree, shrub, or plant;

(9) Bathing, wading, or swimming in any fountain;

(10) Painting, marking or writing on, or posting or otherwise affixing any handbill or sign upon any part of a Library building or appurtenance, except on bulletin boards installed for that purpose and with the appropriate authorization;

(11) Bringing any animal onto Library buildings and turf other than dogs trained to assist hearing or visually impaired persons;

(12) Threatening the physical well-being of an individual; and

(13) Unreasonably obstructing reading rooms, food service facilities, entrances, foyers, lobbies, corridors, offices, elevators, stairways, or parking lots in such manner as to impede or disrupt the performance of official duties by the Library staff or to prevent Library patrons from using or viewing the collections.

(c) Public reading rooms, research facilities, and catalog rooms are designated as nonpublic forums. As such, they shall be used only for quiet scholarly research or educational purposes requiring use of Library materials. All persons using these areas shall comply with the rules in effect in the various public reading rooms, shall avoid disturbing other readers, and shall refrain from engaging in disruptive behavior, including but not limited to (1) Eating, drinking, or smoking in areas where these activities are expressly prohibited;

(2) Using loud language or making disruptive noises;

(3) Using any musical instrument or device, loudspeaker, sound amplifier, or other similar machine or device for the production or reproduction of

sound, except for devices to assist hearing or visually impaired persons, without authorization;

(4) Interfering by offensive personal hygiene with the use of the area by other persons;

(5) Spitting, defecating, urinating, or similar disruptive activities;

(6) Intentionally abusing the furniture or furnishings in the area;

(7) Intentionally damaging any item from the collections of the Library of Congress or any item of Library property;

(8) Using computing terminals for purposes other than searching or training persons to search the Library's data bases or those under contract to the Library, or misusing the terminals by intentional improper or obstructive searching; and

(9) Using the Library's photocopy machines or microfilm reader-printers for purposes other than copying Library materials, for copying that violates the copyright law (Title 17 U.S.C.), or for copying in violation of posted usage restrictions, e.g., ''staff only.''

(10) Performing any other inappropriate or illegal act, such as accessing or showing child pornography, online or otherwise on Library premises; and

(11) failing to wear appropriate clothing in Library facilities, including, but not limited to, footwear (shoes or sandals) and shirts.

(12) any behavior or interaction by a member of the public that unnecessarily hinders staff from performing the Library's public service functions.

§ 702.3 Demonstrations.

(a) Library buildings and grounds are designated as limited public forums, except for those areas designated as nonpublic forums. However, only Library grounds (defined in 2 U.S.C. 167j), not buildings, may be utilized for demonstrations, including assembling, marching, picketing, or rallying. In addition, as the need for the determination of other matters arises, the Librarian will determine what additional First Amendment activities may not be permitted in a limited public forum. In making such determination, The Librarian will consider only whether the intended activity is incompatible with the primary purpose and intended use of that area.

(b) The Director, Integrated Support Services, shall designate certain Library grounds as available for demonstrations. Persons seeking to use such designated areas for the purpose of demonstrations shall first secure written permission from the Director, Integrated Support Services. An application for such permission shall be filed with Facility Services no later than four business days before the time of the proposed demonstration and shall include:

(1) The name of the organization(s) or sponsor(s) of the demonstration;

(2) The contact person's name and telephone number;

(3) The proposed purpose of the demonstration;

(4) The proposed location of the demonstration;

(5) The date and hour(s) planned for the demonstration;

(6) The anticipated number of demonstrators;

(7) A concise statement detailing arrangements for the prompt cleanup of the site after the demonstration;

(8) Any request for permission to use loudspeakers, microphones, or other amplifying devices, hand held or otherwise; and

(9) A signed agreement by the applicant(s) to comply with Library regulations and terms and conditions established for the demonstration.

(c) Upon receipt of an application, Facility Services shall forward the application, along with any comments and recommendations, to the Director, Integrated Support Services, within one business day of the office's receipt of said application. The Director, Integrated Support Services, shall respond to the request within three business days of his or her receipt of said application. The Director, Integrated Support Services, shall request advice from the Office of the General Counsel on any legal questions arising from said application.

(d) Permission to demonstrate shall be based upon:

(1) The availability of the requested location;

(2) The likelihood that the demonstration will not interfere with Library operations or exceed city noise limitations as defined by District of Columbia regulations; and

(3) The likelihood that the demonstration will proceed peacefully in the event that a volatile situation in the United States or abroad might lead to a potentially harmful threat toward the Capitol complex, including Library buildings and grounds.

§ 702.4 Photographs.

(a) The policy set out herein applies to all individuals who are photographing Library of Congress buildings.

(b) Special permission is not required for photographing public areas, if no tripods, lights or other specialized equipment is used. Public areas do not include reading rooms, exhibition areas or other areas where photographing is prohibited by signage.

(c) For all other photographing, requests for permission must be made at least one week prior to the photographing. The Director of Communications, or his/her designee, is authorized to grant or deny permission, in writing, to photograph the interior of Library buildings and may set the conditions under which the photographing may take place. Such conditions may include provision for a fee for services rendered consistent with the Library's policies and procedures for the revolving fund under 2 U.S.C. 182b.

§ 702.5 Gambling.

Participation in any illegal gambling, such as the operation of gambling devices, the conduct of an illegal pool or lottery, or the unauthorized sale or purchase of numbers or lottery tickets, on the premises is prohibited.

§ 702.6 Alcoholic beverages and controlled substances.

(a) The use of alcoholic beverages on the premises is prohibited except on official occasions for which advance written approval has been given and except for concessionaires to whom Library management has granted permission to sell alcoholic beverages on the premises.

(b) The illegal use or possession of controlled substances on the premises is prohibited.

§ 702.7 Weapons and explosives.

Except where duly authorized by law, and in the performance of law enforcement functions, no person shall carry firearms, other dangerous or deadly weapons, or explosives, either openly or concealed, while on the premises.

§ 702.8 Use and carrying of food and beverages in Library buildings.

Consumption of food and beverages in Library buildings is prohibited except at point of purchase or other authorized eating places. Under no circumstances may food or beverages be carried to the bookstacks or other areas where there exists significant risk to Library materials or property or where there may result a detraction from the dignity or efficiency of public service.

§ 702.9 Inspection of property.

(a) Individuals entering Library buildings do so with the understanding that all property in their possession including, but not limited to, suitcases, briefcases, large envelopes, packages, and office equipment may be inspected.

(b) Upon entering the Library buildings privately owned office machines including but not limited to typewriters, computing machines, stenotype machines, and dictating machines, shall be registered with the police officer at the entrance to buildings for the purpose of controlling such equipment.

(c) In the discharge of official duties, Library officials are authorized to inspect Government-owned or furnished property assigned to readers and the general public for their use, such as cabinets, lockers, and desks. Unauthorized property or contraband found in the possession of members of the Library staff, readers, or the general public as a result of such inspections will be subject to confiscation by Library officials.

§ 702.10 Protection of property.

(a) Any person who shall steal, wrongfully deface, injure, mutilate, tear, or destroy library materials, or

any portion thereof, shall be punished by a fine of not more than $1,000 or imprisoned not more than 3 years, or both (18 U.S.C. 641; 18 U.S.C. 1361; 18 U.S.C. 2071).

(b) Any person who embezzles, steals, purloins, or, without authority, disposes of anything of value of the United States, or willfully injures or commits any depredation against any Government property shall be punished by a fine of not more than $10,000 or imprisoned not more than 10 years, or both; but if the value of such property does not exceed the sum of $100, he shall be fined not more than $1,000 or imprisoned not more than 1 year, or both. (18 U.S.C. 641; 18 U.S.C. 1361.)

§ 702.11 Smoking in Library buildings.

Smoking in Library areas is prohibited except in those areas specifically designated for this purpose.

§ 702.12 Space for meetings and special events.

Information about the use of space for meeting and special events at the Library can be found at *http://www.loc.gov/about/facilities/index.html*, or by accessing the Library's home page at *http://www.loc.gov* and following the link ''About the Library'' to ''Event Facilities.''

§ 702.13 Soliciting, vending, debt collection, and distribution of handbills.

(a) The soliciting of alms and contributions, commercial soliciting and vending of all kinds, the display or distribution of commercial advertising, the offering or exposing of any article for sale, or the collecting of private debts on the grounds or within the buildings of the Library is prohibited. This rule does not apply to national or local drives for funds for welfare, health, or other purposes sponsored or approved by The Librarian of Congress, nor does it apply to authorized concessions, vending devices in approved areas, or as specifically approved by the Librarian or designee.

(b) Distribution of material such as pamphlets, handbills, and flyers is prohibited without prior approval.

(c) Peddlers and solicitors will not be permitted to enter Library buildings unless they have a specific appointment, and they will not be permitted to canvass Library buildings.

§ 702.14 Penalties.

(a) Persons violating provisions of 2 U.S.C. 167a to 167e, inclusive, regulations promulgated pursuant to 2 U.S.C. 167f, this part 702, or other applicable Federal laws relating to the Library's property, including its collections, are subject to removal from the premises, to arrest, and to any additional penalties prescribed by law.

(b) Upon written notification by the Director of Security, disruptive persons may be denied further access to the premises and may be prohibited from further use of the Library's facilities.

(1) Within three workdays of receipt of such notification, an affected individual may make a written request, including the reasons for such a request, to the Director of Security for a reconsideration of said notification.

(2) The Director of Security shall respond within three workdays of receipt of such request for reconsideration and may, at his or her option, rescind, modify, or reaffirm said notification.

(c) Readers who violate established conditions and/or procedures for using material are subject to penalties to be determined by or in consultation with the unit head responsible for the custody of the material used.

(1) When a reader violates a condition and/or procedure for using material, the division chief or head of the unit where the infraction occurred may, upon written notification, deny further access to the material, or to the unit in which it is housed, to be determined by the nature of the infraction and the material involved.

(2) Within five workdays of receipt of such notification, the reader may make a written request, including the reasons for such request to the Associate Librarian for that service unit, or his/her designee, for a reconsideration of said notification.

(3) The Associate Librarian for that service unit, or his/her designee, shall respond within five workdays of receipt of such request for reconsideration and may rescind, modify, or reaffirm said notification, as appropriate.

(4) Repeated violations of established conditions and/or procedures for using material may result in denial of further access to the premises and further use of the Library's facilities or revocation of the reader's User Card, in accordance with established access regulations.

(5) Mutilation or theft of Library property also may result in criminal prosecution, as set forth in 18 U.S.C. 641, 1361, and 2071; and 22 D.C. Code 3106.

(6) In certain emergency situations requiring prompt action, the division chief or head of the unit where the infraction occurred may immediately deny further access to the material or unit prior to formally taking written action. In such cases, the reader shall be notified, in writing, within three days of the action taken and the reasons therefor. The reader then may request reconsideration.

(7) A copy of any written notification delivered pursuant to this part shall be forwarded to the Captain, Library Police, the service unit, and the Director, Integrated Support Services, for retention.

PART 703—DISCLOSURE OR PRODUCTION OF RECORDS OR INFORMATION

Subpart A—Availability of Library of Congress Records

Sec.
703.1 Purpose and scope of this subpart.
703.2 Policy.
703.3 Administration responsibilities.
703.4 Definitions.
703.5 Records exempt from disclosure.
703.6 Procedures for access to and copying of records.
703.7 Public reading facility.
703.8 Fees and charges.
APPENDIX A TO SUBPART A OF PART 703—FEES AND CHARGES FOR SERVICES PROVIDED TO REQUESTORS OF RECORD

Subpart B—Testimony by Employees and Production of Documents in Certain Legal Proceedings Where the Library Is Not a Party

703.15 Purpose and scope of this subpart.
703.16 Policy on presentation of testimony and production of documents.
703.17 Procedures when testimony and/or documents are demanded.
703.18 Procedures when an employee's appearance is demanded or documents are demanded.
703.19 Requests for authenticated copies of Library documents.
703.20 File copies.
703.21 Effect of this part.
703.22 Where to serve demands.

AUTHORITY: 2 U.S.C. 136.

SOURCE: 67 FR 16019, Apr. 4, 2002, unless otherwise noted.

Subpart A—Availability of Library of Congress Records

§ 703.1 Purpose and scope of this subpart.

(a) This subpart implements the policy of the Library with respect to the public availability of Library of Congress records. Although the Library is not subject to the Freedom of Information Act, as amended (5 U.S.C. 552), this subpart follows the spirit of that Act consistent with the Library's duties, functions, and responsibilities to the Congress. The application of that Act to the Library is not to be inferred, nor should this subpart be considered as conferring on any member of the public a right under that Act of access to or information from the records of the Library. Nothing in this subpart modifies current instructions and practices in the Library with respect to handling Congressional correspondence.

(b) The Copyright Office, although a service unit of the Library, is by law (17 U.S.C. 701) subject to the provisions of the Freedom of Information Act, as amended, only for purposes of actions taken under the copyright law. The Copyright Office has published its own regulation with respect to the general availability of information (*see* 37 CFR 201.2) and requests for copyright records made pursuant to the Freedom of Information Act (*see* 37 CFR 203.1 *et seq.*) and the Privacy Act (*see* 37 CFR 204.1 *et seq.*).

§ 703.2 Policy.

(a) Subject to limitations set out in this part, Library of Congress records shall be available as hereinafter provided and shall be furnished as promptly as possible within the Library to

any member of the public at appropriate places and times and for an appropriate fee, if any.

(b) The Library shall not provide records from its files that originate in another federal agency or non-federal organization to persons who may not be entitled to obtain the records from the originator. In such instances, the Library shall refer requesters to the agency or organization that originated the records.

(c) In order to avoid disruption of work in progress, and in the interests of fairness to those who might be adversely affected by the release of information which has not been fully reviewed to assure its accuracy and completeness, it is the policy of the Library not to provide records which are part of on-going reviews or other current projects. In response to such requests, the Library will inform the requester of the estimated completion date of the review or project so that the requester may then ask for the records. At that time, the Library may release the records unless the same are exempt from disclosure as identified in § 703.5.

§ 703.3 Administration responsibilities.

The administration of this part shall be the responsibility of the Chief, Office Systems Services (OSS), Library of Congress, 101 Independence Avenue, SE., Washington, DC 20540–9440, and to that end, the Chief may promulgate such supplemental rules or guidelines as may be necessary.

§ 703.4 Definitions.

(a) *Records* includes all books, papers, maps, photographs, reports, and other documentary materials, exclusive of materials in the Library's collections, regardless of physical form or characteristics, made or received and under the control of the Library in pursuance of law or in connection with the transaction of public business, and retained, or appropriate for retention, by the Library as evidence of the organization, functions, policies, decisions, procedures, operations, or other activities of the government or because of the informational value of data contained therein. The term refers only to such items in being and under the control of the Library. It does not include the compiling or procuring of a record, nor does the term include objects or articles, such as furniture, paintings, sculpture, three-dimensional models, structures, vehicles, and equipment.

(b) *Identifiable* means a reasonably specific description of a particular record sought, such as the date of the record, subject matter, agency or person involved, etc. which will permit location or retrieval of the record.

(c) *Records available to the public* means records which may be examined or copied or of which copies may be obtained, in accordance with this part, by the public or representatives of the press regardless of interest and without specific justification.

(d) *Disclose* or *disclosure* means making available for examination or copying, or furnishing a copy.

(e) *Person* includes an individual, partnership, corporation, association, or public or private organization other than a federal agency.

§ 703.5 Records exempt from disclosure.

(a) The public disclosure of Library records provided for by this part does not apply to records, or any parts thereof, within any of the categories set out below. Unless precluded by law, the Chief, OSS, nevertheless may release records within these categories, except for Congressional correspondence and other materials identified in § 703.5(b)(1), after first consulting with the General Counsel.

(b) Records exempt from disclosure under this part are the following:

(1) Congressional correspondence and other materials relating to work performed in response to or in anticipation of Congressional requests, unless authorized for release by officials of the Congress.

(2) Materials specifically authorized under criteria established by Executive Order to be withheld from public disclosure in the interest of national defense or foreign policy and that are properly classified pursuant to Executive Orders.

(3) Records related solely to the internal personnel rules and practices of the Library. This category includes, in

addition to internal matters of personnel administration, internal rules and practices which cannot be disclosed without prejudice to the effective performance of a Library function, such as guidelines and procedures used by auditors, investigators, or examiners in the Office of the Inspector General.

(4) Records specifically exempted from disclosure by statute, provided that such statute:

(i) Requires that the matters be withheld from the public in such a manner as to leave no discretion on the issue, or

(ii) Establishes particular criteria for withholding or refers to particular types of matters to be withheld.

(5) Records containing trade secrets and commercial or financial information obtained from a person as privileged or confidential. This exemption may include, but is not limited to, business sales statistics, inventories, customer lists, scientific or manufacturing processes or development information.

(6) Personnel and medical files and similar files the disclosure of which could constitute a clearly unwarranted invasion of personal privacy. This exemption includes all private or personal information contained in files compiled to evaluate candidates for security clearances.

(7) Materials and information contained in investigative or other records compiled for law enforcement purposes.

(8) Materials and information contained in files prepared in connection with government litigation and adjudicative proceedings, except for those portions of such files which are available by law to persons in litigation with the Library.

(9) Records having information contained in or related to examination, operation, or condition reports prepared by, on behalf of, or for the use of an agency responsible for the regulation or supervision of financial institutions.

(10) Inter-agency or intra-agency memoranda, letters or other materials that are part of the deliberative process, the premature disclosure of which would inhibit internal communications or be detrimental to a Library function (e.g., case files in the Manuscript Division).

(11) Records containing information customarily subject to protection as privileged in a court or other proceedings such as information protected by the doctor-patient, attorney work product, or attorney-client privilege.

(12) Information submitted by a person to the Library in confidence or which the Library has obligated itself not to disclose such as information received by the Office of the Inspector General through its hotline.

(13) Materials related to specific patron use of the Library's collections, resources, or facilities either on site or off site. This exemption includes:

(i) Reader Records. Library records which identify readers by name, such as registration records, reading room logs or registers, telephone inquiry logs, and charge slips, if retained for administrative purposes.

(ii) Use Records. Users of the Library are entitled to privacy with respect to their presence and use of the Library's facilities and resources. Records pertaining to the use of the Library and of Library collections and subjects of inquiry are confidential and are not to be disclosed either to other readers, to members of the staff who are not authorized, or to other inquirers including officials of law enforcement, intelligence, or investigative agencies, except pursuant to court order or administratively by order of the Librarian of Congress.

(c) Any reasonably segregable portion of a record shall be provided to anyone requesting such records after deletion of the portions which are exempt under this section. A portion of a record shall be considered reasonably segregable when segregation can produce an intelligible record which is not distorted out of context, does not contradict the record being withheld, and can reasonably provide all relevant information.

§ 703.6 Procedure for access to and copying of records.

(a) A request to inspect or obtain a copy of an identifiable record of the Library of Congress shall be submitted in writing to the Chief, OSS, Library of Congress, 101 Independence Avenue,

SE., Washington, DC 20540–9440, who shall promptly record and process the request.

(b) Requests for records shall be specific and shall identify the precise records or materials that are desired by name, date, number, or other identifying data sufficient to allow the OSS staff to locate, retrieve, and prepare the record for inspection or copying and to delete exempted matter where appropriate to do so. Blanket or generalized requests (such as ''all matters relating to'' a general subject) shall not be honored and shall be returned to the requester.

(c) Records shall be available for inspection and copying in person during business hours.

(d) Records in media other than print (e.g., microforms and machine-readable media) shall be available for inspection in the medium in which they exist. Copies of records in machine-readable media shall be made in media determined by the Chief, OSS.

(e) Library staff shall respond to requests with reasonable dispatch. Use of a record by the Library or Library employees, however, shall take precedence over any request. Under no circumstances shall official records be removed from Library control without the written authorization of the Librarian.

(f) The Chief, OSS, shall make the initial determination on whether:

(1) The record described in a request can be identified and located pursuant to a reasonable search, and

(2) The record (or portions thereof) may be made available or withheld from disclosure under the provisions of this part. In making the initial determinations, the Chief shall consult with any unit in the Library having a continuing substantial interest in the record requested. Where the Chief finds no valid objection or doubt as to the propriety of making the requested record available, the Chief shall honor the request upon payment of prescribed fees, if any are required by § 703.8.

(g) If the Chief, OSS, determines that a requested record should be withheld, the Chief shall inform the requester in writing that the request has been denied; shall identify the material withheld; and shall explain the basis for the denial. The Chief shall inform the requester that further consideration of the denied request may be obtained by a letter to the General Counsel setting out the basis for the belief that the denial of the request was unwarranted.

(h) The General Counsel shall make the final determination on any request for reconsideration and shall notify the requester in writing of that determination. The decision of the General Counsel shall be the final administrative review within the Library.

(1) If the General Counsel's decision reverses in whole or in part the initial determination by the Chief, OSS, the Chief shall make the requested record, or parts thereof, available to the requester, subject to the provisions of § 703.8.

(2) If the General Counsel's decision sustains in whole or in part the initial determination by the Chief, OSS, the General Counsel shall explain the basis on which the record, or portions thereof, will not be made available.

§ 703.7 Public Reading Facility.

(a) The Chief, OSS, shall maintain a reading facility for the public inspection and copying of Library records. This facility shall be open to the public from 8:30 a.m. to 4:30 p.m., except Saturdays, Sundays, holidays, and such other times as the Library shall be closed to the public.

(b) The General Counsel shall advise the Chief, OSS, of the records to be available in the public reading facility following consultation with the Library managers who may be concerned.

§ 703.8 Fees and charges.

(a) The Library will charge no fees for:

(1) Access to or copies of records under the provisions of this part when the direct search and reproduction costs are less than $10.

(2) Records requested which are not found or which are determined to be exempt under the provisions of this part.

(3) Staff time spent in resolving any legal or policy questions pertaining to a request.

(4) Copies of records, including those certified as true copies, that are furnished for official use to any officer or employee of the federal government.

(5) Copies of pertinent records furnished to a party having a direct and immediate interest in a matter pending before the Library, when furnishing such copies is necessary or desirable to the performance of a Library function.

(b) When the costs for services are $10 or more, the Chief, OSS, shall assess and collect the fees and charges set out in appendix A to this part for the direct costs of search and reproduction of records available to the public.

(c) The Chief, OSS, is authorized to waive fees and charges, in whole or in part, where it is determined that the public interest is best served to do so, because waiver is likely to contribute significantly to public understanding of the operations or activities of the government and is not primarily in the commercial interest of the requester. Persons seeking a waiver or reduction of fees may be required to submit a written statement setting forth the intended purpose for which the records are requested or otherwise indicate how disclosure will primarily benefit the public and, in appropriate cases, explain why the volume of records requested is necessary. Determinations made pursuant to the authority set out herein are solely within the discretion of the Chief, OSS.

(d) Fees and charges for services identified in the appendix to this part shall be paid in full by the requester before the records are delivered. Payment shall be made in U.S. funds by personal check, money order, or bank draft made payable to the Library of Congress. The Chief, OSS, shall remit all fees collected to the Director, Financial Services, who shall cause the same to be credited to appropriate accounts or deposited with the U.S. Treasury as miscellaneous receipts.

(e) The Chief, OSS, shall notify a requester and may require an advance deposit where the anticipated fees will exceed $50.

APPENDIX A TO SUBPART A OF PART 703—FEES AND CHARGES FOR SERVICES PROVIDED TO REQUESTERS OF RECORDS

(a) Searches.

(1) There is no charge for searches of less than one hour.

(2) Fees charged for searches of one hour or more are based on prevailing rates. Currently, those charges are:

(i) Personnel searches (clerical): $15 per hour.

(ii) Personnel searches (professional): $25 per hour.

(iii) Reproduction costs: $.50 per page.

(iv) Shipping and mailing fees: variable.

(3) In situations involving the use of computers to locate and extract the requested information, charges will be based on the direct cost to the Library, including labor, material, and computer time.

(b) *Duplication of Records.* Fees charged for the duplication of records shall be according to the prevailing rates established by the Library's Photoduplication Service, or in the case of machine media duplication, by the Resources Management Staff, Information Technology Services.

(c) *Certifications.* The fee charges for certification of a record as authentic or a true copy shall be $10.00 for each certificate.

(d) *Other Charges.* When no specific fee has been established for a service required to meet the request for records, the Chief, OSS, shall establish an appropriate fee based on direct costs in accordance with the Office of Management and Budget Circular No. A–25.

Subpart B—Testimony by Employees and Production of Documents in Certain Legal Proceedings Where the Library Is Not a Party

§ 703.15 Purpose and scope of this subpart.

This subpart sets forth the policy and procedures of the Library of Congress regarding, first, the testimony, as witnesses in legal proceedings where the Library is not a party, of employees and former employees concerning information acquired in the course of performing official duties or because of the employee's official relationship with the Library of Congress, and second, the production or disclosure of information contained in Library of Congress documents for use in legal proceedings where the Library is not a party, pursuant to a request, order, or

subpoena (collectively referred to in this subpart as a ''demand'').

(a) This subpart applies to:

(1) State court proceedings (including grand jury proceedings);

(2) Federal court proceedings; and

(3) State and local legislative and administrative proceedings.

(b) This subpart does not apply to:

(1) Matters that are not related to the Library of Congress but relate solely to an employee's personal dealings;

(2) Congressional demands for testimony or documents;

(3) Any demand relating to activity within the scope of Title 17 of the United States Code (the Copyright Act and related laws). These are governed by Copyright Office regulations, which provide for different procedures and for service on the General Counsel of the Copyright Office. *See* 37 CFR 201.1, sec. 203, sec. 204, and sec. 205.

(c) The purpose of this subpart is to ensure that employees' official time is used only for official purposes, to maintain the impartiality of the Library of Congress among private litigants, to ensure that public funds are not used for private purposes, to ensure the protection of Congress' interests, and to establish centralized procedures for deciding whether or not to approve testimony or the production of documents.

§ 703.16 Policy on presentation of testimony and production of documents.

No Library of Congress employee may provide testimony or produce documents in any proceeding to which this part applies concerning information acquired in the course of performing official duties or because of the employee's official relationship with the Library of Congress, unless authorized by the General Counsel or his/her designee, or the Director of the Congressional Research Service (CRS) with respect to records and testimony relating to CRS's work for Congress, or the Law Librarian for records and testimony relating to the Law Library's work for Congress or materials prepared for other federal agencies covered by evidentiary privileges. The aforementioned officials (hereinafter ''deciding officials'') will consider and act upon demands under this part with due regard for the interests of Congress, where appropriate, statutory requirements, the Library's interests, and the public interest, taking into account factors such as applicable privileges and immunities, including the deliberative process privilege and the speech or debate clause, the need to conserve the time of employees for conducting official business, the need to avoid spending the time and money of the United States for private purposes, the need to maintain impartiality among private litigants in cases where a substantial government interest is not involved, the established legal standards for determining whether or not justification exists for the disclosure of confidential information and records, and any other purpose that the deciding official deems to be in the interest of Congress or the Library of Congress.

§ 703.17 Procedures when testimony and/or documents are demanded.

A demand for testimony and/or documents by a Library employee must be in writing, must state the nature of the requested testimony and/or specify documents, and must meet the requirements of § 703.15. A demand must also show that the desired testimony or document is not reasonably available from any other source and must show that no document could be provided and used in lieu of testimony. When an employee of the Library receives such a request the employee will immediately forward it, with the recommendation of the employee's supervisors, to the appropriate deciding official under § 703.22 of this part. The deciding official, in consultation with the appropriate offices of the Library or congressional offices, will determine whether or not compliance with the request would be appropriate and will respond as soon as practicable.

§ 703.18 Procedures when an employee's appearance is demanded or documents are demanded.

(a) If the deciding official has not acted by the return date on a subpoena, the employee must appear at the stated time and place (unless advised by the deciding official that the subpoena was not validly issued or served or that

the subpoena has been withdrawn) and inform the court (or other interested parties) that the demand has been or is being, as the case may be, referred for the prompt consideration of the appropriate Library or congressional officials and shall respectfully request the court (or other authority) to stay the demand pending receipt of the requested instructions.

(b) If the deciding official has denied approval to comply with the subpoena, and the court or authority rules that the demand must be complied with irrespective of such a denial, the employee upon whom such a demand has been made shall produce a copy of this Part and shall respectfully refuse to provide any testimony or produce any documents. *United States ex rel. Touhy* v. *Ragen,* 340 U.S. 462 (1951).

(c) The deciding official, as appropriate, will request the assistance of the Department of Justice or the U.S. Attorney's Office or congressional officials where necessary to represent the interests of the Library, the Congress, and the employee in any of the foregoing proceedings.

§ 703.19 Requests for authenticated copies of Library documents.

Requests for authenticated copies of Library documents for purposes of admissibility under 28 U.S.C. 1733 and Rule 44 of the Federal Rules of Civil Procedure will be granted for documents that would otherwise be released pursuant to the Library's Regulations governing the release of information. The advice of the appropriate deciding official should be obtained concerning the proper form of authentication and information as to the proper person having custody of the record.

§ 703.20 File copies.

The Office of the General Counsel will maintain the official file of copies of all demands served on the Library and deciding officials' responses.

§ 703.21 Effect of this part.

This part is intended only to provide guidance for the internal operations of the Library of Congress and is not intended to, and does not, and may not, be relied upon to create any right or benefit, substantive or procedural, enforceable at law by a party against the Library of Congress or the United States.

§ 703.22 Where to serve demands.

Requesting parties must serve subpoenas:

(a) For Congressional Research Service matters: Director, Congressional Research Service, LM 203, Library of Congress, Washington, DC 20540.

(b) For Law Library matters: Law Librarian, LM 240, Library of Congress, Washington, DC 20540.

(c) For all other matters: General Counsel, LM 601, Library of Congress, Washington, DC 20540.

PART 704—NATIONAL FILM REGISTRY OF THE LIBRARY OF CONGRESS

§ 704.1 Films selected for inclusion in the National Film Registry.

After the reauthorization of the National Film Registry Act, only the list of films selected for the year of publication will be printed. For a complete list of films included in the National Film Registry, see *http://lcweb.loc.gov/film/nfrchron.html.*

AUTHORITY: Pub. L. 102–307, 106 Stat. 267 (2 U.S.C. 179).

[69 FR 39843, July 1, 2004]

PART 705—REPRODUCTION, COMPILATION, AND DISTRIBUTION OF NEWS TRANSMISSIONS UNDER THE PROVISIONS OF THE AMERICAN TELEVISION AND RADIO ARCHIVES ACT

Sec.

705.1 Scope and purpose of this part.
705.2 Authority.
705.3 Definitions.
705.4 Reproduction.
705.5 Disposition and use of copies and phonorecords by the Library of Congress.
705.6 Compilation.
705.7 Distribution.
705.8 Agreements modifying the terms of this part.

AUTHORITY: 2 U.S.C. 136, and 170.

SOURCE: 69 FR 39843, July 1, 2004, unless otherwise noted.

§ 705.1 Scope and purpose of this part.

The purpose of this part is to implement certain provisions of the American Television and Radio Archives Act, 2 U.S.C. 170. Specifically, this part prescribes rules pertaining to the reproduction, compilation, and distribution by the Library of Congress, under section 170(b) of title 2 of the United States Code, of television and radio transmission programs consisting of regularly scheduled newscasts or on-the-spot coverage of news events.

§ 705.2 Authority.

Section 170(b) of Title 2 authorizes the Librarian, with respect to a transmission program which consists of a regularly scheduled newscast or on-the-spot coverage of news events, to prescribe by regulation standards and conditions to reproduce, compile, and distribute such a program as more particularly specified in the statute.

§ 705.3 Definitions.

For purposes of this part:

(a) The terms copies, fixed, phonorecords and transmission program, and their variant forms, have the meanings given to them in section 101 of title 17 of the United States Code. For the purpose of this part, the term transmission includes transmission via the Internet, cable, broadcasting, and satellite systems, and via any other existing or future devices or processes for the communication of a performance or display whereby images or sounds are received beyond the place from which they are sent. 17 U.S.C. 101; H.R. Rep. No. 94–1476, at 64 (1976).

(b) The term regularly scheduled newscasts means transmission programs in any format that report on current events, regardless of quality, subject matter, or significance, and that air on a periodic basis, (including but not limited to daily, weekly, or quarterly), or on an occasional basis, but not on a special, one-time basis. The term on-the-spot coverage of news events refers to transmission programs in any format that report on reasonably recent current events, regardless of quality, subject matter, or significance, and that are aired in a timely manner but not necessarily contemporaneously with the recording of the events.

(c) The term staff for the purpose of this part includes both Library employees and contractors.

§ 705.4 Reproduction.

(a) Library of Congress staff acting under the general authority of the Librarian of Congress may reproduce fixations of television and radio transmission programs consisting of regularly scheduled newscasts or on-the-spot coverage of news events directly from transmissions to the public in the United States in accordance with section 170(b) of title 2 of the United States Code. Recording may be accomplished in the same or another tangible form as the original transmission. The choice of programs selected for recording will be made consistent with the purpose of, and based on the criteria set forth in, the American Television and Radio Archives Act at 2 U.S.C. 170(a), and on Library of Congress acquisition policies in effect at the time of recording.

(b) Specific notice of an intent to copy a transmission program will ordinarily not be given. In general, the Library of Congress will seek to copy off-the-air selected portions of the programming transmitted by both noncommercial educational broadcast stations as defined in section 397 of title 47 of the United States Code, and by commercial broadcast stations. Upon written request addressed to the Chief, Motion Picture, Broadcasting and Recorded Sound Division by a broadcast station or other owner of the right of transmission, the Library of Congress will inform the requestor whether a particular transmission program has been copied by the Library.

§ 705.5 Disposition and use of copies and phonorecords by the Library of Congress.

(a) All copies and phonorecords acquired under this part will be maintained by the Motion Picture, Broadcasting and Recorded Sound Division of the Library of Congress. The Library may make such copies or phonorecords of a program as are necessary for purposes of preservation, security, and, as specified in § 705.7, distribution.

(b) To the extent that the Library of Congress's use of copies and phonorecords acquired under this part is not subject to the provisions of the American Television and Radio Archives Act (section 170 of title 2 of the United States Code) and this part, such use shall be subject to the restrictions concerning copying and access found in Library of Congress Regulation 818–17, ''Policies Governing the Use and Availability of Motion Pictures and Other Audiovisual Works in the Collections of the Library of Congress,'' and Library of Congress Regulation 818–18.1, ''Recorded Sound Listening and Duplication Services'' available from the Office of the General Counsel, Library of Congress, Washington, DC 20540–1050. Such use shall also be governed by the Copyright Act of 1976, as amended.

§ 705.6 Compilation.

(a) Library of Congress staff acting under the general authority of the Librarian of Congress may compile, without abridgement or any other editing, portions of recordings created pursuant to § 705.4 according to subject matter, and may reproduce such compilations for purposes of preservation, security, or distribution as permitted under § 705.7 below.

(b) Compilations shall be organized, to the greatest extent possible, in chronological order, and shall include the entirety of any particular news segment.

(c) No compilation by the Librarian shall be deemed for any purpose or proceeding to be an official determination of the subject matter covered by such compilation.

§ 705.7 Distribution.

(a) Library staff acting under the general authority of the Librarian of Congress may distribute a reproduction of a transmission program or a compilation of transmission programs made under this part, by loan to a researcher, provided that the researcher indicates the particular segments of the news broadcasts or compilations that he or she wishes to review, on the basis of an index or other finding aid prepared by the Librarian; and for deposit in a library or archives which meets the requirements of section 108(a) of title 17 of the United States Code.

(b) Library staff will advise all recipients of such reproductions that such distribution shall be only for the purposes of research and not for further reproduction or performance, and that any use in excess of that permitted by the American Television and Radio Archives Act (section 170 of title 2 of the United States Code), title 17 of the United States Code, and this part may violate copyrights or other rights.

§ 705.8 Agreements modifying the terms of this part.

(a) The Library of Congress may, at its sole discretion, enter into an agreement whereby the provision of copies or phonorecords of transmission programs of regularly scheduled newscasts or on-the-spot coverage of news events on terms different from those contained in this part is authorized.

(b) Any such agreement may be terminated without notice by the Library of Congress.

PARTS 706–799 [RESERVED]

CHAPTER VIII—ADVISORY COUNCIL ON HISTORIC PRESERVATION

Part		*Page*
800	Protection of historic properties	85
801	Historic preservation requirements of the Urban Development Action Grant Program	110
805	Procedures for implementation of National Environmental Policy Act	123
810	Freedom of Information Act regulations	125
811	Employee responsibilities and conduct	127
812	Enforcement of nondiscrimination on the basis of handicap in programs or activities conducted by the Advisory Council on Historic Preservation	127
813–899	[Reserved]	

PART 800—PROTECTION OF HISTORIC PROPERTIES

Subpart A—Purposes and Participants

Sec.
800.1 Purposes.
800.2 Participants in the Section 106 process.

Subpart B—The Section 106 Process

800.3 Initiation of the section 106 process.
800.4 Identification of historic properties.
800.5 Assessment of adverse effects.
800.6 Resolution of adverse effects.
800.7 Failure to resolve adverse effects.
800.8 Coordination with the National Environmental Policy Act.
800.9 Council review of Section 106 compliance.
800.10 Special requirements for protecting National Historic Landmarks.
800.11 Documentation standards.
800.12 Emergency situations.
800.13 Post-review discoveries.

Subpart C—Program Alternatives

800.14 Federal agency program alternatives.
800.15 Tribal, State, and local program alternatives. [Reserved]
800.16 Definitions.
APPENDIX A TO PART 800—CRITERIA FOR COUNCIL INVOLVEMENT IN REVIEWING INDIVIDUAL SECTION 106 CASES

AUTHORITY: 16 U.S.C. 470s.

SOURCE: 65 FR 77725, Dec. 12, 2000, unless otherwise noted.

Subpart A—Purposes and Participants

§ 800.1 Purposes.

(a) *Purposes of the section 106 process.* Section 106 of the National Historic Preservation Act requires Federal agencies to take into account the effects of their undertakings on historic properties and afford the Council a reasonable opportunity to comment on such undertakings. The procedures in this part define how Federal agencies meet these statutory responsibilities. The section 106 process seeks to accommodate historic preservation concerns with the needs of Federal undertakings through consultation among the agency official and other parties with an interest in the effects of the undertaking on historic properties, commencing at the early stages of project planning. The goal of consultation is to identify historic properties potentially affected by the undertaking, assess its effects and seek ways to avoid, minimize or mitigate any adverse effects on historic properties.

(b) *Relation to other provisions of the act.* Section 106 is related to other provisions of the act designed to further the national policy of historic preservation. References to those provisions are included in this part to identify circumstances where they may affect actions taken to meet section 106 requirements. Such provisions may have their own implementing regulations or guidelines and are not intended to be implemented by the procedures in this part except insofar as they relate to the section 106 process. Guidelines, policies, and procedures issued by other agencies, including the Secretary, have been cited in this part for ease of access and are not incorporated by reference.

(c) *Timing.* The agency official must complete the section 106 process ''prior to the approval of the expenditure of any Federal funds on the undertaking or prior to the issuance of any license.'' This does not prohibit agency official from conducting or authorizing nondestructive project planning activities before completing compliance with section 106, provided that such actions do not restrict the subsequent consideration of alternatives to avoid, minimize or mitigate the undertaking's adverse effects on historic properties. The agency official shall ensure that the section 106 process is initiated early in the undertaking's planning, so that a broad range of alternatives may be considered during the planning process for the undertaking.

§ 800.2 Participants in the Section 106 process.

(a) *Agency official.* It is the statutory obligation of the Federal agency to fulfill the requirements of section 106 and to ensure that an agency official with jurisdiction over an undertaking takes legal and financial responsibility for section 106 compliance in accordance with subpart B of this part. The agency official has approval authority for the undertaking and can commit the Federal agency to take appropriate action

for a specific undertaking as a result of section 106 compliance. For the purposes of subpart C of this part, the agency official has the authority to commit the Federal agency to any obligation it may assume in the implementation of a program alternative. The agency official may be a State, local, or tribal government official who has been delegated legal responsibility for compliance with section 106 in accordance with Federal law.

(1) *Professional standards.* Section 112(a)(1)(A) of the act requires each Federal agency responsible for the protection of historic resources, including archeological resources, to ensure that all actions taken by employees or contractors of the agency shall meet professional standards under regulations developed by the Secretary.

(2) *Lead Federal agency.* If more than one Federal agency is involved in an undertaking, some or all the agencies may designate a lead Federal agency, which shall identify the appropriate official to serve as the agency official who shall act on their behalf, fulfilling their collective responsibilities under section 106. Those Federal agencies that do not designate a lead Federal agency remain individually responsible for their compliance with this part.

(3) *Use of contractors.* Consistent with applicable conflict of interest laws, the agency official may use the services of applicants, consultants, or designees to prepare information, analyses and recommendations under this part. The agency official remains legally responsible for all required findings and determinations. If a document or study is prepared by a non-Federal party, the agency official is responsible for ensuring that its content meets applicable standards and guidelines.

(4) *Consultation.* The agency official shall involve the consulting parties described in paragraph (c) of this section in findings and determinations made during the section 106 process. The agency official should plan consultations appropriate to the scale of the undertaking and the scope of Federal involvement and coordinated with other requirements of other statutes, as applicable, such as the National Environmental Policy Act, the Native American Graves Protection and Repatriation Act, the American Indian Religious Freedom Act, the Archeological Resources Protection Act, and agency-specific legislation. The Council encourages the agency official to use to the extent possible existing agency procedures and mechanisms to fulfill the consultation requirements of this part.

(b) *Council.* The Council issues regulations to implement section 106, provides guidance and advice on the application of the procedures in this part, and generally oversees the operation of the section 106 process. The Council also consults with and comments to agency officials on individual undertakings and programs that affect historic properties.

(1) *Council entry into the section 106 process.* When the Council determines that its involvement is necessary to ensure that the purposes of section 106 and the act are met, the Council may enter the section 106 process. Criteria guiding Council decisions to enter the section 106 process are found in appendix A to this part. The Council will document that the criteria have been met and notify the parties to the section 106 process as required by this part.

(2) *Council assistance.* Participants in the section 106 process may seek advice, guidance and assistance from the Council on the application of this part to specific undertakings, including the resolution of disagreements, whether or not the Council is formally involved in the review of the undertaking. If questions arise regarding the conduct of the section 106 process, participants are encouraged to obtain the Council's advice on completing the process.

(c) *Consulting parties.* The following parties have consultative roles in the section 106 process.

(1) *State historic preservation officer.* (i) The State historic preservation officer (SHPO) reflects the interests of the State and its citizens in the preservation of their cultural heritage. In accordance with section 101(b)(3) of the act, the SHPO advises and assists Federal agencies in carrying out their section 106 responsibilities and cooperates with such agencies, local governments and organizations and individuals to

ensure that historic properties are taking into consideration at all levels of planning and development.

(ii) If an Indian tribe has assumed the functions of the SHPO in the section 106 process for undertakings on tribal lands, the SHPO shall participate as a consulting party if the undertaking takes place on tribal lands but affects historic properties off tribal lands, if requested in accordance with § 800.3(c)(1), or if the Indian tribe agrees to include the SHPO pursuant to § 800.3(f)(3).

(2) *Indian tribes and Native Hawaiian organizations.* (i) *Consultation on tribal lands.* (A) *Tribal historic preservation officer.* For a tribe that has assumed the responsibilities of the SHPO for section 106 on tribal lands under section 101(d)(2) of the act, the tribal historic preservation officer (THPO) appointed or designated in accordance with the act is the official representative for the purposes of section 106. The agency official shall consult with the THPO in lieu of the SHPO regarding undertakings occurring on or affecting historic properties on tribal lands.

(B) *Tribes that have not assumed SHPO functions.* When an Indian tribe has not assumed the responsibilities of the SHPO for section 106 on tribal lands under section 101(d)(2) of the act, the agency official shall consult with a representative designated by such Indian tribe in addition to the SHPO regarding undertakings occurring on or affecting historic properties on its tribal lands. Such Indian tribes have the same rights of consultation and concurrence that the THPOs are given throughout subpart B of this part, except that such consultations shall be in addition to and on the same basis as consultation with the SHPO.

(ii) *Consultation on historic properties of significance to Indian tribes and Native Hawaiian organizations.* Section 101(d)(6)(B) of the act requires the agency official to consult with any Indian tribe or Native Hawaiian organization that attaches religious and cultural significance to historic properties that may be affected by an undertaking. This requirement applies regardless of the location of the historic property. Such Indian tribe or Native Hawaiian organization shall be a consulting party.

(A) The agency official shall ensure that consultation in the section 106 process provides the Indian tribe or Native Hawaiian organization a reasonable opportunity to identify its concerns about historic properties, advise on the identification and evaluation of historic properties, including those of traditional religious and cultural importance, articulate its views on the undertaking's effects on such properties, and participate in the resolution of adverse effects. It is the responsibility of the agency official to make a reasonable and good faith effort to identify Indian tribes and Native Hawaiian organizations that shall be consulted in the section 106 process. Consultation should commence early in the planning process, in order to identify and discuss relevant preservation issues and resolve concerns about the confidentiality of information on historic properties.

(B) The Federal Government has a unique legal relationship with Indian tribes set forth in the Constitution of the United States, treaties, statutes, and court decisions. Consultation with Indian tribes should be conducted in a sensitive manner respectful of tribal sovereignty. Nothing in this part alters, amends, repeals, interprets, or modifies tribal sovereignty, any treaty rights, or other rights of an Indian tribe, or preempts, modifies, or limits the exercise of any such rights.

(C) Consultation with an Indian tribe must recognize the government-to-government relationship between the Federal Government and Indian tribes. The agency official shall consult with representatives designated or identified by the tribal government or the governing body of a Native Hawaiian organization. Consultation with Indian tribes and Native Hawaiian organizations should be conducted in a manner sensitive to the concerns and needs of the Indian tribe or Native Hawaiian organization.

(D) When Indian tribes and Native Hawaiian organizations attach religious and cultural significance to historic properties off tribal lands, section 101(d)(6)(B) of the act requires Federal agencies to consult with such Indian

tribes and Native Hawaiian organizations in the section 106 process. Federal agencies should be aware that frequently historic properties of religious and cultural significance are located on ancestral, aboriginal, or ceded lands of Indian tribes and Native Hawaiian organizations and should consider that when complying with the procedures in this part.

(E) An Indian tribe or a Native Hawaiian organization may enter into an agreement with an agency official that specifies how they will carry out responsibilities under this part, including concerns over the confidentiality of information. An agreement may cover all aspects of tribal participation in the section 106 process, provided that no modification may be made in the roles of other parties to the section 106 process without their consent. An agreement may grant the Indian tribe or Native Hawaiian organization additional rights to participate or concur in agency decisions in the section 106 process beyond those specified in subpart B of this part. The agency official shall provide a copy of any such agreement to the Council and the appropriate SHPOs.

(F) An Indian tribe that has not assumed the responsibilities of the SHPO for section 106 on tribal lands under section 101(d)(2) of the act may notify the agency official in writing that it is waiving its rights under § 800.6(c)(1) to execute a memorandum of agreement.

(3) *Representatives of local governments.* A representative of a local government with jurisdiction over the area in which the effects of an undertaking may occur is entitled to participate as a consulting party. Under other provisions of Federal law, the local government may be authorized to act as the agency official for purposes of section 106.

(4) *Applicants for Federal assistance, permits, licenses, and other approvals.* An applicant for Federal assistance or for a Federal permit, license, or other approval is entitled to participate as a consulting party as defined in this part. The agency official may authorize an applicant or group of applicants to initiate consultation with the SHPO/THPO and others, but remains legally responsible for all findings and determinations charged to the agency official. The agency official shall notify the SHPO/THPO when an applicant or group of applicants is so authorized. A Federal agency may authorize all applicants in a specific program pursuant to this section by providing notice to all SHPO/THPOs. Federal agencies that provide authorizations to applicants remain responsible for their government-to-government relationships with Indian tribes.

(5) *Additional consulting parties.* Certain individuals and organizations with a demonstrated interest in the undertaking may participate as consulting parties due to the nature of their legal or economic relation to the undertaking or affected properties, or their concern with the undertaking's effects on historic properties.

(d) *The public*—(1) *Nature of involvement.* The views of the public are essential to informed Federal decisionmaking in the section 106 process. The agency official shall seek and consider the views of the public in a manner that reflects the nature and complexity of the undertaking and its effects on historic properties, the likely interest of the public in the effects on historic properties, confidentiality concerns of private individuals and businesses, and the relationship of the Federal involvement to the undertaking.

(2) *Providing notice and information.* The agency official must, except where appropriate to protect confidentiality concerns of affected parties, provide the public with information about an undertaking and its effects on historic properties and seek public comment and input. Members of the public may also provide views on their own initiative for the agency official to consider in decisionmaking.

(3) *Use of agency procedures.* The agency official may use the agency's procedures for public involvement under the National Environmental Policy Act or other program requirements in lieu of public involvement requirements in subpart B of this part, if they provide adequate opportunities for public involvement consistent with this subpart.

Subpart B—The section 106 Process

§ 800.3 Initiation of the section 106 process.

(a) *Establish undertaking.* The agency official shall determine whether the proposed Federal action is an undertaking as defined in § 800.16(y) and, if so, whether it is a type of activity that has the potential to cause effects on historic properties.

(1) *No potential to cause effects.* If the undertaking is a type of activity that does not have the potential to cause effects on historic properties, assuming such historic properties were present, the agency official has no further obligations under section 106 or this part.

(2) *Program alternatives.* If the review of the undertaking is governed by a Federal agency program alternative established under § 800.14 or a programmatic agreement in existence before January 11, 2001, the agency official shall follow the program alternative.

(b) *Coordinate with other reviews.* The agency official should coordinate the steps of the section 106 process, as appropriate, with the overall planning schedule for the undertaking and with any reviews required under other authorities such as the National Environmental Policy Act, the Native American Graves Protection and Repatriation Act, the American Indian Religious Freedom Act, the Archeological Resources Protection Act, and agency-specific legislation, such as section 4(f) of the Department of Transportation Act. Where consistent with the procedures in this subpart, the agency official may use information developed for other reviews under Federal, State, or tribal law to meet the requirements of section 106.

(c) *Identify the appropriate SHPO and/or THPO.* As part of its initial planning, the agency official shall determine the appropriate SHPO or SHPOs to be involved in the section 106 process. The agency official shall also determine whether the undertaking may occur on or affect historic properties on any tribal lands and, if so, whether a THPO has assumed the duties of the SHPO. The agency official shall then initiate consultation with the appropriate officer or officers.

(1) *Tribal assumption of SHPO responsibilities.* Where an Indian tribe has assumed the section 106 responsibilities of the SHPO on tribal lands pursuant to section 101(d)(2) of the act, consultation for undertakings occurring on tribal land or for effects on tribal land is with the THPO for the Indian tribe in lieu of the SHPO. Section 101(d)(2)(D)(iii) of the act authorizes owners of properties on tribal lands which are neither owned by a member of the tribe nor held in trust by the Secretary for the benefit of the tribe to request the SHPO to participate in the section 106 process in addition to the THPO.

(2) *Undertakings involving more than one State.* If more than one State is involved in an undertaking, the involved SHPOs may agree to designate a lead SHPO to act on their behalf in the section 106 process, including taking actions that would conclude the section 106 process under this subpart.

(3) *Conducting consultation.* The agency official should consult with the SHPO/THPO in a manner appropriate to the agency planning process for the undertaking and to the nature of the undertaking and its effects on historic properties.

(4) *Failure of the SHPO/THPO to respond.* If the SHPO/THPO fails to respond within 30 days of receipt of a request for review of a finding or determination, the agency official may either proceed to the next step in the process based on the finding or determination or consult with the Council in lieu of the SHPO/THPO. If the SHPO/THPO re-enters the Section 106 process, the agency official shall continue the consultation without being required to reconsider previous findings or determinations.

(d) *Consultation on tribal lands.* Where the Indian tribe has not assumed the responsibilities of the SHPO on tribal lands, consultation with the Indian tribe regarding undertakings occurring on such tribe's lands or effects on such tribal lands shall be in addition to and on the same basis as consultation with the SHPO. If the SHPO has withdrawn from the process, the agency official may complete the section 106 process

with the Indian tribe and the Council, as appropriate. An Indian tribe may enter into an agreement with a SHPO or SHPOs specifying the SHPO's participation in the section 106 process for undertakings occurring on or affecting historic properties on tribal lands.

(e) *Plan to involve the public.* In consultation with the SHPO/THPO, the agency official shall plan for involving the public in the section 106 process. The agency official shall identify the appropriate points for seeking public input and for notifying the public of proposed actions, consistent with § 800.2(d).

(f) *Identify other consulting parties.* In consultation with the SHPO/THPO, the agency official shall identify any other parties entitled to be consulting parties and invite them to participate as such in the section 106 process. The agency official may invite others to participate as consulting parties as the section 106 process moves forward.

(1) *Involving local governments and applicants.* The agency official shall invite any local governments or applicants that are entitled to be consulting parties under § 800.2(c).

(2) *Involving Indian tribes and Native Hawaiian organizations.* The agency official shall make a reasonable and good faith effort to identify any Indian tribes or Native Hawaiian organizations that might attach religious and cultural significance to historic properties in the area of potential effects and invite them to be consulting parties. Such Indian tribe or Native Hawaiian organization that requests in writing to be a consulting party shall be one.

(3) *Requests to be consulting parties.* The agency official shall consider all written requests of individuals and organizations to participate as consulting parties and, in consultation with the SHPO/THPO and any Indian tribe upon whose tribal lands an undertaking occurs or affects historic properties, determine which should be consulting parties.

(g) *Expediting consultation.* A consultation by the agency official with the SHPO/THPO and other consulting parties may address multiple steps in §§ 800.3 through 800.6 where the agency official and the SHPO/THPO agree it is appropriate as long as the consulting parties and the public have an adequate opportunity to express their views as provided in § 800.2(d).

§ 800.4 Identification of historic properties.

(a) *Determine scope of identification efforts.* In consultation with the SHPO/THPO, the agency official shall:

(1) Determine and document the area of potential effects, as defined in § 800.16(d);

(2) Review existing information on historic properties within the area of potential effects, including any data concerning possible historic properties not yet identified;

(3) Seek information, as appropriate, from consulting parties, and other individuals and organizations likely to have knowledge of, or concerns with, historic properties in the area, and identify issues relating to the undertaking's potential effects on historic properties; and

(4) Gather information from any Indian tribe or Native Hawaiian organization identified pursuant to § 800.3(f) to assist in identifying properties, including those located off tribal lands, which may be of religious and cultural significance to them and may be eligible for the National Register, recognizing that an Indian tribe or Native Hawaiian organization may be reluctant to divulge specific information regarding the location, nature, and activities associated with such sites. The agency official should address concerns raised about confidentiality pursuant to § 800.11(c).

(b) *Identify historic properties.* Based on the information gathered under paragraph (a) of this section, and in consultation with the SHPO/THPO and any Indian tribe or Native Hawaiian organization that might attach religious and cultural significance to properties within the area of potential effects, the agency official shall take the steps necessary to identify historic properties within the area of potential effects.

(1) *Level of effort.* The agency official shall make a reasonable and good faith effort to carry out appropriate identification efforts, which may include background research, consultation,

oral history interviews, sample field investigation, and field survey. The agency official shall take into account past planning, research and studies, the magnitude and nature of the undertaking and the degree of Federal involvement, the nature and extent of potential effects on historic properties, and the likely nature and location of historic properties within the area of potential effects. The Secretary's standards and guidelines for identification provide guidance on this subject. The agency official should also consider other applicable professional, State, tribal, and local laws, standards, and guidelines. The agency official shall take into account any confidentiality concerns raised by Indian tribes or Native Hawaiian organizations during the identification process.

(2) *Phased identification and evaluation*. Where alternatives under consideration consist of corridors or large land areas, or where access to properties is restricted, the agency official may use a phased process to conduct identification and evaluation efforts. The agency official may also defer final identification and evaluation of historic properties if it is specifically provided for in a memorandum of agreement executed pursuant to § 800.6, a programmatic agreement executed pursuant to § 800.14(b), or the documents used by an agency official to comply with the National Environmental Policy Act pursuant to § 800.8. The process should establish the likely presence of historic properties within the area of potential effects for each alternative or inaccessible area through background research, consultation and an appropriate level of field investigation, taking into account the number of alternatives under consideration, the magnitude of the undertaking and its likely effects, and the views of the SHPO/THPO and any other consulting parties. As specific aspects or locations of an alternative are refined or access is gained, the agency official shall proceed with the identification and evaluation of historic properties in accordance with paragraphs (b)(1) and (c) of this section.

(c) *Evaluate historic significance*—(1) *Apply National Register criteria*. In consultation with the SHPO/THPO and any Indian tribe or Native Hawaiian organization that attaches religious and cultural significance to identified properties and guided by the Secretary's standards and guidelines for evaluation, the agency official shall apply the National Register criteria (36 CFR part 63) to properties identified within the area of potential effects that have not been previously evaluated for National Register eligibility. The passage of time, changing perceptions of significance, or incomplete prior evaluations may require the agency official to reevaluate properties previously determined eligible or ineligible. The agency official shall acknowledge that Indian tribes and Native Hawaiian organizations possess special expertise in assessing the eligibility of historic properties that may possess religious and cultural significance to them.

(2) *Determine whether a property is eligible*. If the agency official determines any of the National Register criteria are met and the SHPO/THPO agrees, the property shall be considered eligible for the National Register for section 106 purposes. If the agency official determines the criteria are not met and the SHPO/THPO agrees, the property shall be considered not eligible. If the agency official and the SHPO/THPO do not agree, or if the Council or the Secretary so request, the agency official shall obtain a determination of eligibility from the Secretary pursuant to 36 CFR part 63. If an Indian tribe or Native Hawaiian organization that attaches religious and cultural significance to a property off tribal lands does not agree, it may ask the Council to request the agency official to obtain a determination of eligibility.

(d) *Results of identification and evaluation*—(1) *No historic properties affected*. If the agency official finds that either there are no historic properties present or there are historic properties present but the undertaking will have no effect upon them as defined in § 800.16(i), the agency official shall provide documentation of this finding, as set forth in § 800.11(d), to the SHPO/THPO. The agency official shall notify all consulting parties, including Indian tribes and Native Hawaiian organizations, and make the documentation available

for public inspection prior to approving the undertaking.

(i) If the SHPO/THPO, or the Council if it has entered the section 106 process, does not object within 30 days of receipt of an adequately documented finding, the agency official's responsibilities under section 106 are fulfilled.

(ii) If the SHPO/THPO objects within 30 days of receipt of an adequately documented finding, the agency official shall either consult with the objecting party to resolve the disagreement, or forward the finding and supporting documentation to the Council and request that the Council review the finding pursuant to paragraphs (d)(1)(iv)(A) through (d)(1)(iv)(C) of this section. When an agency official forwards such requests for review to the Council, the agency official shall concurrently notify all consulting parties that such a request has been made and make the request documentation available to the public.

(iii) During the SHPO/THPO 30 day review period, the Council may object to the finding and provide its opinion regarding the finding to the agency official and, if the Council determines the issue warrants it, the head of the agency. A Council decision to provide its opinion to the head of an agency shall be guided by the criteria in appendix A to this part. The agency shall then proceed according to paragraphs (d)(1)(iv)(B) and (d)(1)(iv)(C) of this section.

(iv) (A) Upon receipt of the request under paragraph (d)(1)(ii) of this section, the Council will have 30 days in which to review the finding and provide the agency official and, if the Council determines the issue warrants it, the head of the agency with the Council's opinion regarding the finding. A Council decision to provide its opinion to the head of an agency shall be guided by the criteria in appendix A to this part. If the Council does not respond within 30 days of receipt of the request, the agency official's responsibilities under section 106 are fulfilled.

(B) The person to whom the Council addresses its opinion (the agency official or the head of the agency) shall take into account the Council's opinion before the agency reaches a final decision on the finding.

(C) The person to whom the Council addresses its opinion (the agency official or the head of the agency) shall then prepare a summary of the decision that contains the rationale for the decision and evidence of consideration of the Council's opinion, and provide it to the Council, the SHPO/THPO, and the consulting parties. The head of the agency may delegate his or her duties under this paragraph to the agency's senior policy official. If the agency official's initial finding will be revised, the agency official shall proceed in accordance with the revised finding. If the final decision of the agency is to affirm the initial agency finding of no historic properties affected, once the summary of the decision has been sent to the Council, the SHPO/THPO, and the consulting parties, the agency official's responsibilities under section 106 are fulfilled.

(D) The Council shall retain a record of agency responses to Council opinions on their findings of no historic properties affected. The Council shall make this information available to the public.

(2) *Historic properties affected*. If the agency official finds that there are historic properties which may be affected by the undertaking, the agency official shall notify all consulting parties, including Indian tribes or Native Hawaiian organizations, invite their views on the effects and assess adverse effects, if any, in accordance with § 800.5.

[65 FR 77725, Dec. 12, 2000, as amended at 69 FR 40553, July 6, 2004]

§ 800.5 Assessment of adverse effects.

(a) *Apply criteria of adverse effect*. In consultation with the SHPO/THPO and any Indian tribe or Native Hawaiian organization that attaches religious and cultural significance to identified historic properties, the agency official shall apply the criteria of adverse effect to historic properties within the area of potential effects. The agency official shall consider any views concerning such effects which have been provided by consulting parties and the public.

(1) *Criteria of adverse effect*. An adverse effect is found when an undertaking may alter, directly or indirectly, any of the characteristics of a

historic property that qualify the property for inclusion in the National Register in a manner that would diminish the integrity of the property's location, design, setting, materials, workmanship, feeling, or association. Consideration shall be given to all qualifying characteristics of a historic property, including those that may have been identified subsequent to the original evaluation of the property's eligibility for the National Register. Adverse effects may include reasonably foreseeable effects caused by the undertaking that may occur later in time, be farther removed in distance or be cumulative.

(2) *Examples of adverse effects.* Adverse effects on historic properties include, but are not limited to:

(i) Physical destruction of or damage to all or part of the property;

(ii) Alteration of a property, including restoration, rehabilitation, repair, maintenance, stabilization, hazardous material remediation, and provision of handicapped access, that is not consistent with the Secretary's standards for the treatment of historic properties (36 CFR part 68) and applicable guidelines;

(iii) Removal of the property from its historic location;

(iv) Change of the character of the property's use or of physical features within the property's setting that contribute to its historic significance;

(v) Introduction of visual, atmospheric or audible elements that diminish the integrity of the property's significant historic features;

(vi) Neglect of a property which causes its deterioration, except where such neglect and deterioration are recognized qualities of a property of religious and cultural significance to an Indian tribe or Native Hawaiian organization; and

(vii) Transfer, lease, or sale of property out of Federal ownership or control without adequate and legally enforceable restrictions or conditions to ensure long-term preservation of the property's historic significance.

(3) *Phased application of criteria.* Where alternatives under consideration consist of corridors or large land areas, or where access to properties is restricted, the agency official may use a phased process in applying the criteria of adverse effect consistent with phased identification and evaluation efforts conducted pursuant to § 800.4(b)(2).

(b) *Finding of no adverse effect.* The agency official, in consultation with the SHPO/THPO, may propose a finding of no adverse effect when the undertaking's effects do not meet the criteria of paragraph (a)(1) of this section or the undertaking is modified or conditions are imposed, such as the subsequent review of plans for rehabilitation by the SHPO/THPO to ensure consistency with the Secretary's standards for the treatment of historic properties (36 CFR part 68) and applicable guidelines, to avoid adverse effects.

(c) *Consulting party review.* If the agency official proposes a finding of no adverse effect, the agency official shall notify all consulting parties of the finding and provide them with the documentation specified in § 800.11(e). The SHPO/THPO shall have 30 days from receipt to review the finding.

(1) *Agreement with, or no objection to, finding.* Unless the Council is reviewing the finding pursuant to papagraph (c)(3) of this section, the agency official may proceed after the close of the 30 day review period if the SHPO/THPO has agreed with the finding or has not provided a response, and no consulting party has objected. The agency official shall then carry out the undertaking in accordance with paragraph (d)(1) of this section.

(2) *Disagreement with finding.* (i) If within the 30 day review period the SHPO/THPO or any consulting party notifies the agency official in writing that it disagrees with the finding and specifies the reasons for the disagreement in the notification, the agency official shall either consult with the party to resolve the disagreement, or request the Council to review the finding pursuant to paragraphs (c)(3)(i) and (c)(3)(ii) of this section. The agency official shall include with such request the documentation specified in § 800.11(e). The agency official shall also concurrently notify all consulting parties that such a submission has been made and make the submission documentation available to the public.

(ii) If within the 30 day review period the Council provides the agency official and, if the Council determines the issue warrants it, the head of the agency, with a written opinion objecting to the finding, the agency shall then proceed according to paragraph (c)(3)(ii) of this section. A Council decision to provide its opinion to the head of an agency shall be guided by the criteria in appendix A to this part.

(iii) The agency official should seek the concurrence of any Indian tribe or Native Hawaiian organization that has made known to the agency official that it attaches religious and cultural significance to a historic property subject to the finding. If such Indian tribe or Native Hawaiian organization disagrees with the finding, it may within the 30 day review period specify the reasons for disagreeing with the finding and request the Council to review and object to the finding pursuant to paragraph (c)(2)(ii) of this section.

(3) *Council review of findings.* (i) When a finding is submitted to the Council pursuant to paragraph (c)(2)(i) of this section, the Council shall review the finding and provide the agency official and, if the Council determines the issue warrants it, the head of the agency with its opinion as to whether the adverse effect criteria have been correctly applied. A Council decision to provide its opinion to the head of an agency shall be guided by the criteria in appendix A to this part. The Council will provide its opinion within 15 days of receiving the documented finding from the agency official. The Council at its discretion may extend that time period for 15 days, in which case it shall notify the agency of such extension prior to the end of the initial 15 day period. If the Council does not respond within the applicable time period, the agency official's responsibilities under section 106 are fulfilled.

(ii)(A) The person to whom the Council addresses its opinion (the agency official or the head of the agency) shall take into account the Council's opinion in reaching a final decision on the finding.

(B) The person to whom the Council addresses its opinion (the agency official or the head of the agency) shall prepare a summary of the decision that contains the rationale for the decision and evidence of consideration of the Council's opinion, and provide it to the Council, the SHPO/THPO, and the consulting parties. The head of the agency may delegate his or her duties under this paragraph to the agency's senior policy official. If the agency official's initial finding will be revised, the agency official shall proceed in accordance with the revised finding. If the final decision of the agency is to affirm the initial finding of no adverse effect, once the summary of the decision has been sent to the Council, the SHPO/THPO, and the consulting parties, the agency official's responsibilities under section 106 are fulfilled.

(C) The Council shall retain a record of agency responses to Council opinions on their findings of no adverse effects. The Council shall make this information available to the public.

(d) *Results of assessment*—(1) *No adverse effect.* The agency official shall maintain a record of the finding and provide information on the finding to the public on request, consistent with the confidentiality provisions of § 800.11(c). Implementation of the undertaking in accordance with the finding as documented fulfills the agency official's responsibilities under section 106 and this part. If the agency official will not conduct the undertaking as proposed in the finding, the agency official shall reopen consultation under paragraph (a) of this section.

(2) *Adverse effect.* If an adverse effect is found, the agency official shall consult further to resolve the adverse effect pursuant to § 800.6.

[65 FR 77725, Dec. 12, 2000, as amended at 69 FR 40553, July 6, 2004]

§ 800.6 Resolution of adverse effects.

(a) *Continue consultation.* The agency official shall consult with the SHPO/THPO and other consulting parties, including Indian tribes and Native Hawaiian organizations, to develop and evaluate alternatives or modifications to the undertaking that could avoid, minimize, or mitigate adverse effects on historic properties.

(1) *Notify the Council and determine Council participation.* The agency official shall notify the Council of the adverse effect finding by providing the documentation specified in § 800.11(e).

(i) The notice shall invite the Council to participate in the consultation when:

(A) The agency official wants the Council to participate;

(B) The undertaking has an adverse effect upon a National Historic Landmark; or

(C) A programmatic agreement under § 800.14(b) will be prepared;

(ii) The SHPO/THPO, an Indian tribe or Native Hawaiian organization, or any other consulting party may at any time independently request the Council to participate in the consultation.

(iii) The Council shall advise the agency official and all consulting parties whether it will participate within 15 days of receipt of notice or other request. Prior to entering the process, the Council shall provide written notice to the agency official and the consulting parties that its decision to participate meets the criteria set forth in appendix A to this part. The Council shall also advise the head of the agency of its decision to enter the process. Consultation with Council participation is conducted in accordance with paragraph (b)(2) of this section.

(iv) If the Council does not join the consultation, the agency official shall proceed with consultation in accordance with paragraph (b)(1) of this section.

(2) *Involve consulting parties.* In addition to the consulting parties identified under § 800.3(f), the agency official, the SHPO/THPO and the Council, if participating, may agree to invite other individuals or organizations to become consulting parties. The agency official shall invite any individual or organization that will assume a specific role or responsibility in a memorandum of agreement to participate as a consulting party.

(3) *Provide documentation.* The agency official shall provide to all consulting parties the documentation specified in § 800.11(e), subject to the confidentiality provisions of § 800.11(c), and such other documentation as may be developed during the consultation to resolve adverse effects.

(4) *Involve the public.* The agency official shall make information available to the public, including the documentation specified in § 800.11(e), subject to the confidentiality provisions of § 800.11(c). The agency official shall provide an opportunity for members of the public to express their views on resolving adverse effects of the undertaking. The agency official should use appropriate mechanisms, taking into account the magnitude of the undertaking and the nature of its effects upon historic properties, the likely effects on historic properties, and the relationship of the Federal involvement to the undertaking to ensure that the public's views are considered in the consultation. The agency official should also consider the extent of notice and information concerning historic preservation issues afforded the public at earlier steps in the section 106 process to determine the appropriate level of public involvement when resolving adverse effects so that the standards of § 800.2(d) are met.

(5) *Restrictions on disclosure of information.* Section 304 of the act and other authorities may limit the disclosure of information under paragraphs (a)(3) and (a)(4) of this section. If an Indian tribe or Native Hawaiian organization objects to the disclosure of information or if the agency official believes that there are other reasons to withhold information, the agency official shall comply with § 800.11(c) regarding the disclosure of such information.

(b) *Resolve adverse effects*—(1) *Resolution without the Council.* (i) The agency official shall consult with the SHPO/THPO and other consulting parties to seek ways to avoid, minimize or mitigate the adverse effects.

(ii) The agency official may use standard treatments established by the Council under § 800.14(d) as a basis for a memorandum of agreement.

(iii) If the Council decides to join the consultation, the agency official shall follow paragraph (b)(2) of this section.

(iv) If the agency official and the SHPO/THPO agree on how the adverse effects will be resolved, they shall execute a memorandum of agreement. The agency official must submit a copy of

the executed memorandum of agreement, along with the documentation specified in § 800.11(f), to the Council prior to approving the undertaking in order to meet the requirements of section 106 and this subpart.

(v) If the agency official, and the SHPO/THPO fail to agree on the terms of a memorandum of agreement, the agency official shall request the Council to join the consultation and provide the Council with the documentation set forth in § 800.11(g). If the Council decides to join the consultation, the agency official shall proceed in accordance with paragraph (b)(2) of this section. If the Council decides not to join the consultation, the Council will notify the agency and proceed to comment in accordance with § 800.7(c).

(2) *Resolution with Council participation*. If the Council decides to participate in the consultation, the agency official shall consult with the SHPO/THPO, the Council, and other consulting parties, including Indian tribes and Native Hawaiian organizations under § 800.2(c)(3), to seek ways to avoid, minimize or mitigate the adverse effects. If the agency official, the SHPO/THPO, and the Council agree on how the adverse effects will be resolved, they shall execute a memorandum of agreement.

(c) *Memorandum of agreement*. A memorandum of agreement executed and implemented pursuant to this section evidences the agency official's compliance with section 106 and this part and shall govern the undertaking and all of its parts. The agency official shall ensure that the undertaking is carried out in accordance with the memorandum of agreement.

(1) *Signatories*. The signatories have sole authority to execute, amend or terminate the agreement in accordance with this subpart.

(i) The agency official and the SHPO/THPO are the signatories to a memorandum of agreement executed pursuant to paragraph (b)(1) of this section.

(ii) The agency official, the SHPO/THPO, and the Council are the signatories to a memorandum of agreement executed pursuant to paragraph (b)(2) of this section.

(iii) The agency official and the Council are signatories to a memorandum of agreement executed pursuant to § 800.7(a)(2).

(2) *Invited signatories*. (i) The agency official may invite additional parties to be signatories to a memorandum of agreement. Any such party that signs the memorandum of agreement shall have the same rights with regard to seeking amendment or termination of the memorandum of agreement as other signatories.

(ii) The agency official may invite an Indian tribe or Native Hawaiian organization that attaches religious and cultural significance to historic properties located off tribal lands to be a signatory to a memorandum of agreement concerning such properties.

(iii) The agency official should invite any party that assumes a responsibility under a memorandum of agreement to be a signatory.

(iv) The refusal of any party invited to become a signatory to a memorandum of agreement pursuant to paragraph (c)(2) of this section does not invalidate the memorandum of agreement.

(3) *Concurrence by others*. The agency official may invite all consulting parties to concur in the memorandum of agreement. The signatories may agree to invite others to concur. The refusal of any party invited to concur in the memorandum of agreement does not invalidate the memorandum of agreement.

(4) *Reports on implementation*. Where the signatories agree it is appropriate, a memorandum of agreement shall include a provision for monitoring and reporting on its implementation.

(5) *Duration*. A memorandum of agreement shall include provisions for termination and for reconsideration of terms if the undertaking has not been implemented within a specified time.

(6) *Discoveries*. Where the signatories agree it is appropriate, a memorandum of agreement shall include provisions to deal with the subsequent discovery or identification of additional historic properties affected by the undertaking.

(7) *Amendments*. The signatories to a memorandum of agreement may amend it. If the Council was not a signatory

to the original agreement and the signatories execute an amended agreement, the agency official shall file it with the Council.

(8) *Termination*. If any signatory determines that the terms of a memorandum of agreement cannot be or are not being carried out, the signatories shall consult to seek amendment of the agreement. If the agreement is not amended, any signatory may terminate it. The agency official shall either execute a memorandum of agreement with signatories under paragraph (c)(1) of this section or request the comments of the Council under § 800.7(a).

(9) *Copies*. The agency official shall provide each consulting party with a copy of any memorandum of agreement executed pursuant to this subpart.

§ 800.7 Failure to resolve adverse effects.

(a) *Termination of consultation*. After consulting to resolve adverse effects pursuant to § 800.6(b)(2), the agency official, the SHPO/THPO, or the Council may determine that further consultation will not be productive and terminate consultation. Any party that terminates consultation shall notify the other consulting parties and provide them the reasons for terminating in writing.

(1) If the agency official terminates consultation, the head of the agency or an Assistant Secretary or other officer with major department-wide or agency-wide responsibilities shall request that the Council comment pursuant to paragraph (c) of this section and shall notify all consulting parties of the request.

(2) If the SHPO terminates consultation, the agency official and the Council may execute a memorandum of agreement without the SHPO's involvement.

(3) If a THPO terminates consultation regarding an undertaking occurring on or affecting historic properties on its tribal lands, the Council shall comment pursuant to paragraph (c) of this section.

(4) If the Council terminates consultation, the Council shall notify the agency official, the agency's Federal preservation officer and all consulting parties of the termination and comment under paragraph (c) of this section. The Council may consult with the agency's Federal preservation officer prior to terminating consultation to seek to resolve issues concerning the undertaking and its effects on historic properties.

(b) *Comments without termination*. The Council may determine that it is appropriate to provide additional advisory comments upon an undertaking for which a memorandum of agreement will be executed. The Council shall provide them to the agency official when it executes the memorandum of agreement.

(c) *Comments by the Council*—(1) *Preparation*. The Council shall provide an opportunity for the agency official, all consulting parties, and the public to provide their views within the time frame for developing its comments. Upon request of the Council, the agency official shall provide additional existing information concerning the undertaking and assist the Council in arranging an onsite inspection and an opportunity for public participation.

(2) *Timing*. The Council shall transmit its comments within 45 days of receipt of a request under paragraph (a)(1) or (a)(3) of this section or § 800.8(c)(3), or termination by the Council under § 800.6(b)(1)(v) or paragraph (a)(4) of this section, unless otherwise agreed to by the agency official.

(3) *Transmittal*. The Council shall provide its comments to the head of the agency requesting comment with copies to the agency official, the agency's Federal preservation officer, all consulting parties, and others as appropriate.

(4) *Response to Council comment*. The head of the agency shall take into account the Council's comments in reaching a final decision on the undertaking. Section 110(l) of the act directs that the head of the agency shall document this decision and may not delegate his or her responsibilities pursuant to section 106. Documenting the agency head's decision shall include:

(i) Preparing a summary of the decision that contains the rationale for the decision and evidence of consideration of the Council's comments and providing it to the Council prior to approval of the undertaking;

(ii) Providing a copy of the summary to all consulting parties; and

(iii) Notifying the public and making the record available for public inspection.

§ 800.8 Coordination With the National Environmental Policy Act.

(a) *General principles*—(1) *Early coordination*. Federal agencies are encouraged to coordinate compliance with section 106 and the procedures in this part with any steps taken to meet the requirements of the National Environmental Policy Act (NEPA). Agencies should consider their section 106 responsibilities as early as possible in the NEPA process, and plan their public participation, analysis, and review in such a way that they can meet the purposes and requirements of both statutes in a timely and efficient manner. The determination of whether an undertaking is a ''major Federal action significantly affecting the quality of the human environment,'' and therefore requires preparation of an environmental impact statement (EIS) under NEPA, should include consideration of the undertaking's likely effects on historic properties. A finding of adverse effect on a historic property does not necessarily require an EIS under NEPA.

(2) *Consulting party roles*. SHPO/THPOs, Indian tribes, and Native Hawaiian organizations, other consulting parties, and organizations and individuals who may be concerned with the possible effects of an agency action on historic properties should be prepared to consult with agencies early in the NEPA process, when the purpose of and need for the proposed action as well as the widest possible range of alternatives are under consideration.

(3) *Inclusion of historic preservation issues*. Agency officials should ensure that preparation of an environmental assessment (EA) and finding of no significant impact (FONSI) or an EIS and record of decision (ROD) includes appropriate scoping, identification of historic properties, assessment of effects upon them, and consultation leading to resolution of any adverse effects.

(b) *Actions categorically excluded under NEPA*. If a project, activity or program is categorically excluded from NEPA review under an agency's NEPA procedures, the agency official shall determine if it still qualifies as an undertaking requiring review under section 106 pursuant to § 800.3(a). If so, the agency official shall proceed with section 106 review in accordance with the procedures in this subpart.

(c) *Use of the NEPA process for section 106 purposes*. An agency official may use the process and documentation required for the preparation of an EA/FONSI or an EIS/ROD to comply with section 106 in lieu of the procedures set forth in §§ 800.3 through 800.6 if the agency official has notified in advance the SHPO/THPO and the Council that it intends to do so and the following standards are met.

(1) *Standards for developing environmental documents to comply with Section 106*. During preparation of the EA or draft EIS (DEIS) the agency official shall:

(i) Identify consulting parties either pursuant to § 800.3(f) or through the NEPA scoping process with results consistent with § 800.3(f);

(ii) Identify historic properties and assess the effects of the undertaking on such properties in a manner consistent with the standards and criteria of §§ 800.4 through 800.5, provided that the scope and timing of these steps may be phased to reflect the agency official's consideration of project alternatives in the NEPA process and the effort is commensurate with the assessment of other environmental factors;

(iii) Consult regarding the effects of the undertaking on historic properties with the SHPO/THPO, Indian tribes, and Native Hawaiian organizations that might attach religious and cultural significance to affected historic properties, other consulting parties, and the Council, where appropriate, during NEPA scoping, environmental analysis, and the preparation of NEPA documents;

(iv) Involve the public in accordance with the agency's published NEPA procedures; and (v) Develop in consultation with identified consulting parties alternatives and proposed measures that might avoid, minimize or mitigate any adverse effects of the undertaking on historic properties and describe them in the EA or DEIS.

(2) *Review of environmental documents.* (i) The agency official shall submit the EA, DEIS, or EIS to the SHPO/THPO, Indian tribes, and Native Hawaiian organizations that might attach religious and cultural significance to affected historic properties, and other consulting parties prior to or when making the document available for public comment. If the document being prepared is a DEIS or EIS, the agency official shall also submit it to the Council.

(ii) Prior to or within the time allowed for public comment on the document, a SHPO/THPO, an Indian tribe or Native Hawaiian organization, another consulting party or the Council may object to the agency official that preparation of the EA, DEIS, or EIS has not met the standards set forth in paragraph (c)(1) of this section or that the substantive resolution of the effects on historic properties proposed in an EA, DEIS, or EIS is inadequate. If the agency official receives such an objection, the agency official shall refer the matter to the Council.

(3) *Resolution of objections.* Within 30 days of the agency official's referral of an objection under paragraph (c)(2)(ii) of this section, the Council shall review the objection and notify the agency as to its opinion on the objection.

(i) If the Council agrees with the objection:

(A) The Council shall provide the agency official and, if the Council determines the issue warrants it, the head of the agency with the Council's opinion regarding the objection. A Council decision to provide its opinion to the head of an agency shall be guided by the criteria in appendix A to this part. The person to whom the Council addresses its opinion (the agency official or the head of the agency) shall take into account the Council's opinion in reaching a final decision on the issue of the objection.

(B) The person to whom the Council addresses its opinion (the agency official or the head of the agency) shall prepare a summary of the decision that contains the rationale for the decision and evidence of consideration of the Council's opinion, and provide it to the Council. The head of the agency may delegate his or her duties under this paragraph to the agency's senior Policy Official. If the agency official's initial decision regarding the matter that is the subject of the objection will be revised, the agency official shall proceed in accordance with the revised decision. If the final decision of the agency is to affirm the initial agency decision, once the summary of the final decision has been sent to the Council, the agency official shall continue its compliance with this section.

(ii) If the Council disagrees with the objection, the Council shall so notify the agency official, in which case the agency official shall continue its compliance with this section.

(iii) If the Council fails to respond to the objection within the 30 day period, the agency official shall continue its compliance with this section.

(4) *Approval of the undertaking.* If the agency official has found, during the preparation of an EA or EIS that the effects of an undertaking on historic properties are adverse, the agency official shall develop measures in the EA, DEIS, or EIS to avoid, minimize, or mitigate such effects in accordance with paragraph (c)(1)(v) of this section. The agency official's responsibilities under section 106 and the procedures in this subpart shall then be satisfied when either:

(i) A binding commitment to such proposed measures is incorporated in:

(A) The ROD, if such measures were proposed in a DEIS or EIS; or

(B) An MOA drafted in compliance with § 800.6(c); or

(ii) The Council has commented under § 800.7 and received the agency's response to such comments.

(5) *Modification of the undertaking.* If the undertaking is modified after approval of the FONSI or the ROD in a manner that changes the undertaking or alters its effects on historic properties, or if the agency official fails to ensure that the measures to avoid, minimize or mitigate adverse effects (as specified in either the FONSI or the ROD, or in the binding commitment adopted pursuant to paragraph (c)(4) of this section) are carried out, the agency official shall notify the Council and all consulting parties that supplemental environmental documents will be prepared in compliance with NEPA or that the procedures in §§ 800.3

through 800.6 will be followed as necessary.

[65 FR 77725, Dec. 12, 2000, as amended at 69 FR 40554, July 6, 2004]

§ 800.9 Council review of section 106 compliance.

(a) *Assessment of agency official compliance for individual undertakings.* The Council may provide to the agency official its advisory opinion regarding the substance of any finding, determination or decision or regarding the adequacy of the agency official's compliance with the procedures under this part. The Council may provide such advice at any time at the request of any individual, agency or organization or on its own initiative. The agency official shall consider the views of the Council in reaching a decision on the matter in question.

(b) *Agency foreclosure of the Council's opportunity to comment.* Where an agency official has failed to complete the requirements of section 106 in accordance with the procedures in this part prior to the approval of an undertaking, the Council's opportunity to comment may be foreclosed. The Council may review a case to determine whether a foreclosure has occurred. The Council shall notify the agency official and the agency's Federal preservation officer and allow 30 days for the agency official to provide information as to whether foreclosure has occurred. If the Council determines foreclosure has occurred, the Council shall transmit the determination to the agency official and the head of the agency. The Council shall also make the determination available to the public and any parties known to be interested in the undertaking and its effects upon historic properties.

(c) *Intentional adverse effects by applicants*—(1) *Agency responsibility.* Section 110(k) of the act prohibits a Federal agency from granting a loan, loan guarantee, permit, license or other assistance to an applicant who, with intent to avoid the requirements of section 106, has intentionally significantly adversely affected a historic property to which the grant would relate, or having legal power to prevent it, has allowed such significant adverse effect to occur, unless the agency, after consultation with the Council, determines that circumstances justify granting such assistance despite the adverse effect created or permitted by the applicant. Guidance issued by the Secretary pursuant to section 110 of the act governs its implementation.

(2) *Consultation with the Council.* When an agency official determines, based on the actions of an applicant, that section 110(k) is applicable and that circumstances may justify granting the assistance, the agency official shall notify the Council and provide documentation specifying the circumstances under which the adverse effects to the historic property occurred and the degree of damage to the integrity of the property. This documentation shall include any views obtained from the applicant, SHPO/THPO, an Indian tribe if the undertaking occurs on or affects historic properties on tribal lands, and other parties known to be interested in the undertaking.

(i) Within thirty days of receiving the agency official's notification, unless otherwise agreed to by the agency official, the Council shall provide the agency official with its opinion as to whether circumstances justify granting assistance to the applicant and any possible mitigation of the adverse effects.

(ii) The agency official shall consider the Council's opinion in making a decision on whether to grant assistance to the applicant, and shall notify the Council, the SHPO/THPO, and other parties known to be interested in the undertaking prior to granting the assistance.

(3) *Compliance with Section 106.* If an agency official, after consulting with the Council, determines to grant the assistance, the agency official shall comply with §§ 800.3 through 800.6 to take into account the effects of the undertaking on any historic properties.

(d) *Evaluation of Section 106 operations.* The Council may evaluate the operation of the section 106 process by periodic reviews of how participants have fulfilled their legal responsibilities and how effectively the outcomes reached advance the purposes of the act.

(1) *Information from participants.* Section 203 of the act authorizes the Council to obtain information from Federal agencies necessary to conduct evaluation of the section 106 process. The agency official shall make documentation of agency policies, operating procedures and actions taken to comply with section 106 available to the Council upon request. The Council may request available information and documentation from other participants in the section 106 process.

(2) *Improving the operation of section 106.* Based upon any evaluation of the section 106 process, the Council may make recommendations to participants, the heads of Federal agencies, and the Secretary of actions to improve the efficiency and effectiveness of the process. Where the Council determines that an agency official or a SHPO/THPO has failed to properly carry out the responsibilities assigned under the process in this part, the Council may participate in individual case reviews conducted under such process in addition to the SHPO/THPO for such period that it determines is necessary to improve performance or correct deficiencies. If the Council finds a pattern of failure by a Federal agency in carrying out its responsibilities under section 106, the Council may review the policies and programs of the agency related to historic preservation pursuant to section 202(a)(6) of the act and recommend methods to improve the effectiveness, coordination, and consistency of those policies and programs with section 106.

§ 800.10 Special requirements for protecting National Historic Landmarks.

(a) *Statutory requirement.* Section 110(f) of the act requires that the agency official, to the maximum extent possible, undertake such planning and actions as may be necessary to minimize harm to any National Historic Landmark that may be directly and adversely affected by an undertaking. When commenting on such undertakings, the Council shall use the process set forth in §§ 800.6 through 800.7 and give special consideration to protecting National Historic Landmarks as specified in this section.

(b) *Resolution of adverse effects.* The agency official shall request the Council to participate in any consultation to resolve adverse effects on National Historic Landmarks conducted under § 800.6.

(c) *Involvement of the Secretary.* The agency official shall notify the Secretary of any consultation involving a National Historic Landmark and invite the Secretary to participate in the consultation where there may be an adverse effect. The Council may request a report from the Secretary under section 213 of the act to assist in the consultation.

(d) *Report of outcome.* When the Council participates in consultation under this section, it shall report the outcome of the section 106 process, providing its written comments or any memoranda of agreement to which it is a signatory, to the Secretary and the head of the agency responsible for the undertaking.

§ 800.11 Documentation standards.

(a) *Adequacy of documentation.* The agency official shall ensure that a determination, finding, or agreement under the procedures in this subpart is supported by sufficient documentation to enable any reviewing parties to understand its basis. The agency official shall provide such documentation to the extent permitted by law and within available funds. When an agency official is conducting phased identification or evaluation under this subpart, the documentation standards regarding description of historic properties may be applied flexibly. If the Council, or the SHPO/THPO when the Council is not involved, determines the applicable documentation standards are not met, the Council or the SHPO/THPO, as appropriate, shall notify the agency official and specify the information needed to meet the standard. At the request of the agency official or any of the consulting parties, the Council shall review any disputes over whether documentation standards are met and provide its views to the agency official and the consulting parties.

(b) *Format.* The agency official may use documentation prepared to comply

with other laws to fulfill the requirements of the procedures in this subpart, if that documentation meets the standards of this section.

(c) *Confidentiality*—(1) *Authority to withhold information*. Section 304 of the act provides that the head of a Federal agency or other public official receiving grant assistance pursuant to the act, after consultation with the Secretary, shall withhold from public disclosure information about the location, character, or ownership of a historic property when disclosure may cause a significant invasion of privacy; risk harm to the historic property; or impede the use of a traditional religious site by practitioners. When the head of a Federal agency or other public official has determined that information should be withheld from the public pursuant to these criteria, the Secretary, in consultation with such Federal agency head or official, shall determine who may have access to the information for the purposes of carrying out the act.

(2) *Consultation with the Council*. When the information in question has been developed in the course of an agency's compliance with this part, the Secretary shall consult with the Council in reaching determinations on the withholding and release of information. The Federal agency shall provide the Council with available information, including views of the SHPO/THPO, Indian tribes and Native Hawaiian organizations, related to the confidentiality concern. The Council shall advise the Secretary and the Federal agency within 30 days of receipt of adequate documentation.

(3) *Other authorities affecting confidentiality*. Other Federal laws and program requirements may limit public access to information concerning an undertaking and its effects on historic properties. Where applicable, those authorities shall govern public access to information developed in the section 106 process and may authorize the agency official to protect the privacy of nongovernmental applicants.

(d) *Finding of no historic properties affected*. Documentation shall include:

(1) A description of the undertaking, specifying the Federal involvement, and its area of potential effects, including photographs, maps, drawings, as necessary;

(2) A description of the steps taken to identify historic properties, including, as appropriate, efforts to seek information pursuant to § 800.4(b); and

(3) The basis for determining that no historic properties are present or affected.

(e) *Finding of no adverse effect or adverse effect*. Documentation shall include:

(1) A description of the undertaking, specifying the Federal involvement, and its area of potential effects, including photographs, maps, and drawings, as necessary;

(2) A description of the steps taken to identify historic properties;

(3) A description of the affected historic properties, including information on the characteristics that qualify them for the National Register;

(4) A description of the undertaking's effects on historic properties;

(5) An explanation of why the criteria of adverse effect were found applicable or inapplicable, including any conditions or future actions to avoid, minimize or mitigate adverse effects; and

(6) Copies or summaries of any views provided by consulting parties and the public.

(f) *Memorandum of agreement*. When a memorandum of agreement is filed with the Council, the documentation shall include, any substantive revisions or additions to the documentation provided the Council pursuant to § 800.6(a)(1), an evaluation of any measures considered to avoid or minimize the undertaking's adverse effects and a summary of the views of consulting parties and the public.

(g) *Requests for comment without a memorandum of agreement. Documentation shall include:*

(1) A description and evaluation of any alternatives or mitigation measures that the agency official proposes to resolve the undertaking's adverse effects;

(2) A description of any reasonable alternatives or mitigation measures that were considered but not chosen, and the reasons for their rejection;

(3) Copies or summaries of any views submitted to the agency official concerning the adverse effects of the undertaking on historic properties and alternatives to reduce or avoid those effects; and

(4) Any substantive revisions or additions to the documentation provided the Council pursuant to § 800.6(a)(1).

§ 800.12 Emergency situations.

(a) *Agency procedures*. The agency official, in consultation with the appropriate SHPOs/THPOs, affected Indian tribes and Native Hawaiian organizations, and the Council, is encouraged to develop procedures for taking historic properties into account during operations which respond to a disaster or emergency declared by the President, a tribal government, or the Governor of a State or which respond to other immediate threats to life or property. If approved by the Council, the procedures shall govern the agency's historic preservation responsibilities during any disaster or emergency in lieu of §§ 800.3 through 800.6.

(b) *Alternatives to agency procedures*. In the event an agency official proposes an emergency undertaking as an essential and immediate response to a disaster or emergency declared by the President, a tribal government, or the Governor of a State or another immediate threat to life or property, and the agency has not developed procedures pursuant to paragraph (a) of this section, the agency official may comply with section 106 by:

(1) Following a programmatic agreement developed pursuant to § 800.14(b) that contains specific provisions for dealing with historic properties in emergency situations; or

(2) Notifying the Council, the appropriate SHPO/THPO and any Indian tribe or Native Hawaiian organization that may attach religious and cultural significance to historic properties likely to be affected prior to the undertaking and affording them an opportunity to comment within seven days of notification. If the agency official determines that circumstances do not permit seven days for comment, the agency official shall notify the Council, the SHPO/THPO and the Indian tribe or Native Hawaiian organization and invite any comments within the time available.

(c) *Local governments responsible for section 106 compliance*. When a local government official serves as the agency official for section 106 compliance, paragraphs (a) and (b) of this section also apply to an imminent threat to public health or safety as a result of a natural disaster or emergency declared by a local government's chief executive officer or legislative body, provided that if the Council or SHPO/THPO objects to the proposed action within seven days, the agency official shall comply with §§ 800.3 through 800.6.

(d) *Applicability*. This section applies only to undertakings that will be implemented within 30 days after the disaster or emergency has been formally declared by the appropriate authority. An agency may request an extension of the period of applicability from the Council prior to the expiration of the 30 days. Immediate rescue and salvage operations conducted to preserve life or property are exempt from the provisions of section 106 and this part.

§ 800.13 Post-review discoveries.

(a) *Planning for subsequent discoveries*—(1) *Using a programmatic agreement*. An agency official may develop a programmatic agreement pursuant to § 800.14(b) to govern the actions to be taken when historic properties are discovered during the implementation of an undertaking.

(2) *Using agreement documents*. When the agency official's identification efforts in accordance with § 800.4 indicate that historic properties are likely to be discovered during implementation of an undertaking and no programmatic agreement has been developed pursuant to paragraph (a)(1) of this section, the agency official shall include in any finding of no adverse effect or memorandum of agreement a process to resolve any adverse effects upon such properties. Actions in conformance with the process satisfy the agency official's responsibilities under section 106 and this part.

(b) *Discoveries without prior planning*. If historic properties are discovered or unanticipated effects on historic properties found after the agency official has completed the section 106 process

without establishing a process under paragraph (a) of this section, the agency official shall make reasonable efforts to avoid, minimize or mitigate adverse effects to such properties and:

(1) If the agency official has not approved the undertaking or if construction on an approved undertaking has not commenced, consult to resolve adverse effects pursuant to § 800.6; or

(2) If the agency official, the SHPO/THPO and any Indian tribe or Native Hawaiian organization that might attach religious and cultural significance to the affected property agree that such property is of value solely for its scientific, prehistoric, historic or archeological data, the agency official may comply with the Archeological and Historic Preservation Act instead of the procedures in this part and provide the Council, the SHPO/THPO, and the Indian tribe or Native Hawaiian organization with a report on the actions within a reasonable time after they are completed; or

(3) If the agency official has approved the undertaking and construction has commenced, determine actions that the agency official can take to resolve adverse effects, and notify the SHPO/THPO, any Indian tribe or Native Hawaiian organization that might attach religious and cultural significance to the affected property, and the Council within 48 hours of the discovery. The notification shall describe the agency official's assessment of National Register eligibility of the property and proposed actions to resolve the adverse effects. The SHPO/THPO, the Indian tribe or Native Hawaiian organization and the Council shall respond within 48 hours of the notification. The agency official shall take into account their recommendations regarding National Register eligibility and proposed actions, and then carry out appropriate actions. The agency official shall provide the SHPO/THPO, the Indian tribe or Native Hawaiian organization and the Council a report of the actions when they are completed.

(c) *Eligibility of properties.* The agency official, in consultation with the SHPO/THPO, may assume a newly-discovered property to be eligible for the National Register for purposes of section 106. The agency official shall specify the National Register criteria used to assume the property's eligibility so that information can be used in the resolution of adverse effects.

(d) *Discoveries on tribal lands.* If historic properties are discovered on tribal lands, or there are unanticipated effects on historic properties found on tribal lands, after the agency official has completed the section 106 process without establishing a process under paragraph (a) of this section and construction has commenced, the agency official shall comply with applicable tribal regulations and procedures and obtain the concurrence of the Indian tribe on the proposed action.

Subpart C—Program Alternatives

§ 800.14 Federal agency program alternatives.

(a) *Alternate procedures.* An agency official may develop procedures to implement section 106 and substitute them for all or part of subpart B of this part if they are consistent with the Council's regulations pursuant to section 110(a)(2)(E) of the act.

(1) *Development of procedures.* The agency official shall consult with the Council, the National Conference of State Historic Preservation Officers, or individual SHPO/THPOs, as appropriate, and Indian tribes and Native Hawaiian organizations, as specified in paragraph (f) of this section, in the development of alternate procedures, publish notice of the availability of proposed alternate procedures in the FEDERAL REGISTER and take other appropriate steps to seek public input during the development of alternate procedures.

(2) *Council review.* The agency official shall submit the proposed alternate procedures to the Council for a 60-day review period. If the Council finds the procedures to be consistent with this part, it shall notify the agency official and the agency official may adopt them as final alternate procedures.

(3) *Notice.* The agency official shall notify the parties with which it has consulted and publish notice of final alternate procedures in the FEDERAL REGISTER.

(4) *Legal effect.* Alternate procedures adopted pursuant to this subpart substitute for the Council's regulations for the purposes of the agency's compliance with section 106, except that where an Indian tribe has entered into an agreement with the Council to substitute tribal historic preservation regulations for the Council's regulations under section 101(d)(5) of the act, the agency shall follow those regulations in lieu of the agency's procedures regarding undertakings on tribal lands. Prior to the Council entering into such agreements, the Council will provide Federal agencies notice and opportunity to comment on the proposed substitute tribal regulations.

(b) *Programmatic agreements.* The Council and the agency official may negotiate a programmatic agreement to govern the implementation of a particular program or the resolution of adverse effects from certain complex project situations or multiple undertakings.

(1) *Use of programmatic agreements.* A programmatic agreement may be used:

(i) When effects on historic properties are similar and repetitive or are multi-State or regional in scope;

(ii) When effects on historic properties cannot be fully determined prior to approval of an undertaking;

(iii) When nonfederal parties are delegated major decisionmaking responsibilities;

(iv) Where routine management activities are undertaken at Federal installations, facilities, or other land-management units; or

(v) Where other circumstances warrant a departure from the normal section 106 process.

(2) *Developing programmatic agreements for agency programs.* (i) The consultation shall involve, as appropriate, SHPO/THPOs, the National Conference of State Historic Preservation Officers (NCSHPO), Indian tribes and Native Hawaiian organizations, other Federal agencies, and members of the public. If the programmatic agreement has the potential to affect historic properties on tribal lands or historic properties of religious and cultural significance to an Indian tribe or Native Hawaiian organization, the agency official shall also follow paragraph (f) of this section.

(ii) *Public participation.* The agency official shall arrange for public participation appropriate to the subject matter and the scope of the program and in accordance with subpart A of this part. The agency official shall consider the nature of the program and its likely effects on historic properties and take steps to involve the individuals, organizations and entities likely to be interested.

(iii) *Effect.* The programmatic agreement shall take effect when executed by the Council, the agency official and the appropriate SHPOs/THPOs when the programmatic agreement concerns a specific region or the president of NCSHPO when NCSHPO has participated in the consultation. A programmatic agreement shall take effect on tribal lands only when the THPO, Indian tribe, or a designated representative of the tribe is a signatory to the agreement. Compliance with the procedures established by an approved programmatic agreement satisfies the agency's section 106 responsibilities for all individual undertakings of the program covered by the agreement until it expires or is terminated by the agency, the president of NCSHPO when a signatory, or the Council. Termination by an individual SHPO/THPO shall only terminate the application of a regional programmatic agreement within the jurisdiction of the SHPO/THPO. If a THPO assumes the responsibilities of a SHPO pursuant to section 101(d)(2) of the act and the SHPO is signatory to programmatic agreement, the THPO assumes the role of a signatory, including the right to terminate a regional programmatic agreement on lands under the jurisdiction of the tribe.

(iv) *Notice.* The agency official shall notify the parties with which it has consulted that a programmatic agreement has been executed under paragraph (b) of this section, provide appropriate public notice before it takes effect, and make any internal agency procedures implementing the agreement readily available to the Council, SHPO/THPOs, and the public.

(v) If the Council determines that the terms of a programmatic agreement are not being carried out, or if such an

agreement is terminated, the agency official shall comply with subpart B of this part with regard to individual undertakings of the program covered by the agreement.

(3) *Developing programmatic agreements for complex or multiple undertakings.* Consultation to develop a programmatic agreement for dealing with the potential adverse effects of complex projects or multiple undertakings shall follow § 800.6. If consultation pertains to an activity involving multiple undertakings and the parties fail to reach agreement, then the agency official shall comply with the provisions of subpart B of this part for each individual undertaking.

(4) *Prototype programmatic agreements.* The Council may designate an agreement document as a prototype programmatic agreement that may be used for the same type of program or undertaking in more than one case or area. When an agency official uses such a prototype programmatic agreement, the agency official may develop and execute the agreement with the appropriate SHPO/THPO and the agreement shall become final without need for Council participation in consultation or Council signature.

(c) *Exempted categories*—(1) *Criteria for establishing.* The Council or an agency official may propose a program or category of undertakings that may be exempted from review under the provisions of subpart B of this part, if the program or category meets the following criteria:

(i) The actions within the program or category would otherwise qualify as ''undertakings'' as defined in § 800.16;

(ii) The potential effects of the undertakings within the program or category upon historic properties are foreseeable and likely to be minimal or not adverse; and

(iii) Exemption of the program or category is consistent with the purposes of the act.

(2) *Public participation.* The proponent of the exemption shall arrange for public participation appropriate to the subject matter and the scope of the exemption and in accordance with the standards in subpart A of this part. The proponent of the exemption shall consider the nature of the exemption and its likely effects on historic properties and take steps to involve individuals, organizations and entities likely to be interested.

(3) *Consultation with SHPOs/THPOs.* The proponent of the exemption shall notify and consider the views of the SHPOs/THPOs on the exemption.

(4) *Consultation with Indian tribes and Native Hawaiian organizations.* If the exempted program or category of undertakings has the potential to affect historic properties on tribal lands or historic properties of religious and cultural significance to an Indian tribe or Native Hawaiian organization, the Council shall follow the requirements for the agency official set forth in paragraph (f) of this section.

(5) *Council review of proposed exemptions.* The Council shall review an exemption proposal that is supported by documentation describing the program or category for which the exemption is sought, demonstrating that the criteria of paragraph (c)(1) of this section have been met, describing the methods used to seek the views of the public, and summarizing any views submitted by the SHPO/THPOs, the public, and any others consulted. Unless it requests further information, the Council shall approve or reject the proposed exemption within 30 days of receipt, and thereafter notify the relevant agency official and SHPO/THPOs of the decision. The decision shall be based on the consistency of the exemption with the purposes of the act, taking into consideration the magnitude of the exempted undertaking or program and the likelihood of impairment of historic properties in accordance with section 214 of the act.

(6) *Legal consequences.* Any undertaking that falls within an approved exempted program or category shall require no further review pursuant to subpart B of this part, unless the agency official or the Council determines that there are circumstances under which the normally excluded undertaking should be reviewed under subpart B of this part.

(7) *Termination.* The Council may terminate an exemption at the request of the agency official or when the Council determines that the exemption no longer meets the criteria of paragraph

(c)(1) of this section. The Council shall notify the agency official 30 days before termination becomes effective.

(8) *Notice.* The proponent of the exemption shall publish notice of any approved exemption in the FEDERAL REGISTER.

(d) *Standard treatments*—(1) *Establishment.* The Council, on its own initiative or at the request of another party, may establish standard methods for the treatment of a category of historic properties, a category of undertakings, or a category of effects on historic properties to assist Federal agencies in satisfying the requirements of subpart B of this part. The Council shall publish notice of standard treatments in the FEDERAL REGISTER.

(2) *Public participation.* The Council shall arrange for public participation appropriate to the subject matter and the scope of the standard treatment and consistent with subpart A of this part. The Council shall consider the nature of the standard treatment and its likely effects on historic properties and the individuals, organizations and entities likely to be interested. Where an agency official has proposed a standard treatment, the Council may request the agency official to arrange for public involvement.

(3) *Consultation with SHPOs/THPOs.* The Council shall notify and consider the views of SHPOs/THPOs on the proposed standard treatment.

(4) *Consultation with Indian tribes and Native Hawaiian organizations.* If the proposed standard treatment has the potential to affect historic properties on tribal lands or historic properties of religious and cultural significance to an Indian tribe or Native Hawaiian organization, the Council shall follow the requirements for the agency official set forth in paragraph (f) of this section.

(5) *Termination.* The Council may terminate a standard treatment by publication of a notice in the FEDERAL REGISTER 30 days before the termination takes effect.

(e) *Program comments.* An agency official may request the Council to comment on a category of undertakings in lieu of conducting individual reviews under §§ 800.4 through 800.6. The Council may provide program comments at its own initiative.

(1) *Agency request.* The agency official shall identify the category of undertakings, specify the likely effects on historic properties, specify the steps the agency official will take to ensure that the effects are taken into account, identify the time period for which the comment is requested and summarize any views submitted by the public.

(2) *Public participation.* The agency official shall arrange for public participation appropriate to the subject matter and the scope of the category and in accordance with the standards in subpart A of this part. The agency official shall consider the nature of the undertakings and their likely effects on historic properties and the individuals, organizations and entities likely to be interested.

(3) *Consultation with SHPOs/THPOs.* The Council shall notify and consider the views of SHPOs/THPOs on the proposed program comment.

(4) *Consultation with Indian tribes and Native Hawaiian organizations.* If the program comment has the potential to affect historic properties on tribal lands or historic properties of religious and cultural significance to an Indian tribe or Native Hawaiian organization, the Council shall follow the requirements for the agency official set forth in paragraph (f) of this section.

(5) *Council action.* Unless the Council requests additional documentation, notifies the agency official that it will decline to comment, or obtains the consent of the agency official to extend the period for providing comment, the Council shall comment to the agency official within 45 days of the request.

(i) If the Council comments, the agency official shall take into account the comments of the Council in carrying out the undertakings within the category and publish notice in the FEDERAL REGISTER of the Council's comments and steps the agency will take to ensure that effects to historic properties are taken into account.

(ii) If the Council declines to comment, the agency official shall continue to comply with the requirements of §§ 800.3 through 800.6 for the individual undertakings.

(6) *Withdrawal of comment.* If the Council determines that the consideration of historic properties is not being

carried out in a manner consistent with the program comment, the Council may withdraw the comment and the agency official shall comply with the requirements of §§ 800.3 through 800.6 for the individual undertakings.

(f) *Consultation with Indian tribes and Native Hawaiian organizations when developing program alternatives.* Whenever an agency official proposes a program alternative pursuant to paragraphs (a) through (e) of this section, the agency official shall ensure that development of the program alternative includes appropriate government-to-government consultation with affected Indian tribes and consultation with affected Native Hawaiian organizations.

(1) *Identifying affected Indian tribes and Native Hawaiian organizations.* If any undertaking covered by a proposed program alternative has the potential to affect historic properties on tribal lands, the agency official shall identify and consult with the Indian tribes having jurisdiction over such lands. If a proposed program alternative has the potential to affect historic properties of religious and cultural significance to an Indian tribe or a Native Hawaiian organization which are located off tribal lands, the agency official shall identify those Indian tribes and Native Hawaiian organizations that might attach religious and cultural significance to such properties and consult with them. When a proposed program alternative has nationwide applicability, the agency official shall identify an appropriate government to government consultation with Indian tribes and consult with Native Hawaiian organizations in accordance with existing Executive orders, Presidential memoranda, and applicable provisions of law.

(2) *Results of consultation.* The agency official shall provide summaries of the views, along with copies of any written comments, provided by affected Indian tribes and Native Hawaiian organizations to the Council as part of the documentation for the proposed program alternative. The agency official and the Council shall take those views into account in reaching a final decision on the proposed program alternative.

[65 FR 77725, Dec. 12, 2000, as amended at 69 FR 40554, July 6, 2004]

§ 800.15 Tribal, State, and local program alternatives. [Reserved]

§ 800.16 Definitions.

(a) *Act* means the National Historic Preservation Act of 1966, as amended, 16 U.S.C. 470–470w-6.

(b) *Agency* means agency as defined in 5 U.S.C. 551.

(c) *Approval of the expenditure of funds* means any final agency decision authorizing or permitting the expenditure of Federal funds or financial assistance on an undertaking, including any agency decision that may be subject to an administrative appeal.

(d) *Area of potential effects* means the geographic area or areas within which an undertaking may directly or indirectly cause alterations in the character or use of historic properties, if any such properties exist. The area of potential effects is influenced by the scale and nature of an undertaking and may be different for different kinds of effects caused by the undertaking.

(e) *Comment* means the findings and recommendations of the Council formally provided in writing to the head of a Federal agency under section 106.

(f) *Consultation* means the process of seeking, discussing, and considering the views of other participants, and, where feasible, seeking agreement with them regarding matters arising in the section 106 process. The Secretary's ''Standards and Guidelines for Federal Agency Preservation Programs pursuant to the National Historic Preservation Act'' provide further guidance on consultation.

(g) *Council* means the Advisory Council on Historic Preservation or a Council member or employee designated to act for the Council.

(h) *Day* or *days* means calendar days.

(i) *Effect* means alteration to the characteristics of a historic property qualifying it for inclusion in or eligibility for the National Register.

(j) *Foreclosure* means an action taken by an agency official that effectively precludes the Council from providing comments which the agency official can meaningfully consider prior to the approval of the undertaking.

(k) *Head of the agency* means the chief official of the Federal agency responsible for all aspects of the agency's

actions. If a State, local, or tribal government has assumed or has been delegated responsibility for section 106 compliance, the head of that unit of government shall be considered the head of the agency.

(l)(1) *Historic property* means any prehistoric or historic district, site, building, structure, or object included in, or eligible for inclusion in, the National Register of Historic Places maintained by the Secretary of the Interior. This term includes artifacts, records, and remains that are related to and located within such properties. The term includes properties of traditional religious and cultural importance to an Indian tribe or Native Hawaiian organization and that meet the National Register criteria.

(2) The term *eligible for inclusion in the National Register* includes both properties formally determined as such in accordance with regulations of the Secretary of the Interior and all other properties that meet the National Register criteria.

(m) *Indian tribe* means an Indian tribe, band, nation, or other organized group or community, including a native village, regional corporation, or village corporation, as those terms are defined in section 3 of the Alaska Native Claims Settlement Act (43 U.S.C. 1602), which is recognized as eligible for the special programs and services provided by the United States to Indians because of their status as Indians.

(n) *Local government* means a city, county, parish, township, municipality, borough, or other general purpose political subdivision of a State.

(o) *Memorandum of agreement* means the document that records the terms and conditions agreed upon to resolve the adverse effects of an undertaking upon historic properties.

(p) *National Historic Landmark* means a historic property that the Secretary of the Interior has designated a National Historic Landmark.

(q) *National Register* means the National Register of Historic Places maintained by the Secretary of the Interior.

(r) *National Register criteria* means the criteria established by the Secretary of the Interior for use in evaluating the eligibility of properties for the National Register (36 CFR part 60).

(s)(1) *Native Hawaiian organization* means any organization which serves and represents the interests of Native Hawaiians; has as a primary and stated purpose the provision of services to Native Hawaiians; and has demonstrated expertise in aspects of historic preservation that are significant to Native Hawaiians.

(2) *Native Hawaiian* means any individual who is a descendant of the aboriginal people who, prior to 1778, occupied and exercised sovereignty in the area that now constitutes the State of Hawaii.

(t) *Programmatic agreement* means a document that records the terms and conditions agreed upon to resolve the potential adverse effects of a Federal agency program, complex undertaking or other situations in accordance with § 800.14(b).

(u) *Secretary* means the Secretary of the Interior acting through the Director of the National Park Service except where otherwise specified.

(v) *State Historic Preservation Officer (SHPO)* means the official appointed or designated pursuant to section 101(b)(1) of the act to administer the State historic preservation program or a representative designated to act for the State historic preservation officer.

(w) *Tribal Historic Preservation Officer (THPO)* means the tribal official appointed by the tribe's chief governing authority or designated by a tribal ordinance or preservation program who has assumed the responsibilities of the SHPO for purposes of section 106 compliance on tribal lands in accordance with section 101(d)(2) of the act.

(x) *Tribal lands* means all lands within the exterior boundaries of any Indian reservation and all dependent Indian communities.

(y) *Undertaking* means a project, activity, or program funded in whole or in part under the direct or indirect jurisdiction of a Federal agency, including those carried out by or on behalf of a Federal agency; those carried out with Federal financial assistance; and those requiring a Federal permit, license or approval.

(z) *Senior policy official* means the senior policy level official designated

by the head of the agency pursuant to section 3(e) of Executive Order 13287.

[65 FR 77725, Dec. 12, 2000, as amended at 69 FR 40555, July 6, 2004]

APPENDIX A TO PART 800—CRITERIA FOR COUNCIL INVOLVEMENT IN REVIEWING INDIVIDUAL SECTION 106 CASES

(a) *Introduction*. This appendix sets forth the criteria that will be used by the Council to determine whether to enter an individual section 106 review that it normally would not be involved in.

(b) *General policy*. The Council may choose to exercise its authorities under the section 106 regulations to participate in an individual project pursuant to the following criteria. However, the Council will not always elect to participate even though one or more of the criteria may be met.

(c) *Specific criteria*. The Council is likely to enter the section 106 process at the steps specified in the regulations in this part when an undertaking:

(1) *Has substantial impacts on important historic properties*. This may include adverse effects on properties that possess a national level of significance or on properties that are of unusual or noteworthy importance or are a rare property type; or adverse effects to large numbers of historic properties, such as impacts to multiple properties within a historic district.

(2) *Presents important questions of policy or interpretation*. This may include questions about how the Council's regulations are being applied or interpreted, including possible foreclosure or anticipatory demolition situations; situations where the outcome will set a precedent affecting Council policies or program goals; or the development of programmatic agreements that alter the way the section 106 process is applied to a group or type of undertakings.

(3) *Has the potential for presenting procedural problems*. This may include cases with substantial public controversy that is related to historic preservation issues; with disputes among or about consulting parties which the Council's involvement could help resolve; that are involved or likely to be involved in litigation on the basis of section 106; or carried out by a Federal agency, in a State or locality, or on tribal lands where the Council has previously identified problems with section 106 compliance pursuant to § 800.9(d)(2).

(4) *Presents issues of concern to Indian tribes or Native Hawaiian organizations*. This may include cases where there have been concerns raised about the identification of, evaluation of or assessment of effects on historic properties to which an Indian tribe or Native Hawaiian organization attaches religious and cultural significance; where an Indian tribe or Native Hawaiian organization has requested Council involvement to assist in the resolution of adverse effects; or where there are questions relating to policy, interpretation or precedent under section 106 or its relation to other authorities, such as the Native American Graves Protection and Repatriation Act.

PART 801—HISTORIC PRESERVATION REQUIREMENTS OF THE URBAN DEVELOPMENT ACTION GRANT PROGRAM

Sec.
801.1 Purpose and authorities.
801.2 Definitions.
801.3 Applicant responsibilities.
801.4 Council comments.
801.5 State Historic Preservation Officer responsibilities.
801.6 Coordination with requirements under the National Environmental Policy Act (42 U.S.C. 4321 *et seq.*).
801.7 Information requirements.
801.8 Public participation.

APPENDIX 1 TO PART 801—IDENTIFICATION OF PROPERTIES: GENERAL

APPENDIX 2 TO PART 801—SPECIAL PROCEDURES FOR IDENTIFICATION AND CONSIDERATION OF ARCHEOLOGICAL PROPERTIES IN AN URBAN CONTEXT

AUTHORITY: Pub. L. 89–665, 80 Stat. 915 (16 U.S.C. 470); Pub. L. 94–422, 90 Stat. 1320 (16 U.S.C. 470(i)); Pub. L. 96–399, 94 Stat. 1619 (42 U.S.C. 5320).

SOURCE: 46 FR 42428, Aug. 20, 1981, unless otherwise noted.

§ 801.1 Purpose and authorities.

(a) These regulations are required by section 110(c) of the Housing and Community Development Act of 1980 (HCDA) (42 U.S.C. 5320) and apply only to projects proposed to be funded by the Department of Housing and Urban Development (HUD) under the Urban Development Action Grant (UDAG) Program authorized by title I of the Housing and Community Development Act of 1974, as amended (42 U.S.C. 5301). These regulations establish an expedited process for obtaining the comments of the Council specifically for the UDAG program and, except as specifically provided, substitute for the Council's regulations for the ''Protection of Historic and Cultural Properties'' (36 CFR part 800).

(b) Section 110(c) of the HCDA of 1980 requires UDAG applicants to: (1) Identify all properties, if any, which are included in the National Register of Historic Places and which will be affected by the project for which the application is made; (2) identify all other properties, if any, which will be affected by such project and which, as determined by the applicant, may meet the Criteria established by the Secretary of the Interior for inclusion in the National Register (36 CFR 60.6); and (3) provide a description of the effect, as determined by the applicant, of the project on properties identified pursuant to (1) and (2). If the applicant determines that such properties are affected, the Act requires that the information developed by the applicant must be forwarded to the appropriate State Historic Preservation Officer (SHPO) for review and to the Secretary of the Interior for a determination as to whether the affected properties are eligible for inclusion in the National Register.

(c) Section 106 of the National Historic Preservation Act of 1966, as amended (16 U.S.C. 470), requires the head of any Federal agency with jurisdiction over a Federal, federally assisted or federally licensed undertaking that affects a property included in or eligible for inclusion in the National Register of Historic Places to take into account the effect of the undertaking on such property and afford the Council a reasonable opportunity to comment. Under the UDAG program, applicants assume the status of a Federal agency for purposes of complying with section 106.

§ 801.2 Definitions.

The terms defined in 36 CFR 800.2 shall be used in conjunction with this regulation. Furthermore, as used in these regulations:

(a) *Urban Development Action Grant (UDAG) Program* means the program of the Department of Housing and Urban Development (HUD) authorized by title I of the Housing and Community Development Act (HCDA) of 1977 (42 U.S.C. 5318) to assist revitalization efforts in distressed cities and urban counties which require increased public and private investment.

(b) *Applicant* means cities and urban counties or Pocket of Poverty Communities which meet the criteria at 24 CFR 570.453. Except as specifically provided below, applicants, rather than the Secretary of HUD, must comply with these regulations.

(c) *Project* means a commercial, industrial, and/or neighborhood project supported by the UDAG program of the Department of HUD, as defined in 24 CFR 570.451(g). A project includes the group of integrally related public and private activities described in the grant application which are to be carried out to meet the objectives of the action grant program and consists of all action grant funded activities together with all non-action grant funded activities. A project is an *undertaking* as defined in 36 CFR 800.2(c).

(d) *State Historic Preservation Officer Review Period* is a 45 day period provided to the appropriate State Historic Preservation Officer by section 110(c) of the Housing and Community Development Act (HCDA) of 1980 for comment on the formal submission by the applicant of data on properties listed in the National Register or which may meet the Criteria and which will be affected by the proposed UDAG project. This period does not include any period during which the applicant seeks information from the State Historic Preservation Officer to assist the applicant in identifying properties, determining whether a property meets the Criteria for listing in the National Register of Historic Places and determining whether such property is affected by the project.

(e) *Secretary of the Interior Determination Period* is a 45 day period provided by section 110(c) of the HCDA of 1980 for a determination as to whether the identified properties are eligible for inclusion in the National Register.

§ 801.3 Applicant responsibilities.

As early as possible before the applicant makes a final decision concerning a project and in any event prior to taking any action that would foreclose alternatives or the Council's ability to comment, the applicant should take the following steps to comply with the

requirements of section 106 of the National Historic Preservation Act and section 110 of the HCDA of 1980.

In order to facilitate the commenting process the applicant should forward to the Council information on the proposed project at the earliest practicable time if it appears that National Register properties or properties which meet the Criteria for inclusion will be affected. This will allow the Council to assist the applicant in expeditiously meeting its historic preservation requirements and facilitate the development of the Council's comments.

(a) *Information required.* It is the primary responsibility of the applicant requesting Council comments to conduct the appropriate studies and to provide the information necessary for a review of the effect a proposed project may have on a National Register property or a property which meets the Criteria, as well as the information necessary for adequate consideration of modifications or alterations to the proposed project that could avoid, mitigate, or minimize any adverse effects. It is the responsibility of the applicant to provide the information specified in § 801.7, to make an informed and reasonable evaluation of whether a property meets the National Register Criteria (36 CFR 60.6) and to determine the effect of a proposed undertaking on a National Register property or property which meets the Criteria.

(b) *Identification of properties.* Section 110 of the HCDA of 1980 makes UDAG applicants responsible for the identification of National Register properties and properties which may meet the Criteria for listing in the National Register that may be affected by the project. An appendix to these regulations sets forth guidance to applicants in meeting their identification responsibilities but does not set a fixed or inflexible standard for such efforts. Meeting this responsibility requires the applicant to make an earnest effort to identify and evaluate potentially affected historic properties by:

(1) Consulting the National Register of Historic Places to determine whether the project's impact area includes such properties;

(2) Obtaining, prior to initiating the State Historic Preservation Officer Review Period, relevant information that the State Historic Preservation Officer may have available concerning historic properties, if any are known, in the project's impact area;

(3) Utilizing local plans, surveys, and inventories of historic properties prepared by the locality or a recognized State or local historic authority;

(4) Utilizing other sources of information or advice the applicant deems appropriate;

(5) Conducting an on-the-ground inspection of the project's impact area by qualified personnel to identify properties which may meet the Criteria for evaluation taking into consideration the views of the State Historic Preservation Officer as to the need for and methodology of such inspections;

(6) Applying the Department of the Interior Criteria for Evaluation (36 CFR 60.6) to properties within the project's impact area.

(c) *Evaluation of effect.* Applicants are required by section 110(a) of the HCDA of 1980 to include in their applications a description of the effect of a proposed UDAG project on any National Register property and or any property which may meet the Criteria.

(1) *Criteria of Effect and Adverse Effect.* The following criteria, similar to those set forth in 36 CFR 800.3, shall be used to determine whether a project has an effect or an adverse effect.

(i) *Criteria of effect.* The effect of a project on a National Register or eligible property is evaluated in the context of the historical, architectural, archeological, or cultural significance possessed by the property. A project shall be considered to have an effect whenever any condition of the project causes or may cause any change, beneficial or adverse, in the quality of the historical, architectural, archeological, or cultural characteristics that qualify the property to meet the Criteria of the National Register. An effect occurs when a project changes the integrity of location, design, setting, materials, workmanship, feeling or association of the property that contributes to its significance in accordance with the National Register Criteria. An effect may be direct or indirect. Direct effects are caused by the project and occur at the same time and place. Indirect effects

include those caused by the undertaking that are later in time or farther removed in distance, but are still reasonably foreseeable. Such effects involve development of the project site around historic properties so as to affect the access to, use of, or significance of those properties.

(ii) *Criteria of adverse effect.* Adverse effects on National Register properties or properties which meet the Criteria may occur under conditions which include but are not limited to:

(A) Destruction or alteration of all or part of a property;

(B) Isolation from or alteration of the property's surrounding environment;

(C) Introduction of visual, audible, or atmospheric elements that are out of character with the property or alter its setting;

(D) Neglect of a property resulting in its deterioration or destruction;

(iii) *Special considerations.* If rehabilitation is a project activity, such components of the project may be considered to have no adverse effect and need not be referred to the Council if they are undertaken in accordance with the Secretary of the Interior's Standards for Historic Preservation Projects (U.S. Department of the Interior, Heritage Conservation and Recreation Service, Washington, DC, 1979) and the State Historic Preservation Officer concurs in the proposed activity. Additionally, the following types of project components or elements will be considered to not normally adversely affect properties listed in the National Register or which meet the Criteria.

(A) Insulation (except for the use of granular or liquid injected foam insulation in exterior walls or other vertical surfaces);

(B) Caulking;

(C) Weatherstripping;

(D) Replacement of Heating, Ventilating and Air Conditioning (HVAC) equipment, provided that such equipment is not historic and that replacement equipment is screened from public view and that the State Historic Preservation Officer and the applicant agree the equipment will not affect those qualities of the property which qualify it to meet the 36 CFR 60.6 Criteria;

(E) In-kind refenestration (for example, replacement of deteriorated windows of a similar configuration, color and material);

(F) Lowering of ceilings, provided the ceilings will not be visible from outside of the building or from an interior public space and that the State Historic Preservation Officer and the applicant agree it will not affect a quality which qualified the building to meet the 36 CFR 60.6 Criteria;

(G) Replacement in-kind of substantially deteriorated material, provided that the State Historic Preservation Officer and the applicant agree;

(H) Installation of machinery, equipment, furnishings, fixtures, etc., in the interior of existing buildings, provided that the State Historic Preservation Officer and the applicant agree such installations will not affect a quality which qualified the building to meet the 36 CFR 60.6 Criteria.

(I) Site improvements such as sidewalk paving and landscaping, provided that the State Historic Preservation Officer and the applicant agree that the site improvement will not affect those qualities of the property which qualify it to meet the 36 CFR 60.6 Criteria.

(iv) *Special considerations for archeological sites.* Under certain conditions, alteration of land containing archeological resources in the project area may have no adverse effect on those resources. Procedures for determining whether such conditions exist were published by the Council in the FEDERAL REGISTER on November 26, 1980 (45 FR 78808), as part X of the ''Executive Director's Procedures for Review of Proposals for Treatment of Archeological Properties.'' Because the identification of archeological sites in an urban context, and consideration of appropriate treatment methods, present special problems, further guidance is provided in Appendix 2.

(2) *Determinations of Effect.* Prior to submitting an application to HUD, the applicant shall apply the Criteria of Effect and Adverse Effect to all properties which are listed in the National

Register or which may meet the Criteria in the area of the project's potential environmental impact. The determination of the Secretary of the Interior shall be final with respect to properties which are eligible for listing in the National Register. The Council will not comment on affected properties which are not either listed in or eligible for listing in the National Register. In order to facilitate the process, information to be requested from the State Historic Preservation Officer under § 801.3(b)(2) should include advice on applying the Criteria of Effect and Adverse Effect provided that this period shall not be included in the 45 day State Historic Preservation Officer Review Period. Special attention should be paid to indirect effects, such as changes in land use, traffic patterns, street activity, population density and growth rate. While some aspects of a project may have little potential to adversely affect the significant qualities of a historic property, other project components may meet the Criteria of Effect and Adverse Effect. If any aspect of the project results in an effect determination, further evaluation of the effect shall be undertaken in accordance with these regulations. The resulting determination regarding the effect shall be included in the application.

(i) *No effect*. If the applicant determines that the project will have no effect on any National Register property and/or property which meets the Criteria, the project requires no further review by the Council unless a timely objection is made by the Executive Director. An objection may be made by the Executive Director at any time during the UDAG application process prior to the expiration of the period for receiving objections to HUD's release of funds as specified in 24 CFR 58.31. The manner in which the Executive Director shall make an objection is set forth in § 801.4(a).

(ii) *Determinations of no adverse effect*. If the applicant finds there is an effect on the property but it is not adverse, the applicant after receiving the comments of the State Historic Preservation Officer during the State Historic Preservation Officer Review Period shall forward adequate documentation (see § 801.7(a)) of the Determination, including the written comments of the State Historic Preservation Officer, if available, to the Executive Director for review in accordance with § 801.4.

(iii) *Adverse effect determination*. If the applicant finds the effect to be adverse or if the Executive Director objects to an applicant's no adverse effect determination pursuant to § 801.4(a), the applicant shall proceed with the consultation process in accordance with § 801.4(b).

§ 801.4 Council comments.

The following subsections specify how the Council will respond to an applicant's request for the Council's comments required to satisfy the applicant's responsibilities under section 106 of the Act and section 110 of the HCDA of 1980. When appropriate, an applicant may waive the Council time periods specified in these regulations.

(a) *Executive Director's Objection to No Effect Determination*. If the Executive Director has reason to question an applicant's determination of no effect, he shall notify the applicant and HUD. If the Executive Director does not object within 15 days of such notification, the project may proceed. If the Executive Director objects, he shall specify whether or not the project will have an adverse effect on National Register property and/or property which meets the Criteria. Normally, the Executive Director will object to a determination of no effect when the record does not support the applicant's determination (see § 801.7(a)). The applicant must then comply with the provisions of subsection (b) if the Executive Director determines that the project will have no adverse effect or subsection (c) if the Executive Director has determined that the project will have an adverse effect.

(b) *Response to Determinations of No Adverse Effect*. (1) Upon receipt of a Determination of No Adverse Effect from an applicant, the Executive Director will review the Determination and supporting documentation required by § 801.7(a). Failure to provide the required information at the time the applicant requests Council comments will delay the process. The Executive Director will respond to the applicant within 15 days after receipt of the information

required in §801.7(a). Unless the Executive Director objects to the Determination within 15 days after receipt, the applicant will be considered to have satisfied its responsibilities under section 106 of the Act and these regulations and no further Council review is required.

(2) If the Executive Director objects to a Determination of No Adverse Effect, the consultation process pursuant to §801.4(c) shall be initiated.

(c) *Consultation process*. If any aspect of the project is found to have adverse effects on National Register property or property which has been determined by the applicant or the Secretary of the Interior to meet the Criteria, the applicant, the State Historic Preservation Officer and the Executive Director shall consult to consider feasible and prudent alternatives to the project that could avoid, mitigate, or minimize the adverse effect on the affected property.

(1) *Parties*. The applicant, the State Historic Preservation Officer and the Executive Director shall be the consulting parties. The Department of HUD, other representatives of national, State, or local units of government, other parties in interest, and public and private organizations, may be invited by the consulting parties to participate in the consultation process.

(2) *Timing*. The consulting parties shall have a total of 45 days from the receipt by the Executive Director of the information required in §801.7(a) to agree upon feasible and prudent alternatives to avoid, mitigate, or minimize any adverse effects of the project. Failure of an applicant to provide the information required in §801.7(b) will delay the beginning of the time period specified above.

(3) *Information requirements*. The applicant shall provide copies of the information required in §801.7(b) to the consulting parties at the initiation of the consultation process and make it readily available for public inspection.

(4) *Public meeting*. An onsite inspection and a Public Information Meeting may be held in accordance with the provisions of 36 CFR 800.6(b). Public hearings or meetings conducted by the applicant in the preparation of the application may, as specified below, substitute for such Public Information Meetings. Upon request of the applicant, the Executive Director may find that such public meetings have been adequate to consider the effect of the project on National Register properties or properties which meet the Criteria, and no further Public Information Meeting is required.

(5) *Consideration of alternatives*. During the consultation period, the consulting parties shall, in accordance with the policies set forth in 36 CFR 800.6(b) (4) and (5), review the proposed project to determine whether there are prudent and feasible alternatives to avoid or satisfactorily mitigate adverse effect. If they agree on such alternatives, they shall execute a Memorandum of Agreement in accordance with §801.4(c) specifying how the undertaking will proceed to avoid or mitigate the adverse effect.

(6) *Acceptance of adverse effect*. If the consulting parties determine that there are no feasible and prudent alternatives that could avoid or satisfactorily mitigate the adverse effects and agree that it is in the public interest to proceed with the proposed project they shall execute a Memorandum of Agreement in accordance with §801.4(c) acknowledging this determination and specifying any recording, salvage, or other measures associated with acceptance of the adverse effects that shall be taken before the project proceeds.

(7) *Failure to agree*. Upon the failure of the consulting parties to agree upon the terms for a Memorandum of Agreement within the specified time period, or upon notice of a failure to agree by any consulting party to the Executive Director, the Executive Director within 15 days shall recommend to the Chairman whether the matter should be scheduled for consideration at a Council meeting. If the Executive Director recommends that the Council not consider the matter, he shall simultaneously notify all Council members and provide them copies of the preliminary case report and the recommendation to the Chairman. The applicant and the State Historic Preservation Officer shall be notified in writing of the Executive Director's recommendation.

(d) *Memorandum of Agreement*—(1) *Preparation of Memorandum of Agreement.* It shall be the responsibility of the Executive Director to prepare each Memorandum of Agreement required under this part. As appropriate, other parties may be invited by the consulting parties to be signatories to the Agreement or otherwise indicate their concurrence with the Agreement. In order to facilitate the process, the applicant may provide the Executive Director a draft for a Memorandum of Agreement. At the applicant's option, such draft may be prepared at the time the applicant makes its determinations that properties listed in the National Register or which may meet the Criteria for listing in the National Register may be adversely affected. The applicant must provide the State Historic Preservation Officer an opportunity to concur in or comment on its draft Agreement.

(2) *Review of Memorandum of Agreement.* Upon receipt of an executed Memorandum of Agreement, the Chairman shall institute a 15 day review period. Unless the Chairman notifies the applicant that the matter has been placed on the agenda for consideration at a Council meeting, the Agreement shall become final when ratified by the Chairman or upon the expiration of the 15 day review period with no action taken. Copies will be provided to signatories. A copy of the Memorandum of Agreement should be included in any Environmental Assessment or Environmental Impact Statement prepared pursuant to the National Environmental Policy Act.

(3) *Effect of Memorandum of Agreement.* (i) Agreements duly executed in accordance with these regulations shall constitute the comments of the Council and shall evidence satisfaction of the applicant's responsibilities for the proposed project under section 106 of the Act and these regulations.

(ii) If the Council has commented on an application that is not approved by HUD and a subsequent UDAG application is made for the same project, the project need not be referred to the Council again unless there is a significant amendment to the project which would alter the effect of the project on previously considered properties or result in effects on additional National Register properties or properties which meet the Criteria.

(iii) Failure to carry out the terms of a Memorandum of Agreement requires that the applicant again request the Council's comments in accordance with these regulations. In such instances, until the Council issues its comments under these regulations the applicant shall not take or sanction any action or make any irreversible or irretrievable commitment that could result in an adverse effect with respect to National Register properties or properties which are eligible for inclusion in the National Register covered by the Agreement or that would foreclose the Council's consideration of modifications or alternatives to the proposed project that could avoid or mitigate the adverse effect.

(4) *Amendment of a Memorandum of Agreement.* Amendments to the Agreement may be made as specified in 36 CFR 800.6(c)(4).

(5) *Report on Memorandum of Agreement.* Within 90 days after carrying out the terms of the Agreement, the applicant shall report to all signatories on the actions taken.

(e) *Council Meetings.* Council meetings to consider a project will be conducted in accordance with the policies set forth in 36 CFR 800.6(d).

(1) *Response to recommendation concerning consideration at Council meeting.* Upon receipt of a recommendation from the Executive Director concerning consideration of a proposed project at a Council meeting, the Chairman shall determine whether or not the project will be considered. The Chairman shall make a decision within 15 days of receipt of the recommendation of the Executive Director. In reaching a decision the Chairman shall consider any comments from Council members. If three members of the Council object within the 15 day period to the Executive Director's recommendation, the project shall be scheduled for consideration at a Council or panel meeting. Unless the matter is scheduled for consideration by the Council the Chairman shall notify the applicant, the Department of HUD, the State Historic Preservation Officer and other parties known to be interested of

the decision not to consider the matter. Such notice shall be evidence of satisfaction of the applicant's responsibilities for the proposed project under section 106 of the Act and these regulations.

(2) *Decision to consider the project.* When the Council will consider a proposed project at a meeting, the Chairman shall either designate five members as a panel to hear the matter on behalf of the full Council or schedule the matter for consideration by the full Council. In either case, the meeting shall take place within 30 days of the Chairman's decision to consider the project, unless the applicant agrees to a longer time.

(i) A panel shall consist of three non-Federal members, one as Chairman, and two Federal members. The Department of HUD may not be a member of such panel.

(ii) Prior to any panel or full Council consideration of a matter, the Chairman will notify the applicant and the State Historic Preservation Officer and other interested parties of the date on which the project will be considered. The Executive Director, the applicant, the Department of HUD, and the State Historic Preservation Officer shall prepare reports in accordance with § 801.7(b). Reports from the applicant and the State Historic Preservation Officer must be received by the Executive Director at least 7 days before any meeting.

(3) *Notice of Council meetings.* At least 7 days notice of all meetings held pursuant to this section shall be given by publication in the FEDERAL REGISTER. The Council shall provide a copy of the notice by mail to the applicant, the State Historic Preservation Officer, and the Department of Housing and Urban Development. The Council will inform the public of the meeting through appropriate local media.

(4) *Statements to the Council.* An agenda shall provide for oral statements from the Executive Director; the applicant; the Department of HUD; parties in interest; the Secretary of the Interior; the State Historic Preservation Officer; representatives of national, State, or local units of government; and interested public and private organizations and individuals. Parties wishing to make oral remarks should notify the Executive Director at least two days in advance of the meeting. Parties wishing to have their written statements distributed to Council members prior to the meeting should send copies of the statements to the Executive Director at least 5 days in advance.

(5) *Comments of the Council.* The written comments of the Council will be issued within 7 days after a meeting. Comments by a panel shall be considered the comments of the full Council. Comments shall be made to the applicant requesting comment and to the Department of HUD. Immediately after the comments are made to the applicant and the Department of HUD, the comments of the Council will be forwarded to the President and the Congress as a special report under authority of section 202(b) of the Act and a notice of availability will be published in the FEDERAL REGISTER. The comments of the Council shall be made available to the State Historic Preservation Officer, other parties in interest, and the public upon receipt of the comments by the applicant. The applicant should include the comments of the Council in any final Environmental Impact Statement prepared pursuant to the National Environmental Policy Act.

(6) *Action in response to Council comments.* The comments of the Council shall be taken into account in reaching a final decision on the proposed project. When a final decision regarding the proposed project is reached by the applicant and the Department of HUD, they shall submit written reports to the Council describing the actions taken by them and other parties in response to the Council's comments and the impact that such actions will have on the affected National Register properties or properties eligible for inclusion in the National Register. Receipt of this report by the Chairman shall be evidence that the applicant has satisfied its responsibilities for the proposed project under section 106 of the Act and these regulations. The Council may issue a final report to the President and the Congress under authority of section 202(b) of the Act describing the actions taken in response to the

Council's comments including recommendations for changes in Federal policy and programs, as appropriate.

(f) *Suspense of Action*. Until the Council issues its comments under these regulations and during the State Historic Preservation Officer Review Period and the determination period of the Secretary of the Interior, good faith consultation shall preclude the applicant from taking or sanctioning any action or making any irreversible or irretrievable commitment that could result in an adverse effect on a National Register property or property which may meet the Criteria or that would foreclose the consideration of modifications or alternatives to the proposed project that could avoid, mitigate, or minimize such adverse effects. In no case shall UDAG funds be used for physical activities on the project site until the Council comments have been completed. Normal planning and processing of applications short of actual commitment of funds to the project may proceed.

(g) *Lead Agency*. If the project proposed by the applicant involves one or more Federal agencies, they may agree on a single lead agency to meet the requirements of section 106 of the National Historic Preservation Act and section 110 of the Housing and Community Development Act of 1980 and notify the Executive Director. If the applicant is the designated lead agency, these regulations shall be followed. If a Federal agency is designated lead agency, the process in 36 CFR part 800 shall be used.

(h) *Compliance by a Federal Agency*. An applicant may make a finding that it proposes to accept a Federal agency's compliance with section 106 of the Act and 36 CFR 800 where its review of the Federal agency's findings indicate that:

(1) The project is identical with an undertaking reviewed by the Council under 36 CFR part 800; and

(2) The project and its impacts are included within the area of potential environmental impact described by the Federal agency;

The applicant shall notify the State Historic Preservation Officer and the Executive Director of its finding of compliance with section 106 of the Act and 36 CFR part 800 and provide a copy of the Federal agency's document where the finding occurs. Unless the Executive Director objects within 10 days of receipt of such notice the Council need not be afforded further opportunity for comment. If the Executive Director objects to the finding of the applicant, the applicant shall comply with § 801.4.

§ 801.5 State Historic Preservation Officer responsibilities.

(a) The State Historic Preservation Officer shall have standing to participate in the review process established by section 110(c) of the HCDA of 1980 whenever it concerns a project located within the State Historic Preservation Officer's jurisdiction by the following means: providing, within 30 days, information requested by an applicant under § 801.3(b); responding, within 45 days, to submittal of a determination by the applicant under section 110 of the HCDA of 1980 that National Register property or property which meets the Criteria may be affected by the proposed project; participating in a Memorandum of Agreement that the applicant or the Executive Director may prepare under this part; and participating in a panel or full Council meeting that may be held pursuant to these regulations. Pursuant to section 110(c) of the HCDA of 1980, the State Historic Preservation Officer has a maximum period of 45 days in which to formally comment on an applicant's determination that the project may affect a property that is listed in the National Register or which may meet the Criteria for listing in the National Register. This period does not include the time during which the applicant seeks information from the State Historic Preservation Officer for determining whether a property meets the Criteria for listing in the National Register and whether such property is affected by the project.

(b) The failure of a State Historic Preservation Officer to participate in any required steps of the process set forth in this part shall not prohibit the Executive Director and the applicant from concluding the section 106 process, including the execution of a Memorandum of Agreement.

§801.6 Coordination with requirements under the National Environmental Policy Act (42 U.S.C. 4321 *et seq.*).

The National Historic Preservation Act and the National Environmental Policy Act create separate and distinct responsibilities. The National Historic Preservation Act applies to those aspects of a project which may affect National Register properties and those which are eligible for listing in the National Register. The requirements for the National Environmental Policy Act apply to the effect that the project will have on the human environment. To the extent that the applicant finds it practicable to do so, the requirements of these two statutes should be integrated. Some projects, for reasons other than the effects on historic properties, may require an Environmental Impact Statement (EIS) subject to the time requirements for a draft and final EIS, in which case the applicant may choose to separately relate to the State Historic Preservation Officer, the Department of the Interior, and the Council for purposes of section 110(c) of the HCDA of 1980. In that event, information in the draft EIS should indicate that compliance with section 106 and these regulations is underway and the final EIS should reflect the results of this process. Applicants are directed to 36 CFR 800.9, which describes in detail the manner in which the requirements of these two acts should be integrated and applies to all UDAG applicants under these regulations.

In those instances in which an Environmental Impact Statement will be prepared for the project, the applicant should consider phasing compliance with these procedures and the preparation of the Statement.

§801.7 Information requirements.

(a) *Information To Be Retained by Applicants Determining No Effect.* (1) Recommended Documentation for a Determination of No Effect. Adequate documentation of a Determination of No Effect pursuant to §801.3(c)(2)(i) should include the following:

(i) A general discussion and chronology of the proposed project;

(ii) A description of the proposed project including, as appropriate, photographs, maps, drawings, and specifications;

(iii) A statement that no National Register property or property which meets the Criteria exist in the project area, or a brief statement explaining why the Criteria of Effect (See §801.3(c)) was found inapplicable;

(iv) Evidence of consultation with the State Historic Preservation Officer concerning the Determination of No Effect; and

(v) Evidence of efforts to inform the public concerning the Determination of No Effect.

(2) The information requirements set forth in this section are meant to serve as guidance for applicants in preparing No Effect Determinations. The information should be retained by the applicant, incorporated into any environmental reports or documents prepared concerning the project, and provided to the Executive Director only in the event of an objection to the applicant's determination.

(b) *Reports to the Council.* In order to adequately assess the impact of a proposed project on National Register and eligible properties, it is necessary for the Council to be provided certain information. For the purposes of developing Council comments on UDAG projects the following information is required. Generally, to the extent that relevant portions of a UDAG application meet the requirements set forth below it will be sufficient for the purposes of Council review and comment.

(1) *Documentation for Determination of No Adverse Effect.* Adequate documentation of a Determination of No Adverse Effect pursuant to §801.3(c)(1) should include the following:

(i) A general discussion and chronology of the proposed project;

(ii) A description of the proposed project including, as appropriate, photographs, maps, drawings and specifications;

(iii) A copy of the National Register form or a copy of the Determination of Eligibility documentation for each property that will be affected by the project including a description of each property's physical appearance and significance;

(iv) A brief statement explaining why each of the Criteria of Adverse Effect

(See § 801.3(c)(1)) was found inapplicable;

(v) Written views of the State Historic Preservation Officer concerning the Determination of No Adverse Effect, if available; and,

(vi) An estimate of the cost of the project including the amount of the UDAG grant and a description of any other Federal involvement.

(2) *Preliminary Case Reports*. Preliminary Case Reports should be submitted with a request for comments pursuant to § 801.4(b) and should include the following information:

(i) A general discussion and chronology of the proposed project;

(ii) The status of the project in the HUD approval process:

(iii) The status of the project in the National Environmental Policy Act compliance process and the target date for completion of all the applicant's environmental responsibilities;

(iv) A description of the proposed project including as appropriate, photographs, maps, drawings and specifications;

(v) A copy of the National Register form or a copy of the Determination of Eligibility documentation for each property that will be affected by the project including a description of each property's physical appearance and significance;

(vi) A brief statement explaining why any of the Criteria of Adverse Effect (See § 801.3(c)(1)(b)) apply;

(vii) Written views of the State Historic Preservation Officer concerning the effect on the property, if available;

(viii) The views of Federal agencies, State and local governments, and other groups or individuals when known as obtained through the OMB Circular A–95 process or the environmental review process, public hearings or other applicant processes;

(ix) A description and analysis of alternatives that would avoid the adverse effects;

(x) A description and analysis of alternatives that would mitigate the adverse effects; and,

(xi) An estimate of the cost of the project including the amount of the UDAG grant and a description of any other Federal involvement.

(c) *Reports for Council Meetings*. Consideration of a proposed project by the full Council or a panel pursuant to § 801.4(b) is based upon reports from the Executive Director, the State Historic Preservation Officer and Secretary of the Interior. Requirements for these reports are specified in 36 CFR 800.13(c). Additionally, reports from the applicant and the Department of HUD are required by these regulations. The requirements for these reports consist of the following:

(1) *Report of the Applicant*. The report from the applicant requesting comments shall include a copy of the relevant portions of the UDAG application; a general discussion and chronology of the proposed project; an account of the steps taken to comply with the National Environmental Policy Act (NEPA); any relevant supporting documentation in studies that the applicant has completed; an evaluation of the effect of the project upon the property or properties, with particular reference to the impact on the historical, architectural, archeological, and cultural values; steps taken or proposed by the applicant to avoid or mitigate adverse effects of the project; a thorough discussion of alternate courses of action; and an analysis comparing the advantages resulting from the project with the disadvantages resulting from the adverse effects on National Register or eligible properties.

(2) *Report of the Secretary of Housing and Urban Development*. The report from the Secretary shall include the status of the application in the UDAG approval process, past involvement of the Department with the applicant and the proposed project or land area for the proposed project, and information on how the applicant has met other requirements of the Department for the proposed project.

§ 801.8 Public participation.

(a) The Council encourages maximum public participation in the process established by these regulations. Particularly important, with respect to the UDAG program, is participation by the citizens of neighborhoods directly or indirectly affected by projects, and by groups concerned with historic and cultural preservation.

(b) The applicant, in preparing and following its citizen participation plan called for by 24 CFR 570.456(c)(11)(i)(A), should ensure that adequate provision is made for participation by citizens and organizations having interests in historic preservation and in the historic and cultural values represented in affected neighborhoods. 24 CFR 570.431(c) sets forth criteria for citizen participation plans. These should be carefully considered with specific reference to ensuring that local concerns relevant to historic preservation are fully identified, and that citizens are provided with full and accurate information about each project and its effects on historic properties. The applicant should ensure that potentially concerned citizens and organizations are fully involved in the identification of properties which may meet the National Register Criteria, and that they are fully informed, in a timely manner, of determinations of No Effect, No Adverse Effect, and Adverse Effect, and of the progress of the consultation process. Applicants are referred to 36 CFR 800.15 for Council guidelines for public participation.

(c) The Council welcomes the views of the public, especially those groups which may be affected by the proposed project, during its evaluation of the applicant's determination of effect, and will solicit the participation of the public in Council and panel meetings held to consider projects.

APPENDIX 1 TO PART 801—IDENTIFICATION OF PROPERTIES: GENERAL

A. Introduction

Because of the high probability of locating properties which are listed in the National Register or which meet the Criteria for listing in many older city downtowns, this appendix is designed to serve as guidance for UDAG applicants in identifying such properties. This appendix sets forth guidance for applicants and does not set a fixed or inflexible standard for identification efforts.

B. Role of the State Historic Preservation Officer

In any effort to locate National Register properties or properties which meet the Criteria, the State Historic Preservation Officer is a key source of information and advice. The State Historic Preservation Officer will be of vital assistance to the applicant. The State Historic Preservation Officer can provide information on known properties and on studies which have taken place in and around the project area. Early contact should be made with the State Historic Preservation Officer for recommendations about how to identify historic properties. For UDAG projects, identification of National Register properties and properties which meet the Criteria is the responsibility of the applicant. The extent of the identification effort should be made with the advice of the State Historic Preservation Officer. The State Historic Preservation Officer can be a knowledgeable source of information regarding cases wherein the need for a survey of historic properties is appropriate, recommended type and method of a survey and the boundaries of any such survey. Due consideration should be given to the nature of the project and its impacts, the likelihood of historic properties being affected and the state of existing knowledge regarding historic properties in the area of the project's potential environmental impact.

C. Levels of Identification

1. The area of the project's potential environmental impact consists of two distinct subareas: that which will be disturbed directly (generally the construction site and its immediate environs) and that which will experience indirect effects. Within the area of indirect impact, impacts will be induced as a result of carrying the project out. Historic and cultural properties subject to effect must be identified in both subareas, and the level of effort necessary in each may vary. The level of effort needed is also affected by the stage of planning and the quality of pre-existing information. Obviously, if the area of potential environmental impact has already been fully and intensively studied before project planning begins, there is no need to duplicate this effort. The State Historic Preservation Officer should be contacted for information on previous studies. If the area has not been previously intensively studied, identification efforts generally fall into three levels:

a. *Overview Study:* This level of study is normally conducted as a part of general planning and is useful at an early stage in project formulation. It is designed to obtain a general understanding of an area's historic and cultural properties in consultation with the State Historic Preservation Officer, by:

(1) Assessing the extent to which the area has been previously subjected to study;

(2) Locating properties previously recorded;

(3) Assessing the probability that properties eligible for the National Register will be found if the area is closely inspected, and

(4) Determining the need, if any, for further investigation.

An overview study includes study of pertinent records (local histories, building inventories, architectural reports, archeological survey reports, etc.), and usually some minor on-the-ground inspection.

b. *Identification Study:* An identification study attempts to specifically identify and record all properties in an area that may meet the criteria for listing in the National Register. In conducting the study, the applicant should seek the advice of the State Historic Preservation Officer regarding pertinent background data. A thorough on-the-ground inspection of the subject area by qualified personnel should be undertaken. For very large areas, or areas with uncertain boundaries, such a study may focus on representative sample areas, from which generalizations may be made about the whole.

c. *Definition and Evaluation Study:* If an overview and/or an identification study have indicated the presence or probable presence of properties that may meet the National Register Criteria but has not documented them sufficiently to allow a determination to be made about their eligibility, a definition and evaluation study is necessary. Such a study is directed at specific potentially eligible properties or at areas known or suspected to contain such properties. It includes an intensive on-the-ground inspection and related studies as necessary, conducted by qualified personnel, and provides sufficient information to apply the National Register's ''Criteria for Evaluation'' (36 CFR 60.6).

2. An overview study will normally be needed to provide basic information for planning in the area of potential environmental impact. Unless this study indicates clearly that no further identification efforts are needed (e.g., by demonstrating that the entire area has already been intensively inspected with negative results, or by demonstrating that no potentially significant buildings have ever been built there and there is virtually no potential for archeological resources), and identification study will probably be needed within the area of potential environmental impact. This study may show that there are no potentially eligible properties within the area, or may show that only a few such properties exist and document them sufficiently to permit a determination of eligibility to be made in accordance with 36 CFR part 60. Alternatively, the study may indicate that potentially eligible properties exist in the area, but may not document them to the standards of 36 CFR part 60. Should this occur, a definition and evaluation study is necessary for those properties falling within the project's area of direct effect and for those properties subject to indirect effects. If a property falls within the general area of indirect effect, but no indirect effects are actually anticipated on the property in question, a definition and evaluation study will normally be superfluous.

APPENDIX 2 TO PART 801—SPECIAL PROCEDURES FOR IDENTIFICATION AND CONSIDERATION OF ARCHEOLOGICAL PROPERTIES IN AN URBAN CONTEXT

A. Archeological sites in urban contexts are often difficult to identify and evaluate in advance of construction because they are sealed beneath modern buildings and structures. Prehistoric and historic sites within cities may be important both to science and to an understanding of each city's history, however, and should be considered in project planning. Special methods can be used to ensure effective and efficient consideration and treatment of archeological sites in UDAG projects.

1. If it is not practical to physically determine the existence or nonexistence of archeological sites in the project area, the probability or improbability of their existence can be determined, in most cases, through study of:

a. Information on the pre-urban natural environment, which would have had an effect on the location of prehistoric sites;

b. Information from surrounding areas and general literature concerning the location of prehistoric sites;

c. State and local historic property registers or inventories;

d. Archeological survey reports;

e. Historic maps, atlases, tax records, photographs, and other sources of information on the locations of earlier structures;

f. Information on discoveries of prehistoric or historic material during previous construction, land levelling, or excavation, and

g. Some minor on-the-ground inspection.

2. Should the study of sources such as those listed in section (1)(a) above reveal that the following conditions exist, it should be concluded that a significant likelihood exists that archeological sites which meet the National Register Criteria exist on the project site:

a. Discoveries of prehistoric or historic material remains have been reliably reported on or immediately adjacent to the project site, and these are determined by the State Historic Preservation Officer or other archeological authority to meet the Criteria for the National Register because of their potential value for public interpretation or the study of significant scientific or historical research problems; or

b. Historical or ethnographic data, or discoveries of material, indicate that a property of potential cultural value to the community or some segment of the community (e.g., a cemetery) lies or lay within the project site; or

c. The pre-urbanization environment of the project site would have been conducive to prehistoric occupation, or historic buildings or occupation sites are documented to have existed within the project site in earlier

times, and such sites or buildings are determined by the State Historic Preservation Officer or other archeological authority to meet the Criteria of the National Register because of their potential value for public interpretation or the study of significant scientific or historical research questions, and

d. The recent history of the project site has not included extensive and intensive ground disturbance (grading, blasting, cellar digging, etc.) in the location, or extending to the depth at which the remains of significant sites, buildings, or other features would be expected.

B. Where review of sources of information such as those listed in section (1)(a) above reveals no significant likelihood that archeological resources which meet the National Register Criteria exist on the project site, no further review is required with respect to archeology provided the State Historic Preservation Officer concurs.

C. Where review of sources of information such as those listed in section (1)(a) above, reveals that archeological resources which meet the National Register Criteria are likely to exist on the project site, but these resources are so deeply buried that the project will not intrude upon them, or they are in a portion of the project site that will not be disturbed, a determination of ''No Effect'' is appropriate in accordance with § 801.3(c)(2)(i).

D. Where review of sources of information such as those listed in section (1)(a) above, reveals that archeological resources which meet the Criteria exist or are likely to exist on the project site, and that the project is likely to disturb them, a determination of ''No Adverse Effect'' may be made in accordance with § 801.3(c)(2)(ii) if:

1. The applicant and/or developer is committed to fund a professionally supervised and planned pre-construction testing program, and to modification of the project in consultation with the State Historic Preservation Officer to protect or incorporate within the project the archeological resources discovered with a minimum of damage to them, or if:

2. The applicant and/or developer is committed to fund a professionally supervised and planned archeological salvage program, coordinated with site clearing and construction, following the standards of the Secretary of the Interior issued pursuant to the Archeological and Historic Preservation Act (16 U.S.C. 469) and the applicant finds that this program negates the adverse effect, in accordance with the standards set forth in section X of the Council's ''Supplementary Guidance for Review of Proposals for Treatment of Archeological Properties'' (45 FR 78808).

E. When archeological sites included in the National Register or which meet the Criteria are found to exist on the project site or in the area of the project's environmental impact, and where the project is likely to disturb such resources, and where the adverse effect of such disturbance cannot be negated by archeological salvage, a determination of ''Adverse Effect'' is appropriate in accordance with § 801.3(a)(2)(iii).

PART 805—PROCEDURES FOR IMPLEMENTATION OF NATIONAL ENVIRONMENTAL POLICY ACT

Sec.
805.1 Background.
805.2 Purpose.
805.3 Applicability.
805.4 Ensuring environmental documents are actually considered in Council decisionmaking.
805.5 Typical classes of action.
805.6 Interagency cooperation.
805.7 Environmental information.

AUTHORITY: Pub. L. 89–665, 80 Stat. 915 (16 U.S.C. 470), as amended, 84 Stat. 204 (1970), 87 Stat. 139 (1973), 90 Stat. 1320 (1976), 92 Stat. 3467 (1978); E.O. 11593, 3 CFR 1971 Comp., p. 154; President's Memorandum on Environmental Quality and Water Resources Management, July 12, 1978.

SOURCE: 45 FR 4353, Jan. 22, 1980, unless otherwise noted.

§ 805.1 Background.

(a) The National Environmental Policy Act (NEPA) of 1969 (42 U.S.C. 4321 *et seq.*) establishes national policies and goals for the protection of the environment. Section 102(2) of NEPA contains certain procedural requirements directed toward the attainment of such goals. In particular, all Federal agencies are required to give appropriate consideration to the environmental effects of their proposed actions in their decisionmaking and to prepare detailed environmental statements on recommendations or reports on proposals for legislation and other major Federal actions significantly affecting the quality of the human environment.

(b) Executive Order 11991 of May 24, 1977, directed the Council on Environmental Quality (CEQ) to issue regulations to implement the procedural provisions of NEPA. Accordingly, CEQ issued final NEPA regulations (40 CFR parts 1500–1508) on November 29, 1978, which are binding on all Federal agencies as of July 30, 1979. These regulations provide that each Federal agency shall as necessary adopt implementing

procedures to supplement the regulations. Section 1507.3(b) of the NEPA regulations identifies those sections of the regulations which must be addressed in agency procedures.

§ 805.2 Purpose.

The purpose of this part is to establish Council procedures that supplement the NEPA regulations and provide for the implementation of those provisions identified in § 1507.3(b) of the regulations (40 CFR 1507.3(b)).

§ 805.3 Applicability.

(a) These procedures apply to actions of the full Council and the Council staff acting on behalf of the full Council.

(b) The following actions are covered by these procedures:

(1) Recommendations for legislation.

(2) Regulations implementing section 106 of the National Historic Preservation Act (NHPA).

(3) Procedures implementing other authorities.

(4) Policy recommendations that do not require implementation by another Federal agency.

(c) In accordance with § 1508.4 of the NEPA regulations (40 CFR 1508.4), Council comments on Federal, federally assisted and federally licensed undertakings provided pursuant to section 106 of the NHPA and 36 CFR part 800 are categorically excluded from these procedures. This exclusion is justified because Federal agencies seeking the Council's comments under section 106 have the responsibility for complying with NEPA on the action they propose. The Council's role is advisory and its comments are to be considered in the agency decisionmaking process. Coordination between the section 106 and the NEPA processes is set forth in 36 CFR 800.9.

§ 805.4 Ensuring environmental documents are actually considered in Council decisionmaking.

(a) Section 1505.1 of the NEPA regulations (40 CFR 1505.1) contains requirements to ensure adequate consideration of environmental documents in agency decisionmaking. To implement these requirements the Council shall:

(1) Consider all relevant environmental documents in evaluating proposals for action;

(2) Ensure that all relevant environmental documents, comments, and responses accompany the proposal through internal Council review processes;

(3) Consider only those alternatives encompassed by the range of alternatives discussed in the relevant environmental documents when evaluating proposals for the Council action; and,

(4) Where an environmental impact statement (EIS) has been prepared consider the specific alternative analyzed in the EIS when evaluating the proposal which is the subject of the EIS.

(b) For each of the Council's principal activities covered by NEPA, the following chart identifies the point at which the NEPA process begins, the point at which it ends, and the key officials required to consider environmental documents in their decisionmaking.

Activity	Start of NEPA process	Completion of NEPA process	Key officials required to consider environmental documents
Recommendations for legislation.	During staff formulation of proposal.	Prior to submission to Congress or OMB.	Executive Director and full Council, as appropriate.
Regulations and procedures ...	Prior to publication of draft regulations in FEDERAL REGISTER.	Prior to publication of final regulations in FEDERAL REGISTER.	Executive Director and full Council as appropriate.
Policy recommendations	During staff formulation of proposal.	Prior to adoption by full Council or Executive Director.	Executive Director and full Council, as appropriate.

§ 805.5 Typical classes of action.

(a) Section 1507.3(c)(2) (40 CFR 1507.3(c)(2)) in conjunction with § 1508.4 requires agencies to establish three typical classes of action for similar treatment under NEPA: actions normally requiring EIS; actions normally requiring assessments but not necessarily EISs; and actions normally not requiring assessments or EISs. Each of

the covered categories of Council actions generally falls within the second category, normally requiring an assessment but not necessarily an EIS.

(b) The Council shall independently determine whether an EIS or an environmental assessment is required where:

(1) A proposal for Council action is not covered by one of the typical classes of action above; or

(2) For actions which are covered, the presence of extraordinary circumstances indicates that some other level of environmental review may be appropriate.

§ 805.6 Interagency cooperation.

The Council shall consult with appropriate Federal and non-Federal agencies and with interested private persons and organizations when it is considering actions involving such parties and requiring environmental assessments. Where other Federal agencies are involved in the proposed action, the Council shall cooperate in the required environmental assessment and the preparation of necessary environmental documents. Where appropriate as determined by the nature and extent of Council involvement in the proposed action, the Council shall assume the status of lead agency.

§ 805.7 Environmental information.

Interested persons may contact the Executive Director for information regarding the Council's compliance with NEPA.

PART 810—FREEDOM OF INFORMATION ACT REGULATIONS

Sec.

810.1 Purpose and scope.
810.2 Procedure for requesting information.
810.3 Action on requests.
810.4 Appeals.
810.5 Fees.
810.6 Exemptions.

AUTHORITY: Pub. L. 89–665, 80 Stat. 915 (16 U.S.C. 470) as amended by Pub. L. 91–243, Pub. L. 93–54, Pub. L. 94–422, Pub. L. 94–458, Pub. L. 96–199, Pub. L. 96–244, Pub. L. 96–515.

SOURCE: 46 FR 45334, Sept. 11, 1981, unless otherwise noted.

§ 810.1 Purpose and scope.

This subpart contains the regulations of the Advisory Council on Historic Preservation implementing the Freedom of Information Act (5 U.S.C. 552). Procedures for obtaining the records covered by the Act are established in these regulations. Persons seeking information or records of the Council are encouraged to consult first with the staff of the Council before filing a formal request under the Act pursuant to these regulations. The informal exchange of information is encouraged wherever possible.

§ 810.2 Procedure for requesting information.

(a) Requests for information or records not available through informal channels shall be directed to the Administrative Officer, Advisory Council on Historic Preservation, 1522 K Street NW., Washington, DC 20005. All such requests should be clearly marked ''FREEDOM OF INFORMATION REQUEST'' in order to ensure timely processing. Requests that are not so marked will be honored, but will be deemed not to have been received by the Council, for purposes of computing the response time, until the date on which they are identified by a member of the Council staff as being a request pursuant to the Freedom of Information Act.

(b) Requests should describe the records sought in sufficient detail to allow Council staff to locate them with a reasonable amount of effort. Thus, where possible, specific information, including dates, geographic location of cases, and parties involved, should be supplied.

(c) A request for all records falling within a reasonably specific category shall be regarded as conforming to the statutory requirement that records be reasonably described if the records can be identified by any process that is not unreasonably burdensome or disruptive of Council operations.

(d) If a request is denied on the ground that it does not reasonably describe the records sought, the denial shall specify the reasons why the request was denied and shall extend to the requester an opportunity to confer

with Council staff in order to reformulate the request in sufficient detail to allow the records to be produced.

§ 810.3 Action on requests.

(a) Once a requested record has been identified, the Administrative Officer shall notify the requester of a date and location where the records may be examined or of the fact that copies are available. The notification shall also advise the requester of any applicable fees under § 810.5.

(b) A reply denying a request shall be in writing, signed by the Administrative Officer and shall include:

(1) Reference to the specific exemption under the Act which authorizes the denial of the record, a brief explanation of how the exemption applies to the record requested, and a brief statement of why a discretionary release is not appropriate; and,

(2) A statement that the denial may be appealed under § 810.4 within 30 days by writing to the Executive Director, Advisory Council on Historic Preservation, 1522 K Street NW., Washington, DC 20005.

(c) The requirements of § 810.3 (b)(1) and (2) do not apply to requests denied on the ground that they are not described with reasonable specificity and consequently cannot be identified.

(d) Within 10 working days from receipt of a request, the Administrative Officer shall determine whether to grant or deny the request and shall promptly notify the requester of the decision. In certain unusual circumstances specified below, the time for determinations on requests may be extended up to a total of 10 additional working days. The requester shall be notified in writing of any extension and of the reason for it, as well as of the data on which a determination will be made. Unusual circumstances include:

(1) The need to search for and collect records from field offices or other establishments that are separate from the Washington office of the Council;

(2) The need to search for, collect, and examine a voluminous amount of material which is sought in a request; or,

(3) The need for consultation with another agency having substantial interest in the subject matter of the request.

If no determination has been made by the end of the 10-day period or the end of the last extension, the requester may deem his request denied and may exercise a right of appeal in accordance with § 810.4.

§ 810.4 Appeals.

(a) When a request has been denied, the requester may, within 30 days of receipt of the denial, appeal the denial to the Executive Director of the Council. Appeals to the Executive Director shall be in writing, shall be addressed to the Executive Director, Advisory Council on Historic Preservation, 1522 K Street NW., Washington, DC 20005, and shall be clearly marked ''FREEDOM OF INFORMATION APPEAL.'' Requests that are not so marked will be honored, but will be deemed not to have been received by the Council, for purposes of computing the response time, until the date on which they are identified by a member of the Council staff as being an appeal pursuant to the Freedom of Information Act.

(b) The appeal will be acted on within 20 working days of receipt. A written decision shall be issued. Where the decision upholds an initial denial of information, the decision shall include a reference to the specific exemption in the Freedom of Information Act which authorizes withholding the information, a brief explanation of how the exemption applies to the record withheld, and a brief statement of why a discretionary release is not appropriate. The decision shall also inform the requester of the right to seek judicial review in the U.S. District Court where the requester resides or has his principal place of business, or in which the agency records are situated, or in the District of Columbia.

(c) If no decision has been issued within 20 working days, the requester is deemed to have exhausted his administrative remedies.

§ 810.5 Fees.

(a) Fees shall be charged according to the schedules contained in paragraph (b) of this section unless it is determined that the requested information

will be of primary benefit to the general public rather than to the requester. In that case, fees may be waived. Fees shall not be charged where they would amount to less than $3.00.

(b) The following charges shall be assessed:

(1) Copies of documents—$0.10 per page.

(2) Clerical searches—$1.00 for each one quarter hour in excess of the first quarter hour spent by clerical personnel in searching for requested records.

(3) Professional searches—$2.00 for each one quarter hour in excess of the first quarter hour spent by professional or managerial personnel in determining which records are covered by a request or other tasks that cannot be performed by clerical personnel.

(c) Where it is anticipated that fees may amount to more than $25.00, the requester shall be advised of the anticipated amount of the fee and his consent obtained before the request is processed. The time limits for processing the request under § 810.3 shall not begin to run until the requester's written agreement to pay the fees has been received. In the discretion of the Administrative Officer, advance payment of fees may be required before requested records are made available.

(d) Payment should be made by check or money order payable to the Advisory Council on Historic Preservation.

§ 810.6 Exemptions.

(a) The Freedom of Information Act exempts from disclosure nine categories of records which are described in 5 U.S.C. 552(b).

(b) When a request encompasses records which would be of concern to or which have been created primarily by another Federal agency, the record will be made available by the Council only if the document was created primarily to meet the requirements of the Council's regulations implementing section 106 of the National Historic Preservation Act or other provisions of law administered primarily by the Council. If the record consists primarily of materials submitted by State or local governments, private individuals, organizations, or corporations, to another Federal agency in fulfillment of requirements for receiving assistance, permits, licenses, or approvals from the agency, the Council may refer the request to that agency. The requester shall be notified in writing of the referral.

PART 811—EMPLOYEE RESPONSIBILITIES AND CONDUCT

AUTHORITY: 5 U.S.C. 7301 and 16 U.S.C.470, as amended.

SOURCE: 63 FR 54355, Oct. 9, 1998, unless otherwise noted.

§ 811.1 Cross-references to employees' ethical conduct standards, financial disclosure and financial interests regulations and other conduct rules.

Employees of the Advisory Council on Historic Preservation are subject to the executive branch-wide standards of ethical conduct, financial disclosure and financial interests regulations at 5 CFR Parts 2634, 2635 and 2640, as well as the executive branch-wide employee responsibilities and conduct regulations at 5 CFR Part 735.

PART 812—ENFORCEMENT OF NONDISCRIMINATION ON THE BASIS OF HANDICAP IN PROGRAMS OR ACTIVITIES CONDUCTED BY THE ADVISORY COUNCIL ON HISTORIC PRESERVATION

Sec.

812.101 Purpose.
812.102 Application.
812.103 Definitions.
812.104–812.109 [Reserved]
812.110 Self-evaluation.
812.111 Notice.
812.112–812.129 [Reserved]
812.130 General prohibitions against discrimination.
812.131–812.139 [Reserved]
812.140 Employment.
812.141–812.148 [Reserved]
812.149 Program accessibility: Discrimination prohibited.
812.150 Program accessibility: Existing facilities.
812.151 Program accessibility: New construction and alterations.
812.152–812.159 [Reserved]
812.160 Communications.

812.161–812.169 [Reserved]
812.170 Compliance procedures.
812.171–812.999 [Reserved]

AUTHORITY: 29 U.S.C. 794.

SOURCE: 51 FR 22896, June 23, 1986, unless otherwise noted.

§ 812.101 Purpose.

This part effectuates section 119 of the Rehabilitation, Comprehensive Services, and Developmental Disabilities Amendments of 1978, which amended section 504 of the Rehabilitation Act of 1973 to prohibit discrimination on the basis of handicap in programs or activities conducted by Executive agencies or the United States Postal Service.

§ 812.102 Application.

This part applies to all programs or activities conducted by the agency.

§ 812.103 Definitions.

For purposes of this part, the term—

Assistant Attorney General means the Assistant Attorney General, Civil Rights Division, United States Department of Justice.

Auxiliary aids means services or devices that enable persons with impaired sensory, manual, or speaking skills to have an equal opportunity to participate in, and enjoy the benefits of, programs or activities conducted by the agency. For example, auxiliary aids useful for persons with impaired vision include readers, brailled materials, audio recordings, telecommunications devices and other similar services and devices. Auxiliary aids useful for persons with impaired hearing include telephone handset amplifiers, telephones compatible with hearing aids, telecommunication devices for deaf persons (TDD's), interpreters, notetakers, written materials, and other similar services and devices.

Complete complaint means a written statement that contains the complainant's name and address and describes the agency's alleged discriminatory action in sufficient detail to inform the agency of the nature and date of the alleged violation of section 504. It shall be signed by the complainant or by someone authorized to do so on his or her behalf. Complaints filed on behalf of classes or third parties shall describe or identify (by name, if possible) the alleged victims of discrimination.

Facility means all or any portion of buildings, structures, equipment, roads, walks, parking lots, rolling stock or other conveyances, or other real or personal property.

Handicapped person means any person who has a physical or mental impairment that substantially limits one or more major life activities, has a record of such an impairment, or is regarded as having such an impairment.

As used in this definition, the phrase:

(1) *Physical or mental impairment* includes—

(i) Any physiological disorder or condition, cosmetic disfigurement, or anatomical loss affecting one or more of the following body systems: Neurological; musculoskeletal; special sense organs; respiratory, including speech organs; cardiovascular; reproductive; digestive; genitourinary; hemic and lymphatic; skin; and endocrine; or

(ii) Any mental or psychological disorder, such as mental retardation, organic brain syndrome, emotional or mental illness, and specific learning disabilities. The term *physical or mental impairment* includes, but is not limited to, such diseases and conditions as orthopedic, visual, speech, and hearing impairments, cerebral palsy, epilepsy, muscular dystrophy, multiple sclerosis, cancer, heart disease, diabetes, mental retardation, emotional illness, and drug addiction and alocoholism.

(2) *Major life activities* includes functions such as caring for one's self, performing manual tasks, walking, seeing, hearing, speaking, breathing, learning, and working.

(3) *Has a record of such an impairment* means has a history of, or has been misclassified as having, a mental or physical impairment that substantially limits one or more major life activities.

(4) *Is regarded as having an impairment* means—

(i) Has a physical or mental impairment that does not substantially limit major life activities but is treated by the agency as constituting such a limitation;

(ii) Has a physical or mental impairment that substantially limits major

life activities only as a result of the attitudes of others toward such impairment; or

(iii) Has none of the impairments defined in paragraph (1) of this definition but is treated by the agency as having such an impairment.

Historic preservation programs means programs conducted by the agency that have preservation of historic properties as a primary purpose.

Historic properties means those properties that are listed or eligible for listing in the National Register of Historic Places or properties designated as historic under a statute of the appropriate State or local government body.

Qualified handicapped person means—

(1) With respect to preschool, elementary, or secondary education services provided by the agency, a handicapped person who is a member of a class of persons otherwise entitled by statute, regulation, or agency policy to receive education services from the agency.

(2) With respect to any other agency program or activity under which a person is required to perform services or to achieve a level of accomplishment, a handicapped person who meets the essential eligibility requirements and who can acheive the purpose of the program or activity without modifications in the program or activity that the agency can demonstrate would result in a fundamental alteration in its nature;

(3) With respect to any other program or activity, a handicapped person who meets the essential eligibility requirements for participation in, or receipt of benefits from, that program or activity; and

(4) *Qualified handicapped person* is defined for purposes of employment in 29 CFR 1613.702(f), which is made applicable to this part by § 812.140.

Section 504 means section 504 of the Rehabilitation Act of 1973 (Pub. L. 93–112, 87 Stat. 394 (29 U.S.C. 794)), as amended by the Rehabilitation Act Amendments of 1974 (Pub. L. 93–516, 88 Stat. 1617), and the Rehabilitation, Comprehensive Services, and Developmental Disabilities Amendments of 1978 (Pub. L. 95–602, 92 Stat. 2955). As used in this part, section 504 applies only to programs or activities conducted by Executive agencies and not to federally assisted programs.

Substantial impairment means a significant loss of the integrity of finished materials, design quality, or special character resulting from a permanent alteration.

§§ 812.104–812.109 [Reserved]

§ 812.110 Self-evaluation.

(a) The agency shall, by August 24, 1987, evaluate its current policies and practices, and the effects thereof, that do not or may not meet the requirements of this part, and, to the extent modification of any such policies and practices is required, the agency shall proceed to make the necessary modifications.

(b) The agency shall provide an opportunity to interested persons, including handicapped persons or organizations representing handicapped persons, to participate in the self-evaluation process by submitting comments (both oral and written).

(c) The agency shall, until three years following the completion of the self-evaluation, maintain on file and make available for public inspection:

(1) A description of areas examined and any problems identified, and

(2) A description of any modifications made.

§ 812.111 Notice.

The agency shall make available to employees, applicants, participants, beneficiaries, and other interested persons such information regarding the provisions of this part and its applicability to the programs or activities conducted by the agency, and make such information available to them in such manner as the head of the agency finds necessary to apprise such persons of the protections against discrimination assured them by section 504 and this regulation.

§§ 812.112–812.129 [Reserved]

§ 812.130 General prohibitions against discrimination.

(a) No qualified handicapped person shall, on the basis of handicap, be excluded from participation in, be denied

the benefits of, or otherwise be subjected to discrimination under any program or activity conducted by the agency.

(b)(1) The agency, in providing any aid, benefit, or service, may not, directly or through contractual, licensing, or other arrangements, on the basis of handicap—

(i) Deny a qualified handicapped person the opportunity to participate in or benefit from the aid, benefit, or service;

(ii) Afford a qualified handicapped person an opportunity to participate in or benefit from the aid, benefit, or service that is not equal to that afforded others;

(iii) Provide a qualified handicapped person with an aid, benefit, or service that is not as effective in affording equal opportunity to obtain the same result, to gain the same benefit, or to reach the same level of achievement as that provided to others;

(iv) Provide different or separate aid, benefits, or services to handicapped persons or to any class of handicapped persons than is provided to others unless such action is necessary to provide qualified handicapped persons with aid, benefits, or services that are as effective as those provided to others;

(v) Deny a qualified handicapped person the opportunity to participate as a member of planning or advisory boards; or

(vi) Otherwise limit a qualified handicapped person in the enjoyment of any right, privilege, advantage, or opportunity enjoyed by others receiving the aid, benefit, or service.

(2) The agency may not deny a qualified handicapped person the opportunity to participate in programs or activities that are not separate or different, despite the existence of permissibly separate or different programs or activities.

(3) The agency may not, directly or through contractual or other arrangments, utilize criteria or methods of administration the purpose or effect of which would—

(i) Subject qualified handicapped persons to discrimination on the basis of handicap; or

(ii) Defeat or substantially impair accomplishment of the objectives of a program or activity with respect to handicapped persons.

(4) The agency may not, in determining the site or location of a facility, make selections the purpose or effect of which would—

(i) Exclude handicapped persons from, deny them the benefits of, or otherwise subject them to discrimination under any program or activity conducted by the agency; or

(ii) Defeat or substantially impair the accomplishment of the objectives of a program or activity with respect to handicapped persons.

(5) The agency, in the selection of procurement contractors, may not use criteria that subject qualified handicapped persons to discrimination on the basis of handicap.

(6) The agency may not administer a licensing or certification program in a manner that subjects qualified handicapped persons to discrimination on the basis of handicap, nor may the agency establish requirements for the programs or activites of licensees or certified entities that subject qualified handicapped persons to discrimination on the basis of handicap. However, the programs or activities of entities that are licensed or certified by the agency are not, themselves, covered by this part.

(c) The exclusion of nonhandicapped persons from the benefits of a program limited by Federal statute or Executive order to handicapped persons or the exclusion of a specific class of handicapped persons from a program limited by Federal statute or Executive order to a different class of handicapped persons is not prohibited by this part.

(d) The agency shall administer programs and activities in the most integrated setting appropriate to the needs of qualified handicapped persons.

§§ 812.131–812.139 [Reserved]

§ 812.140 Employment.

No qualified handicapped person shall, on the basis of handicap, be subjected to discrimination in employment under any program or activity conducted by the agency. The definitions, requirements, and procedures of section 501 of the Rehabilitation Act of

1973 (29 U.S.C. 791), as established by the Equal Employment Opportunity Commission in 29 CFR part 1613, shall apply to employment in federally conducted programs or activities.

§§812.141–812.148 [Reserved]

§812.149 Program accessibility: Discrimination prohibited.

Except as otherwise provided in §812.150, no qualified handicapped person shall, because the agency's facilities are inaccessible to or unusable by handicapped persons, be denied the benefits of, be excluded from participation in, or otherwise be subjected to discrimination under any program or activity conducted by the agency.

§812.150 Program accessibility: Existing facilities.

(a) *General.* The agency shall operate each program or activity so that the program or activity, when viewed in its entirety, is readily accessible to and usable by handicapped persons. This paragraph does not—

(1) Necessarily require the agency to make each of its existing facilities accessible to and usable by handicapped persons;

(2) In the case of historic preservation programs, require the agency to take any action that would result in a substantial impairment of significant historic features of an historic property; or

(3) Require the agency to take any action that it can demonstrate would result in a fundamental alteration in the nature of a program or activity or in undue financial and administrative burdens. In those circumstances where agency personnel believe that the proposed action would fundamentally alter the program or activity or would result in undue financial and administrative burdens, the agency has the burden of proving that compliance with §812.150(a) would result in such alteration or burdens. The decision that compliance would result in such alteration or burdens must be made by the agency head or his or her designee after considering all agency resources available for use in the funding and operation of the conducted program or activity, and must be accompanied by a written statement of the reasons for reaching that conclusion. If an action would result in such an alteration or such burdens, the agency shall take any other action that would not result in such an alteration or such burdens but would nevertheless ensure that handicapped persons receive the benefits and services of the program or activity.

(b) *Methods*—(1) *General.* The agency may comply with the requirements of this section through such means as redesign of equipment, reassignment of services to accessible buildings, assignment of aides to beneficiaries, home visits, delivery of services at alternate accessible sites, alteration of existing facilities and construction of new facilities, use of accessible rolling stock, or any other methods that result in making its programs or activities readily accessible to and usable by handicapped persons. The agency is not required to make structural changes in existing facilities where other methods are effective in achieving compliance with this section. The agency, in making alterations to existing buildings, shall meet accessibility requirements to the extent compelled by the Architectural Barriers Act of 1968, as amended (42 U.S.C. 4151–4157), and any regulations implementing it. In choosing among available methods for meeting the requirements of this section, the agency shall give priority to those methods that offer programs and activities to qualified handicapped persons in the most integrated setting appropriate.

(2) *Historic preservation programs.* In meeting the requirements of §812.150(a) in historic preservation programs, the agency shall give priority to methods that provide physical access to handicapped persons. In cases where a physical alteration to an historic property is not required because of §812.150(a)(2) or (a)(3), alternative methods of achieving program accessibility include—

(i) Using audio-visual materials and devices to depict those portions of an historic property that cannot otherwise be made accessible;

(ii) Assigning persons to guide handicapped persons into or through portions of historic properties that cannot otherwise be made accessible; or

(iii) Adopting other innovative methods.

(c) *Time period for compliance.* The agency shall comply with the obligations established under this section by October 21, 1986, except that where structural changes in facilities are undertaken, such changes shall be made by August 22, 1989, but in any event as expeditiously as possible.

(d) *Transition plan.* In the event that structural changes to facilities will be undertaken to achieve program accessibility, the agency shall develop, by February 23, 1987, a transition plan setting forth the steps necessary to complete such changes. The agency shall provide an opportunity to interested persons, including handicapped persons or organizations representing handicapped persons, to participate in the development of the transition plan by submitting comments (both oral and written). A copy of the transition plan shall be made available for public inspection. The plan shall, at a minimum—

(1) Identify physical obstacles in the agency's facilities that limit the accessibility of its programs or activities to handicapped persons;

(2) Describe in detail the methods that will be used to make the facilities accessible;

(3) Specify the schedule for taking the steps necessary to achieve compliance with this section and, if the time period of the transition plan is longer than one year, identify steps that will be taken during each year of the transition period; and

(4) Indicate the official responsible for implementation of the plan.

§ 812.151 Program accessibility: New construction and alterations.

Each building or part of a building that is constructed or altered by, on behalf of, or for the use of the agency shall be designed, constructed, or altered so as to be readily accessible to and usable by handicapped persons. The definitions, requirements, and standards of the Architectural Barriers Act (42 U.S.C. 4151–4157), as established in 41 CFR 101–19.600 to 101–19.607, apply to buildings covered by this section.

§§ 812.152–812.159 [Reserved]

§ 812.160 Communications.

(a) The agency shall take appropriate steps to ensure effective communication with applicants, participants, personnel of other Federal entities, and members of the public.

(1) The agency shall furnish appropriate auxiliary aids where necessary to afford a handicapped person an equal opportunity to participate in, and enjoy the benefits of, a program or activity conducted by the agency.

(i) In determining what type of auxiliary aid is necessary, the agency shall give primary consideration to the requests of the handicapped person.

(ii) The agency need not provide individually prescribed devices, readers for personal use or study, or other devices of a personal nature.

(2) Where the agency communicates with applicants and beneficiaries by telephone, telecommunication devices for deaf person (TDD's) or equally effective telecommunication systems shall be used.

(b) The agency shall ensure that interested persons, including persons with impaired vision or hearing, can obtain information as to the existence and location of accessible services, activities, and facilities.

(c) The agency shall provide signage at a primary entrance to each of its inaccessible facilities, directing users to a location at which they can obtain information about accessible facilities. The international symbol for accessibility shall be used at each primary entrance of an accessible facility.

(d) This section does not require the agency to take any action that it can demonstrate would result in a fundamental alteration in the nature of a program or activity or in undue financial and adminstrative burdens. In those circumstances where agency personnel believe that the proposed action would fundamentally alter the program or activity or would result in undue financial and administrative burdens, the agency has the burden of proving that compliance with § 812.160 would result in such alteration or burdens. The

decision that compliance would result in such alteration or burdens must be made by the agency head or his or her designee after considering all agency resources available for use in the funding and operation of the conducted program or activity, and must be accompanied by a written statement of the reasons for reaching that conclusion. If an action required to comply with this section would result in such an alteration or such burdens, the agency shall take any other action that would not result in such an alteration or such burdens but would nevertheless ensure that, to the maximum extent possible, handicapped persons receive the benefits and services of the program or activity.

§§ 812.161–812.169 [Reserved]

§ 812.170 Compliance procedures.

(a) Except as provided in paragraph (b) of this section, this section applies to all allegations of discrimination on the basis of handicap in programs or activities conducted by the agency.

(b) The agency shall process complaints alleging violations of section 504 with respect to employment according to the procedures established by the Equal Employment Opportunity Commission in 29 CFR part 1613 pursuant to section 501 of the Rehabilitation Act of 1973 (29 U.S.C. 791).

(c) The General Counsel shall be responsible for coordinating implementation of this section. Complaints may be sent to the General Counsel, Advisory Council on Historic Preservation, 1100 Pennsylvania Avenue, NW., Washington, DC 20004.

(d) The agency shall accept and investigate all complete complaints for which it has jurisdiction. All complete complaints must be filed within 180 days of the alleged act of discrimination. The agency may extend this time period for good cause.

(e) If the agency receives a complaint over which it does not have jurisdiction, it shall promptly notify the complainant and shall make reasonable efforts to refer the complaint to the appropriate government entity.

(f) The agency shall notify the Architectural and Transportation Barriers Compliance Board upon receipt of any complaint alleging that a building or facility that is subject to the Architectural Barriers Act of 1968, as amended (42 U.S.C. 4151–4157), or section 502 of the Rehabilitation Act of 1973, as amended (29 U.S.C. 792), is not readily accessible to and usable by handicapped persons.

(g) Within 180 days of the receipt of a complete complaint for which it has jurisdiction, the agency shall notify the complainant of the results of the investigation in a letter containing—

(1) Findings of fact and conclusions of law;

(2) A description of a remedy for each violation found; and

(3) A notice of the right to appeal.

(h) Appeals of the findings of fact and conclusions of law or remedies must be filed by the complainant within 90 days of receipt from the agency of the letter required by § 812.170(g). The agency may extend this time for good cause.

(i) Timely appeals shall be accepted and processed by the head of the agency.

(j) The head of the agency shall notify the complainant of the results of the appeal within 60 days of the receipt of the request. If the head of the agency determines that additional information is needed from the complainant, he or she shall have 60 days from the date of receipt of the additional information to make his or her determination on the appeal.

(k) The time limits cited in paragraphs (g) and (j) of this section may be extended with the permission of the Assistant Attorney General.

(l) The agency may delegate its authority for conducting complaint investigations to other Federal agencies, except that the authority for making the final determination may not be delegated to another agency.

[51 FR 22896, June 23, 1986, as amended at 51 FR 22893, June 23, 1986]

§§ 812.171–812.999 [Reserved]

PARTS 813–899 [RESERVED]

CHAPTER IX—PENNSYLVANIA AVENUE DEVELOPMENT CORPORATION

Part		*Page*
900	[Reserved]	
901	Bylaws of the Corporation	137
902	Freedom of Information Act	140
903	Privacy Act	154
904	Uniform relocation assistance and real property acquisition for Federal and federally assisted programs	160
905	Standards of conduct	160
906	Affirmative action policy and procedure	168
907	Environmental quality	174
908	Policy and procedures to facilitate the retention of displaced businesses and residents in the Pennsylvania Avenue Development Area	180
909	Enforcement of nondiscrimination on the basis of handicap in programs or activities conducted by the Pennsylvania Avenue Development Corporation	185
910	General guidelines and uniform standards for urban planning and design of development within the Pennsylvania Avenue Development Area	191
911–999	[Reserved]	

NOTE: Public Law 104–99, which incorporated the terms of the Department of the Interior and Related Agencies Appropriations Act, 1996 (H.R. 1977), as passed by the House of Representatives on December 13, 1995, provides that the Pennsylvania Avenue Development Corporation terminates as of April 1, 1996. H.R. 1977 provides that ''any regulations prescribed by the [Pennsylvania Avenue Development] Corporation in connection with the Pennsylvania Avenue Development Corporation Act of 1972 (40 U.S.C. 871–885) and the Federal Triangle Development Act (40 U.S.C. 1101–1109) shall continue in effect until suspended by regulations prescribed by the Administrator of the General Services Administration.'' Accordingly, the authority to administer the regulations in 36 CFR Chapter IX is transferred to the General Services Administration. See the Pennsylvania Avenue Development Corporation document, ''Transfer of Responsibilities and Effectiveness of PADC Regulations After PADC Termination'', published at 61 FR 11308, March 20, 1996.

PART 900 [RESERVED]

PART 901—BYLAWS OF THE CORPORATION

Sec.
901.1 Title and office.
901.2 Establishment.
901.3 Board of directors.
901.4 Officers.
901.5 Annual report.
901.6 Seal.
901.7 Amendments.

AUTHORITY: Sec. 6(5), Pub. L. 92–578, 88 Stat. 1270(5) (40 U.S.C. 875(5)).

SOURCE: 40 FR 41524, Sept. 8, 1975, unless otherwise noted.

§ 901.1 Title and office.

(a) *Title*. The name of the Corporation is the Pennsylvania Avenue Development Corporation.

(b) *Office*. The office of the Corporation shall be in the city of Washington, District of Columbia.

§ 901.2 Establishment.

(a) *Creation*. The Corporation, a wholly owned instrumentality of the United States subject to the Government Corporation Control Act (31 U.S.C. 841 *et seq.*), was established by the Pennsylvania Avenue Development Corporation Act of 1972 (Pub. L. 92–578, 86 Stat. 1266 (40 U.S.C. 871 *et seq.*)), as amended, hereinafter referred to as *the Act*.

(b) *Purposes*. The purposes for which this Corporation was established are those stated and promulgated by Congress in the Act.

§ 901.3 Board of directors.

(a) *Powers and responsibilities*. The business, property and affairs of the Corporation shall be managed and controlled by the Board of Directors, and all powers specified in the Act are vested in them. The Board may, at its discretion and as hereinafter provided, delegate authority necessary to carry on the ordinary operations of the Corporation to officers and staff of the Corporation.

(b) *Composition; number; selection; terms of office*. The Board of Directors shall be comprised of fifteen voting members and eight nonvoting members. The powers and management of the Corporation shall reside with the fifteen voting members, and the procedures of the Board shall be determined by them.

(1) The fifteen voting members shall include the seven government agency representatives specified in subsection 3(c) of the Act (or, their designees), and eight individuals meeting the qualifications of that subsection, appointed by the President of the United States from private life, at least four of whom shall be residents and registered voters of the District of Columbia.

(2) The Chairman and Vice Chairman shall be designated by the President of the United States from among those members appointed from private life.

(3) Upon his appointment, the Chairman shall invite the eight representatives designated in subsection 3(g) of the Act to serve as non-voting members of the Board of Directors.

(4) Each member of the Board of Directors appointed from private life shall serve a term of six years from the expiration of his predecessor's term; except that the terms of the Directors first taking office shall begin on October 27, 1972 and shall expire as designated at the time of appointment. A Director may continue to serve until his successor has qualified.

(5) A Director appointed from private life wishing to resign shall submit a letter of resignation to the President of the United States, and his resignation shall become effective upon the date of the President's acceptance thereof.

(6) A Director, appointed to fill a vacancy occurring prior to the expiration of the term for which his predecessor was appointed, shall serve for the remainder of such term.

(c) *Meetings*. (1) The Board of Directors shall meet and keep its records at the office of the Corporation.

(2) Meetings of the Board of Directors shall be held at the call of the Chairman, but not less often than once every three months. The Chairman shall also call a meeting at the written request of any five voting members.

(3) The Chairman shall direct the Secretary to give the members of the Board notice of each meeting, either personally, or by mail, or by telegram, stating the time, the place and the

agenda for the meeting. Notice by telephone shall be personal notice. Any Director may waive, in writing, notice as to himself, whether before or after the time of the meeting, and the presence of a Director at any meeting shall constitute a waiver of notice of that meeting. Notice, in whatever form, shall be given so that a Director will have received it five working days prior to the time of the meeting.

(4) Unless otherwise limited by the notice thereof, any and all Corporation business may be transacted at any meeting.

(5) The Chairman shall preside at meetings of the Board of Directors, or the Vice Chairman in the absence of the Chairman. In the event of the absence of both the Chairman and the Vice Chairman, the Directors present at the meeting shall designate a Presiding Officer.

(d) *Quorum.* The presence of a majority of the number of voting Directors serving at the time of a meeting of the Board shall constitute a quorum for the transaction of business at such meeting of the Board. The act of a majority of the voting Directors at any meeting at which there is a quorum shall be an act of the Board of Directors. If there shall be less than a quorum at any meeting, a majority of the voting Directors present may adjourn the meeting until such time as a quorum can practically and reasonably be obtained.

(e) *Directors serving in stead.* Each member of the Board of Directors specified in paragraphs (1) through (7) of subsection 3(c) of the Act, if unable to serve in person, may designate up to two officials from his agency or department to serve on the Board in his stead. Such designation shall be effected by a letter of appointment, from the Director specified in the Act, received by the Chairman prior to or at a meeting of the Board of Directors. If two officials are so designated, then the Director specified in the Act shall identify one as the First Designee and the other as the Second Designee. The Second Designee may only serve as a Director if the First Designee is not in attendance at a meeting of the Board of Directors. An official designated to serve in stead shall serve as the voting Director of the represented agency until the Chairman receives written notice from the Director specified in the Act, or his successor, that the designation is rescinded.

(f) *Vote by proxy.* Voting members of the Board of Directors unable to attend a meeting may vote by proxy on resolutions which have been printed in the agenda in advance for the meeting.

(1) A Director unable to attend a meeting of the Board may submit a vote to be cast by the Presiding Officer by means of a written signed statement of his vote and the resolution to which it pertains together with any statement bearing on the matter the Director wishes to have read. The proxy vote shall be submitted to the Chairman with a separate signed copy to the Secretary, to be received not later than the close of business of the day prior to the date fixed for the meeting.

(2) The Presiding Officer shall cast proxy votes received by the Chairman in the following manner:

(i) Upon the close of discussion on a resolution for which there has been submitted one or more valid proxy votes, the Presiding Officer shall announce that he holds proxy vote(s) from named Director(s), and shall read any explanatory statements submitted by the Director(s) voting by proxy;

(ii) The Presiding Officer shall take the vote of the Directors present and then declare the proxy votes in hand;

(iii) The Secretary shall orally verify the validity of the votes submitted to be cast by proxy, and shall record them with the votes cast by the Directors present on the resolution.

(3) Proxy votes shall not be utilized to effect the presence of a quorum.

(g) *Compensation of Directors.* Members of the Board of Directors shall be compensated in the manner provided in section 3 of the Act.

(h) *Approval of annual budget.* Upon completion by the staff of a draft annual budget request, the Chairman shall call a meeting of the Board of Directors for its review and consideration. Upon approval by the Board of the draft budget request, it may be submitted to the Office of Management and Budget.

[40 FR 41524, Sept. 8, 1975, as amended at 48 FR 20903, May 10, 1983]

§901.4 Officers.

(a) *General provisions.* The corporate officers of the Corporation shall consist of a President, an Executive Director, two Assistant Directors, a Secretary (who shall be appointed by the Chairman from among the staff of the Corporation), and such other officers as the Board of Directors may from time-to-time appoint. Any corporate officer elected or appointed by the Board of Directors may be removed at any time, with or without cause, by the affirmative vote of a majority of the Board of Directors.

(b)(1) *Powers and duties of the President.* The Chairman of the Board of Directors shall be the President and chief executive officer of the Corporation and shall have the general powers and duties of supervision and management usually vested in the office of a president of a corporation. The President shall see that all resolutions and policies of the Board are carried into effect, and shall have power to execute contracts, leases, agreements, and other documents necessary for the operation of the Corporation.

(2) *Assumption of powers and duties by Vice Chairman.* In the event that the position of Chairman becomes vacant, the Vice Chairman shall promptly notify the President of the United States in writing to that effect and upon giving such notice, shall assume the Chairman's powers and duties as President and Chief Executive Officer of the Corporation, including specific powers and duties delegated to the Chairman by the Board of Directors. Such assumption of the Chairman's powers and duties shall cease upon the appointment or designation of a new Chairman or Acting Chairman by the President of the United States. The Vice Chairman shall also assume the powers and duties of the Chairman in the event of the latter's incapacity, if the Chairman so requests in writing, or if a majority of the voting members of the Board of Directors finds by resolution that the Chairman is unable to exercise the powers and duties of his office. Such assumption of the Chairman's powers and duties shall cease upon the Vice Chairman's receipt of a letter from the Chairman stating that he or she is able to resume the exercise of the powers and duties of his office.

(c) *Appointment of certain officers.* The Board of Directors shall appoint an Executive Director and two Assistant Directors, who may be appointed and compensated without regard to the provisions of title 5 U.S.C. governing appointments in the competitive service and chapter 51 and subchapter IV of chapter 53 of title 5 U.S.C. Between meetings of the Board of Directors the Chairman may make appointments to the foregoing positions, when they become vacant by resignation or otherwise. However, the Chairman shall move to have such interim appointments confirmed at the next meeting of the Board. The Chairman shall have power to increase or decrease the salaries of the officers appointed under this section.

(d) *Powers and duties of the Executive Director.* The Executive Director shall be the chief of the Corporation's staff and shall have general powers of supervision and management over the administration of the Corporation. The Executive Director shall have power to:

(1) Execute contracts, agreements, and other documents necessary for planning and design work and for ordinary operations of the Corporation.

(2) Hire staff (including temporary or intermittent experts and consultants).

(3) Procure space, equipment, supplies, and obtain interagency and commercial support services.

(4) Direct and manage the day-to-day operations and work of the Corporation.

(5) Supervise planning and development activities of the Corporation in accordance with the development plan and resolutions of the Board of Directors.

(6) Perform such other duties and exercise such powers as the President and Board of Directors may prescribe.

(e) *Powers and duties of the Assistant Director/Legal.* The Assistant Director/Legal shall be the General Counsel of the Corporation, advising the Board of Directors and the staff on all legal matters affecting the functioning of the Corporation. He shall:

(1) Coordinate with the Department of Justice in assuring that the interests of the Corporation are represented

in any litigation arising from its authorities or actions.

(2) Advise the Board of Directors and the staff of statutory or regulatory requirements, and assure compliance therewith.

(3) Prepare or review all contracts, agreements or other documents of a legal nature.

(4) Prepare or review all draft legislation, regulations, official notices and other legal publications.

(5) Perform such other duties as may be prescribed by the Board of Directors, the President, or the Executive Director.

(f) *Powers and duties of the Assistant Director/Development*. The Assistant Director/Development shall advise the Board of Directors, officers and staff of the Corporation on all development activities to accomplish the goals of the development plan. He shall:

(1) Manage development activities in accordance with the development plan.

(2) Function as a key management official performing a wide range of duties required to accomplish the rebuilding of Pennsylvania Avenue.

(3) Provide managerial responsibility for the work of all project managers and consultants relating to development projects.

(4) Coordinate the tasks of other staff professionals as required for accomplishment of projects.

(5) Be liaison between the Corporation and other governmental agencies that review projects in the development area.

(6) Perform such other duties as may be prescribed by the Board of Directors, the President, or the Executive Director.

(g) *Powers and Duties of the Secretary*. The Secretary, to be appointed by the Chairman from among the Corporation's staff, shall give notice of all meetings of the Board of Directors and record and keep the minutes thereof, keep in safe custody the seal of the Corporation, and shall affix the same to any instrument requiring it. When so affixed, the seal shall be attested by the signature of the Secretary. The Secretary shall also perform such other duties as may be prescribed by the Board of Directors, the President, or the Executive Director.

[40 FR 41524, Sept. 8, 1975, as amended at 47 FR 34536, Aug. 10, 1982]

§ 901.5 Annual report.

The Executive Director shall prepare annually a comprehensive and detailed report of the Corporation's operations, activities, and accomplishments for the review of the Board of Directors. Upon approval by the Board, the Chairman shall transmit the report in January of each year to the President of the United States and to the Congress.

§ 901.6 Seal.

The Corporation may adopt a corporate seal which shall have the name of the Corporation and year of incorporation printed upon it. The seal may be used by causing it or a facsimile thereof to be impressed, affixed, or reproduced.

§ 901.7 Amendments.

These bylaws may be altered, amended, or repealed by the Board of Directors at any meeting, if notice of the proposed alteration, amendment, or repeal is contained in the notice of the meeting.

PART 902—FREEDOM OF INFORMATION ACT

Subpart A—Applicability and Policy

Sec.
902.01 Purpose and applicability.
902.02 Statement of policy.
902.03 Definitions.

Subpart B—General Administration

902.10 Delegation of administration of this part.
902.11 How records may be requested.
902.12 Maintenance of statistics; annual report to Congress.
902.13 Indexes of Corporation records.
902.14 Deletion of nondiscloseable information from requested records.
902.15 Protection of records.

Subpart C—Publication in the Federal Register

902.20 Applicability.
902.21 Publication in the Federal Register shall be constructive notice of information that affects the public.

Subpart D—Availability of Records Not Published in the Federal Register

902.30 Applicability.
902.31 Access, inspection and copying.

Subpart E—Availability of Reasonably Described Records

902.40 Applicability.
902.41 Public access to reasonably described records.
902.42 Request for records of concern to more than one government organization.

Subpart F—Exemptions From Public Access to Corporation Records

902.50 Applicability.
902.51 Records relating to matters that are required by Executive order to be kept secret.
902.52 Records related solely to internal personnel rules and practices.
902.53 Records exempted from disclosure by statute.
902.54 Trade secrets and commercial or financial information that is privileged or confidential.
902.55 Intragovernmental exchanges.
902.56 Protection of personal privacy.
902.57 Investigatory files compiled for law enforcement purposes.
902.58 Reports of financial institutions.
902.59 Geological and geophysical information.

Subpart G—Time Limitations

902.60 Initial determination.
902.61 Final determination.
902.62 Extension of time limits.

Subpart H—Procedures for Administrative Appeal of Decisions Not To Disclose Records

902.70 General.
902.71 Forms for appeal.
902.72 Time limitations on filing an appeal.
902.73 Where to appeal.
902.74 Agency decision.

Subpart I—Fees

902.80 General.
902.81 Payment of fees.
902.82 Fee schedule.
902.83 Waiver or reduction of fees.

AUTHORITY: 5 U.S.C. 552; 52 FR 10012–10019 (March 27, 1987); E.O. 12600, 52 FR 23781 (June 23, 1987).

SOURCE: 41 FR 43143, Sept. 30, 1976, unless otherwise noted.

Subpart A—Applicability and Policy

§ 902.01 Purpose and applicability.

This part contains regulations of the Corporation implementing 5 U.S.C. 552, as amended. It informs the public about where and how the Corporation's records may be obtained. The following provisions are applicable to all records of the Corporation in existence at the time a request for records is made. The regulations establish fee schedules applicable to the search and copying of requested records. This part identifies the officials having authority to act on requests and prescribes the procedures to appeal decisions which initially deny disclosure. Indexes maintained to reflect all records subject to this part are available for public inspection and copying as provided herein.

§ 902.02 Statement of policy.

In keeping with the spirit of the Freedom of Information Act, 5 U.S.C. 552, the policy of the Corporation is one of full and responsible disclosure of its records to the public. Therefore, all records of the Corporation, unless otherwise exempted under subpart F of this part, are declared to be available for public inspection and copying. Each officer and employee of the Corporation is directed to cooperate to this end and shall make records available to the public with reasonable promptness. A record may not be withheld from the public solely because its release might suggest administrative error or embarrass an officer or employee of the Corporation.

§ 902.03 Definitions.

As used in this part—

(a) *Act* means section 552 of title 5 U.S.C., as amended, Pub. L. 90–23, 81 Stat. 54, June 5, 1967; as amended, Pub. L. 93–502, 88 Stat. 1561, November 11, 1974. Pub. L. 90–23 repealed and superseded Pub. L. 89–487, 80 Stat. 250. July 4, 1966, sometimes referred to as the *Freedom of Information Act* or *Public Information Act*.

(b) *Chairman* means the Chairman of the Corporation's Board of Directors and President of the Corporation.

(c) *Corporation* means the Pennsylvania Avenue Development Corporation, including the Board of Directors, Executive Officers, Corporation staff, and any subordinate organizational units operating under the Pennsylvania Avenue Development Corporation Act of 1972, Pub. L. 92–578, 86 Stat. 1266 (40 U.S.C. 871 *et seq.*), as amended.

(d) *Person* means *person* as defined in 5 U.S.C. 551(2).

(e) *Records* means any and all writing, drawings, maps, recordings, tapes, films, slides, photographs, or other documentary materials by which information is preserved.

(f) *Submitter* means any person or entity that provides or has provided information to the Corporation or about which the Corporation possess records subject to Exemption 4 of the Freedom of Information Act.

(g) *Workday* means a calendar day excluding Saturday, Sunday and Federal holidays, office hours being 9 a.m. to 5 p.m.

[41 FR 43143, Sept. 30, 1976, as amended at 53 FR 10374, Mar. 31, 1988]

Subpart B—General Administration

§ 902.10 Delegation of administration of this part.

Except as provided in subpart H of this part, authority to administer this part is delegated to the Administrative Officer, who shall act upon all requests for access to records which are received by the Corporation from any person citing the Act.

[41 FR 43143, Sept. 30, 1976, as amended at 48 FR 17354, Apr. 22, 1983]

§ 902.11 How records may be requested.

In accordance with § 902.41 of subpart E of this part all requests for records shall be made to the Administrative Officer, Pennsylvania Avenue Development Corporation, 1331 Pennsylvania Avenue, NW, Suite 1220 North, Washington, DC 20004.

[41 FR 43143, Sept. 30, 1976, as amended at 48 FR 17354, Apr. 22, 1983; 50 FR 45824, Nov. 4, 1985]

§ 902.12 Maintenance of statistics; annual report to Congress.

(a) The Administrative Officer shall maintain records of:

(1) The fees collected by the Corporation for making records available under this part;

(2) The number of denials of requests for records made under this part, and the reasons for each denial;

(3) The number of appeals arising from denials, the result of each appeal, and the reasons for the action upon each appeal that results in a denial of information;

(4) The names and titles or positions of each person responsible for each denial of records requested under this part, and the number of instances of participation for each person;

(5) The results of each proceeding conducted pursuant to subsection 552(a)(4)(f) of title 5, U.S.C., including a report of the disciplinary action against the official or employee who was primarily responsible for improperly withholding records or an explanation of why disciplinary action was not taken;

(6) Every rule made by the Corporation affecting or implementing the Act;

(7) The fee schedule listing fees for search and duplication of records pursuant to request under the Act; and

(8) All other information which indicates efforts to administer fully the letter and spirit of the Act.

(b) The Administrative Officer shall annually prepare a report accounting for each item in paragraph (a) of this section for the prior calendar year. On or before March 1st of each year, the report shall be submitted to the Speaker of the House of Representatives and the President of the Senate for referral to the appropriate committees of Congress.

[41 FR 43143, Sept. 30, 1976, as amended at 48 FR 17354, Apr. 22, 1983]

§ 902.13 Indexes of Corporation records.

(a) The Administrative Officer shall be responsible for maintenance, publication, distribution and availability for inspection and copying of the current indexes and supplements which are required by 5 U.S.C. (a)(2). Such indexes

shall be published promptly on a quarterly basis unless the Chairman determines by order published in the FEDERAL REGISTER that the pubication would be unnecessary and impractical.

(b) The index of materials under this subpart covers all materials issued, adopted, or promulgated after July 4, 1967 by the Corporation. However, earlier materials may be included in the index to the extent practicable. Each index contains instruction for its use.

[41 FR 43143, Sept. 30, 1976, as amended at 48 FR 17354, Apr. 22, 1983]

§ 902.14 Deletion of nondiscloseable information from requested records.

Whenever a requested record contains information which falls within one of the exempted categories of subpart F of this part, identifying details shall be deleted from the record before it is made available for public inspection and copying. When a requested record contains both discloseable and nondiscloseable information, only that portion which is reasonably segregable after deletion of the nondiscloseable portions, will be released. If the information in the discloseable portion is readily available from another source and that source is made known to the person making the request, the Corporation need not disclose the requested record. In all cases where a deletion is made, an explanation of the deletion shall be attached to the record made available for inspection, distribution, or copying. Appeal of deletions shall be made in accordance with subpart H of this part.

§ 902.15 Protection of records.

(a) No person may, without permission of the Administrative Officer, remove from the Corporation's offices any record made available to him for inspection or copying. In addition, no person may steal, alter, multilate, obliterate, or destroy, in whole or in part, such a record.

(b) Section 641 of title 18 U.S.C. provides, in pertinent part, as follows:

(1) Whoever * * * steals, purloins, knowingly converts to his use or the use of any other or without authority sells, conveys or disposes of any record * * * or thing of value shall be fined not more than $10,000 or imprisoned not more than 10 years or both; but if the value of such property does not exceed the sum of $100, he shall be fined not more than $1,000 or imprisoned not more than one year or both. * * *

(c) Section 2071 of title 18 U.S.C. provides, in pertinent part, as follows:

(1) Whoever willfully and unlawfully conceals, removes, multilates, obliterates, or destroys, or attempts to do so, or with intent to do so takes and carries away any record, proceeding, map, book, paper document, or other thing, filed or deposited * * * in any public office, or with any * * * public officer of the United States, shall be fined not more than $2,000 or imprisoned not more than 3 years, or both.

[41 FR 43143, Sept. 30, 1976, as amended at 48 FR 17354, Apr. 22, 1983]

Subpart C—Publication in the Federal Register

§ 902.20 Applicability.

Subject to the exemptions in subpart F of this part, the Corporation, for the guidance of the public, shall submit to the Director of the Federal Register for publication—

(a) Descriptions of the Corporation's organization and functional responsibilities and the designation of places at which the public may secure information, obtain forms and applications, make submittals or requests, or obtain decisions:

(b) Statements of the general course and method by which the Corporation's functions are channeled and determined, including the nature and requirements of all formal and informal procedures available;

(c) Rules of procedure, descriptions of forms available, and instructions as to the scope and contents of all papers, reports, or examinations;

(d) Substantive rules of general applicability adopted as authorized by law, and statements of general policy or interpretations of general applicability; and,

(e) Each amendment, revision, or repeal of the foregoing.

§ 902.21 Publication in the Federal Register shall be constructive notice of information that affects the public.

(a) All material described in § 902.20 shall be published in the FEDERAL REGISTER. For the purpose of this section, material that is reasonably available to the class of persons affected by it is considered to be published in the FEDERAL REGISTER when it is incorporated by reference with the approval of the Director of the Federal Register.

(b) Publication in the FEDERAL REGISTER of all relevant information shall be considered constructive notice of information that affects the public, except that no person shall be required to resort to or be adversely affected by any matter which is required to be published in the FEDERAL REGISTER and is not so published unless such person has actual and timely notice of the terms of the unpublished matter.

Subpart D—Availability of Records Not Published in the Federal Register

§ 902.30 Applicability.

(a) This subpart implements section 552(a)(2) of title 5 U.S.C., as amended by 88 Stat. 1561 (1974). It prescribes the rules governing the availability for public inspection and copying of the following:

(1) Final opinions or orders (including concurring and dissenting opinions, if any) made in the adjudication of cases;

(2) Statements of policy or interpretations which have been adopted under the authority of the Corporation's enabling act, including statements of policy or interpretation concerning a particular factual situation. If they can reasonably be expected to have precedential value in any case involving a member of the public in a similar situation, and have not been published in the FEDERAL REGISTER.

(3) Administrative staff manuals or instructions to the staff of the Corporation which affects any member of the public. Included within this category are manuals or instructions which prescribe the manner or performance of any activity by any person. Excepted from this category are staff manuals or instructions to staff concerning internal operating rules, practices, guidelines and procedures for Corporation negotiators and inspectors, the release of which would substantially impair the effective performance of their duties.

(4) Documents and materials offered for sale under the auspices of the Corporation.

(5) Any index of materials which is required to be maintained by the Corporation under § 902.13.

(b) Records listed in paragraph (a) of this section, which the Corporation does not make available for public inspection and copying, or that are not indexed as required by § 902.13, may not be cited, relied upon, or used as a precedent by the Corporation to adversely affect any person, unless the person against whom it is cited, relied upon, or used, has had actual and timely notice of that material.

(c) This subpart shall not apply to information published in the FEDERAL REGISTER or that is a reasonably described record covered by subpart E of this part.

§ 902.31 Access, inspection and copying.

(a) Records listed in § 902.30(a), are available for inspection and copying by any person at the Corporation's office, 1331 Pennsylvania Avenue, NW., Suite 1220 North, Washington, DC 20004. Facilities for inspection and copying shall be open to the public every workday.

(b) Records listed in § 902.30(a), that are published and offered for sale, shall be indexed as required under § 902.13, and shall be available for public inspection. Records offered for sale will not be copied by the Corporation for the requester without the approval of the Administrative Officer.

(c) Records listed in § 902.30(a) are subject to subpart F of this part and access may be restricted by the Corporation in accordance with that subpart. A refusal to disclose may be appealed by the requester under the provisions of subpart H of this part.

[41 FR 43143, Sept. 30, 1976, as amended at 48 FR 17354, Apr. 22, 1983; 50 FR 45824, Nov. 4, 1985]

Subpart E—Availability of Reasonably Described Records

§ 902.40 Applicability.

This subpart implements section 552(a)(3) of title 5 U.S.C., as amended, and prescribes regulations governing public inspection and copying of reasonably described records in the Corporation's custody. This subpart shall not apply to material which is covered by subparts C and D of this part, and records exempted under subpart F of this part.

§ 902.41 Public access to reasonably described records.

(a) Any person desiring access to a record covered by this subpart may make request for records and copies either in person on any workday at the Corporation's office, or by written request. In either instance, the requester must comply with the following provisions;

(1) A written request must be made for the record;

(2) The request must indicate that it is being made under the Freedom of Information Act (section 552 of title 5 U.S.C.); and

(3) The request must be addressed to the attention of the Administrative Officer, as provided in § 902.11.

(b) Each request for a record should reasonably describe the particular record sought. The request should specify, to the extent possible, the subject matter of the record, the date when it was made, the place where it was made and the person who made it. If the description is insufficient to process the request, the Public Information offices shall promptly notify the person making the request and solicit further information. The Administrative Officer may assist the person in perfecting the request.

(c) Requests made in person at the Corporation's office during regular working hours (9 a.m. to 5 p.m., Monday through Friday, except Federal holidays) shall be processed as provided in subpart G of this part. The Corporation shall provide adequate inspection and copying facilities. Original records may be copied, but may not be released from the custody of the Corporation. Upon payment of the appropriate fee, copies will be provided to the requester by mail or in person.

(d) Every effort will be made to make a record in use by the staff of the Corporation available when requested, and availability may be deferred only to the extent necessary to avoid serious interference with the business of the Corporation.

(e) Notwithstanding paragraphs (a) through (d) of this section, informational materials and services, such as press releases, and similar materials prepared by the Corporation, shall be made available upon written or oral request. These services are considered as part of any informational program of the Government and are readily made available to the public. There is no fee for individual copies of such materials as long as they are in supply. In addition, the Corporation will continue to respond, without charge, to routine oral or written inquiries that do not involve direct access to records of the Corporation.

[41 FR 43143, Sept. 30, 1976, as amended at 48 FR 17354, Apr. 22, 1983]

§ 902.42 Request for records of concern to more than one government organization.

(a) If the release of a record covered by this subpart would be of concern to both the Corporation and another Federal agency, the record will be made available only after consultation with the other agency concerned. Records of another agency in the Corporation's possession will not be disclosed without the approval of the other agency.

(b) If the release of a record covered by this subpart would be of concern to both the Corporation and to a foreign, state or local government, the record will be made available by the Corporation only after consultation with the other interested foreign state or local government. Records of a foreign, state or local government will not be disclosed without the approval of the government concerned.

Subpart F—Exemptions From Public Access to Corporation Records

§ 902.50 Applicability.

(a) This subpart implements section 552(b) of title 5 U.S.C., which exempts certain records from public inspection under section 552(a). This subpart applies to records requested under subparts D and E of this part. The Corporation may, however, release a record authorized to be withheld under §§ 902.52 through 902.59 unless it determines that the release of that record would be inconsistent with a purpose of the aforementioned sections. Examples given in §§ 902.52 through 902.59 of records included within a particular statutory exemption are not necessarily illustrative of all types of records covered by the exemption. Any reasonably segregable portion of a record withheld under this subpart shall be provided to a requester, after deletion of the portions which are exempt under this subpart.

(b) This subpart does not authorize withholding of information or limit the availability of records to the public, except as specifically stated. This subpart is not authority to withhold information from Congress.

§ 902.51 Records relating to matters that are required by Executive order to be kept secret.

Records relating to matters that are specifically authorized under criteria established by an Executive order to be kept secret in the interest of national defense or foreign policy, include those within the scope of the following, and any further amendment of any of them, but only to the extent that the records are in fact properly classified pursuant to such Executive order:

(a) Executive Order 11652 of March 8, 1972 (3 CFR 1974 Comp. p. 339);

(b) Executive Order 10865 of February 20, 1960 (3 CFR 1959–1963 Comp. p. 398); and

(c) Executive Order 10104 of February 1, 1950 (3 CFR 1949–1953 Comp., p. 298).

These records may not be made available for public inspection.

§ 902.52 Records related solely to internal personnel rules and practices.

(a) Records related solely to internal personnel rules and practices that are within the statutory exemption include memoranda pertaining to personnel matters such as staffing policies, and policies and procedures for the hiring, training, promotion, demotion, and discharge of employees, and management plans, records, or proposals related to labor-management relationships.

(b) The purpose of this section is to authorize the protection of any record related to internal personnel rules and practices dealing with the relations between the Corporation and its employees.

§ 902.53 Records exempted from disclosure by statute.

(a) Records relating to matters that are specifically exempted by statute from disclosure may not be made available for public inspection. For example: section 1905 of title 18 U.S.C., protecting trade secrets, processes, and certain economic and other data obtained by examination or investigation, or from reports.

(b) The purpose of this section is to preserve the effectiveness of statutes of the kind cited as an example, in accordance with their terms.

§ 902.54 Trade secrets and commercial or financial information that is privileged or confidential.

(a) Trade secrets and commercial or financial information that are privileged and for which confidentiality is requested by the person possessing such privilege are within the statutory exemption. This includes the following:

(1) Commercial or financial information not customarily released to the public, furnished and accepted in confidence or disclosure of which could reasonably be expected to cause substantial competitive harm, or both;

(2) Statements of financial interest furnished by officers and employees of the Corporation;

(3) Commercial, technical, and financial information furnished by any person in connection with an application for a loan or a loan guarantee;

(4) Commercial or financial information customarily subjected to an attorney-client or similar evidentiary privilege; or,

(5) Materials in which the Corporation has a property right such as designs, drawings, and other data and reports acquired in connection with any research project, inside or outside of the Corporation, or any grant or contract.

(b) The purpose of this section is to authorize the protection of trade secrets and commercial or financial records that are customarily privileged or are appropriately given to the Corporation in confidence. It assures the confidentiality of trade secrets and commercial or financial information obtained by the Corporation through questionnaires and required reports to the extent that the information would not customarily be made public by the person from whom it was obtained. In any case in which the Corporation has obligated itself not to disclose trade secrets and commercial or financial information it receives, this section indicates the Corporation's intention to honor that obligation to the extent permitted by law. In addition, this section recognizes that certain materials, such as research data and materials, formulae, designs, and architectural drawings, have significance not as records but as items of property acquired, in many cases at public expense. In any case in which similar proprietary material in private hands would be held in confidence, material covered in this section may be held in confidence.

(c)(1) *In general.* For commercial or financial information furnished to the Corporation on or after March 30, 1988, the Corporation shall require the submitter to designate, at the time the information is furnished or within a reasonable time thereafter, any information the submitter considers confidential or privileged. Commercial or financial information provided to the Corporation shall not be disclosed pursuant to a Freedom of Information Act request except in accordance with this paragraph.

(2) *Notice to submitters.* The Corporation shall provide a submitter with prompt written notice of a request encompassing its commercial or financial information whenever required under paragraph (c)(3) of this section, and except as is provided in paragraph (c)(7) of this section. Such written notice shall either describe the exact nature of the information requested or provide copies of the records or portions thereof containing the information. Concurrently with its notice to a submitter, the Corporation shall inform a requestor in writing that the submitter is afforded a reasonable period within which to object to disclosure and that the 10 workday initial determination period provided for in 36 CFR 902.60 may therefore be extended.

(3) *When notice is required.* (i) For information submitted to the Corporation prior to March 30, 1988, the Corporation shall provide a submitter with notice of a request whenever:

(A) The information is less than ten years old;

(B) The information is subject to prior express commitment of confidentiality given by the Corporation to the submitter; or

(C) The Corporation has reason to believe that disclosure of the information may result in substantial competitive harm to the submitter.

(ii) For information submitted to the Corporation on or after March 30, 1988, the Corporation shall provide a submitter with notice of a request whenever:

(A) The submitter has in good faith designated the information as confidential, or

(B) The Corporation has reason to believe that disclosure of the information may result in substantial competitive harm to the submitter.

Notice of a request for information falling within the former category shall be required for a period of not more than ten years after the date of submission unless the submitter requests, and provides acceptable justification for, a specific notice period of greater duration. The submitter's claim of confidentiality should be supported by a statement or certification by an officer or authorized representative that the information in question is in fact confidential and has not been disclosed to the public.

(4) *Opportunity to object to disclosure.* Through the notice described in paragraph (c)(2) of this section, the Corporation shall afford a submitter a reasonable period within which to provide the Corporation with a detailed statement of any objection to disclosure. Such statement shall specify all grounds for withholding any of the information under any exemption of the Freedom of Information Act and, in the case of Exemption 4, shall demonstrate why the information is contended to be privileged or confidential. Information provided by a submitter pursuant to this paragraph may itself be subject to disclosure under the Freedom of Information Act.

(5) *Notice of intent to disclose.* The Corporation shall consider carefully a submitter's objections and specific grounds for nondisclosure prior to determining whether to disclose information. Whenever the Corporation decides to disclose information over the objection of a submitter, the Corporation shall forward to the submitter a written notice which shall include:

(i) A statement of the reasons for which the submitter's disclosure objections were not sustained;

(ii) A description of the information to be disclosed; and

(iii) A specified disclosure date.

Such notice of intent to disclose shall be forwarded a reasonable number of days, as circumstances permit, prior to the specified date upon which disclosure is intended. A copy of such disclosure notice shall be forwarded to the requester at the same time.

(6) *Notice of lawsuit.* Whenever a requester brings suit seeking to compel disclosure of information covered by paragraph (c) of this section, the Corporation shall promptly notify the submitter.

(7) *Exceptions to notice requirements.* The notice requirements of this section shall not apply if:

(i) The Corporation determines that the information should not be disclosed;

(ii) The information lawfully has been published or otherwise made available to the public;

(iii) Disclosure of the information is required by law (other than 5 U.S.C. 552); or

(iv) The designation made by the submitter in accordance with paragraphs (c)(1) and (c)(3)(ii) of this section appears obviously frivolous; except that, in such case, the Corporation shall provide the submitter with written notice of any final decision to disclose information within a reasonable number of days prior to a specified disclosure date.

[41 FR 43143, Sept. 30, 1976, as amended at 53 FR 10374, Mar. 31, 1988]

§ 902.55 Intragovernmental exchanges.

(a) Any record prepared by a Government officer or employee (including those prepared by a consultant or advisory body) for internal Government use is within the statutory exemption to the extent that it contains—

(1) Opinions, advice, deliberations, or recommendations made in the course of developing official action by the Government, but not actually made a part of that official action, or

(2) Information concerning any pending proceeding or similar matter including any claim or other dispute to be resolved before a court of law, administrative board, hearing officer, or contracting officer.

(b) This section has two distinct purposes. One is to protect the full and frank exchange of ideas, views, and opinions necessary for the effective functioning of the Government and to afford this protection both before and after any action is taken. This judicially recognized privilege of protection against disclosure in litigation or elsewhere is intended to assure that these resources will be fully and readily available to those officials upon whom the responsibility rests to take official and final Corporation action. However, the action itself, any memoranda made part of that action, and the facts on which it is based are not within this protection. The other purpose is to protect against the premature disclosure of material that is in the development stage if premature disclosure would be detrimental to the authorized and appropriate purposes for which the material is being used, or if, because of its tentative nature, the material is likely to be revised or modified before it is officially presented to the public.

(c) Examples of records covered by this section include minutes to the extent they contain matter described in paragraph (a) of this section; staff papers containing advice, opinions, suggestions, or exchanges of views, preliminary to final agency decision or action; budgetary planning and programming information; advance information on such things as proposed plans to procure, lease, or otherwise hire and dispose of materials, real estate, or facilities, documents exchanged preparatory to anticipated legal proceedings; material intended for public release at a specified future time, if premature disclosure would be detrimental to orderly processes of the Corporation; records of inspection, investigations, and surveys pertaining to internal management of the Department; and matters that would not be routinely disclosed under disclosure procedures in litigation and which are likely to be the subject of litigation. However, if such a record also contains factual information, that information must be made available under subpart E of this part unless the facts are so inextricably intertwined with deliverative or policymaking processes, that they cannot be separated without disclosing those processes.

§ 902.56 Protection of personal privacy.

(a) Any of the following personnel, medical, or similar records is within the statutory exemption if its disclosure would harm the individual concerned or be a clearly unwarranted invasion of his personal privacy:

(1) Personnel and background records personal to any officer or employee of the Corporation, or other person, including his home address;

(2) Medical histories and medical records concerning individuals, including applicants for licenses; or

(3) Any other detailed record containing personal information identifiable with a particular person.

(b) The purpose of this section is to provide a proper balance between the protection of personal privacy and the preservation of the public's rights to Corporation information by authorizing the protection of information that, if released, might unjustifiably invade an individual's personal privacy.

§ 902.57 Investigatory files compiled for law enforcement purposes.

(a) Files compiled by the Corporation for law enforcement purposes, including the enforcement of the regulations of the Corporation, are within the statutory exemption to the extent that production of such records would:

(1) Interfere with enforcement proceedings;

(2) Deprive a person of a right to a fair trial or an impartial adjudication;

(3) Constitute an unwarranted invasion of personal privacy;

(4) Disclose the identity of a confidential source and in the case of a record compiled by a criminal law enforcement authority in the courts of a criminal investigation, or by an agency conducting a lawful national security intelligence investigation, confidential information furnished only by the confidential source;

(5) Disclose investigative techniques and procedures; or,

(6) Endanger the life or physical safety of law enforcement personnel.

(b) The purpose of this section is to protect from disclosure the law enforcement files of the Corporation including files prepared in connection with related litigation and adjudicative proceedings. It includes the enforcement not only of criminal statutes but all kinds of laws.

§ 902.58 Reports of financial institutions.

Any material contained in or related to any examination, operating, or condition report prepared by, on behalf of, or for the use of, any agency responsible for the regulation or supervision of financial institutions is within the statutory exemption.

§ 902.59 Geological and geophysical information.

Any geological or geophysical information and data (including maps) concerning wells is within the statutory exemption.

Subpart G—Time Limitations

§ 902.60 Initial determination.

(a) An initial determination whether or not to release a record requested under subparts D and E of this part shall be made by the Public Information Offices within 10 workdays after the receipt of a request which complies with § 902.21. Failure of the requester to comply with those provisions may toll the running of the 10 day period until the request is identified as one being made under the Act. This time limit may be extended by up to 10 workdays in accordance with § 902.62.

(b) Upon making initial determination, the Administrative Officer shall immediately notify the person making the request as to its disposition. If the determination is made to release the requested record, the Administrative Officer shall make the record promptly available. If the determination is to deny the release of the requested record, the Public Information Officer shall immediately notify the requester of the denial and shall provide the following information.

(1) The reason for the determination, including a reference to the appropriate exemption provided in subpart F of this part;

(2) The right of the request or to appeal the determination as provided in subpart H of this part; and

(3) The name and position of each person responsible for the denial of the request.

[41 FR 43143, Sept. 30, 1976, as amended at 48 FR 17354, Apr. 22, 1983]

§ 902.61 Final determination.

A determination with respect to any appeal made pursuant to subpart H of this part will be made within twenty work days after the date of receipt of the appeal. The time limit provided may be extended by up to 10 workdays in accordance with § 902.62.

§ 902.62 Extension of time limits.

(a) In unusual circumstances, the time limits prescribed in §§ 902.60 and 902.61 may be extended by written notice to the person making the request. The notice shall set forth the reasons for the extension and the date on which a determination is expected to be dispatched. Under no circumstances shall the notice specify a date that would result in an extension for more than 10 workdays.

(b) As used in this section, *unusual circumstances* means (but only to the extent reasonably necessary to the proper processing of the particular request):

(1) The need to search for, collect and appropriately examine a voluminous amount of separate and distinct records which are demanded in a single request;

(2) The need to search for and collect the requested records from field facilities or other establishments that are separate from the office processing the request; or

(3) The need for consultation, which shall be conducted with all practicable speed, with another agency having a substantial interest in the determination of the request or among two or more components of the agency having substantial subject matter interest therein.

(c) Any person having made a request for records under this part shall have exhausted his administrative remedies with respect to such request, if the Corporation fails to comply with the applicable time limitations set forth in this subject.

Subpart H—Procedures for Administrative Appeal of Decisions Not To Disclose Records

§ 902.70 General.

Within the time limitations of subpart G of this part, if the Administrative Officer makes a determination not to disclose a record requested under subparts D and E of this part, he shall furnish a written statement of the reasons for that determination to the person making the request. The statement shall indicate the name(s) and title(s) of each person responsible for the denial of the request, and the availability of an appeal with the Corporation. Any person whose request for a record has

been denied may submit a written appeal to the Corporation requesting reconsideration of the decision.

[41 FR 43143, Sept. 30, 1976, as amended at 48 FR 17354, Apr. 22, 1983]

§ 902.71 Forms for appeal.

Although no particular written form is prescribed for on appeal, the letter or similar written statement appealing a denial of a record shall contain a description of the record requested, the name and position of the official who denied the request, the reason(s) given for the denial, and other pertinent facts and statements deemed appropriate by the appellant. The Corporation may request additional details if the information submitted is insufficient to support an appeal.

§ 902.72 Time limitations on filing an appeal.

An appeal must be submitted in writing within thirty days from the date of receipt of the initial written denial and must contain the information requested in § 902.71.

§ 902.73 Where to appeal.

An appeal shall be addressed to the Chairman of the Board of Directors, Pennsylvania Avenue Development Corporation, 1331 Pennsylvania Avenue, NW., Suite 1220 North, Washington, DC 20004.

[41 FR 43143, Sept. 30, 1976, as amended at 50 FR 45824, Nov. 4, 1985]

§ 902.74 Agency decision.

(a) The Chairman shall have sole authority to act on an appeal, which seeks to reverse an initial decision denying disclosure of a record. He shall review each appeal and provide the appellant and other interested parties with a written notice of his decision. The decision of the Chairman as to the availability of the record is administratively final.

(b) If the decision of the Chairman sustains the refusal to disclose, the notice of decision shall set forth the reasons for the refusal, including the specific exemptions from disclosure under the Act that are the bases of the decision not to disclose. The notice shall further advise the appellant that judicial review is available on complaint to the appropriate District Court of the United States, as provided in section 552(a)(4)(B) of title 5 U.S.C.

(c) As set out in § 902.61, the final decision on appeal shall be made within 20 workdays after the receipt of the appeal. An extension of this limitation is authorized as prescribed under § 902.62.

Subpart I—Fees

§ 902.80 General.

(a) This subpart prescribes fees for services performed by the Corporation under subparts D and E of this part. This subpart shall only apply to the services described herein. The fees for the service listed reflect the actual cost of the work involved in compiling requested record and copying, if necessary.

(b) A fee shall not be charged for time spent in resolving legal or policy issues.

[41 FR 43143, Sept. 30, 1976, as amended at 52 FR 26677, July 16, 1987]

§ 902.81 Payment of fees.

The fees prescribed in this part may be paid in cash or by check, draft, or postal money order made payable to the Pennsylvania Avenue Development Corporation.

[52 FR 26677, July 16, 1987]

§ 902.82 Fee schedule.

(a) *Definitions.* For purposes of this section—

(1) A *commercial use request* is a request from or on behalf of one who seeks information for a use or purpose that furthers the commercial, trade, or profit interests of the requester or the person on whose behalf the request is made. In determining whether a requester properly belongs in this category, the Corporation will determine the use to which the requester will put the records sought. Where the Corporation has reasonable cause to doubt the use to which a requester will put the records sought, or where that use is not clear from the request itself, the Corporation will seek additional clarification before assigning the request to a specific category.

(2) *Direct costs* means those expenditures the Corporation actually incurs in searching for and duplicating (and in the case of commercial requesters, reviewing) records to respond to an FOIA request. Direct costs include, for example, the salary of the employee performing work (the basic rate of pay for the employee plus 16 percent of that rate to cover benefits) and the cost of operating duplicating machinery. Not included in direct costs are overhead expenses such as costs of space, and heating or lighting the facility in which the records are stored.

(3) *Duplication* means the process of making a copy of a record necessary to respond to an FOIA request. Such copies can take the form of paper copy, microform, audio-visual materials, or machine-readable documentation (e.g., magnetic tape or disk), among others. The copy provided must be in a form that is reasonably usable by requesters.

(4) *Educational institution* means a preschool, a public or private elementary or secondary school, an institution of graduate higher education, an institution of undergraduate higher education, an institution of professional education, and an institution of vocational education, which operates a program or programs of scholarly research.

(5) *Non-commercial scientific institution* means an institution that is not operated on a *commercial* basis, within the meaning of paragraph (a)(1) of this section and that is operated solely for the purpose of conducting scientific research, the results of which are not intended to promote any particular product or industry.

(6) *Representative of the new media* means any person actively gathering news for an entity that is organized and operated to publish or broadcast news to the public. The term *news* means information that is about current events or that would be of current interest to the public. Examples of new media entities include television or radio stations broadcasting to the public at large, and publishers of periodicals (but only in those instances when they can qualify as disseminators of *news*) who make their products available for purchase or subscription by the general public. These examples are not intended to be all-inclusive. Moreover, as traditional methods of news delivery evolve (e.g., electronic dissemination of newspapers through telecommunications services), such alternative media would be included in this category. *Freelance* journalists may be regarded as working for a news organization if they can demonstrate a solid basis for expecting publication through that organization, even though not actually employed by it. A publication contract would be the clearest proof, but the Corporation may also look to the past publication record of a requester in making this determination.

(7) *Review* means the process of examining records located in response to a request that is for a commercial use (see paragraph (a)(1) of this section) to determine whether any portion of any record located is permitted to be withheld. It also includes processing any records for disclosure, e.g., doing all that is necessary to excise them and otherwise prepare them for release. Review does not include time spent resolving general legal or policy issues regarding the application of exemptions.

(8) *Search* includes all time spent looking for material that is responsive to a request, including page-by-page or line-by-line identification of material within records. A line-by-line search will not be conducted when merely duplicating an entire record would be the less expensive and quicker method of complying with the request. *Search* does not include *review* of material to determine whether the material is exempt from disclosure (see paragraph (a)(7) of this section). Searches may be done manually or by computer using existing programming.

(b) The following provisions shall apply with respect to services rendered to the public in processing requests for disclosure of the Corporation's records under this part:

(1) *Fee for duplication of records:* $0.25 per page. When the Corporation estimates that duplication charges are likely to exceed $25.00, it will notify the requester of the estimated amount of fees, unless the requester has indicated in advance his willingness to pay fees as high as those anticipated. The

Corporation will offer the requester the opportunity to confer with the Corporation's staff in order to reformulate the request to meet the requester's needs at a lower cost.

(2) *Search and review fees.* (i) Searches for records by clerical personnel: $7.00 per hour, including the time spent searching for and copying any records.

(ii) Search for and review of records by professional and supervisory personnel: $11.50 per hour spent searching for any record or reviewing any record to determine whether it may be disclosed, including time spent in copying any record.

(iii) Except for requests seeking records for a commercial use, the Corporation will provide the first 100 pages of duplication and the first two hours of search time without charge. The word *pages* means paper copies of a standard size, either 8½″ by 11″ or 14″ by 14″.

(3) *Duplication of architectural drawings, maps, and similar materials:* (per copy) $10.00.

(4) *Reproduction of 35 mm slides:* (per copy) $1.00.

(5) *Reproduction of enlarged, black and white photographs:* (per copy) $10.00.

(6) *Reproduction of enlarged color photographs:* (per copy) $17.00.

(7) *Certification and validation fee:* $1.75 for each certification or validation of a copy of any record.

(8) *Categories of FOIA requesters and fees to be charged*—(i) *Commercial use requesters.* When the Corporation receives a request for records for commercial use, it will assess charges to recover the full direct costs of searching for, reviewing for release, and duplicating the records sought. Requesters must reasonably describe the records sought.

(ii) *Educational and non-commercial scientific institution requesters.* The Corporation shall provide copies of records to requesters in this category for the cost of reproduction alone, excluding charges for the first 100 pages. To be eligible for inclusion in this category, requesters must show that the request is being made as authorized by and under the auspices of a qualifying institution and that the records are not sought for a commercial use but are sought in furtherance of scholarly (if the request is from an educational institution) or scientific (if the request is from a noncommercial scientific institution) research. Requesters must reasonably describe the records sought.

(iii) *Requesters who are representatives of the news media.* The Corporation shall provide documents to requesters in this category for the cost of reproduction alone, excluding charges for the first 100 pages. To be eligible for inclusion in this category, a requester must meet the criteria in the definition of *representative of the news media* in paragraph (a)(6) of this section, and his or her request must not be made for a commercial use. In reference to this class of requester, a request for records supporting the news dissemination function of the requester shall not be considered to be a request that is for a commercial use. Requestors must reasonably describe the records sought.

(iv) *All other requesters.* The Corporation will charge requesters who do not fit into any of the categories above fees which recover the full reasonable direct cost of searching for and reproducing records that are responsive to the request, except that the first 100 pages of reproduction and the first two hours of search time shall be furnished without charge. Requests from record subjects for records about themselves filed in the Corporation's systems of records will be treated under the fee provisions of the Privacy Act of 1974 which permit fees only for reproduction. Requesters must reasonably describe the records sought.

(9) *Interest.* In the event a requester fails to remit payment of fees charged for processing a request under this part within 30 days from the date such fees were billed, interest on such fees may be assessed beginning on the 31st day after the billing date at the rate prescribed in section 3717 of title 31 U.S.C., and will accrue from the date of the billing.

(10) *Unsuccessful searches.* Except as provided in paragraph (b)(8)(iv) of this section, the cost of searching for a requested record shall be charged even if the search fails to locate such record or it is determined that the record is exempt from disclosure.

(11) *Aggregating requests.* A requester must not file multiple requests at the same time, each seeking portions of a

record or records, solely in order to avoid payment of fees. When the Corporation reasonably believes that a requester, or a group of requesters acting in concert, is attempting to break a request down into a series of requests for the purpose of evading the assessment of fees, the Corporation may aggregate any such requests and charge accordingly.

(12) *Advance payments*. The Corporation will not require a requester to make an advance payment, i.e., payment before work is commenced or continued on a request unless:

(i) The Corporation estimates or determines that allowable charges that a requester may be required to pay are likely to exceed $250; or

(ii) If a requester has previously failed to make timely payments (i.e., within 30 days of billing date) of fees charged under this part, the requester may be required to pay the full amount owed plus any applicable interest accrued thereon or demonstrate that he has, in fact, paid the fee, and to make an advance payment of the full amount of the estimated fee before the Corporation begins to process a new request or a pending request from this requester.

(iii) With regard to any request coming within paragraphs (b)(12) (i) and (ii) of this section, the administrative time limits set forth in §§ 902.60, 902.61, and 902.62 of this part will begin to run only after the Corporation has received the requisite fee payments.

(iv) *Non-payment*. In the event of nonpayment of billed charges for disclosure of records, the provisions of the Debt Collection Act of 1982 (Pub. L. 97–365), including disclosure to consumer credit reporting agencies and referral to collection agencies, where appropriate, may be utilized to obtain payment.

[52 FR 26677, July 16, 1987]

§ 902.83 Waiver or reduction of fees.

Fees otherwise chargeable in connection with a request for disclosure of a record shall be waived or reduced where:

(a) Disclosure of the information is in the public interest because it is likely to contribute significantly to public understanding of the operations or activities of the government and is not primarily in the commercial interest of the requester; or

(b) The costs of routine collection and processing of the fee are likely to equal or exceed the amount of the fee.

[52 FR 26679, July 16, 1987]

PART 903—PRIVACY ACT

Sec.
903.1 Purpose and scope.
903.2 Definitions.
903.3 Procedures for notification of records pertaining to individuals.
903.4 Requests for access to records.
903.5 Response to request for access.
903.6 Appeal of initial denial of access.
903.7 Requests for amendment of record.
903.8 Review of request for amendment of record.
903.9 Appeal of initial adverse determination of request for amendment of record.
903.10 Disclosure of records to persons or agencies.
903.11 Routine uses of records maintained in the system of records.
903.12 Fees for furnishing and reproducing records.
903.13 Penalties.

AUTHORITY: 5 U.S.C. 552a; 40 U.S.C. 870.

SOURCE: 42 FR 5973, Feb. 1, 1977, unless otherwise noted.

§ 903.1 Purpose and scope.

The purpose of this part is to enable the Pennsylvania Avenue Development Corporation to implement the Privacy Act of 1974, and in particular the provisions of 5 U.S.C. 552a, as added by the Act. The Act was designed to insure that personal information about individuals collected by Federal agencies be limited to that which is legally authorized and necessary, and that the information is maintained in a manner which precludes unwarranted intrusions upon individual privacy. The regulations in this part establish, and make public, procedures whereby an individual can:

(a) Request notification of whether or not the Corporation maintains or has disclosed a record pertaining to him or her,

(b) Request access to such a record or an accounting of its disclosure,

(c) Request that the record be amended, and

(d) Appeal any initial adverse determination of a request to amend a record.

§ 903.2 Definitions.

As used in this part:

(a) *Agency* means agency as defined in 5 U.S.C. 552(e).

(b) *Corporation* means the Pennsylvania Avenue Development Corporation.

(c) *Workday* shall be a day excluding a Saturday, Sunday or legal holiday.

(d) *Individual* means a citizen of the United States or an alien lawfully admitted for permanent residence.

(e) *Maintain* includes maintain, collect, use, or disseminate.

(f) *Record* means any items, collection, or grouping of information about an individual that is maintained by an agency, including, but not limited to, his or her education, financial transactions, medical history, and criminal or employment history and that contains his or her name, or the identifying number, symbol or other identifying particular assigned to the individual, such as a finger or voice print or a photograph.

(g) The term *system of records* means a group of records under the control of an agency from which information is retrieved by the name of the individual or by some identifying number, symbol, or other identifying particular assigned to the individual.

(h) The term *statistical record* means a record in a system of records maintained for statistical research or reporting purposes only and not used in whole or in part in making any determination about an identifiable individual except as provided by section 8 of title 13 U.S.C.

(i) The term *routine use* means, with respect to the disclosure of a record, the use of such record for a purpose which is compatible with the purpose for which it was collected.

§ 903.3 Procedures for notification of records pertaining to individuals.

(a) An individual making a written or oral request under the Privacy Act (5 U.S.C. 522a) shall be informed of any Corporation systems of records which pertain to the individual, if the request contains a reasonable identification of the appropriate systems of records as described in the notice published in the FEDERAL REGISTER.

(b) Requests may be made in person between the hours of 9:00 a.m. and 5:00 p.m. Monday through Friday, (except legal holidays). The request should be addressed to the Privacy Protection Officer, Pennsylvania Avenue Development Corporation, 1331 Pennsylvania Avenue, NW., Suite 1220 North, Washington, DC 20004. The Privacy Protection Officer of the Corporation will require adequate personal identification before processing the request. If a request is made in writing it must be under the signature of the requesting individual and include the individual's address, date of birth, and an additional proof of identification, such as a photocopy of a driver's license or similar document bearing the individual's signature. A notarized, signed statement is acceptable to verify the identity of the individual involved without additional proof.

[42 FR 5973, Feb. 1, 1977, as amended at 50 FR 45824, Nov. 4, 1985]

§ 903.4 Requests for access to records.

(a) Except as otherwise provided by law or regulation, an individual, upon request made in person or delivered in writing may gain access to his or her record or to any information pertaining to him or her which is contained in a system of records maintained by the Corporation, and to review the record and have a copy made of all or any portion thereof in a form comprehensible to him or her. An individual seeking access to a Corporation record may be accompanied by a person of his or her choosing. However, the Corporation will require a written statement from the individual authorizing discussion of his or her record in the accompanying person's presence.

(b) A request under paragraph (a) of this section shall be directed to the Privacy Protection Officer at the place, times and in the manner prescribed in § 903.3(a) and (b). The request should include the following information:

(1) The name of the individual;

(2) If made in writing, the information required under § 903.3(b);

(3) A description of system or systems of records which contain the record to which access is requested;

(4) The approximate dates covered by the record; and,

(5) A suggested date and time when the individual would like to view the record.

(c) Requests which do not contain information sufficient to identify the record requested will be returned promptly to the requester, with a notice indicating that information is lacking. Individuals making requests in person will be informed of any deficiency in the specification of records or identification at the time that the request is made. The Privacy Protection Officer of the Corporation will require adequate personal identification before processing a request made in person.

§ 903.5 Response to request for access.

(a) Within 10 days of receipt of a request made under § 903.4 the Privacy Protection Officer shall determine whether access to the record is available under the Privacy Act and shall notify the requesting individual in person or in writing of that determination.

(b) Notices granting access shall inform the individual when and where the requested record may be seen, how copies may be obtained, and of any anticipated fees or charges which may be incurred under § 903.11. Access shall be provided within 30 days of receipt of the request unless the Corporation, for good cause shown, is unable to provide prompt access, in which case the individual shall be informed in writing within the 30 days as to the cause for delay and when it is anticipated that access will be granted.

(c) Notices denying access shall state the reasons for the denial, and advise the individual that the decision may be appealed in accordance with the procedures set forth in § 903.6.

§ 903.6 Appeal of initial denial of access.

(a) After receiving notification of an initial denial of access to a record, an individual may request a review and reconsideration of the request by the Executive Director of the Corporation, or an officer of the Corporation designated by him, but other than the Privacy Protection Officer. Appeals for review shall be in writing, addressed to the Executive Director, Pennsylvania Avenue Development Corporation, 1331 Pennsylvania Avenue, NW., Suite 1220 North, Washington, DC 20004. The appeal shall identify the record as in the original request, shall indicate the date of the original request and the date of the initial denial, and shall indicate the expressed basis for the denial.

(b) Not later than 30 days after receipt of an appeal, the Executive Director, or an officer of the Corporation designated by him, will complete review of the appeal and the initial denial and either:

(1) Determine that the appeal should be granted, and notify the individual in writing to that effect; or,

(2) Determine that the appeal should be denied because the information requested is exempt from disclosure. If the reviewing official denies the appeal, he or she shall advise the individual in writing of the decision and the reasons for reaching it, and that the denial of the appeal is a final agency action entitling the individual to seek judicial review in the appropriate district court of the United States as provided in 5 U.S.C. 552a(g).

[42 FR 5973, Feb. 1, 1977, as amended at 50 FR 45824, Nov. 4, 1985]

§ 903.7 Requests for amendment of record.

(a) An individual may request amendment of a Corporation record pertaining to him or to her, if the individual believes that the record contains information which is not accurate, relevant, timely, or complete. The request shall be in writing, whether presented in person or by mail, shall state with specificity the record sought to be amended, and shall propose wording of the correction or amendment sought. The request shall be directed to the Privacy Protection Officer at the place, times, and in the manner specified in § 903.3 (a) and (b). Assistance in preparing a request to amend a record,

or to appeal an initial adverse determination under §903.3(a), may be obtained from the Privacy Officer, Pennsylvania Avenue Development Corporation, 1331 Pennsylvania Avenue, NW., Suite 1220 North, Washington, DC 20004.

(b) Not later than 10 days after the date of receipt of a request the Privacy Protection Officer will acknowledge it in writing. The acknowledgement will clearly describe the request, and if a determination has not already been made, will advise the individual when he or she may expect to be advised of action taken on the request. For requests presented in person, written acknowledgement will be provided at the time when the request is presented. No separate acknowledgement of receipt will be issued if the request can be reviewed and the individual advised of the results of the review within the 10 day period.

[42 FR 5973, Feb. 1, 1977, as amended at 50 FR 45824, Nov. 4, 1985]

§903.8 Review of request for amendment of record.

(a) Upon receipt of a request for amendment of a record the Privacy Protection Officer will promptly review the record and: Either:

(1) Amend any portion thereof which the individual believes is not accurate, relevant, timely, or complete; or

(2) Inform the individual of refusal to amend the record in accordance with the request. In reviewing a record pursuant to a request to amend it, the Corporation will assess the accuracy, relevance, timeliness and completeness of the record in terms of the criteria established in 5 U.S.C. 522a(e)(5). In reviewing a record in response to a request to amend it by deleting information, the Corporation will ascertain whether or not the information is relevant and necessary to accomplish a purpose of the Corporation required to be accomplished by statute or by executive order of the President, as prescribed by 5 U.S.C. 522a(e)(1).

(b) The Corporation shall take the action specified in paragraph (a) of this section within 30 days of receipt of a request for amendment of a record, unless unusual circumstances preclude completion of the action within that time. If the expected completion date for the action, as indicated in the acknowledgement provided pursuant to §903.5 cannot be met, the individual shall be advised of the delay and of a revised date when action is expected to be completed. If necessary for an accurate review of the record, the Corporation will seek, and the individual will supply, additional information in support of his or her request for amending the record.

(c) If the Corporation agrees with all or any portion of an individual's request to amend a record, the Corporation will so advise the individual in writing, and amend the record to the extent agreed to by the Corporation. Where an accounting of disclosures has been kept, the Corporation will advise all previous recipients of the record of the fact that the amendment was made and the substance of the amendment.

(d) If the Corporation disagrees with all or any portion of an individual's request to amend a record, the Corporation shall:

(1) Advise the individual of its adverse determination and the reasons therefor, including the criteria used by the Corporation in conducting the review;

(2) Inform the individual that he or she may request a review of the adverse determination by the Executive Director of the Corporation, or by an officer of the Corporation designated by the Executive Director; and,

(3) Advise the individual of the procedures for requesting such a review including the name and address of the official to whom the request should be directed.

(e) If the Corporation is apprised by another agency of any corrections or other amendments made to a record contained in the Corporation's system of records, the Corporation will promptly amend its record and advise in writing all previous recipients of the record of the fact that the amendment was made and the substance of the amendment.

§903.9 Appeal of initial adverse determination of request for amendment of record.

(a) After receipt by an individual of notice of an adverse determination by

the Privacy Protection Officer concerning a request to amend a record, the individual may, within 60 working days after the date of receipt of the notice, appeal the determination by seeking a review by the Executive Director of the Corporation, or by an officer of the Corporation designated by him. The appeal shall be in writing, mailed or delivered to the Executive Director, Pennsylvania Avenue Development Corporation, 1331 Pennsylvania Avenue, NW, Suite 1220 North, Washington, DC 20004. The appeal shall identify the record in the same manner as it was identified in the original request, shall indicate the dates of the original request and of the adverse determination and shall indicate the expressed basis for that determination. In addition, the appeal shall state briefly the reasons why the adverse determination should be reversed.

(b) Not later than 30 days after receipt of an appeal, the Executive Director, or an officer of the Corporation designated by him, will complete a review of the appeal and the initial determination, and either: (1) Determine that the appeal should be granted, take the appropriate action with respect to the record in question, and notify the individual accordingly; or, (2) determine that the appeal should be denied.

(c) The reviewing official may, at his or her option, request from the individual such additional information as is deemed necessary to properly conduct the review. If additional time is required, the Executive Director may, for good cause shown, extend the period for action beyond the 30 days specified above. The individual will then be informed in writing of the delay and the reasons therefor, and of the approximate date on which action is expected to be completed.

(d) If the reviewing official denies the appeal, he or she shall advise the individual in writing:

(1) Of the decision and the reasons for reaching it;

(2) That the denial of the appeal is a final agency action entitling the individual to seek judicial review in the appropriate district court of the United States, as provided in 5 U.S.C. 552a(g); and,

(3) That the individual may file with the Corporation a concise statement setting forth the reasons for his or her disagreement with the refusal of the Corporation to amend the record in question.

(e) Any individual having received notices of a denial of an appeal to amend a record may file a statement of disagreement with the Executive Director not later than 60 working days from the date of receipt of the notice. Such statements shall ordinarily not exceed one page in length, and the Corporation reserves the right to reject statements of excessive length. Upon receipt of a proper and timely statement of disagrement, the Corporation will clearly annotate the record in question to indicate the portion of the record which is in dispute. In any subsequent disclosure containing information about which the individual has filed a statement of disagreement, the Corporation will provide a copy of the statement together with the record to which it pertains. In addition, prior recipients of the disputed record will be provided with a copy of statements of disagreement to the extent that an accounting of disclosures was maintained. If the Corporation deems it apropriate, it may also include in any disclosure its own concise statement of the reasons for not making the amendments requested.

[42 FR 5973, Feb. 1, 1977, as amended at 50 FR 45824, Nov. 4, 1985]

§ 903.10 Disclosure of records to persons or agencies.

(a) The Corporation will not disclose any record which is contained in a system of records, by any means of communication to any person or to another agency except:

(1) Pursuant to a written request by, or with the prior written consent of, the individual to whom the record pertains;

(2) To those officers and employees of the Corporation who have a need for the record in the performance of their duties;

(3) When required under 5 U.S.C. 522 (The Freedom of Information Act); or

(4) Pursuant to the conditions of disclosure contained in 5 U.S.C. 552a(b)(3) through 5 U.S.C. 522a(b)(11).

(b) The Privacy Protection Officer of the Corporation shall keep an accounting of each disclosure made pursuant to paragraph (a)(4) of this section, in accordance with 5 U.S.C. 552a(c). Except for disclosures made pursuant to 5 U.S.C. 552a(b)(7), the Privacy Protection Officer shall make the accounting kept under this paragraph available to an individual to whom the record pertains, upon his or her request. An individual requesting an accounting of disclosures should do so at the place, times and in the manner specified in § 903.3 (a) and (b).

§ 903.11 Routine uses of records maintained in the system of records.

(a) It shall be a routine use of the records in this system of records to disclose them to the Department of Justice when:

(1) The Corporation, or any component thereof; or

(2) Any employee of the Corporation in his or her official capacity; or

(3) Any employee of the Corporation in his or her individual capacity where the Department of Justice has agreed to represent the employee; or

(4) The United States, where the Corporation determines that litigation is likely to affect the Corporation or any of its components, is a party to litigation or an interest in such litigation, and the use of such records by the Department of Justice is deemed by the Corporation to be relevant and necessary to the litigation, provided, however, that in each case, the Corporation determines that disclosure of the records to the Department of Justice is a use of the information contained in the records that is compatible with the purpose for which the records were collected.

(b) It shall be a routine use of records maintained by the Corporation to disclose them in a proceeding before a court or adjudicative body before which the Corporation is authorized to appear, when:

(1) The Corporation, or any component thereof; or

(2) Any employee of the Corporation is his or her individual capacity;

(3) Any employee of the agency in his or her individual capacity where the Department of Justice has agreed to represent the employee; or

(4) The United States, where the Corporation determines that litigation is likely to affect the Corporation or any of its components is a party to litigation or has an interest in such litigation and the Corporation determines that use of such records is relevant and necessary to the litigation, provided, however, that, in each case, the Corporation determines that disclosure of the records to the Department of Justice is a use of the information contained in the records that is compatible with the purpose for which the records were collected.

[52 FR 34384, Sept. 11, 1987; 52 FR 39224, Oct. 21, 1987]

§ 903.12 Fees for furnishing and reproducing records.

(a) Individuals will not be charged a fee for:

(1) The search and review of the record;

(2) Any copies of the record produced as a necessary part of the process of making the record available for access;

(3) Any copies of the requested record when it has been determined that access can only be accomplished by providing a copy of the record through the mail. The Privacy Protection Officer may provide additional copies of any record without charge when it is determined that it is in the interest of the Government to do so.

(b) Except as provided in paragraph (a) of this section, fees will be charged for the duplication of records at a rate of 10¢ per page. If it is anticipated that the total fee chargeable to an individual under this subpart will exceed $25, the Corporation shall promptly notify the requester of the anticipated cost. An advance deposit equal to 50% of the anticipated total fee will be required unless waived by the Privacy Protection Officer. In notifying the requester of the anticipated fee, the Privacy Protection Officer shall extend an offer to the requester to consult so that the request might be reformulated in a manner which will reduce the fee, yet still meet the needs of the requester.

(c) Fees must be paid in full prior to delivery of the requested copies. Remittances may be in the form of cash, personal check, bank draft or a postal money order. Remittances, other than cash shall be made payable to the Treasurer of the United States.

[42 FR 5973, Feb. 1, 1977. Redesignated at 52 FR 34384, Sept. 11, 1987; 52 FR 39224, Oct. 21, 1987]

§ 903.13 Penalties.

The provision of 5 U.S.C. 552a(i), as added by section 3 of the Privacy Act, make it a misdemeanor subject to a maximum fine of $5,000, to knowingly and willfully request or obtain any record concerning an individual from an agency under false pretenses. Similar penalties attach for violations by agency officers and employees of the Privacy Act or regulations established thereunder.

[42 FR 5973, Feb. 1, 1977. Redesignated at 52 FR 34384, Sept. 11, 1987; 52 FR 39224, Oct. 21, 1987]

PART 904—UNIFORM RELOCATION ASSISTANCE AND REAL PROPERTY ACQUISITION FOR FEDERAL AND FEDERALLY ASSISTED PROGRAMS

AUTHORITY: Sec. 213, Uniform Relocation Assistance and Real Property Acquisition Policies Act of 1970, Pub. L. 91–646, 84 Stat. 1894 (42 U.S.C. 4601) as amended by the Surface Transportation and Uniform Relocation Assistance Act of 1987, title IV of Pub. L. 100–17, 101 Stat. 246–256 (42 U.S.C. 4601 *note*).

§ 904.1 Uniform relocation assistance and real property acquisition.

Regulations and procedures for complying with the Uniform Relocation Assistance and Real Property Acquisition Policies Act of 1970 (Pub. L. 91–646, 84 Stat. 1894, 42 U.S.C. 4601), as amended by the Surface Transportation and Uniform Relocation Assistance Act of 1987 (title IV of Pub. L. 100–17, 101 Stat. 246–255, 42 U.S.C. 4601 *note*) are set forth in 49 CFR part 24.

[52 FR 48022, Dec. 17, 1987 and 54 FR 8912, Mar. 2, 1989]

PART 905—STANDARDS OF CONDUCT

Subpart A—General Provisions

Sec.
905.735–101 Principles and purpose.
905.735–102 Adoption of regulations.
905.735–103 Definitions.
905.735–104 Applicability.
905.735–105 Designation of counselor.
905.735–106 Notification to employees and special Government employees.
905.735–107 Review of statements of employment and financial interests.
905.735–108 Remedial and disciplinary action.

Subpart B—Conduct and Responsibilities of Employees

905.735–201 General standards of conduct.
905.735–202 Gifts, entertainment, and favors.
905.735–203 Outside employment and other activity.
905.735–204 Disclosure of information.
905.735–205 Purchase of Government-owned property.

Subpart C—Conduct and Responsibilities of Special Government Employees

905.735–301 General standards of conduct.

Subpart D—Special Standards Applicable to Certain Board Members

905.735–401 Standards.
905.735–402 Advice and determination.

Subpart E—Statements of Employment and Financial Interests

905.735–501 Form and content of statements.
905.735–502 Statements of employment and financial interests by employees.
905.735–503 Statements of employment and financial interests by special Government employees.
905.735–504 Procedures for obtaining statements.
905.735–505 Confidentiality of statements.

Subpart F—Conduct and Responsibilities of Former Employees—Enforcement

905.737–101 Applicable provisions of law.
905.737–102 Enforcement proceedings.

AUTHORITY: 40 U.S.C. 875, unless otherwise noted.

SOURCE: 43 FR 60902, Dec. 29, 1978, unless otherwise noted.

Subpart A—General Provisions

§905.735–101 Principles and purpose.

In order to assure that the business of the Pennsylvania Avenue Development Corporation is conducted effectively, objectively, and without improper influence or appearance thereof, all employees and special Government employees must observe unquestionable standards of integrity and conduct. Employees and special Government employees shall not engage in criminal, infamous, dishonest, immoral, or disgraceful conduct or other conduct prejudicial to the Government. All employees and special Government employees must avoid conflicts of private interest with their public duties and responsibilities. They must consider the propriety of any action in relation to general ethical standards of the highest order, so that public confidence in the integrity of the Government will not be impaired. Certain standards are set by law. Others are set by regulation and by policy. This part incorporates by reference applicable general standards of conduct and prescribes additional necessary elements. Taken together, this part constitutes the Corporation's regulations on this subject. Failure to observe any of the regulations in this part is cause for remedial action.

§905.735–102 Adoption of regulations.

Under the authority of 5 CFR 735.104(f), the Corporation adopts the following sections of the Civil Service Commission regulations on ''Employee Responsibilities and Conduct'' found in part 735 of title 5, Code of Federal Regulations: §§735.202 (a), (d), (e), (f) through 735.210; 735.302; 735.303(a); 735.304; 735.305(a); 735.306; 735.404 through 735.411; and 735.412 (b) and (d).

[43 FR 60902, Dec. 29, 1978, as amended at 45 FR 15927, Mar. 12, 1980]

§905.735–103 Definitions.

As used in this part:

(a) *Board Member* means any member of the Board of Directors of the Pennsylvania Avenue Development Corporation, appointed or serving under section 3, Pub. L. 92–578, 86 Stat. 1267 (40 U.S.C. 872).

(b) *Chairman* means the Chairman of the Board of Directors and President of the Corporation.

(c) *Conflict* means the subordination of public responsibilities to private interests, and includes the appearance of such subordination.

(d) *Consultant* means an individual who serves as an advisor to an officer or division of the Corporation, as distinguished from an officer or employee who carries out the agency's duties and responsibilities. He gives his views or opinions on problems or questions presented him by the Corporation, but he neither performs nor supervises performance of operating functions. Ordinarily, he is expert in the field in which he advises, but he need not be a specialist. His expertness may lie in his possession of a high order of broad administrative, professional, or technical experience indicating that his ability and knowledge make his advice distinctively valuable to the agency. (Chapter 304, Federal Personnel Manual).

(e) *Corporation* means the Pennsylvania Avenue Development Corporation, created by the Pennsylvania Avenue Development Corporation Act of 1972, Pub. L. 92–578, 86 Stat. 1266 (40 U.S.C. 871).

(f) *Employee* means an officer or employee of the Corporation, but does not include a special Government employee as defined herein. The term includes those Board Members who are determined to be officers or employees of the executive or legislative branches of the United States or of the District of Columbia. The term does not include elected officials.

(g) *Executive order* means Executive Order 11222 of May 8, 1965.

(h) *Expert* means a person with excellent qualifications and a high degree of attainment in a professional, scientific, technical, or other field. His knowledge and mastery of the principles, practices, problems, methods, and techniques of his field of activity, or of a specialized area in the field, are clearly superior to those usually possessed by ordinarily competent individuals in that activity. His attainment is such that he usually is regarded as an authority or as a practitioner of unusual competence and skill by other

persons in the profession, occupation, or activity. (Chapter 304, Federal Personnel Manual.)

(i) *Head of the agency* means the Chairman.

(j) *Person* means an individual, a corporation, a company, an association, a firm, a partnership, a society, a joint stock company, or any other institution or organization.

(k) *Special Government Employee* means an officer or employee of the Corporation who is retained, designated, appointed or employed to perform, with or without compensation, for not more than 130 days during any period of 365 consecutive days, temporary duties either on a full time or intermittent basis (18 U.S.C. 202(a)). The term includes those Board Members who are appointed from private life and required to file a statement of financial interests with the Chairman of the Civil Service Commission pursuant to part IV of the Executive order, or who are determined to be special government employees of the executive or legislative branches of the United States or the District of Columbia.

§ 905.735–104 Applicability.

This part applies to each employee and to each special Government employee of the Corporation as defined herein and supplements the Executive order and part 735 of title 5, Code of Federal Regulations, promulgated by the Civil Service Commission on employee responsibilities and conduct.

§ 905.735–105 Designation of counselor.

In accordance with 5 CFR 735.105(a), the General Counsel of the Corporation is designated to be Ethics Counselor and shall serve as the Corporation's liaison with the Civil Service Commission for matters covered in this part.

§ 905.735–106 Notification to employees and special Government employees.

(a) At the time these regulations are published, or amended, and not less often than once annually thereafter, the Corporation shall furnish each employee and special Government employees with a copy of the regulations. The Administrative Officer shall insure that each newly hired employee and special Government employee is given a copy of these regulations prior to or at the time of entry on duty.

(b) All employees and special Government employees will be advised by the Corporation of the availability of counseling regarding the provisions of this part.

§ 905.735–107 Review of statements of employment and financial interests.

The Ethics Counselor of the Corporation shall review each statement of employment and financial interests submitted under § 905.735–402 or § 905.735–403, except his own and those statements of special Government employees who file with the Chairman of the Civil Service Commission. When review discloses a conflict between the interests of an employee or special Government employee of the Corporation and the performance of his services for the Corporation, the Ethics Counselor shall bring the conflict to the attention of the employee or special Government employee, grant the individual an opportunity to explain the conflict, and attempt to resolve it. If the conflict cannot be resolved, the Ethics Counselor shall forward a written report on the conflict to the Chairman, recommending appropriate action. The Chairman shall review the report, solicit an explanation from the individual, and seek resolution of the conflict.

§ 905.735–108 Remedial and disciplinary action.

(a) In addition to any penalties prescribed by law, the Chairman, after review and consideration of any explanation given by an employee or special Government employee concerning a conflict of interest, may institute appropriate remedial action to resolve or otherwise eliminate the conflict. Appropriate remedial action may include, but is not limited to:

(1) Divestment by the employee or the special Government employee of the conflicting interest;

(2) Disqualification of the individual from a particular assignment;

(3) Changes in the assigned duties of the individual; or

(4) Disciplinary action.

(b) Where the situation warrants some form of disciplinary action, the

Chairman may choose from a wide range including a warning or reprimand, suspension, reduction in grade or pay, or termination of employment. The disciplinary action selected should reflect the character and degree of the offense which demands such action and should be reasonable in light of that offense.

(c) Remedial action, whether disciplinary or otherwise, shall be effected in accordance with applicable laws, Executive orders, and regulations.

Subpart B—Conduct and Responsibilities of Employees

§ 905.735–201 General standards of conduct.

(a) All employees shall conduct themselves on the job so as to efficiently discharge the work of the Corporation. Courtesy, consideration, and promptness are to be observed in dealing with the public, Congress, and other governmental agencies.

(b) All employees shall conduct themselves off the job so as not to reflect adversely upon the Corporation or the Federal service.

(c) Employee conduct shall exemplify the highest standards of integrity. Employees shall avoid any action, whether or not specifically prohibited by this part, which might result in, or create the appearance of:

(1) Using public office for private gain;

(2) Giving preferential treatment to any person;

(3) Impeding Government efficiency or economy;

(4) Losing complete independence or impartiality;

(5) Making a Government decision outside official channels; or

(6) Affecting adversely the confidence of the public in the integrity of the Government.

§ 905.735–202 Gifts, entertainment, and favors.

Pursuant to paragraph (b) of 5 CFR 735.202, the following exceptions to the restriction of paragraph (a) of that section are authorized. Employees may:

(a) Accept gifts and other things of value under circumstances which arise from an obvious family or personal relationship(s) (such as between the parents, children, or spouse of the employee and the employee), when the circumstances make it clear that it is those relationships rather than the business of the persons concerned which are the motivating factors;

(b) Accept food and refreshments of nominal value on infrequent occasions in the ordinary course of a luncheon, dinner, or other meeting, or on an inspection tour where an employee may properly be in attendance;

(c) Accept loans from banks or other financial institutions on customary terms to finance proper and usual activities of employees, such as home purchase;

(d) Accept unsolicited advertising or promotional materials, such as pens, pencils, note pads, calendars and other items of nominal intrinsic value;

(e) Participating without payment in privately funded activities in the Washington metropolitan area if: (1) An invitation is addressed to the Chairman or Executive Director of the Corporation and approved by either of them; (2) no provision for individual payment is readily available; and (3) the activities are limited to ceremonies of interest to both the local community and the Corporation (such as ground breakings or openings), or are sponsored or encouraged by the Federal or District Government as a matter of policy; and,

(f) Participate in widely attended lunches, dinners, and similar gatherings sponsored by industrial, commercial, technical and professional associations, or groups, for discussion of matters of interest both to the Corporation and the public. Participation by an employee at the host's expense is appropriate if the host is an association or group and not an individual.

§ 905.735–203 Outside employment and other activity.

As provided in 5 CFR 735.203, an employee of the Corporation may engage in outside employment or other outside activity not incompatible with the full and proper discharge of the duties and responsibilities of his Government employment. An employee who proposes to engage in outside employment shall

report that fact in writing to his supervisor prior to undertaking such employment.

§ 905.735–204 Disclosure of information.

(a) Every employee who is involved in the development, maintenance or use of Corporation records containing information about individuals shall familiarize himself with the requirements and penalties of the Privacy Act of 1974 (5 U.S.C. 552a) and Corporation regulations (36 CFR part 903) promulgated thereunder concerning the utilization of and access to such records.

(b) Every employee is directed to cooperate to the fullest extent possible in discharging the requirement of the Freedom of Information Act (5 U.S.C. 522) and Corporation regulations promulgated thereunder (36 CFR part 902). Every effort should be made to furnish service with reasonable promptness to persons who seek access to Corporation records and information.

§ 905.735–205 Purchase of Government-owned property.

Employees of the Corporation and members of their immediate families may purchase Government-owned personal property when it is offered for sale by the General Services Administration or any Federal agency other than the Corporation (41 CFR 101–45.302).

Subpart C—Conduct and Responsibilities of Special Government Employees

§ 905.735–301 General standards of conduct.

(a) Special Government employees of the Corporation shall adhere to applicable regulations adopted under § 904.735–102, except 5 CFR 735.203(b). In addition, the standards of conduct set forth in §§ 905.735–201, 905.735–204, and 905.735–205 shall apply to special Government employees.

(b) Special Government employees of the Corporation may teach, lecture, or write consistent with the provisions of 5 CFR 735.203(c).

(c) Pursuant to 5 CFR 735.305(b), the provisions concerning gifts, entertainment, and favors set forth in § 905.735–202 are hereby made applicable to special Government employees.

Subpart D—Special Standards Applicable to Certain Board Members

§ 905.735–401 Standards.

Section 3(c)(8) of the Pennsylvania Avenue Development Corporation Act of 1972, Pub. L. 92–578, 86 Stat. 1267 (40 U.S.C. 872(c)(8)) specifies that the eight members appointed to the Board by the President from private life, at least four of whom shall be residents of the District of Columbia, ''shall have knowledge and experience in one or more fields of history, architecture, city planning, retailing, real estate, construction or government.'' As a result of these prerequisites for appointment of a private member to the Board of Directors, conflicts could arise for these Board Members as the Corporation proceeds with various development activities. Accordingly, Board Members should perform their responsibilities for the operation and management of the Corporation consistent with these regulations, and other applicable Federal laws and regulations, and consistent with the highest level of fiduciary responsibility.

§ 905.735–402 Advice and determination.

The Corporation's Ethics Counselor is readily available for consultation when a Board Member seeks advice as to the appropriateness of his actions in light of this part, the Executive order, or title 18 U.S.C., chapter 11. A Board Member has an affirmative duty to advise the Ethics Counselor of any potential conflict of interest which may arise with the individual's participation in any particular matter before the Corporation. If advised to do so, the Board Member should submit to the Chairman for determination the question of whether or not the conflict will disqualify the Board Member from participating in the action to be taken by the Corporation. Under the authority delegated to the Chairman pursuant to 18 U.S.C. 208(b), the Chairman may find that the Board Member need not be disqualified from participating in the particular matter, if:

(a) The Board Member makes a full disclosure of the financial interest; and

(b) The Chairman furnishes him with a written determination in advance of the action that the interest is not so substantial as to be deemed likely to affect the integrity of the services which the Government may expect from the Board Member. Requests for similar determinations for conflicts posed by the financial interests of the Chairman himself shall be submitted to the Chairman of the Civil Service Commission.

Subpart E—Statements of Employment and Financial Interests

§ 905.735–501 Form and content of statements.

Statements of employment and financial interests required to be submitted under this subpart by employees and special Government employees shall contain the information required in the formats prescribed by the Civil Service Commission in the Federal Personnel Manual.

§ 905.735–502 Statements of employment and financial interests by employees.

(a) Employees of the Corporation in the following named positions shall prepare and submit statements of employment and financial interests:

(1) Executive Director;

(2) Assistant Director Legal—General Counsel;

(3) Assistant Director/Finance;

(4) Development Director;

(5) Secretary of the Corporation Administrative Officer;

(6) Construction Manager;

(7) Senior Architect/Planner;

(8) Chief, Real Estate Operations;

(9) Any Contracting Officer of the Corporation; and

(10) Any employee classified as a GS–13 or above whose duties and responsibilities are such that the ethics counselor determines a statement should be filed.

(b) Each statement of employment and financial interests required by this section, except that of the General Counsel, shall be submitted to the Ethics Counselor, Office of the General Counsel, Pennsylvania Avenue Development Corporation, 1331 Pennsylvania Avenue, NW., Suite 1220 North, Washington, DC 20004. The General Counsel, as Ethics Counselor, shall submit his statement directly to the Chairman for review.

(c) An employee who believes that his position has been improperly included in this section as one requiring the submission of a statement of employment and financial interests may obtain a review of this determination upon a written request to the Chairman.

[43 FR 60902, Dec. 29, 1978, as amended at 50 FR 45824, Nov. 4, 1985]

§ 905.735–503 Statements of employment and financial interests by special Government employees.

All special Government employees shall submit a statement of employment and financial interest prior to beginning employment or service with the Corporation. Each statement shall be submitted to the Ethics Counselor, Office of the General Counsel, Pennsylvania Avenue Development Corporation, 1331 Pennsylvania Avenue, NW., Suite 1220 North, Washington, D.C. 20004, except that the statements of Board Members appointed from private life shall be filed with the U.S. Civil Service Commission.

[43 FR 60902, Dec. 29, 1978, as amended at 50 FR 45824, Nov. 4, 1985]

§ 905.735–504 Procedures for obtaining statements.

(a) Upon the adopting of the regulations of this part, the Ethics Counselor shall deliver to the incumbent of each position named in § 905.735–402 and to each special Government employee, two copies of the appropriate form for filing a statement of employment and financial interests. An enclosure with the forms shall advise that:

(1) The original of the completed form must be returned in a sealed envelope, marked ''Personal—In Confidence,'' to the Ethics Counselor within the time specified by the Ethics Counselor;

(2) The services of the ethics counselor are available to advise and assist in preparation of the statement;

(3) Any additions or deletions to the information furnished must be reported

in a supplementary statement at the end of the calendar quarter in which the change occurs; or in the case of a special Government employee, at the time the change occurs; and

(4) No later than June 30 of each year, all special Government employees and employees required to file under § 905.735–402(a) shall file an annual supplementary statement to update the information previously filed.

(b) The Administrative Officer shall be responsible for assuring that a completed statement of employment and financial interests is obtained from each special Government employee prior to the beginning of employment or service with the Corporation. The Administrative Officer shall promptly forward the statements to the Ethics Counselor for review.

§ 905.735–505 Confidentiality of statements.

The Ethics Counselor shall hold in confidence each statement of employment and financial interests, and each supplementary statement within his control. Access to or disclosure of information contained in these statements shall not be allowed, except as the Commission or the Ethics Counselor determine for good cause shown, consistent with the Privacy Act of 1974 (5 U.S.C. 552a), and the regulations and pertinent notices of systems of records prepared by the Civil Service Commission and the Corporation in accordance with that Act.

Subpart F—Conduct and Responsibilities of Former Employees—Enforcement

AUTHORITY: 18 U.S.C. 207(j); sec. 6(5), Pub. L. 92–578, 86 Stat. 1270 (40 U.S.C. 875)(5).

§ 905.737–101 Applicable provisions of law.

Former employees of the Corporation must abide by the provisions of 18 U.S.C. 207 and 5 CFR 737.1 through 737.25, which bar certain acts by former Government employees that may reasonably give the appearance of making unfair use of prior Government employment and affiliations. Violation of those provisions will give rise to Corporation enforcement proceedings as provided in § 905.737–102, and may also result in criminal sanctions, as provided in 18 U.S.C. 207.

[48 FR 38233, Aug. 23, 1984]

§ 905.737–102 Enforcement proceedings.

(a) *Delegation.* The Chairman of the Corporation may delegate his or her authority under this subpart.

(b) *Initiation of disciplinary hearing.* (1) Information regarding a possible violation of 18 U.S.C. 207 or 5 CFR part 737 should be communicated to the Chairman. The Chairman shall promptly initiate an investigation to determine whether there is reasonable cause to believe that a violation has occurred.

(2) On receipt of information regarding a possible violation of 18 U.S.C. 207, and after determining that such information appears substantiated, the Chairman of the Corporation shall expeditiously provide such information, along with any comments or regulations of the Corporation, to the Director of the Office of Government Ethics and to the Criminal Division, Department of Justice. The Corporation shall coordinate any investigation with the Department of Justice to avoid prejudicing criminal proceedings, unless the Department of Justice communicates to the Corporation that it does not intend to initiate criminal prosecution.

(3) Whenever the Corporation has determined after appropriate review, that there is reasonable cause to believe that a former employee has violated 18 U.S.C. 207 or 5 CFR part 737, it shall initiate a disciplinary proceeding by providing the former employee with notice as defined in paragraph (c) of this section.

(4) At each stage of any investigation or proceeding under this section, the Chairman shall take whatever steps are necessary to protect the privacy of the former employee. Only those individuals participating in an investigation or hearing shall have access to information collected by the Corporation pursuant to its investigation of the alleged violation.

(c) *Adequate notice.* (1) The Corporation shall provide the former employee with adequate notice of its intention to

institute a proceeding and an opportunity for a hearing.

(2) Notice to the former employee must include:

(i) A statement of the allegations (and the basis thereof) sufficiently detailed to enable the former employee to prepare an adequate defense;

(ii) Notification of the right to a hearing;

(iii) An explanation of the method by which a hearing may be requested; and

(iv) Notification that if a hearing is not requested within thirty days of receipt of notice, the Corporation will issue a final decision finding the alleged violations to have occurred.

(3) Failure to request a hearing within thirty days of the receipt of notice will be deemed an admission of the allegations contained in the notice and will entitle the Corporation to issue a final decision finding the alleged violations to have occurred.

(d) *Presiding official.* (1) The presiding official at proceedings under this subpart shall be the Chairman, or an individual to whom the Chairman has delegated authority to make an initial decision (hereinafter referred to as *examiner*).

(2) An examiner shall be an employee of the Corporation who is familiar with the relevant provisions of law and who is otherwise qualified to carry out the duties of that position. He or she shall be impartial. No individual who has participated in any manner in the decision to initiate the proceedings may serve as an examiner.

(e) *Time, date and place.* (1) The hearing shall be conducted at a reasonable time, date, and place.

(2) On setting a hearing date, the presiding official shall give due regard to the former employee's need for:

(i) Adequate time to prepare a defense properly; and

(ii) An expeditious resolution of allegations that may be damaging to his or her reputation.

(f) *Hearing rights.* A hearing shall include the following rights:

(1) To represent oneself or to be represented by counsel;

(2) To introduce and examine witnesses and to submit physical evidence;

(3) To confront and cross-examine adverse witnesses;

(4) To present oral argument; and

(5) To receive a transcript or recording of the proceedings, on request.

(g) *Burden of proof.* In any hearing under this subpart, the Corporation has the burden of proof and must establish substantial evidence of a violation.

(h) *Hearing decision.* (1) The presiding official shall make a determination exclusively on matters of record in the proceeding, and shall set forth in the decision all findings of fact and conclusions of law relevant to the matters at issue. If the hearing is conducted by the Chairman, the resulting written determination shall be an initial decision.

(2) Within thirty days of the date of an initial decision, either party may appeal the decision to the Chairman. The Chairman shall base his or her decision on such appeal solely on the record of the proceedings on those portions thereof cited by the parties to limit the issues.

(3) If the Chairman modifies or reverses the initial decision, he or she shall specify such findings of fact and conclusions of law as are different from those of the examiner.

(4) If no appeal is taken from an initial decision within thirty days, the initial decision shall become a final decision.

(i) *Sanctions.* The Chairman shall take appropriate action in the case of any individual who is found to be in violation of 18 U.S.C. 207 or 5 CFR part 737 after a final decision by:

(1) Prohibiting the individual from making, on behalf of any other person except the United States, any formal or informal appearance before, or, with the intent to influence, any oral or written communication to, the Corporation on any matter of business for a period not to exceed five years, which may be accomplished by directing employees of the Corporation to refuse to participate in any such appearance or to accept any such communication; or

(2) Taking other appropriate disciplinary action.

(j) *Judicial review.* Any person found by the Corporation to have participated in a violation of 18 U.S.C. 207 or

5 CFR part 737 may seek judicial review of the determination in an appropriate United States District Court.

[48 FR 38233, Aug. 23, 1984]

PART 906—AFFIRMATIVE ACTION POLICY AND PROCEDURE

Subpart A—Development Program

Sec.
906.1 Purpose and policy.
906.2 Definitions.
906.3 Procedures.
906.4 Formulation of affirmative action plan.
906.5 Administration of affirmative action plan.
906.6 Implementation.
906.7 Incentives.
906.8 Review and monitoring.
906.9 Voluntary compliance.
906.10 Confidentiality.

Subpart B [Reserved]

EXHIBIT A TO PART 906—SUGGESTED MINIMUM GUIDELINES AND GOALS
EXHIBIT B TO PART 906—GUIDELINES FOR ESTABLISHING STRATEGY TO IMPLEMENT AFFIRMATIVE ACTION PERSONNEL PLAN

AUTHORITY: Pennsylvania Avenue Development Corporation Act of 1972, as amended, sec. 6(6), Pub. L. 92–578, 86 Stat. 1270 (40 U.S.C. 875(6)); E.O. 11625 (36 FR 19967) Oct. 14, 1971; title VII Civil Rights Act of 1964 (42 U.S.C. 2000e–2); Rehabilitation, Comprehensive Services, and Developmental Disabilities Amendments of 1978, secs. 119, 122(d)(2), Pub. L. 95–602, 92 Stat. 2982, 2987 (29 U.S.C. 794); E.O. 12138 (44 FR 29637) May 22, 1979.

SOURCE: 44 FR 37226, June 26, 1979, unless otherwise noted.

Subpart A—Development Program

§ 906.1 Purpose and policy.

(a) One of the objectives stated in the Congressionally approved Pennsylvania Avenue Plan—1974 is insuring that minority businesses, investors, and workers have an opportunity to share in the benefits that will occur as a result of redevelopment. Accordingly, the Corporation will take affirmative action to assure full minority participation in activities and benefits that result from implementation of The Pennsylvania Avenue Plan—1974.

(b) It is the policy of the Pennsylvania Avenue Development Corporation to foster a progessive Affirmative Action Program that affords minorities, women, handicapped persons, and Vietnam era veterans a fair and meaningful share in the opportunities generated by the development activities of the Corporation.

(c) It is mandatory for developers who respond to a solicitation for proposals made by the Corporation to comply with the rules stated in subpart A of part 906.

(d) It is mandatory for developers who receive property interests of ten percent (10%) or more of the area of a development parcel from the Corporation to comply with the rules stated in subpart A of part 906.

(e) The Corporation will encourage any entity not described in paragraphs (c) and (d) of this section to comply with the requirements set forth in this subpart A of part 906.

§ 906.2 Definitions.

As used in this part:

(a) *Affirmative Action Plan* means a plan which at a minimum includes:

(1) A statement of the affirmative action policy of the development team and a list of the names of the members of the development team including equity investors, and identification of minority owned businesses and investors;

(2) A contracting and purchasing plan;

(3) A leasing plan;

(4) A personnel plan;

(5) An equity investment plan;

(6) The goals, timetables and strategy for achieving the goals of the developer;

(7) A list of specific, quantifiable committed opportunities; and

(8) Designation of an Affirmative Action Officer.

(b) *Committed Opportunity* means an opportunity set aside and committed for the sole involvement of a woman, minority group member, Vietnam era veteran, handicapped person, or minority owned business, including opportunities for training and equity investment.

(c) *Contracting and purchasing plan* means a plan for the subject project which at a minimun includes the following:

(1) A list of all minority enterprises and minority owned businesses that are involved in the development proposal or its implementation;

(2) An analysis of the types of contracts and purchases that will be required by the development team in order to implement the development through and including operation of the completed development;

(3) A list of goals and timetables by category of purchase or contract for involvement of minority owned businesses in the development process;

(4) Strategy for achieving the goals established; and

(5) A list of committed opportunities for the involvement of minority owned businesses in the development process.

(d) *Developer* means a person partnership, company, corporation, association, or other entity that develops a new structure on a site or substantially renovates a structure on a site within the Corporation's development area where the site either: (1) Has been offered to the public by the Corporation for development, or (2) the Corporation has transferred real property rights that equal or exceed ten percent (10%) of the area of the development parcel.

(e) *Development parcel* is an area of land established by the Corporation to be a minimum developable site under The Pennsylvania Avenue Plan—1974, as amended, and The Planning and Design Objectives, Controls, and Standards of the Corporation (36 CFR part 920 *et seq.*).

(f) *Development team* means the group that submits a proposal to develop a parcel including developers, architects, engineers, lawyers, financial institutions, insurance companies, and others who help formulate, develop, and otherwise make a proposal to the Corporation.

(g) *Equity Investment Plan* means a plan for the subject project which at a minimum includes the following:

(1) A statement as to whether or not equity investment has been or will be solicited to implement the subject project;

(2) A statement as to whether or not a joint venture has been or will be formed to implement the subject project;

(3) If equity investment has been solicited or if a joint venture has been formed, a statement of the efforts made to involve members of minority groups and women when these opportunities were offered;

(4) If equity investment will be solicited, or a joint venture will be formed, a plan to involve members of minority groups and women when these opportunities are offered, including a list of committed opportunities;

(5) A list of goals and a timetable for securing participation of members of minority groups and women in equity investment and joint venture.

(h) *Handicapped person* means any person who: (1) Has a physical or mental impairment that substantially limits one or more of the person's major life activities, (2) has a record of such impairment.

(i) *Leasing plan* means a plan for the subject project which at a mimimum includes the following:

(1) A retail plan showing the types of retail businesses to be included in the project and a plan for the types of uses for the balance of the development;

(2) Goals and methods for inclusion of minority enterprises as tenants in the project;

(3) Committed opportunities for leasing to minority enterprises.

(j) *Minority Enterprise* means any enterprise that is either a minority owned business or a not for profit or non-profit organization (as defined in 26 U.S.C. 501(c)(3) or (c)(6)) and also fulfills one or more of the following criteria:

(1) The Board of Directors or equivalent policy making body is comprised of members, a majority of whom are minorities or women and the chief executive officer of the organization is a minority group member or a woman; or

(2) The objectives of the organization as described in its charter are substantially directed toward the betterment of minorities or women.

(k) *Minority group member* means any *person* residing in the United States who is Negro, Hispanic, Oriental, Native American, Eskimo, or Aleut, as defined below:

(1) Negro—is an individual of the Negro race of African origin;

(2) Hispanic—is an individual who is descended from and was raised in or participates in the culture of Spain, Portugal, or Latin America, or who has at least one parent who speaks Spanish or Portuguese as part of their native culture;

(3) Oriental—is an individual of a culture, origin, or parentage traceable to the areas south of the Soviet Union, East of Iran, inclusive of the islands adjacent thereto, located in the Pacific including, but limited to, Taiwan, Indonesia, Japan, Hawaii, and the Philippines, together with the islands of Polynesia;

(4) Native American—is an individual having origins in any of the original people of North America, who is recognized as an Indian by either a tribe, tribal organization, or suitable authority in the community. For purposes of this section a suitable authority in the community may be an educational institution, a religious organization, or a state or Federal agency.

(5) Eskimo—is an individual having origins in any of the original peoples of Alaska;

(6) Aleut—is an individual having origins in any of the original peoples of the Aleutian Islands.

(l) *Minority owned business* means a business that is:

(1) A sole proprietorship owned by a minority group member or a woman;

(2) A business entity at least 50 percent of which is owned by minority group members or women;

(3) A publicly owned business at least 51 percent of the stock of which is owned by minority group members or women;

(4) A certified minority owned business as evidenced by a certificate satisfactory to the Corporation's Affirmative Action Officer, and signed by the owner or the executive officer of the minority owned business.

For purposes of this definition, ownership means that the risk of gain or loss and the amount of control exercised must be equivalent to the ownership percentage.

(m) *Personnel plan* means a plan for the subject project which at a minimum includes the following:

(1) An analysis of participation of minority group members, women, Vietnam era veterans, and handicapped persons in the development project including an evaluation by category of employment, i.e., professional and managerial, skilled, semi-skilled, trainee, and other, and the number of employees in each category;

(2) An analysis of the salaries of minority group members, women, handicapped persons, and Vietnam era veterans showing the relative position of these employees with those not covered by the Affirmative Action Plan;

(3) Goals and timetables for employment by category and salary level of minorities, women, Vietnam era veterans, and handicapped persons employed for the development parcel;

(4) Strategy for achieving the goals established (see Exhibit B);

(5) A list of committed opportunities for the employment of minority group members, women, Vietnam era veterans, and handicapped persons.

(n) *Vietnam era veteran* means a person who:

(1) Served on active duty for a period of more than 180 days, any part of which occurred during the Vietnam era, and was discharged or released therefrom with other than a dishonorable discharge; or

(2) Was discharged or released from active duty for a service-connected disability if any part of such active duty was performed during the Vietnam era.

§ 906.3 Procedures.

(a) Affirmative Action Plans must be submitted to the Corporation at the following times:

(1) At the time a response is submitted to the Corporation's solicitation for proposals, the response must include an Affirmative Action Plan;

(2) If a property right exceeding 10 percent of the area of the development parcel is made available by the Corporation, but without the Corporation having made a solicitation for proposals, the developer must submit an Affirmative Action Plan within 30 days after the start of negotiations with the Corporation.

(b) Affirmative Action Plans will be reviewed as follows:

(1) Each Affirmative Action Plan submitted to the Corporation will be reviewed by the Corporation's Affirmative Action Officer, or his designee.

(2) In the case of a developer who responds to a solicitation for proposals, the Affirmative Action Plan will be reviewed by the Affirmative Action Officer, and if the Plan is in substantial compliance with the goals set forth in Exhibit A, the Plan and the recommendation of the Affirmative Action Officer will be submitted to the Chairman of the Board for approval prior to the Board's final selection.

(3) In the case of a developer who receives 10 percent or more of the area of a development parcel from the Corporation, the Affirmative Action Plan will be reviewed by the Corporation's Affirmative Action Officer, and if the Plan is in substantial compliance with the goals set forth in Exhibit A, the Plan and the recommendation of the Affirmative Action Officer will be submitted to the Chairman of the Board for approval within 15 days of submission.

(4) The Chairman may approve any Affirmative Action Plan that is not in substantial compliance with the goals set forth in Exhibit A, but for which the developer has documented a genuine effort to meet the goals of the regulations and complied with the spirit of the Corporation's policy.

(5) The Chairman may, in his discretion, submit any Affirmative Action Plan to the Board of Directors for approval, if there is not substantial compliance with the goals set forth in Exhibit A.

(6) The review of the Affirmative Action Plan will determine conformity with The Pennsylvania Avenue Plan—1974, the policy of the Corporation's Board of Directors, and the regulations and guidelines set forth in this subpart A, part 906.

(c) Revisions: (1) The Corporation may require a developer at any time prior to approval of the Affirmative Action Plan to revise the Plan for compliance with the requirements of this subpart.

(2) Each developer required to comply with this subpart must submit for approval an up-dated Affirmative Action Plan at the commencement of construction, at the commencement of occupancy, and at the commencement of operation or management of any portion of the facility by the developer or a related entity. Each revision of the Affirmative Action Plan must address all the requirements set forth in §906.4.

(3) The Corporation's Affirmative Action Officer will review all revisions submitted to the Corporation. If the revision is a substantial change from the originally approved Plan, the review procedures set forth in paragraph (b) of this section will be applicable. If the revision submitted is not a substantial change from the originally approved Plan, the Corporation's Affirmative Action Officer may approve the revision.

§906.4 Formulation of affirmative action plan.

(a) The developer, in formulating the Affirmative Action Plan, should consider all phases of development from establishment of the development team to operation and management of the development project including each component of the project (e.g., hotel, retail, office, residential). The developer should also consider the personnel profile of project contractors, subcontractors.

(b) For each phase and each component, the developer should give consideration to creating business and employment opportunities and committed opportunities in the following:

(1) Equity participation;

(2) Professional and technical services such as legal, architectural, engineering, and financial;

(3) Purchasing materials and supplies in connection with construction and operation;

(4) Contracting for construction, operation, and maintenance; and,

(5) Financing, including construction and permanent financing, and other financial and banking services.

§906.5 Administration of affirmative action plan.

(a) The developer shall appoint an Affirmative Action Officer, and for projects exceeding $10 million in cost,

the person appointed must have affirmative action as a primary responsibility.

(b) The developer shall report to the Corporation periodically its progress in meeting the goals and timetables in its Affirmative Action Plan with respect to its contracting and purchasing plan, leasing plan, and committed opportunities. In meeting the reporting requirements the developer shall:

(1) Count an individual only once for reporting purposes;

(2) Count an individual in the first appropriate category as follows:

(i) Minority Group Member;

(ii) Handicapped Person;

(iii) Woman;

(iv) Vietnam Era Veteran;

(3) Report the dollar amount of contracts and purchases from minority owned businesses including subcontracts;

(4) In the event 10 percent or more of the dollar amount of a contract, subcontract, or purchase from a minority owned business is performed by other than a minority owned business, the developer shall report only the dollar amount performed by the minority owned business.

§ 906.6 Implementation.

(a) Each developer's Affirmative Action Plan will be incorporated into the real estate agreement between the developer and the Corporation.

(b) Each developer shall include a clause requiring a contracting and purchasing plan and a personnel plan in any contract exceeding $500,000.

(c) Each developer should consider including a clause requiring a contracting and purchasing plan and a personnel plan in any contract less than $500,000.

(d) In order that the Corporation may be of assistance, and to the extent practical, the developer shall notify the Corporation's Affirmative Action Officer of any failure to meet the approved Affirmative Action Plan.

(e) The Corporation, at the request of the developer, shall provide the developer with assistance for meeting the goals set forth in the Affirmative Action Plan. Such assistance may be provided in the form of lists of minority enterprises, sources for recruiting and advertising, as well as other available information.

§ 906.7 Incentives.

(a) At the request of the developer, the Corporation may agree to deferral of a portion of rental, not to exceed 50 percent, during construction and during the first year of operation following construction of any phase of the development project. Allowable rent deferral during the construction phase will be two percent of the total base rent for each one percent of the value of all construction contracts which have been awarded to Minority Owned Businesses, not to exceed 50 percent. Rent deferral during the first year of operation following construction of any phase of the development project will be four percent for each one percent of total equity owned by minority group members, minority owned businesses, and women.

(b) Following review of Affirmative Action reports submitted to the Corporation pursuant to § 906.5(b), the Corporation will determine the developer's compliance with the goals set forth in the approved Affirmative Action Plan. Compliance with the goals established in the Plan will be measured by adding the percentages reported including overages in each category and dividing that by the number of categories covered in the Plan.

(c) If 75 percent compliance is not achieved during any rent deferral period, the Corporation will afford the developer 120 days to achieve at least that level of compliance. If, at the end of that 120 day period, 75 percent compliance is not achieved, all rental deferral, together with interest, will be due and payable to the Corporation on the 10th day following receipt of written notice that payment of the deferred rent has been accelerated.

§ 906.8 Review and monitoring.

The Corporation, either by its employees, consultants, or other government agency, shall analyze and monitor compliance with the developer's approved Affirmative Action Plan. The Corporation shall rely on the reports submitted by the developer. However:

(a) Further investigation by the Corporation may be undertaken if problems are brought to the attention of the Corporation through any reliable source, or if any formal complaints are filed against the developer that relate to performance of the Affirmative Action Plan; and

(b) The Corporation reserves the right to audit the records of the developer that pertain to any report submitted to the Corporation.

§ 906.9 Voluntary compliance.

The Corporation will encourage any individual or entity not described in § 906.1(c) or (d) to submit and adopt an Affirmative Action Plan on any development project for which the Corporation's review and approval is required to determine conformity of the development project with The Pennsylvania Avenue Plan—1974. Any such Affirmative Action Plan should accompany the development plans.

§ 906.10 Confidentiality.

All information submitted to the Corporation pursuant to this subpart A will be kept confidential, except as availability to the public may be required by the Freedom of Information Act.

Subpart B [Reserved]

EXHIBIT A TO PART 906—SUGGESTED MINIMUM GUIDELINES AND GOALS

The following are suggested for consideration by developers in formulation of minimum affirmative action goals for the development parcel:

(a) Equity participation—10 percent participation by minority group members, women, and minority owned businesses as investors in ownership of the development parcel.

(b) Contracts for professional and technical services—20 percent of the dollar value of the contracts to minority owned businesses.

(c) Persons providing professional or technical services—20 percent should be minority group members, women, handicapped persons, or Vietnam era veterans.

(d) Construction contracting—15 percent of the total dollar value to minority owned businesses. (In order to accomplish this goal, the developer must require that any prime contractor show at least 15 percent minority subcontractors unless the prime contractor is a minority contractor.)

(e) Construction employment should comply with the Washington Plan as a minimum.

(f) Purchasing—20 percent of the dollar value of all purchases of materials and supplies to minority owned businesses.

(g) Hotel employment—20 percent of all hotel employees, 15 percent of all personnel earning an excess of $2,000 a month (in 1978 dollars), and 60 percent of trainees for hotel positions should be minority group members, women, handicapped persons, or Vietnam era veterans.

(h) Leasing of space—15 percent of the retail space should be targeted for minority enterprises.

(i) Committed opportunities—should be created for professional, technical, construction, hotel, or other type operations where the representation of minority group members, women, or handicapped persons in a field is inconsistent with the demographic profile of the Washington metropolitan area.

EXHIBIT B TO PART 906—GUIDELINES FOR ESTABLISHING STRATEGY TO IMPLEMENT AFFIRMATIVE ACTION PERSONNEL PLAN

The following are suggested as the types of activities to be considered in the development of strategies for the affirmative action personnel plan:

(1) ''Vigorous'' searching for qualified minority and women applicants for job openings in professional and managerial positions, often including recruitment visits to educational institutions with large minority or female enrollments.

(2) Wide dissemination of affirmative action policy in advertisements and employment literature.

(3) Utilization of minority media in recruitment advertisements.

(4) Notification of job openings to minority community organizations and associations.

(5) Listing of all employment openings with compensation of under $20,000 per year at a local office of the State Employment Service (or union hiring hall when union labor is required).

(6) Periodic review of minority, female, Vietnam era veteran, and handcapped employees to identify underutilized and unutilized skills and knowledge as well as opportunities for reassignment.

(7) Utilization of merit promotion and on-the-job training programs to create career ladders or otherwise qualify minority, female, Vietnam era veteran, and handicapped employees for advancement.

PART 907—ENVIRONMENTAL QUALITY

Sec.
907.1 Policy.
907.2 Purpose.
907.3 Definitions.
907.4 Designation of responsible Corporation official.
907.5 Specific responsibilities of designated Corporation official.
907.6 Major decision points.
907.7 Determination of requirement for EIS.
907.8 Actions that normally require an EIS.
907.9 Preparation of an EIS.
907.10 Categorical exclusions.
907.11 Actions that normally require an environmental assessment.
907.12 Preparation of an environmental assessment.
907.13 Public involvement.
907.14 Corporation decision making procedures.
907.15 Approval of private development proposals.
907.16 Actions where lead Agency designation is necessary.
APPENDIX A TO PART 907

AUTHORITY: 40 U.S.C. 875(8); 42 U.S.C. 4321.

SOURCE: 47 FR 8768, Mar. 2, 1982, unless otherwise noted.

§ 907.1 Policy.

The Pennsylvania Avenue Development Corporation's policy is to:

(a) Use all practical means, consistent with the Corporation's statutory authority, available resources, and national policy, to protect and enhance the quality of the human environment;

(b) Ensure that environmental factors and concerns are given appropriate consideration in decisions and actions by the Corporation;

(c) Use systematic and timely approaches which will ensure the integrated use of the natural and social sciences and environmental design arts in planning and decision making which may have an impact on the human environment;

(d) Develop and utilize ecological and other environmental information in the planning and development of projects implementing the Plan;

(e) Invite the cooperation and encourage the participation, where appropriate, of Federal, District of Columbia, and regional authorities and the public in Corporation planning and decision-making processes, which affect the quality of the human environment; and

(f) Minimize any possible adverse effects of Corporation decisions and actions upon the quality of the human environment.

§ 907.2 Purpose.

These regulations are prepared to supplement Council on Environmental Quality Regulations for implementing the procedural provisions of the National Environmental Policy Act of 1969, as amended, and describe how the Pennsylvania Avenue Development Corporation intends to consider environmental factors and concerns in the Corporation's decision making process.

§ 907.3 Definitions.

(a) *CEQ Regulations* means the regulations for implementing the procedural provisions of the National Environmental Policy Act of 1969 as promulgated by the Council on Environmental Quality, Executive Office of the President, appearing at 40 CFR parts 1500–1509 (43 FR 55978–56007) and to which this part is a supplement.

(b) *The Act of October 27, 1972* or *Act* means the Pennsylvania Avenue Development Corporation Act of 1972, Pub. L. 92–578, October 27, 1972, 86 Stat. 1266 (40 U.S.C. 871).

(c) *The Plan* means The Pennsylvania Avenue Plan—1974, prepared by the Pennsylvania Avenue Development Corporation pursuant to the Act of October 27, 1972.

(d) *The Corporation* means the Pennsylvania Avenue Development Corporation, a wholly owned government corporation of the United States created by the Act of October 27, 1972.

(e) *Board of Directors* means the governing body of the Corporation in which the powers and management of the Corporation are vested by the Act of October 27, 1972.

(f) *EIS* means an environmental impact statement as defined in § 1508.11 of the CEQ Regulations.

(g) *Final EIS* means The Final Environmental Impact Statement, dated September 1974, prepared by the Corporation on The Pennsylvania Avenue Plan—1974.

(h) *Development Area* means the area under the Corporation's jurisdiction as specified in section 2(f) of the Act of October 27, 1972 and for which The Plan has been prepared and will be implemented by the Corporation.

(i) *Decision Maker* means the Board of Directors, unless a delegation to the Chairman, a member or committee of the Board of Directors, or the Executive Director has been made by the Bylaws of the Corporation, a resolution of the Board of Directors, or an appropriate written delegation of authority.

(j) *Private Developer* means an individual, firm, joint venture, or other entity other than the Corporation which seeks to construct, reconstruct, rehabilitate, or restore real property within the development area.

(k) Other terms used in this part are defined in 40 CFR part 1508 of the CEQ Regulations.

§907.4 Designation of responsible Corporation official.

The Development Director is the Corporation official responsible for implementation and operation of the Corporation's policies and procedures on environmental quality and control.

§907.5 Specific responsibilities of designated Corporation official.

(a) Coordinate the formulation and revision of Corporation policies and procedures on matters pertaining to environmental protection and enhancement.

(b) Establish and maintain working relationships with relevant government agencies concerned with environmental matters.

(c) Develop procedures within the Corporation's planning and decisionmaking processes to ensure that environmental factors are properly considered in all proposals and decisions in accordance with this part.

(d) Develop, monitor, and review the Corporation's implementation of standards, procedures, and working relationships for protection and enhancement of environmental quality and compliance with applicable laws and regulations.

(e) Monitor processes to ensure that the Corporation's procedures regarding consideration of environmental quality are achieving their intended purposes.

(f) Advise the Board of Directors, officers, and employees of the Corporation of technical and management requirements of environmental analysis, of appropriate expertise available, and, with the assistance of the Office of the General Counsel, of relevant legal developments.

(g) Monitor the consideration and documentation of the environmental aspects of the Corporation's planning and decisionmaking processes by appropriate officers and employees of the Corporation.

(h) Ensure that all environmental assessments and, where required, all EIS's are prepared in accordance with the appropriate regulations adopted by the Council on Environmental Quality and the Corporation, and are submitted with all proposed legislation.

(i) Consolidate and transmit to appropriate parties the Corporation's comments on EIS's and other environmental reports prepared by other agencies.

(j) Acquire information and prepare appropriate reports on environmental matters required of the Corporation. Information collection activities will be conducted in accordance with the Paperwork Reduction Act of 1980 and approval of OMB will be obtained prior to commencing such activities.

(k) Coordinate Corporation efforts to make available to other parties information and advice on the Corporation's policies for protecting and enhancing the quality of the environment.

§907.6 Major decision points.

(a) The possible environmental effects of a proposed action or project must be considered along with technical, economic, and other factors throughout the decisionmaking process. For most Corporation projects there are three distinct stages in the decision making process:

(1) Conceptual or preliminary stage;

(2) Detailed planning or final approval stage;

(3) Implementation stage.

(b) Environmental review will be integrated into the decision making process of the Corporation as follows:

(1) During the conceptual or preliminary approval study stage, the responsible Corporation official shall determine whether the proposed action or project is one which is categorically excluded, requires an environmental assessment or an EIS.

(2) Prior to proceeding from the conceptual or preliminary approval stage to the detailed planning or final approval stage, an environmental assessment and the determination as to whether an EIS is required must be completed.

(3) An EIS, if determined necessary, must be completed and circulated prior to the decision to proceed from the detailed planning stage to implementation.

§ 907.7 Determination of requirement for EIS.

Determining whether to prepare an environmental impact statement is the first step in applying the NEPA process. In deciding whether to prepare an environmental impact statement, the responsible Corporation official will determine whether the proposal is one that:

(a) Normally requires an environmental impact statement.

(b) Normally does not require either an environmental impact statement or an environmental assessment (categorical exclusion).

(c) Normally requires an environmental assessment, but not necessarily an environmental impact statement.

§ 907.8 Actions that normally require an EIS.

PADC shall perform or have performed an environmental assessment to determine if a proposal requires an environmental impact statement. However, it may be readily apparent that a proposed action will have a significant impact on the environment; in such cases, an environmental assessment is not required and PADC will immediately begin to prepare or have prepared the environmental impact statement. To assist in determining if a proposal or action normally requires the preparation of an environmental impact statement, the following criteria and categories of action are provided.

(a) *Criteria*. Criteria used to determine whether or not actions or proposals may significantly affect the environment and therefore require an environmental impact statement are described in 40 CFR 1508.27 of the CEQ Regulations and as follows:

(1) Buildings or facades designated for retention in the Plan will be adversely affected by the proposal or action.

(2) Traffic generated by the proposal or action would represent a substantial increase over the traffic projections assessed in the Final EIS in the average daily traffic volume on avenues and streets within the Development Area or its environs;

(3) Air quality in the Development Area and its environs would be substantially affected by the proposal or action based upon the District of Columbia's adopted standard for hydrocarbons and carbon monoxide;

(4) Solid waste disposal generated by a project of the Corporation or of a developer who is constructing, reconstructing, or rehabilitating that project, would have an adverse effect on the capacity of the relevant solid waste disposal facility and compliance with ''Solid Waste Management Guidelines'' of the U.S. Environmental Protection Agency and related local and regional controls;

(5) Public utilities have insufficient capacity to provide reliable service to a project within the Development Area; and

(6) A project will be inconsistent with major elements of the Zoning Regulations of the District of Columbia as they are applicable to the Development Area.

(b) *Categories of action*. The following categories of action normally require an environmental impact statement:

(1) Amendments or supplements to the Plan that constitute a ''substantial change'' to the Plan as defined in 40 U.S.C. 874(c) of the Act.

(2) Acquisition or disposal of real property by the Corporation *not* related to any specific decision, plan, or program adopted by the Board of Directors of the Corporation for which an environmental assessment or an assessment and an EIS has been prepared.

(3) Legislative proposals made to Congress.

(4) Funding and/or construction by the Corporation or its agents or representatives of any building, if that activity is not consistent with the Plan and the Final EIS.

§ 907.9 Preparation of an EIS.

(a) *Notice of intent.* When PADC decides to prepare an environmental impact statement, it shall publish a notice of intent in the FEDERAL REGISTER in accordance with 40 CFR 1501.7 and 1508.22 of the CEQ Regulations.

(b) *Preparation.* After determining that an environmental impact statement will be prepared and publishing the notice of intent, PADC will begin to prepare or have prepared the environmental impact statement. Procedures for preparing the environmental impact statement are set forth in 40 CFR part 1502, CEQ Regulations.

(c) *Supplemental environmental impact statements.* PADC may supplement a draft or final environmental impact statement at any time. PADC shall prepare a supplement to either the draft or final environmental impact statement when (1) substantial changes are proposed to an action contained in the draft or final EIS that are relevant to environmental concerns or there are significant new circumstances or information relevant to environmental concerns and bearing on the proposed action or its impacts; or (2) actions are proposed which relate or are similar to other action(s) taken or proposed and that together will have a cumulatively significantly impact on the environment.

§ 907.10 Categorical exclusion.

The CEQ Regulations provide for the categorical exclusion (40 CFR 1508.4) of actions that do not individually or cumulatively have a significant effect on the human environment. Therefore, neither an environmental assessment nor an environmental impact statement is required for such actions.

(a) *Criteria.* Criteria used to determine those categories of action that normally do not require either an environmental impact statement or an environmental assessment include:

(1) The action or proposal is consistent with the Plan or the Act, and the environmental effects have been previously analyzed in the Final EIS, a supplement thereto, or in an environmental assessment or an EIS previously prepared; or

(2) The total estimated cost directly attributable to the action or proposal does not exceed $500,000; or

(3) The action or proposal is related solely to internal administrative operations of the Corporation.

(b) *List of categorical exclusions.* Categories of action, identified in appendix A (attached) have been determined by PADC to have no significant effect on the human environment and are therefore categorically excluded from the preparation of environmental impact statements and environmental assessments.

(c) *Changes to the list of categorical exclusion.* (1) The PADC List of Categorical Exclusion will be continually reviewed and refined as additional categories are identified and as experience is gained in the categorical exclusion process.

(2) Additional categories of exclusion identified will be submitted to the Chairman of the Board of Directors for review and approval, and for amendments to this part, following public comment and review by the Council on Environmental Quality.

§ 907.11 Actions that normally require an environmental assessment.

If a proposal or action is not one that normally requires an environmental impact statement, and does not qualify for categorical exclusion, PADC will prepare or have prepared an environmental assessment.

(a) *Criteria.* Criteria used to determine those categories of action that normally require an environmental assessment, but not necessarily an environmental impact statement, include:

(1) Potential for minor degradation of environmental quality;

(2) Potential for cumulative impact on environmental quality; and

(3) Potential for impact on protected resources.

(b) *Categories of action.* The following categories of action normally require

the preparation of an environmental assessment.

(1) Amendments to the Plan that do not constitute a ''substantial change'' to the Plan.

(2) Regulations promulgated by the Corporation that have significant environmental impact on the public or persons residing in the development area including businesses.

(3) Development proposals submitted to the Corporation by private developers that are consistent with the Plan and General Guidelines prepared by the Corporation.

(4) Activities related to the Public Improvements Program of the Corporation for which no previous environmental assessment or EIS has been prepared.

(5) Contracts, work authorizations, and master agreements related to and implementing programs, policies, and proposals not categorically excluded and for which no environmental assessments or for which no environmental assessment and EIS have been previously prepared.

(6) Street closures and other rearrangements of public space which were not covered in the Plan or the Final EIS.

(7) Acquisition/disposal of personal property by the Corporation not related to any specific decision, plan, or program adopted by the Board of Directors of the Corporation for which an environmental assessment or an environmental assessment and an EIS is required to be prepared.

(8) Proposed construction of any public building within the development area by any executive agency of the United States Government, any agency or department of the District of Columbia Government, or any other public or quasi-public entity.

§ 907.12 Preparation of an environmental assessment.

(a) *When to prepare.* PADC will begin the preparation of an environmental assessment as early as possible after it is determined by the responsible corporation official to be required. PADC may prepare an environmental assessment at any time to assist planning and decision-making.

(b) *Content and format.* An environmental assessment is a concise public document used to determine whether to prepare an environmental impact statement. An environmental assessment aids in complying with the Act when no environmental impact statement is necessary, and it facilitates the preparation of an environmental impact statement, if one is necessary. The environmental assessment shall contain brief discussions of the following topics:

(1) Purpose and need for the proposed action.

(2) Description of the proposed action.

(3) Alternatives considered, including the No Action alternative.

(4) Environmental effects of the proposed action and alternative actions.

(5) Listing of agencies, organizations or persons consulted.

(6) In preparation of the environmental assessment, the most important or significant environmental consequences and effects on the areas listed below should be addressed. Only those areas which are specifically relevant to the particular proposal should be addressed. Those areas should be addressed in as much detail as is necessary to allow an analysis of the alternatives and the proposal. The areas to be considered are the following:

(i) Natural/ecological features (such as floodplain, wetlands, coastal zones, wildlife refuges, and endangered species);

(ii) Air quality;

(iii) Sound levels;

(iv) Water supply, wastewater treatment and water runoff;

(v) Energy requirements and conservation;

(vi) Solid waste;

(vii) Transportation;

(viii) Community facilities and services;

(ix) Social and economic;

(x) Historic and aesthetic; and

(xi) Other relevant factors.

(c) *Finding of no significant impact.* If PADC completes an environmental assessment and determines that an environmental impact statement is not required, then PADC shall prepare a finding of no significant impact. The finding of no significant impact shall be

made available to the public by PADC as specified in 40 CFR 1506.6 of the CEQ Regulations.

§ 907.13 Public involvement.

Interested persons may obtain information concerning any pending EIS or any other element of the environmental review process of the Corporation by contacting the Public Information Officer of the Corporation, 1331 Pennsylvania Avenue, NW, Suite 1220 North, Washington, DC 20004, telephone (202) 566–1218.

[47 FR 8768, Mar. 2, 1982, as amended at 50 FR 45824, Nov. 4, 1985]

§ 907.14 Corporation decision making procedures.

To ensure that at major decision making points all relevant environmental concerns are considered by the Decision Maker, the following procedures are established.

(a) An environmental document, i.e., the EIS, Environmental Assessment, Finding of No Signficant Impact, or Notice of Intent, in addition to being prepared at the earliest point in the decision making process, shall accompany the relevant proposal or action through the Corporation's decision making process to ensure adequate consideration of environmental factors.

(b) The decision maker shall consider in its decision making process only those decision alternatives discussed in the relevant environmental documents. Also, where an EIS has been prepared, the decision maker shall consider all alternatives described in the EIS. A written record of the consideration of alternatives during the decision making process shall be maintained.

(c) Any environmental document prepared for a proposal or action shall be made part of the record of any formal rulemaking by the Corporation.

§ 907.15 Approval of private development proposals.

(a) Each development proposal submitted by a private developer to the Corporation for its approval, unless categorically excluded, shall require, at a minimum, an environmental assessment.

(b) The Board of Directors may not take any approval action on a submitted development proposal of a private developer until such time as the appropriate environmental review has been prepared and submitted to the Board of Directors.

(c) At a minimum, and as part of any submission made by a private developer to the Board of Directors for its approval, a private developer shall make available data and materials concerning the development proposal sufficient to permit the Corporation to carry out its responsibilities on environmental review. When requested, the developer shall provide additional information that the Corporation believes is necessary to permit it to satisfy its environmental review functions.

(d) As part of a development proposal submission, a private developer may submit an environmental assessment on its development proposal.

(e) Where the responsible Corporation official determines that the preparation of an EIS is required, the EIS shall be prepared in accordance with part 1502 of the CEQ Regulations. The responsible Corporation official may set time limits for environmental review appropriate to each development proposal, consistent with CEQ Regulations 40 CFR 1601.8 and 1506.10.

(f) The responsible Corporation official shall at the earliest possible time ensure that the Corporation commences its environmental review on a proposed development project and shall provide to a private developer any policies or information deemed appropriate in order to permit effective and timely review by the Corporation of a development proposal once it is submitted to the Board of Directors for approval. The official shall designate, for the benefit of the developer, staff members of the Corporation to advise the developer with regard to information that may be required in order to accomplish the Corporation's environmental review.

§ 907.16 Actions where lead Agency designation is necessary.

(a) Consistent with CEQ Regulations, § 1501.5, where a proposed action by the Corporation involves one or more other

Federal agencies, or where a group of actions by the Corporation and one or more other Federal agencies are directly related to each other because of their functional interdependence or geographical proximity, the Corporation will seek designation as lead agency for those actions that directly relate to implementation of the Plan and those actions that relate solely to the Development Area.

(b) For an action that qualifies as one for which the Corporation will seek designation as lead agency, the Corporation will promptly consult with the appropriate Federal agencies such as the National Capital Planning Commission, the Department of the Interior, and the General Services Administration to establish lead agency and cooperating agency designations.

APPENDIX A TO PART 907

(a) Specific Corporation actions categorically excluded from the requirements for environmental assessment and an EIS are:

(i) Personnel actions;

(ii) Administrative actions and operations directly related to the operation of the Corporation (e.g., purchase of furnishings, services, and space acquisition for the Corporation offices);

(iii) Property management actions related to routine maintenance, operation, upkeep, etc., of real property owned by the Corporation;

(iv) Review of permit applications relating to minor development activities in the Development Area (sign approval, interior renovations, minor exterior changes to facade, etc.);

(v) Promulgation of development general and square guidelines that implement the Plan as covered by the Final EIS;

(vi) Contracts, work authorizations, procurement actions directly related to and implementing proposals, programs, and master agreements for which an environmental assessment or an environmental assessment and an EIS have been prepared, or which are related to administrative operation of the agency;

(vii) Acquisition/disposal by lease, easement, or sale of real and personal property owned by the Corporation subsequent to and implementing a prior decision of the Board of Directors for which an environmental assessment or an assessment and an EIS were prepared;

(viii) Activities directly related to and implementing the Public Improvements Program of the Corporation approved by the Board of Directors, and which are covered by a previously prepared environmental assessment or an environmental assessment and an EIS;

(ix) Demolition actions preparatory for development by the Corporation, other public agencies, or private developers subsequent to approval of development proposals made by the Board of Directors;

(x) Development proposal identical to the requirements of the Plan and which was included in an EIS previously prepared.

(b) An action which falls into one of the above categories may still require the preparation of an EIS or environmental assessment if the designated corporation official determines it meets the criteria stated in §907.8(a) or involves extraordinary circumstances that may have a significant environmental effect.

PART 908—POLICY AND PROCEDURES TO FACILITATE THE RETENTION OF DISPLACED BUSINESSES AND RESIDENTS IN THE PENNSYLVANIA AVENUE DEVELOPMENT AREA

Subpart A—General

Sec.
908.1 Policy.
908.2 Purpose.
908.3 Definitions.

Subpart B—Preferential Right To Relocate

908.10 Criteria of Qualified Persons.
908.11 List of Qualified Persons.
908.12 Retention on the List of Qualified Persons.
908.13 Rights of Qualified Persons.
908.14 Requirements placed on developers that have acquired or leased real property from the Corporation.
908.15 Requirements placed on developers that have not acquired or leased real property from the Corporation.

Subpart C [Reserved]

Subpart D—Review Procedure

908.30 Request for review.
908.31 Time for filing request for review.
908.32 Review procedures.
908.33 Final determination.

AUTHORITY: 40 U.S.C. 874(e); 40 U.S.C. 875(8); 40 U.S.C. 877(d).

SOURCE: 48 FR 55459, Dec. 13, 1983, unless otherwise noted.

Subpart A—General

§ 908.1 Policy.

One of the goals of The Pennsylvania Avenue Plan—1974, as amended, (*The Plan*) is the reduction of hardships experienced by businesses and residents within the development area of the Pennsylvania Avenue Development Corporation (*the Corporation*) when they are displaced as a result of implementation of The Plan. It is the policy of the Corporation to provide displaced businesses and residents with a preferential opportunity to relocate within the development area so that they may share in the benefits brought to the area by the implementation of The Plan. This rule shall not be construed to affect the eligibility, rights or responsibilities of persons who may be entitled to benefits provided under the Uniform Relocation Assistance and Real Property Acquisition Policies Act of 1970 as implemented by the Corporation (36 CFR part 904).

§ 908.2 Purpose.

The purpose of this rule is to:

(a) Provide a meaningful opportunity to businesses displaced by the Corporation's program to return to, or remain in, the Development Area;

(b) Establish procedures and requirements for displaced occupants by which they may establish and later exercise their preferential right to return to the Development Area;

(c) Establish procedures which the Corporation and private Developers must follow in providing Qualified Persons with the opportunity to obtain their preferential right to return to the Development Area.

§ 908.3 Definitions.

The following definitions shall apply to this part:

(a) *Developer* means a Person or team of Persons that has received preliminary approval for a development proposal or has been designated by the Corporation as Developer pursuant to a development competition.

(b) *Development Area* means the area described in section 2 (f) of Pub. L. 92–578, October 27, 1972, as amended (40 U.S.C. 871 (f)), and for which the Plan has been prepared and will be implemented by the Corporation.

(c) *List* means the List of Qualified Persons maintained by the Corporation as provided in § 908.11(a) of this rule.

(d) *Newly developed space* means any leaseable part of a new building in the Development Area upon which construction was commenced after October 27, 1972 or an existing building in the Development Area which after October 27, 1972 underwent substantial remodeling, renovation, conversion, rebuilding, enlargement, extension or major structural improvement, but not including ordinary maintenance or remodeling or changes necessary to continue occupancy.

(e) *Person* means a partnership, company, corporation, or association as well as an individual or family, but does not include a department, agency, or instrumentality of any Federal, state, or local government.

(f) *Previous location* means the space from which the Eligible Person was or is being displaced as a result of the Corporation's or Developer's acquisition of real property, or as a result of receiving a written order to vacate from the Corporation.

Subpart B—Preferential Right To Relocate

§ 908.10 Criteria of Qualified Person.

Qualified Person is either

(a) A Person whose place of business or residence was located in the Development Area and was displaced from its location by:

(1) The Corporation in connection with the acquisition of fee title, or a lesser interest, in the real property containing such business or residence; or

(2) A Developer in implementing a development project in accordance with the Plan; or

(b) A Person whose place of business or residence is located in the Development Area and who has received notice of initiation of negotiations by the Corporation for purchase of the real property containing such business or residence.

§ 908.11 List of Qualified Persons.

(a) The Corporation shall develop and maintain a List of Qualified Persons who meet the criteria of Qualified Person as defined in § 908.10 and who ask to be placed on that list.

(b) The Corporation shall notify each occupant displaced by development provided an address is available to the Corporation, of this policy and the procedures to be followed for placement on the List.

(c) A person who wishes to be included on the List shall notify the Corporation in writing to that effect. The notice to the Corporation shall include:

(1) The address of the Previous Location;

(2) A short statement indicating the nature of the Qualified Person's occupancy;

(3) The amounts and type of space occupied prior to displacement;

(4) A description of any specialized equipment or unusual requirements for occupancy; and

(5) A copy of the notice to vacate from the Developer or notice of initiation of negotiations from the Corporation if either of these was received by the Qualified Person.

(d) The Corporation shall:

(1) Review the information furnished by the Person including any notice;

(2) Request additional information, if necessary to make a determination of the Person's qualifications;

(3) Determine whether the Person is qualified to be listed, and if so place the Person on the list; and

(4) Notify the Person of its determination.

(e) The Corporation urges that any Person who wishes to be placed on the List request such placement as soon as the Person meets the criteria for Qualified Person established in § 908.10, and all Persons are encouraged to do so no later than one year of the time the Person is displaced in order to increase the opportunity to obtain Newly Developed Space. However, no Person shall be denied placement on the List because such placement was not requested within one year of displacement.

§ 908.12 Retention on the List of Qualified Persons.

(a) Once placed on the List, the Corporation shall keep a Person on the List until:

(1) The Corporation receives a written request from the Qualified Person to be removed from the List;

(2) The Qualified Person is relocated into or has a binding lease commitment for Newly Developed Space;

(3) The Qualified Person sells, transfers, or merges its interest in the displaced business, unless after such change in ownership Qualified Persons have at least fifty-one percent of the interest in the resulting business; or

(4) The Corporation receives a mailing returned from the Post Office that the Person is not located at the known address and left no forwarding address, provided that the Corporation shall reinstate any such removed name if the Person provides the Corporation with a current address; or

(5) The Corporation ceases operations upon completion of the Plan.

(b) A Qualified person relocated into newly developed space, may only again be placed on the List:

(1) If another branch of its business is subsequently displaced from space within the Development Area which is not Newly Developed Space; and

(2) If all requirements of § 908.10 of the rule are met with regard to the subsequent displacement.

§ 908.13 Rights of Qualified Persons.

(a) As provided in §§ 908.14(c) and 908.15(b), each Qualified Person on the List shall receive notices of opportunities to occupy Newly Developed Space as opportunities become available.

(b) As provided in §§ 908.14(d) and 908.15(c), each Qualified Person on the List shall be notified of any subsequent changes in the leasing plan which are, in the Corporation's opinion, major.

(c) Each Qualified Person on the List, who is interested in negotiating for occupancy of Newly Developed Space shall, within two weeks after receiving notice of a tenanting opportunity, provide written notice of its interest in the tenanting opportunity to the Developer, and furnish a copy of the written notice to the Corporation.

(d) Each Qualified Person on the List who provides a written notice of interest shall have ninety days following the Developer's receipt of the notice of interest for exclusive negotiations with the Developer for occupancy of the Developer's Newly Developed Space. During the ninety day period the Developer, subject to §§ 908.14 and 908.15 of this rule, shall not negotiate tenanting opportunities for the same Newly Developed Space requested by the Qualified Person with other than Qualified Persons.

(e) A Qualified Person's opportunity to occupy Newly Developed Space shall not be limited to the square on which its previous location was situated but extends throughout the Development Area. Similarly, no Qualified Person has an absolute right to return to the square where previous location was situated.

(f) A Qualified Person's opportunity to occupy space may be exercised in the Development Area at any time during the Corporation's existence, but such opportunity may only be exercised within Newly Developed Space.

(g) A Qualified Person has one opportunity to occupy Newly Developed Space for each location in the Development Area from which it is displaced.

(h) The Corporation cannot assure any Qualified Person that it will be relocated to Newly Developed Space.

§ 908.14 Requirements placed on developers that have acquired or leased real property from the Corporation.

Developers who have acquired or leased real property from the Corporation shall:

(a) Notify the Corporation, within six months of the approval of the Developer's building permit, of its leasing plan and when it intends to begin seeking tenants. The Developer shall include at least the following in its leasing plan:

(1) The mix of uses and estimated square footage for each use;

(2) The rentals to be charged by type of use and location;

(3) The terms and conditions to be included in the leases, including financial participation;

(4) The selection criteria to be used by either the Developer or its agents; and

(5) The projected completion and occupancy dates.

(b) Notify the Corporation of any changes in the Developer's leasing plan.

(c) Send registered letters to all Qualified Persons on the List notifying them that the developer is seeking tenants and advising them that they have two weeks to provide the developer with written notice of their interest and ninety days thereafter for exclusive negotiations. This letter shall include a description of the mix of uses in the project, the rentals to be charged by type of use and location, the terms and conditions to be included in leases, the projected completion and occupancy dates, and the selection criteria to be used to choose tenants. The Developer will furnish the Corporation with an enumeration of the Qualified Persons it has notified and a copy of the letter and any attachments sent.

(d) Notify in writing each Qualified Person whom the Developer has previously contacted of changes in the Developer's leasing plan which the Corporation determines are major.

(e) Provide a ninety day period for exclusive negotiations with Qualified Persons, said period to commence with the timely receipt by the Developer of the written notice of interest from the Qualified Person. During this period the Developers shall:

(1) Negotiate tenanting opportunities only with Qualified Persons who have notified the Developer of their interest in the opportunity;

(2) Not seek other potential tenants or negotiate agreements to occupy the Newly Developed Space requested by Qualified Persons with anyone other than those Qualified Persons who have timely notified the Developer of their interest in the opportunity, except that a Developer may negotiate agreements with equity partners in the project who will become tenants or with prime tenants; and

(3) Negotiate in good faith with interested Qualified Persons and seek to accommodate them as tenants.

(f) Report to the Corporation at the conclusion of the ninety day period of

exclusive negotiations concerning the results of its efforts. In particular the developer shall:

(1) State the number of responses which it received from Qualified Persons;

(2) State the number of Qualified Persons with whom it has reached agreement and the name of each;

(3) State the number of Qualified Persons with whom it is still negotiating and the name of each; and

(4) Describe the Developer's negotiations with each Qualified Person including a summary of each communication between the Developer and each Qualified Person with whom agreement has not been reached, the Developer's best offer to each Qualified Person, the best offer of each Qualified Person to the Developer, and the specific reasons why any Qualified Persons did not meet the selection criteria.

(g) Report to the Corporation quarterly thereafter until the project is fully leased or there are no more Qualified Persons interested in leasing space, whichever first occurs, concerning the results of its nogotiations with Qualified Persons. In particular the Developer shall state:

(1) The number of Qualified Persons with whom it has reached agreement and the name of each;

(2) The percentage of square feet of total leasable space which it has leased to Qualified Persons; and

(3) A description of the Developer's negotiations with each Qualified Person including a summary of each communication between the Developer and each Qualified Person with whom agreement has not been reached, the Developer's best offer to each Qualified Person, the best offer of each Qualified Person to the Developer, and the specific reason why the Developer determines any Qualified Person did not meet its selection criteria.

§ 908.15 Requirements placed on developers that have not acquired or leased real property from the Corporation.

The Corporation shall encourage Developers that do not acquire or lease real property from the Corporation to lease to Qualified Persons.

(a) While reviewing the Developer's preliminary or final plans, the Corporation shall explore the tenanting opportunities proposed by the Developer and furnish the Developer with the List.

(b) The Corporation shall notify those Qualified Persons on the List who appear to be prospective tenants for the available tenanting opportunities of this tenanting opportunity. To the extent that such information is available to the Corporation, these notices shall specify the mix of uses in the project, the rentals to be charged by type of use and location, the terms and conditions to be included in the leases, the projected completion and occupancy dates and the selection criteria to be used in choosing tenants.

(c) The Corporation shall notify in writing each Qualified Person whom it has previously contacted of changes in the Developer's plan provided the Corporation is informed of the changes and determines the changes are major.

(d) The Corporation shall request that the Developer make every effort to lease space to Persons on the List and to report to the Corporation the names of those Qualified Persons who have reached an agreement with the Developer.

Subpart C [Reserved]

Subpart D—Review Procedure

§ 908.30 Request for review.

(a) Any Person aggrieved by a determination concerning placement or retention on the List or any other right under subpart B of this rule, may request that the determination be reviewed.

(b) The applicant's request for review, shall be in writing, shall state the reasons for requesting review, and shall describe the relief sought (including all information the aggrieved person believes to be relevant). The applicant's written request shall be sent to the Director of Real Estate, Pennsylvania Avenue Development Corporation, 1331 Pennsylvania Avenue, NW., Suite 1220 North, Washington, DC 20004.

[48 FR 55459, Dec. 13, 1983, as amended at 50 FR 45824, Nov. 4, 1985]

§ 908.31 Time for filing request for review.

Any person who files a request for review must do so within one year of the date of the determination for which review is sought.

§ 908.32 Review procedures.

(a) Upon receipt of a request for review, the Director of Real Estate shall compile all pertinent records maintained on the aggrieved person's application, including the following:

(1) Information on which the original determination was based, including applicable regulations;

(2) Information submitted by the applicant including the request for review and any information submitted in support of the application;

(3) Any additional information the Director of Real Estate considers relevant to a full and fair review of the application and which he obtains by request, investigation or research.

(b) The Director of Real Estate shall submit the complete file together with a summary of the facts and issues involved in the application to the Chairman of the Board of Directors of the Corporation or his or her designee (*Chairman or designee*) within 30 days of receipt of the request for review.

(c) The Chairman may either review the application or designate one or more persons from the Board of Directors or from outside the Corporation to review the claim. During review the Chairman or designee(s) may consult with the Corporation's Office of General Counsel to obtain advice on legal issues arising from the claim.

§ 908.33 Final determination.

(a) The Chairman or designee(s) shall make a final determination on the claim within 45 days of receipt of the file from the Director of Real Estate. The final determination shall be in the form of Findings of Fact and Conclusions of Law and shall be sent to the aggrieved person and to the Director of Real Estate.

(b) If the applicant is determined to have been aggrieved, the Director of Real Estate shall promptly take appropriate action in accordance with the final determination.

(c) A notice of the right to judicial review shall be sent to the aggrieved person with the final determination.

PART 909—ENFORCEMENT OF NONDISCRIMINATION ON THE BASIS OF HANDICAP IN PROGRAMS OR ACTIVITIES CONDUCTED BY THE PENNSYLVANIA AVENUE DEVELOPMENT CORPORATION

Sec.

909.101 Purpose.
909.102 Application.
909.103 Definitions.
909.104–909.109 [Reserved]
909.110 Self-evaluation.
909.111 Notice.
909.112–909.129 [Reserved]
909.130 General prohibitions against discrimination.
909.131–909.139 [Reserved]
909.140 Employment.
909.141–909.148 [Reserved]
909.149 Program accessibility: Discrimination prohibited.
909.150 Program accessibility: Existing facilities.
909.151 Program accessibility: New construction and alterations.
909.152–909.159 [Reserved]
909.160 Communications.
909.161–909.169 [Reserved]
909.170 Compliance procedures.
909.171–909.999 [Reserved]

AUTHORITY: 29 U.S.C. 794.

SOURCE: 51 FR 22896, June 23, 1986, unless otherwise noted.

§ 909.101 Purpose.

This part effectuates section 119 of the Rehabilitation, Comprehensive Services, and Developmental Disabilities Amendments of 1978, which amended section 504 of the Rehabilitation Act of 1973 to prohibit discrimination on the basis of handicap in programs or activities conducted by Executive agencies or the United States Postal Service.

§ 909.102 Application.

This part applies to all programs or activities conducted by the agency.

§ 909.103 Definitions.

For purposes of this part, the term—

Assistant Attorney General means the Assistant Attorney General, Civil

Rights Division, United States Department of Justice.

Auxiliary aids means services or devices that enable persons with impaired sensory, manual, or speaking skills to have an equal opportunity to participate in, and enjoy the benefits of, programs or activities conducted by the agency. For example, auxiliary aids useful for persons with impaired vision include readers, brailled materials, audio recordings, telecommunications devices and other similar services and devices. Auxiliary aids useful for persons with impaired hearing include telephone handset amplifiers, telephones compatible with hearing aids, telecommunication devices for deaf persons (TDD's), interpreters, notetakers, written materials, and other similar services and devices.

Complete complaint means a written statement that contains the complainant's name and address and describes the agency's alleged discriminatory action in sufficient detail to inform the agency of the nature and date of the alleged violation of section 504. It shall be signed by the complainant or by someone authorized to do so on his or her behalf. Complaints filed on behalf of classes or third parties shall describe or identify (by name, if possible) the alleged victims of discrimination.

Facility means all or any portion of buildings, structures, equipment, roads, walks, parking lots, rolling stock or other conveyances, or other real or personal property.

Handicapped person means any person who has a physical or mental impairment that substantially limits one or more major life activities, has a record of such an impairment, or is regarded as having such an impairment.

As used in this definition, the phrase:

(1) *Physical or mental impairment* includes—

(i) Any physiological disorder or condition, cosmetic disfigurement, or anatomical loss affecting one or more of the following body systems: Neurological; musculoskeletal; special sense organs; respiratory, including speech organs; cardiovascular; reproductive; digestive; genitourinary; hemic and lymphatic; skin; and endocrine; or

(ii) Any mental or psychological disorder, such as mental retardation, organic brain syndrome, emotional or mental illness, and specific learning disabilities. The term *physical or mental impairment* includes, but is not limited to, such diseases and conditions as orthopedic, visual, speech, and hearing impairments, cerebral palsy, epilepsy, muscular dystrophy, multiple sclerosis, cancer, heart disease, diabetes, mental retardation, emotional illness, and drug addiction and alocoholism.

(2) *Major life activities* includes functions such as caring for one's self, performing manual tasks, walking, seeing, hearing, speaking, breathing, learning, and working.

(3) *Has a record of such an impairment* means has a history of, or has been misclassified as having, a mental or physical impairment that substantially limits one or more major life activities.

(4) *Is regarded as having an impairment* means—

(i) Has a physical or mental impairment that does not substantially limit major life activities but is treated by the agency as constituting such a limitation;

(ii) Has a physical or mental impairment that substantially limits major life activities only as a result of the attitudes of others toward such impairment; or

(iii) Has none of the impairments defined in paragraph (1) of this definition but is treated by the agency as having such an impairment.

Historic preservation programs means programs conducted by the agency that have preservation of historic properties as a primary purpose.

Historic properties means those properties that are listed or eligible for listing in the National Register of Historic Places or properties designated as historic under a statute of the appropriate State or local government body.

Qualified handicapped person means—

(1) With respect to preschool, elementary, or secondary education services provided by the agency, a handicapped person who is a member of a class of persons otherwise entitled by statute, regulation, or agency policy to receive education services from the agency.

(2) With respect to any other agency program or activity under which a person is required to perform services or

to achieve a level of accomplishment, a handicapped person who meets the essential eligibility requirements and who can acheive the purpose of the program or activity without modifications in the program or activity that the agency can demonstrate would result in a fundamental alteration in its nature;

(3) With respect to any other program or activity, a handicapped person who meets the essential eligibility requirements for participation in, or receipt of benefits from, that program or activity; and

(4) *Qualified handicapped person* is defined for purposes of employment in 29 CFR 1613.702(f), which is made applicable to this part by § 909.140.

Section 504 means section 504 of the Rehabilitation Act of 1973 (Pub. L. 93–112, 87 Stat. 394 (29 U.S.C. 794)), as amended by the Rehabilitation Act Amendments of 1974 (Pub. L. 93–516, 88 Stat. 1617), and the Rehabilitation, Comprehensive Services, and Developmental Disabilities Amendments of 1978 (Pub. L. 95–602, 92 Stat. 2955). As used in this part, section 504 applies only to programs or activities conducted by Executive agencies and not to federally assisted programs.

Substantial impairment means a significant loss of the integrity of finished materials, design quality, or special character resulting from a permanent alteration.

§§ 909.104–909.109 [Reserved]

§ 909.110 Self-evaluation.

(a) The agency shall, by August 24, 1987, evaluate its current policies and practices, and the effects thereof, that do not or may not meet the requirements of this part, and, to the extent modification of any such policies and practices is required, the agency shall proceed to make the necessary modifications.

(b) The agency shall provide an opportunity to interested persons, including handicapped persons or organizations representing handicapped persons, to participate in the self-evaluation process by submitting comments (both oral and written).

(c) The agency shall, until three years following the completion of the self-evaluation, maintain on file and make available for public inspection:

(1) A description of areas examined and any problems identified, and

(2) A description of any modifications made.

§ 909.111 Notice.

The agency shall make available to employees, applicants, participants, beneficiaries, and other interested persons such information regarding the provisions of this part and its applicability to the programs or activities conducted by the agency, and make such information available to them in such manner as the head of the agency finds necessary to apprise such persons of the protections against discrimination assured them by section 504 and this regulation.

§§ 909.112–909.129 [Reserved]

§ 909.130 General prohibitions against discrimination.

(a) No qualified handicapped person shall, on the basis of handicap, be excluded from participation in, be denied the benefits of, or otherwise be subjected to discrimination under any program or activity conducted by the agency.

(b)(1) The agency, in providing any aid, benefit, or service, may not, directly or through contractual, licensing, or other arrangements, on the basis of handicap—

(i) Deny a qualified handicapped person the opportunity to participate in or benefit from the aid, benefit, or service;

(ii) Afford a qualified handicapped person an opportunity to participate in or benefit from the aid, benefit, or service that is not equal to that afforded others;

(iii) Provide a qualified handicapped person with an aid, benefit, or service that is not as effective in affording equal opportunity to obtain the same result, to gain the same benefit, or to reach the same level of achievement as that provided to others;

(iv) Provide different or separate aid, benefits, or services to handicapped persons or to any class of handicapped persons than is provided to others unless such action is necessary to provide

qualified handicapped persons with aid, benefits, or services that are as effective as those provided to others;

(v) Deny a qualified handicapped person the opportunity to participate as a member of planning or advisory boards; or

(vi) Otherwise limit a qualified handicapped person in the enjoyment of any right, privilege, advantage, or opportunity enjoyed by others receiving the aid, benefit, or service.

(2) The agency may not deny a qualified handicapped person the opportunity to participate in programs or activities that are not separate or different, despite the existence of permissibly separate or different programs or activities.

(3) The agency may not, directly or through contractual or other arrangments, utilize criteria or methods of administration the purpose or effect of which would—

(i) Subject qualified handicapped persons to discrimination on the basis of handicap; or

(ii) Defeat or substantially impair accomplishment of the objectives of a program or activity with respect to handicapped persons.

(4) The agency may not, in determining the site or location of a facility, make selections the purpose or effect of which would—

(i) Exclude handicapped persons from, deny them the benefits of, or otherwise subject them to discrimination under any program or activity conducted by the agency; or

(ii) Defeat or substantially impair the accomplishment of the objectives of a program or activity with respect to handicapped persons.

(5) The agency, in the selection of procurement contractors, may not use criteria that subject qualified handicapped persons to discrimination on the basis of handicap.

(6) The agency may not administer a licensing or certification program in a manner that subjects qualified handicapped persons to discrimination on the basis of handicap, nor may the agency establish requirements for the programs or activites of licensees or certified entities that subject qualified handicapped persons to discrimination on the basis of handicap. However, the programs or activities of entities that are licensed or certified by the agency are not, themselves, covered by this part.

(c) The exclusion of nonhandicapped persons from the benefits of a program limited by Federal statute or Executive order to handicapped persons or the exclusion of a specific class of handicapped persons from a program limited by Federal statute or Executive order to a different class of handicapped persons is not prohibited by this part.

(d) The agency shall administer programs and activities in the most integrated setting appropriate to the needs of qualified handicapped persons.

§§ 909.131–909.139 [Reserved]

§ 909.140 Employment.

No qualified handicapped person shall, on the basis of handicap, be subjected to discrimination in employment under any program or activity conducted by the agency. The definitions, requirements, and procedures of section 501 of the Rehabilitation Act of 1973 (29 U.S.C. 791), as established by the Equal Employment Opportunity Commission in 29 CFR part 1613, shall apply to employment in federally conducted programs or activities.

§§ 909.141–909.148 [Reserved]

§ 909.149 Program accessibility: Discrimination prohibited.

Except as otherwise provided in § 909.150, no qualified handicapped person shall, because the agency's facilities are inaccessible to or unusable by handicapped persons, be denied the benefits of, be excluded from participation in, or otherwise be subjected to discrimination under any program or activity conducted by the agency.

§ 909.150 Program accessibility: Existing facilities.

(a) *General.* The agency shall operate each program or activity so that the program or activity, when viewed in its entirety, is readily accessible to and usable by handicapped persons. This paragraph does not—

(1) Necessarily require the agency to make each of its existing facilities accessible to and usable by handicapped persons;

(2) In the case of historic preservation programs, require the agency to take any action that would result in a substantial impairment of significant historic features of an historic property; or

(3) Require the agency to take any action that it can demonstrate would result in a fundamental alteration in the nature of a program or activity or in undue financial and administrative burdens. In those circumstances where agency personnel believe that the proposed action would fundamentally alter the program or activity or would result in undue financial and administrative burdens, the agency has the burden of proving that compliance with §909.150(a) would result in such alteration or burdens. The decision that compliance would result in such alteration or burdens must be made by the agency head or his or her designee after considering all agency resources available for use in the funding and operation of the conducted program or activity, and must be accompanied by a written statement of the reasons for reaching that conclusion. If an action would result in such an alteration or such burdens, the agency shall take any other action that would not result in such an alteration or such burdens but would nevertheless ensure that handicapped persons receive the benefits and services of the program or activity.

(b) *Methods*—(1) *General*. The agency may comply with the requirements of this section through such means as redesign of equipment, reassignment of services to accessible buildings, assignment of aides to beneficiaries, home visits, delivery of services at alternate accessible sites, alteration of existing facilities and construction of new facilities, use of accessible rolling stock, or any other methods that result in making its programs or activities readily accessible to and usable by handicapped persons. The agency is not required to make structural changes in existing facilities where other methods are effective in achieving compliance with this section. The agency, in making alterations to existing buildings, shall meet accessibility requirements to the extent compelled by the Architectural Barriers Act of 1968, as amended (42 U.S.C. 4151–4157), and any regulations implementing it. In choosing among available methods for meeting the requirements of this section, the agency shall give priority to those methods that offer programs and activities to qualified handicapped persons in the most integrated setting appropriate.

(2) *Historic preservation programs*. In meeting the requirements of §909.150(a) in historic preservation programs, the agency shall give priority to methods that provide physical access to handicapped persons. In cases where a physical alteration to an historic property is not required because of §909.150(a)(2) or (a)(3), alternative methods of achieving program accessibility include—

(i) Using audio-visual materials and devices to depict those portions of an historic property that cannot otherwise be made accessible;

(ii) Assigning persons to guide handicapped persons into or through portions of historic properties that cannot otherwise be made accessible; or

(iii) Adopting other innovative methods.

(c) *Time period for compliance*. The agency shall comply with the obligations established under this section by October 21, 1986, except that where structural changes in facilities are undertaken, such changes shall be made by August 22, 1989, but in any event as expeditiously as possible.

(d) *Transition plan*. In the event that structural changes to facilities will be undertaken to achieve program accessibility, the agency shall develop, by February 23, 1987, a transition plan setting forth the steps necessary to complete such changes. The agency shall provide an opportunity to interested persons, including handicapped persons or organizations representing handicapped persons, to participate in the development of the transition plan by submitting comments (both oral and written). A copy of the transition plan shall be made available for public inspection. The plan shall, at a minimum—

(1) Identify physical obstacles in the agency's facilities that limit the accessibility of its programs or activities to handicapped persons;

(2) Describe in detail the methods that will be used to make the facilities accessible;

(3) Specify the schedule for taking the steps necessary to achieve compliance with this section and, if the time period of the transition plan is longer than one year, identify steps that will be taken during each year of the transition period; and

(4) Indicate the official responsible for implementation of the plan.

§ 909.151 Program accessibility: New construction and alterations.

Each building or part of a building that is constructed or altered by, on behalf of, or for the use of the agency shall be designed, constructed, or altered so as to be readily accessible to and usable by handicapped persons. The definitions, requirements, and standards of the Architectural Barriers Act (42 U.S.C. 4151–4157), as established in 41 CFR 101–19.600 to 101–19.607, apply to buildings covered by this section.

§§ 909.152–909.159 [Reserved]

§ 909.160 Communications.

(a) The agency shall take appropriate steps to ensure effective communication with applicants, participants, personnel of other Federal entities, and members of the public.

(1) The agency shall furnish appropriate auxiliary aids where necessary to afford a handicapped person an equal opportunity to participate in, and enjoy the benefits of, a program or activity conducted by the agency.

(i) In determining what type of auxiliary aid is necessary, the agency shall give primary consideration to the requests of the handicapped person.

(ii) The agency need not provide individually prescribed devices, readers for personal use or study, or other devices of a personal nature.

(2) Where the agency communicates with applicants and beneficiaries by telephone, telecommunication devices for deaf person (TDD's) or equally effective telecommunication systems shall be used.

(b) The agency shall ensure that interested persons, including persons with impaired vision or hearing, can obtain information as to the existence and location of accessible services, activities, and facilities.

(c) The agency shall provide signage at a primary entrance to each of its inaccessible facilities, directing users to a location at which they can obtain information about accessible facilities. The international symbol for accessibility shall be used at each primary entrance of an accessible facility.

(d) This section does not require the agency to take any action that it can demonstrate would result in a fundamental alteration in the nature of a program or activity or in undue financial and adminstrative burdens. In those circumstances where agency personnel believe that the proposed action would fundamentally alter the program or activity or would result in undue financial and administrative burdens, the agency has the burden of proving that compliance with § 909.160 would result in such alteration or burdens. The decision that compliance would result in such alteration or burdens must be made by the agency head or his or her designee after considering all agency resources available for use in the funding and operation of the conducted program or activity, and must be accompanied by a written statement of the reasons for reaching that conclusion. If an action required to comply with this section would result in such an alteration or such burdens, the agency shall take any other action that would not result in such an alteration or such burdens but would nevertheless ensure that, to the maximum extent possible, handicapped persons receive the benefits and services of the program or activity.

§§ 909.161–909.169 [Reserved]

§ 909.170 Compliance procedures.

(a) Except as provided in paragraph (b) of this section, this section applies to all allegations of discrimination on the basis of handicap in programs or activities conducted by the agency.

(b) The agency shall process complaints alleging violations of section

504 with respect to employment according to the procedures established by the Equal Employment Opportunity Commission in 29 CFR part 1613 pursuant to section 501 of the Rehabilitation Act of 1973 (29 U.S.C. 791).

(c) The Executive Director shall be responsible for coordinating implementation of this section. Complaints may be sent to the General Counsel, Pennsylvania Avenue Development Corporaton, 1331 Pennsylvania Avenue, NW., Suite 1220 North, Washington, DC 20004–1730.

(d) The agency shall accept and investigate all complete complaints for which it has jurisdiction. All complete complaints must be filed within 180 days of the alleged act of discrimination. The agency may extend this time period for good cause.

(e) If the agency receives a complaint over which it does not have jurisdiction, it shall promptly notify the complainant and shall make reasonable efforts to refer the complaint to the appropriate government entity.

(f) The agency shall notify the Architectural and Transportation Barriers Compliance Board upon receipt of any complaint alleging that a building or facility that is subject to the Architectural Barriers Act of 1968, as amended (42 U.S.C. 4151–4157), or section 502 of the Rehabilitation Act of 1973, as amended (29 U.S.C. 792), is not readily accessible to and usable by handicapped persons.

(g) Within 180 days of the receipt of a complete complaint for which it has jurisdiction, the agency shall notify the complainant of the results of the investigation in a letter containing—

(1) Findings of fact and conclusions of law;

(2) A description of a remedy for each violation found; and

(3) A notice of the right to appeal.

(h) Appeals of the findings of fact and conclusions of law or remedies must be filed by the complainant within 90 days of receipt from the agency of the letter required by §909.170(g). The agency may extend this time for good cause.

(i) Timely appeals shall be accepted and processed by the head of the agency.

(j) The head of the agency shall notify the complainant of the results of the appeal within 60 days of the receipt of the request. If the head of the agency determines that additional information is needed from the complainant, he or she shall have 60 days from the date of receipt of the additional information to make his or her determination on the appeal.

(k) The time limits cited in paragraphs (g) and (j) of this section may be extended with the permission of the Assistant Attorney General.

(l) The agency may delegate its authority for conducting complaint investigations to other Federal agencies, except that the authority for making the final determination may not be delegated to another agency.

[51 FR 22894, 22896, June 23, 1986, as amended at 51 FR 22894, June 23, 1986]

§§ 909.171–909.999 [Reserved]

PART 910—GENERAL GUIDELINES AND UNIFORM STANDARDS FOR URBAN PLANNING AND DESIGN OF DEVELOPMENT WITHIN THE PENNSYLVANIA AVENUE DEVELOPMENT AREA

Subpart A—General

Sec.
910.1 Policy.
910.2 Purpose.
910.3 Program administration.

Subpart B—Urban Planning and Design Concerns

910.10 General.
910.11 Comprehensive urban planning and design.
910.12 Development density.
910.13 Urban design of Washington, DC.
910.14 Historic preservation.
910.15 New development design.
910.16 Land use.
910.17 Pedestrian circulation system.
910.18 Vehicular circulation and storage systems.

Subpart C—Standards Uniformly Applicable to the Development Area

910.30 General.
910.31 High architectural quality.
910.32 Historic preservation.
910.33 Off-street parking.
910.34 Accommodations for the physically handicapped.
910.35 Fine arts.

910.36 Energy conservation.
910.37 Fire and life safety.
910.38 Building exterior illumination.

Subpart D—Glossary of Terms

910.50 General.
910.51 Access.
910.52 Buildable area.
910.53 Building restriction line.
910.54 Build-to height.
910.55 Build-to line.
910.56 Coordinated planning area.
910.57 Curb-cut.
910.58 Development.
910.59 Development parcel.
910.60 Gross floor area.
910.61 Height of development.
910.62 The Plan.
910.63 Rehabilitation.
910.64 Replication.
910.65 Restoration.
910.66 Sidewalk setback.
910.67 Square guidelines.
910.68 Storefront.
910.69 Structural bay.
910.70 Vault.
910.71 Weather protection.

AUTHORITY: Sec. 6(8) Pennsylvania Avenue Development Corporation Act of 1972 (40 U.S.C. 875(8)).

SOURCE: 48 FR 36642, Aug. 23, 1982, unless otherwise noted.

Subpart A—General

§ 910.1 Policy.

(a) The Pennsylvania Avenue Development Corporation Act of 1972, Pub. L. 92–578, October 27, 1972, (the *Act*), (40 U.S.C. 871 *et seq.*) established the Pennsylvania Avenue Development Corporation (the *Corporation*) with jurisdiction over the Pennsylvania Avenue Development Area (*Development Area*). The Development Area is generally described as an area in Washington DC, bounded by Pennsylvania Avenue, NW., on the south, East Executive Drive on the west, 3rd Street, NW., on the east, and E and F Streets, NW., on the north.

(b) Prior to creation of the Corporation, the deterioration of the Development Area had an adverse impact upon the physical, economic, and social life of Washington, DC. The Corporation was created as the vehicle to develop, maintain, and use the Development Area in a manner suitable to its ceremonial, physical, and historic relationship to the legislative and executive branches of the Federal government, to the governmental buildings, monuments, memorials, and parks in and adjacent to that area, and to the downtown commercial core of Washington, DC. The Corporation was directed to prepare a development plan for the Development Area and to submit that plan to the United States Congress. Congress accepted that plan and directed its implementation by the Corporation. The Corporation through a broad range of statutory powers has begun this implementation process.

(c) The Pennsylvania Avenue Plan—1974, as amended (*the Plan*) is a blueprint for social, economic, and architectural rejuvenation of the Development Area. Its goal is to make the Development Area once again a relevant and contributing element of Washington, DC. With the implementation of *the Plan,* the Development Area will become a showpiece of the Nation's Capital, proudly displaying the successful joint efforts of the Corporation, other Federal and District of Columbia government agencies, and private entrepreneurs.

(d) *The Plan,* containing the goals and objectives for *development,* is supplemented by various adopted policies and programs of the Corporation. *The Plan,* in conjunction with these policies and programs, represents the basis upon which the *development* and rejuvenation of the Development Area will proceed, whether publicly or privately inspired and accomplished. These policies and programs amplify, elaborate, and refine the planning and urban design concepts expressed in *the Plan.*

§ 910.2 Purpose.

(a) Implementation of *the Plan* occurs through two component actions: public improvements construction and square development. Public improvements construction consists of implementation by the Corporation of the Public Improvements Program which is a comprehensive plan for the design and construction of public amenities in public spaces and selected thoroughfares within the Development Area. This program outlines the details of roadway and sidewalk improvements, public space configuration, and pedestrian amenities. Square development consists of design and construction of

development projects primarily on city blocks, known as squares, within the Development Area. These *development* projects are generally pursued by private entrepreneurs with varying degrees of participation and involvement by the Corporation, through such means as land assemblage and leasing.

(b) This part 910, together with the *Square Guidelines* applicable to the *coordinated planning area,* pertains solely to square development and specifies the controlling mechanism for implementation of *the Plan* required by Chapter Six of *the Plan.*

§910.3 Program administration.

(a) This part 910, together with *Square Guidelines,* described below, provides interested parties with the urban planning and design information sufficient to understand and participate in the process of square development within the Development Area.

(1) This part 910, General Guidelines and Uniform Standards for Urban Planning and Design of Development, sets forth the general planning and design goals and objectives which govern the implementation of *the Plan,* specifies standards which are uniformly applicable to all *developments* throughout the Development Area, and provides a glossary of defined terms applicable to this part as well as *Square Guidelines.*

(2) *Square Guidelines* specifies detailed urban planning and design requirements and recommendations which are applicable to each particular *coordinated planning area,* a *coordinated planning area* being a square, a portion of a square, or a combination of squares. These requirements and recommendations set forth intentions and refinements of *the Plan* in light of the identified Planning and Design Concerns specified in subpart B of this part 910. Each set of *Square Guidelines* is adopted by the Board of Directors, issued by the Chairman, and is available, upon request, at the Corporation's office.

(3) *Square Guidelines* are developed in the context of the existing environment. Several provisions in the *Square Guidelines* are, therefore, established on the basis of certain assumptions in terms of existing buildings, a particular traffic pattern and roadway configuration, a market condition for a particular land use, etc. In the event of a major change or casualty which would render it impossible or impracticable to meet certain requirements of *Square Guidelines,* the Corporation would expect to develop and issue up-to-date *Square Guidelines.* This statement does not, of course, preclude the Corporation from issuing amendments to *Square Guidelines* from time to time on any other basis.

(b) Pursuant to section 7(b) of the Act, each proposal for *development* within the Development Area must be submitted to the Corporation to determine its consistency with *the Plan.* The Corporation's adopted development policy, entitled ''Development Policies and Procedures,'' sets forth the process for this determination. In determining whether a *development* proposal is consistent with *the Plan,* the Corporation shall review the proposal against all adopted Corporation programs, policies, and regulations, including:

(1) This part 910.

(2) Square Guidelines.

(3) Development Policies and Procedures.

(4) Historic Preservation Plan.

(5) Energy Guidelines.

(6) Side Street Improvements Program.

(7) Policy on Environmental Quality and Control (36 CFR part 907).

(8) Pennsylvania Avenue Lighting Plan.

(9) Public Improvements Program.

(10) Affirmative Action Policy and Procedure (36 CFR part 906).

(11) Policy and Procedures to Facilitate Successful Relocation of Businesses and Residents within the Pennsylvania Avenue Development Area.

(12) All other programs, policies, and regulations that may be approved and adopted by the Board of Directors from time to time.

(c) Pursuant to the Act, Federal and District of Columbia agencies and departments may exercise such existing authority and lawful powers over urban planning and design features of *development* as are consistent with *the Plan.* No department or agency may release, modify, or depart from any feature of *the Plan* without the prior approval of the Corporation.

Subpart B—Urban Planning and Design Concerns

§ 910.10 General.

To facilitate review of each *development* proposal in light of the identified urban planning and design goals of *the Plan*, the following urban planning and design concerns will be the basis upon which the evaluation of such proposals will be made. These concerns are also more specifically reflected in subpart C of this Rule, and in the requirements and recommendations in *Square Guidelines*.

(a) Comprehensive planning and design;

(b) Development density;

(c) Urban design of Washington, DC;

(d) Historic preservation;

(e) New development design;

(f) Land use;

(g) Pedestrian circulation sytems; and

(h) Vehicular circulation and storage systems.

§ 910.11 Comprehensive urban planning and design.

(a) All new *development* is conceived as an integral part of its surroundings, which include the remainder of the Development Area, the Mall, the Federal Triangle, and the District's downtown, and should support Pennsylvania Avenue's function as a bridge between the monumental Federal core to the south and the District's downtown to the north.

(b) All *development* shall be planned and designed to accommodate the requirements and needs of historic preservation, affirmative action, business relocation, and other concerns which will affect the overall planning and design of a *development*.

(c) The design of any *development* shall take into account *the Plan's* proposed future treatment of buildings, squares, and pedestrian spaces in the immediate surrounding area.

(d) The design of any *development* shall be coordinated with the massing, architectural design, servicing, pedestrian amenities, and uses of nearby *development* as prescribed under *the Plan*.

(e) Any *development* adjacent to F Street, NW. shall be accomplished in a manner that will strengthen F Street as a retail core of Washington, DC.

(f) Any *development* along Pennsylvania Avenue shall be designed so as to support the transformation of the Avenue into an attractive and pleasant place for residents and visitors alike, offering pleasant places to stroll, rest, sit and talk, eat, and shop.

(g) All *development* within a *coordinated planning area* shall, to the maximum extent possible, be integrated with regard to the off-street loading and servicing, pedestrian features.

§ 910.12 Development density.

(a) Land would be developed to the fullest extent appropriate in terms of uses, economics, and design so that the city's economic life and tax base can be enhanced.

(b) New *development* shall be designed to achieve maximum development density within the building envelope delineated by specific height restrictions, but shall also establish a compatible and appropriate scale for historic preservation, residential and other uses, and other urban design elements.

(c) Development density is limited by the Zoning Regulations of the District of Columbia and may be further restricted by the Corporation in specific *coordinated planning areas*, provided that any lower density would be economically feasible. Generally, *the Plan* is structured to create high density *development* west of the FBI and lower density *development* east of the FBI.

(d) The density of new *development* should bring new economic life—jobs, shopping, and business opportunities—to Pennsylvania Avenue, while also reinforcing existing activity both on the Avenue and in the adjacent downtown, both within and beyond the Development Area.

§ 910.13 Urban design of Washington, DC.

(a) Pennsylvania Avenue's unique role as the physical and symbolic link between the White House and the U.S. Capitol should be reinforced by new *development* along it.

(b) To reinforce and enrich the legacy of the L'Enfant Plan, the primary function of new *development* in the Development Area is to define open spaces and

plazas, or to reinforce vistas along major streets and thoroughfares.

§910.14 Historic preservation.

(a) The Development Area is located almost entirely within the Pennsylvania Avenue National Historic Site, which was established to preserve the exceptional values of Pennsylvania Avenue and its environs in commemorating or illustrating the history of the United States. The Pennsylvania Avenue Area achieves national historic significance because of both its ceremonial role in the life of the nation and its social and economic role in the life of the residents of Washington for more than a century.

(b) The Historic Preservation Plan of the Corporation sets forth the adopted policy of the Corporation on historic preservation and *development* within the Development Area must be consistent with this policy.

(c) New construction adjacent to historic structures will be required to take into account the qualities of the adjacent structures (with regard to height, scale, proportion, rhythm, texture, materials, architectural detail, and the amount of variety among the structures with respect to these qualities as well as style and date of erection) to ensure that these structures maintain their historic or architectural integrity, but will not necessarily be required to conform to them.

(d) Wholly new construction and new construction in conjunction with preservation will, where appropriate, take into account the historic buildings to remain, aiming for the highest quality of contemporary design, consistent with the goals and objectives of the Historic Preservation Plan.

§910.15 New development design.

(a) All new *development* shall represent the best contemporary architectural and urban planning concepts.

(b) Where new *development* includes or relates to historic or architecturally meritorious buildings which are to be preserved, the design of the new *development* should be aimed at retaining as much of the significant fabric of the Development Area as is possible consistent with the goals of *the Plan*.

§910.16 Land use.

(a) *Development* within the Development Area shall provide, and stimulate in neighboring areas, more lively and varied shopping, cultural, entertainment, and residential opportunities, as well as high quality office uses.

(b) That portion of the Development Area west of the FBI Building is designated for commercial *development*, primarily office and hotel uses with attendant retail and service uses. That portion of the Development Area east of the FBI Building is designated for *development* with residential uses, office, institutional and entertainment uses supported by service and retail uses.

(c) The kinds of uses and their location within the Development Area shall be directly related to creating a lively atmosphere and to promoting an active street life throughout the day, evening, and weekend.

(d) Introduction or expansion of retail uses shall be encouraged as both reinforcement of existing retail uses and creation of new retail activities.

(e) While recognized as important to the commercial life of any inner city, uses that do not generate lively activities are discouraged from locating along those street fronts within the Development Area which are considered major pedestrian thoroughfares.

§910.17 Pedestrian circulation system.

(a) An efficient, pleasant, and stimulating pedestrian circulation system shall be developed to link the components of the Development Area with the Mall and the city's downtown.

(b) Pedestrian circulation systems shall be designed to provide pedestrian comfort and convenience, to create more linear footage of *storefront*, to encourage recognition of the location of various METRO stops or other mass transit locations, and to link various historic and architecturally significant buildings, sites, and monuments which are scattered throughout and beyond the Historic Site.

(c) Curb cuts across the north sidewalk areas of Pennsylvania Avenue shall be prohibited in order to reinforce its importance as the major pedestrian thoroughfare of the Development Area.

§ 910.18 Vehicular circulation and storage systems.

(a) Improvement of the existing vehicular storage and circulation system is necessary in order to create the balanced transportation system called for in *the Plan*, which recognizes the need to maintain air quality, to encourage the use of mass transit, and to provide sufficient off-street parking and loading to make development economically viable.

(b) The general policies of the Corporation are as follows:

(1) To reduce impedance to traffic movement created by service vehicles by requiring well-integrated off-street loading facilities in terms of location of loading berths and access points on a block-by-block basis;

(2) To control the number of vehicles in the Development Area by limiting the number of parking spaces per *development;* and

(3) To encourage the use of public transportation by linking new *development* to transit stops through the system of pedestrian ways.

Subpart C—Standards Uniformly Applicable to the Development Area

§ 910.30 General.

In addition to the specific requirements and recommendations contained in *Square Guidelines* for the applicable *coordinated planning area*, the Standards set forth in this subpart C are uniformly applicable to any *development* within the Development Area.

§ 910.31 High architectural quality.

Development must maintain a uniformly high standard of architecture, representative of the best contemporary design and planning concepts. Great care and sensitivity must be shown in the architectural treatment of new buildings, particularly in terms of massing, facade design (including materials, composition, and detailing), the ground floor and sidewalk pedestrian environment, interior public spaces, and provisions for pedestrian and vehicular *access*. Special design considerations for each *coordinated planning area* are set forth in *Square Guidelines*.

§ 910.32 Historic preservation.

Rehabilitation of buildings within the Development Area, which, according to *the Plan* and the Historic Preservation Plan of the Corporation, are specified for preservation, shall be acomplished (a) in accordance with the Secretary of the Interior's ''Standards for Historic Preservation Projects'': (36 CFR part 68), and (b) consultation with the State Historic Preservation Officer for the District of Columbia.

§ 910.33 Off-street parking.

(a) Off-street parking as a principal use is prohibited, although off-street parking as an accessory use in a *development* (such as a below-grade parking garage) is permitted.

(b) All parking spaces shall be located below grade level.

(c) The minimum number of parking spaces shall be provided in accordance with DC Zoning Regulations.

(d) The maximum number of parking spaces permitted by PADC for a *development* may not exceed the aggregate of the number of spaces allowed for each use within the *development*. The schedule of limitations for parking spaces is as follows:

(1) Hotel: One parking space for each four sleeping rooms or suites;

(2) Places of public assemblage other than hotels: (i.e., arena, armory, theater, auditorium, community center, convention center, concert hall, etc.) one parking space for each ten seats of occupancy capacity for the first 10,000 seats plus one for each 20 seats above 10,000: Provided, that where seats are not fixed, each seven square feet of *gross floor area* usable for seating shall be considered one seat;

(3) Retail, trade, and service establishments: one parking space for each 750 square feet of *gross floor area;*

(4) Residential: One parking space for each 1.2 units;

(5) Offices: One parking space for each 1,800 square feet of *gross floor area*.

§ 910.34 Accommodations for the physically handicapped.

(a) Every *development* shall incorporate features which will make the *development* accessible by the physically handicapped. The standards in the ''American Standard Specifications for Making Buildings and Facilities Accessible to, and Usable by the Physically Handicapped,'' published by the American National Standards Institute, Inc. (ANSI A 117.1–1961 (1971)), are recommended.

(b) Where a *development* includes a historic structure, the Advisory Council on Historic Preservation's policy, ''Supplementary Guidance—Handicapped Access to Historic Properties,'' (45 FR 9757, Feb. 13, 1980), should be observed.

§ 910.35 Fine arts.

Fine arts, including sculpture, paintings, decorative windows, bas-reliefs, ornamental fountains, murals, tapestries, and the like, should be included in each *development*. PADC encourages commissions for original works of art which are appropriate for the *development*. For information and guidance, a reasonable expenditure for fine arts is deemed to be one half of one percent of the total construction cost of the *development*.

§ 910.36 Energy conservation.

All new *development* shall be designed to be economical in energy consumption. The Energy Guidelines of the Corporation, and the District of Columbia Energy Conservation Code Act of 1979 and its implementing regulations set forth the appropriate standards to be observed.

§ 910.37 Fire and life safety.

As a complementary action to satisfying required District of Columbia codes related to fire safety, it is highly recommended that all new *development* be guided by standards of the NFPA Codes for fire and life safety and that all buildings be equipped with an approved sprinkler system.

§ 910.38 Building exterior illumination.

Exterior illumination of a building shall be in conformance with the standards specified in the Pennsylvania Avenue Lighting Plan of the Corporation.

Subpart D—Glossary of Terms

§ 910.50 General.

The definitions appearing in this Glossary of Terms are applicable to this part 910 and to the *Square Guidelines*. In addition, definitions appearing in section 1201 of the Zoning Regulations of the District of Columbia are also applicable. Where a conflict between this subpart and section 1201 of the Zoning Regulations arises in terminology or interpretation, this subpart shall be controlling.

§ 910.51 Access.

Access, when used in reference to parking or loading, means both ingress and egress.

§ 910.52 Buildable area.

Buildable area means that portion of the established *development parcel* which can be devoted to buildings and structures. Generally, this area is bounded by any applicable *building restriction lines*, right-of-way lines and *development parcel* lines. It shall be the *buildable area* of a *development parcel* rather than ''lot,'' as it is established in the DC Zoning Regulations, that will be utilized to establish the maximum *gross floor area* of a *development* within specified portions of the Development Area.

§ 910.53 Building restriction line.

Building restriction line means a line beyond which an exterior wall of any building of a *development* may not be constructed or project, except that architectural articulation, minor architectural embellishments, and subsurface projections are permitted.

§ 910.54 Build-to height.

Build-to height means a specified minimum *height of development* to which the exterior wall of a building in a development must rise. Minor deviations from the *build-to height* for architectural embellishments and articulations of the cornice and roof level are permitted, unless otherwise prohibited by the applicable Square Guidelines or the

District of Columbia's codes and regulations.

§ 910.55 Build-to line.

Build-to line means a line with which the exterior wall of a building in a *development* is required to coincide. Minor deviations from the *build-to line* for such architectural features as *weather protection*, recesses, niches, ornamental projections, entrance bays, or other articulations of the facade are permitted, unless otherwise prohibited by the applicable *Square Guidelines* or the District of Columbia's codes and regulations.

§ 910.56 Coordinated planning area.

Coordinated planning area means a Square, portion of a Square, or group of Squares that is composed of one or more *development parcels* and is treated as a unit under *Square Guidelines* in order to achieve comprehensive planning and design.

§ 910.57 Curb-cut.

Curb-cut means that portion of the curb and sidewalk over which vehicular *access* is allowed. The number of *access* lanes for each *curb-cut* shall be specified in each set of *Square Guidelines*.

§ 910.58 Development.

Development means a structure, including a building, planned unit development, or project resulting from the process of planning, land acquisition, demolition, construction, or *rehabilitation* consistent with the objectives and goals of *the Plan*.

§ 910.59 Development parcel.

Development parcel means an area of land established by the Corporation to be a minimum site on which a *development* may occur under *the Plan* and any applicable *Square Guidelines* adopted by the Corporation. A *development parcel* does not need to be under the ownership of a single individual or entity. A proposal for a *development parcel* may be formulated by any number of individuals or entities, so long as it accommodates the needs and requirements of affirmative action, historic preservation and other policies of the Corporation, and at the same time responds to the goals of comprehensive planning and design for that particular *coordinated planning area*.

§ 910.60 Gross floor area.

Gross floor area is defined in section 1201, Zoning Regulations of the District of Columbia and generally means the sum of the gross horizontal areas of the several floors from the ground floor up of all buildings of a *development* occurring on a lot. *Gross floor area* shall be measured from the exterior faces of exterior walls and from the center line of walls separating two buildings.

§ 910.61 Height of development.

Height of development means the vertical distance measured from a specified point at the curb level to the highest point of the roof or parapet of the *development*, whichever is higher, exclusive of all *roof structures* except as otherwise specified.

§ 910.62 The Plan.

The Plan means The Pennsylvania Avenue Plan—1974, as amended, and prepared pursuant to Pub. L. 92–578, 86 Stat. 1266 (40 U.S.C. 871), and the document which sets forth the *development* concepts upon which this part 910 and *Square Guidelines* are based.

§ 910.63 Rehabilitation.

Rehabilitation means the process of adapting improvements on real property to make possible an efficient contemporary use achieved by means of a combination of construction, repair, or alteration, as well as *restoration* and *replication* of those portions and features of the property that are significant to its historic, architectural, and cultural values, consistent with the goals and objectives of *the Plan*.

§ 910.64 Replication.

Replication means the process of using modern methods and materials to reproduce the exact form and details of a vanished building, structure, object, or portion thereof, as it appeared at a particular period of time, and consistent with the objectives and goals of *the Plan*.

§910.65 Restoration.

Restoration means the process of accurately recovering the form and details of a property as they appeared at a particular period of time by means of removal of later work and the replacement of missing original work, consistent with the objectives and goals of *the Plan*.

§910.66 Sidewalk setback.

Sidewalk setback means that area between a *building restriction line* and the right-of-way of a street into which projections except architectural articulations, minor architectural embellishments, and subsurface structures, are prohibited. The area is to be dedicated to open space activities related to the public improvements program of the Pennsylvania Avenue Development Corporation. Subsurface structures may intrude into the area if they are in compliance with the *Square Guidelines*.

§910.67 Square guidelines.

Square Guidelines establish the Corporation's specific intent with regard to design and development objectives relative to each individual *coordinated planning area*.

§910.68 Storefront.

Storefront means the street level frontage relating to a single establishment.

§910.69 Structural bay.

Structural bay means the distance or span from one vertical structural member fronting on a street to the immediately adjacent vertical structural member fronting on the same street.

§910.70 Vault.

A *vault* means an enclosure of space beneath the surface of the public space or *sidewalk setback*, except that the term *vault* shall not include public utility structures.

§910.71 Weather protection.

Weather protection means a seasonal or permanent shelter to protect pedestrians from sun or precipitation, consisting of arcades, canopies, awnings, or other coverings.

PARTS 911–999 [RESERVED]

CHAPTER X—PRESIDIO TRUST

Part		*Page*
1000	[Reserved]	
1001	General provisions	203
1002	Resource protection, public use and recreation	208
1004	Vehicles and traffic safety	221
1005	Commercial and private operations	225
1007	Requests under the Freedom of Information Act	228
1008	Requests under the Privacy Act	237
1009	Administrative claims under the Federal Tort Claims Act	247
1010	Environmental quality	248
1011	Debt collection	257
1012	Legal process: Testimony by employees and production of records	269
1013–1099	[Reserved]	

PART 1000 [RESERVED]

PART 1001—GENERAL PROVISIONS

Sec.
1001.1 Purpose.
1001.2 Applicability and scope.
1001.3 Penalties.
1001.4 Definitions.
1001.5 Closures and public use limits.
1001.6 Permits.
1001.7 Public notice.
1001.8 Information collection.
1001.10 Symbolic signs.

AUTHORITY: Pub. L. 104–333, 110 Stat. 4097 (16 U.S.C. 460bb note).

SOURCE: 63 FR 35697, June 30, 1998, unless otherwise noted.

§ 1001.1 Purpose.

(a) The regulations in this chapter provide for the proper use, management, government and protection of persons, property and natural and cultural resources within the area under the jurisdiction of the Presidio Trust.

(b) The regulations in this chapter will be utilized to fulfill the statutory purposes of the Presidio Trust Act.

§ 1001.2 Applicability and scope.

(a) The regulations contained in this chapter apply to all persons entering, using, visiting, or otherwise within the boundaries of federally owned lands and waters administered by the Presidio Trust.

(b) The regulations contained in Parts 1002, 1004 and 1005 of this chapter shall not be construed to prohibit administrative activities conducted by the Presidio Trust, or its agents, in accordance with approved policies of the Presidio Trust, or in emergency operations involving threats to life, property, or resources of the area administered by the Presidio Trust.

(c) The regulations in this chapter are intended to treat a mobility-impaired person using a manual or motorized wheelchair as a pedestrian and are not intended to restrict the activities of such a person beyond the degree that the activities of a pedestrian are restricted by the same regulations.

§ 1001.3 Penalties.

A person convicted of violating a provision of the regulations contained in Parts 1001, 1002, 1004 and 1005 of this chapter, within the area administered by the Presidio Trust, shall be punished by a fine as provided by law, or by imprisonment not exceeding 6 months, or both, and shall be adjudged to pay all costs of the proceedings.

§ 1001.4 Definitions.

The following definitions shall apply to this chapter, unless modified by the definitions for a specific part or regulation:

Abandonment means the voluntary relinquishment of property with no intent to retain possession.

Administrative activities means those activities conducted under the authority of the Presidio Trust for the purpose of safeguarding persons or property, implementing management plans and policies developed in accordance and consistent with the regulations in this chapter, or repairing or maintaining government facilities.

Airboat means a vessel that is supported by the buoyancy of its hull and powered by a propeller or fan above the waterline. This definition should not be construed to mean a ''hovercraft,'' that is supported by a fan-generated air cushion.

Aircraft means a device that is used or intended to be used for human flight in the air, including powerless flight.

Archeological resource means material remains of past human life or activities that are of archeological interest and are at least 50 years of age. This term includes, but shall not be limited to, objects made or used by humans, such as pottery, basketry, bottles, weapons, weapon projectiles, tools, structures or portions of structures, pit houses, rock paintings, rock carvings, intaglios, or any portion or piece of the foregoing items, and the physical site, location or context in which they are found, or human skeletal materials or graves.

Authorized emergency vehicle means a vehicle in official use for emergency purposes by a Federal agency or an emergency vehicle as defined by State law.

Authorized person means an employee or agent of the Presidio Trust with delegated authority to enforce the provisions of this chapter.

Bicycle means every device propelled solely by human power upon which a person or persons may ride on land, having one, two, or more wheels, except a manual wheelchair.

Board means the Board of Directors of the Presidio Trust or its designee.

Boundary means the limits of lands or waters administered by the Presidio Trust as specified by Congress, or denoted by presidential proclamation, or recorded in the records of a state or political subdivision in accordance with applicable law, or published pursuant to law, or otherwise published or posted by the Presidio Trust.

Camping means the erecting of a tent or shelter of natural or synthetic material, preparing a sleeping bag or other bedding material for use, parking of a motor vehicle, motor home or trailer, or mooring of a vessel for the apparent purpose of overnight occupancy.

Carry means to wear, bear, or have on or about the person.

Controlled substance means a drug or other substance, or immediate precursor, included in schedules I, II, III, IV, or V of part B of the Controlled Substance Act (21 U.S.C. 812) or a drug or substance added to these schedules pursuant to the terms of the Act.

Cultural resource means material remains of past human life or activities that are of significant cultural interest and are less than 50 years of age. This term includes, but shall not be limited to, objects made or used by humans, such as pottery, basketry, bottles, weapons, weapon projectiles, tools, structures or portions of structures, or any portion or piece of the foregoing items, and the physical site, location, or context in which they are found, or human skeletal materials or graves.

Developed area means roads, parking areas, picnic areas, campgrounds, or other structures, facilities or lands located within development and historic zones depicted on the land management and use map for the area administered by the Presidio Trust.

Downed aircraft means an aircraft that cannot become airborne as a result of mechanical failure, fire, or accident.

Executive Director means the Executive Director of the Presidio Trust or his or her designee.

Firearm means a loaded or unloaded pistol, rifle, shotgun or other weapon which is designed to, or may be readily converted to, expel a projectile by the ignition of a propellant.

Fish means any member of the subclasses Agnatha, Chondrichthyes, or Osteichthyes, or any mollusk or crustacean found in salt water.

Fishing means taking or attempting to take fish.

Hunting means taking or attempting to take wildlife, except trapping.

Legislative jurisdiction means lands and waters under the exclusive or concurrent jurisdiction of the United States.

Manual wheelchair means a device that is propelled by human power, designed for and used by a mobility-impaired person.

Motor vehicle means every vehicle that is self-propelled and every vehicle that is propelled by electric power, but not operated on rails or upon water, except a snowmobile and a motorized wheelchair.

Motorcycle means every motor vehicle having a seat for the use of the rider and designed to travel on not more than three wheels in contact with the ground, but excluding a tractor.

Motorized wheelchair means a self-propelled wheeled device, designed solely for and used by a mobility-impaired person for locomotion, that is both capable of and suitable for use in indoor pedestrian areas.

Net means a seine, weir, net wire, fish trap, or other implement designed to entrap fish, except a hand-held landing net used to retrieve fish taken by hook and line.

Nondeveloped area means all lands and waters within the area administered by the Presidio Trust other than developed areas.

Operator means a person who operates, drives, controls, otherwise has charge of or is in actual physical control of a mechanical mode of transportation or any other mechanical equipment.

Pack animal means horses, burros, mules or other hoofed mammals when designated as pack animals by the Executive Director.

Permit means a written authorization to engage in uses or activities that are

otherwise prohibited, restricted, or regulated.

Person means an individual, firm, corporation, society, association, partnership, or private or public body.

Pet means a dog, cat or any animal that has been domesticated.

Possession means exercising direct physical control or dominion, with or without ownership, over property, or archeological, cultural or natural resources.

Practitioner means a physician, dentist, veterinarian, scientific investigator, pharmacy, hospital or other person licensed, registered or otherwise permitted by the United States or the jurisdiction in which such person practices to distribute or possess a controlled substance in the course of professional practice.

Presidio Trust and *Trust* mean the wholly-owned federal government corporation created by the Presidio Trust Act.

Presidio Trust Act means Title I of Public Law 104–333, 110 Stat. 4097, as the same may be amended.

Presidio Trust road means the main-traveled surface of a roadway open to motor vehicles, owned, controlled or otherwise administered by the Presidio Trust.

Printed matter means message-bearing textual printed material such as books, pamphlets, magazines and leaflets and does not include other forms of merchandise, such as posters, coffee mugs, sunglasses, audio or videotapes, T-shirts, hats, ties, shorts and other clothing articles.

Public use limit means the number of persons; number and type of animals; amount, size and type of equipment, vessels, mechanical modes of conveyance, or food/beverage containers allowed to enter, be brought into, remain in, or be used within a designated geographic area or facility; or the length of time a designated geographic area or facility may be occupied.

Refuse means trash, garbage, rubbish, waste papers, bottles or cans, debris, litter, oil, solvents, liquid waste, or other discarded materials.

Services means, but is not limited to, meals and lodging, labor, professional services, transportation, admission to exhibits, use of telephone or other utilities, or any act for which payment is customarily received.

Smoking means the carrying of lighted cigarettes, cigars or pipes, or the intentional and direct inhalation of smoke from these objects.

Snowmobile means a self-propelled vehicle intended for travel primarily on snow, having a curb weight of not more than 1000 pounds (450 kg), driven by a track or tracks in contact with the snow, and steered by a ski or skis in contact with the snow.

State means a State, territory, or possession of the United States.

State law means the applicable and nonconflicting laws, statutes, regulations, ordinances, infractions and codes of the State(s) and political subdivision(s) within whose exterior boundaries the area administered by the Presidio Trust or a portion thereof is located.

Take or *taking* means to pursue, hunt, harass, harm, shoot, trap, net, capture, collect, kill, wound, or attempt to do any of the aforementioned.

Traffic means pedestrians, ridden or herded animals, vehicles and other conveyances, either singly or together while using any road, trail, street or other thoroughfare for purpose of travel.

Traffic control device means a sign, signal, marking or other device placed or erected by, or with the concurrence of, the Executive Director for the purpose of regulating, warning, guiding or otherwise controlling traffic or regulating the parking of vehicles.

Trap means a snare, trap, mesh, wire or other implement, object or mechanical device designed to entrap or kill animals other than fish.

Trapping means taking or attempting to take wildlife with a trap.

Underway means when a vessel is not at anchor, moored, made fast to the shore or docking facility, or aground.

Unloaded, as applied to weapons and firearms, means that:

(1) There is no unexpended shell, cartridge, or projectile in any chamber or cylinder of a firearm or in a clip or magazine inserted in or attached to a firearm;

(2) A muzzle-loading weapon does not contain gun powder in the pan, or the percussion cap is not in place; and

(3) Bows, crossbows, spear guns or any implement capable of discharging a missile or similar device by means of a loading or discharging mechanism, when that loading or discharging mechanism is not charged or drawn.

Vehicle means every device in, upon, or by which a person or property is or may be transported or drawn on land, except snowmobiles and devices moved by human power or used exclusively upon stationary rails or track.

Vessel means every type or description of craft, other than a seaplane on the water, used or capable of being used as a means of transportation on water, including a buoyant device permitting or capable of free flotation.

Weapon means a firearm, compressed gas or spring-powered pistol or rifle, bow and arrow, crossbow, blowgun, speargun, hand-thrown spear, slingshot, irritant gas device, explosive device, or any other implement designed to discharge missiles, and includes a weapon the possession of which is prohibited under the laws of the State in which the area administered by the Presidio Trust or portion thereof is located.

Wildlife means any member of the animal kingdom and includes a part, product, egg or offspring thereof, or the dead body or part thereof, except fish.

§ 1001.5 Closures and public use limits.

(a) Consistent with applicable legislation and Federal administrative policies, and based upon a determination that such action is necessary for the maintenance of public health and safety, protection of environmental or scenic values, protection of natural or cultural resources, aid to scientific research, implementation of management responsibilities, equitable allocation and use of facilities, or the avoidance of conflict among visitor use activities, the Board may:

(1) Establish, for all or a portion of the area administered by the Presidio Trust, a reasonable schedule of visiting hours, impose public use limits, or close all or a portion of the area administered by the Presidio Trust to all public use or to a specific use or activity.

(2) Designate areas for a specific use or activity, or impose conditions or restrictions on a use or activity.

(3) Terminate a restriction, limit, closure, designation, condition, or visiting hour restriction imposed under paragraph (a)(1) or (2) of this section.

(b) Except in emergency situations, a closure, designation, use or activity restriction or condition, or the termination or relaxation of such, which is of a nature, magnitude and duration that will result in a significant alteration in the public use pattern of the area administered by the Presidio Trust, adversely affect the natural, aesthetic, scenic or cultural values of the area administered by the Presidio Trust, require a long-term or significant modification in the resource management objectives of the area administered by the Presidio Trust, or is of a highly controversial nature, shall be published as rulemaking in the FEDERAL REGISTER.

(c) Except in emergency situations, prior to implementing or terminating a restriction, condition, public use limit or closure, the Board shall prepare a written determination justifying the action. That determination shall set forth the reason(s) the restriction, condition, public use limit or closure authorized by paragraph (a) of this section has been established, and an explanation of why less restrictive measures will not suffice, or in the case of a termination of a restriction, condition, public use limit or closure previously established under paragraph (a) of this section, a determination as to why the restriction is no longer necessary and a finding that the termination will not adversely impact resources of the area administered by the Presidio Trust. This determination shall be available to the public upon request.

(d) To implement a public use limit, the Board may establish a permit, registration, or reservation system. Permits shall be issued in accordance with the criteria and procedures of § 1001.6.

(e) Except in emergency situations, the public will be informed of closures, designations, and use or activity restrictions or conditions, visiting hours,

public use limits, public use limit procedures, and the termination or relaxation of such, in accordance with § 1001.7.

(f) Violating a closure, designation, use or activity restriction or condition, schedule of visiting hours, or public use limit is prohibited.

§ 1001.6 Permits.

(a) When authorized by regulations set forth in this chapter, the Executive Director may issue a permit to authorize an otherwise prohibited or restricted activity or impose a public use limit. The activity authorized by a permit shall be consistent with applicable legislation, Federal regulations and administrative policies, and based upon a determination that public health and safety, environmental or scenic values, natural or cultural resources, scientific research, implementation of management responsibilities, proper allocation and use of facilities, or the avoidance of conflict among visitor use activities will not be adversely impacted.

(b) Except as otherwise provided, application for a permit shall be submitted to the Executive Director during normal business hours.

(c) The public will be informed of the existence of a permit requirement in accordance with § 1001.7.

(d) Unless otherwise provided for by the regulations in this chapter, the Executive Director shall deny a permit that has been properly applied for only upon a determination that the designated capacity for an area or facility would be exceeded; or that one or more of the factors set forth in paragraph (a) of this section would be adversely impacted. The basis for denial shall be provided to the applicant upon request.

(e) The Executive Director shall include in a permit the terms and conditions that the Executive Director deems necessary to protect resources of the area administered by the Presidio Trust or public safety and may also include terms or conditions established pursuant to the authority of any other section of this chapter.

(f) A compilation of those activities requiring a permit shall be maintained by the Executive Director and available to the public upon request.

(g) The following are prohibited:

(1) Engaging in an activity subject to a permit requirement imposed pursuant to this section without obtaining a permit; or

(2) Violating a term or condition of a permit issued pursuant to this section.

(h) Violating a term or condition of a permit issued pursuant to this section may also result in the suspension or revocation of the permit by the Executive Director.

§ 1001.7 Public notice.

(a) Whenever the authority of § 1001.5(a) is invoked to restrict or control a public use or activity, to relax or revoke an existing restriction or control, to designate all or a portion of the area administered by the Presidio Trust as open or closed, or to require a permit to implement a public use limit, the public shall be notified by one or more of the following methods:

(1) Signs posted at conspicuous locations, such as normal points of entry and reasonable intervals along the boundary of the affected locale.

(2) Maps available in the office of the Presidio Trust and other places convenient to the public.

(3) Publication in a newspaper of general circulation in the affected area.

(4) Other appropriate methods, such as the removal of closure signs, use of electronic media, brochures, maps and handouts.

(b) In addition to the above-described notification procedures, the Board shall compile in writing all the designations, closures, permit requirements and other restrictions imposed under discretionary authority. This compilation shall be updated annually and made available to the public upon request.

§ 1001.8 Information collection.

The information collection requirements contained in 36 CFR 1001.5, 1002.5, 1002.10, 1002.12, 1002.17, 1002.33, 1002.38, 1002.50, 1002.51, 1002.52, 1002.60, 1002.61, 1002.62, 1004.4 and 1004.11 have been approved by the Office of Management and Budget under 44 U.S.C. 3501 *et seq.*, and assigned clearance number 1024–0026. This information is being collected to provide the Executive Director data necessary to issue permits for special uses of the area administered

by the Presidio Trust and to obtain notification of accidents that occur within the area administered by the Presidio Trust. This information will be used to grant administrative benefits and to facilitate prompt emergency response to accidents. In 36 CFR 1002.33 and 1004.4, the obligation to respond is mandatory; in all other sections the obligation to respond is required in order to obtain a benefit.

§ 1001.10 Symbolic signs.

(a) The signs pictured in 36 CFR 1.10 provide general information and regulatory guidance in the area administered by the Presidio Trust. Certain of the signs designate activities that are either allowed or prohibited. Activities symbolized by a sign bearing a slash mark are prohibited.

(b) The use of other types of signs not herein depicted is not precluded.

PART 1002—RESOURCE PROTECTION, PUBLIC USE AND RECREATION

Sec.

1002.1 Preservation of natural, cultural and archeological resources.
1002.2 Wildlife protection.
1002.3 Fishing.
1002.4 Weapons, traps and nets.
1002.5 Research specimens.
1002.6 Commercial dog walking.
1002.10 Camping and food storage.
1002.11 Picnicking.
1002.12 Audio disturbances.
1002.13 Fires.
1002.14 Sanitation and refuse.
1002.15 Pets.
1002.16 Horses and pack animals.
1002.17 Aircraft and air delivery.
1002.18 Snowmobiles.
1002.19 Winter activities.
1002.20 Skating, skateboards and similar devices.
1002.21 Smoking.
1002.22 Property.
1002.23 Recreation fees.
1002.30 Misappropriation of property and services.
1002.31 Trespassing, tampering and vandalism.
1002.32 Interfering with agency functions.
1002.33 Report of injury or damage.
1002.34 Disorderly conduct.
1002.35 Alcoholic beverages and controlled substances.
1002.36 Gambling.
1002.37 Noncommercial soliciting.
1002.38 Explosives.
1002.50 Special events.
1002.51 Public assemblies, meetings.
1002.52 Sale or distribution of printed matter.
1002.60 Livestock use and agriculture.
1002.61 Residing on Federal lands.
1002.62 Memorialization.
1002.63 Boating and water use activities.

AUTHORITY: Pub. L. 104–333, 110 Stat. 4097 (16 U.S.C. 460bb note).

SOURCE: 63 FR 35700, June 30, 1998, unless otherwise noted.

§ 1002.1 Preservation of natural, cultural and archeological resources.

(a) Except as otherwise provided in this chapter, the following is prohibited:

(1) Possessing, destroying, injuring, defacing, removing, digging, or disturbing from its natural state:

(i) Living or dead wildlife or fish, or the parts or products thereof, such as antlers or nests.

(ii) Plants or the parts or products thereof.

(iii) Nonfossilized and fossilized paleontological specimens, cultural or archeological resources, or the parts thereof.

(iv) A mineral resource or cave formation or the parts thereof.

(2) Introducing wildlife, fish or plants, including their reproductive bodies, into an ecosystem within the area administered by the Presidio Trust.

(3) Tossing, throwing or rolling rocks or other items inside caves or caverns, into valleys, canyons, or caverns, down hillsides or mountainsides, or into thermal features.

(4) Using or possessing wood gathered from within the area administered by the Presidio Trust: Provided, however, that the Board may designate areas where dead wood on the ground may be collected for use as fuel for campfires within the area administered by the Presidio Trust.

(5) Walking on, climbing, entering, ascending, descending, or traversing an archeological or cultural resource, monument, or statue, except in designated areas and under conditions established by the Board.

(6) Possessing, destroying, injuring, defacing, removing, digging, or disturbing a structure or its furnishing or

fixtures, or other cultural or archeological resources.

(7) Possessing or using a mineral or metal detector, magnetometer, side scan sonar, other metal detecting device, or subbottom profiler. This paragraph does not apply to:

(i) A device broken down and stored or packed to prevent its use while in the area administered by the Presidio Trust.

(ii) Electronic equipment used primarily for the navigation and safe operation of boats and aircraft.

(iii) Mineral or metal detectors, magnetometers, or subbottom profilers used for authorized scientific, mining, or administrative activities.

(b) The Board may restrict hiking or pedestrian use to a designated trail or walkway system pursuant to §§1001.5 and 1001.7 of this chapter. Leaving a trail or walkway to shortcut between portions of the same trail or walkway, or to shortcut to an adjacent trail or walkway in violation of designated restrictions is prohibited.

(c)(1) The Board may designate certain fruits, berries, nuts, or unoccupied seashells which may be gathered by hand for personal use or consumption upon a written determination that the gathering or consumption will not adversely affect wildlife, the reproductive potential of a plant species, or otherwise adversely affect the resources of the area administered by the Presidio Trust.

(2) The Board may:

(i) Limit the size and quantity of the natural products that may be gathered or possessed for this purpose; or

(ii) Limit the location where natural products may be gathered; or

(iii) Restrict the possession and consumption of natural products to the area administered by the Presidio Trust.

(3) The following are prohibited:

(i) Gathering or possessing undesignated natural products.

(ii) Gathering or possessing natural products in violation of the size or quantity limits designated by the Board.

(iii) Unauthorized removal of natural products from the area administered by the Presidio Trust.

(iv) Gathering natural products outside of designated areas.

(v) Sale or commercial use of natural products.

(d) This section shall not be construed as authorizing the taking, use or possession of fish, wildlife or plants for ceremonial or religious purposes, except where specifically authorized by Federal statutory law, treaty rights, or in accordance with §1002.2 or §1002.3.

§1002.2 Wildlife protection.

(a) The following are prohibited:

(1) The taking of wildlife.

(2) The feeding, touching, teasing, frightening or intentional disturbing of wildlife nesting, breeding or other activities.

(3) Possessing unlawfully taken wildlife or portions thereof.

(b) *Hunting and trapping*. Hunting and trapping are prohibited within the area administered by the Presidio Trust.

(c) The Board may establish conditions and procedures for transporting lawfully taken wildlife through the area administered by the Presidio Trust. Violation of these conditions and procedures is prohibited.

(d) The Board may designate all or portions of the area administered by the Presidio Trust as closed to the viewing of wildlife with an artificial light. Use of an artificial light for purposes of viewing wildlife in closed areas is prohibited.

(e) The regulations contained in this section apply, regardless of land ownership, on all lands and waters within the boundaries of the area administered by the Presidio Trust that are under the legislative jurisdiction of the United States.

§1002.3 Fishing.

Fishing is prohibited within the area administered by the Presidio Trust.

§1002.4 Weapons, traps and nets.

(a)(1) Except as otherwise provided in this section, the following are prohibited:

(i) Possessing a weapon, trap or net.

(ii) Carrying a weapon, trap or net.

(iii) Using a weapon, trap or net.

(2) Weapons, traps or nets may be carried, possessed or used:

(i) At designated times and locations in the area administered by the Presidio Trust where:

(A) The taking of wildlife is authorized by law in accordance with § 1002.2;

(B) The taking of fish is authorized by law in accordance with § 1002.3.

(ii) Within a residential dwelling. For purposes of this paragraph only, the term ''residential dwelling'' means a fixed housing structure which is either the principal residence of its occupants, or is occupied on a regular and recurring basis by its occupants as an alternate residence or vacation home.

(3) Traps, nets and unloaded weapons may be possessed within a temporary lodging or mechanical mode of conveyance when such implements are rendered temporarily inoperable or are packed, cased or stored in a manner that will prevent their ready use.

(b) Carrying or possessing a loaded weapon in a motor vehicle, vessel or other mode of transportation is prohibited, except that carrying or possessing a loaded weapon in a vessel is allowed when such vessel is not being propelled by machinery and is used as a shooting platform in accordance with Federal and State law.

(c) The use of a weapon, trap or net in a manner that endangers persons or property is prohibited.

(d) Authorized Federal, State and local law enforcement officers may carry firearms in the performance of their official duties.

(e) The carrying or possessing of a weapon, trap or net in violation of applicable Federal and State laws is prohibited.

(f) The regulations contained in this section apply, regardless of land ownership, on all lands and waters within the boundaries of the area administered by the Presidio Trust that are under the legislative jurisdiction of the United States.

§ 1002.5 Research specimens.

(a) Taking plants, fish, wildlife, rocks or minerals except in accordance with other regulations of this chapter or pursuant to the terms and conditions of a specimen collection permit, is prohibited.

(b) A specimen collection permit may be issued only to an official representative of a reputable scientific or educational institution or a State or Federal agency for the purpose of research, baseline inventories, monitoring, impact analysis, group study, or museum display when the Executive Director determines that the collection is necessary to the stated scientific or resource management goals of the institution or agency and that all applicable Federal and State permits have been acquired, and that the intended use of the specimens and their final disposal is in accordance with applicable law and Federal administrative policies. A permit shall not be issued if removal of the specimen would result in damage to other natural or cultural resources, affect adversely environmental or scenic values, or if the specimen is readily available outside of the area administered by the Presidio Trust.

(c) A permit to take an endangered or threatened species listed pursuant to the Endangered Species Act, or similarly identified by the States, shall not be issued unless the species cannot be obtained outside of the area administered by the Presidio Trust and the primary purpose of the collection is to enhance the protection or management of the species.

(d) A permit authorizing the killing of plants, fish or wildlife may be issued only when the Executive Director approves a written research proposal and determines that the collection will not be inconsistent with the purposes of the Presidio Trust Act and has the potential for conserving and perpetuating the species subject to collection.

(e) Specimen collection permits shall contain the following conditions:

(1) Specimens placed in displays or collections will bear official National Park Service museum labels and their catalog numbers will be registered in the National Park Service National Catalog.

(2) Specimens and data derived from consumed specimens will be made available to the public and reports and publications resulting from a research specimen collection permit shall be filed with the Executive Director.

(f) Violation of the terms and conditions of a permit issued in accordance with this section is prohibited and may

result in the suspension or revocation of the permit.

§ 1002.6 Commercial dog walking.

(a) The walking of more than six dogs at one time by any one person for consideration (commercial dog walking) is prohibited within the area administered by the Presidio Trust.

(b) The walking of more than three dogs, with a limit of six dogs, at one time by any one person for consideration (commercial dog walking) within the area administered by the Presidio Trust, where dog walking is otherwise allowed, is hereby authorized provided that:

(1) That person has a valid commercial dog walking permit issued by the Golden Gate National Recreation Area (GGNRA);

(2) The walking of more than three dogs, with a limit of six dogs, is done pursuant to the conditions of that permit; and

(3) The commercial dog walker badge issued to the permittee by the GGNRA shall be visibly displayed at all times as directed in the permit while the permittee is engaging in commercial dog walking activities, and shall be provided upon request to any person authorized to enforce this provision.

[79 FR 48993, Aug. 19, 2014]

§ 1002.10 Camping and food storage.

(a) The Board may require permits, designate sites or areas, and establish conditions for camping.

(b) The following are prohibited:

(1) Digging or leveling the ground at a campsite.

(2) Leaving camping equipment, site alterations, or refuse after departing from the campsite.

(3) Camping within 25 feet of a water hydrant or main road, or within 100 feet of a flowing stream, river or body of water, except as designated.

(4) Creating or sustaining unreasonable noise between the hours of 10:00 p.m. and 6:00 a.m., considering the nature and purpose of the actor's conduct, impact on visitors or tenants, location, and other factors which would govern the conduct of a reasonably prudent person under the circumstances.

(5) The installation of permanent camping facilities.

(6) Displaying wildlife carcasses or other remains or parts thereof.

(7) Connecting to a utility system, except as designated.

(8) Failing to obtain a permit, where required.

(9) Violating conditions which may be established by the Board.

(10) Camping outside of designated sites or areas.

(c) Violation of the terms and conditions of a permit issued in accordance with this section is prohibited and may result in the suspension or revocation of the permit.

(d) *Food storage*. The Board may designate all or a portion of the area administered by the Presidio Trust where food, lawfully taken fish or wildlife, garbage, and equipment used to cook or store food must be kept sealed in a vehicle, or in a camping unit that is constructed of solid, non-pliable material, or suspended at least 10 feet above the ground and 4 feet horizontally from a post, tree trunk, or other object, or shall be stored as otherwise designated. Violation of this restriction is prohibited. This restriction does not apply to food that is being transported, consumed, or prepared for consumption.

§ 1002.11 Picnicking.

Picnicking is allowed, except in designated areas closed in accordance with § 1001.5 of this chapter. The Board may establish conditions for picnicking in areas where picnicking is allowed. Picnicking in violation of established conditions is prohibited.

§ 1002.12 Audio disturbances.

(a) The following are prohibited:

(1) Operating motorized equipment or machinery such as an electric generating plant, motor vehicle, motorized toy, or an audio device, such as a radio, television set, tape deck or musical instrument, in a manner that exceeds a noise level of 60 decibels measured on the A-weighted scale at 50 feet; or that, if below that level, nevertheless makes noise which is unreasonable, considering the nature and purpose of the actor's conduct, location, time of day or night, purposes of the Presidio Trust Act, impact on visitors or tenants, and

other factors that would govern the conduct of a reasonably prudent person under the circumstances.

(2) In developed areas, operating a power saw, except pursuant to the terms and conditions of a permit.

(3) In nondeveloped areas, operating any type of portable motor or engine, or device powered by a portable motor or engine, except pursuant to the terms and conditions of a permit.

(4) Operating a public address system, except in connection with a public gathering or special event for which a permit has been issued pursuant to § 1002.50 or § 1002.51.

(b) Violation of the terms and conditions of a permit issued in accordance with this section is prohibited and may result in the suspension or revocation of the permit.

§ 1002.13 Fires.

(a) The following are prohibited:

(1) Lighting or maintaining a fire, except in designated areas or receptacles and under conditions that may be established by the Board.

(2) Using stoves or lanterns in violation of established restrictions.

(3) Lighting, tending, or using a fire, stove or lantern in a manner that threatens, causes damage to, or results in the burning of property, real property or resources of the area administered by the Presidio Trust, or creates a public safety hazard.

(4) Leaving a fire unattended.

(5) Throwing or discarding lighted or smoldering material in a manner that threatens, causes damage to, or results in the burning of property or resources of the area administered by the Presidio Trust, or creates a public safety hazard.

(b) Fires shall be extinguished upon termination of use and in accordance with such conditions as may be established by the Board. Violation of these conditions is prohibited.

(c) During periods of high fire danger, the Executive Director may close all or a portion of the area administered by the Presidio Trust to the lighting or maintaining of a fire.

(d) The regulations contained in this section apply, regardless of land ownership, on all lands and waters within the boundaries of the area administered by the Presidio Trust that are under the legislative jurisdiction of the United States.

§ 1002.14 Sanitation and refuse.

(a) The following are prohibited:

(1) Disposing of refuse in other than refuse receptacles.

(2) Using government refuse receptacles or other refuse facilities for dumping household, commercial, or industrial refuse, brought as such from private or municipal property, except in accordance with conditions established by the Executive Director.

(3) Depositing refuse in the plumbing fixtures or vaults of a toilet facility.

(4) Draining refuse from a trailer or other vehicle, except in facilities provided for such purpose.

(5) Bathing, or washing food, clothing, dishes, or other property at public water outlets, fixtures or pools, except at those designated for such purpose.

(6) Polluting or contaminating waters or water courses within the area administered by the Presidio Trust.

(7) Disposing of fish remains on land, or in waters within 200 feet of boat docks or designated swimming beaches, or within developed areas, except as otherwise designated.

(8) In developed areas, the disposal of human body waste, except at designated locations or in fixtures provided for that purpose.

(9) In nondeveloped areas, the disposal of human body waste within 100 feet of a water source, high water mark of a body of water, or a campsite, or within sight of a trail, except as otherwise designated.

(b) The Board may establish conditions concerning the disposal, containerization, or carryout of human body waste. Violation of these conditions is prohibited.

§ 1002.15 Pets.

(a) The following are prohibited:

(1) Possessing a pet in a public building, public transportation vehicle, or location designated as a swimming beach, or any structure or area closed to the possession of pets by the Board. This paragraph shall not apply to guide dogs accompanying visually impaired

persons or hearing ear dogs accompanying hearing-impaired persons.

(2) Failing to crate, cage, restrain on a leash which shall not exceed six feet in length, or otherwise physically confine a pet at all times.

(3) Leaving a pet unattended and tied to an object, except in designated areas or under conditions which may be established by the Board.

(4) Allowing a pet to make noise that is unreasonable considering location, time of day or night, impact on visitors or tenants, and other relevant factors, or that frightens wildlife by barking, howling, or making other noise.

(5) Failing to comply with pet excrement disposal conditions which may be established by the Board.

(b) Pets or feral animals that are running-at-large and observed by an authorized person in the act of killing, injuring or molesting humans, livestock, or wildlife may be destroyed if necessary for public safety or protection of wildlife, livestock, or other resources of the area administered by the Presidio Trust.

(c) Pets running-at-large may be impounded, and the owner may be charged reasonable fees for kennel or boarding costs, feed, veterinarian fees, transportation costs, and disposal. An impounded pet may be put up for adoption or otherwise disposed of after being held for 72 hours from the time the owner was notified of capture or 72 hours from the time of capture if the owner is unknown.

(d) Pets may be kept by residents of the area administered by the Presidio Trust consistent with the provisions of this section and in accordance with conditions which may be established by the Board. Violation of these conditions is prohibited.

(e) This section does not apply to dogs used by authorized Federal, State and local law enforcement officers in the performance of their official duties.

§ 1002.16 Horses and pack animals.

The following are prohibited:

(a) The use of animals other than those designated as ''pack animals'' for purposes of transporting equipment.

(b) The use of horses or pack animals outside of trails, routes or areas designated for their use.

(c) The use of horses or pack animals on a Presidio Trust road, except where such travel is necessary to cross to or from designated trails, or areas, or privately owned property, and no alternative trails or routes have been designated; or when the road has been closed to motor vehicles.

(d) Free-trailing or loose-herding of horses or pack animals on trails, except as designated.

(e) Allowing horses or pack animals to proceed in excess of a slow walk when passing in the immediate vicinity of persons on foot or bicycle.

(f) Obstructing a trail, or making an unreasonable noise or gesture, considering the nature and purpose of the actor's conduct, and other factors that would govern the conduct of a reasonably prudent person, while horses or pack animals are passing.

(g) Violation of conditions which may be established by the Board concerning the use of horses or pack animals.

§ 1002.17 Aircraft and air delivery.

(a) Delivering or retrieving a person or object by parachute, helicopter, or other airborne means, except in emergencies involving public safety or serious property loss, or pursuant to the terms and conditions of a permit, is prohibited.

(b) The provisions of this section, other than paragraph (c) of this section, shall not be applicable to official business of the Federal government, or emergency rescues in accordance with the directions of the Executive Director, or to landings due to circumstances beyond the control of the operator.

(c)(1) Except as provided in paragraph (c)(3) of this section, the owners of a downed aircraft shall remove the aircraft and all component parts thereof in accordance with procedures established by the Executive Director. In establishing removal procedures, the Executive Director is authorized to establish a reasonable date by which aircraft removal operations must be complete; determine times and means of access to and from the downed aircraft; and specify the manner or method of removal.

(2) Failure to comply with procedures and conditions established under paragraph (c)(1) of this section is prohibited.

(3) The Executive Director may waive the requirements of paragraph (c)(1) of this section or prohibit the removal of downed aircraft, upon a determination that the removal of downed aircraft would constitute an unacceptable risk to human life; the removal of a downed aircraft would result in extensive resource damage; or the removal of a downed aircraft is impracticable or impossible.

(d) The use of aircraft shall be in accordance with regulations of the Federal Aviation Administration as found in 14 CFR chapter I.

(e) The operation or use of hovercraft is prohibited.

(f) Violation of the terms and conditions of a permit issued in accordance with this section is prohibited and may result in the suspension or revocation of the permit.

(g) The use of devices designed to carry persons through the air in powerless flight is allowed at times and locations designated by the Board, pursuant to the terms and conditions of a permit.

§ 1002.18 Snowmobiles.

The use of snowmobiles is prohibited.

§ 1002.19 Winter activities.

(a) Skiing, snowshoeing, ice skating, sledding, innertubing, tobogganing and similar winter sports are prohibited on Presidio Trust roads and in parking areas open to motor vehicle traffic, except as otherwise designated.

(b) The towing of persons on skis, sleds, or other sliding devices by motor vehicle or snowmobile is prohibited, except in designated areas or routes.

(c) Failure to abide by area designations or activity restrictions established under this section is prohibited.

§ 1002.20 Skating, skateboards and similar devices.

Using roller skates, skateboards, roller skis, coasting vehicles, or similar devices is prohibited, except in designated areas.

§ 1002.21 Smoking.

(a) The Board may designate a portion of the area administered by the Presidio Trust, or all or a portion of a building, structure or facility as closed to smoking when necessary to protect resources, reduce the risk of fire, or prevent conflicts among visitor use activities. Smoking in an area or location so designated is prohibited.

(b) Smoking is prohibited within all caves and caverns.

[63 FR 35700, June 30, 1998, as amended at 71 FR 10610, Mar. 2, 2006]

§ 1002.22 Property.

(a) The following are prohibited:

(1) Abandoning property.

(2) Leaving property unattended for longer than 24 hours, except in locations where longer time periods have been designated or in accordance with conditions established by the Board.

(3) Failing to turn in found property to the Executive Director as soon as practicable.

(b) *Impoundment of property*. (1) Property determined to be left unattended in excess of an allowed period of time may be impounded by the Executive Director.

(2) Unattended property that interferes with visitor safety or orderly management of the area administered by the Presidio Trust, or that presents a threat to resources of the area administered by the Presidio Trust may be impounded by the Executive Director at any time.

(3) Found or impounded property shall be inventoried to determine ownership and safeguard personal property.

(4) The owner of record is responsible and liable for charges to the person who has removed, stored, or otherwise disposed of property impounded pursuant to this section; or the Executive Director may assess the owner reasonable fees for the impoundment and storage of property impounded pursuant to this section.

(c) *Disposition of property*. (1) Unattended property impounded pursuant to this section shall be deemed to be abandoned unless claimed by the owner or an authorized representative thereof within 60 days. The 60-day period shall begin when the rightful owner of the

property has been notified, if the owner can be identified, or from the time the property was placed in the Executive Director's custody, if the owner cannot be identified.

(2) Unclaimed, found property shall be stored for a minimum period of 60 days and, unless claimed by the owner or an authorized representative thereof, may be claimed by the finder, provided that the finder is not an employee of the Presidio Trust. Found property not claimed by the owner or an authorized representative or the finder shall be deemed abandoned.

(3) Abandoned property shall be disposed of in accordance with law.

(4) Property, including real property, located within the area administered by the Presidio Trust and owned by a deceased person, shall be disposed of in accordance with the laws of the State within whose exterior boundaries the property is located.

(d) The regulations contained in paragraphs (a)(2), (b) and (c) of this section apply, regardless of land ownership, on all lands and waters within the boundaries of the area administered by the Presidio Trust that are under the legislative jurisdiction of the United States.

[63 FR 35700, June 30, 1998, as amended at 71 FR 10610, Mar. 2, 2006]

§ 1002.23 Recreation fees.

(a) Recreation fees shall be charged in the area administered by the Presidio Trust to the same extent that recreation fees have been established for the Golden Gate National Recreation Area in accordance with 36 CFR part 71.

(b) Entering designated entrance fee areas or using specialized sites, facilities, equipment or services, or participating in group activities, recreation events, or other specialized recreation uses for which recreation fees have been established without paying the required fees and possessing the applicable permits is prohibited. Violation of the terms and conditions of a permit issued in accordance with this section is prohibited and may result in the suspension or revocation of the permit.

(c) The Executive Director may, when in the public interest, prescribe periods during which the collection of recreation fees shall be suspended.

§ 1002.30 Misappropriation of property and services.

(a) The following are prohibited:

(1) Obtaining or exercising unlawful possession over the property of another with the purpose to deprive the owner of the property.

(2) Obtaining property or services offered for sale or compensation without making payment or offering to pay.

(3) Obtaining property or services offered for sale or compensation by means of deception or a statement of past, present or future fact that is instrumental in causing the wrongful transfer of property or services, or using stolen, forged, expired, revoked or fraudulently obtained credit cards or paying with negotiable paper on which payment is refused.

(4) Concealing unpurchased merchandise on or about the person without the knowledge or consent of the seller or paying less than purchase price by deception.

(5) Acquiring or possessing the property of another, with knowledge or reason to believe that the property is stolen.

(b) The regulations contained in this section apply, regardless of land ownership, on all lands and waters within the boundaries of the area administered by the Presidio Trust that are under the legislative jurisdiction of the United States.

§ 1002.31 Trespassing, tampering and vandalism.

(a) The following are prohibited:

(1) *Trespassing*. Trespassing, entering or remaining in or upon property or real property not open to the public, except with the express invitation or consent of the person having lawful control of the property or real property.

(2) *Tampering*. Tampering or attempting to tamper with property or real property, or moving, manipulating or setting in motion any of the parts thereof, except when such property is under one's lawful control or possession.

(3) *Vandalism.* Destroying, injuring, defacing, or damaging property or real property.

(b) The regulations contained in this section apply, regardless of land ownership, on all lands and waters within the boundaries of the area administered by the Presidio Trust that are under the legislative jurisdiction of the United States.

§ 1002.32 Interfering with agency functions.

(a) The following are prohibited:

(1) *Interference.* Threatening, resisting, intimidating, or intentionally interfering with a government employee or agent engaged in an official duty, or on account of the performance of an official duty.

(2) *Lawful order.* Violating the lawful order of a government employee or agent authorized to maintain order and control public access and movement during fire fighting operations, search and rescue operations, wildlife management operations involving animals that pose a threat to public safety, law enforcement actions, and emergency operations that involve a threat to public safety or resources of the area administered by the Presidio Trust, or other activities where the control of public movement and activities is necessary to maintain order and public safety.

(3) *False information.* Knowingly giving a false or fictitious report or other false information to an authorized person investigating an accident or violation of law or regulation, or on an application for a permit.

(4) *False Report.* Knowingly giving a false report for the purpose of misleading a government employee or agent in the conduct of official duties, or making a false report that causes a response by the United States to a fictitious event.

(b) The regulations contained in this section apply, regardless of land ownership, on all lands and waters within the boundaries of the area administered by the Presidio Trust that are under the legislative jurisdiction of the United States.

§ 1002.33 Report of injury or damage.

(a) A person involved in an incident resulting in personal injury or property damage exceeding $300, other than an accident reportable under § 1004.4 of this chapter, shall report the incident to the Executive Director as soon as possible. This notification does not satisfy reporting requirements imposed by applicable State law.

(b) Failure to report an incident in accordance with paragraph (a) of this section is prohibited.

§ 1002.34 Disorderly conduct.

(a) A person commits disorderly conduct when, with intent to cause public alarm, nuisance, jeopardy or violence, or knowingly or recklessly creating a risk thereof, such person commits any of the following prohibited acts:

(1) Engages in fighting or threatening, or in violent behavior.

(2) Uses language, an utterance, or gesture, or engages in a display or act that is obscene, physically threatening or menacing, or done in a manner that is likely to inflict injury or incite an immediate breach of the peace.

(3) Makes noise that is unreasonable, considering the nature and purpose of the actor's conduct, location, time of day or night, and other factors that would govern the conduct of a reasonably prudent person under the circumstances.

(4) Creates or maintains a hazardous or physically offensive condition.

(b) The regulations contained in this section apply, regardless of land ownership, on all lands and waters within the boundaries of the area administered by the Presidio Trust that are under the legislative jurisdiction of the United States.

§ 1002.35 Alcoholic beverages and controlled substances.

(a) *Alcoholic beverages.* (1) The use and possession of alcoholic beverages within the area administered by the Presidio Trust is allowed in accordance with the provisions of this section.

(2) The following are prohibited:

(i) The sale or gift of an alcoholic beverage to a person under 21 years of age, except where allowed by State law. In a State where a lower minimum

age is established, that age limit will apply for purposes of this paragraph.

(ii) The possession of an alcoholic beverage by a person under 21 years of age, except where allowed by State law. In a State where a lower minimum age is established, that age will apply for purposes of this paragraph.

(3)(i) The Board may close all or a portion of a public use area or public facility within the area administered by the Presidio Trust to the consumption of alcoholic beverages and/or to the possession of a bottle, can or other receptacle containing an alcoholic beverage that is open, or that has been opened, or whose seal is broken or the contents of which have been partially removed. Provided however, that such a closure may only be implemented following a determination made by the Board that:

(A) The consumption of an alcoholic beverage or the possession of an open container of an alcoholic beverage would be inappropriate considering other uses of the location and the purpose for which it is maintained or established; or

(B) Incidents of aberrant behavior related to the consumption of alcoholic beverages are of such magnitude that the diligent application of the authorities in this section and §§1001.5 and 1002.34 of this chapter, over a reasonable time period, does not alleviate the problem.

(ii) A closure imposed by the Board does not apply to an open container of an alcoholic beverage that is stored in compliance with the provisions of §1004.14 of this chapter.

(iii) Violating a closure imposed pursuant to this section is prohibited.

(b) *Controlled substances.* The following are prohibited:

(1) The delivery of a controlled substance, except when distribution is made by a practitioner in accordance with applicable law. For the purposes of this paragraph, delivery means the actual, attempted or constructive transfer of a controlled substance whether or not there exists an agency relationship.

(2) The possession of a controlled substance, unless such substance was obtained by the possessor directly, or pursuant to a valid prescription or order, from a practitioner acting in the course of professional practice or otherwise allowed by Federal or State law.

(c) Presence within the area administered by the Presidio Trust when under the influence of alcohol or a controlled substance to a degree that may endanger oneself or another person, or damage property or resources of the area administered by the Presidio Trust, is prohibited.

§1002.36 Gambling.

(a) Gambling in any form, or the operation of gambling devices, is prohibited.

(b) This regulation applies, regardless of land ownership, on all lands and waters within the boundaries of the area administered by the Presidio Trust that are under the legislative jurisdiction of the United States.

§1002.37 Noncommercial soliciting.

Soliciting or demanding gifts, money, goods or services is prohibited, except pursuant to the terms and conditions of a permit that has been issued under §1002.50, §1002.51 or §1002.52.

§1002.38 Explosives.

(a) Using, possessing, storing, or transporting explosives, blasting agents or explosive materials is prohibited, except pursuant to the terms and conditions of a permit. When permitted, the use, possession, storage and transportation shall be in accordance with applicable Federal and State laws.

(b) Using or possessing fireworks and firecrackers is prohibited, except pursuant to the terms and conditions of a permit or in designated areas under such conditions as the Board may establish, and in accordance with applicable State law.

(c) Violation of the conditions established by the Board or of the terms and conditions of a permit issued in accordance with this section is prohibited and may result in the suspension or revocation of the permit.

§1002.50 Special events.

(a) Sports events, pageants, regattas, public spectator attractions, entertainments, ceremonies, and similar events are allowed: Provided, however, There is a meaningful association between

the area administered by the Presidio Trust and the events, and the observance contributes to visitor understanding of the significance of the area administered by the Presidio Trust, and a permit therefor has been issued by the Executive Director. A permit shall be denied if such activities would:

(1) Cause injury or damage to resources of the area administered by the Presidio Trust; or

(2) Be contrary to the purposes of the Presidio Trust Act; or

(3) Unreasonably interfere with interpretive, visitor service, or other program activities, or with the administrative activities of the Presidio Trust or the National Park Service; or

(4) Substantially impair the operation of public use facilities or services of Presidio Trust concessioners or contractors; or

(5) Present a clear and present danger to the public health and safety; or

(6) Result in significant conflict with other existing uses.

(b) An application for such a permit shall set forth the name of the applicant, the date, time, duration, nature and place of the proposed event, an estimate of the number of persons expected to attend, a statement of equipment and facilities to be used, and any other information required by the Executive Director. The application shall be submitted so as to reach the Executive Director at least 72 hours in advance of the proposed event.

(c) As a condition of permit issuance, the Executive Director may require:

(1) The filing of a bond payable to the Presidio Trust, in an amount adequate to cover costs such as restoration, rehabilitation, and cleanup of the area used, and other costs resulting from the special event. In lieu of a bond, a permittee may elect to deposit cash equal to the amount of the required bond.

(2) In addition to the requirements of paragraph (c)(1) of this section, the acquisition of liability insurance in which the United States is named as co-insured in an amount sufficient to protect the United States.

(d) The permit may contain such conditions as are reasonably consistent with protection and use of the area administered by the Presidio Trust for the purposes of the Presidio Trust Act. It may also contain reasonable limitations on the equipment used and the time and area within which the event is allowed.

(e) Violation of the terms and conditions of a permit issued in accordance with this section is prohibited and may result in the suspension or revocation of the permit.

[63 FR 35700, June 30, 1998, as amended at 71 FR 10610, Mar. 2, 2006]

§ 1002.51 Public assemblies, meetings.

(a) Public assemblies, meetings, gatherings, demonstrations, parades and other public expressions of views are allowed within the area administered by the Presidio Trust, provided a permit therefor has been issued by the Executive Director.

(b) An application for such a permit shall set forth the name of the applicant; the date, time, duration, nature and place of the proposed event; an estimate of the number of persons expected to attend; a statement of equipment and facilities to be used and any other information required by the permit application form.

(c) The Executive Director shall, without unreasonable delay, issue a permit on proper application unless:

(1) A prior application for a permit for the same time and place has been made that has been or will be granted and the activities authorized by that permit do not reasonably allow multiple occupancy of that particular area; or

(2) It reasonably appears that the event will present a clear and present danger to the public health or safety; or

(3) The event is of such nature or duration that it cannot reasonably be accommodated in the particular location applied for, considering such things as damage to resources or facilities of the area administered by the Presidio Trust, impairment of a protected area's atmosphere of peace and tranquillity, interference with program activities, or impairment of public use facilities.

(d) If a permit is denied, the applicant shall be so informed in writing, with the reason(s) for the denial set forth.

(e) The Board shall designate on a map, that shall be available in the office of the Presidio Trust, the locations available for public assemblies. Locations may be designated as not available only if such activities would:

(1) Cause injury or damage to resources of the area administered by the Presidio Trust; or

(2) Unreasonably impair the atmosphere of peace and tranquillity maintained in wilderness, natural, historic or commemorative zones; or

(3) Unreasonably interfere with interpretive, visitor service, or other program activities, or with the administrative activities of the Presidio Trust or the National Park Service; or

(4) Substantially impair the operation of public use facilities or services of Presidio Trust concessioners or contractors; or

(5) Present a clear and present danger to the public health and safety.

(f) The permit may contain such conditions as are reasonably consistent with protection and use of the area administered by the Presidio Trust for the purposes of the Presidio Trust Act. It may also contain reasonable limitations on the equipment used and the time and area within which the event is allowed.

(g) No permit shall be issued for a period in excess of 7 days, provided that permits may be extended for like periods, upon a new application, unless another applicant has requested use of the same location and multiple occupancy of that location is not reasonably possible.

(h) It is prohibited for persons engaged in activities covered under this section to obstruct or impede pedestrians or vehicles, or harass visitors with physical contact.

(i) A permit may be revoked under any of those conditions, as listed in paragraph (c) of this section, that constitute grounds for denial of a permit, or for violation of the terms and conditions of the permit. Such a revocation shall be made in writing, with the reason(s) for revocation clearly set forth, except under emergency circumstances, when an immediate verbal revocation or suspension may be made to be followed by written confirmation within 72 hours.

(j) Violation of the terms and conditions of a permit issued in accordance with this section may result in the suspension or revocation of the permit.

[63 FR 35700, June 30, 1998, as amended at 71 FR 10610, Mar. 2, 2006]

§ 1002.52 Sale or distribution of printed matter.

(a) The sale or distribution of printed matter is allowed within the area administered by the Presidio Trust, provided that a permit to do so has been issued by the Executive Director, and provided further that the printed matter is not solely commercial advertising.

(b) An application for such a permit shall set forth the name of the applicant; the name of the organization (if any); the date, time, duration, and location of the proposed sale or distribution; the number of participants; and any other information required by the permit application form.

(c) The Executive Director shall, without unreasonable delay, issue a permit on proper application unless:

(1) A prior application for a permit for the same time and location has been made that has been or will be granted and the activities authorized by that permit do not reasonably allow multiple occupancy of the particular area; or

(2) It reasonably appears that the sale or distribution will present a clear and present danger to the public health and safety; or

(3) The number of persons engaged in the sale or distribution exceeds the number that can reasonably be accommodated in the particular location applied for, considering such things as damage to resources or facilities of the area administered by the Presidio Trust, impairment of a protected area's atmosphere of peace and tranquillity, interference with program activities, or impairment of public use facilities; or

(4) The location applied for has not been designated as available for the sale or distribution of printed matter; or

(5) The activity would constitute a violation of an applicable law or regulation.

(d) If a permit is denied, the applicant shall be so informed in writing, with the reason(s) for the denial set forth.

(e) The Board shall designate on a map, which shall be available for inspection in the office of the Presidio Trust, the locations within the area administered by the Presidio Trust that are available for the sale or distribution of printed matter. Locations may be designated as not available only if the sale or distribution of printed matter would:

(1) Cause injury or damage to resources of the area administered by the Presidio Trust; or

(2) Unreasonably impair the atmosphere of peace and tranquillity maintained in wilderness, natural, historic, or commemorative zones; or

(3) Unreasonably interfere with interpretive, visitor service, or other program activities, or with the administrative activities of the Presidio Trust or the National Park Service; or

(4) Substantially impair the operation of public use facilities or services of Presidio Trust concessioners or contractors; or

(5) Present a clear and present damage to the public health and safety.

(f) The permit may contain such conditions as are reasonably consistent with protection and use of the area administered by the Presidio Trust for the purposes of the Presidio Trust Act.

(g) No permit shall be issued for a period in excess of 14 consecutive days, provided that permits may be extended for like periods, upon a new application, unless another applicant has requested use of the same location and multiple occupancy of that location is not reasonably possible.

(h) It is prohibited for persons engaged in the sale or distribution of printed matter under this section to obstruct or impede pedestrians or vehicles, harass visitors with physical contact or persistent demands, misrepresent the purposes or affiliations of those engaged in the sale or distribution, or misrepresent whether the printed matter is available without cost or donation.

(i) A permit may be revoked under any of those conditions, as listed in paragraph (c) of this section, that constitute grounds for denial of a permit, or for violation of the terms and conditions of the permit. Such a revocation shall be made in writing, with the reason(s) for revocation clearly set forth, except under emergency circumstances, when an immediate verbal revocation or suspension may be made, to be followed by written confirmation within 72 hours.

(j) Violation of the terms and conditions of a permit issued in accordance with this section may result in the suspension or revocation of the permit.

§ 1002.60 Livestock use and agriculture.

(a) The running-at-large, herding, driving across, allowing on, pasturing or grazing of livestock of any kind within the area administered by the Presidio Trust or the use of such area for agricultural purposes is prohibited, except:

(1) As specifically authorized by Federal statutory law; or

(2) As required under a reservation of use rights arising from acquisition of a tract of land; or

(3) As designated, when conducted as a necessary and integral part of a recreational activity or required in order to maintain a historic scene.

(b) Activities authorized pursuant to any of the exceptions provided for in paragraph (a) of this section shall be allowed only pursuant to the terms and conditions of a license, permit or lease. Violation of the terms and conditions of a license, permit or lease issued in accordance with this paragraph is prohibited and may result in the suspension or revocation of the license, permit, or lease.

(c) *Impounding of livestock.* (1) Livestock trespassing within the area administered by the Presidio Trust may be impounded by the Executive Director and, if not claimed by the owner within the periods specified in this paragraph, shall be disposed of in accordance with applicable Federal and State law.

(2) In the absence of applicable Federal or State law, the livestock shall be disposed of in the following manner:

(i) If the owner is known, prompt written notice of impoundment will be served, and in the event of the owner's

failure to remove the impounded livestock within five (5) days from delivery of such notice, it will be disposed of in accordance with this paragraph.

(ii) If the owner is unknown, disposal of the livestock shall not be made until at least fifteen (15) days have elapsed from the date that a notice of impoundment is originally published in a newspaper of general circulation in the county in which the trespass occurs or, if no such newspaper exists, notification is provided by other appropriate means.

(iii) The owner may redeem the livestock by submitting proof of ownership and paying all expenses of the United States for capturing, advertising, pasturing, feeding, impounding, and the amount of damage to public property injured or destroyed as a result of the trespass.

(iv) In determining the claim of the government in a livestock trespass, the value of forage consumed shall be computed at the commercial rates prevailing in the locality for the class of livestock found in trespass. The claim shall include the pro rata salary of employees for the time spent and the expenses incurred as a result of the investigation, reporting, and settlement or prosecution of the claim.

(v) If livestock impounded under this paragraph is offered at public sale and no bid is received, or if the highest bid received is less than the amount of the claim of the United States or of the officer's appraised value of the livestock, whichever is the lesser amount, such livestock, may be sold at private sale for the highest amount obtainable, condemned and destroyed, or converted to the use of the United States.

§ 1002.61 Residing on Federal lands.

(a) Residing within the area administered by the Presidio Trust, other than on privately owned lands, except pursuant to the terms and conditions of a permit, lease or contract, is prohibited.

(b) Violation of the terms and conditions of a permit issued in accordance with this section is prohibited and may result in the suspension or revocation of the permit.

§ 1002.62 Memorialization.

(a) The installation of a monument, memorial, tablet, structure, or other commemorative installation within the area administered by the Presidio Trust without the authorization of the Board is prohibited.

(b) The scattering of human ashes from cremation is prohibited, except pursuant to the terms and conditions of a permit, or in designated areas according to conditions which may be established by the Board.

(c) Failure to abide by area designations and established conditions is prohibited.

(d) Violation of the terms and conditions of a permit issued in accordance with this section is prohibited and may result in the suspension or revocation of the permit.

§ 1002.63 Boating and water use activities.

Swimming, boating and the use of any water vessel are prohibited within the area administered by the Presidio Trust.

PART 1004—VEHICLES AND TRAFFIC SAFETY

Sec.

1004.1 Applicability and scope.
1004.2 State law applicable.
1004.3 Authorized emergency vehicles.
1004.4 Report of motor vehicle accident.
1004.10 Travel on Presidio Trust roads and designated routes.
1004.11 Load, weight and size limits.
1004.12 Traffic control devices.
1004.13 Obstructing traffic.
1004.14 Open container of alcoholic beverage.
1004.15 Safety belts.
1004.20 Right of way.
1004.21 Speed limits.
1004.22 Unsafe operation.
1004.23 Operating under the influence of alcohol or drugs.
1004.30 Bicycles.
1004.31 Hitchhiking.

AUTHORITY: Pub. L. 104–333, 110 Stat. 4097 (16 U.S.C. 460bb note).

SOURCE: 63 FR 35708, June 30, 1998, unless otherwise noted.

§ 1004.1 Applicability and scope.

The applicability of the regulations in this part is described in § 1001.2 of

this chapter. The regulations in this part also apply, regardless of land ownership, on all roadways and parking areas within the boundaries of the area administered by the Presidio Trust that are open to public traffic and that are under the legislative jurisdiction of the United States.

§ 1004.2 State law applicable.

(a) Unless specifically addressed by regulations in this chapter, traffic and the use of vehicles within the boundaries of the area administered by the Presidio Trust are governed by State law. State law that is now or may later be in effect is adopted and made a part of the regulations in this part.

(b) Violating a provision of State law is prohibited.

§ 1004.3 Authorized emergency vehicles.

(a) The operator of an authorized emergency vehicle, when responding to an emergency or when pursuing or apprehending an actual or suspected violator of the law, may:

(1) Disregard traffic control devices;

(2) Exceed the speed limit; and

(3) Obstruct traffic.

(b) The provisions of paragraph (a) of this section do not relieve the operator from the duty to operate with due regard for the safety of persons and property.

§ 1004.4 Report of motor vehicle accident.

(a) The operator of a motor vehicle involved in an accident resulting in property damage, personal injury or death shall report the accident to the Executive Director as soon as practicable, but within 24 hours of the accident. If the operator is physically incapable of reporting the accident, an occupant of the vehicle shall report the accident to the Executive Director.

(b) A person shall not tow or move a vehicle that has been involved in an accident without first notifying the Executive Director unless the position of the vehicle constitutes a hazard or prior notification is not practicable, in which case notification shall be made before the vehicle is removed from the area administered by the Presidio Trust.

(c) Failure to comply with a reporting requirement specified in paragraph (a) or (b) of this section is prohibited.

(d) The notification requirements imposed by this section do not relieve the operator and occupants of a motor vehicle involved in an accident of the responsibility to satisfy reporting requirements imposed by State law.

§ 1004.10 Travel on Presidio Trust roads and designated routes.

(a) Operating a motor vehicle is prohibited except on Presidio Trust roads and in parking areas.

(b) The following are prohibited:

(1) Operating a motor vehicle not equipped with pneumatic tires, except that a track-laying motor vehicle or a motor vehicle equipped with a similar traction device may be operated on a route designated for these vehicles by the Board.

(2) Operating a motor vehicle in a manner that causes unreasonable damage to the surface of a Presidio Trust road or route.

§ 1004.11 Load, weight and size limits.

(a) Vehicle load, weight and size limits established by State law apply to a vehicle operated on a Presidio Trust road. However, the Board may designate more restrictive limits when appropriate for traffic safety or protection of the road surface. The Board may require a permit and establish conditions for the operation of a vehicle exceeding designated limits.

(b) The following are prohibited:

(1) Operating a vehicle that exceeds a load, weight or size limit designated by the Board.

(2) Failing to obtain a permit when required.

(3) Violating a term or condition of a permit.

(4) Operating a motor vehicle with an auxiliary detachable side mirror that extends more than 10 inches beyond the side fender line except when the motor vehicle is towing a second vehicle.

(c) Violating a term or condition of a permit may also result in the suspension or revocation of the permit by the Executive Director.

§ 1004.12 Traffic control devices.

Failure to comply with the directions of a traffic control device is prohibited unless otherwise directed by the Executive Director.

§ 1004.13 Obstructing traffic.

The following are prohibited:

(a) Stopping or parking a vehicle upon a Presidio Trust road, except as authorized by the Executive Director, or in the event of an accident or other condition beyond the control of the operator.

(b) Operating a vehicle so slowly as to interfere with the normal flow of traffic.

§ 1004.14 Open container of alcoholic beverage.

(a) Each person within a motor vehicle is responsible for complying with the provisions of this section that pertain to carrying an open container. The operator of a motor vehicle is the person responsible for complying with the provisions of this section that pertain to the storage of an open container.

(b) Carrying or storing a bottle, can or other receptacle containing an alcoholic beverage that is open, or has been opened, or whose seal is broken or the contents of which have been partially removed, within a motor vehicle in the area administered by the Presidio Trust is prohibited.

(c) This section does not apply to:

(1) An open container stored in the trunk of a motor vehicle or, if a motor vehicle is not equipped with a trunk, to an open container stored in some other portion of the motor vehicle designed for the storage of luggage and not normally occupied by or readily accessible to the operator or passengers; or

(2) An open container stored in the living quarters of a motor home or camper; or

(3) Unless otherwise prohibited, an open container carried or stored in a motor vehicle parked at an authorized campsite where the motor vehicle's occupant(s) are camping.

(d) For the purpose of paragraph (c)(1) of this section, a utility compartment or glove compartment is deemed to be readily accessible to the operator and passengers of a motor vehicle.

§ 1004.15 Safety belts.

(a) Each operator and passenger occupying any seating position of a motor vehicle in the area administered by the Presidio Trust will have the safety belt or child restraint system properly fastened at all times when the vehicle is in motion. The safety belt and child restraint system will conform to applicable United States Department of Transportation standards.

(b) This section does not apply to an occupant in a seat that was not originally equipped by the manufacturer with a safety belt nor does it apply to a person who can demonstrate that a medical condition prevents restraint by a safety belt or other occupant restraining device.

§ 1004.20 Right of way.

An operator of a motor vehicle shall yield the right of way to pedestrians, saddle and pack animals and vehicles drawn by animals. Failure to yield the right of way is prohibited.

§ 1004.21 Speed limits.

(a) Speed limits in the area administered by the Presidio Trust are as follows:

(1) 15 miles per hour: within all school zones, campgrounds, picnic areas, parking areas, utility areas, business or residential areas, other places of public assemblage and at emergency scenes.

(2) 25 miles per hour: upon sections of Presidio Trust road under repair or construction.

(3) 45 miles per hour: upon all other Presidio Trust roads.

(b) The Board may designate a different speed limit upon any Presidio Trust road when a speed limit set forth in paragraph (a) of this section is determined to be unreasonable, unsafe or inconsistent with the purposes of the Presidio Trust Act. Speed limits shall be posted by using standard traffic control devices.

(c) Operating a vehicle at a speed in excess of the speed limit is prohibited.

(d) An authorized person may utilize radiomicrowaves or other electrical devices to determine the speed of a vehicle on a Presidio Trust road. Signs indicating that vehicle speed is determined by the use of radiomicrowaves

or other electrical devices are not required.

§ 1004.22 Unsafe operation.

(a) The elements of this section constitute offenses that are less serious than reckless driving. The offense of reckless driving is defined by State law and violations are prosecuted pursuant to the provisions of § 1004.2.

(b) The following are prohibited:

(1) Operating a motor vehicle without due care or at a speed greater than that which is reasonable and prudent considering wildlife, traffic, weather, road and light conditions and road character.

(2) Operating a motor vehicle in a manner which unnecessarily causes its tires to squeal, skid or break free of the road surface.

(3) Failing to maintain that degree of control of a motor vehicle necessary to avoid danger to persons, property or wildlife.

(4) Operating a motor vehicle while allowing a person to ride:

(i) On or within any vehicle, trailer or other mode of conveyance towed behind the motor vehicle unless specifically designed for carrying passengers while being towed; or

(ii) On any exterior portion of the motor vehicle not designed or intended for the use of a passenger. This restriction does not apply to a person seated on the floor of a truck bed equipped with sides, unless prohibited by State law.

§ 1004.23 Operating under the influence of alcohol or drugs.

(a) Operating or being in actual physical control of a motor vehicle is prohibited while:

(1) Under the influence of alcohol, or a drug, or drugs, or any combination thereof, to a degree that renders the operator incapable of safe operation; or

(2) The alcohol concentration in the operator's blood or breath is 0.10 grams or more of alcohol per 100 milliliters of blood or 0.10 grams or more of alcohol per 210 liters of breath. Provided however, that if State law that applies to operating a motor vehicle while under the influence of alcohol establishes more restrictive limits of alcohol concentration in the operator's blood or breath, those limits supersede the limits specified in this paragraph.

(b) The provisions of paragraph (a) of this section also apply to an operator who is or has been legally entitled to use alcohol or another drug.

(c) *Tests.* (1) At the request or direction of an authorized person who has probable cause to believe that an operator of a motor vehicle within the area administered by the Presidio Trust has violated a provision of paragraph (a) of this section, the operator shall submit to one or more tests of the blood, breath, saliva or urine for the purpose of determining blood alcohol and drug content.

(2) Refusal by an operator to submit to a test is prohibited and proof of refusal may be admissible in any related judicial proceeding.

(3) Any test or tests for the presence of alcohol and drugs shall be determined by and administered at the direction of an authorized person.

(4) Any test shall be conducted by using accepted scientific methods and equipment of proven accuracy and reliability operated by personnel certified in its use.

(d) *Presumptive levels.* (1) The results of chemical or other quantitative tests are intended to supplement the elements of probable cause used as the basis for the arrest of an operator charged with a violation of paragraph (a)(1) of this section. If the alcohol concentration in the operator's blood or breath at the time of testing is less than alcohol concentrations specified in paragraph (a)(2) of this section, this fact does not give rise to any presumption that the operator is or is not under the influence of alcohol.

(2) The provisions of paragraph (d)(1) of this section are not intended to limit the introduction of any other competent evidence bearing upon the question of whether the operator, at the time of the alleged violation, was under the influence of alcohol, or a drug, or drugs, or any combination thereof.

§ 1004.30 Bicycles.

(a) The use of a bicycle is prohibited except on Presidio Trust roads, in parking areas and on routes designated for bicycle use; provided, however, that

the Board may close any Presidio Trust road or parking area to bicycle use pursuant to the criteria and procedures of §§ 1001.5 and 1001.7 of this chapter. Routes may only be designated for bicycle use based on a written determination that such use is consistent with the protection of natural, scenic and aesthetic values, safety considerations and management objectives and will not disturb wildlife or the resources of the area administered by the Presidio Trust.

(b) *Designated bicycle routes.* The use of a bicycle is permitted in non-developed areas, as follows:

(1) Bicycle use is permitted on routes which have been designated by the Board as bicycle routes by the posting of signs, and as designated on maps which are available in the office of the Presidio Trust and other places convenient to the public.

(2) Bicycle speed limits are as follows:

(i) 15 miles per hour: Upon all designated routes within the area administered by the Presidio Trust.

(ii) 5 miles per hour: On blind curves and when passing other trail users.

(3) The following are prohibited:

(i) The possession of a bicycle on routes not designated as open to bicycle use.

(ii) Operating a bicycle on designated bicycle routes between sunset and sunrise without exhibiting on the bicycle or on the operator an activated white light that is visible from a distance of at least 500 feet to the front and with a red light or reflector visible from at least 200 feet to the rear.

(c) A person operating a bicycle is subject to all sections of this part that apply to an operator of a motor vehicle, except §§ 1004.4, 1004.10, 1004.11 and 1004.14.

(d) The following are prohibited:

(1) Possessing a bicycle in a wilderness area established by Federal statute.

(2) Operating a bicycle during periods of low visibility, or while traveling through a tunnel, or between sunset and sunrise, without exhibiting on the operator or bicycle a white light or reflector that is visible from a distance of at least 500 feet to the front and with a red light or reflector visible from at least 200 feet to the rear.

(3) Operating a bicycle abreast of another bicycle except where authorized by the Executive Director.

(4) Operating a bicycle while consuming an alcoholic beverage or carrying in hand an open container of an alcoholic beverage.

§ 1004.31 Hitchhiking.

Hitchhiking or soliciting transportation is prohibited except in designated areas and under conditions established by the Board.

PART 1005—COMMERCIAL AND PRIVATE OPERATIONS

Sec.

1005.1 Advertisements.
1005.2 Alcoholic beverages; sale of intoxicants.
1005.3 Business operations.
1005.4 Commercial passenger-carrying motor vehicles.
1005.5 Commercial photography.
1005.6 Commercial vehicles.
1005.7 Construction of buildings or other facilities.
1005.8 Discrimination in employment practices.
1005.9 Discrimination in furnishing public accommodations and transportation services.
1005.10–1005.12 [Reserved]
1005.13 Nuisances.
1005.14 Prospecting, mining, and mineral leasing.

AUTHORITY: Pub. L. 104–333, 110 Stat. 4097 (16 U.S.C. 460bb note).

SOURCE: 63 FR 35710, June 30, 1998, unless otherwise noted.

§ 1005.1 Advertisements.

Commercial notices or advertisements shall not be displayed, posted, or distributed within the area administered by the Presidio Trust unless prior written permission has been given by the Executive Director. Such permission may be granted only if the notice or advertisement is of goods, services, or facilities available within the area administered by the Presidio Trust and such notices and advertisements are found by the Executive Director to be desirable and necessary for the convenience and guidance of the public.

§ 1005.2 Alcoholic beverages; sale of intoxicants.

The sale of alcoholic, spirituous, vinous, or fermented liquor, containing more than 1 percent of alcohol by weight, shall conform with all applicable Federal, State, and local laws and regulations. (See also § 1002.35 of this chapter.)

§ 1005.3 Business operations.

Engaging in or soliciting any business in the area administered by the Presidio Trust, except in accordance with the provisions of a permit, contract, or other written agreement with the United States, is prohibited.

§ 1005.4 Commercial passenger-carrying motor vehicles.

Passenger-carrying motor vehicles that are so large as to require special escort in order to proceed safely over Presidio Trust roads, or which in the judgment of the Executive Director are beyond the carrying capacity or safety factor of the roads, will not be permitted in the area administered by the Presidio Trust, except that, where they may satisfactorily enter and travel to the Presidio Trust headquarters they may be parked there during the period of stay.

§ 1005.5 Commercial photography.

(a) *Motion pictures, television.* Before any motion picture may be filmed or any television production or sound track may be made, which involves the use of professional casts, settings, or crews, by any person other than bona fide newsreel or news television personnel, written permission must first be obtained from the Executive Director, in accordance with the following:

(1) *Permit required.* No picture may be filmed, and no television production or sound track made on any area administered by the Presidio Trust, by any person other than amateur or bona fide newsreel and news television photographers and soundmen, unless written permission has been obtained from the Presidio Trust. Applications for permission should be submitted to the Executive Director.

(2) *Fees; bonds.* (i) No fees will be charged for the making of motion pictures, television productions or sound tracks on areas administered by the Presidio Trust. The regular general admission and other fees currently in effect in any area under the jurisdiction of the Presidio Trust are not affected by this paragraph.

(ii) A bond shall be furnished, or deposit made in cash or by certified check, in an amount to be set by the official in charge of the area to insure full compliance with all of the conditions prescribed in paragraph (a)(4) of this section.

(3) *Approval of application.* Permission to make a motion picture, television production or sound track on areas administered by the Presidio Trust will be granted by the Executive Director in his discretion and on acceptance by the applicant of the conditions set forth in paragraph (a)(4) of this section.

(4) *Form of application.* The following form is prescribed for an application for permission to make a motion picture, television production, or sound track on areas administered by the Presidio Trust:

Date _____

To the Executive Director of the Presidio Trust:

Permission is requested to make, in the area administered by the Presidio Trust, a

_____

The scope of the filming (or production or recording) and the manner and extent thereof will be as follows:

_____

_____

Weather conditions permitting, work will commence on approximately _____ and will be completed on approximately _____. (An additional sheet should be used if necessary.)

The undersigned accepts and will comply with the following conditions:

Utmost care will be exercised to see that no natural features are injured, and after completion of the work the area will, as required by the official in charge, either be cleaned up and restored to its prior condition or left, after clean-up, in a condition satisfactory to the official in charge.

Credit will be given to the Presidio Trust through the use of an appropriate title or announcement, unless there is issued by the official in charge of the area a written statement that no such courtesy credit is desired.

Pictures will be taken of wildlife only when such wildlife will be shown in its natural state or under approved management conditions if such wildlife is confined.

Any special instructions received from the official in charge of the area will be complied with.

Any additional information relating to the privilege applied for by this application will be furnished upon request of the official in charge.

_____
(Applicant)

For _____
(Company)

Bond Requirement $ _____

Approved:

_____
(Date)

_____
(Title)

(b) *Still photography*. The taking of photographs of any vehicle, or other articles of commerce or models for the purpose of commercial advertising without a written permit from the Executive Director is prohibited.

§ 1005.6 Commercial vehicles.

(a) The term ''Commercial vehicle'' as used in this section shall include, but not be limited to trucks, station wagons, pickups, passenger cars or other vehicles when used in transporting movable property for a fee or profit, either as a direct charge to another person, or otherwise, or used as an incident to providing services to another person, or used in connection with any business.

(b) The use of government roads within the area administered by the Presidio Trust by commercial vehicles, when such use is in no way connected with the operation of the area administered by the Presidio Trust, is prohibited, except that in emergencies the Executive Director may grant permission to use Presidio Trust roads.

(c) The Executive Director shall issue permits for commercial vehicles used on Presidio Trust roads when such use is necessary for access to private lands situated within or adjacent to the area administered by the Presidio Trust, to which access is otherwise not available.

§ 1005.7 Construction of buildings or other facilities.

Constructing or attempting to construct a building, or other structure, boat dock, road, trail, path, or other way, telephone line, telegraph line, power line, or any other private or public utility, upon, across, over, through, or under any area administered by the Presidio Trust, except in accordance with the provisions of a valid permit, contract, or other written agreement with the United States, is prohibited.

§ 1005.8 Discrimination in employment practices.

(a) The proprietor, owner, or operator of any hotel, inn, lodge or other facility or accommodation offered to or enjoyed by the general public within the area administered by the Presidio Trust is prohibited from discriminating against any employee or maintaining any employment practice which discriminates because of race, creed, color, ancestry, sex, age, disabling condition, or national origin in connection with any activity provided for or permitted by contract with or permit from the Government or by derivative subcontract or sublease. As used in this section, the term ''employment'' includes, but is not limited to, employment, upgrading, demotion, or transfer; recruitment, or recruitment advertising; layoffs or termination; rates of pay or other forms of compensation; and selection for training including apprenticeship.

(b) Each such proprietor, owner or operator shall post either the following notice or notices supplied in accordance with Executive Order 11246 at such locations as will ensure that the notice and its contents will be conspicuous to any person seeking employment:

Notice

This is a facility operated in an area under the jurisdiction of the Presidio Trust. No discrimination in employment practices on the basis of race, creed, color, ancestry, sex, age, disabling condition, or national origin is permitted in this facility. Violations of this prohibition are punishable by fine, imprisonment, or both. Complaints or violations of this prohibition should be addressed to the Executive Director, The Presidio Trust, P.O. Box 29052, San Francisco, CA 94129–0052.

(c) The regulations contained in this section apply, regardless of land ownership, on all lands and waters within the boundaries of the area administered by the Presidio Trust that are under the

legislative jurisdiction of the United States.

§ 1005.9 Discrimination in furnishing public accommodations and transportation services.

(a) The proprietor, owner or operator and the employees of any hotel, inn, lodge, or other facility or accommodation offered to or enjoyed by the general public within the area administered by the Presidio Trust and, while using such area, any commercial passenger-carrying motor vehicle service and its employees, are prohibited from:

(1) Publicizing the facilities, accommodations or any activity conducted therein in any manner that would directly or inferentially reflect upon or question the acceptability of any person or persons because of race, creed, color, ancestry, sex, age, disabling condition, or national origin; or

(2) Discriminating by segregation or otherwise against any person or persons because of race, creed, color, ancestry, sex, age, disabling condition, or national origin in furnishing or refusing to furnish such person or persons any accommodation, facility, service, or privilege offered to or enjoyed by the general public.

(b) Each such proprietor, owner, or operator shall post the following notice at such locations as will insure that the notice and its contents will be conspicuous to any person seeking accommodations, facilities, services, or privileges:

Notice

This is a facility operated in an area under the jurisdiction of the Presidio Trust. No discrimination by segregation or other means in the furnishing of accommodations, facilities, services, or privileges on the basis of race, creed, color, ancestry, sex, age, disabling condition or national origin is permitted in the use of this facility. Violations of this prohibition are punishable by fine, imprisonment, or both. Complaints of violations of this prohibition should be addressed to the Executive Director, The Presidio Trust, P.O. Box 29052, San Francisco, CA 94129–0052.

(c) The regulations contained in this section apply, regardless of land ownership, on all lands and waters within the boundaries of the area administered by the Presidio Trust that are under the legislative jurisdiction of the United States.

§§ 1005.10–1005.12 [Reserved]

§ 1005.13 Nuisances.

The creation or maintenance of a nuisance upon the federally owned lands of the area administered by the Presidio Trust or upon any private lands within the boundaries of the area administered by the Presidio Trust under the exclusive legislative jurisdiction of the United States is prohibited.

§ 1005.14 Prospecting, mining, and mineral leasing.

Prospecting, mining, and the location of mining claims under the general mining laws and leasing under the mineral leasing laws are prohibited in the area administered by the Presidio Trust except as authorized by law.

PART 1007—REQUESTS UNDER THE FREEDOM OF INFORMATION ACT

Sec.

1007.1 Purpose and scope.
1007.2 Records available.
1007.3 Requests for records.
1007.4 Preliminary processing of requests.
1007.5 Action on initial requests.
1007.6 Time limits for processing initial requests.
1007.7 Appeals.
1007.8 Action on appeals.
1007.9 Fees.
1007.10 Waiver of fees.

AUTHORITY: Pub. L. 104–333, 110 Stat. 4097 (16 U.S.C. 460bb note); 5 U.S.C. 552; E.O. 12,600, 52 FR 23781, 3 CFR, 1988 Comp., p. 235.

SOURCE: 63 FR 71774, Dec. 30, 1998, unless otherwise noted.

§ 1007.1 Purpose and scope.

(a) This part contains the procedures for submission to and consideration by the Presidio Trust of requests for records under FOIA. As used in this part, the term ''FOIA'' means the Freedom of Information Act, 5 U.S.C. 552.

(b) Before invoking the formal procedures set out below, persons seeking records from the Presidio Trust may find it useful to consult with the Presidio Trust's FOIA Officer, who can be reached at The Presidio Trust, P.O. Box 29052, San Francisco, CA 94129–0052, Telephone: (415) 561–5300. As used in

this part, the term ''FOIA Officer'' means the employee designated by the Executive Director to process FOIA requests and otherwise supervise the Presidio Trust's compliance with FOIA, or the alternate employee so designated to perform these duties in the absence of the FOIA Officer.

(c) The procedures in this part do not apply to:

(1) Records published in the FEDERAL REGISTER, the Bylaws of the Presidio Trust, statements of policy and interpretations, and other materials that have been published by the Presidio Trust on its internet website (*http://www.presidiotrust.gov*) or are routinely made available for inspection and copying at the requester's expense.

(2) Records or information compiled for law enforcement purposes and covered by the disclosure exemption described in § 1007.2(c)(7) if:

(i) The investigation or proceeding involves a possible violation of criminal law; and

(ii) There is reason to believe that:

(A) The subject of the investigation or proceeding is not aware of its pendency, and

(B) Disclosure of the existence of the records could reasonably be expected to interfere with enforcement proceedings.

(3) Informant records maintained by the United States Park Police under an informant's name or personal identifier, if requested by a third party according to the informant's name or personal identifier, unless the informant's status as an informant has been officially confirmed.

§ 1007.2 Records available.

(a) *Policy*. It is the policy of the Presidio Trust to make its records available to the public to the greatest extent possible consistent with the purposes of the Presidio Trust Act and the Freedom of Information Act.

(b) *Statutory disclosure requirement*. FOIA requires that the Presidio Trust, on a request from a member of the public submitted in accordance with the procedures in this part, make requested records available for inspection and copying.

(c) *Statutory exemptions*. Exempted from FOIA's statutory disclosure requirement are matters that are:

(1)(i) Specifically authorized under criteria established by an Executive order to be kept secret in the interest of national defense or foreign policy and

(ii) Are in fact properly classified pursuant to such Executive order;

(2) Related solely to the internal personnel rules and practices of an agency;

(3) Specifically exempted from disclosure by statute (other than the Privacy Act), provided that such statute:

(i) Requires that the matters be withheld from the public in such a manner as to leave no discretion on the issue, or

(ii) Establishes particular criteria for withholding or refers to particular types of matters to be withheld;

(4) Trade secrets and commercial or financial information obtained from a person and privileged or confidential;

(5) Inter-agency or intra-agency memorandums or letters which would not be available by law to a party other than an agency in litigation with the agency;

(6) Personnel and medical files and similar files the disclosure of which would constitute a clearly unwarranted invasion of personal privacy;

(7) Records or information compiled for law enforcement purposes, but only to the extent that the production of such law enforcement records or information:

(i) Could reasonably be expected to interfere with enforcement proceedings,

(ii) Would deprive a person of a right to a fair or an impartial adjudication,

(iii) Could reasonably be expected to constitute an unwarranted invasion of personal privacy,

(iv) Could reasonably be expected to disclose the identity of a confidential source, including a State, local, or foreign agency or authority or any private institution which furnished information on a confidential basis, and, in the case of a record or information compiled by a criminal law enforcement authority in the course of a criminal investigation, or by an agency conducting a lawful national security

intelligence investigation, information furnished by a confidential source,

(v) Would disclose techniques and procedures for law enforcement investigations or prosecutions or would disclose guidelines for law enforcement investigations or prosecutions if such disclosure could reasonably be expected to risk circumvention of the law, or

(vi) Could reasonably be expected to endanger the life or physical safety of any individual;

(8) Contained in or related to examination, operating, or condition reports prepared by, on behalf of, or for the use of an agency responsible for the regulation or supervision of financial institutions; or

(9) Geological and geophysical information and data, including maps, concerning wells.

(d) *Decisions on requests.* It is the policy of the Presidio Trust to withhold information falling within an exemption only if:

(1) Disclosure is prohibited by statute or Executive order or

(2) Sound grounds exist for invocation of the exemption.

(e) *Disclosure of reasonably segregable nonexempt material.* If a requested record contains material covered by an exemption and material that is not exempt, and it is determined under the procedures in this part to withhold the exempt material, any reasonably segregable nonexempt material shall be separated from the exempt material and released. In such circumstances, the records disclosed in part shall be marked or annotated to show both the amount and the location of the information deleted wherever practicable.

§ 1007.3 Requests for records.

(a) *Submission of requests.* A request to inspect or copy records shall be submitted to the Presidio Trust's FOIA Officer at P.O. Box 29052, San Francisco, CA 94129–0052.

(b) *Form of requests.* (1) Requests under this part shall be in writing and must specifically invoke FOIA.

(2) A request must reasonably describe the records requested. A request reasonably describes the records requested if it will enable an employee of the Presidio Trust familiar with the subject area of the request to locate the record with a reasonable amount of effort. If such information is available, the request should identify the subject matter of the record, the date when it was made, the place where it was made, the person or office that made it, the present custodian of the record, and any other information that will assist in locating the requested record. If the request involves a matter known by the requester to be in litigation, the request should also state the case name and court hearing the case.

(3)(i) A request shall:

(A) Specify the fee category (commercial use, educational institution, noncommercial scientific institution, news media, or other, as defined in § 1007.9 of this chapter) in which the requester claims the request falls and the basis of this claim; and

(B) State the maximum amount of fees that the requester is willing to pay or include a request for a fee waiver.

(ii) Requesters are advised that, under § 1007.9 (f), (g) and (h), the time for responding to requests may be delayed:

(A) If a requester has not sufficiently identified the fee category applicable to the request;

(B) If a requester has not stated a willingness to pay fees as high as anticipated by the Presidio Trust; or

(C) If a fee waiver request is denied and the requester has not included an alternative statement of willingness to pay fees as high as anticipated by the Presidio Trust.

(4) A request seeking a fee waiver shall, to the extent possible, address why the requester believes that the criteria for fee waivers set out in § 1007.10 are met.

(5) To expedite processing, both the envelope containing a request and the face of the request should bear the legend ''FREEDOM OF INFORMATION REQUEST.''

(c) *Creation of records.* A request may seek only records that are in existence at the time the request is received. A request may not seek records that come into existence after the date on which it is received and may not require that new records be created in response to the request by, for example, combining or compiling selected items

from manual files, preparing a new computer program, or calculating proportions, percentages, frequency distributions, trends or comparisons. In those instances where the Presidio Trust determines that creating a new record will be less burdensome than disclosing large volumes of unassembled material, the Presidio Trust may, in its discretion, agree to creation of a new record as an alternative to disclosing existing records.

§ 1007.4 Preliminary processing of requests.

(a) *Scope of requests.* Unless a request clearly specifies otherwise, requests to the Presidio Trust may be presumed to seek only records of the Presidio Trust.

(b) *Records of other departments and agencies.* (1) If a requested record in the possession of the Presidio Trust originated with another Federal department or agency, the request shall be referred to that agency unless:

(i) The record is of primary interest to the Presidio Trust, for example, because it was developed or prepared pursuant to the Presidio Trust's regulations or request,

(ii) The Presidio Trust is in a better position than the originating agency to assess whether the record is exempt from disclosure, or

(iii) The originating agency is not subject to FOIA.

(2) A request for documents that were classified by another agency shall be referred to that agency.

(c) *Consultation with submitters of commercial and financial information.* (1) If a request seeks a record containing trade secrets or commercial or financial information submitted by a person outside of the Federal government, the Presidio Trust shall provide the submitter with notice of the request whenever:

(i) The submitter has made a good faith designation of the information as commercially or financially sensitive, or

(ii) The Presidio Trust has reason to believe that disclosure of the information may result in commercial or financial injury to the submitter.

(2) Where notification of a voluminous number of submitters is required, such notification may be accomplished by posting or publishing the notice in a place reasonably calculated to accomplish notification.

(3) The notice to the submitter shall afford the submitter a reasonable period within which to provide a detailed statement of any objection to disclosure. The submitter's statement shall explain the basis on which the information is claimed to be exempt under FOIA, including a specification of any claim of competitive or other business harm that would result from disclosure. The statement shall also include a certification that the information is confidential, has not been disclosed to the public by the submitter, and is not routinely available to the public from other sources.

(4) If a submitter's statement cannot be obtained within the time limit for processing the request under § 1007.6, the requester shall be notified of the delay as provided in § 1007.6(f).

(5) Notification to a submitter is not required if:

(i) The Presidio Trust determines, prior to giving notice, that the request for the record should be denied;

(ii) The information has previously been lawfully published or officially made available to the public;

(iii) Disclosure is required by a statute (other than FOIA) or regulation (other than this part);

(iv) Disclosure is clearly prohibited by a statute, as described in § 1007.2(c)(3);

(v) The information was not designated by the submitter as confidential when it was submitted, or a reasonable time thereafter, if the submitter was specifically afforded an opportunity to make such a designation; however, a submitter will be notified of a request for information that was not designated as confidential at the time of submission, or a reasonable time thereafter, if there is substantial reason to believe that disclosure of the information would result in competitive harm;

(vi) The designation of confidentiality made by the submitter is obviously frivolous; or

(vii) The information was submitted to the Presidio Trust more than 10 years prior to the date of the request, unless the Presidio Trust has reason to

believe that it continues to be confidential.

(6) If a requester brings suit to compel disclosure of information, the submitter of the information will be promptly notified.

§ 1007.5 Action on initial requests.

(a) *Authority*. (1) Requests shall be decided by the FOIA Officer.

(2) A decision to withhold a requested record, to release a record that is exempt from disclosure, or to deny a fee waiver shall be made only after consultation with the General Counsel.

(b) *Form of grant*. (1) When a requested record has been determined to be available, the FOIA Officer shall notify the requester as to when and where the record is available for inspection or, as the case may be, when and how copies will be provided. If fees are due, the FOIA Officer shall state the amount of fees due and the procedures for payment, as described in § 1007.9.

(2) The FOIA Officer shall honor a requester's specified preference of form or format of disclosure (e.g., paper, microform, audiovisual materials, or electronic records) if the record is readily available to the Presidio Trust in the requested form or format or if the record is reproducible by the Presidio Trust with reasonable efforts in the requested form or format.

(3) If a requested record (or portion thereof) is being made available over the objections of a submitter made in accordance with § 1007.4(c), both the requester and the submitter shall be notified of the decision. The notice to the submitter (a copy of which shall be made available to the requester) shall be forwarded a reasonable number of days prior to the date on which disclosure is to be made and shall include:

(i) A statement of the reasons why the submitter's objections were not sustained;

(ii) A specification of the portions of the record to be disclosed, if the submitter's objections were sustained in part; and

(iii) A specified disclosure date.

(4) If a claim of confidentiality has been found frivolous in accordance with § 1007.4(c)(5)(vi) and a determination is made to release the information without consultation with the submitter, the submitter of the information shall be notified of the decision and the reasons therefor a reasonable number of days prior to the date on which disclosure is to be made.

(c) *Form of denial*. (1) A decision withholding a requested record shall be in writing and shall include:

(i) A listing of the names and titles or positions of each person responsible for the denial;

(ii) A reference to the specific exemption or exemptions authorizing the withholding;

(iii) If neither a statute nor an Executive order requires withholding, the sound ground for withholding;

(iv) An estimate of the volume of records or information withheld, in number of pages or in some other reasonable form of estimation. This estimate does not need to be provided if the volume is otherwise indicated through deletions on records disclosed in part, or if providing an estimate would harm an interest protected by an applicable exemption; and

(v) A statement that the denial may be appealed and a reference to the procedures in § 1007.7 for appeal.

(2) A decision denying a request for failure to reasonably describe requested records or for other procedural deficiency or because requested records cannot be located shall be in writing and shall include:

(i) A description of the basis of the decision;

(ii) A list of the names and titles or positions of each person responsible; and

(iii) A statement that the matter may be appealed and a reference to the procedures in § 1007.7 for appeal.

(d) *Expedited processing*. (1) Requests and appeals will be taken out of order and given expedited treatment whenever it is determined by the FOIA Officer that they involve:

(i) Circumstances in which the lack of expedited treatment could reasonably be expected to pose an imminent threat to the life or physical safety of an individual; or

(ii) An urgency to inform the public about an actual or alleged federal government activity, if made by a person primarily engaged in disseminating information.

(2) A request for expedited processing may be made at the time of the initial request for records or at any later time.

(3) A requester who seeks expedited processing must submit a statement, certified to be true and correct to the best of that person's knowledge and belief, explaining in detail the basis for requesting expedited processing.

(4) Within ten calendar days of receiving of a request for expedited processing, the FOIA Officer shall decide whether to grant the request for expedited processing and shall notify the requester of the decision. If a request for expedited processing is granted, the underlying FOIA request shall be given priority and shall be processed as soon as practicable. If a request for expedited processing is denied, any appeal of that decision shall be acted on expeditiously.

§ 1007.6 Time limits for processing initial requests.

(a) *Basic limit*. Requests for records shall be processed promptly. A determination whether to grant or deny a request shall be made within 20 working days after receipt of a request. This determination shall be communicated immediately to the requester.

(b) *Running of basic time limit*. (1) The 20 working day time limit begins to run when a request meeting the requirements of § 1007.3(b) is received at the Presidio Trust.

(2) The running of the basic time limit may be delayed or tolled as explained in § 1007.9 (f), (g) and (h) if a requester:

(i) Has not stated a willingness to pay fees as high as are anticipated and has not sought and been granted a full fee waiver, or

(ii) Has not made a required advance payment.

(c) *Extensions of time*. In the following unusual circumstances, the time limit for acting on an initial request may be extended to the extent reasonably necessary to the proper processing of the request, but in no case may the time limit be extended by more than 20 working days:

(1) The need to search for and collect the requested records from facilities or other establishments that are separate from the main office of the Presidio Trust;

(2) The need to search for, collect, and appropriately examine a voluminous amount of separate and distinct records demanded in a single request; or

(3) The need for consultation, which shall be conducted with all practicable speed, with another agency having a substantial interest in the determination of the request.

(d) *Notice of extension*. A requester shall be notified in writing of an extension under paragraph (c) of this section. The notice shall state the reason for the extension and the date on which a determination on the request is expected to be made.

(e) *Treatment of delay as denial*. If no determination has been reached at the end of the 20 working day period for deciding an initial request, or an extension thereof under § 1007.6(c), the requester may deem the request denied and may exercise a right of appeal in accordance with § 1007.7.

(f) *Notice of delay*. When a determination cannot be reached within the time limit, or extension thereof, the requester shall be notified of the reason for the delay, of the date on which a determination may be expected, and of the right to treat the delay as a denial for purposes of appeal, including a reference to the procedures for filing an appeal in § 1007.7.

§ 1007.7 Appeals.

(a) *Right of appeal*. A requester may appeal to the Executive Director when:

(1) Records have been withheld;

(2) A request has been denied for failure to describe requested records or for other procedural deficiency or because requested records cannot be located;

(3) A fee waiver has been denied;

(4) A request has not been decided within the time limits provided in § 1007.6; or

(5) A request for expedited processing under § 1007.5(d) has been denied.

(b) *Time for appeal*. An appeal must be received at the office of the Presidio Trust no later than 20 working days after the date of the initial denial, in the case of a denial of an entire request, or 20 working days after records

have been made available, in the case of a partial denial.

(c) *Form of appeal.* (1) An appeal shall be initiated by filing a written notice of appeal. The notice shall be accompanied by copies of the original request and the initial denial and should, in order to expedite the appellate process and give the requester an opportunity to present his or her arguments, contain a brief statement of the reasons why the requester believes the initial denial to have been in error.

(2) The appeal shall be addressed to the Executive Director, The Presidio Trust, P.O. Box 29052, San Francisco, CA 94129–0052.

(3) To expedite processing, both the envelope containing a notice of appeal and the face of the notice should bear the legend ''FREEDOM OF INFORMATION APPEAL.''

§ 1007.8 Action on appeals.

(a) *Authority.* Appeals shall be decided by the Executive Director after consultation with the FOIA Officer and the General Counsel.

(b) *Time limit.* A final determination shall be made within 20 working days after receipt of an appeal meeting the requirements of § 1007.7(c).

(c) *Extensions of time.* (1) If the time limit for responding to the initial request for a record was not extended under the provisions of § 1007.6(c) or was extended for fewer than 10 working days, the time for processing of the appeal may be extended to the extent reasonably necessary to the proper processing of the appeal, but in no event may the extension, when taken together with any extension made during processing of the initial request, result in an aggregate extension with respect to any one request of more than 10 working days. The time for processing of an appeal may be extended only if one or more of the unusual circumstances listed in § 1007.6(c) requires an extension.

(2) The appellant shall be advised in writing of the reasons for the extension and the date on which a final determination on the appeal is expected to be dispatched.

(3) If no determination on the appeal has been reached at the end of the 20 working day period, or the extension thereof, the requester is deemed to have exhausted his administrative remedies, giving rise to a right of review in the United States District Court for the Northern District of California, as specified in 5 U.S.C. 552(a)(4).

(4) When no determination can be reached within the applicable time limit, the appeal will nevertheless continue to be processed. On expiration of the time limit, the requester shall be informed of the reason for the delay, of the date on which a determination may be reached to be dispatched, and of the right to seek judicial review.

(d) *Form of decision.* (1) The final determination on an appeal shall be in writing and shall state the basis for the determination. If the determination is to release the requested records or portions thereof, the FOIA Officer shall immediately make the records available. If the determination upholds in whole or part the initial denial of a request for records, the determination shall advise the requester of the right to obtain judicial review in the U.S. District Court for the Northern District of California and shall set forth the names and titles or positions of each person responsible for the denial.

(2) If a requested record (or portion thereof) is being made available over the objections of a submitter made in accordance with § 1007.4(c), the submitter shall be provided notice as described in § 1007.5(b)(3).

§ 1007.9 Fees.

(a) *Policy.* (1) Unless waived pursuant to the provisions of § 1007.10, fees for responding to FOIA requests shall be charged in accordance with the provisions of this section and the current schedule of charges determined by the Executive Director and published in the compilation provided under § 1001.7(b) of this chapter. Such charges shall be set at the level necessary to recoup the full allowable direct costs to the Trust.

(2) Fees shall not be charged if the total amount chargeable does not exceed the costs of routine collection and processing of the fee. The Trust shall periodically determine the cost of routine collection and processing of a fee

and publish such amount in the compilation provided under §1001.7(b) of this chapter.

(3) Where there is a reasonable basis to conclude that a requester or group of requesters acting in concert has divided a request into a series of requests on a single subject or related subjects to avoid assessment of fees, the requests may be aggregated and fees charged accordingly.

(4) Fees shall be charged to recover the full costs of providing such services as certifying that records are true copies or sending records by a method other than regular mail, when the Trust elects to provide such services.

(5) The following definitions shall apply to this part:

(i) The term *search* includes all time spent looking for material that is responsive to a request, including page-by-page or line-by-line identification of material within documents or databases. Searches shall be undertaken in the most efficient and least expensive manner possible, consistent with the Presidio Trust's obligations under FOIA and other applicable laws.

(ii) The term *duplication* refers to the process of making a copy of a record necessary to respond to a FOIA request. Such copies can take the form of paper copy, microform, audio-visual materials, or machine-readable documentation (e.g., magnetic tape or disk), among others. The copy provided shall be in a form that is reasonably usable by requesters.

(iii) A *commercial use request* is a request from or on behalf of a person who seeks information for a use or purpose that furthers the commercial, trade, or profit interests of the requester or the person on whose behalf the request is made. The intended use of records may be determined on the basis of information submitted by a requester and from reasonable inferences based on the identity of the requester and any other available information.

(iv) An *educational institution* is a preschool, a public or private elementary or secondary school, an institution of graduate higher education, an institution of undergraduate higher education, an institution of professional education, or an institution of vocational education, which operates a program or programs of scholarly research.

(v) A *noncommercial scientific institution* is an institution that is not operated for commerce, trade or profit and that is operated solely for the purpose of conducting scientific research the results of which are not intended to promote any particular product or industry.

(vi) A *representative of the news media* is any person actively gathering news for an entity that is organized and operated to publish or broadcast news to the public. The term ''news'' means information that is about current events or that is (or would be) of current interest to the public. Examples of news media entities include, but are not limited to, television or radio stations broadcasting to the public at large, and publishers of periodicals (but only in those instances when they can qualify as disseminators of ''news'') who make their products available for purchase or subscription by the general public. As traditional methods of news delivery evolve (e.g., electronic dissemination of newspapers through telecommunications services), such alternative media would be included in this category. Free-lance journalists may be considered representatives of the news media if they demonstrate a solid basis for expecting publication through a news organization, even though not actually employed by it. A publication contract or past record of publication, or evidence of a specific free-lance assignment from a news organization may indicate a solid basis for expecting publication.

(b) *Commercial use requests.* (1) A requester seeking records for commercial use shall be charged fees for costs incurred in document search and review (even if the search and review fails to locate records that are not exempt from disclosure) and duplication.

(2) A commercial use requester may not be charged fees for time spent resolving legal and policy issues affecting access to requested records.

(c) *Educational and noncommercial scientific institution requests.* (1) A requester seeking records under the auspices of an educational institution in furtherance of scholarly research or a noncommercial scientific institution in

furtherance of scientific research shall be charged for document duplication, except that the first 100 pages of paper copies (or the equivalent cost thereof if the records are in some other form) shall be provided without charge.

(2) Such requesters may not be charged fees for costs incurred in:

(i) Searching for requested records,

(ii) Examining requested records to determine whether they are exempt from mandatory disclosure,

(iii) Deleting reasonably segregable exempt matter,

(iv) Monitoring the requester's inspection of agency records, or

(v) Resolving legal and policy issues affecting access to requested records.

(d) *News media requests.* (1) A representative of the news media shall be charged for document duplication, except that the first 100 pages of paper copies (or the equivalent cost thereof if the records are in some other form) shall be provided without charge.

(2) Representatives of the news media may not be charged fees for costs incurred in:

(i) Searching for requested records,

(ii) Examining requested records to determine whether they are exempt from mandatory disclosure,

(iii) Deleting reasonably segregable exempt matter,

(iv) Monitoring the requester's inspection of agency records, or

(v) Resolving legal and policy issues affecting access to requested records.

(e) *Other requests.* (1) A requester not covered by paragraphs (b), (c), or (d) of this section shall be charged fees for document search (even if the search fails to locate records that are not exempt from disclosure) and duplication, except that the first two hours of search time and the first 100 pages of paper copies (or the equivalent cost thereof if the records are in some other form) shall be provided without charge.

(2) Such requesters may not be charged for costs incurred in:

(i) Examining requested records to determine whether they are exempt from disclosure,

(ii) Deleting reasonably segregable exempt matter,

(iii) Monitoring the requester's inspection of agency records, or

(iv) Resolving legal and policy issues affecting access to requested records.

(f) *Requests for clarification.* Where a request does not provide sufficient information to determine whether it is covered by paragraph (b), (c), (d), or (e) of this section, the requester should be asked to provide additional clarification. If it is necessary to seek such clarification, the request may be deemed to have not been received for purposes of the time limits established in § 1007.6 until the clarification is received. Requests to requesters for clarification shall be made promptly.

(g) *Notice of anticipated fees.* Where a request does not state a willingness to pay fees as high as anticipated by the Presidio Trust, and the requester has not sought and been granted a full waiver of fees under § 1007.10, the request may be deemed to have not been received for purposes of the time limits established in § 1007.6 until the requester has been notified of and agrees to pay the anticipated fee. Advice to requesters with respect to anticipated fees shall be provided promptly.

(h) *Advance payment.* (1) Where it is anticipated that allowable fees are likely to exceed $250.00, the requester may be required to make an advance payment of the entire fee before processing of his or her request.

(2) Where a requester has previously failed to pay a fee within 30 days of the date of billing, processing of any request from that requester shall ordinarily be suspended until the requester pays any amount still owed, including applicable interest, and makes advance payment of allowable fees anticipated in connection with the request.

(3) Advance payment of fees may not be required except as described in paragraphs (h) (1) and (2) of this section.

(4) Issuance of a notice requiring payment of overdue fees or advance payment shall toll the time limit in § 1007.6 until receipt of payment.

(i) *Form of payment.* Payment of fees should be made by check or money order payable to the Presidio Trust. Where appropriate, the official responsible for handling a request may require that payment by check be made in the form of a certified check.

(j) *Billing procedures*. A bill for collection shall be prepared for each request that requires collection of fees.

(k) *Collection of fees*. The bill for collection or an accompanying letter to the requester shall include a statement that interest will be charged in accordance with the Debt Collection Act of 1982, 31 U.S.C. 3717, and implementing regulations, 4 CFR 102.13, if the fees are not paid within 30 days of the date of the bill for collection is mailed or hand-delivered to the requester. This requirement does not apply if the requester is a unit of State or local government. Other authorities of the Debt Collection Act of 1982 shall be used, as appropriate, to collect the fees.

§ 1007.10 Waiver of fees.

(a) *Statutory fee waiver*. Documents shall be furnished without charge or at a charge reduced below the fees chargeable under § 1007.9 if disclosure of the information is in the public interest because it:

(1) Is likely to contribute significantly to public understanding of the operations or activities of the government and

(2) Is not primarily in the commercial interest of the requester.

(b) *Elimination or reduction of fees*. Ordinarily, in the circumstances where the criteria of paragraph (a) of this section are met, fees will be reduced by twenty-five percent from the fees otherwise chargeable to the requester. In exceptional circumstances, and with the approval of the Executive Director, fees may be reduced below this level or waived entirely.

(c) *Notice of denial*. If a requested statutory fee waiver or reduction is denied, the requester shall be notified in writing. The notice shall include:

(1) A statement of the basis on which the waiver or reduction has been denied;

(2) A listing of the names and titles or positions of each person responsible for the denial; and

(3) A statement that the denial may be appealed to the Executive Director and a description of the procedures in § 1007.7 for appeal.

PART 1008—REQUESTS UNDER THE PRIVACY ACT

Sec.

1008.1 Purpose and scope.
1008.2 Definitions.
1008.3 Records subject to the Privacy Act.
1008.4 Standards for maintenance of records subject to the Privacy Act.
1008.5 Federal Register notices describing systems of records.
1008.6 Assuring integrity of records.
1008.7 Conduct of employees.
1008.8 Government contracts.
1008.9 Disclosure of records.
1008.10 Accounting for disclosures.
1008.11 Requests for notification of existence of records: Submission.
1008.12 Requests for notification of existence of records: Action on.
1008.13 Requests for access to records.
1008.14 Requests for access to records: Submission.
1008.15 Requests for access to records: Initial decision.
1008.16 Requests for notification of existence of records and for access to records: Appeals.
1008.17 Requests for access to records: Special situations.
1008.18 Amendment of records.
1008.19 Petitions for amendment: Submission and form.
1008.20 Petitions for amendment: Processing and initial decision.
1008.21 Petitions for amendment: Time limits for processing.
1008.22 Petitions for amendment: Appeals.
1008.23 Petitions for amendment: Action on appeals.
1008.24 Statements of disagreement.

AUTHORITY: Pub. L. 104–333, 110 Stat. 4097 (16 U.S.C. 460bb note); 5 U.S.C. 552a.

SOURCE: 63 FR 71779, Dec. 30, 1998, unless otherwise noted.

§ 1008.1 Purpose and scope.

This part contains the regulations of the Presidio Trust implementing section 3 of the Privacy Act. Sections 1008.3 through 1008.10 describe the procedures and policies of the Presidio Trust concerning maintenance of records which are subject to the Privacy Act. Sections 1008.11 through 1008.17 describe the procedure under which individuals may determine whether systems of records subject to the Privacy Act contain records relating to them and the procedure under which they may seek access to existing records. Sections 1008.18 through 1008.24

describe the procedure under which individuals may petition for amendment of records subject to the Privacy Act relating to them.

§ 1008.2 Definitions.

The following terms have the following meanings as used in this part:

Individual means a citizen of the United States or an alien lawfully admitted for permanent residence.

Maintain means maintain, collect, use or disseminate.

Privacy Act means 5 U.S.C. 552a.

Privacy Act Officer means the Presidio Trust official charged with responsibility for carrying out the functions assigned in this part.

Record means any item, collection, or grouping of information about an individual that is maintained by the Presidio Trust, including, but not limited to, education, financial transactions, medical history, and criminal or employment history and that contains the individual's name, or the identifying number, symbol, or other identifying particular assigned to the individual, such as a finger or voice print, or a photograph. Related definitions include:

(1) *System of records* means a group of any records under the control of the Presidio Trust from which information is retrieved by the name of the individual or by some identifying number, symbol, or other identifying particular assigned to the individual.

(2) *Medical records* means records which relate to the identification, prevention, cure or alleviation of any disease, illness or injury including psychological disorders, alcoholism and drug addiction.

(3) *Personnel records* means records used for personnel management programs or processes such as staffing, employee development, retirement, and grievances and appeals.

(4) *Statistical records* means records in a system of records maintained for statistical research or reporting purposes only and not used in whole or in part in making any determination about an identifiable individual.

Routine use means a use of a record for a purpose which is compatible with the purpose for which it was collected.

System manager means the official designated in a system notice as having administrative responsibility for a system of records.

System notice means the notice describing a system of records required by 5 U.S.C. 552a(e)(4) to be published in the FEDERAL REGISTER upon establishment or revision of the system of records.

§ 1008.3 Records subject to the Privacy Act.

The Privacy Act applies to all records which the Presidio Trust maintains in a system of records.

§ 1008.4 Standards for maintenance of records subject to the Privacy Act.

(a) *Content of records.* Records subject to the Privacy Act shall contain only such information about an individual as is relevant and necessary to accomplish a purpose of the Presidio Trust required to be accomplished by statute or Executive Order of the President.

(b) *Standards of accuracy.* Records subject to the Privacy Act which are used in making any determination about any individual shall be maintained with such accuracy, relevance, timeliness, and completeness as is reasonably necessary to assure fairness to the individual in making the determination.

(c) *Collection of information.* (1) Information which may be used in making determinations about an individual's rights, benefits, and privileges under Federal programs shall, to the greatest extent practicable, be collected directly from that individual.

(2) In deciding whether collection of information from an individual, as opposed to a third party source, is practicable, the following factors, among others, may be considered:

(i) Whether the nature of the information sought is such that it can only be obtained from a third party;

(ii) Whether the cost of collecting the information from the individual is unreasonable when compared with the cost of collecting it from a third party;

(iii) Whether there is a risk that information collected from third parties, if inaccurate, could result in an adverse determination to the individual concerned;

(iv) Whether the information, if supplied by the individual, would have to be verified by a third party; or (v) Whether provisions can be made for verification, by the individual, of information collected from third parties.

(d) *Advice to individuals concerning uses of information.* (1) Each individual who is asked to supply information about him or herself which will be added to a system of records shall be informed of the basis for requesting the information, how it may be used, and what the consequences, if any, are of not supplying the information.

(2) At a minimum, the notice to the individual must state:

(i) The authority (whether granted by statute or Executive Order of the President) which authorizes the solicitation of the information and whether disclosure of such information is mandatory or voluntary;

(ii) The principal purpose or purposes for which the information is intended to be used;

(iii) The routine uses which may be made of the information; and

(iv) The effects on the individual, if any, of not providing all or any part of the requested information.

(3)(i) When information is collected on a standard form, the notice to the individual shall be provided on the form, on a tear-off sheet attached to the form, or on a separate sheet, whichever is most practical.

(ii) When information is collected by an interviewer, the interviewer shall provide the individual with a written notice which the individual may retain. If the interview is conducted by telephone, however, the interviewer may summarize the notice for the individual and need not provide a copy to the individual unless the individual requests a copy.

(iii) An individual may be asked to acknowledge, in writing, that the notice required by this section has been provided.

(e) *Records concerning activity protected by the First Amendment.* No record may be maintained describing how any individual exercises rights guaranteed by the First Amendment to the Constitution unless the maintenance of the record is:

(1) Expressly authorized by statute or by the individual about whom the record is maintained; or

(2) Pertinent to and within the scope of an authorized law enforcement activity.

§ 1008.5 Federal Register notices describing systems of records.

The Privacy Act requires publication of a notice in the FEDERAL REGISTER describing each system of records subject to the Privacy Act. Such notice will be published prior to the establishment or a revision of the system of records. 5 U.S.C. 552a(e)(4).

§ 1008.6 Assuring integrity of records.

(a) *Statutory requirement.* The Privacy Act requires that records subject to the Privacy Act be maintained with appropriate administrative, technical and physical safeguards to insure the security and confidentiality of records and to protect against any anticipated threats or hazards to their security or integrity which could result in substantial harm, embarrassment, inconvenience, or unfairness to any individual on whom information is maintained, 5 U.S.C. 552a(e)(10).

(b) *Records security.* Whether maintained in physical or electronic form, records subject to the Privacy Act shall be maintained in a secure manner commensurate with the sensitivity of the information contained in the system of records. The Privacy Act Officer will periodically review these security measures to ensure their adequacy.

§ 1008.7 Conduct of employees.

(a) *Handling of records subject to the Privacy Act.* Employees whose duties require handling of records subject to the Privacy Act shall, at all times, take care to protect the integrity, security and confidentiality of these records.

(b) *Disclosure of records.* No employee of the Presidio Trust may disclose records subject to the Privacy Act unless disclosure is permitted under § 1008.9 or is to the individual to whom the record pertains.

(c) *Alteration of records.* No employee of the Presidio Trust may alter or destroy a record subject to the Privacy

Act unless such alteration or destruction is:

(1) Properly undertaken in the course of the employee's regular duties; or

(2) Required by a decision under §§ 1008.18 through 1008.23 or the decision of a court of competent jurisdiction.

§ 1008.8 Government contracts.

(a) *Required contract provisions*. When a contract provides for the operation by or on behalf of the Presidio Trust of a system of records to accomplish a Presidio Trust function, the contract shall, consistent with the Presidio Trust's authority, cause the requirements of 5 U.S.C. 552a and the regulations contained in this part to be applied to such system.

(b) *System manager*. A regular employee of the Presidio Trust will be the manager for a system of records operated by a contractor.

§ 1008.9 Disclosure of records.

(a) *Prohibition of disclosure*. No record contained in a system of records may be disclosed by any means of communication to any person, or to another agency, except pursuant to a written request by, or with the prior written consent of, the individual to whom the record pertains.

(b) *General exceptions*. The prohibition contained in paragraph (a) of this section does not apply where disclosure of the record would be:

(1) To those officers or employees of the Presidio Trust who have a need for the record in the performance of their duties; or

(2) Required by the Freedom of Information Act, 5 U.S.C. 552.

(c) *Specific exceptions*. The prohibition contained in paragraph (a) of this section does not apply where disclosure of the record would be:

(1) For a routine use which has been described in a system notice published in the FEDERAL REGISTER;

(2) To the Bureau of the Census for purposes of planning or carrying out a census or survey or related activity pursuant to the provisions of Title 13, U.S. Code.

(3) To a recipient who has provided the system manager responsible for the system in which the record is maintained with advance adequate written assurance that the record will be used solely as a statistical research or reporting record, and the record is to be transferred in a form that is not individually identifiable;

(4) To the National Archives and Records Administration as a record which has sufficient historical or other value to warrant its continued preservation by the U.S. Government, or for evaluation by the Archivist of the United States or the designee of the Archivist to determine whether the record has such value;

(5) To another agency or to an instrumentality of any governmental jurisdiction within or under the control of the United States for a civil or criminal law enforcement activity if the activity is authorized by law, and if the head of the agency or instrumentality has made a written request to the Presidio Trust specifying the particular portion desired and the law enforcement activity for which the record is sought;

(6) To a person pursuant to a showing of compelling circumstances affecting the health or safety of an individual if upon such disclosure notification is transmitted to the last known address of such individual;

(7) To either House of Congress, or, to the extent of matter within its jurisdiction, any committee or subcommittee thereof, any joint committee of Congress or subcommittee of any such joint committee;

(8) To the Comptroller General, or any of his authorized representatives, in the course of the performance of the duties of the General Accounting Office;

(9) Pursuant to the order of a court of competent jurisdiction; or

(10) To a consumer reporting agency in accordance with section 3(d) of the Federal Claims Collection Act of 1966, as amended (31 U.S.C. 3711(f)).

(d) *Reviewing records prior to disclosure*. (1) Prior to any disclosure of a record about an individual, unless disclosure is required by the Freedom of Information Act, reasonable efforts shall be made to ensure that the records are accurate, complete, timely and relevant for agency purposes.

(2) When a record is disclosed in connection with a Freedom of Information

Act request made under this part and it is appropriate and administratively feasible to do so, the requester shall be informed of any information known to the Presidio Trust indicating that the record may not be fully accurate, complete, or timely.

§ 1008.10 Accounting for disclosures.

(a) *Maintenance of an accounting.* (1) Where a record is disclosed to any person, or to another agency, under any of the specific exceptions provided by § 1008.9(c), an accounting shall be made.

(2) The accounting shall record:

(i) The date, nature, and purpose of each disclosure of a record to any person or to another agency; and

(ii) The name and address of the person or agency to whom the disclosure was made.

(3) Accountings prepared under this section shall be maintained for at least five years or the life of the record, whichever is longer, after the disclosure for which the accounting is made.

(b) *Access to accountings.* (1) Except for accountings of disclosures made under § 1008.9(c)(5), accountings of all disclosures of a record shall be made available to the individual to whom the record relates at the individual's request.

(2) An individual desiring access to an accounting of disclosures of a record pertaining to the individual shall submit a request by following the procedures of § 1008.13.

(c) *Notification of disclosure.* When a record is disclosed pursuant to § 1008.9(c)(9) as the result of the order of a court of competent jurisdiction, reasonable efforts shall be made to notify the individual to whom the record pertains as soon as the order becomes a matter of public record.

§ 1008.11 Request for notification of existence of records: Submission.

(a) *Submission of requests.* (1) Individuals desiring to determine under the Privacy Act whether a system of records contains records pertaining to them shall address inquiries to the Privacy Act Officer, The Presidio Trust, P.O. Box 29052, San Francisco, CA 94129–0052, unless the system notice describing the system prescribes or permits submission to some other official or officials.

(2) Individuals desiring to determine whether records pertaining to them are maintained in two or more systems shall make a separate inquiry concerning each system.

(b) *Form of request.* (1) An inquiry to determine whether a system of records contains records pertaining to an individual shall be in writing.

(2) To expedite processing, both the envelope containing a request and the face of the request should bear the legend ''PRIVACY ACT INQUIRY.''

(3) The request shall state that the individual is seeking information concerning records pertaining to him or herself and shall supply such additional identifying information, if any, as is called for in the system notice describing the system.

(4) Individuals who have reason to believe that information pertaining to them may be filed under a name other than the name they are currently using (e.g., maiden name), shall include such information in the request.

§ 1008.12 Requests for notification of existence of records: Action on.

(a) *Decisions on request.* (1) Individuals inquiring to determine whether a system of records contains records pertaining to them shall be promptly advised whether the system contains records pertaining to them unless:

(i) The records were compiled in reasonable anticipation of a civil action or proceeding; or

(ii) The system of records is one which has been excepted from the notification provisions of the Privacy Act by rulemaking.

(2) If the records were compiled in reasonable anticipation of a civil action or proceeding or the system of records is one which has been excepted from the notification provisions of the Privacy Act by rulemaking, the individuals will be promptly notified that they are not entitled to notification of whether the system contains records pertaining to them.

(b) *Authority to deny requests.* A decision to deny a request for notification of the existence of records shall be made by the Privacy Act officer in consultation with the General Counsel.

(c) *Form of decision.* (1) No particular form is required for a decision informing individuals whether a system of records contains records pertaining to them.

(2) A decision declining to inform an individual whether or not a system of records contains records pertaining to him or her shall be in writing and shall:

(i) State the basis for denial of the request;

(ii) Advise the individual that an appeal of the declination may be made to the Executive Director pursuant to § 1008.16 by writing to the Executive Director, The Presidio Trust, P.O. Box 29052, San Francisco, CA 94129–0052; and

(iii) State that the appeal must be received by the foregoing official within 20 working days of the date of the decision.

(3) If the decision declining a request for notification of the existence of records involves records which fall under the jurisdiction of another agency, the individual shall be informed in a written response which shall:

(i) State the reasons for the denial;

(ii) Include the name, position title, and address of the official responsible for the denial; and (iii) Advise the individual that an appeal of the declination may be made only to the appropriate official of the relevant agency, and include that official's name, position title, and address.

(4) Copies of decisions declining a request for notification of the existence of records made pursuant to paragraphs (c)(2) and (c)(3) of this section shall be provided to the Privacy Act Officer.

§ 1008.13 Requests for access to records.

The Privacy Act permits individuals, upon request, to gain access to their records or to any information pertaining to them which is contained in a system and to review the records and have a copy made of all or any portion thereof in a form comprehensive to them. 5 U.S.C. 552a(d)(1). A request for access shall be submitted in accordance with the procedures in this part.

§ 1008.14 Requests for access to records: Submission.

(a) *Submission of requests.* (1) Requests for access to records shall be submitted to the Privacy Act Officer unless the system notice describing the system prescribes or permits submission to some other official or officials.

(2) Individuals desiring access to records maintained in two or more separate systems shall submit a separate request for access to the records in each system.

(b) *Form of request.* (1) A request for access to records subject to the Privacy Act shall be in writing and addressed to Privacy Act Officer, The Presidio Trust, P.O. Box 29052, San Francisco, CA 94129–0052.

(2) To expedite processing, both the envelope containing a request and the face of the request should bear the legend ''PRIVACY ACT REQUEST FOR ACCESS.''

(3) Requesters shall specify whether they seek all of the records contained in the system which relate to them or only some portion thereof. If only a portion of the records which relate to the individual are sought, the request shall reasonably describe the specific record or records sought.

(4) If the requester seeks to have copies of the requested records made, the request shall state the maximum amount of copying fees which the requester is willing to pay. A request which does not state the amount of fees the requester is willing to pay will be treated as a request to inspect the requested records. Requesters are further notified that under § 1008.15(d) the failure to state willingness to pay fees as high as are anticipated by the Presidio Trust will delay processing of a request.

(5) The request shall supply such identifying information, if any, as is called for in the system notice describing the system.

(6) Requests failing to meet the requirements of this paragraph shall be returned to the requester with a written notice advising the requester of the deficiency in the request.

§ 1008.15 Requests for access to records: Initial decision.

(a) *Decisions on requests.* A request made under this part for access to a record shall be granted promptly unless the record:

(1) Was compiled in reasonable anticipation of a civil action or proceeding; or

(2) Is contained in a system of records which has been excepted from the access provisions of the Privacy Act by rulemaking.

(b) *Authority to deny requests.* A decision to deny a request for access under this part shall be made by the Privacy Act Officer in consultation with the General Counsel.

(c) *Form of decision.* (1) No particular form is required for a decision granting access to a record. The decision shall, however, advise the individual requesting the record as to where and when the record is available for inspection or, as the case may be, where and when copies will be available. If fees are due under § 1008.15(d), the individual requesting the record shall also be notified of the amount of fees due or, if the exact amount has not been determined, the approximate amount of fees due.

(2) A decision denying a request for access, in whole or part, shall be in writing and shall:

(i) State the basis for denial of the request;

(ii) Contain a statement that the denial may be appealed to the Executive Director pursuant to § 1008.16 by writing to the Executive Director, The Presidio Trust, P.O. Box 29052, San Francisco, CA 94129–0052; and (iii) State that the appeal must be received by the foregoing official within 20 working days of the date of the decision.

(3) If the decision denying a request for access involves records which fall under the jurisdiction of another agency, the individual shall be informed in a written response which shall:

(i) State the reasons for the denial;

(ii) Include the name, position title, and address of the official responsible for the denial; and

(iii) Advise the individual that an appeal of the declination may be made only to the appropriate official of the relevant agency, and include that official's name, position title, and address.

(4) Copies of decisions denying requests for access made pursuant to paragraphs (c)(2) and (c)(3) of this section will be provided to the Privacy Act Officer.

(d) *Fees.* (1) No fees may be charged for the cost of searching for or reviewing a record in response to a request made under § 1008.14.

(2) Unless the Privacy Act Officer determines that reduction or waiver of fees is appropriate, fees for copying a record in response to a request made under § 1008.14 shall be charged in accordance with the provisions of this section and the current schedule of charges determined by the Executive Director and published in the compilation provided under § 1001.7(b) of this chapter. Such charges shall be set at the level necessary to recoup the full allowable direct costs to the Trust.

(3) Where it is anticipated that fees chargeable in connection with a request will exceed the amount the person submitting the request has indicated a willingness to pay, the Privacy Act Officer shall notify the requester and shall not complete processing of the request until the requester has agreed, in writing, to pay fees as high as are anticipated.

§ 1008.16 Requests for notification of existence of records and for access to records: Appeals.

(a) *Right of appeal.* Except for appeals pertaining to records under the jurisdiction of another agency, individuals who have been notified that they are not entitled to notification of whether a system of records contains records pertaining to them or have been denied access, in whole or part, to a requested record may appeal to the Executive Director.

(b) *Time for appeal.* (1) An appeal must be received by the Executive Director no later than 20 working days after the date of the initial decision on a request.

(2) The Executive Director may, for good cause shown, extend the time for submission of an appeal if a written request for additional time is received within 20 working days of the date of the initial decision on the request.

(c) *Form of appeal.* (1) An appeal shall be in writing and shall attach copies of

the initial request and the decision on the request.

(2) The appeal shall contain a brief statement of the reasons why the appellant believes the decision on the initial request to have been in error.

(3) The appeal shall be addressed to the Executive Director, The Presidio Trust, P.O. Box 29052, San Francisco, CA 94129–0052.

(d) *Action on appeals.* (1) Appeals from decisions on initial requests made pursuant to §§ 1008.11 and 1008.14 shall be decided for the Presidio Trust by the Executive Director after consultation with the General Counsel.

(2) The decision on an appeal shall be in writing and shall state the basis for the decision.

§ 1008.17 Requests for access to records: Special situations.

(a) *Medical records.* (1) Medical records shall be disclosed to the individual to whom they pertain unless it is determined, in consultation with a medical doctor, that disclosure should be made to a medical doctor of the individual's choosing.

(2) If it is determined that disclosure of medical records directly to the individual to whom they pertain could have an adverse effect on that individual, the individual may designate a medical doctor to receive the records and the records will be disclosed to that doctor.

(b) *Inspection in presence of third party.* (1) Individuals wishing to inspect records pertaining to them which have been opened for their inspection may, during the inspection, be accompanied by a person of their own choosing.

(2) When such a procedure is deemed appropriate, individuals to whom the records pertain may be required to furnish a written statement authorizing discussion of their records in the accompanying person's presence.

§ 1008.18 Amendment of records.

The Privacy Act permits individuals to request amendment of records pertaining to them if they believe the records are not accurate, relevant, timely or complete. 5 U.S.C. 552a(d)(2). A request for amendment of a record shall be submitted in accordance with the procedures in this part.

§ 1008.19 Petitions for amendment: Submission and form.

(a) *Submission of petitions for amendment.* (1) A request for amendment of a record shall be submitted to the Privacy Act Officer unless the system notice describing the system prescribes or permits submission to a different official or officials. If an individual wishes to request amendment of records located in more than one system, a separate petition must be submitted with respect to each system.

(2) A petition for amendment of a record may be submitted only if the individual submitting the petition has previously requested and been granted access to the record and has inspected or been given a copy of the record.

(b) *Form of petition.* (1) A petition for amendment shall be in writing and shall specifically identify the record for which amendment is sought.

(2) The petition shall state, in detail, the reasons why the petitioner believes the record, or the objectionable portion thereof, is not accurate, relevant, timely or complete. Copies of documents or evidence relied upon in support of these reasons shall be submitted with the petition.

(3) The petition shall state, specifically and in detail, the changes sought in the record. If the changes involve rewriting the record or portions thereof or involve adding new language to the record, the petition shall propose specific language to implement the changes.

§ 1008.20 Petitions for amendment: Processing and initial decision.

(a) *Decisions on petitions.* In reviewing a record in response to a petition for amendment, the accuracy, relevance, timeliness and completeness of the record shall be assessed against the criteria set out in § 1008.4.

(b) *Authority to decide.* A decision on a petition for amendment shall be made by the Privacy Act Officer in consultation with the General Counsel.

(c) *Acknowledgment of receipt.* Unless processing of a petition is completed within ten working days, the receipt of the petition for amendment shall be acknowledged in writing by the Privacy Act Officer.

(d) *Inadequate petitions.* (1) If a petition does not meet the requirements of § 1008.19, the petitioner shall be so advised and shall be told what additional information must be submitted to meet the requirements of § 1008.19.

(2) If the petitioner fails to submit the additional information within a reasonable time, the petition may be rejected. The rejection shall be in writing and shall meet the requirements of paragraph (e) of this section.

(e) *Form of decision.* (1) A decision on a petition for amendment shall be in writing and shall state concisely the basis for the decision.

(2) If the petition for amendment is rejected, in whole or part, the petitioner shall be informed in a written response which shall:

(i) State concisely the basis for the decision;

(ii) Advise the petitioner that the rejection may be appealed to the Executive Director, The Presidio Trust, P.O. Box 29052, San Francisco, CA 94129–0052; and

(iii) State that the appeal must be received by the foregoing official within 20 working days of the decision.

(3) If the petition for amendment involves records which fall under the jurisdiction of another agency and is rejected, in whole or part, the petitioner shall be informed in a written response which shall:

(i) State concisely the basis for the decision;

(ii) Include the name, position title, and address of the official responsible for the denial; and

(iii) Advise the individual that an appeal of the rejection may be made only to the appropriate official of the relevant agency, and include that official's name, position title, and address.

(4) Copies of rejections of petitions for amendment made pursuant to paragraphs (e)(2) and (e)(3) of this section will be provided to the Privacy Act Officer.

(f) *Implementation of initial decision.* If a petition for amendment is accepted, in whole or part, the system manager maintaining the record shall:

(1) Correct the record accordingly and,

(2) Where an accounting of disclosures has been made pursuant to § 1008.10, advise all previous recipients of the record that the correction was made and the substance of the correction.

§ 1008.21 Petitions for amendment: Time limits for processing.

(a) *Acknowledgment of receipt.* The acknowledgment of receipt of a petition required by § 1008.20(c) shall be dispatched not later than ten working days after receipt of the petition by the Privacy Act Officer, unless a decision on the petition has been previously dispatched.

(b) *Decision on petition.* A petition for amendment shall be processed promptly. A determination whether to accept or reject the petition for amendment shall be made within 30 working days after receipt of the petition by the system manager responsible for the system containing the challenged record.

(c) *Suspension of time limit.* The 30 working day time limit for a decision on a petition shall be suspended if it is necessary to notify the petitioner, pursuant to § 1008.20(d), that additional information in support of the petition is required. Running of the 30 working day time limit shall resume on receipt of the additional information by the system manager responsible for the system containing the challenged record.

(d) *Extensions of time.* (1) The 30 working day time limit for a decision on a petition may be extended if the Privacy Act Officer determines that an extension is necessary for one of the following reasons:

(i) A decision on the petition requires analysis of voluminous record or records;

(ii) Some or all of the challenged records must be collected from facilities other than the facility at which the Privacy Act Officer is located; or

(iii) Some or all of the challenged records are of concern to another agency of the Federal Government whose assistance and views are being sought in processing the request.

(2) If the official responsible for making a decision on the petition determines that an extension is necessary, the official shall promptly inform the petitioner of the extension and the

date on which a decision is expected to be dispatched.

§ 1008.22 Petitions for amendment: Appeals.

(a) *Right of appeal.* Except for appeals pertaining to records under the jurisdiction of another agency, where a petition for amendment has been rejected in whole or in part, the individual submitting the petition may appeal the denial to the Executive Director.

(b) *Time for appeal.* (1) An appeal must be received no later than 20 working days after the date of the decision on a petition.

(2) The Executive Director may, for good cause shown, extend the time for submission of an appeal if a written request for additional time is received within 20 working days of the date of the decision on a petition.

(c) *Form of appeal.* (1) An appeal shall be in writing and shall attach copies of the initial petition and the decision on that petition.

(2) The appeal shall contain a brief statement of the reasons why the appellant believes the decision on the petition to have been in error.

(3) The appeal shall be addressed to the Executive Director, The Presidio Trust, P.O. Box 29052, San Francisco, CA 94129–0052.

§ 1008.23 Petitions for amendment: Action on appeals.

(a) *Authority.* Appeals from decisions on initial petitions for amendment shall be decided by the Executive Director, in consultation with the General Counsel.

(b) *Time limit.* (1) A final determination on any appeal shall be made within 30 working days after receipt of the appeal.

(2) The 30 working day period for decision on an appeal may be extended, for good cause shown, by the Executive Director. If the 30 working day period is extended, the individual submitting the appeal shall be notified of the extension and of the date on which a determination on the appeal is expected to be dispatched.

(c) *Form of decision.* (1) The final determination on an appeal shall be in writing and shall state the basis for the determination.

(2) If the determination upholds, in whole or part, the initial decision rejecting the petition for amendment, the determination shall also advise the individual submitting the appeal:

(i) Of his or her right to file a concise statement of the reasons for disagreeing with the decision of the Presidio Trust;

(ii) Of the procedure established by § 1008.24 for the filing of the statement of disagreement;

(iii) That the statement which is filed will be made available to anyone to whom the record is subsequently disclosed together with, at the discretion of the Presidio Trust, a brief statement by the Presidio Trust summarizing its reasons for refusing to amend the record;

(iv) That prior recipients of the challenged record will be provided a copy of any statement of dispute to the extent that an accounting of disclosure was maintained; and

(v) Of his or her right to seek judicial review of the Presidio Trust's refusal to amend the record.

(3) If the determination reverses, in whole or in part, the initial decision rejecting the petition for amendment, the system manager responsible for the system containing the challenged record shall be directed to:

(i) Amend the challenged record accordingly; and

(ii) If an accounting of disclosures has been made, advise all previous recipients of the record of the amendment and its substance.

§ 1008.24 Statements of disagreement.

(a) *Filing of statement.* If the determination of the Executive Director under § 1008.23 rejects in whole or part, a petition for amendment, the individual submitting the petition may file with the Privacy Act Officer a concise written statement setting forth the reasons for disagreement with the determination of the Presidio Trust.

(b) *Disclosure of statements.* In any disclosure of a record containing information about which an individual has filed a statement of disagreement under this section which occurs after the filing of the statement, the disputed portion of the record will be clearly noted and the recipient shall be

provided copies of the statement of disagreement. If appropriate, a concise statement of the reasons of the Presidio Trust for not making the requested amendments may also be provided to the recipient.

(c) *Maintenance of statements*. System managers shall develop procedures to assure that statements of disagreement filed with them shall be maintained in such a way as to assure dissemination of the statements to recipients of the records to which the statements pertain.

PART 1009—ADMINISTRATIVE CLAIMS UNDER THE FEDERAL TORT CLAIMS ACT

Sec.
1009.1 Purpose.
1009.2 Procedure for filing claims.
1009.3 Denial of claims.
1009.4 Payment of claims.
1009.5 Indemnification of Presidio Trust directors and employees.

AUTHORITY: Pub. L. 104–333, 110 Stat. 4097 (16 U.S.C. 460bb note); 28 U.S.C. 2672.

SOURCE: 63 FR 71784, Dec. 30, 1998, unless otherwise noted.

§ 1009.1 Purpose.

The purpose of this part is to establish procedures for the filing and settlement of claims under the Federal Tort Claims Act (in part, 28 U.S.C. secs. 2401(b), 2671–2680, as amended by Pub. L. 89–506, 80 Stat. 306). The officers to whom authority is delegated to settle tort claims shall follow and be guided by the regulations issued by the Attorney General prescribing standards and procedures for settlement of tort claims (28 CFR part 14).

§ 1009.2 Procedure for filing claims.

(a) The procedure for filing and the contents of claims shall be pursuant to 28 CFR 14.2, 14.3 and 14.4.

(b) Claims shall be filed directly with the Presidio Trust.

(c) Upon receipt of a claim, the time and date of receipt shall be recorded. The claim shall be forwarded with the investigative file immediately to the General Counsel for determination.

§ 1009.3 Denial of claims.

Denial of a claim shall be communicated as provided by 28 CFR 14.9.

§ 1009.4 Payment of claims.

(a) When an award of $2,500 or less is made, the voucher signed by the claimant shall be transmitted for payment to the Presidio Trust. When an award over $2,500 is made, transmittal for payment will be made as prescribed by 28 CFR 14.10.

(b) Prior to payment, appropriate releases shall be obtained as provided in 28 CFR 14.10.

§ 1009.5 Indemnification of Presidio Trust directors and employees.

(a) The Presidio Trust may indemnify a Presidio Trust director or employee who is personally named as a defendant in any civil suit in state or federal court or an arbitration proceeding or other proceeding seeking damages against a Presidio Trust director or employee personally, for any verdict, judgment, or other monetary award which is rendered against such director or employee, provided that the conduct giving rise to the verdict, judgment, or award was taken within the scope of his or her duties or employment and that such indemnification is in the interest of the Presidio Trust as determined by

(1) The Board, with respect to claims against an employee; or

(2) A majority of the Board, exclusive of the director against whom claims have been made, with respect to claims against a director.

(b) The Presidio Trust may settle or compromise a personal damage claim against a Presidio Trust director or employee by the payment of available funds, at any time, provided the alleged conduct giving rise to the personal damage claim was taken within the scope of the duties or employment of the director or employee and that such settlement or compromise is in the interest of the Presidio Trust as determined by:

(1) the Board, with respect to claims against an employee; or

(2) a majority of the Board, exclusive of the director against whom claims have been made, with respect to claims against a director.

(c) The Presidio Trust will not entertain a request either to agree to indemnify or to settle a personal damage claim before entry of an adverse verdict, judgment, or award, unless exceptional circumstances exist as determined by:

(1) the Board, with respect to claims against an employee; or

(2) a majority of the Board, exclusive of the director against whom claims have been made, with respect to claims against a director.

(d) A Presidio Trust director or employee may request indemnification to satisfy a verdict, judgment, or award entered against the director or employee. The director or employee shall submit a written request, with appropriate documentation including copies of the verdict, judgment, award, or settlement proposal, in a timely manner to the General Counsel, who shall make a recommended disposition of the request. Where appropriate, the Presidio Trust shall seek the views of the Department of Justice. The General Counsel shall forward the request, the accompanying documentation, and the General Counsel's recommendation to the Board for decision. In the event that a claim is made against the General Counsel, the Chair shall designate a director or employee of the Trust to fulfill the duties otherwise assigned to the General Counsel under this section.

(e) Any payment under this section either to indemnify a Presidio Trust director or employee or to settle a personal damage claim shall be contingent upon the availability of funds.

PART 1010—ENVIRONMENTAL QUALITY

Sec.

1010.1 Policy.
1010.2 Purpose.
1010.3 Definitions.
1010.4 NEPA Compliance Coordinator.
1010.5 Major decision points.
1010.6 Determination of requirement for EA or EIS.
1010.7 Actions that do not require an EA or EIS.
1010.8 Actions that normally require an EIS.
1010.9 Preparation of an EIS.
1010.10 Actions that normally require an EA.
1010.11 Preparation of an EA.
1010.12 Public involvement.
1010.13 Trust decision-making procedures.
1010.14 Review of proposals by project applicants.
1010.15 Actions where lead agency designation is necessary.
1010.16 Actions to encourage agency cooperation early in the NEPA process.
1010.17 Actions to eliminate duplication with State and local procedures.

AUTHORITY: Pub. L. 104–333, 110 Stat. 4097 (16 U.S.C. sec. 460bb note); 42 U.S.C. sec. 4321 *et seq.;* 40 CFR 1507.3.

SOURCE: 65 FR 55905, Sept. 15, 2000, unless otherwise noted.

§ 1010.1 Policy.

The Presidio Trust's policy is to:

(a) Use all practical means, consistent with the Trust's statutory authority, available resources, and national policy, to protect and enhance the quality of the human environment;

(b) Ensure that environmental factors and concerns are given appropriate consideration in decisions and actions by the Trust;

(c) Use systematic and timely approaches which will ensure the integrated use of the natural and social sciences and environmental design arts in planning and decision-making which may have an impact on the human environment;

(d) Develop and utilize ecological, cultural, and other environmental information in the management of the Presidio Trust Area and its natural, historic, scenic, cultural, and recreational resources pursuant to the Trust Act;

(e) Invite the cooperation and encourage the participation, where appropriate, of Federal, State, and local authorities and the public in Trust planning and decision-making processes that affect the quality of the human environment; and

(f) Minimize any possible adverse effects of Trust decisions and actions upon the quality of the human environment.

§ 1010.2 Purpose.

The regulations in this part incorporate and supplement the Council on Environmental Quality's (CEQ) regulations at 40 CFR parts 1500 through 1508 for implementing the procedural provisions of the National Environmental

Policy Act of 1969, as amended (NEPA), and otherwise to describe how the Trust intends to consider environmental factors and concerns in the Trust's decision-making process within the requirements set forth in NEPA and CEQ regulations.

§ 1010.3 Definitions.

(a) The following terms have the following meanings as used in this part:

Decision-maker means the Board or its designee.

EA means an environmental assessment, as defined at 40 CFR 1508.9.

EIS means an environmental impact statement, as defined at 40 CFR 1508.11.

Project applicant means an individual, firm, partnership, corporation, joint venture, or other public or private entity other than the Trust (including a combination of more than one such entities) which seeks to demolish, construct, reconstruct, develop, preserve, rehabilitate, or restore real property within the Presidio Trust Area.

(b) If not defined in this part or in this chapter, other terms used in this part have the same meanings as those provided in 40 CFR part 1508.

§ 1010.4 NEPA Compliance Coordinator.

(a) The NEPA Compliance Coordinator, as designated by the Executive Director, shall be the Trust official responsible for implementation and operation of the Trust's policies and procedures on environmental quality and control. The delegation of this responsibility shall not abrogate the responsibility of the Executive Director and the Board to ensure that NEPA and other applicable laws are followed, or the right of the Executive Director and the Board to overrule or alter decisions of the NEPA Compliance Coordinator in accordance with the Trust's regulations and procedures.

(b) The NEPA Compliance Coordinator shall:

(1) Coordinate the formulation and revision of Trust policies and procedures on matters pertaining to environmental protection and enhancement;

(2) Establish and maintain working relationships with relevant government agencies concerned with environmental matters;

(3) Develop procedures within the Trust's planning and decision-making processes to ensure that environmental factors are properly considered in all proposals and decisions in accordance with this part;

(4) Develop, monitor, and review the Trust's implementation of standards, procedures, and working relationships for protection and enhancement of environmental quality and compliance with applicable laws and regulations;

(5) Monitor processes to ensure that the Trust's procedures regarding consideration of environmental quality are achieving their intended purposes;

(6) Advise the Board, officers, and employees of the Trust of technical and management requirements of environmental analysis, of appropriate expertise available, and, in consultation with the Trust's General Counsel, of relevant legal developments;

(7) Monitor the consideration and documentation of the environmental aspects of the Trust's planning and decision-making processes by appropriate officers and employees of the Trust;

(8) Ensure that all EA's and EIS's are prepared in accordance with the appropriate regulations adopted by the CEQ and the Trust;

(9) Consolidate and transmit to appropriate parties the Trust's comments on EIS's and other environmental reports prepared by other agencies;

(10) Acquire information and prepare appropriate reports on environmental matters required of the Trust;

(11) Coordinate Trust efforts to make available to other parties information and advice on the Trust's policies for protecting and enhancing the quality of the environment; and

(12) Designate other Trust employees to execute these duties under the supervision of the NEPA Compliance Coordinator, where necessary for administrative convenience and efficiency. As used in this chapter, the term ''NEPA Compliance Coordinator'' includes any such designee.

§ 1010.5 Major decision points.

(a) The possible environmental effects of a proposed action or project within the Presidio Trust Area must be

considered along with technical, financial, and other factors throughout the decision-making process. Most Trust projects have three distinct stages in the decision-making process:

(1) Conceptual or preliminary study stage;

(2) Detailed planning or final decision stage;

(3) Implementation stage.

(b) Environmental review will be integrated into the decision-making process of the Trust as follows:

(1) During the conceptual or preliminary study stage, the NEPA Compliance Coordinator shall determine whether the proposed action or project is one which is categorically excluded under § 1010.7, has been adequately reviewed in a previously prepared EA and/or EIS, or requires further NEPA review (*i.e.*, an EA or an EIS).

(2) If the proposed action or project is not categorically excluded and has not been adequately reviewed in a previously prepared EA and/or EIS, then prior to the Trust's proceeding beyond the conceptual or preliminary study stage, the NEPA Compliance Coordinator must determine whether an EIS is required. When appropriate, prior to the determination as to whether an EIS is required, the NEPA Compliance Coordinator may initiate a public scoping process in order to inform such a determination.

(3) If an EIS is determined to be necessary, the Trust shall initiate a public scoping process in accordance with 40 CFR 1501.7. An EIS, if determined necessary, must be completed and circulated at the earliest point at which meaningful analysis can be developed for the proposed action or project and prior to the Trust's final approval of the proposed action or project.

§ 1010.6 Determination of requirement for EA or EIS.

In deciding whether to require the preparation of an EA or an EIS, the NEPA Compliance Coordinator will determine whether the proposal is one that:

(a) Normally does not require either an EA or an EIS;

(b) Normally requires an EIS; or

(c) Normally requires an EA, but not necessarily an EIS.

§ 1010.7 Actions that do not require an EA or EIS.

(a) *Categorical Exclusions*. Pursuant to 40 CFR 1508.4, the Trust has determined that the categories of action identified in this paragraph have no significant effect, either individually or cumulatively, on the human environment and are therefore categorically excluded. Such actions (whether approved by the Trust or undertaken by the Trust directly or indirectly) do not require the preparation of an EA or an EIS:

(1) Personnel actions and investigations and personal services contracts;

(2) Administrative actions and operations directly related to the operation of the Trust (e.g., purchase of furnishings, services, and equipment) provided such actions and operations are consistent with applicable Executive Orders;

(3) Internal organizational changes and facility and office expansions, reductions, and closings;

(4) Routine financial transactions, including such things as salaries and expenses, procurement, guarantees, financial assistance, income transfers, audits, fees, bonds and royalties;

(5) Management, formulation, allocation, transfer and reprogramming of the Trust's budget;

(6) Routine and continuing government business, including such things as supervision, administration, operations, maintenance, and replacement activities having limited context and intensity (limited size and magnitude or short-term effects);

(7) Preparation, issuance, and submittal of publications and routine reports;

(8) Activities which are educational, informational, or advisory (including interpretive programs), or otherwise in consultation with or providing technical assistance to other agencies, public and private entities, visitors, individuals, or the general public;

(9) Legislative proposals of an administrative or technical nature, including such things as changes in authorizations for appropriations or financing authority, minor boundary changes and land transactions; or having primarily economic, social, individual or

institutional effects, as well as comments and reports on legislative proposals;

(10) Proposal, adoption, revision, and termination of policies, directives, regulations, and guidelines:

(i) That are of an administrative, financial, legal, technical, or procedural nature, the environmental effects of which are too broad, speculative, or conjectural to lend themselves to environmental analysis and the implementation of which will be subject to the NEPA process either collectively or on a case-by-case basis; or

(ii) Where such actions will not potentially:

(A) Increase public use to the extent of compromising the nature and character of the area or of causing significant physical damage to it;

(B) Introduce non-compatible uses that might compromise the nature and characteristics of the area or cause significant physical damage to it;

(C) Conflict with adjacent ownerships or land uses; or

(D) Cause a significant nuisance to adjacent owners or occupants;

(11) Preparation, approval, coordination, and implementation of plans, including priorities, justifications, and strategies, for research, monitoring, inventorying, and information gathering that is not or is only minimally manipulative and causes no or only minimal physical damage;

(12) Identification, nomination, certification, and determination of eligibility of properties for listing in the National Register of Historic Places and the National Historic Landmark and National Natural Landmark Programs;

(13) Minor or temporary changes in amounts or types of visitor use for the purpose of ensuring visitor safety or resource protection, minor changes in programs or regulations pertaining to visitor activities, and approval of permits or other use and occupancy agreements for special events or public assemblies and meetings, provided such events, assemblies, and meetings entail only short-term or readily mitigated environmental impacts;

(14) Designation of environmental study areas and research areas, including those closed temporarily or permanently to the public, provided such designation would cause no or only minimal environmental impact;

(15) Land and boundary surveys and minor boundary adjustments or transfers of administrative jurisdiction resulting in no significant change in land use;

(16) Archaeological surveys and permits involving only surface collection or small-scale test excavations;

(17) Changes or amendments to an approved plan or action when such changes or amendments would cause no or only minimal environmental impact;

(18) Contracts, work authorizations, or procurement actions related to proposals, programs, and master agreements related to administrative operation of the Trust;

(19) The leasing, permitting, sale, or financing of, or granting of non-fee interests regarding, real or personal property in the Presidio Trust Area, provided that such actions would have no or only minimal environmental impact;

(20) Extension, reissuance, renewal, minor modification, or conversion in form of agreements for use of real property (including but not limited to leases, permits, licenses, concession contracts, use and occupancy agreements, easements, and rights-of-way), so long as such agreements were previously subject to NEPA and do not involve new construction or new or substantially greater environmental impacts, and so long as no new information is known or no changed circumstances have occurred that would give rise to new or substantially greater environmental impacts.

(21) Rehabilitation, modification, or improvement of historic properties that have been determined to be in conformance with the Secretary of the Interior's ''Standards for the Treatment of Historic Properties'' at 36 CFR part 68 and that would have no or only minimal environmental impact;

(22) Rehabilitation, maintenance, modification or improvement of nonhistoric properties that is consistent with applicable Executive Orders, provided there is no potential for significant environmental impacts, including

impacts to cultural landscapes or archaeological resources;

(23) Removal, reduction, or restraint of resident individuals of species that are not threatened or endangered which pose dangers to visitors, residents, or neighbors or immediate threats to resources of the Presidio Trust Area;

(24) Removal of non-historic materials and structures in order to restore natural conditions when such removal has no potential for significant environmental impacts, including impacts to cultural landscapes or archaeological resources and is consistent with applicable Executive Orders;

(25) Installation of signs, displays, and kiosks, etc.;

(26) Replacement of minor structures and facilities (e.g., signs, kiosks, fences, comfort stations, and parking lots) with little or no change in location, capacity, or appearance;

(27) Repair, resurfacing, striping, installation of traffic control devices, and repair/replacement of guardrails, culverts, signs, and other minor features, on existing roads and parking facilities, provided there is no potential for significant environmental impact;

(28) Minor trail relocation, development of compatible trail networks on roads or other formally established routes, and trail maintenance and repair;

(29) Construction or rehabilitation in previously disturbed or developed areas required to meet health or safety regulations, or to meet requirements for making facilities accessible to the handicapped provided such construction or rehabilitation is implemented in a manner consistent with applicable Executive Orders;

(30) Landscaping and landscape maintenance in previously disturbed or developed areas;

(31) Minor changes in programs and regulations pertaining to visitor activities;

(32) Routine maintenance, property management, and resource management, with no potential for significant environmental impact and that are consistent with the Secretary of the Interior's ''Standards for the Treatment of Historic Properties'' at 36 CFR part 68, as applicable, and with applicable Executive Orders;

(33) Upgrading or adding new utility facilities to existing poles, or replacement poles which do not change existing pole line configurations.

(34) Issuance of rights-of-way for overhead utility lines to an individual building or well from an existing line where installation will not result in significant visual intrusion or non-conformance with the Secretary's ''Standards for the Treatment of Historic Properties'' at 36 CFR part 68, as applicable, and will involve no clearance of vegetation other than for placement of poles;

(35) Issuance of rights-of-way for minor overhead utility lines not involving placement of poles or towers and not involving vegetation management or significant visual intrusion in an area administered by NPS or the Trust or non-conformance with the Secretary's ''Standards for the Treatment of Historic Properties'' at 36 CFR part 68, as applicable;

(36) Installation of underground utilities in previously disturbed areas having stable soils, or in an existing utility right-of-way; and

(37) Experimental testing of no longer than 180 days of mass transit systems, and changes in operation of existing systems with no potential for significant environmental impact.

(b) *Extraordinary circumstances.* An action that falls into one or more of the categories in paragraph (a) of this section may still require the preparation of an EIS or an EA if the NEPA Compliance Coordinator determines that it meets the criteria stated in §1010.8(b) or §1010.10(b), respectively, or involves extraordinary circumstances that may have a significant environmental effect. At its discretion, the Trust may require the preparation of an EA or an EIS for a proposal or action that otherwise qualifies for a categorical exclusion. Criteria used in determining whether to prepare an EA or EIS for an action that otherwise qualifies for a categorical exclusion include whether an action may:

(1) Have significant adverse effects on public health or safety;

(2) Have significant adverse effects on such unique geographic characteristics as historic or cultural resources, park, recreation or refuge lands, sole or principal drinking water aquifers, wetlands, floodplains, or ecologically significant or critical areas;

(3) Have highly controversial environmental effects;

(4) Have highly uncertain and potentially significant environmental effects or involve unique or unknown environmental risks;

(5) Establish a precedent for future action or represent a decision in principle about future actions with potentially significant environmental effects;

(6) Be directly related to other actions with individually insignificant but cumulatively significant environmental effects;

(7) Have significant adverse effects on properties listed or eligible for listing on the National Register of Historic Places;

(8) Have significant adverse effects on species listed or proposed to be listed on the List of Endangered or Threatened Species, or have adverse effects on designated Critical Habitat for these species;

(9) Require compliance with Executive Order 11988 (Floodplain Management), Executive Order 11990 (Protection of Wetlands), Executive Order 13007 (Indian Sacred Sites), or the Fish and Wildlife Coordination Act; and/or

(10) Threaten to violate a Federal, State, local or tribal law or requirement imposed for the protection of the environment.

§ 1010.8 Actions that normally require an EIS.

(a) *General procedure*. So long as a proposed action or project is not categorically excluded under § 1010.7, the Trust shall require the preparation of an EA to determine if the proposed action or project requires an EIS. Nevertheless, if it is readily apparent to the NEPA Compliance Coordinator that the proposed action or project will have a significant impact on the environment, an EA is not required, and the Trust will prepare or direct the preparation of an EIS without preparing or completing the preparation of an EA. To assist the NEPA Compliance Coordinator in determining if a proposal or action normally requires the preparation of an EIS, the following criteria and categories of action are provided.

(b) *Criteria*. Criteria used to determine whether proposals or actions may significantly affect the environment and therefore require an EIS are described in 40 CFR 1508.27.

(c) *Categories of action*. The following categories of action normally require an EIS:

(1) Legislative proposals made by the Trust to the United States Congress, other than those described in § 1010.7(b)(9);

(2) Approval, funding, construction, and/or demolition in preparation for construction of any new building, if that activity has a significant effect on the human environment;

(3) Proposals that would significantly alter the kind and amount of natural, recreational, historical, scenic, or cultural resources of the Presidio Trust Area or the integrity of the setting; and

(4) Approval or amendment of a general land use or resource management plan for the entire Presidio Trust Area.

§ 1010.9 Preparation of an EIS.

(a) *Notice of intent*. When the Trust decides to prepare an EIS, it shall publish a notice of intent in the FEDERAL REGISTER in accordance with 40 CFR 1501.7 and 1508.22. Where there is a lengthy period between the Trust's decision to prepare an EIS and the time of actual preparation, then at the discretion of the NEPA Compliance Coordinator the notice of intent shall be published at a reasonable time in advance of preparation of the EIS.

(b) *Preparation*. After having determined that an EIS will be prepared and having published the notice of intent, the Trust will begin to prepare or to direct the preparation of the EIS. The EIS shall be formatted in accordance with 40 CFR 1502.10.

(c) *Supplemental environmental impact statements*. The Trust may supplement a draft or final EIS at any time. The Trust shall prepare a supplement to either a draft or final EIS when:

(1) Substantial changes are proposed to an action analyzed in the draft or final EIS that are relevant to environmental concerns;

(2) There are significant new circumstances or information relevant to environmental concerns and bearing on the proposed action or its impacts; or

(3) Actions are proposed which relate to or are similar to other actions taken or proposed and that together will have a cumulatively significant impact on the human environment.

§ 1010.10 Actions that normally require an EA.

(a) *General procedure.* If a proposal or action is not one that normally requires an EIS, and does not qualify for a categorical exclusion under § 1010.7, the Trust will require, prepare, or direct the preparation of an EA. An EA should be prepared when the Trust has insufficient information on which to determine whether a proposal may have significant impacts. An EA assists the Trust in complying with NEPA when no EIS is necessary, and it facilitates the preparation of an EIS, if one is necessary.

(b) *Criteria.* Criteria used to determine those categories of action that normally require an EA, but not necessarily an EIS, include:

(1) Potential for degradation of environmental quality;

(2) Potential for cumulative adverse impact on environmental quality; and

(3) Potential for adverse impact on protected resources (e.g., natural, scenic, recreational, historical, and cultural resources).

(c) *Categories of action.* The following categories of action normally require the preparation of an EA:

(1) Promulgation of regulations and requirements that are not categorically excluded;

(2) Proposals submitted by project applicants to the Trust for its review, as described in § 1010.14;

(3) Proposals to add or alter access between the Presidio Trust Area and surrounding neighborhoods; and

(4) Contracts, work authorizations, and master agreements related to and implementing programs, policies, and proposals which are not categorically excluded and for which there is no previously prepared EA and/or EIS.

§ 1010.11 Preparation of an EA.

(a) *When to prepare.* The Trust will begin the preparation of an EA (or require it to be begun) as early as possible after it is determined by the NEPA Compliance Coordinator to be required. The Trust will provide notice of such determinations in accordance with § 1010.12. The Trust may prepare or require an EA at any time to assist planning and decision-making.

(b) *Content and format.* An EA is a concise public document used to determine whether to prepare an EIS. An EA should address impacts, including cumulative impacts, on those resources that are specifically relevant to the particular proposal. Those impacts should be addressed in as much detail as is necessary to allow an analysis of the alternatives and the proposal. The EA shall contain brief discussions of the following topics:

(1) Purpose and need for the proposed action.

(2) Description of the proposed action.

(3) Alternatives considered, including a No Action alternative.

(4) Environmental effects of the proposed action and the alternatives, including mitigation measures.

(5) Listing of agencies, organizations, and/or persons consulted.

(c) *Finding of no significant impact (FONSI).* If an EA is completed and the NEPA Compliance Coordinator determines that an EIS is not required, then the NEPA Compliance Coordinator shall prepare a finding of no significant impact. The finding of no significant impact shall be made available to the public by the Trust as specified in 40 CFR 1506.6.

(d) *Mitigated FONSI.* If an EA is completed and the NEPA Compliance Coordinator determines that an EIS is required, then prior to preparation of an EIS, the proposal may be revised in order to mitigate the impacts identified in the EA through adherence to legal requirements, inclusion of mitigation as an integral part of the proposal, and/or fundamental changes to the proposal. A supplemental EA will be prepared on the revised proposal and

will result in a Mitigated Finding of No Significant Impact, preparation of an EIS, or additional revision of the proposal and a supplemental EA.

§ 1010.12 Public involvement.

The Trust will make public involvement an essential part of its environmental review process. Public notice of anticipated Trust actions that may have a significant environmental impact, opportunities for involvement, and availability of environmental documents will be provided through announcements in the Trust's monthly newsletter, postings on its web site (*www.presidiotrust.gov*), placement of public notices in newspapers, direct mailings, and other means appropriate for involving the public in a meaningful way. The Trust will conduct scoping with interested federal, state and local agencies and Indian tribes, will solicit and accept written scoping comments and will hold public scoping meetings to gather early input whenever it determines an EIS to be necessary and otherwise as appropriate. Notice of all public scoping meetings will be given in a timely manner. Interested persons may also obtain information concerning any pending EIS or any other element of the environmental review process of the Trust by contacting the NEPA Compliance Coordinator at the following address: Presidio Trust, P.O. Box 29052, San Francisco, California 94129–0052.

§ 1010.13 Trust decision-making procedures.

To ensure that at major decision-making points all relevant environmental concerns are considered by the decision-maker, the following procedures are established.

(a) An environmental document (*i.e.*, the EA, finding of no significant impact, EIS, or notice of intent), in addition to being prepared at the earliest point in the decision-making process, shall accompany the relevant proposal or action through the Trust's decision-making process to ensure adequate consideration of environmental factors.

(b) The Trust shall consider in its decision-making process only decision alternatives encompassed by the range of alternatives discussed in the relevant environmental documents. Also, where an EIS has been prepared, the Trust shall consider all alternatives described in the EIS, a written record of the consideration of alternatives during the decision-making process shall be maintained, and a monitoring and enforcement program shall be adopted and summarized where applicable for any mitigation.

(c) Any environmental document prepared for a proposal or action shall be made part of the record of any formal rulemaking by the Trust.

§ 1010.14 Review of proposals by project applicants.

(a) An EA shall be required for each proposal for demolition, construction, reconstruction, development, preservation, rehabilitation, or restoration of real property submitted by a project applicant to the Trust for its review, and which the decision-maker agrees to consider, unless categorically excluded or covered by a previously prepared EA and/or EIS.

(b) The decision-maker may not take any approval action on such a proposal submitted by a project applicant until such time as the appropriate environmental review documents have been prepared and submitted to the decision-maker.

(c) At a minimum, and as part of any submission made by a project applicant to the decision-maker for its approval, such project applicant shall make available data and materials concerning the proposal sufficient to permit the Trust to carry out its environmental review responsibilities. When requested, the project applicant shall provide additional information that the NEPA Compliance Coordinator believes is necessary to permit it to satisfy its environmental review functions.

(d) With respect to each project proposed for consideration for which the NEPA Compliance Coordinator determines that an EA shall be prepared, the decision-maker may require a project applicant to submit a draft EA regarding its proposal for the Trust's evaluation and revision. In accordance with 40 CFR 1506.5(b), the Trust shall

make its own evaluation of the environmental issues and shall take responsibility for the scope and content of the final EA.

(e) With respect to each project proposed for consideration for which the NEPA Compliance Coordinator determines an EIS shall be prepared, the decision-maker may require a project applicant to pay a non-refundable fee to the Trust sufficient to cover a portion or all of the Trust's anticipated costs associated with preparation and review of the EIS, including costs associated with review under other applicable laws. Such fee shall be paid to the Trust in full prior to commencement of the preparation of the EIS or any amendment or supplement thereto.

(f) In accordance with 40 CFR 1506.5(c), the EIS shall be prepared by the Trust and/or by contractors who are selected by the Trust and who certify that they have no financial or other interest in the outcome of the project, and the Trust shall independently evaluate the EIS prior to its approval and take responsibility for ensuring its adequacy. The EIS shall be prepared in accordance with 40 CFR part 1502.

(g) The NEPA Compliance Coordinator may set time limits for environmental review appropriate to each proposal, consistent with 40 CFR 1501.8 and 1506.10.

(h) The NEPA Compliance Coordinator shall at the earliest possible time ensure that the Trust commences its environmental review on a proposed project and shall provide the project applicant with any policies or information deemed appropriate in order to permit effective and timely review by the Trust of a proposal once it is submitted to the decision-maker for approval.

§ 1010.15 Actions where lead agency designation is necessary.

(a) Consistent with 40 CFR 1501.5, where a proposed action by the Trust involves one or more other Federal agencies, or where actions by the Trust and one or more Federal agencies are directly related to each other because of their functional interdependence or geographical proximity, the Trust will seek designation as lead agency for those actions that relate solely to the Presidio Trust Area.

(b) For an action that qualifies as one for which the Trust will seek designation as lead agency, the Trust will promptly consult with the appropriate Federal agencies to establish lead agency, joint lead agency, and/or cooperating agency designations.

(c) For an action as to which the Trust undertakes lead, joint lead, or cooperating agency status, the Trust is authorized to enter into a memorandum of understanding or agreement to define the rights and responsibilities of the relevant agencies.

§ 1010.16 Actions to encourage agency cooperation early in the NEPA process.

Consistent with 40 CFR 1501.6, the Trust may request the NPS to be a cooperating agency for actions or projects significantly affecting the quality of the Presidio. In addition, upon request of the Trust, any other Federal, State, local, or tribal agency that has jurisdiction by law or special expertise with respect to any environmental issue that should be addressed in the analysis may be a cooperating agency. The Trust shall use the environmental analysis and proposals of cooperating agencies with jurisdiction by law or special expertise to the maximum extent possible consistent with its responsibility as lead or joint lead agency.

§ 1010.17 Actions to eliminate duplication with State and local procedures.

Consistent with 40 CFR 1506.2, the Trust shall cooperate with State and local agencies to the fullest extent possible to reduce duplication between NEPA and State and local requirements. Such cooperation shall to the fullest extent possible include:

(a) Joint planning processes;

(b) Joint environmental research and studies;

(c) Joint public hearings (except where otherwise provided by statute); and

(d) Joint environmental assessments and/or Environmental Impact Statements/Environmental Impact Reports.

PART 1011—DEBT COLLECTION

Subpart A—General Provisions

Sec.
1011.1 What definitions apply to the regulations in this part?
1011.2 Why is the Presidio Trust issuing these regulations and what do they cover?
1011.3 Do these regulations adopt the Federal Claims Collection Standards?

Subpart B—Procedures To Collect Presidio Trust Debts

1011.4 What notice will the Presidio Trust send to a debtor when collecting a debt?
1011.5 What interest, penalty charges and administrative costs will the Presidio Trust add to a debt?
1011.6 When will the Presidio Trust allow a debtor to enter into a repayment agreement?
1011.7 When will the Presidio Trust compromise a debt?
1011.8 When will the Presidio Trust suspend or terminate debt collection on a debt?
1011.9 When will the Presidio Trust transfer a debt to the Financial Management Service for collection?
1011.10 How will the Presidio Trust use administrative offset (offset of non-tax federal payments) to collect a debt?
1011.11 How will the Presidio Trust use tax refund offset to collect a debt?
1011.12 How will the Presidio Trust offset a Federal employee's salary to collect a debt?
1011.13 How will the Presidio Trust use administrative wage garnishment to collect a debt from a debtor's wages?
1011.14 How will the Presidio Trust report debts to credit bureaus?
1011.15 How will the Presidio Trust refer debts to private collection contractors?
1011.16 When will the Presidio Trust refer debts to the Department of Justice?
1011.17 Will a debtor who owes a debt be ineligible for Presidio Trust licenses, permits, leases, privileges or services?
1011.18 How does a debtor request a special review based on a change in circumstances such as catastrophic illness, divorce, death or disability?
1011.19 Will the Presidio Trust issue a refund if money is erroneously collected on a debt?
1011.20 Will the Presidio Trust's failure to comply with these regulations be a defense to a debt?

Subpart C—Procedures for Offset of Presidio Trust Payments To Collect Debts Owed To Other Federal Agencies

1011.21 How do other Federal agencies use the offset process to collect debts from payments issued by the Presidio Trust?
1011.22 What does the Presidio Trust do upon receipt of a request to offset the salary of a Presidio Trust employee to collect a debt owed by the employee to another Federal agency?

AUTHORITY: 16 U.S.C. 460bb appendix, as amended.

SOURCE: 70 FR 73588, Dec. 13, 2005, unless otherwise noted.

Subpart A—General Provisions

§ 1011.1 What definitions apply to the regulations in this part?

As used in this part:

Administrative offset or *offset* means withholding funds payable by the United States (including funds payable by the United States on behalf of a State Government) to, or held by the United States for, a person to satisfy a debt owed by the person. The term ''administrative offset'' includes, without limitation, the offset of federal salary, vendor, retirement, and Social Security benefit payments. The terms ''centralized administrative offset'' and ''centralized offset'' refer to the process by which the Treasury Department's Financial Management Service offsets federal payments through the Treasury Offset Program.

Administrative wage garnishment means the process by which a Federal agency may, without first obtaining a court order, order a non-Federal employer to withhold amounts from a debtor's wages to satisfy a delinquent debt.

Agency or *Federal agency* means a department, agency, court, court administrative office, or instrumentality in the executive, judicial or legislative branch of the federal government, including government corporations.

Certification means a written statement received by a paying agency or disbursing official that requests the paying agency or disbursing official to

offset the salary of an employee and specifies that required procedural protections have been afforded the employee.

Compromise means the settlement or forgiveness of all or a portion of a debt.

Creditor agency means any Federal agency that is owed a debt and includes a debt collection center when it is acting on behalf of the Presidio Trust.

Debt means any amount of money, funds or property that has been determined by an appropriate agency official to be owed to the United States by a person. As used in this part, the term ''debt'' does not include debts arising under the Internal Revenue Code.

Debt collection center means the Treasury Department or any agency or division designated by the Secretary of the Treasury with authority to collect debts on behalf of creditor agencies.

Debtor means a person who owes a debt to the United States.

Delinquent debt means a debt that has not been paid by the date specified in the Presidio Trust's initial written demand for payment or applicable agreement or instrument (including a post-delinquency payment agreement) unless other satisfactory payment arrangements have been made.

Disposable pay means that part of an employee's pay that remains after deductions that are required by law to be withheld have been made.

Employee or *Federal employee* means a current employee of the Presidio Trust or other Federal agency, including a current member of the Armed Forces, Reserve of the Armed Forces of the United States or of the National Guard.

FCCS means the Federal Claims Collection Standards, which were jointly published by the Departments of the Treasury and Justice and codified at 31 CFR parts 900–904.

FMS means the Financial Management Service, a bureau of the Treasury Department, which is responsible for the centralized collection of delinquent debts through the offset of Federal payments and other means.

IRS means the Internal Revenue Service.

Paying agency means any agency that is making payments of any kind to a debtor. In some cases, the Presidio Trust may be both the paying agency and the creditor agency.

Person means an individual, corporation, partnership, association, organization, state or local government, or any other type of entity other than a Federal agency.

Private collection contractor means a private debt collector under contract with an agency to collect a non-tax debt owed to the Presidio Trust.

Salary offset means a type of administrative offset to collect a debt owed by a Federal employee from the current pay account of the employee.

Tax refund offset means the reduction of a tax refund by the amount of a delinquent debt owed to the Presidio Trust.

Treasury Department means the United States Department of the Treasury.

Treasury Offset Program means the Treasury Department's program for withholding funds payable by the United States to a person to satisfy a debt owed by the person utilizing the Financial Management Service's system that compares information about payments with information about debts.

§ 1011.2 Why is the Presidio Trust issuing these regulations and what do they cover?

(a) *Scope*. The Presidio Trust is issuing these regulations to provide procedures for the collection of debts owed to the Presidio Trust. This part also provides procedures for collection of other debts owed to the United States when a request for offset of a Treasury payment is received by the Treasury Department from another agency (for example, when a Presidio Trust employee owes a debt to the United States Department of Education).

(b) *Applicability*. (1) This part applies to the Presidio Trust when collecting a debt and to persons who owe a debt to the Presidio Trust, or to Federal agencies requesting offset of a payment issued by the Presidio Trust as a paying agency (including salary payments to Presidio Trust employees).

(2) This part does not apply to tax debts.

(3) Nothing in this part precludes collection or disposition of any debt under statutes and regulations other than those described in this part.

(c) *Additional policies, guidelines and procedures.* The Presidio Trust may adopt additional policies, guidelines and procedures consistent with this part and other applicable law.

(d) *Duplication not required.* Nothing in this part requires the Presidio Trust to duplicate notices or administrative proceedings required by contract, this part or other laws or regulations.

(e) *Use of multiple collection remedies allowed.* The Presidio Trust may simultaneously use multiple collection remedies to collect a debt, except as prohibited by law. This part is intended to promote aggressive debt collection, using for each debt all available collection remedies. These remedies are not listed in any prescribed order to provide the Presidio Trust with flexibility in determining which remedies will be most efficient in collecting the particular debt.

(f) *Cross-servicing with the Treasury Department.* These regulations authorize the Presidio Trust to enter a cross-servicing agreement with the Treasury Department under which the Treasury Department will take authorized action to collect debts owed to the Presidio Trust.

§ 1011.3 Do these regulations adopt the Federal Claims Collections Standards?

This part adopts and incorporates all provisions of the FCCS. This part also supplements the FCCS by prescribing procedures consistent with the FCCS, as necessary and appropriate for Presidio Trust operations.

Subpart B—Procedures To Collect Presidio Trust Debts

§ 1011.4 What notice will the Presidio Trust send to a debtor when collecting a debt?

(a) *Notice requirements.* The Presidio Trust will aggressively collect debts. The Presidio Trust will send at least one written notice to a debtor informing the debtor of the consequences of failing to pay or otherwise resolve a debt. The notice(s) will be sent to the debtor's most current address for the debtor in the records of the Presidio Trust. Except as otherwise provided in paragraph (b) of this section, the written notice(s) will explain to the debtor:

(1) The amount, nature and basis of the debt;

(2) How interest, penalty charges and administrative costs are added to the debt, the date by which payment should be made to avoid such charges, and that such assessments must be made unless waived (see § 1011.5 of this part);

(3) The date by which payment is due and that the debt will be considered delinquent if payment is not received by the Presidio Trust by the due date, which date will not be less than 30 days after the date of the notice, and the date by which payment must be received by the Presidio Trust to avoid the enforced collection actions described in paragraph (a)(6) of this section, which date will not be less than 60 days after the date of the notice;

(4) How the debtor may enter into a written agreement to repay the debt voluntarily under terms acceptable to the Presidio Trust (see § 1011.6 of this part);

(5) The name, address and telephone number of a contact person within the Presidio Trust;

(6) The Presidio Trust's intention to enforce collection if the debtor fails to pay or otherwise resolve the debt, by taking one or more of the following actions:

(i) Use administrative offset or other offset to offset the debtor's federal payments, including, without limitation, income tax refunds, salary, certain benefit payments (such as Social Security), retirement, vendor, travel reimbursements and advances, and other federal payments (see § 1011.10 through 1011.12 of this part);

(ii) Refer the debt to a private collection agency (see § 1011.15 of this part);

(iii) Report the debt to a credit bureau (see § 1011.14 of this part);

(iv) Garnish the debtor's wages through administrative wage garnishment (see § 1011.13 of this part);

(v) Refer the debt to the Department of Justice to initiate litigation to collect the debt (see § 1011.16 of this part);

(vi) Refer the debt to the FMS for collection (see § 1011.9 of this part);

(7) That debts over 180 days delinquent must be referred to the FMS for the collection actions described in paragraph (a)(6) of this section (see § 1011.9 of this part);

(8) How the debtor may inspect and obtain copies of disclosable records related to the debt;

(9) How the debtor may request a review of the Presidio Trust's determination that the debtor owes a debt.

(10) How a debtor may request a hearing if the Presidio Trust intends to garnish the debtor's non-Federal wages (see § 1011.13(a) of this part), including:

(i) The method and time period for requesting a hearing;

(ii) That the timely filing of a request for a hearing on or before the 15th business day following the date of the notice will stay the commencement of administrative wage garnishment, but not necessarily other collection procedures; and

(iii) The name and address of the office to which the request for a hearing should be sent.

(11) How a debtor who is a Federal employee subject to Federal salary offset may request a hearing (see § 1011.12(e) of this part), including:

(i) The method and time period for requesting a hearing;

(ii) That the timely filing of a request for a hearing on or before the 15th business day following the date of the notice will stay the commencement of salary offset, but not necessarily other collection procedures;

(iii) The name and address of the office to which the request for a hearing should be sent;

(iv) That the Presidio Trust will refer the debt to the debtor's employing agency or to the FMS to implement salary offset, unless the employee files a timely request for a hearing;

(v) That a final decision on the hearing, if requested, will be issued at the earliest practical date, but not later than 60 days after the filing of the request for a hearing, unless the employee requests and the hearing official grants a delay in the proceedings;

(vi) That any knowingly false or frivolous statements, representations or evidence may subject the Federal employee to penalties under the False Claims Act (31 U.S.C. 3729–3731) or other applicable statutory authority, and criminal penalties under 18 U.S.C. 286, 287, 1001, and 1002, or other applicable statutory authority;

(vii) That unless prohibited by contract or statute, amounts paid on or deducted for the debt which are later waived or found not owed to the United States will be promptly refunded to the employee; and

(viii) That proceedings with respect to such debt are governed by 5 U.S.C. 5514 and 31 U.S.C. 3716;

(12) That the debtor may request a waiver of the debt;

(13) That the debtor's spouse may claim the spouse's share of a joint income tax refund by filing Form 8379 with the IRS;

(14) That the debtor may exercise other statutory or regulatory rights and remedies available to the debtor;

(15) That the Presidio Trust may suspend or revoke any licenses, permits, leases, privileges or services for failure to pay a debt (see § 1011.17 of this part); and

(16) That the debtor should advise the Presidio Trust of a bankruptcy proceeding of the debtor or another person liable for the debt being collected.

(b) *Exceptions to notice requirements.* The Presidio Trust may omit from a notice to a debtor one or more of the provisions contained in paragraphs (a)(6) through (a)(16) of this section if the Presidio Trust, in consultation with its General Counsel, determines that any provision is not legally required given the collection remedies to be applied to a particular debt.

(c) *Respond to debtors.* The Presidio Trust will respond promptly to communications from debtors.

§ 1011.5 What interest, penalty charges and administrative costs will the Presidio Trust add to a debt?

(a) *Interest.* (1) The Presidio Trust will assess interest on all delinquent debts unless prohibited by statute, regulation or contract.

(2) Interest begins to accrue on all debts from the date the debt becomes delinquent. The Presidio Trust will waive collection of interest on that portion of the debt that is paid within

30 days after the date on which interest begins to accrue. The Presidio Trust will assess interest at the rate established by the Treasury Department under 31 U.S.C. 3717, unless a different rate is established by a contract, repayment agreement or statute. The Presidio Trust will notify the debtor of the basis for the interest rate assessed.

(b) *Penalty*. The Presidio Trust will assess a penalty of not more than 6% a year, or such other higher rate as authorized by law, on any portion of a debt that is delinquent for more than 90 days.

(c) *Administrative costs*. The Presidio Trust will assess charges to cover administrative costs incurred as a result of the debtor's failure to pay a debt. The Presidio Trust will waive collection of administrative costs on that portion of the debt that is paid within 30 days after the date on which the administrative costs begin to accrue. Administrative costs include the costs of processing and handling a debt, obtaining a credit report, using a private collection contractor, costs of a hearing including, the costs of a hearing officer, and service fees charged by a Federal agency for collection activities undertaken on behalf of the Presidio Trust.

(d) *Allocation of payments*. A partial or installment payment by a debtor will be applied first to outstanding penalty assessments, second to administrative costs, third to accrued interest, and fourth to outstanding debt principal.

(e) *Additional authority*. The Presidio Trust may have additional policies, guidelines and procedures regarding how interest, penalties and administrative costs are assessed on particular types of debts. The Presidio Trust will explain in the notice to the debtor described in § 1011.4 of this part how interest, penalties, administrative costs and other charges are assessed, unless the requirements are included in a contract or repayment agreement.

(f) *Waiver*. (1) The Presidio Trust may waive collection of all or part of accrued interest, penalties and administrative costs when it would be against equity and good conscience or not in the Presidio Trust's best interest to collect such charges.

(2) A decision to waive interest, penalties or administrative costs may be made at any time before a debt is paid. However, unless otherwise provided in these regulations, when these charges have been collected before the waiver decision, they will not be refunded.

(g) *Accrual during suspension of debt collection*. In most cases, interest, penalties and administrative costs will continue to accrue during any period when collection has been suspended for any reason (for example, when the debtor has requested a hearing). The Presidio Trust may suspend accrual of any or all of these charges when accrual would be against equity and good conscience or not in the Presidio Trust's best interest.

[70 FR 73588, Dec. 13, 2005; 71 FR 2109, Jan. 12, 2006]

§ 1011.6 When will the Presidio Trust allow a debtor to enter into a repayment agreement?

(a) *Voluntary repayment*. In response to a notice of a debt, the debtor may propose to the Presidio Trust the voluntary repayment of the debt in lieu of the Presidio Trust taking other collection actions under this part.

(b) *Debtor's request*. The request from the debtor must:

(1) Be in writing;

(2) Admit the existence of the entire debt; and

(3) Either propose payment of the debt (together with interest, penalties and administrative costs) in a lump sum, or set forth a proposed repayment schedule.

(c) *Repayment schedule*. The Presidio Trust will collect debts in one lump sum whenever feasible. The Presidio Trust may accept payment in regular installments that bear a reasonable relationship to the size of the debt.

(d) *Repayment agreement*. The Presidio Trust will consider a request to enter into a voluntary repayment agreement in accordance with the FCCS. The Presidio Trust may request additional information from the debtor, including, without limitation, financial statements, in order to determine whether to enter into a voluntary repayment agreement. The Presidio Trust will set the necessary terms of any repayment agreement. No repayment agreement

will be binding on the Presidio Trust unless it is in writing and signed by both the debtor and an authorized Presidio Trust representative. The Presidio Trust is not required to enter into a repayment agreement.

§ 1011.7 When will the Presidio Trust compromise a debt?

(a) *Authority*. The Presidio Trust may compromise a debt in accordance with the FCCS and such procedures as the Presidio Trust may adopt. (See § 1011.16 of this subpart).

(b) *Report to IRS*. The uncollected portion of a debt owed to the Presidio Trust that is not recovered as the result of a compromise will be reported to the IRS as income to the debtor in accordance with IRS and Presidio Trust procedures.

§ 1011.8 When will the Presidio Trust suspend or terminate debt collection on a debt?

If, after pursuing all appropriate means of collection, the Presidio Trust determines that a debt is uncollectible, the Presidio Trust may suspend or terminate debt collection activity in accordance with the FCCS and the Presidio Trust's procedures.

§ 1011.9 When will the Presidio Trust transfer a debt to the Financial Management Service for collection?

(a) *Cross-servicing*. The Presidio Trust will transfer any eligible debt that is more than 180 days delinquent to the FMS for debt collection services, a process known as ''cross-servicing.'' The Presidio Trust may transfer debts delinquent 180 days or less to the FMS in accordance with the procedures described in 31 CFR 285.12. The FMS takes appropriate action to collect or compromise the transferred debt, or to suspend or terminate collection action thereon, in accordance with the statutory and regulatory requirements and authorities applicable to the debt and the collection action to be taken. Appropriate action includes, without limitation, contact with the debtor, referral of the debt to the Treasury Offset Program, private collection agencies or the Department of Justice, reporting of the debt to credit bureaus, and administrative wage garnishment.

(b) *Notice; certification*. At least 60 days prior to transferring a debt to the FMS, the Presidio Trust will send notice to the debtor as required by § 1011.4 of this part. The Presidio Trust will certify to the FMS, in writing, that the debt is valid, delinquent, legally enforceable and that there are no legal bars to collection. In addition, the Presidio Trust will certify its compliance with all applicable due process and other requirements as described in this part and other Federal laws.

(c) *Treasury Offset Program*. As part of its debt collection process, the FMS uses the Treasury Offset Program to collect debts by administrative and tax refund offset. The Treasury Offset Program is a centralized offset program administered by the FMS to collect delinquent debts owed to Federal agencies and states (including past-due child support). Under the Treasury Offset Program, before a federal payment is disbursed, the FMS compares the name and taxpayer identification number (TIN) of the payee with the names and TINs of debtors that have been submitted by Federal agencies and states to the Treasury Offset Program database. If there is a match, the FMS (or, in some cases, another Federal disbursing agency) offsets all or a portion of the federal payment, disburses any remaining payment to the payee, and pays the offset amount to the creditor agency. Federal payments eligible for offset include, without limitation, income tax refunds, salary, travel advances and reimbursements, retirement and vendor payments, and Social Security and other benefit payments.

§ 1011.10 How will the Presidio Trust use administrative offset (offset of non-tax federal payments) to collect a debt?

(a) *Centralized administrative offset through the Treasury Offset Program*. (1) If not already transferred to the FMS under § 1011.9 of this part, the Presidio Trust will refer any eligible debt over 180 days delinquent to the Treasury Offset Program for collection by centralized administrative offset. The Presidio Trust may refer any eligible debt less than 180 days delinquent to the Treasury Offset Program for offset.

(2) At least 60 days prior to referring a debt to the Treasury Offset Program, in accordance with paragraph (a)(1) of this section, the Presidio Trust will send notice to the debtor in accordance with the requirements of § 1011.4 of this part. The Presidio Trust will certify to the FMS, in writing, that the debt is valid, delinquent, legally enforceable and that there are no legal bars to collection by offset. In addition, the Presidio Trust will certify its compliance with the due process requirements under 31 U.S.C. 3716(a) and with the requirements described in this part.

(b) *Non-centralized administrative offset for a debt.* (1) When centralized administrative offset through the Treasury Offset Program is not available or appropriate, the Presidio Trust may collect delinquent, legally enforceable debts through non-centralized administrative offset. In these cases, the Presidio Trust may offset a payment internally or make an offset request directly to a federal paying agency.

(2) At least 30 days prior to offsetting a payment internally or requesting a federal paying agency to offset a payment, the Presidio Trust will send notice to the debtor in accordance with the requirements of § 1011.4 of this part. When referring a debt for offset under this paragraph (b), the Presidio Trust will certify, in writing, that the debt is valid, delinquent, legally enforceable and that there are no legal bars to collection by offset. In addition, the Presidio Trust will certify its compliance with the due process requirements under 31 U.S.C. 3716(a) and with these regulations concerning administrative offset.

(c) *Administrative review.* The notice described in § 1011.4 of this part will explain to the debtor how to request an administrative review of the Presidio Trust determination that the debtor owes a debt and how to present evidence that the debt is not delinquent or legally enforceable. In addition to challenging the existence and amount of the debt, the debtor may seek a review of the terms of repayment. In most cases, the Presidio Trust will provide the debtor with a ''paper hearing'' based upon a review of the written record, including documentation provided by the debtor. The Presidio Trust will provide the debtor with a reasonable opportunity for an oral hearing when the debtor requests reconsideration of the debt and the Presidio Trust determines that the question of the indebtedness cannot be resolved by review of the documentary evidence, for example, when the validity of the debt turns on an issue of credibility or veracity. Unless otherwise required by law, an oral hearing under this section is not required to be a formal evidentiary hearing, although the Presidio Trust will document all significant matters presented at the hearing. The Presidio Trust may suspend collection through administrative offset and/or other collection actions pending the resolution of a debtor's dispute. The Presidio Trust may establish policies, guidelines and procedures concerning the administrative review process consistent with the FCCS and the regulations in this section.

(d) *Procedures for expedited offset.* Under the circumstances described by the FCCS, the Presidio Trust may effect an offset against a payment to be made to the debtor prior to sending a notice to the debtor, as described in § 1011.4 of this part, or completing the procedures described in paragraph (b)(2) and (c) of this section. The Presidio Trust will give the debtor notice and an opportunity for review as soon as practicable and promptly refund any money ultimately found not to have been owed to the Government.

§ 1011.11 How will the Presidio Trust use tax refund offset to collect a debt?

(a) *Tax refund offset.* In most cases, the FMS uses the Treasury Offset Program to collect debts by the offset of tax refunds and other federal payments. See § 1011.9(c) of this part. If not already transferred to the FMS under § 1011.9 of this part, the Presidio Trust will refer to the Treasury Offset Program any delinquent, legally enforceable debt for collection by tax refund offset.

(b) *Notice; certification.* At least 60 days prior to referring a debt to the Treasury Offset Program, the Presidio Trust will send notice to the debtor in accordance with the requirements of § 1011.4 of this part. The Presidio Trust

will certify to the FMS's Treasury Offset Program, in writing, that the debt is delinquent and legally enforceable in the amount submitted and that the Presidio Trust has made reasonable efforts to obtain payment of the debt. In addition, the Presidio Trust will certify its compliance with all applicable due process and other requirements described in this part and other applicable law.

(c) *Administrative review*. The notice described in § 1011.4 of this part will provide the debtor with at least 60 days prior to the initiation of tax refund offset to request an administrative review as described in § 1011.10(c) of this part. The Presidio Trust may suspend collection through tax refund offset and/or other collection actions pending the resolution of the debtor's dispute.

§ 1011.12 How will the Presidio Trust offset a Federal employee's salary to collect a debt?

(a) *Federal salary offset*. (1) Salary offset is used to collect debts owed to the United States by Federal employees. If a Presidio Trust employee owes a debt, the Presidio Trust may offset the employee's federal salary to collect the debt in the manner described in this section. For information on how a Federal agency other than the Presidio Trust may collect a debt from the salary of a Presidio Trust employee, see § 1011.21 and 1011.22, subpart C, of this part.

(2) Nothing in this part requires the Presidio Trust to collect a debt in accordance with the provisions of this section if Federal law allows otherwise.

(b) *Centralized salary offset through the Treasury Offset Program*. As described in § 1011.9(a) of this part, the Presidio Trust will refer debts to the FMS for collection by administrative offset, including salary offset, through the Treasury Offset Program.

(c) *Non-centralized salary offset for Treasury debts*. The Presidio Trust may collect delinquent debts through non-centralized salary offset. In these cases, the Presidio Trust may offset a payment internally or make a request directly to a paying agency to offset a salary payment to collect a delinquent debt owed by a Federal employee. At least 30 days prior to offsetting internally or requesting a Federal agency to offset a salary payment, the Presidio Trust will send notice to the debtor in accordance with the requirements of § 1011.4 of this part. When referring a debt for offset, the Presidio Trust will certify to the paying agency, in writing, that the debt is valid, delinquent and legally enforceable in the amount stated, and there are no legal bars to collection by salary offset. In addition, the Presidio Trust will certify that all due process and other prerequisites to salary offset have been met. See 5 U.S.C. 5514, 31 U.S.C. 3716(a), and this section for a description of the process for salary offset.

(d) *When prior notice not required*. The Presidio Trust is not required to provide prior notice to a Presidio Trust employee when the following adjustments are made:

(1) Any adjustment to pay arising out of a Presidio Trust employee's election of coverage or a change in coverage under a Federal benefits program requiring periodic deductions from pay, if the amount to be recovered was accumulated over four pay periods or fewer;

(2) A routine intra-agency adjustment of pay that is made to correct an overpayment of pay attributable to clerical or administrative errors or delays in processing pay documents, if the overpayment occurred within the four pay periods preceding the adjustment, and, at the time of such adjustment, or as soon thereafter as practical, the individual is provided written notice of the nature and the amount of the adjustment and point of contact for contesting such adjustment; or

(3) Any adjustment to collect a debt amounting to $50 or less, if, at the time of such adjustment, or as soon thereafter as practical, the individual is provided written notice of the nature and the amount of the adjustment and a point of contact for contesting such adjustment.

(e) *Hearing procedures*. (1) *Request for a hearing*. A Presidio Trust employee who has received a notice that a debt will be collected by means of salary offset may request a hearing concerning the existence or amount of the debt. The employee also may request a

hearing concerning the amount proposed to be deducted from the employee's pay each pay period. The employee must send any request for hearing, in writing, to the office designated in the notice described in §1011.4(a)(11). The request must be received by the designated office on or before the 15th business day following the employee's receipt of the notice. The employee must sign the request and specify whether an oral or paper hearing is requested. If an oral hearing is requested, the employee must explain why the matter cannot be resolved by review of the documentary evidence alone.

(2) *Failure to submit timely request for hearing*. If the employee fails to submit a request for hearing within the time period described in paragraph (e)(1) of this section, the employee will have waived the right to a hearing, and salary offset may be initiated. However, the Presidio Trust may accept a late request for hearing if the employee can show that the late request was the result of circumstances beyond the employee's control or because of a failure to receive actual notice of the filing deadline.

(3) *Hearing official*. The Presidio Trust hearing must be conducted by a hearing official who is not under the supervision or control of the Board of Directors of the Presidio Trust. The hearing official need not be an employee of the Federal Government.

(4) *Notice of hearing*. After the employee requests a hearing, a designated hearing official will inform the employee of the form of the hearing to be provided. For oral hearings, the notice will set forth the date, time and location of the hearing. For paper hearings, the notice will notify the employee of the date by which the employee should submit written arguments to the designated hearing official. The hearing official will give the employee reasonable time to submit documentation in support of the employee's position. The hearing official will schedule a new hearing date if requested by both parties. The hearing official will give both parties reasonable notice of the time and place of a rescheduled hearing.

(5) *Oral hearing*. The hearing official will conduct an oral hearing if the official determines that the matter cannot be resolved by review of documentary evidence alone (for example, when an issue of credibility or veracity is involved). The hearing official will determine the procedure for the oral hearing, determining, for example, the hearing length.

(6) *Paper hearing*. If the hearing official determines that an oral hearing is not necessary, the official will make the determination based upon a review of the available written record, including any documentation submitted by the employee in support of the employee's position.

(7) *Date of decision*. The hearing official will issue a written opinion setting forth the decision, based upon documentary evidence and information developed at the hearing, as soon as practicable after the hearing.

(8) *Final agency action*. The hearing official's decision will be final.

(f) *Salary offset process*. (1) *Determination of disposable pay*. The Presidio Trust payroll office will determine the amount of the employee's disposable pay (as defined in §1011.1 of this part) and will implement salary offset.

(2) *When salary offset begins*. Deductions will begin within three official pay periods.

(3) *Amount of salary offset*. The amount to be offset from each salary payment will be up to 15% of the employee's disposable pay, as follows:

(i) If the amount of the debt is equal to or less than 15% of the disposable pay, such debt generally will be collected in one lump sum payment;

(ii) Installment deductions will be made over a period of no greater than the anticipated period of employment. An installment deduction will not exceed 15% of the disposable pay from which the deduction is made unless the employee has agreed in writing to the deduction of a greater amount.

(4) *Final salary payment*. After the employee's employment with the Presidio Trust ends, the Presidio Trust may make a lump sum deduction exceeding 15% of disposable pay from any final salary or other payments in order to satisfy a debt.

§ 1011.13 How will the Presidio Trust use administrative wage garnishment to collect a debt from a debtor's wages?

(a) *Authority and process.* The Presidio Trust is authorized to collect debts from a debtor's wages by means of administrative wage garnishment in accordance with the requirements of the FCCS and other applicable law. This part adopts and incorporates all of the provisions of 31 CFR 285.11 concerning administrative wage garnishment, including the hearing procedures described therein. The Presidio Trust may use administrative wage garnishment to collect a delinquent debt unless the debtor is making timely payments under an agreement to pay the debt in installments (see § 1011.6 of this part). At least 30 days prior to initiating an administrative wage garnishment, the Presidio Trust will send notice to the debtor in accordance with the requirements of § 1011.4 of this part, including the requirements of § 1011.4(a)(10) of this part. For debts referred to the FMS under § 1011.9 of this part, the Presidio Trust may authorize the FMS to send a notice informing the debtor that administrative wage garnishment will be initiated and how the debtor may request a hearing as described in § 1011.4(a)(10) of this part. If a debtor makes a timely request for a hearing, administrative wage garnishment will not begin until a hearing is held and a decision is sent to the debtor. If a debtor's hearing request is not timely, the Presidio Trust may suspend collection by administrative wage garnishment. All travel expenses incurred by the debtor in connection with an in-person hearing will be borne by the debtor.

(b) *Not applicable to federal salary offset.* This section does not apply to federal salary offset, the process by which the Presidio Trust collects debts from the salaries of Federal employees (see § 1011.12 of this part).

§ 1011.14 How will the Presidio Trust report debts to credit bureaus?

The Presidio Trust will report delinquent debts to credit bureaus in accordance with the provisions of 31 U.S.C. 3711(e) and the FCCS. At least 60 days prior to reporting a delinquent debt to a consumer reporting agency, the Presidio Trust will send notice to the debtor in accordance with the requirements of § 1011.4 of this part. The Presidio Trust may authorize the FMS to report to credit bureaus those delinquent debts that have been transferred to the FMS under § 1011.9 of this part.

§ 1011.15 How will the Presidio Trust refer debts to private collection contractors?

The Presidio Trust will transfer delinquent debts to the FMS to obtain debt collection services provided by private collection contractors. See § 1011.9 of this part.

§ 1011.16 When will the Presidio Trust refer debts to the Department of Justice?

(a) *Compromise or suspension or termination of collection activity.* The Presidio Trust will refer debts having a principal balance over $100,000, or such higher amount as authorized by the Attorney General, to the Department of Justice for approval of any compromise of a debt or suspension or termination of collection activity. See the FCCS and § 1011.7 and 1011.8 of this part.

(b) *Litigation.* The Presidio Trust will promptly refer to the Department of Justice for litigation delinquent debts on which aggressive collection activity has been taken in accordance with this part that the Presidio Trust determines should not be compromised, and on which collection activity should not be suspended or terminated. The Presidio Trust may authorize the FMS to refer to the Department of Justice for litigation those delinquent debts that have been transferred to the FMS under § 1011.9 of this part.

§ 1011.17 Will a debtor who owes a debt be ineligible for Presidio Trust licenses, permits, leases, privileges or services?

Unless prohibited by law, the Presidio Trust may terminate, suspend or revoke licenses, permits, leases (subject to the terms of the leases), or other privileges or services for any inexcusable or willful failure of a debtor to pay a debt. The Presidio Trust may establish guidelines and procedures governing termination, suspension and revocation for delinquent debtors. If

applicable, the Presidio Trust will advise the debtor in the notice required by § 1011.4 of this part of the Presidio Trust's ability to suspend or revoke licenses, permits, leases, or privileges or services.

§ 1011.18 How does a debtor request a special review based on a change in circumstances such as catastrophic illness, divorce, death or disability?

(a) *Material change in circumstances.* A debtor who owes a debt may, at any time, request a special review by the Presidio Trust of the amount of any offset, administrative wage garnishment or voluntary payment, based on materially changed circumstances beyond the control of the debtor such as, without limitation, catastrophic illness, divorce, death or disability.

(b) *Inability to pay.* For purposes of this section, in determining whether an involuntary or voluntary payment would prevent the debtor from meeting essential subsistence expenses (costs incurred for food, housing, clothing, transportation and medical care), the debtor must submit a detailed statement and supporting documents for the debtor, the debtor's, and dependents, indicating:

(1) Income from all sources;

(2) Assets;

(3) Liabilities;

(4) Number of dependents;

(5) Expenses for food, housing, clothing and transportation;

(6) Medical expenses; and

(7) Exceptional expenses, if any.

(c) *Alternative payment arrangement.* If the debtor requests a special review under this section, the debtor must submit an alternative proposed payment schedule and a statement to the Presidio Trust, with supporting documents, showing why the current offset, garnishment or repayment schedule imposes an extreme financial hardship on the debtor. The Presidio Trust will evaluate the statement and documentation and determine whether the current offset, garnishment or repayment schedule imposes extreme financial hardship on the debtor. The Presidio Trust will notify the debtor in writing of such determination, including, if appropriate, a revised offset, garnishment or payment schedule. If the special review results in a revised offset, garnishment or repayment schedule, the Presidio Trust will notify the appropriate agency or other persons about the new terms.

§ 1011.19 Will the Presidio Trust issue a refund if money is erroneously collected on a debt?

The Presidio Trust will promptly refund to a debtor any amount collected on a debt when the debt is waived or otherwise found not to be owed to the United States, or as otherwise required by law. Refunds under this part will not bear interest unless required by law.

§ 1011.20 Will the Presidio Trust's failure to comply with these regulations be a defense to a debt?

No, the failure of the Presidio Trust to comply with any standard in the FCCS, these regulations or such other procedures of the Presidio Trust will not be available to any debtor as a defense.

Subpart C—Procedures for Offset of Presidio Trust Payments To Collect Debts Owed To Other Federal Agencies

§ 1011.21 How do other Federal agencies use the offset process to collect debts from payments issued by the Presidio Trust?

(a) *Offset of Presidio Trust payments to collect debts owed to other Federal agencies.* (1) In most cases, Federal agencies submit eligible debts to the Treasury Offset Program to collect delinquent debts from payments issued by other Federal agencies, a process known as ''centralized offset.'' When centralized offset is not available or appropriate, any Federal agency may ask the Presidio Trust (when acting as a paying agency) to collect a debt owed to such agency by offsetting funds payable to a debtor by the Presidio Trust, including salary payments issued to the Presidio Trust employees. This section and § 1011.22 of this subpart C apply when a Federal agency asks the Presidio Trust to offset a payment issued by the Presidio Trust to a person who owes a debt to the United States.

(2) This subpart C does not apply to the collection of debts through tax refund offset.

(b) *Administrative offset (including salary offset); certification.* The Presidio Trust will initiate a requested offset only upon receipt of written certification from the creditor agency that the debtor owes the delinquent, legally enforceable debt in the amount stated, and that the creditor agency has fully complied with all applicable due process and other requirements, and the creditor agency's regulations, as applicable. Offsets will continue until the debt is paid in full or otherwise resolved to the satisfaction of the creditor agency.

(c) *Where a creditor agency makes requests for offset.* Requests for offset under this section must be sent to the Presidio Trust, ATTN: Chief Financial Officer, P.O. Box 29052, San Francisco, CA 94129–0052.

(d) *Incomplete certification.* The Presidio Trust will return an incomplete debt certification to the creditor agency with notice that the creditor agency must comply with paragraph (b) of this section before action will be taken to collect a debt from a payment issued by the Presidio Trust.

(e) *Review.* The Presidio Trust is not authorized to review the merits of the creditor agency's determination with respect to the amount or validity of the debt certified by the creditor agency.

(f) *When the Presidio Trust will not comply with offset request.* The Presidio Trust will comply with the offset request of another agency unless the Presidio Trust determines that the offset would not be in the best interests of the United States, or would otherwise be contrary to law.

(g) *Multiple debts.* When two or more creditor agencies are seeking offsets from payments made to the same person, or when two or more debts are owed to a single creditor agency, the Presidio Trust may determine the order in which the debts will be collected or whether one or more debts should be collected by offset simultaneously.

(h) *Priority of debts owed to the Presidio Trust.* For purposes of this section, debts owed to the Presidio Trust generally take precedence over debts owed to other agencies. The Presidio Trust may determine whether to pay debts owed to other agencies before paying a debt owed to the Presidio Trust. The Presidio Trust will determine the order in which the debts will be collected based on the best interests of the United States.

§ 1011.22 What does the Presidio Trust do upon receipt of a request to offset the salary of a Presidio Trust employee to collect a debt owed by the employee to another Federal agency?

(a) *Notice to the Presidio Trust employee.* When the Presidio Trust receives proper certification of a debt owed by one of its employees, the Presidio Trust will begin deductions from the employee's pay at the next officially established pay interval. The Presidio Trust will send a written notice to the employee indicating that a certified debt claim has been received from the creditor agency, the amount of the debt claimed to be owed to the creditor agency, the date deductions from salary will begin, and the amount of such deductions.

(b) *Amount of deductions from a Presidio Trust employee's salary.* The amount deducted under § 1011.21(b) of this part will be the lesser of the amount of the debt certified by the creditor agency or an amount up to 15% of the debtor's disposable pay. Deductions will continue until the Presidio Trust knows that the debt is paid in full or until otherwise instructed by the creditor agency. Alternatively, the amount offset may be an amount agreed upon, in writing, by the debtor and the creditor agency. See § 1011.12(g) (salary offset process).

(c) *When the debtor is no longer employed by the Presidio Trust*—(1) *Offset of final and subsequent payments.* If the Presidio Trust employee retires or resigns or if his or her employment ends before collection of the debt is complete, the Presidio Trust will continue to offset up to 100% of an employee's subsequent payments until the debt is paid or otherwise resolved. Such payments include a debtor's final salary payment, lump-sum leave payment, and other payments payable to the debtor by the Presidio Trust.

(2) *Notice to the creditor agency*. If the employee's employment with the Presidio Trust terminates before the debt is paid in full, the Presidio Trust will certify to the creditor agency the total amount of its collection. If the Presidio Trust is aware that the employee is entitled to payments from the Civil Service Retirement and Disability Fund, Federal Employee Retirement System, or other similar payments, the Presidio Trust will provide written notice to the agency making such payments that the debtor owes a debt (including the amount) and that the provisions of 5 CFR 550.1109 have been fully complied with. The creditor agency is responsible for submitting a certified claim to the agency responsible for making such payments before collection may begin. Generally, creditor agencies will collect such monies through the Treasury Offset Program as described in § 1011.9(c) of this part.

(3) *Notice to the debtor*. The Presidio Trust will provide to the debtor a copy of any notices sent to the creditor agency under paragraph (c)(2) of this section.

(d) *When the debtor transfers to another Federal agency*—(1) *Notice to the creditor agency*. If the debtor transfers to another Federal agency before the debt is paid in full, the Presidio Trust will notify the creditor agency and will certify the total amount of its collection on the debt. The Presidio Trust will provide a copy of the certification to the creditor agency. The creditor agency is responsible for submitting a certified claim to the debtor's new employing agency before collection may begin.

(2) *Notice to the debtor*. The Presidio Trust will provide to the debtor a copy of any notices and certifications sent to the creditor agency under paragraph (d)(1) of this section.

(e) *Request for hearing official*. The Presidio Trust will provide a hearing official upon the creditor agency's request with respect to the Presidio Trust employee.

PART 1012—LEGAL PROCESS: TESTIMONY BY EMPLOYEES AND PRODUCTION OF RECORDS

GENERAL INFORMATION

Sec.
1012.1 What does this part cover?
1012.2 What is the Presidio Trust's policy on granting requests for employee testimony or Presidio Trust records?

RESPONSIBILITIES OF REQUESTERS

1012.3 How can I obtain employee testimony or Presidio Trust records?
1012.4 If I serve a subpoena duces tecum, must I also submit a *Touhy* Request?
1012.5 What information must I put in my *Touhy* Request?
1012.6 How much will I be charged?
1012.7 Can I get an authenticated copy of a Presidio Trust record?

RESPONSIBILITIES OF THE PRESIDIO TRUST

1012.8 How will the Presidio Trust process my *Touhy* Request?
1012.9 What criteria will the Presidio Trust consider in responding to my *Touhy* Request?

RESPONSIBILITIES OF EMPLOYEES

1012.10 What must I, as an employee, do upon receiving a request?
1012.11 Must I get approval before testifying as an expert witness other than on behalf of the United States in a Federal proceeding in which the United States is a party or has a direct and substantial interest?

AUTHORITY: 16 U.S.C. 460bb appendix; 40 U.S.C. 102; 44 U.S.C. 2901 and 3102.

SOURCE: 74 FR 42030, Aug. 20, 2009, unless otherwise noted.

GENERAL INFORMATION

§ 1012.1 What does this part cover?

(a) This part describes how the Presidio Trust responds to requests or subpoenas for:

(1) Testimony by employees in State, territorial or Tribal judicial, legislative or administrative proceedings concerning information acquired while performing official duties or because of an employee's official status;

(2) Testimony by employees in Federal court civil proceedings in which the United States or the Presidio Trust is not a party concerning information

acquired while performing official duties or because of an employee's official status;

(3) Testimony by employees in any judicial or administrative proceeding in which the United States or the Presidio Trust, while not a party, has a direct and substantial interest;

(4) Official records or certification of such records for use in Federal, State, territorial or Tribal judicial, legislative or administrative proceedings.

(b) In this part, ''employee'' means a current or former Presidio Trust employee, or Board member, including a contractor or special government employee, except as the Presidio Trust may otherwise determine in a particular case.

(c) This part does not apply to:

(1) Congressional requests or subpoenas for testimony or records;

(2) Federal court civil proceedings in which the United States or the Presidio Trust is a party;

(3) Federal administrative proceedings;

(4) Federal, State and Tribal criminal court proceedings;

(5) Employees who voluntarily testify, while on their own time or in approved leave status, as private citizens as to facts or events that are not related to the official business of the Presidio Trust. The employee must state for the record that the testimony represents the employee's own views and is not necessarily the official position of the Presidio Trust. See 5 CFR 2635.702(b), 2635.807(b).

(6) Testimony by employees as expert witnesses on subjects outside their official duties, except that they must obtain prior approval if required by § 1012.11.

(d) This part does not affect the rights of any individual or the procedures for obtaining records under the Freedom of Information Act (FOIA), Privacy Act, or statutes governing the certification of official records. The Presidio Trust FOIA and Privacy Act regulations are found at parts 1007 and 1008 of this chapter.

(e) Nothing in this part is intended to impede the appropriate disclosure under applicable laws of Presidio Trust information to Federal, State, territorial, Tribal, or foreign law enforcement, prosecutorial, or regulatory agencies.

(f) This part only provides guidance for the internal operations of the Presidio Trust, and neither creates nor is intended to create any enforceable right or benefit against the United States or the Presidio Trust.

§ 1012.2 What is the Presidio Trust's policy on granting requests for employee testimony or Presidio Trust records?

(a) Except for proceedings covered by § 1012.1(c) and (d), it is the Presidio Trust's general policy not to allow its employees to testify or to produce Presidio Trust records either upon request or by subpoena. However, if the party seeking such testimony or records requests in writing, the Presidio Trust will consider whether to allow testimony or production of records under this part. The Presidio Trust's policy ensures the orderly execution of its mission and programs while not impeding any proceeding inappropriately.

(b) No Presidio Trust employee may testify or produce records in any proceeding to which this part applies unless authorized by the Presidio Trust under §§ 1012.1 through 1012.11. *United States ex rel. Touhy* v. *Ragen*, 340 U.S. 462 (1951).

RESPONSIBILITIES OF REQUESTERS

§ 1012.3 How can I obtain employee testimony or Presidio Trust records?

(a) To obtain employee testimony, you must submit:

(1) A written request (hereafter a ''*Touhy* Request;'' see § 1012.5 and *United States ex rel. Touhy* v. *Ragen*, 340 U.S. 462 (1951)); and

(2) A statement that you will submit a valid check for costs to the Presidio Trust, in accordance with § 1012.6, if your *Touhy* Request is granted.

(b) To obtain official Presidio Trust records, you must submit:

(1) A *Touhy* Request; and

(2) A statement that you agree to pay the costs of search and/or duplication in accordance with the provisions governing requests under the Freedom of Information Act in part 1007 of this chapter, if your *Touhy* Request is granted.

(c) You must send your *Touhy* Request to both:

(1) The employee; and

(2) The General Counsel of the Presidio Trust.

(d) The address of Presidio Trust employees and the General Counsel is: Presidio Trust, 34 Graham Street, P.O. Box 29052, San Francisco, CA 94129–0052.

§ 1012.4 If I serve a subpoena duces tecum, must I also submit a Touhy request?

Yes. If you serve a subpoena for employee testimony or if you serve a subpoena duces tecum for records in the possession of the Presidio Trust, you also must submit a *Touhy* Request.

§ 1012.5 What information must I put in my Touhy Request?

Your *Touhy* Request must:

(a) Identify the employee or record;

(b) Describe the relevance of the desired testimony or records to your proceeding and provide a copy of the pleadings underlying your request;

(c) Identify the parties to your proceeding and any known relationships they have with the Presidio Trust or to its mission or programs;

(d) Show that the desired testimony or records are not reasonably available from any other source;

(e) Show that no record could be provided and used in lieu of employee testimony;

(f) Provide the substance of the testimony expected of the employee; and

(g) Explain why you believe your *Touhy* Request meets the criteria specified in § 1012.9.

§ 1012.6 How much will I be charged?

We will charge you the costs, including travel expenses, for employees to testify under the relevant substantive and procedural laws and regulations. You must pay costs for record production in accordance with the provisions governing requests under the Freedom of Information Act in part 1007 of this chapter. Estimated Costs must be paid in advance by check or money order payable to the Presidio Trust. Upon determination of the precise costs, the Presidio Trust will either reimburse you for any overpayment, or charge you for any underpayment, which charges must be paid within 10 business days by check or money order payable to the Presidio Trust.

§ 1012.7 Can I get an authenticated copy of a Presidio Trust record?

Yes. We may provide an authenticated copy of a Presidio Trust record, for purposes of admissibility under Federal, State or Tribal law. We will do this only if the record has been officially released or would otherwise be released under parts 1007 or 1008 of this chapter, or this part.

RESPONSIBILITIES OF THE PRESIDIO TRUST

§ 1012.8 How will the Presidio Trust process my Touhy Request?

(a) The Executive Director will decide whether to grant or deny your *Touhy* Request. The Presidio Trust's General Counsel, or his or her agent, may negotiate with you or your attorney to refine or limit both the timing and content of your *Touhy* Request. When necessary, the General Counsel also will coordinate with the Department of Justice to file appropriate motions, including motions to remove the matter to Federal court, to quash, or to obtain a protective order.

(b) We will limit the Presidio Trust's decision to allow employee testimony to the scope of your *Touhy* Request.

(c) If you fail to follow the requirements of this part, we will not allow the testimony or produce the records.

(d) If your *Touhy* Request is complete, we will consider the request under § 1012.9.

§ 1012.9 What criteria will the Presidio Trust consider in responding to my Touhy Request?

In deciding whether to grant your *Touhy* Request, the Executive Director will consider:

(a) Your ability to obtain the testimony or records from another source;

(b) The appropriateness of the employee testimony and record production under the relevant regulations of procedure and substantive law, including the FOIA or the Privacy Act; and

(c) The Presidio Trust's ability to:

(1) Conduct its official business unimpeded;

(2) Maintain impartiality in conducting its business;

(3) Minimize the possibility that the Presidio Trust will become involved in issues that are not related to its mission or programs;

(4) Avoid spending public employees' time for private purposes;

(5) Avoid any negative cumulative effect of granting similar requests;

(6) Ensure that privileged or protected matters remain confidential; and

(7) Avoid undue burden on the Presidio Trust.

RESPONSIBILITIES OF EMPLOYEES

§ 1012.10 What must I, as an employee, do upon receiving a request?

(a) If you receive a request or subpoena that does not include a *Touhy* Request, you must immediately notify your supervisor and the Presidio Trust's General Counsel for assistance in issuing the proper response.

(b) If you receive a *Touhy* Request, you must promptly notify your supervisor and forward the request to the General Counsel. After consulting with the General Counsel, the Executive Director will decide whether to grant the *Touhy* Request under § 1012.9.

(c) All decisions granting or denying a *Touhy* Request must be in writing. The Executive Director must ask the General Counsel for advice when preparing the decision.

(d) Under 28 U.S.C. 1733, Federal Rule of Civil Procedure 44(a)(1), or comparable State or Tribal law, a request for an authenticated copy of a Presidio Trust record may be granted by the person having the legal custody of the record. If you believe that you have custody of a record:

(1) Consult the General Counsel to determine if you can grant a request for authentication of records; and

(2) Consult the General Counsel concerning the proper form of the authentication (as authentication requirements may vary by jurisdiction).

§ 1012.11 Must I get approval before testifying as an expert witness other than on behalf of the United States in a Federal proceeding in which the United States is a party or has a direct and substantial interest?

(a) You must comply with 5 CFR 2635.805(c), which details the authorization procedure for an employee to testify as an expert witness, not on behalf of the United States, in any proceeding before a court or agency of the United States in which the United States is a party or has a direct and substantial interest. This procedure means:

(1) You must obtain the written approval of the Presidio Trust's General Counsel;

(2) You must be in an approved leave status if you testify during duty hours; and

(3) You must state for the record that you are appearing as a private individual and that your testimony does not represent the official views of the Presidio Trust.

(b) If you testify as an expert witness on a matter outside the scope of your official duties, and which is not covered by paragraph (a) of this section, you must comply with 5 CFR 2635.802.

PARTS 1013–1099 [RESERVED]

CHAPTER XI—ARCHITECTURAL AND TRANSPORTATION BARRIERS COMPLIANCE BOARD

Part		*Page*
1100–1119	[Reserved]	
1120	Public availability of information	275
1121	Privacy Act implementation	289
1150	Practice and procedures for compliance hearings.	291
1151	Bylaws	304
1154	Enforcement of nondiscrimination on the basis of handicap in programs or activities conducted by the Architectural and Transportation Barriers Compliance Board	308
1191	Americans with Disabilities Act (ADA) accessibility guidelines for buildings and facilities; Architectural Barriers Act (ABA) accessibility guidelines	313
1192	Americans with Disabilities Act (ADA) accessibility guidelines for transportation vehicles	416
1193	Telecommunications Act accessibility guidelines	455
1194	Electronic and information technology accessibility standards	474
1195–1199	[Reserved]	

PARTS 1100–1119 [RESERVED]

PART 1120—PUBLIC AVAILABILITY OF INFORMATION

Subpart A—General

Sec.
1120.1 Purpose and scope of this part.
1120.2 Definitions.
1120.3 Existing records.

Subpart B—Published Information

1120.5 Information published in the Federal Register.
1120.6 Information in A&TBCB publications.

Subpart C—Records Available for Public Inspection and Copying, Documents Published and Indexed

1120.11 Records available for inspection.
1120.12 Indexes to certain records.
1120.13 Effect of nonavailability.

Subpart D—Information Available Upon Request

1120.21 Policy on disclosure of records.
1120.22 Requests to which this subpart applies.
1120.23 Where requests for agency records must be filed.
1120.24 Misdirected written requests; oral requests.
1120.25 Form of requests.
1120.26 Deficient descriptions.
1120.31 A&TBCB receipt of requests; responsibilities of Freedom of Information Officer.
1120.32 A&TBCB action on requests.
1120.33 Time allowed for initial action on requests.
1120.34 Initial denials of requests.
1120.36 Appeals from initial denials.
1120.37 A&TBCB action on appeals.
1120.38 Time allowed for action on appeals.
1120.41 Exempt documents.
1120.42 Release of exempt documents.

Subpart E—Copies of Records and Fees for Services

1120.51 Charges for services, generally.
1120.52 Computerized records.
1120.53 Payment of fees.

AUTHORITY: 5 U.S.C. 552, the Freedom of Information Act, as amended.

SOURCE: 45 FR 80976, Dec. 8, 1980, unless otherwise noted.

Subpart A—General

§ 1120.1 Purpose and scope of this part.

This part contains the general rules of the Architectural and Transportation Barriers Compliance Board for public access to Board records. These regulations implement 5 U.S.C. 552, the Freedom of Information Act, as amended, and the policy of the Board. It is the Board's policy to disseminate information on matters of interest to the public and to disclose on request all information contained in records in its custody insofar as is compatible with the discharge of its responsibilities and consistent with the law. This part sets forth generally the categories of records accessible to the public, the types of records subject to prohibitions or restrictions on disclosure, and the places and procedures to obtain information from records in the custody of the A&TBCB.

§ 1120.2 Definitions.

For the purposes of this part:

(a) *A&TBCB* or *Board* means the Architectural and Transportation Barriers Compliance Board.

(b) *A&TBCB record* or *record* means any document, writing, photograph, sound or magnetic recording, drawing or other similar thing by which information has been preserved, from which the information can be retrieved and copied, and which is, was, or is alleged to be under the control of the A&TBCB.

(1) The term includes—

(i) Informal writings such as handwritten notes and drafts;

(ii) Information preserved in a form which must be translated or deciphered by machine in order to be intelligible to humans;

(iii) Records which were created or acquired by the A&TBCB, its members, its employees, its members' employees, or persons acting on behalf of its members, by use of A&TBCB funds or in the course of transacting official business for the A&TBCB.

(2) The term does not include—

(i) Materials which are legally owned by an A&TBCB member, employee, or member's employee or representative

in his or her purely personal capacity; and

(ii) Materials published by non-Federal organizations which are readily available to the public, such as books, journals, standards, and periodicals available through reference libraries, even if such materials are in the A&TBCB's possession.

(c) The terms *agency*, *person*, *party*, *rule*, *rulemaking*, *order*, and *adjudication* have the meanings given in 5 U.S.C. 551, except where the context demonstrates that a different meaning is intended, and except that for purposes of the Freedom of Information Act the term *agency* as defined in 5 U.S.C. 551 includes any executive department, military department, Government corporation, Government controlled corporation, the United States Postal Service, or other establishment in the executive branch of the Government (including the Executive Office of the President) or any independent regulatory agency.

(d) A government record *under the control of the A&TBCB* means that the record is subject to the free disposition of the A&TBCB. This includes keeping the record available for governmental use as required and protecting, preserving, and exercising such control over it as may be necessary for that purpose. Control of a record is not synonymous with, and does not require, actual physical possession of the record.

(e) *Request* means a request to inspect or obtain a copy of one or more records.

(f) *Requestor* means any person who submits a request to the A&TBCB.

(g) *Public member* means a member appointed by the President from among members of the general public.

(h) *Direct Costs* means those expenditures which an agency actually incurs in searching for and duplicating (and in the case of commercial requesters, reviewing) documents to respond to a FOIA request. Direct costs include, for example, the salary of the employee performing work (the basic rate of pay for the employee plus 16 percent of that rate to cover benefits) and the cost of operating duplicating machinery. Not included in direct costs are overhead expenses such as costs of space, and heating or lighting the facility in which the records are stored.

(i) *Search* includes all time spent looking for material that is responsive to a request, including page-by-page or line-by-line identification of material within documents. Agencies should ensure that searching for material is done in the most efficient and least expensive manner so as to minimize costs for both the agency and the requester. For example, agencies should not engage in line-by-line search when merely duplicating an entire document would prove the less expensive and quicker method of complying with a request. *Search* should be distinguished, moreover, from *review* of material in order to determine whether the material is exempt from disclosure (see paragraph (k) of this section). Searches may be done manually or by computer using existing programming.

(j) *Duplication* refers to the process of making a copy of a document necessary to respond to an FOIA request. Such copies can take the form of paper copy, microform, audio-visual materials, or machine readable documentation (e.g., magnetic tape or disk), among others. The copy provided must be in a form that is reasonably usable by requesters.

(k) *Review* refers to the process of examining documents located in response to a request that is for a commercial use (see paragraph (l) of this section) to determine whether any portion of any document located is permitted to be withheld. It also includes processing any documents for disclosure, e.g., doing all that is necessary to excise them and otherwise prepare them for release. Review does not include time spent resolving general legal or policy issues regarding the application of exemptions.

(l) *Commercial Use Request* refers to a request from or on behalf of one who seeks information for a use or purpose that furthers the commercial, trade, or profit interests of the requester or the person on whose behalf the request is made. In determining whether a requester properly belongs in this category, agencies must determine the use to which a requester will put the documents requested. Moreover, where an agency has reasonable cause to doubt

the use to which a requester will put the records sought, or where that use is not clear from the request itself, agencies should seek additional clarification before assigning the request to a specific category.

(m) *Educational Institution* refers to a preschool, a public or private elementary or secondary school, an institution of graduate higher education, an institution of undergraduate higher education, an institution of professional education, and an institution of vocational education, which operates a program or programs of scholarly research.

(n) *Non-Commercial Scientific Institution* refers to an institution that is not operated on a *commercial* basis as that term is referenced in paragraph (l) of this section, and which is operated solely for the purpose of conducting scientific research the results of which are not intended to promote any particular product or industry.

(o) *Representative of the News Media* refers to any person actively gathering news for an entity that is organized and operated to publish or broadcast news to the public. The term *news* means information that is about current events or that would be of current interest to the public. Examples of news media entities include television or radio stations broadcasting to the public at large, and publishers of periodicals (but only in those instances when they can qualify as disseminators of *news*) who make their products available for purchase or subscription by the general public. These examples are not intended to be all-inclusive.

Moreover, as traditional methods of news delivery evolve (e.g., electronic dissemination of newspapers through telecommunications services), such alternative media would be included in this category. In the case of *freelance* journalists, they may be regarded as working for a news organization if they can demonstrate a solid basis for expecting publication through that organization, even though not actually employed by it. A publication contract would be the clearest proof, but agencies may also look to the past publication record of a requester in making this determination.

[45 FR 80976, Dec. 8, 1980, as amended at 52 FR 43195, Nov. 10, 1987; 55 FR 2519, Jan. 25, 1990]

§ 1120.3 Existing records.

All existing A&TBCB records are subject to routine destruction according to standard record retention schedules.

Subpart B—Published Information

§ 1120.5 Information published in the Federal Register.

(a) *General*. In accordance with the provisions of 5 U.S.C. 552(a)(1), basic information concerning the organization, operations, functions, substantive and procedural rules and regulations, officials, office locations, and allocation of responsibilities for functions and programs of the A&TBCB is published in the FEDERAL REGISTER for the guidance of the public. This information includes—

(1) Description of the A&TBCB's organization and the established places at which, the employees from whom, and the methods whereby the public may obtain information, make submittals or requests, or obtain decisions;

(2) Statements of the general course and method by which the A&TBCB's functions are channeled and determined, including the nature and requirements of all formal and informal procedures available;

(3) Rules of procedure, descriptions of forms available or the places at which forms may be obtained, and instructions as to the scope and contents of all papers, reports, or examinations;

(4) Substantive rules of general applicability adopted as authorized by law, and statements of general policy or interpretations of general applicability formulated and adopted by the A&TBCB, and

(5) Each amendment, revision, or repeal of the foregoing. Indexes to the FEDERAL REGISTER are published in each daily issue and compiled currently on a monthly, quarterly, and annual basis. Copies of the FEDERAL REGISTER and its indexes are available in many libraries and may be purchased from the Superintendent of Documents, Government Printing Office,

Washington, DC 20402. No formal request to examine documents in the FEDERAL REGISTER is necessary to inspect them at the place where they are kept. Materials incorporated by reference in the FEDERAL REGISTER are available for inspection in A&TBCB offices.

(b) *Code of Federal Regulations*. Title 36 of the *Code of Federal Regulations*, which is republished and updated annually, contains a compilation of documents published by the A&TBCB in the FEDERAL REGISTER which set forth substantive and procedural rules and regulations of the A&TBCB and statements of general policy or interpretations of general applicability formulated and adopted by the Board. Copies of the Code of Federal Regulations are available in many libraries and may be purchased from the Superintendent of Documents. Reference copies maintained in offices of the A&TBCB are available for examination without formal request.

(c) *Effect of nonpublication*. Except to the extent that a person has actual and timely notice of its terms, no person may in any manner be required to resort to, or be adversely affected by, any procedure or matter required to be published in the FEDERAL REGISTER, but not so published. For the purposes of this paragraph, material that is reasonably available to the class of persons affected by it is considered to be published in the FEDERAL REGISTER if it has been incorporated by reference in the FEDERAL REGISTER with the approval of the Director of the Federal Register.

§ 1120.6 Information in A&TBCB publications.

(a) *General*. Copies of information material shall be available upon oral or written request so long as an adequate supply exists. These informational materials include press releases, pamphlets, and other materials ordinarily made available to the public without cost as part of a public information program, and reprints of individual parts of the Code of Federal Regulations or FEDERAL REGISTER relating to programs affecting substantial segments of the general public. Copies of informational publications of the A&TBCB which may be purchased from the Superintendent of Documents may be inspected in those offices of the A&TBCB in which reference copies are available. Compliance with the formal procedures provided in this part for obtaining access to A&TBCB records is not necessary for access to the materials described in this paragraph.

(b) *Published indexes*. The informational publications available from the A&TBCB may include indexes to materials published or contained in its records. They will include the current indexes required by the Freedom of Information Act to be maintained and made available for inspecting and copying, except as otherwise provided by published order, as noted below. These indexes provide identifying information for the public as to—

(1) Final opinions and orders made in the adjudication of cases;

(2) Statements of policy and interpretations adopted but not published in the FEDERAL REGISTER; and

(3) Administrative staff manuals and instructions to staff that affect a member of the public.

As promptly as possible after adoption of this part, these indexes will be made available to members of the public. Thereafter, updated indexes or supplements shall be published at least quarterly. However, the Board may determine by order published in the FEDERAL REGISTER that publication of an index is unnecessary and impracticable. In that case the Board shall provide copies of the index on request at a cost not to exceed the direct cost of duplication.

Subpart C—Records Available for Public Inspection and Copying, Documents Published and Indexed

§ 1120.11 Records available for inspection.

Except for those categories of materials listed in paragraph (a) of this section, paragraphs (a) (1) through (9) of § 1120.41 the following materials are available for public inspection and copying during normal business hours at the Washington office of the A&TBCB:

(a) Final opinions and orders made in the adjudication of cases;

(b) Statements of policy and interpretations which have been adopted under the authority of the A&TBCB and are not published in the FEDERAL REGISTER;

(c) Administrative staff manuals and instructions to staff that affect a member of the public;

(d) A record of the final votes of each member of the Board in every Board proceeding;

(e) Current indexes providing identifying information for the public as to the materials made available under paragraphs (a) through (d) of this section.

(f) All papers and documents made a part of the official record in administrative proceedings conducted by the A&TBCB in connection with the issuance, amendment, or revocation of rules and regulations or determinations having general applicability or legal effect with respect to members of the public or a class of the public.

(g) After a final order is issued in any adjudicative proceeding conducted by the A&TBCB, all papers and documents made a part of the official record of the proceeding. (The official docket is kept in the office of the administrative law judge hearing the case until a final order is issued.)

§ 1120.12 Indexes to certain records.

Current indexes are normally available to the public in published form as provided in § 1120.11. These indexes, whether or not published, are made available for inspection and copying on request. If published copies of a particular index are at any time not available or if publication of the index has been determined to be unnecessary and impracticable by order published in the FEDERAL REGISTER, copies of the index will be furnished on request. (See § 1120.6(b), *Published indexes.*)

§ 1120.13 Effect of nonavailability.

Any material listed in paragraph (a) of this section that is not indexed as required by § 1120.11(e) and § 1120.12, may not be cited, relied on, or used as precedent by the Board to adversely affect any member of the public unless the person against whom it is cited, relied on, or used has had actual and timely notice of the material.

Subpart D—Information Available Upon Request

§ 1120.21 Policy on disclosure of records.

(a) It is the policy of the A&TBCB to make information available to the public to the greatest extent possible in keeping with the spirit of the Freedom of Information Act. Therefore, all records of the A&TBCB, except those that the A&TBCB specifically determines must not be disclosed in the national interest, for the protection of private rights, or for the efficient conduct of public business to the extent permitted by the Freedom of Information Act, are declared to be available for public inspection and copying as provided in this part. Each member and employee of the A&TBCB is directed to cooperate to this end and to make records available to the public promptly and to the fullest extent consistent with this policy. A record may not be withheld from the public solely because its release might suggest administrative error or embarrass a member or employee of the A&TBCB.

(b) Subject to § 1120.51, any nonexempt A&TBCB record is available to the public upon request regardless of whether the requestor shows any justification or need for the record.

(c) An A&TBCB office may waive the procedures on this subpart in favor of the requestor, for reasons of the public interest, simplicity, or speed.

(d) If a requested record contains both exempt and nonexempt material, the nonexempt material shall be disclosed, after the exempt material has been deleted in accordance with § 1120.42.

§ 1120.22 Requests to which this subpart applies.

(a) This subpart applies to any written request (other than a request made by another Federal agency) received by the A&TBCB, whether or not the request cites the Freedom of Information Act, 5 U.S.C. 552, except with respect to records for which a less formal disclosure procedure is provided specifically in this part.

(b) Any written request to the A&TBCB for existing records prepared by the A&TBCB for routine public distribution, e.g., pamphlets, copies of speeches, press releases, and educational materials, shall be honored. No individual determination under § 1120.32 is necessary in these cases, since preparation of the materials for routine public distribution itself constitutes that a determination that the records are available to the public.

(c) This subpart applies only to records that exist at the time the request for information is made. (See § 1120.3, *Existing records.)*

§ 1120.23 Where requests for agency records must be filed.

A written request for records must be filed with the A&TBCB Freedom of Information Officer, Suite 501, 1111 18th Street NW., Washington, DC 20036. Requests may be mailed to that address or filed in person at that address during the A&TBCB's normal business hours.

[45 FR 80976, Dec. 8, 1980, as amended at 55 FR 2520, Jan. 25, 1990]

§ 1120.24 Misdirected written requests; oral requests.

(a) The A&TBCB cannot assure that a timely for satisfactory response under this subpart will be given to written requests that are addressed to A&TBCB offices, members, or employees other than the Freedom of Information Officer listed in § 1120.23. Any A&TBCB member or employee who receives a written request for inspection or disclosure of A&TBCB records must promptly forward a copy of the request to the Freedom of Information Officer, by the fastest practicable means, and must, if appropriate, commence action under § 1120.32.

(b) While A&TBCB members and employees will attempt in good faith to comply with oral requests for inspection or disclosure of A&TBCB records, by telephone or otherwise, these requests are not required to be processed in accordance with this subpart.

§ 1120.25 Form of requests.

A request must be in writing, must reasonably describe the records sought in a way that will permit their identification and location, and must be addressed to the address set forth in § 1120.23, but otherwise need not be in any particular form. Each request under the Freedom of Information Act should be clearly and prominently identified by a legend on the first page, such as ''Freedom of Information Act Request.'' The envelope in which the request is sent should be prominently marked with the letters ''FOIA.'' It is helpful, but not necessary, for the requestor to include his or her phone number and the reason for the request. A request may state the maximum amount of fees which the requester is willing to pay. Under § 1120.33(d), the failure to state willingness to pay fees as high as are anticipated by the A&TBCB will delay running of the time limit and delay processing of the request, if the responsible official anticipates that the fees chargeable may exceed $250.00.

[45 FR 80976, Dec. 8, 1980, as amended at 52 FR 43195, Nov. 10, 1987]

§ 1120.26 Deficient descriptions.

(a) If the description of the records sought in the request is not sufficient to allow the A&TBCB to identify and locate the requested records, the office taking action under § 1120.32 must notify the requestor (by telephone when practicable) that the request cannot be further processed until additional information is furnished.

(b) The A&TBCB must make every reasonable effort to assist the requestor in formulating his or her request. If a request is described in general terms (e.g., all records having to do with a certain area), the A&TBCB office taking action under § 1120.32 may communicate with the requestor (by telephone when practicable) with a view toward reducing the administrative burden of processing a broad request and minimizing the fee payable by the requestor. Such attempts must not be used as a means to discourage requests, but rather as a means to help identify with more specificity the records actually sought.

§ 1120.31 A&TBCB receipt of requests; responsibilities of Freedom of Information Officer.

(a) Upon receipt of a written request, the Freedom of Information Officer must mark the request with the date of receipt and must attach to the request a control slip indicating the Request Identification Number and other pertinent administrative information. The Freedom of Information Officer must immediately forward the request and control slip to the A&TBCB office which the FOIA Officer believes to be responsible for maintaining the records requested. The Freedom of Information Officer must retain a full copy of the request and control slip and must monitor the handling of the request to ensure a timely response.

(b) The Freedom of Information Officer must maintain a file concerning each request received. The file must contain a copy of the request, initial and appeal determinations, and other pertinent correspondence and records.

(c) The Freedom of Information Officer must collect and maintain the information necessary to compile the reports required by 5 U.S.C. 552(d).

§ 1120.32 A&TBCB action on requests.

(a) The FOIA Officer is delegated the authority to issue initial determinations concerning records which he or she believes are in the custody of a Board member, an employee of a member's agency, or an employee of a public member. When the FOIA Officer receives such a request, he or she shall forward it to the member, employee of a member agency, or employee of a public member whom the FOIA Officer believes to have custody of the records, requesting the records. The person to whom the request is forwarded shall, within three days of receipt of the FOIA Officer's request, either furnish the records requested to the FOIA Officer or inform the FOIA Officer of the time when they will be furnished. The FOIA Officer shall then determine whether or not to disclose the documents. For purposes of such requests and their processing under this subpart, the FOIA Officer is considered the office handling the requests.

(b) Heads of staff offices are delegated the authority to issue initial determinations, other records which are in their respective custody.

(c) Whenever an A&TBCB office receives a request forwarded by the FOIA Officer, the office should:

(1) Take action under § 1120.26, if required, to obtain a better description of the records requested;

(2) Locate the records as promptly as possible, or determine that:

(i) The records are not known to exist; or

(ii) They are located at another A&TBCB office; or

(iii) They are located at another Federal agency and not possessed by the A&TBCB.

(3) When appropriate, take action under § 1120.53(b) to obtain payment or assurance of payment;

(4) Determine which of the requested records legally must be withheld, and why (see § 1120.42(b), *Release of exempt documents*);

(5) Of the requested records which are exempt from mandatory disclosure but which legally may be disclosed (see § 1120.42(a)), determine which records will be withheld, and why;

(6) Issue an initial determination within the allowed period (see § 1120.31), specifying (individually or by category) which records will be disclosed and which will be withheld, and signed by a person authorized to issue the determination under paragraph (a) of this section (see § 1120.33, *Initial denials of requests*);

(7) Furnish the Freedom of Information Officer a copy of the determination; and

(8) If the determination denies a request, furnish the Freedom of Information Officer the name of the A&TBCB member(s) or employee(s) having custody of the records and maintain the records in a manner permitting their prompt forwarding to the General Counsel upon request if an appeal from the initial denial is filed. (See also § 1120.34.)

(d) If it appears that some or all of the requested records are not in the possession of the A&TBCB office which has been assigned responsibility for responding to the request but may be in the possession of some A&TBCB office, the responding office must so inform

the Freedom of Information officer immediately.

(e) An initial determination to disclose documents must provide the requested documents or provide the opportunity to inspect and/or obtain copies of the documents.

§ 1120.33 Time allowed for initial action on requests.

(a) Except as otherwise provided in this section, as soon as possible and not later than the tenth working day after the day on which the Freedom of Information Officer receives a request for records, the A&TBCB office responsible for responding to the request must issue a written determination to the requestor stating which of the requested records, will, and which will not, be released and the reason for any denial of a request.

(b) The period of 10 working days is measured from the date the request is first received and logged in by the Freedom of Information Officer.

(c) There is excluded from the period of 10 working days (or any extension) any time which elapses between the date that a requestor is notified by the A&TBCB under § 1120.26 that his or her request does not reasonably identify the records sought, and the date that the requestor furnishes a reasonable identification.

(d) There is excluded from the period of 10 working days (or any extension) any time which elapses between the date that a requestor is notified by an A&TBCB office under § 1120.53(b) that prepayment of fees is required, and the date that the requestor pays (or makes suitable arrangements to pay) the charges.

(e) The A&TBCB office taking action under § 1120.31 may extend the basic 10-day period established under paragraph (a) of this section by a period not to exceed 10 additional working days if—

(1) The office notifies the Freedom of Information Officer;

(2) The office notifies the requestor in writing within the basic 10-day period stating the reasons for the extension and the date by which the office expects to be able to issue a determination;

(3) The extension is reasonably necessary to properly process the particular request; and

(4) One or more of the following unusual circumstances require the extension:

(i) There is a need to search for and collect the requested records from field facilities or other establishments that are separate from the office processing the request;

(ii) There is a need to search for, collect, and/or appropriately examine a voluminous amount of separate and distinct records which are demanded in a single request; or

(iii) There is need for consultation with another agency having a substantial interest in the determination of the request or among two or more components of the A&TBCB. The office must conduct the consultation with all practicable speed.

(f) Should the A&TBCB fail to issue a determination within the 10-day period or any authorized extension as to an initial request, or during the period for consideration of an appeal, the requestor shall be deemed to have exhausted his or her administrative remedies with respect to such.

In the latter situation, the requestor may commence an action in an appropriate Federal district court to obtain the records.

§ 1120.34 Initial denials of requests.

(a) An initial denial of a request may be issued only for the following reasons:

(1) The record is not under the A&TBCB's control;

(2) The record has been published in the FEDERAL REGISTER or is otherwise published and available for sale;

(3) A statutory provision, provision of this part, or court order requires that the information not be disclosed;

(4) The record is exempt from mandatory disclosure under 5 U.S.C. 552(b) and the responding office has decided not to disclose it under §§ 1120.41 and 1120.42;

(5) The record is believed to be in the A&TBCB's custody but has not yet been located. (See paragraph (f) of this section.)

(b) Each initial denial of a request shall—

(1) Be written, signed, and dated;

(2) Contain a reference to the Request Identification Number;

(3) Identify the records that are being withheld (individually or, if the denial covers a large number of similar records, by described category); and

(4) State the basis for denial of each record of category of records or any reasonably segregable portion(s) thereof being withheld.

(c) If the issuance of the determination to deny a request was directed by some A&TBCB officer or employee other than the person signing the determination letter, that other person's identity and position must be stated in the determination letter.

(d) Each initial determination which denies, in whole or in part, a request for one or more existing, located A&TBCB records must state that the requestor may appeal the initial denial by sending a written appeal to the address shown in § 1120.23 within 30 days of receipt of the determination. (See § 1120.36.)

(e) A determination is deemed issued on the date the determination letter is placed in A&TBCB mailing channels for first class mailing to the requestor, delivered to the U.S. Postal Service for mailing, or personally delivered to the requestor, whichever date first occurs.

(f) When a request must be denied because the record has not yet been located (although it is believed to be in the A&TBCB's possession), the A&TBCB office responsible for maintaining the record must continue to search diligently until it is located or it appears that the record does not exist or is not in the A&TBCB's possession, and must periodically inform the requestor of the office's progress.

§ 1120.36 Appeals from initial denials.

(a) Any person whose request has been denied in whole or in part by an initial determination may appeal that denial by addressing a written appeal to the address shown in § 1120.23.

(b) Any appeal must be mailed or filed in person at the address shown in § 1120.23—

(1) In the case of a denial of an entire request, generally not later than 30 calendar days after the date the requestor received the initial determination on the request; or

(2) In the case of a partial denial, generally not later than 30 calendar days after the requestor receives all records being made available pursuant to the initial determination.

An appeal which does not meet the requirements of this paragraph may be treated either as a timely appeal or as a new request, at the option of the Freedom of Information Officer.

(c) The appeal letter must contain—

(1) A reference to the Request Identification Number (RIN);

(2) The date of the initial determination;

(3) The name and address of the person who issued the initial denial;

(4) A statement of which of the records to which access was denied are the subjects of the appeal; and

(5) If the applicant wishes, such facts and legal or other authorities as he or she considers appropriate.

§ 1120.37 A&TBCB action on appeals.

(a) The General Counsel must make one of the following legal determinations in connection with every appeal from the initial denial of a request for an existing, located record:

(1) The record must be disclosed;

(2) The record must not be disclosed because a statute or a provision of this part so requires; or

(3) The record is exempt from mandatory disclosure but legally may be disclosed as a matter of agency discretion.

(b) Whenever the General Counsel has determined under paragraph (a)(3) of this section that a record is exempt from mandatory disclosure but legally may be disclosed, the matter must be referred to the Executive Director. If the Executive Director determines that an important purpose would be served by withholding the record, the General Counsel shall issue a determination denying the appeal. If the Executive Director determines that no important purpose would be served by withholding the record, the General Counsel must disclose the record.

(c) The General Counsel may delegate his or her authority under this section to any other attorney employed by the A&TBCB in connection

with any cateogory of appeals or any individual appeals.

(d) A determination denying an appeal from an initial denial must—

(1) Be in writing;

(2) State which of the exemptions in 5 U.S.C. 552(b) apply to each requested existing record;

(3) State the reason(s) for denial of the appeal;

(4) State the name and position of each A&TBCB officer or employee who directed that the appeal be denied; and

(5) State that the person whose request was denied may obtain de novo judicial review of the denial by complaint filed with the district court of the United States in the district in which the complainant resides, or in which the agency records are situated, or in the District of Columbia, pursuant to 5 U.S.C. 552(a)(4).

§ 1120.38 Time allowed for action on appeals.

(a) Except as otherwise provided in this section, as soon as possible and not later than the twentieth working day after the day on which the Freedom of Information Officer receives an appeal from an initial denial of a request for records, the General Counsel shall issue a written determination stating which of the requested records (as to which appeal was made) will and which will not be disclosed.

(b) The period of 20 working days shall be measured from the date an appeal is first received by the Freedom of Information Officer.

(c) The General Counsel may extend the basic 20-day period established under paragraph (a) of this section by a period not to exceed 10 additional working days if—

(1) He or she notifies the Freedom of Information Officer;

(2) He or she notifies the requestor in writing within the basic 20-day period stating the reasons for the extension and the date by which he or she expects to be able to issue a determination;

(3) The extension is reasonably necessary to properly process the particular request; and

(4) One or more of the following unusual circumstances require the extension:

(i) There is a need to search for and collect the records from field facilities or other establishments that are separated from the office processing the appeal;

(ii) There is a need to search for, collect, and/or appropriately examine a voluminous amount of separate and distinct records which are demanded in a single request; or

(iii) There is a need for consultation with another agency or among two or more components of the A&TBCB. The General Counsel must conduct the consultation with all practicable speed.

(d) No extension of the 20-day period may be issued under paragraph (c) of this section which would cause the total of all such extensions and of any extensions issued under § 1120.33(c) to exceed 10 working days.

§ 1120.41 Exempt documents.

(a) Generally, 5 U.S.C. 552(b) establishes nine exclusive categories of matters which are exempt from the mandatory disclosure requirements of 5 U.S.C. 552(a). No request under 5 U.S.C. 552 for an existing, located, unpublished record in the A&TBCB's control may be denied by any A&TBCB office or employee unless the record contains (or its disclosure would reveal) matters that are—

(1) Specifically authorized under criteria established by an Executive order to be kept secret in the interest of national defense or foreign policy and which are in fact properly classified pursuant to the Executive order;

(2) Related solely to the internal personnel rules and practices of an agency;

(3) Specifically exempted from disclosure by statute;

(4) Trade secrets and commercial or financial information obtained from a person and privileged or confidential;

(5) Interagency or intra-agency memorandums or letters which would not be available by law to a party other than an agency in litigation with the agency;

(6) Personnel and medical files and similar files the disclosure of which would constitute a clearly unwarranted invasion of personal privacy;

(7) Investigatory records compiled for law enforcement purposes, but only to

the extent that the production of such records would—

(i) Interfere with enforcement proceedings;

(ii) Deprive a person of a right to a fair trial or an impartial adjudication;

(iii) Constitute an unwarranted invasion of personal privacy;

(iv) Disclose the identity of a confidential source and, in the case of a record compiled by a criminal law enforcement authority in the course of a criminal investigation or by an agency conducting a lawful national security intelligence investigation, confidential information furnished only by the confidential source;

(v) Disclose investigative techniques and procedures; or

(vi) Endanger the life or physical safety of law enforcement personnel;

(8) Contained in or related to examination, operating, or condition reports prepared by, on behalf of, or for the use of an agency responsible for the regulation or supervision of financial institutions; or

(9) Geological and geophysical information and data, including maps, concerning wells.

(b) The fact that the applicability of an exemption permits the withholding of a requested record (or portion of a record) does not necessarily mean that the record must or should be withheld. (See § 1120.42 *Release of exempt documents.)*

§ 1120.42 Release of exempt documents.

(a) An A&TBCB office may, in its discretion, release requested records despite the applicability of one or more of the exemptions listed in § 1120.41 (a)(2), (5), or (7). Disclosure of such records is encouraged if no important purpose would be served by withholding the records.

(b) Though the policy of the A&TBCB is to honor all requests, as indicated in § 1120.21(a), there are circumstances when the A&TBCB will not disclose a record if one or more of the FOIA exemptions applies to the record. The exemptions usually in such circumstances are exemptions (2), (3), (4), (6), (8) and (9). In these cases, where the A&TBCB has withheld a requested record, or portions thereof, the A&TBCB will disclose the exempted record when ordered to do so by a Federal court or in exceptional circumstances under appropriate restrictions with the approval of the Office of General Counsel.

Subpart E—Copies of Records and Fees for Services

§ 1120.51 Charges for services, generally.

(a) It shall be the policy of the ATBCB to comply with requests for documents made under the FOIA using the most efficient and least costly methods available. Requesters will be charged fees, in accordance with the administrative provisions and fee schedule set forth below, for searching for, reviewing (in the case of commercial use requesters only), and duplicating requested records.

(b) *Categories of requesters.* For the purpose of standard FOIA fee assessment, the four categories of requesters are: Commercial use requesters; educational and non-commercial scientific institution requesters; requesters who are representatives of the news media; and, all other requesters (see § 1120.2 (l) through (o), Definitions).

(c) *Levels of fees.* Levels of fees prescribed for each category of requester are as follows:

(1) Commercial Use Requesters—When the ATBCB receives a request for documents which appears to be a request for commercial use, the Board may assess charges in accordance with the fee schedule set forth below, which recover the full direct costs of searching for, reviewing for release, and duplicating the records sought. Costs for time spent reviewing records to determine whether they are exempt from mandatory disclosure applies to the initial review only. No fees will be assessed for reviewing records, at the administrative appeal level, of the exemptions already applied.

(2) Educational and Non-Commercial Scientific Institution Requesters—The ATBCB shall provide documents to requesters in this category for the cost of reproduction alone, in accordance with the fee schedule set forth below, excluding charges for the first 100 pages of reproduced documents.

(i) To be eligible for inclusion in this category, requesters must demonstrate the request is being made under the auspices of a qualifying institution and that the records are not sought for a commercial use, but are sought in furtherance of scholarly (if the request is from an educational institution) or scientific (it the request is from a noncommercial scientific institution) research.

(ii) Requesters eligible for free search must reasonably describe the records sought.

(3) Requesters Who Are Representatives of the News Media—The ATBCB shall provide documents to requesters in this category for the cost of reproduction alone, in accordance with the fee schedule set forth below, excluding charges for the first 100 pages of reproduced documents.

(4) All Other Requestors—The ATBCB shall charge requestors who do not fit into any of the categories described above, fees which recover the full direct cost of searching for and reproducing records that are responsive to the request, except that the first two hours of search time and the first 100 pages of reproduction shall be furnished without charge.

(d) Schedule of FOIA fees.

(1) Record search (ATBCB employees)—$14.00 per hour

(2) Document review (ATBCB employees)—$20.00 per hour

(3) Duplication of documents (paper copy of paper original)—$.20 per page

(e) No charge shall be made:

(1) If the costs of routine collection and processing of the fee are likely to equal or exceed the amount of the fee;

(2) For any request made by an individual or group of individuals falling into the categories listed at paragraph (b) of this section, and described in paragraph (c) of this section, (excepting commercial use requests) the first two hours of search time and first 100 pages of duplication;

(3) For the cost of preparing or reviewing letters of response to a request or appeal;

(4) For responding to a request for one copy of the official personnel record of the requestor;

(5) For furnishing records requested by either House of Congress, or by duly authorized committee or subcommittee or Congress, unless the records are requested for the benefit of an individual Member of Congress or for a constituent;

(6) For furnishing records requested by and for the official use of other Federal agencies; or

(7) For furnishing records needed by an A&TBCB contractor or grantee to perform the work required by the A&TBCB contract or grant.

(f) Requestors may be charged for unsuccessful or unproductive searches or for searches when records located are determined to be exempt from disclosure.

(g) Where the ATBCB reasonably believes that a requestor or group of requestors is attempting to break a request down into a series of requests for the purpose of evading the assessment of fees, the ATBCB shall aggregate any such requests and charge accordingly.

[55 FR 2520, Jan. 25, 1990]

§ 1120.52 Computerized records.

(a) Information available in whole or in part in computerized form which is disclosable under the Freedom of Information Act is available to the public as follows:

(1) When there is an existing printout from the computer which permits copying the printout, the material will be made available at the per page rate stated in § 1120.51(a) for each 8½ by 11 inch page.

(2) When there is not an existing printout of information disclosable under the Freedom of Information Act, a printout shall be made if the applicant pays the cost to the A&TBCB as stated in paragraph (a)(3) of this section.

(3) Obtaining information from computerized records frequently involves a minimum computer time cost of approximately $100 per request. Multiple requests involving the same subject may cost less per request. Services of personnel in the nature of a search shall be charged for at rates prescribed in § 1120.51(a). A charge shall be made for the computer time involved based upon the prevailing level of costs to Government organizations and upon the particular types of computer and associated equipment and the amounts

of time on such equipment that are utilized. A charge shall also be made for any substantial amounts of special supplies or materials used to contain, present, or make available the output of computers based upon the prevailing levels of costs to Government organizations and upon the type and amount of the supplies and materials that are used.

(b) Information in the Board's computerized records which could be produced only by additional programming of the computer, thus producing information not previously in being, is not required to be furnished under the Freedom of Information Act. In view of the usually heavy workloads of the computers used by the Board, such a service cannot ordinarily be offered to the public.

§ 1120.53 Payment of fees.

(a) *Method of payment.* All fee payments shall be in the form of a check or money order payable to the order of the ''U.S. Architectural and Transportation Barriers Compliance Board'' and shall be sent (accompanied by a reference to the pertinent Request Indentification Number(s)) to the address in § 1120.23.

(b) *Charging interest.* The ATBCB may charge interest to those requestors failing to pay fees assessed in accordance with the procedures described in § 1120.51. Interest charges, computed at the rate prescribed in section 3717 of title 31 U.S.C.A., will be assessed on the full amount billed starting on the 31st day following the day on which the bill was sent.

(c) *Advance payment or assurance of payment.* (1) When an ATBCB office determines or estimates that the allowable charges a requestor may be required to pay are likely to exceed $250.00, the ATBCB may require the requestor to make an advance payment or arrangements to pay the entire fee before continuing to process the request. The ATBCB shall promptly inform the requestor (by telephone, if practicable) of the need to make an advance payment or arrangements to pay the fee. That office need not search for, review, duplicate, or disclose records in response to any request by that requestor until he or she pays, or makes acceptable arrangements to pay, the total amount of fees due (or estimated to become due) under this subpart.

(2) Where a requestor has previously failed to pay a fee charged in a timely fashion, the ATBCB may require the requestor to pay the full amount owed, plus any applicable interest, as provided in paragraph (b) of this section, and to make an advance payment of the full amount of the estimated fee before any new or pending requests will be processed from that requestor.

(3) In those instances described in paragraphs (c)(1) and (2) of this section, the administrative time limits prescribed in § 1120.33(d) will begin only after the ATBCB has received all fee payments due or acceptable arrangements have been made to pay all fee payments due.

(d) *Effect of the Debt Collection Act of 1982 (Pub. L. 97–365).* Requestors are advised that the ATBCB shall use the authorities of the Debt Collection Act of 1982, including disclosure to consumer reporting agencies and use of collection agencies, where appropriate, to encourage repayment of debts arising from freedom of information act requests.

(e) *Waiver or reduction of fees.* (1) Records responsive to a request under 5 U.S.C. 552 shall be furnished without charge or at a charge reduced below that establsihed under paragraph (d) of § 1120.51 where the Freedom of Information Officer determines, based upon information provided by a requestor in support of a fee waiver request or otherwise made known to the Freedom of Information Officer, that disclosure of the requested information is in the public interest because it is likely to contribute significantly to public understanding of the operations or activities of the government and is not primarily in the commercial interest of the requestor. Requests for a waiver or reduction of fees shall be considered on a case-by-case basis.

(2) In order to determine whether the first fee waiver requirement is met—i.e., that disclosure of the requested information is in the public interest because it is likely to contribute significantly to public understanding of the operations or activities of the government—Freedom of Information Officer

shall consider the following four factors in sequence:

(i) The subject of the request: Whether the subject of the requested records concerns ''the operations or activities of the government.'' The subject matter of the requested records, in the context of the request, must specifically concern identifiable operations or activities of the federal government—with a connection that is direct and clear, not remote or attenuated. Furthermore, the records must be sought for their informative value with respect to those government operations or activities; a request for access to records for their intrinsic informational content alone will not satisfy this threshold consideration.

(ii) The informative value of the information to be disclosed: Whether the disclosure is ''likely to contribute'' to an understanding of government operations or activities. The disclosable portions of the requested records must be meaningfully informative on specific government operations or activities in order to hold potential for contributing to increase public understanding of those operations and activities. The disclosure of information that already is in the public domain, in either a duplicative or a substantially identical form, would not be likely to contribute to such understanding, as nothing new would be added to the public record.

(iii) The contribution to an understanding of the subject by the public likely to result from disclosure: Whether disclosure of the requested information will contribute to ''public understanding.'' The disclosure must contribute to the understanding of the public at large, as opposed to the individual understanding of the requestor or a narrow segment of interested persons. A requestor's identity and qualifications—e.g., expertise in the subject area and ability and intention to effectively convey information to the general public—should be considered. It reasonably may be presumed that a representative of the news media (as defined in § 1120.2(o)) who has access to the means of public dissemination readily will be able to satisfy this consideration. Requests from libraries or other record repositories (or requestors who intend merely to disseminate information to such institutions) shall be analyzed, like those of other requestors to identify a particular person who represents that he actually will use the requested information in scholarly or other analytic work and then disseminate it to the general public.

(iv) The significance of the contribution to public understanding: Whether the disclosure is likely to contribute ''significantly'' to public understanding of government operations or activities. The public's understanding of the subject matter in question, as compared to the level of public understanding existing prior to the disclosure, must be likely to be enhanced by the disclosure to a significant extent. Freedom of Information Officer shall not make separate value judgments as to whether information, even though it in fact would contribute significantly to public understanding of the operations or activities of the government, is ''important'' enough to be made public.

(3) In order to determine whether the second fee waiver requirement is met—i.e., that disclosure of the requested information is not primarily in the commercial interest of the requestor—the Freedom of Information Officer shall consider the following two factors in sequence:

(i) The existence and magnitude of a commercial interest: Whether the requestor has a commercial interest that would be furthered by the requested disclosure. The Freedom of Information Officer shall consider all commercial interests of the requester (with reference to the definition of ''commercial use'' in § 1120.2(l)) or any person on whose behalf the requestor may be acting, but shall consider only those interests which would be furthered by the requested disclosure. In assessing the magnitude of identified commercial interests, consideration shall be given to the role that such FOIA-disclosed information plays with respect to those commercial interests, as well as to the extent to which FOIA disclosures serve those interests overall. Requestors shall be given a reasonable opportunity in the administrative process to provide information bearing upon this consideration.

(ii) The primary interest in disclosure: Whether the magnitude of the identified commercial interest of the requestor is sufficiently large, in comparison with the public interest in disclosure, that disclosure is ''primarily in the commercial interest of the requestor.'' A fee waiver or reduction is warranted only where, once the ''public interest'' standard set out in paragraph (e)(2) of this section is satisfied, that public interest can fairly be regarded as greater in magnitude than that of the requestor's commercial interest in disclosure. The Freedom of Information Officer shall ordinarily presume that where a news media requestor has satisfied the ''public interest'' standard, that will be the interest primarily served by disclosure to that requestor. Disclosure to data brokers or others who compile and market government information for direct economic return shall not be presumed to primarily serve ''public interest.''

(4) Where only a portion of the requested records satisfies both of the requirements for a waiver or reduction of fees under this paragraph, a waiver or reduction shall be granted only as to that portion.

(5) Requests for the waiver or reduction of fees shall address each of the factors listed in paragraphs (e) (2) and (3) of this section, as they apply to each record request. One hundred pages of reproduction shall be furnished without charge.

(6) A request for reduction or waiver of fees shall be addressed to the Freedom of Information Officer at the address shown in § 1120.23. The ATBCB office which is responding to the request for records shall initially determine whether the fee shall be reduced or waived and shall so inform the requestor. The initial determination may be appealed by letter addressed to the address shown in § 1120.23. The General Counsel or his or her designee shall decide such appeals.

[45 FR 80976, Dec. 8, 1980, as amended at 52 FR 43196, Nov. 10, 1987; 55 FR 2521, Jan. 25, 1990]

PART 1121—PRIVACY ACT IMPLEMENTATION

Sec.
1121.1 Purpose and scope.
1121.2 Definitions.
1121.3 Procedures for requests pertaining to individuals' records in a records system.
1121.4 Times, places, and requirements for the identification of the individual making a request.
1121.5 Access to requested information to the individual.
1121.6 Request for correction or amendment to the record.
1121.7 Agency review of request for correction or amendment of the record.
1121.8 Appeal of an initial adverse agency determination on correction or amendment of the record.
1121.9 Notification of dispute.
1121.10 Disclosure of record to a person other than the individual to whom the record pertains.
1121.11 Accounting of disclosures.
1121.12 Fees.

AUTHORITY: 5 U.S.C. 552a; Pub. L. 93–579.

SOURCE: 50 FR 3905, Jan. 29, 1985, unless otherwise noted.

§ 1121.1 Purpose and scope.

The purposes of these regulations are to:

(a) Establish a procedure by which an individual can determine if the Architectural and Transportation Barriers Compliance Board, hereafter known as the Board or ATBCB, maintains a system of records which includes a record pertaining to the individual; and

(b) Establish a procedure by which an individual can gain access to a record pertaining to him or her for the purpose of review, amendment and/or correction.

§ 1121.2 Definitions.

For the purpose of these regulations—

(a) The term *individual* means a citizen of the United States or an alien lawfully admitted for permanent residence.

(b) The term *maintain* includes maintain, collect, use or disseminate.

(c) The term *record* means any item, collection or grouping of information about an individual that is maintained by the Board, including, but not limited to, his or her employment history, payroll information, and financial

transactions and that contains his or her name, or the identifying number, symbol, or other identifying particular assigned to the individual, such as social security number.

(d) The term *system of records* means a group of any records under control of the Board from which information is retrieved by the name of the individual or by some identifying number, symbol, or other identifying particular assigned to the individual.

(e) The term *routine use* means, with respect to the disclosure of a record, the use of such record for a purpose which is compatible with the purpose for which it was collected.

(f) The term *authorized representative* means a person who acts on an *individual's* behalf for purposes of these regulations, pursuant to written, signed instructions from the individual.

§ 1121.3 Procedures for requests pertaining to individuals' records in a records system.

An individual or authorized representative shall submit a written request to the Administrative Officer to determine if a system of records named by the individual contains a record pertaining to the individual. The individual or authorized representative shall submit a written request to the Executive Director of the ATBCB which states the individual's desire to review his or her record.

§ 1121.4 Times, places, and requirements for the identification of the individual making a request.

An individual or authorized representative making a request to the Administrative Officer of the ATBCB pursuant to § 1121.3 shall present the request at the ATBCB offices, 330 C Street, SW., Room 1010, Washington, DC 20202, on any business day between the hours of 9 a.m. and 5:30 p.m. The individual or authorized representative submitting the request should present himself or herself at the ATBCB's offices with a form of identification which will permit the ATBCB to verify that the individual is the same individual as contained in the record requested. An authorized representative shall present a written document authorizing access. The document must be signed by the individual.

§ 1121.5 Access to requested information to the individual.

Upon verification of identity the Board shall disclose to the individual or authorized representative the information contained in the record which pertains to that individual. Nothing in this section shall allow an individual access to any information compiled in reasonable anticipation of a civil action or proceeding.

§ 1121.6 Request for correction or amendment to the record.

The individual or authorized representative should submit a request to the Administrative Officer which states the individual's desire to correct or to amend his or her record. This request is to be made in accord with provisions of § 1121.4.

§ 1121.7 Agency review of request for correction or amendment of the record.

Within ten working days of the receipt of the request to correct or to amend the record, the Administrative Officer will acknowledge in writing such receipt and promptly either—

(a) Make any correction or amendment of any portion thereof which the individual believes is not accurate, relevant, timely, or complete; or

(b) Inform the individual or authorized representative of his or her refusal to correct or to amend the record in accordance with the request, the reason for the refusal and the procedures established by the Board for the individual to request a review of that refusal.

§ 1121.8 Appeal of an initial adverse agency determination on correction or amendment of the record.

An individual who disagrees with the refusal of the Administrative Officer to correct or to amend his or her record may submit a request for a review of such refusal to the Executive Director, ATBCB, 330 C Street, SW., Room 1010, Washington, DC 20202. The Executive Director will, not later than thirty (30) working days from the date on which the individual requests such review,

complete such review and make final determination, unless, for good cause shown, the Executive Director extends such thirty-day period. If, after his or her review, the Executive Director also refuses to correct or to amend the record in accordance with the request, the Board shall permit the individual or authorized representative to file with the Executive Director a concise statement setting forth the reasons for his or her disagreement with the refusal of the Executive Director and shall notify the individual or authorized representative that he or she may seek judicial review of the Executive Director's determination under 5 U.S.C. 552a(g)(1)(A).

§ 1121.9 Notification of dispute.

In any disclosure pursuant to § 1121.10 containing information about which the individual has previously filed a statement of disagreement under § 1121.8, the Board shall clearly note any portion of the record which is disputed and provide copies of the statement and, if the Executive Director deems it appropriate, copies of a concise statement of the reasons of the Executive Director for not making the amendments requested.

§ 1121.10 Disclosure of record to a person other than the individual to whom the record pertains.

The Board will not disclose a record to any individual or agency other than the individual to whom the record pertains, except to an authorized representative, unless the disclosure has been listed as a ''routine use'' in the Board's notices of its systems of records, or falls within one of the special disclosure situations listed in the Privacy Act of 1974 (5 U.S.C. 552a(b)).

§ 1121.11 Accounting of disclosures.

(a) The Board shall, except for disclosure made under sections (b)(1) and (b)(2) of the Privacy Act of 1974 (5 U.S.C. 552a) keep an accurate accounting of—

(1) The date, nature and purpose of each disclosure of a record to any person or another agency made pursuant to § 1121.10; and

(2) The name and address of the person or agency to whom the disclosure is made.

(b) This accounting shall be retained for at least five years or the life of the record, whichever is longer, after the disclosure for which the accounting is made;

(c) The Board shall make this accounting available to the individual named in the record at his or her request, except for disclosures made under section (b)(7) of the Privacy Act of 1974 (5 U.S.C. 552a).

(d) The Board shall inform any person or other agency to whom disclosure has been made pursuant to § 1121.10 about any correction or notation of dispute made by the Board.

§ 1121.12 Fees.

If an individual or authorized representative requests copies of his or her record, he or she shall be charged ten cents per page, excluding the cost of any search for review of the record, in advance of receipt of the pages.

PART 1150—PRACTICE AND PROCEDURES FOR COMPLIANCE HEARINGS

Subpart A—General Information

Sec.
1150.1 Purpose.
1150.2 Applicability: Buildings and facilities subject to guidelines and standards.
1150.3 Policy of amicable resolution.
1150.4 Definitions.
1150.5 Scope and interpretation of rules.
1150.6 Suspension of rules.

Subpart B—Parties, Complainants, Participants

1150.11 Parties.
1150.12 Complainants.
1150.13 Participation on petition.
1150.14 Appearance.

Subpart C—Form, Execution, Service and Filing of Documents for Proceedings on Citations

1150.21 Form of documents to be filed.
1150.22 Signature of documents.
1150.23 Filing and service.
1150.24 [Reserved]
1150.25 Date of service.
1150.26 Certificate of service.

Subpart D—Time

1150.31 Computation.
1150.32 Extension of time or postponement.

Subpart E—Proceedings Prior to Hearings; Pleadings and Motions

1150.41 Informal resolution.
1150.42 Citations.
1150.43 Answers.
1150.44 Amendments.
1150.45 Request for hearing.
1150.46 Motions.
1150.47 Disposition of motions and petitions.
1150.48 PER: Citation, answer, amendment.

Subpart F—Responsibilities and Duties of Judge

1150.51 Who presides.
1150.52 Authority of judge.
1150.53 Disqualification of judge.

Subpart G—Prehearing Conferences and Discovery

1150.61 Prehearing conference.
1150.62 Exhibits.
1150.63 Discovery.

Subpart H—Hearing Procedures

1150.71 Briefs.
1150.72 Purpose of hearing.
1150.73 Testimony.
1150.74 Exclusion of evidence.
1150.75 Objections.
1150.76 Exceptions.
1150.77 Official notice.
1150.78 Public documents.
1150.79 Offer of proof.
1150.80 Affidavits.
1150.81 Consolidated or joint hearing.
1150.82 PER proceedings.

Subpart I—The Record

1150.91 Record for decision.
1150.92 Official transcript.

Subpart J—Posthearing Procedures; Decisions

1150.101 Posthearing briefs; proposed findings.
1150.102 Decision.
1150.103 PER: Posthearing briefs, decision.
1150.104 Judicial review.
1150.105 Court enforcement.

Subpart K—Miscellaneous Provisions

1150.111 Ex parte communications.
1150.112 Post-order proceedings.
1150.113 Amicable resolution.
1150.114 Effect of partial invalidity.

AUTHORITY: 29 U.S.C. 792, as amended.

SOURCE: 45 FR 78474, Nov. 25, 1980, unless otherwise noted.

Subpart A—General Information

§ 1150.1 Purpose.

Purpose. The purpose of the regulations in this part is to implement section 502(b)(1) of the Rehabilitation Act of 1973, Pub. L. 93–112, 29 U.S.C. 792, *as amended by* the Rehabilitation, Comprehensive Services, and Developmental Disabilities Amendments of 1978, Pub. L. 95–602, section 118, 92 Stat. 2979, by establishing rules of procedure for public hearings which ensure compliance with standards issued under the Architectural Barriers Act of 1968, Pub. L. 90–480, as amended, 42 U.S.C. 4151 *et seq*. (including standards of the U.S. Postal Service).

§ 1150.2 Applicability: Buildings and facilities subject to guidelines and standards.

(a) *Definitions*. As used in this section, the term:

Constructed or altered on behalf of the United States means acquired by the United States through lease-purchase arrangement, constructed or altered for purchase by the United States, or constructed or altered for the use of the United States.

Primarily for use by able-bodied military personnel means expected to be occupied, used, or visited principally by military service personnel. Examples of buildings so intended are barracks, officers' quarters, and closed messes.

Privately owned residential structure means a single or multi-family dwelling not owned by a unit or subunit of Federal, state, or local government.

(b) *Buildings and facilities covered*. Except as provided in paragraph (c) of this section, the standards issued under the Architectural Barriers Act of 1968, Pub. L. 90–480, as amended, 42 U.S.C. 4151 *et seq*. (including standards of the United States Postal Service) apply to any building or facility—

(1) The intended use for which either—

(i) Will require that such building or facility be accessible to the public, or

(ii) May result in employment or residence therein of physically handicapped persons; and

(2) Which is—

(i) To be constructed or altered by or on behalf of the United States;

(ii) To be leased in whole or in part by the United States—

(A) After August 12, 1968, and before January 1, 1977, after construction or alteration in accordance with plans and specifications of the United States; or

(B) On or after January 1, 1977, including any renewal of a lease entered into before January 1, 1977, which renewal is on or after such date;

(iii) To be financed in whole or in part by a grant or loan made by the United States after August 12, 1968, if the building or facility may be subject to standards for design, construction, or alteration issued under the law authorizing the grant or loan; or

(iv) To be constructed under the authority of the National Capital Transportation Act of 1960, the National Capital Transportation Act of 1965, or title III of the Washington Metropolitan Area Transit Regulation Compact.

(c) *Buildings and facilities not covered.* The standards do not apply to—

(1) Any privately owned residential structure, unless it is leased by the Federal government on or after January 1, 1977, for subsidized housing programs; or

(2) Any building or facility on a military installation designed and constructed primarily for use by military personnel.

(d) Any covered building or facility, as provided in this section, which is designed, constructed, or altered after the effective date of a standard issued which is applicable to the building or facility, shall be designed, constructed, altered, or leased in accordance with the standard. For purposes of this section, any design, construction, alteration or lease for which bids or offers are received before the effective date of an applicable standard, in response to an invitation for bids or request for proposals, is not subject to that standard.

§ 1150.3 Policy of amicable resolution.

The policy of the Architectural and Transportation Barriers Compliance Board is to maximize the accessibility and usability of buildings, and facilities through amicable means. To this end, the Architectural and Transportation Barriers Compliance Board encourages voluntary and informal resolution of all complaints.

§ 1150.4 Definitions.

A&TBCB means the Architectural and Transportation Barriers Compliance Board.

Agency means Federal department, agency, or instrumentality as defined in sections 551(1) and 701(b)(1) of title 5 U.S.C., or an agency official authorized to represent the agency. It includes any executive department or independent establishment in the Executive Branch of the government, including wholly owned government corporations, and any establishment in the legislative or judicial branch of the government, except the Senate, the House of Representatives, and the Architect of the Capitol and any activities under his direction.

Alteration means any change in a building or facility or its permanent fixtures or equipment. It includes, but is not limited to, remodeling, renovation, rehabilitation, reconstruction, changes or rearrangement in structural parts, and extraordinary repairs. It does not include normal maintenance, reroofing, interior decoration, or changes to mechanical systems.

Architectural Barriers Act means the Architectural Barriers Act of 1968, Pub. L. 90–480, as amended, 42 U.S.C. 4151 *et seq.*

Building or facility means all or any portion of buildings, structures, equipment, roads, walks, parking lots, parks, sites, or other real property or interest in such property.

Chair means the Chair of the A&TBCB.

Complaint means any written notice of an alleged violation, whether from an individual or organization, or other written information reasonably indicating to the Executive Director a violation of the standard.

Construction means any section of a new building or an addition to an existing building.

Day means calendar day.

Executive Director means the A&TBCB Executive Director.

Extraordinary repair means the replacement or renewal of any element of an existing building or facility for purposes other than normal maintenance.

Judge means an Administrative Law Judge appointed by the A&TBCB and assigned to the case in accordance with either section 3105 or 3314 of title 5 U.S.C.

PER means Provisional Expedited Relief.

Respondent means a party answering the citation, including PER Citation.

Section 502 of the Rehabilitation Act means section 502 of the Rehabilitation Act of 1973, Pub. L. 93–112, 29 U.S.C. 792, as amended.

Standard means any standard for accessibility and usability prescribed under the Architectural Barriers Act.

[53 FR 39473, Oct. 7, 1988]

§ 1150.5 Scope and interpretation of rules.

(a) These rules shall govern all compliance proceedings held before a judge and all alleged violations coming to the Executive Director as a complaint.

(b) In the absence of a specific provision in these rules, procedure shall be in accordance with the Administrative Procedure Act, subchapter II of chapter 5 and chapter 7, of title 5 U.S.C., and the Federal Rules of Civil Procedure, in that order.

(c) These rules and regulations shall be liberally construed to effectuate the purposes and provisions of the Architectural Barriers Act and section 502 of the Rehabilitation Act.

(d) The rules shall be applied to secure fairness in administration and elimination of unjustifiable expense and delay and to ascertain the truth.

(e) Words importing the singular number may extend and be applied to a plural and vice versa.

§ 1150.6 Suspension of rules.

Upon notice to all parties, the judge, with respect to matters pending before him/her, may modify or waive any rule in these regulations upon determination that no party will be unduly prejudiced and that the end of justice will be served.

Subpart B—Parties, Complainants, Participants

§ 1150.11 Parties.

(a) The term parties includes (1) any agency, state or local body, or other person named as a respondent in a notice of hearing or opportunity for hearing, (2) the Executive Director and (3) any person named as a party by order of the judge.

(b) The Executive Director has the sole authority to initiate proceedings by issuing a citation under § 1150.42, on the basis of (1) a complaint from any person or (2) alleged violations coming to his/her attention through any means.

§ 1150.12 Complainants.

(a) Any person may submit a complaint to the A&TBCB alleging that a building or facility does not comply with applicable standards issued under the Architectural Barriers Act. Complaints must be in writing and should be sent to: Executive Director, Architectural and Transportation Barriers Compliance Board, 1111 18th Street, Suite 501, Washington, DC 20036–3894.

A complaint form is available at the above address. Complaints may, but need not, contain (1) the complainant's name and where he/she may be reached, (2) the facility or building and, if known, the funding agency, and (3) a brief description of the barriers. A complaint form is available at the above address.

(b) The A&TBCB shall hold in confidence the identity of all persons submitting complaints unless the person submits a written authorization otherwise.

(c) The A&TBCB shall give or mail to the complainant a copy of these regulations.

(d) A complainant is not a party to the proceedings as a matter of course, but may petition the judge to participate under § 1150.13.

(e) The A&TBCB shall send the complainant a copy of the final order issued by the judge. The complainant has standing to obtain judicial review of that order.

[53 FR 39473, Oct. 7, 1988]

§ 1150.13 Participation on petition.

(a) By petitioning the judge, any person may be permitted to participate in the proceedings when he/she claims an interest in the proceedings and may contribute materially to their proper disposition. A complainant shall be permitted to participate in the proceeding when he/she petitions the judge.

(b) The judge may, in his/her discretion, determine the extent of participation of petitioners, including as an intervening party or participant. The judge may, in his/her discretion, limit participation to submitting documents and briefs, or permit the introduction of evidence and questioning of witnesses.

§ 1150.14 Appearance.

(a) A party may appear in person or by counsel or other representative and participate fully in any proceedings. An agency, state or local body, corporation or other association, may appear by any of its officers or by any employee it authorizes to appear on its behalf.

(b) A representative of a party or participant shall be deemed to control all matters respecting the interest of such party or participant in the proceedings.

(c) This section shall not be construed to require any representative to be an attorney-at-law.

(d) Withdrawal of appearance of any representative is effective when a written notice of withdrawal is filed and served on all parties and participants.

Subpart C—Form, Execution, Service and Filing of Documents for Proceedings on Citations

§ 1150.21 Form of documents to be filed.

Documents to be filed under the rules in this part shall be dated, the original signed in ink, shall show the docket number and title of the proceeding and shall show the title, if any, and address of the signatory. Copies need not be signed; however, the name of the person signing the original, but not necessarily his/her signature, shall be reproduced. Documents shall be legible and shall not be more than 8½ inches wide.

§ 1150.22 Signature of documents.

The signature of a party, authorized officer, employee or attorney constitutes a certification that he/she has read the document, that to the best of his/her knowledge, information, and belief there is a good ground to support it, and that it is not interposed for delay. If a document is not signed or is signed with intent to defeat the purpose of this section, it may be stricken as sham and false and the proceeding may proceed as though the document had not been filed.

§ 1150.23 Filing and service.

(a) *General*. All notices, written motions, requests, petitions, memoranda, pleadings, briefs, decisions, and correspondence to the judge, from a party or a participant or vice versa, relating to a proceeding after its commencement shall be filed and served on all parties and participants.

(b) *Filing*. Parties shall submit for filing the original and two copies of documents, exhibits, and transcripts of testimony. Filings shall be made in person or by mail, with the hearing clerk at the address stated in the notice of hearing or notice of opportunity for hearing, during regular business hours. Regular business hours are every Monday through Friday (Federal legal holidays excepted) from 9 a.m. to 5:30 p.m. Standard or Daylight Savings Time, whichever is effective in the city where the office of the judge is located at the time.

(c) *Service*. Service of one copy shall be made on each party and participant by personal delivery or by certified mail, return receipt requested, properly addressed with postage prepaid. When a party or participant has appeared by attorney or other representative, service upon the attorney or representative is deemed service upon the party or participant.

§ 1150.24 [Reserved]

§ 1150.25 Date of service.

The date of service shall be the day when the matter is deposited in United States mail or is delivered in person,

except that the date of service of the initial notice of hearing or opportunity for hearing shall be the date of its delivery, or the date that its attempted delivery is refused.

§ 1150.26 Certificate of service.

The original of every document filed and required to be served upon parties to a proceeding shall be endorsed with a certificate of service signed by the party making service or by his/her attorney or representative, stating that such service has been made, the date of service, and the manner of service, whether by mail or personal delivery.

Subpart D—Time

§ 1150.31 Computation.

In computing any period of time under these rules or in any order issued under them, the time begins with the day following the act, event, or default, and includes the last day of the period, unless it is a Saturday, Sunday, or Federal legal holiday, in which event it includes the next following business day. When the period of time prescribed or allowed is less than seven (7) days, intermediate Saturdays, Sundays, and Federal legal holidays shall be excluded from the computation.

§ 1150.32 Extension of time or postponement.

(a) Requests for extension of time shall be addressed to the judge and served on all parties and participants. Requests should set forth the reasons for the application.

(b) If made promptly, answers to requests for extension of time are permitted.

(c) The judge may grant the extension upon a showing of good cause by the applicant.

Subpart E—Proceedings Prior to Hearings; Pleadings and Motions

§ 1150.41 Informal resolution.

(a) The A&TBCB immediately shall send copies of complaints to all interested agencies and persons. In addition, the A&TBCB shall apprise any person who might become a party to compliance proceedings of the alleged instances of noncompliance and afford him/her a reasonable opportunity to respond or submit pertinent documents.

(b) The Executive Director or his/her designee shall seek the cooperation of persons and agencies in obtaining compliance and shall provide assistance and guidance to help them comply voluntarily.

(c) Upon request of the Executive Director, interested agencies or persons, including, but not limited to, occupant agencies, recipients of assistance, and lessors, shall submit to the Executive Director or his/her designee timely, complete, and accurate reports concerning the particular complaint. Reports shall be completed at such times, and in such form containing all information as the Executive Director or his/her designee may prescribe.

(d) The Executive Director, or his/her designee, shall have access during normal business hours to books, records, accounts and other sources of information and facilities as may be pertinent to ascertain compliance. Considerations of privacy or confidentiality asserted by an agency or person may not bar the Executive Director from evaluating such materials or seeking to enforce compliance. The Executive Director may seek a protective order authorizing the use of allegedly confidential materials on terms and conditions specified by the judge.

(e) Complaints should be resolved informally and expeditiously, by the interested persons or agencies. If compliance with the applicable standards is not achieved informally or an impasse concerning the allegations of compliance or noncompliance is reached, the Executive Director will review the matter, including previous attempts by agencies to resolve the complaint, and take actions including, but not limited to, surveying and investigating buildings, monitoring compliance programs of agencies, furnishing technical assistance, such as standard interpretation, to agencies, and obtaining assurances, certifications, and plans of action as may be necessary to ensure compliance.

(f) All actions to informally resolve complaints under paragraphs (a) through (e) of this section shall be completed within one hundred eighty

(180) days after receipt of the complaint by all affected agencies and persons. A complaint shall be deemed informally resolved if the person or agencies responsible for the alleged violation either:

(1) Demonstrates to the Executive Director that no violation has occurred, or

(2) Corrects the violation, or

(3) Agrees in writing to implement specific compliance action within a definite time agreed to by the Executive Director, or

(4) Are timely implementing a plan for compliance agreed to by the Executive Director.

No later than ten (10) days after the determination of the one hundred eighty (180) day period, the Executive Director shall either issue a citation under § 1150.42, or determine in writing that a citation will not be issued at that time and the reasons that it is considered unnecessary.

(g) A determination not to issue a citation shall be served in accordance with § 1150.23 on all interested agencies and persons upon whom a citation would have been served if it had been issued. Except as otherwise provided in paragraph (i) of this section, the failure of the Executive Director to take action within the ten (10) day period after termination of the one hundred eighty (180) day informal resolution period shall not preclude the Executive Director from taking action thereafter.

(h) Nothing in paragraphs (a) through (g) of this section shall be construed as precluding the Executive Director before the termination of the one hundred eighty (180) day informal resolution period from:

(1) Issuing a citation if it is reasonably clear that informal resolution cannot be achieved within that time, or

(2) Determining not to issue a citation if it is reasonably clear that compliance can be achieved or that issuance of a citation is not otherwise warranted.

(i) At any time after the expiration of one hundred ninety (190) days after receipt of the complaint by all affected agencies and persons, any person or agency receiving a copy of the complaint, or the complainant, may serve a written request on the Executive Director to issue a citation or determination not to proceed within thirty (30) days. If the Executive Director fails to serve a written response within thirty (30) days of receipt of such a request, the complaint shall be deemed closed.

[53 FR 39474, Oct. 7, 1988]

§ 1150.42 Citations.

(a) If there appears to be a failure or threatened failure to comply with a relevant standard, and the noncompliance or threatened noncompliance cannot be corrected or resolved by informal means under § 1150.41, the Executive Director on behalf of the A&TBCB may issue a written citation, requesting the ordering of relief necessary to ensure compliance with the standards or guidelines and requirements. The relief may include the suspension or withholding of funds and/or specific corrective action.

(b) The citation shall be served upon all interested parties, as appropriate, including but not limited to the complainant, the agency having custody, control, or use of the building or facility, and the agency funding by contract, grant, or loan, the allegedly noncomplying building or facility.

(c) The citation shall contain:

(1) A concise jurisdictional statement reciting the provisions of section 502 of the Rehabilitation Act and Architectural Barriers Act under which the requested action may be taken, (2) a short and plain basis for requesting the imposition of the sanctions, (3) a statement either that within fifteen (15) days a hearing date will be set or that the agency or affected parties may request a hearing within fifteen (15) days from service of the citation, and (4) a list of all pertinent documents necessary for the judge to make a decision on the alleged noncompliance, including but not limited to, contracts, invitations for bids, specifications, contract or grant drawings, and correspondence.

(d) The Executive Director shall file copies of all pertinent documents listed in the citation simultaneously with filing the citation.

§ 1150.43 Answers.

(a) Answers shall be filed by respondents within fifteen (15) days after receipt of a citation.

(b) The answer shall admit or deny specifically and in detail, matters set forth in each allegation of the citation. If the respondent is without knowledge, the answer shall so state and such statement shall be deemed a denial. Matters not specifically denied shall be deemed admitted. Failure to file a timely answer shall constitute an admission of all facts recited in the citation.

(c) Answers shall contain a list of additional pertinent documents not listed in the citation when respondent reasonably believes these documents are necessary for the judge to make a decision. Copies of the listed documents shall be filed with the answer.

(d) Answers may also contain a request for a hearing under § 1150.45.

§ 1150.44 Amendments.

(a) The Executive Director may amend the citation as a matter of course before an answer is filed. A respondent may amend its answer once as a matter of course, but not later than five (5) days after the filing of the original answer. Other amendments of the citation or the answer shall be made only by leave of judge.

(b) An amended citation shall be answered within five (5) days of its service, or within the time for filing an answer to the original citation, whichever is longer.

§ 1150.45 Request for hearing.

When a citation does not state that a hearing will be scheduled, the respondent, either in a separate paragraph of the answer, or in a separate document, may request a hearing. Failure of a respondent to request a hearing within fifteen (15) days from service of the citation shall be deemed a waiver of the right to a hearing and shall constitute consent to the making of a decision on the basis of available information.

§ 1150.46 Motions.

(a) Motions and petitions shall state the relief sought, the authority relied upon, and the facts alleged.

(b) If made before or after the hearing, these matters shall be in writing. If made at the hearing, they may be stated orally or the judge may require that they be reduced to writing and filed and served on all parties.

(c) Except as otherwise ordered by judge, responses to a written motion or petition shall be filed within ten (10) days after the motion or petition is served. An immediate oral response may be made to an oral motion. All oral arguments on motions will be at the discretion of the judge.

(d) A reply to a response may be filed within within five (5) days after the response is served. The reply shall address only the contents of the response.

§ 1150.47 Disposition of motions and petitions.

The judge may not sustain or grant a written motion or petition prior to expiration of the time for filing responses, but may overrule or deny such motion or petition without awaiting response, *Providing however,* That prehearing conferences, hearings, and decisions need not be delayed pending disposition of motions or petitions. All motions and petitions may be ruled upon immediately after reply. Motions and petitions not disposed of in separate rulings or in decisions will be deemed denied.

§ 1150.48 PER: Citation, answer, amendment.

(a) Unless otherwise specified, other relevant sections shall apply to PER proceedings.

(b) In addition to all other forms of relief requested, the citation shall request PER when it appears to the Executive Director that immediate and irreparable harm from noncompliance with the standard is occurring or is about to occur. Citations requesting PER shall recite specific facts and include the affidavit or the notarized complaint upon which the PER request is based. Citations requesting PER shall recite that a hearing regarding PER has been scheduled to take place eight (8) days after receipt of the citation. Citations requesting PER may be filed without prejudice to proceedings in which PER is not requested and

without prejudice to further proceedings if PER is denied. The time and place of hearing fixed in the citation shall be reasonable and shall be subject to change for cause.

(c) Answers to citations requesting PER shall be in the form of all answers, as set forth in § 1150.43, and must be filed within four (4) days after receipt of the citation. Answers shall recite in detail, by affidavit or by notarized answer, why the PER requested should not be granted.

(d) When a citation contains both a request for relief to ensure compliance with a standard and a request for PER, an answer to the PER request shall be filed in accordance with paragraph (c) of this section and an answer to a request for other relief shall be filed in accordance with § 1150.43.

(e) Citations and answers in PER proceedings may not be amended prior to hearing. Citations and answers in PER proceedings may be amended at the hearing with the permission of the judge.

Subpart F—Responsibilities and Duties of Judge

§ 1150.51 Who presides.

(a) A judge assigned to the case under section 3105 or 3344 of title 5 U.S.C. (formerly section 11 of the Administrative Procedure Act), shall preside over the taking of evidence in any hearing to which these rules of procedure apply.

(b) The A&TBCB shall, in writing, promptly notify all parties and participants of the assignment of the judge. This notice may fix the time and place of hearing.

(c) Pending his/her assignment, the responsibilities, duties, and authorities of the judge under these regulations shall be executed by the A&TBCB, through the Chair or another member of the A&TBCB designated by the Chair. A Board member shall not serve in this capacity in any proceeding relating to the member, his/her Federal agency, or organization of which he/she is otherwise interested.

[53 FR 39474, Oct. 7, 1988]

§ 1150.52 Authority of judge.

The judge shall have the duty to conduct a fair hearing, to take all necessary action to avoid delay, and maintain order. He/she shall have all powers necessary to effect these ends, including (but not limited to) the power to:

(a) Arrange and issue notice of the date, time, and place of hearings previously set.

(b) Hold conferences to settle, simplify, or fix the issues in proceedings, or to consider other matters that may aid in the expeditious disposition of the proceedings.

(c) Require parties and participants to state their position with respect to the various issues in the proceedings.

(d) Administer oaths and affirmations.

(e) Rule on motions, and other procedural items on matters pending before him/her.

(f) Regulate the course of the hearing and conduct of counsel.

(g) Examine witnesses and direct witnesses to testify.

(h) Receive, rule on, exclude or limit evidence.

(i) Fix time for filing motions, petitions, briefs, or other items in matters pending before him/her.

(j) Issue decisions.

(k) Take any action authorized by the rules in this part or the provisions of sections 551 through 559 of title 5 U.S.C. (the Administrative Procedure Act).

[45 FR 78474, Nov. 25, 1980. Redesignated at 53 FR 39474, Oct. 7, 1988]

§ 1150.53 Disqualification of judge.

(a) A judge shall disqualify himself/herself whenever in his/her opinion it is improper for him/her to preside at the proceedings.

(b) At any time following appointment of the judge and before the filing of the decision, any party may request the judge to withdraw on grounds of personal bias or prejudice either against it or in favor of any adverse party, by promptly filing with him/her an affidavit setting forth in detail the alleged grounds for disqualification.

(c) If, in the opinion of the judge, the affidavit referred to in paragraph (b) of this section is filed with due diligence

and is sufficient on its face, the judge shall promptly disqualify himself/herself.

(d) If the judge does not disqualify himself/herself, he/she shall so rule upon the record, stating the grounds for his/her ruling. Then, he/she shall proceed with the hearing, or, if the hearing has closed, he/she shall proceed with the issuance of the decision.

[45 FR 78474, Nov. 25, 1980. Redesignated at 53 FR 39474, Oct. 7, 1988]

Subpart G—Prehearing Conferences and Discovery

§ 1150.61 Prehearing conference.

(a) At any time before a hearing, the judge on his/her own motion or on motion of a party, may direct the parties or their representative to exchange information or to participate in a prehearing conference for the purpose of considering matters which tend to simplify the issues or expedite the proceedings.

(b) The judge may issue a prehearing order which includes the agreements reached by the parties. Such order shall be served upon all parties and participants and shall be a part of the record.

§ 1150.62 Exhibits.

(a) Proposed exhibits shall be exhanged at the prehearing conference, or otherwise prior to the hearing if the judge so requires. Proposed exhibits not so exchanged may be denied admission as evidence.

(b) The authenticity of all proposed exhibits will be deemed admitted unless written objection to them is filed prior to the hearing or unless good cause is shown at the hearing for failure to file such written objection.

§ 1150.63 Discovery.

(a) Parties are encouraged to engage in voluntary discovery procedures. For good cause shown under appropriate circumstances, but not as a matter of course, the judge may entertain motions for permission for discovery and issue orders including orders—(1) to submit testimony upon oral examination or written interrogatories before an officer authorized to administer oaths, (2) to permit service of written interrogatories upon the opposing party, (3) to produce and permit inspection of designated documents, and (4) to permit service upon the opposing parties of a request for the admission of specified facts.

(b) Motions for discovery shall be granted only to the extent and upon such terms as the judge in his/her discretion considers to be consistent with and essential to the objective of securing a just and inexpensive determination of the merits of the citation without unnecessary delay.

(c) In connection with any discovery procedure, the judge may make any order which justice requires to protect a party or person from annoyance, embarrassment, oppression or undue burden or expense, including limitations on the scope, method, time and place for discovery, and provisions for protecting the secrecy of confidential information or documents. If any party fails to comply with a discovery order of the judge, without an excuse or explanation satisfactory to the judge, the judge may decide the fact or issue relating to the material requested to be produced, or the subject matter of the probable testimony, in accordance with claims of the other party in interest or in accordance with the other evidence available to the judge, or make such other ruling as he/she determines just and proper.

Subpart H—Hearing Procedures

§ 1150.71 Briefs.

The judge may require parties and participants to file written statements of position before the hearing begins. The judge may also require the parties to submit trial briefs.

§ 1150.72 Purpose of hearing.

Hearings for the receipt of evidence will be held only in cases where issues of fact must be resolved. Where it appears from the citation, the answer, stipulations, or other documents in the record, that there are no matters of material fact in dispute, the judge may enter an order so finding, vacating the hearing date, if one has been set, and fixing the time for filing briefs.

§ 1150.73 Testimony.

(a) Formal rules of evidence shall not apply, but rules or principles designed to assure production of the most probative evidence available do apply. Testimony shall be given orally under oath or affirmation; but the judge, in his/her discretion, may require or permit the direct testimony of any witness to be prepared in writing and served on all parties in advance of the hearing. Such testimony may be adopted by the witness at the hearing and filed as part of the record.

(b) All witnesses shall be available for cross-examination and, at the discretion of the judge, may be cross-examined without regard to the scope of direct examination as to any matter which is relevant and material to the proceeding.

(c) When testimony is taken by deposition, an opportunity shall be given, with appropriate notice, for all parties to cross-examine the witness. Objections to any testimony or evidence presented shall be deemed waived unless raised at the time of the deposition.

(d) Witnesses appearing before the judge shall be paid the same fees and mileage that are paid witnesses in the courts of the United States. Witnesses whose depositions are taken and the persons taking the same shall be entitled to the same fees as are paid for like services in the courts of the United States. Witness fees and mileage shall be paid by the party requesting the witness to appear, and the person taking a deposition shall be paid by the party requesting the taking of the deposition.

§ 1150.74 Exclusion of evidence.

The judge may exclude evidence which is immaterial, irrelevant, unreliable, or unduly repetitious.

§ 1150.75 Objections.

Objections to evidence or testimony shall be timely and may briefly state the grounds.

§ 1150.76 Exceptions.

Exceptions to rulings of the judge are unnecessary. It is sufficient that a party at the time the ruling of the judge is sought, makes known the action which he/she desires the judge to take, or his/her objection to an action taken, and his/her grounds for it.

§ 1150.77 Official notice.

Where official notice is taken or is to be taken of a material fact not appearing in the evidence of record, any party on timely request, shall be afforded an opportunity to question the propriety of taking notice or to rebut the fact noticed.

§ 1150.78 Public documents.

When a party or paticipant offers, in whole or in part, a public document, such as an official report, decision, opinion, or published scientific or economic statistical data issued by any of the executive departments, or their subdivisions, legislative agencies or committees or administrative agencies of the Federal government (including government-owned corporations), or a similar document issued by a State or local government or their agencies, and such document (or part thereof) has been shown by the offeror to be reasonably available to the public, such document need not be produced or marked for identification, but may be offered for official notice, as a public document by specifying the document or its relevant part.

§ 1150.79 Offer of proof.

An offer of proof made in connection with an objection taken to a ruling of the judge rejecting or excluding proffered oral testimony shall consist of a statement of the substance of the evidence which counsel contends would be adduced by such testimony. If the excluded evidence consists of evidence in documentary or written form or refers to documents or records, a copy of the evidence shall be marked for identification and shall accompany the record as the offer of proof.

§ 1150.80 Affidavits.

An affidavit is not inadmissible as such. Unless the judge fixes other time periods, affidavits shall be filed and served on the parties not later than fifteen (15) days prior to the hearing. Not less than seven (7) days prior to hearing, a party may file and serve written objections to any affidavit on the

ground that he/she believes it necessary to test the truth of its assertions at hearing. In such event the assertions objected to will not be received in evidence unless the affiant is made available for cross-examination, or the judge determines that cross-examination is not necessary for the full and true disclosure of facts referred to in such assertions. Not withstanding any objection, however, affidavits may be considered in the case of any respondent who waives a hearing.

§ 1150.81 Consolidated or joint hearing.

In cases in which the same or related facts are asserted to constitute noncompliance with standards or guidelines and requirements, the judge may order all related cases consolidated and may make other orders concerning the proceedings as will be consistent with the objective of securing a just and inexpensive determination of the case without unnecessary delay.

§ 1150.82 PER proceedings.

(a) In proceedings in which a citation, or part of one, seeking PER has been filed, the judge shall make necessary rulings with respect to time for filing of pleadings, the conduct of the hearing, and to all other matters. He/she shall do all other things necessary to complete the proceeding in the minimum time consistent with the objective of securing an expeditious, just and inexpensive determination of the case. The times for actions set forth in these rules shall be followed unless otherwise ordered by the judge.

(b) The judge shall determine the terms and conditions for orders of PER. These orders must be consistent with preserving the rights of all parties so as to permit the timely processing of the citation, or part of it, not requesting PER, as well as consistent with the provisions and objectives of the Architectural Barriers Act and section 502 of the Rehabilitation Act. In issuing an order for PER, the judge shall make the following specific findings of fact and conclusions of law—

(1) The Executive Director is likely to succeed on the merits of the proceedings;

(2) The threatened injury or violation outweighs the threatened harm to the respondent if PER is granted; and

(3) Granting PER is in the public interest.

(c) The judge may dismiss any citation or part of a citation seeking PER when the judge finds that the timely processing of a citation not requesting PER will adequately ensure the objectives of section 502 of the Rehabilitation Act and that immediate and irreparable harm caused by noncompliance with the standards or guidelines and requirements is not occurring or about to occur.

Subpart I—The Record

§ 1150.91 Record for decision.

The transcript of testimony, exhibits and all papers, documents and requests filed in the proceeding, including briefs and proposed findings and conclusions, shall constitute the record for decision.

§ 1150.92 Official transcript.

The official transcripts of testimony, and any exhibits, briefs, or memoranda of law filed with them, shall be filed with the judge. Transcripts of testimony in hearings may be obtained from the official reporter by the parties and the public at rates not to exceed the maximum rates fixed by the contract between the A&TBCB and the reporter. Upon notice to all parties, the judge may authorize corrections to the transcript as are necessary to reflect accurately the testimony.

Subpart J—Posthearing Procedures; Decisions

§ 1150.101 Posthearing briefs; proposed findings.

The judge shall fix the terms, including time, for filing post-hearing statements of position or briefs, which may contain proposed findings of fact and conclusions of law. The judge may fix a reasonable time for such filing, but this period shall not exceed thirty (30) days from the receipt by the parties of the transcript of the hearing.

§ 1150.102 Decision.

(a) The judge shall issue a decision within thirty (30) days after the hearing ends or, when the parties submit posthearing briefs, within thirty (30) days after the filing of the briefs.

(b) The decision shall contain (1) all findings of fact and conclusions of law regarding all material issues of fact and law presented in the record, (2) the reasons for each finding of fact and conclusion of law, and (3) other provisions which effectuate the purposes of the Architectural Barriers Act and section 502 of the Rehabilitation Act. The decision may direct the parties to take specific action or may order the suspension or withholding of Federal funds.

(c) The decision shall be served on all parties and participants to the proceedings.

§ 1150.103 Posthearing briefs, decision.

(a) No briefs or posthearing statements of position shall be required in proceedings seeking PER unless specifically ordered by the judge.

(b) In proceedings seeking PER the decision may be given orally at the close of the hearing and shall be made in writing within three (3) days after the hearing.

§ 1150.104 Judicial review.

Any complainant or participant in a proceeding may obtain judicial review of a final order issued in a compliance proceeding.

§ 1150.105 Court enforcement.

The Executive Director, at the direction of the Board, shall bring a civil action in any appropriate United States district court to enforce, in whole or in part, any final compliance order. No member of the A&TBCB shall participate in any decision of the A&TBCB concerning a proceeding relating to the member, his/her Federal agency, or organization to which he/she is a member or in which he/she is otherwise interested.

Subpart K—Miscellaneous Provisions

§ 1150.111 Ex parte communications.

(a) No party, participant or other person having an interest in the case shall make or cause to be made an ex parte communication to the judge with respect to the case.

(b) A request for information directed to the judge which merely inquiries about the status of a proceeding without discussing issues or expressing points of view is not deemed an ex parte communication. Communications with respect to minor procedural matters or inquires or emergency requests for extensions of time are not deemed ex parte communications prohibited by paragraph (a) of this section. Where feasible, however, such communications should be by letter, with copies delivered to all parties. Ex parte communications between a party or participant and the Executive Director with respect to securing compliance are not prohibited.

(c) In the event an ex parte communication occurs, the judge shall issue orders and take action as fairness requires. A prohibited communication in writing received by the judge shall be made public by placing it in the correspondence file of the docket in the case and will not be considered as part of the record for decision. If the prohibited communication is received orally, a memorandum setting forth its substance shall be made and filed in the correspondence section of the docket in the case. A person referred to in this memorandum may file a comment for inclusion in the docket if he/she considers the memorandum to be incorrect.

§ 1150.112 Post-order proceedings.

(a) Any party adversely affected by the compliance order issued by a judge may make a motion to the judge to have such order vacated upon a showing that the building or facility complies with the order.

(b) Notice of motions and copies of all pleadings shall be served on all parties and participants to the original proceeding. Responses to the motion to vacate shall be filed within ten (10) days after receipt of the motion unless

the judge for good cause shown grants additional time to respond.

(c) Oral arguments on the motion may be ordered by the judge. The judge shall fix the terms of the argument so that they are consistent with the objective of securing a prompt, just, and inexpensive determination of the motion.

(d) Within ten (10) days after receipt of all answers to the motion, the judge shall issue his/her decision in accordance with § 1150.102 (b) and (c).

§ 1150.113 Amicable resolution.

(a) Amicable resolution is encouraged at any stage of proceedings where such resolution is consistent with the provisions and objectives of the Architectural Barriers Act and section 502 of the Rehabilitation Act.

(b) Agreements to amicably resolve pending proceedings shall be submitted by the parties and shall be accompanied by an appropriate proposed order.

(c) The Executive Director is authorized to resolve any proceeding on behalf of the A&TBCB unless otherwise specifically directed by the A&TBCB and afterwards may file appropriate stipulations or notice that the proceeding is discontinued.

§ 1150.114 Effect of partial invalidity.

If any section, subsection, paragraph, sentence, clause or phrase of these regulations is declared invalid for any reason, the remaining portions of these regulations that are severable from the invalid part shall remain in full force and effect. If a part of these regulations is invalid in one or more of its applications, the part shall remain in effect in all valid applications that are severable from the invalid applications.

PART 1151—BYLAWS

Sec.
1151.1 Establishment.
1151.2 Authority.
1151.3 Officers.
1151.4 Delegations.
1151.5 Board meetings.
1151.6 Committees.
1151.7 Amendments to the bylaws.

AUTHORITY: 29 U.S.C. 792.

SOURCE: 63 FR 1924, Jan. 13, 1998, unless otherwise noted.

§ 1151.1 Establishment.

The Architectural and Transportation Barriers Compliance Board was established pursuant to section 502 of the Rehabilitation Act of 1973, as amended. The agency is also known and often referred to as the ''Access Board'' or simply the ''Board.''

§ 1151.2 Authority.

The Board shall have the authority and responsibilities as set forth in section 502 of the Rehabilitation Act of 1973 (29 U.S.C. 792); section 504 of the Americans with Disabilities Act of 1990 (42 U.S.C. 12204); and section 225(e) of the Telecommunications Act of 1996 (47 U.S.C. 255(e)).

§ 1151.3 Officers.

(a) *Board*. The Board is the governing body of the agency.

(b) *Chair, Vice-Chair*. The head of the agency is the Chair of the Board and, in his or her absence or disqualification, the Vice-Chair of the Board. As head of the agency, the Chair represents the Board whenever an applicable Federal statute or regulation imposes a duty or grants a right or authority to the head of the agency and has the authority to act in all matters relating to the operation of the Board. The Chair may delegate any such duties and responsibilities by written delegation of authority. The Chair supervises the Executive Director and evaluates his or her performance and approves performance evaluations of employees who report directly to the Executive Director. The authority to supervise, evaluate and approve performance evaluations of the Executive Director and those employees who report directly to the Executive Director may only be delegated to the Vice-Chair of the Board.

(c) *Election, term*. The Chair and the Vice-Chair of the Board shall be elected by a majority of the membership of the Board (as fixed by statute) and serve for terms of one year. Elections shall be held as soon as possible upon completion of the one year term of the Chair and Vice-Chair. If no new Chair or Vice-Chair has been elected at the

end of the one-year term, the incumbents shall continue to serve in that capacity until a successor Chair or Vice-Chair has been elected. When the Chair is a public member, the Vice-Chair shall be a Federal member; and when the Chair is a Federal member, the Vice-Chair shall be a public member. Upon the expiration of the term as Chair of a Federal member, the subsequent Chair shall be a public member; and vice versa.

(d) *Executive Director*. The Executive Director is nominated by the Chair and confirmed by the Board. The Executive Director provides administrative leadership, and supervision and management of staff activities in carrying out the policies and decisions of the Board under the direction and supervision of the Chair. The Executive Director has the authority to execute contracts, agreements and other documents necessary for the operation of the Board; hire, fire and promote staff (including temporary or intermittent experts and consultants); procure space, equipment and supplies; and obtain interagency and commercial support services. The Executive Director directs compliance and enforcement activities in accordance with the procedures set forth in 36 CFR part 1150, including issuing citations and determinations not to proceed, conducting negotiations for compliance, entering into agreements for voluntary compliance and performing all other actions authorized by law pertaining to compliance and enforcement not otherwise reserved to the Board.

(e) *General Counsel*. The General Counsel is nominated by the Chair and confirmed by the Board. The General Counsel is responsible to the Board under the supervision of the Executive Director.

§ 1151.4 Delegations.

(a) *Executive Committee*. The Board may delegate to the Executive Committee authority to implement its decisions by a majority vote of the members present at a meeting and any proxies. To the extent permitted by law, the Board may delegate to the Executive Committee any other of its authorities by two-thirds vote of the members present at a meeting and any proxies. A separate delegation is necessary for each action the Board desires the Executive Committee to implement.

(b) *Other*. To the extent permitted by law, the Board may delegate other duties to its officers or committees by a vote of two-thirds of the members present at a meeting and any proxies.

(c) *Redelegation*. Unless expressly prohibited in the original delegation, an officer or committee may redelegate authority.

§ 1151.5 Board meetings.

(a) *Number*. The Chair shall schedule five regular meetings of the Board each year. In addition, the Board shall schedule one Board sponsored public event.

(b) *Timing*. Regular meetings of the Board and at least one Board sponsored event shall ordinarily be held on the Wednesday following the second Tuesday of every other month. The Chair may reschedule a regular meeting of the Board to another date, no more than one month earlier or later than the regularly scheduled date.

(c) *Agenda*. The Chair establishes the agenda for the meetings. Members or committees shall forward submissions for agenda items to the Chair. Except for items concerning the adoption, amendment or recision of the bylaws in this part, an item may be placed before the Board for consideration without the approval of the Chair upon a two-thirds vote of the members present at a Board meeting and any proxies to suspend the rules of order. Items concerning the adoption, amendment or recision of the bylaws in this part may be placed on a future Board agenda without the approval of the Chair upon a vote of two-thirds of the membership of the Board (as fixed by statute).

(d) *Notice*. The Chair shall provide a written notice of scheduled Board meetings, including the agenda and supporting materials for the meeting, to each Board member at least ten (10) work days prior to the meeting. The ten (10) days notice requirement may be waived upon a two-thirds vote by the members present at the Board meeting and any proxies to suspend the rules of order.

(e) *Cancellation*. The Chair may cancel a regular meeting of the Board by

giving written notice of the cancellation at least ten (10) work days prior to the meeting where practical.

(f) *Special meetings.* The Chair may call special meetings of the Board to deal with important matters arising between regular meetings which require action by the Board prior to the next regular meeting. Voting and discussion shall be limited to the subject matter which necessitated the call of the special meeting. All Board members shall receive reasonable advance notice of the time, place, and purpose of the special meeting.

(g) *Record.* The Executive Director shall maintain a permanent record of the minutes of the meeting and attendance. The Board shall approve the final minutes after all corrections and additions have been incorporated.

(h) *Rules for Board meetings.* Meetings of the Board shall be held in accordance with Robert's Rules of Order, except as otherwise prescribed in the bylaws in this part.

(i) *Quorum.* (1) A quorum shall be the majority of the membership of the Board (as fixed by statute). At least half of the members required for a quorum shall be public members.

(2) Proxies shall not be counted for purposes of establishing a quorum.

(3) If a quorum is not present, a meeting shall be held only for the purpose of discussion and no vote may be taken.

(j) *Voting.* (1) Only Board members may vote.

(2) Except as otherwise prescribed in the bylaws in this part, a majority vote of the members present and any proxies is necessary for action by the Board.

(3) The presiding officer shall have the same right to vote as any other member.

(4) Any member may give his or her directed or undirected proxy to any other Board member, present at the meeting. Proxies shall be given in writing and submitted to the Chair prior to or at the meeting. A directed proxy shall be voided as to a specific issue if the question on which the vote is eventually taken differs from the question to which the proxy is directed.

(5) The Board may act on items of business between meetings by notational voting. At the request of the Chair, the Executive Director shall send a written ballot to each Board member describing each item submitted for notational voting. If any Board member requests discussion on an item, the ballots shall not be counted and the Chair shall place the item on the next Board meeting agenda for discussion and voting.

(k) *Telecommunications.* A member of the Board shall be considered present at a meeting when he or she participates in person or by conference telephone or similar communication equipment which enables all persons participating in the meeting to communicate with each other.

§ 1151.6 Committees.

(a) *Executive Committee*—(1) *Establishment.* The Board shall have an Executive Committee to serve as a leadership and coordinating committee. The Executive Committee acts on behalf of the Board in between regularly scheduled Board meetings as necessary and as authorized by delegation of the Board. In addition, the Executive Committee has the following duties and responsibilities:

(i) To review and consider recommendations and proposals from the various subject matter committees;

(ii) To review and make recommendations to the Board to amend or approve the Board's bylaws; and

(iii) To request and review all committee charters.

(2) *Chair.* The Vice-Chair of the Board shall serve as Chair of the Executive Committee.

(3) *Membership.* The Executive Committee shall be composed of a minimum of six members, three Federal and three public members, which shall include the Chair and the Vice-Chair of the Board, the chairs of each of the subject matter committees, and two at large members. The two at large members shall balance the number of Federal and public members and shall be elected by the Board after the election of the Chair and Vice-Chair of the Board and the chairs of the subject matter committees. In the event that the Board should establish three or

more subject matter committees, additional at-large members shall be elected as necessary to balance the Federal and public membership of the committee.

(4) *Quorum.* A quorum in the Executive Committee shall be a majority of the membership, present at the meeting. In the absence of their Federal member, the liaison may count toward a quorum. If a quorum is not present, a meeting can be held only for the purpose of discussion and no vote may be taken.

(5) *Voting.* (i) The presiding officer shall have the same right to vote as any other member.

(ii) On matters subject to Board review, liaisons are permitted to vote in the absence of their Federal member. A majority vote of the members (or liaisons) present at the meeting and any directed or undirected proxies is necessary for action by the committee.

(iii) On matters of final action, not subject to Board review, a majority vote of the membership of the committee, present at the meeting or by directed proxy, is necessary for action by the committee. In the absence of their Federal member, liaisons are permitted to cast a directed proxy only.

(b) *Subject matter committees*—(1) *Establishment.* The Board may establish or dissolve subject matter committees by a two-thirds vote of the members present and any proxies.

(2) (*2*) *Chair, Vice-Chair.* The Chair and Vice-Chair of a subject matter committee shall be elected by the Board after the election of the Chair and Vice-Chair of the Board. The Chair of a subject matter committee shall serve as a member of the Board's Executive Committee.

(3) *Membership.* Each subject matter committee shall be comprised of a minimum of seven, and a maximum of nine, members. Except for the Chair of the committee who is elected by the Board, the members of the committee shall be appointed by the Chair of the Board. Members shall serve a term of one year corresponding to that of the Chair of the Board, and continue their duties until their successors have been appointed.

(4) *Quorum.* A quorum shall be a majority of the actual membership of the committee. A liaison may represent the Federal member for purposes of a quorum. If a quorum is not present, a meeting shall be held only for the purpose of discussion and no vote may be taken.

(5) *Voting.* Directed or undirected proxies are permitted. In the absence of their Federal member, liaisons are permitted to vote on all matters which are subject to review by the full Board. The presiding officer shall have the same right to vote as any other member. A majority vote of the members (or liaisons) present at the meeting and any directed or undirected proxies is necessary for action by the committee.

(c) *Special committees.* The Chair, the Board, the Executive Committee or a subject matter committee may appoint a special committee to carry out a specific task. A special committee shall dissolve upon completion of its task or when dissolved by its creator. A special committee shall be governed by the same rules and procedures applicable to subject matter committees unless other rules or procedures are approved by the creator of the committee.

(d) *Telecommunications.* A member of a committee shall be considered present at a meeting when he or she participates in person or by conference telephone or similar communication equipment which enables all persons participating in the meeting to communicate with each other.

(e) *Charter.* With the exception of a Committee of the Whole, each committee shall establish a charter and may establish any additional procedures provided that they do not conflict with the provisions of the bylaws in this part.

(f) *Procedure.* Committee meetings shall be held in accordance with Robert's Rules of Order, except as otherwise prescribed in the bylaws in this part or committee charters.

(g) *Records.* Committees shall maintain written records of the meetings.

[63 FR 1924, Jan. 13, 1998, as amended at 71 FR 33254, June 8, 2006]

§ 1151.7 Amendments to the bylaws.

In order to amend the bylaws in this part, a vote of two-thirds of the membership of the Board (as fixed by statute) at the time the vote is taken shall

be required. The Board shall not suspend the rules in taking any action concerning adoption, amendment or recision of the bylaws in this part except that by vote of two-thirds of the membership of the Board (as fixed by statute), an item concerning the adoption, amendment or recision of the bylaws in this part may be placed on an agenda for Board consideration at a future meeting.

PART 1154—ENFORCEMENT OF NONDISCRIMINATION ON THE BASIS OF HANDICAP IN PROGRAMS OR ACTIVITIES CONDUCTED BY THE ARCHITECTURAL AND TRANSPORTATION BARRIERS COMPLIANCE BOARD

Sec.

1154.101 Purpose.
1154.102 Application.
1154.103 Definitions.
1154.104–1154.109 [Reserved]
1154.110 Self-evaluation.
1154.111 Notice.
1154.112–1154.129 [Reserved]
1154.130 General prohibitions against discrimination.
1154.131–1154.139 [Reserved]
1154.140 Employment.
1154.141–1154.148 [Reserved]
1154.149 Program accessibility: Discrimination prohibited.
1154.150 Program accessibility: Existing facilities.
1154.151 Program accessibility: New construction and alterations.
1154.152–1154.159 [Reserved]
1154.160 Communications.
1154.161–1154.169 [Reserved]
1154.170 Compliance procedures.

AUTHORITY: 29 U.S.C. 794.

SOURCE: 52 FR 16380, May 5, 1987, unless otherwise noted.

§ 1154.101 Purpose.

The purpose of this part is to effectuate section 119 of the Rehabilitation, Comprehensive Service, and Developmental Disabilities Amendments of 1978, which amended section 504 of the Rehabilitation Act of 1973 to prohibit discrimination on the basis of handicap in programs or activities conducted by Executive agencies or the United States Postal Service.

§ 1154.102 Application.

This part applies to all programs or activities conducted by the agency.

§ 1154.103 Definitions.

For purposes of this part, the term—

Agency means the Architectural and Transportation Barriers Compliance Board.

Assistant Attorney General means the Assistant Attorney General, Civil Rights Division, United States Department of Justice.

Auxiliary aids means service or devices that enable persons with impaired sensory, manual, and/or speaking skills to have an equal opportunity to participate in, and enjoy the benefits of, programs or activities conducted by the agency. For example, auxiliary aids useful for persons with impaired vision include readers, Brailled materials, audio recordings, telecommunications devices and other similar services and devices. Auxiliary aids useful for persons with impaired hearing include telephones handset amplifiers, telephone compatible with hearing aids, telecommunication devices for deaf persons (TDD's), interpreters, notetakers, written materials, and other similar services and devices.

Complete complaint means a written statement that contains the complainant's name and address and describes the agency's alleged discriminatory action in sufficient detail to inform the agency of the nature and date of the alleged violation of section 504. It shall be signed by the complainant or by someone authorized to do so on his or her behalf. Complaints filed on behalf of classes or third parties shall describe or identify (by name, if possible) the alleged victims of discriminations.

Facility means all or any portion of buildings, structures, equipment, roads, walks, parking lots, rolling stock or other conveyances, or other real or personal property.

Handicapped person means any person who has a physical or mental impairment that substantially limits one or more major life activities, has a record of such an impairment, or is regarded as having such an impairment.

As used in this definition, the phrase:

(1) *Physical or mental impairment* includes—

(i) Any physiological disorder or condition, cosmetic disfigurement, or anatomical loss affecting one or more of the following body systems: neurological; musculoskeletal; special sense organs; respiratory, including speech organs; cardiovascular; reproductive; digestive; genitourinary; hemic and lymphatic; skin; and endocrine; or

(ii) Any mental or psychological disorder, such as mental retardation, organic brain syndrome, emotional or mental illness, and specific learning disabilities. The term *physical or mental impairment* includes, but is not limited to, such diseases and conditions as orthopedic, visual, speech, and hearing impairments, cerebral palsy, epilepsy, muscular dystrophy, multiple sclerosis, cancer, heart disease, diabetes, mental retardation, emotional illness, and drug addiction and alcoholism.

(2) *Major life activities* includes functions such as caring for one's self, performing manual tasks, walking, seeing, hearing, speaking breathing, learning, and working.

(3) *Has a record of such an impairment* means has a history of, or has been misclassified as having, a mental or physical impairment that substantially limits one or more major life activities.

(4) *Is regarded as having an impairment* means—

(i) Has a physical or mental impairment that does not substantially limit major life activities but is treated by the agency as constituting such a limitation;

(ii) Has a physical or mental impairment that substantially limits major life activities only as a result of the attitudes of others toward such impairment; or

(iii) Has none of the impairments defined in subparagraph (1) of this definition but is treated by the agency as having such an impairment.

Qualified handicapped person means—

(1) With respect to any agency program or activity under which a person is required to perform services or to achieve a level of accomplishment, a handicapped person who meets the essential eligibility requirements and who can achieve the purpose of the program or activity without modifications in the program or activity that the agency can demonstrate would result in a fundamantal alteration in its nature; and

(2) With respect to any other program or activity, a handicapped person who meets the essential eligibility requirements for participation in, or receipt of benefits from, that program or activity.

(3) Qualified Handicapped Person is defined for purposes of employment in 29 CFR 1613.702(f) which is made applicable to this part by § 1154.140.

Section 504 means section 504 of the Rehabilitation Act of 1973 (Pub. L. 93–112, 87 Stat. 394 (29 U.S.C. 794)), as amended by the Rehabilitation Act Amendments of 1974 (Pub. L. 93–516, 88 Stat. 1617), and the Rehabilitation, Comprehensive Services, and Developmental Disabilities Amendments of 1978 (Pub. L. 95–602, 92 Stat. 2955). As used in this part, section 504 applies only to programs or activities conducted by Executive agencies and not to federally assisted programs.

§§ 1154.104–1154.109 [Reserved]

§ 1154.110 Self-evaluation.

(a) By July 6, 1988, the agency shall evaluate its current policies and practices, and the effects thereof, that do not or may not meet the requirements of this part, and, to the extent modification of any such policies and practices is required, the agency shall proceed to make the necessary modifications.

(b) The agency shall provide an opportunity to interested persons, including handicapped persons or organizations representing handicapped persons, to participate in the self-evaluation process by submitting comments (both oral and written).

(c) The agency shall, for all least three years following completion of the evaluation required under paragraph (a) of this section, maintain on file and make available for public inspection—

(1) A description of areas examined and any problems identified; and

(2) A description of any modifications made.

§ 1154.111 Notice.

The agency shall make available to employees, applicants, participants,

beneficiaries, and other interested persons such information regarding the provisions of this part and its applicability to the programs or activities conducted by the agency, and made such information available to them in such manner as the agency head finds necessary to apprise effectively such persons of the protections against discrimination assured them by section 504 and this regulation.

§§ 1154.112–1154.129 [Reserved]

§ 1154.130 General prohibitions against discrimination.

(a) No qualified handicapped person shall, on the basis of handicap, be excluded from participation in, be denied the benefits of, or otherwise be subjected to discrimination under any program or activity conducted by the agency.

(b)(1) The agency, in providing any aid, benefit, or service, may not, directly or through contractual, licensing, or other arrangements, on the basis of handicap—

(i) Deny a qualified handicapped person the opportunity to participate in or benefit from the aid, benefit, or service;

(ii) Afford a qualified handicapped person an opportunity to participate in or benefit from the aid, benefit, or service that is not equal to that afforded others;

(iii) Provide a qualified handicapped person with an aid, benefit, or service that is not as effective in affording equal opportunity to obtain the same result, to gain the same benefit, or to reach the same level of achievement as that provided to others;

(iv) Provide different or separate aid, benefits, or servcies to handicapped persons or to any class of handicapped persons than is provided to others unless such action is necessary to provide qualified handicapped persons with aid, benefits, or services that are as effective as those provided to others;

(v) Deny a qualified handicapped person the opportunity to participate as a member of planning or advisory boards; or

(vi) Otherwise limit a qualified handicapped person in the enjoyment of any right, privilege, advantage, or opportunity enjoyed by others receiving the aid, benefit, or service.

(2) The agency may not deny a qualified handicapped person the opportunity to participate in programs or activities that are not separate or different, despite the existence of permissibly separate of different programs or activities.

(3) The agency may not, directly or through contractual or other arrangements, utilize criteria or methods of administration the purpose or effect of which would—

(i) Subject qualified handicapped persons to discrimination on the basis of handicap; or

(ii) Defeat or substantially impair accomplishment of the objectives of a program or activity with respect to handicapped persons.

(4) The agency may not, in determining the site or location of a facility, make selections the purpose or effect of which would—

(i) Exclude handicapped persons from, deny them the benefits of, or otherwise subject them to discrimination under any program or activity conducted by the agency; or

(ii) Defeat or substantially impair the accomplishment of the objectives of a program or activity with respect to handicapped persons.

(5) The agency, in the selection of procurement contractors, may not use criteria that subject qualified handicapped persons to discrimination on the basis of handicap.

(c) The exclusion of nonhandicapped persons from the benefits of a program limited by Federal statute or Executive order to handicapped persons or the exclusion of a specific class of handicapped persons from a program limited by Federal statute or Executive order to a different class of handicapped persons is not prohibited by this part.

(d) The agency shall administer programs and activities in the most integrated setting appropriate to the needs of qualified handicapped persons.

§§ 1154.131–1154.139 [Reserved]

§ 1154.140 Employment.

No qualified handicapped person shall, on the basis of handicap, be subjected to discrimination in employment under any program or activity conducted by the agency. The definitions, requirements, and procedures of section 501 of the Rehabilitation Act of 1973 (29 U.S.C. 791), as established by the Equal Employment Opportunity Commission in 29 CFR part 1613, shall apply to employment in federally-conducted programs or activities.

§§ 1154.141–1154.148 [Reserved]

§ 1154.149 Program accessibility: Discrimination prohibited.

Except as otherwise provided in § 1154.150, no qualified handicapped person shall, because the agency's facilities are inaccessible to or unusable by handicapped persons, be denied the benefits of, be excluded from participation in, or otherwise be subjected to discrimination under any program or activity conducted by the agency.

§ 1154.150 Program accessibility: Existing facilities.

(a) *General.* The agency shall operate each program or activity so that the program or activity, when viewed in its entirety, is readily accessible to and usable by handicapped persons. This paragraph does not—

(1) Necessarily require the agency to make each of its existing facilities accessible to and usable by handicapped persons; or

(2) Require the agency to take any action that it can demonstrate would result in a fundamental alteration in the nature of a program or activity or in undue financial and administrative burdens. In those circumstances where agency personnel believe that the proposed action would fundamentally alter the program or activity or would result in undue financial and administrative burdens, the agency has the burden of proving that compliance with § 1154.150(a) would result in such alteration or burdens. The decision that compliance would result in such alteration or burdens must be made by the agency head or his/her designee after considering all agency resources available for use in the funding and operation of the conducted program or activity, and must be accompanied by a written statement of the reasons for reaching that conclusion. If an action would result in such an alteration or such burdens, the agency shall take any other action that would not result in such an alteration or such burdens but would nevertheless ensure that handicapped persons receive the benefits and services of the program or activity.

(b) *Methods.* The agency may comply with the requirements of this section through such means as redesign of equipment, reassignment of services to accessible buildings, assignment of aides to beneficiaries, home visits, delivery of services at alternate accessible sites, alteration of existing facilities and construction of new facilities, use of accessible rolling stock, or any other methods that result in making its programs or activities readily accessible to and usable by handicapped persons. The agency is not required to make structural changes in existing facilities where other methods are effective in achieving compliance with this section. The agency, in making alterations to existing buildings, shall meet accessibility requirements to the extent compelled by the Architectural Barriers Act of 1968, as amended (42 U.S.C. 4151–4157), and any regulations implementing it. In choosing among available methods for meeting the requirements of this section, the agency shall give priority to those methods that offer programs and activities to qualfied handicapped persons in the most integrated setting appropriate.

(c) *Time period for compliance.* The agency shall comply with the obligations established under this section by September 4, 1987 except that where structural changes in facilities are undertaken, such changes shall be made by July 6, 1990, but in any event as expeditiously as possible.

(d) *Transition plan.* In the event that structural changes to facilities will be undertaken to achieve program accessibility, the agency shall develop by January 6, 1988, a transition plan setting forth the steps necessary to complete such changes. The agency shall

provide an opportunity to interested persons, including handicapped persons or organizations representing handicapped persons, to participate in the development of the transition plan by submitting comments (both oral and written). A copy of the transition plan shall be made available for public inspection. The plan shall, at a minimum—

(1) Identify physical obstacles in the agency's facilities that limit the accessibility of its programs or activities to handicapped persons;

(2) Describe in detail the methods that will be used to make the facilities accessible;

(3) Specify the schedule for taking the steps necessary to achieve compliance with this section and, if the time period of the transition plan is longer than one year, identify steps that will be taken during each year of the transition period; and

(4) Indicate the official responsible for implementatin of the plan.

§ 1154.151 Program accessibility: New construction and alterations.

Each building or part of a building that is constructed or altered by, on behalf of, or for the use of the agency shall be designed, constructed, or altered so as to be readily accessible to and usable by handicapped persons. The definitions, requirements and standards of the Architectural Barriers Act (42 U.S.C. 4151–4157), as established in 41 CFR 101–19.600 to 101–19.607, apply to buildings covered by this section.

§§ 1154.152–1154.159 [Reserved]

§ 1154.160 Communications.

(a) The agency shall take appropriate steps to ensure effective communication with applicants, participants, personnel of other Federal entities, and members of the public.

(1) The agency shall furnish appropriate auxiliary aids where necessary to afford a handicapped person an equal opportunity to participate in, and enjoy the benefits of, the program or activity conducted by the agency.

(i) In determining what type of auxiliary aid is necessary, the agency shall give primary consideration to the requests of the handicapped person.

(ii) The agency need not provide individually prescribed devices, readers for personal use or study, or other devices of a personal nature.

(2) Where the agency communicates with applicants, beneficiaries, and members of the public by telephone, telecommunications devices for deaf persons (TDD's) or equally effective telecommunication systems shall be used.

(b) The agency shall ensure that interested person, including persons with impaired vision, speech or hearing, can obtain information as to the existence and location of accessible services, activities, and facilities.

(c) The agency shall provide signage at a primary entrance to each of its inaccessible facilities, directing users to a location at which they can obtain information about accessible facilities. The international symbol for accessibility shall be used at each primary entrance of an accessible facility.

(d) This section does not require the agency to take any action that it can demonstrate would result in a fundamental alteration in the nature of a program or activity or in undue financial and administrative burdens.

In those circumstances where agency personnel believe that the proposed action would fundamentally alter the program or activity or would result in undue financial and administrative burdens, the agency has the burden of proving that compliance with § 1154.160 would result in such alteration or burdens. The decision that compliance would result in such alteration or burdens must be made by the agency head or his/her designee after considering all agency resources available for use in the funding and operation of the conducted program or activity, and must be accompanied by a written statement of the reasons for reaching that conclusion. If an action required to comply with this section would result in such an alteration or such burdens, the agency shall take any other action that would not result in such an alteration or such burdens but would nevertheless ensure that, to the maximum extent possible, handicapped persons

receive the benefits and services of the program or activity.

[52 FR 16380, May 5, 1987, as amended at 53 FR 24265, June 28, 1988]

§§ 1154.161–1154.169 [Reserved]

§ 1154.170 Compliance procedures.

(a) Except as provided in paragraph (b) of this section, this section applies to all allegations of discrimination on the basis of handicap in programs or activities conducted by the agency.

(b) The agency shall process complaints alleging violations of section 504 with respect to employment according to the procedures established by the Equal Employment Opportunity Commission in 29 CFR part 1613 pursuant to section 501 of the Rehabilitation Act of 1973 (29 U.S.C. 791).

(c) Responsiblity for implementation and operation of this section shall be vested in the Equal Employment Opportunity Director.

(d) Complaints may be delivered or mailed to the Equal Employment Opportunity Director, ATBCB, 330 C Street, SW., Rm. 1010, Washington, DC 20202.

(e) The agency shall accept and investigate all complete complaints over which it has jurisdiction. All complete complaints must be filed within 180 days of the alleged act of discrimination. The agency may extend this time period for good cause.

(f) If the Equal Employment Opportunity Director receives a complaint that is not complete, he or she shall notify the complainant, within 30 days of receipt of the incomplete complaint, that additional information is needed. If the complainant fails to complete the complaint within 30 days of receipt of this notice, the Equal Employment Opportunity Director shall dismiss the complaint without prejudice, and shall notify the complainant of such dismissal.

(g) If the agency receives a complaint over which it does not have jurisdiction, it shall promptly notify the complainant and shall make reasonable efforts to refer the complaint to the appropriate government entity.

(h) The agency shall notify the Director of the Compliance and Enforcement Division of any complaint alleging that a building or facility is not readily accessible to and usable by handicapped persons. The Director of the Compliance and Enforcement Division shall determine whether or not the building or facility is subject to the Architectural Barriers Act of 1968, as amended (42 U.S.C. 4151–4157), or section 502 of the Rehabilitation Act of 1973, as amended (29 U.S.C. 792).

(i) Within 180 days of the receipt of a complete complaint over which it has jurisdiction, the agency shall notify the complainant of the results of the investigation in a letter containing—

(1) Findings of fact and conclusions of law;

(2) A description of a remedy for each violation found; and

(3) A notice of the right to appeal.

(j) Appeals of the findings of fact and conclusions of law or remedies must be filed by the complainant within 90 days of receipt from the agency of the letter required by §1154.170(g). The agency may extend this time for good cause.

(k) Timely appeals shall be accepted and processed by the head of the agency.

(l) The head of the agency shall notify the complainant of the results of the appeal within 60 days of the receipt of the request. If the head of the agency determines that additional information is needed from the complainant, he/she shall have 60 days from the date of receipt of the additional information to make his/her determination on the appeal.

(m) The time limits cited in paragraphs (i) and (l) of this section may be extended with the permission of the Assistant Attorney General.

(n) The agency may delegate its authority for conducting complaint investigations to other Federal agencies, except that the authority for making the final determination may not be delegated to another agency.

PART 1191—AMERICANS WITH DISABILITIES ACT (ADA) ACCESSIBILITY GUIDELINES FOR BUILDINGS AND FACILITIES; ARCHITECTURAL BARRIERS ACT (ABA) ACCESSIBILITY GUIDELINES

Sec.
1191.1 Accessibility guidelines.

APPENDIX A TO PART 1191—TABLE OF CONTENTS
APPENDIX B TO PART 1191—AMERICANS WITH DISABILITIES ACT: SCOPING
APPENDIX C TO PART 1191—ARCHITECTURAL BARRIERS ACT: SCOPING
APPENDIX D TO PART 1191—TECHNICAL
APPENDIX E TO PART 1191 [RESERVED]
APPENDIX F TO PART 1191—MODIFICATIONS ADOPTED BY THE DEPARTMENT OF TRANSPORTATION

AUTHORITY: 29 U.S.C. 792(b)(3); 42 U.S.C. 12204.

SOURCE: 69 FR 44151, July 23, 2004, unless otherwise noted.

§ 1191.1 Accessibility guidelines.

(a) The accessibility guidelines for buildings and facilities covered by the Americans with Disabilities Act are set forth in Appendices B and D to this part. The guidelines serve as the basis for accessibility standards adopted by the Department of Justice and the Department of Transportation under the Americans with Disabilities Act.

NOTE 1 TO PARAGRAPH (A): 1. Advisory sections and figures that illustrate the technical requirements in Appendix D are available on the Internet at: *www.access-board.gov*. The advisory sections provide guidance only and do not contain mandatory requirements.

NOTE 2 TO PARAGRAPH (A): 2. The Department of Justice adopted the 2010 ADA Standards for Accessible Design (2010 Standards) as the regulatory standards for the new construction and alteration of facilities subject to its regulations under the Americans with Disabilities Act (ADA), effective March 15, 2012. 28 CFR 35.151(c)(3), as amended at 75 FR 56163, September 15, 2010; and 28 CFR 36.406(a)(3), as amended at 75 FR 56236, September 15, 2010. For state and local governments, the 2010 Standards consist of the regulations at 28 CFR 35.151 and the versions of Appendices B and D to this part published in the 2009 edition of the Code of Federal Regulations. 28 CFR 35.104. For public accommodations and commercial facilities, the 2010 Standards consist of the regulations at 28 CFR part 36, subpart D and the versions of Appendices B and D to this part published in the 2009 edition of the Code of Federal Regulations. 28 CFR 36.104. Because Appendices B and D to this part, as published in the 2009 edition of the Code of Federal Regulations, were adopted by reference by the Department of Justice as part of the 2010 Standards for new construction and alteration of facilities subject to its ADA regulations, subsequent revisions to Appendices B and D by the Access Board are not included in the 2010 Standards and have no legal effect for facilities subject to its ADA regulations until adopted by the Department of Justice. Therefore, the public is cautioned not to use Appendices B and D to this part published in any edition of the Code of Federal Regulations after 2013, until such time as the later edition is adopted by the Department of Justice as a regulatory standard. Complete copies of the 2010 Standards can be obtained from the Department of Justice's ADA Web site at: *http://www.ada.gov/2010ADAstandards_index.htm*, or by contacting the DOJ Information Line, at: 800–514–0301 (Voice) or 800–514–0383 (TTY).

NOTE 3 TO PARAGRAPH (a): 1. The Department of Transportation has adopted by reference Appendices B and D to this part with modifications as the regulatory standards for the construction and alteration of transportation facilities subject to its regulations under the Americans with Disabilities Act, effective November 29, 2006. 49 CFR 37.9 and Appendix A to 49 CFR part 37, as amended at 71 FR 63263, October 30, 2006; and corrected at 72 FR 11089, March 12, 2007. The Department of Transportation has modified section 206.3 in Appendix B to this part; and sections 406, 810.2.2, and 810.5.3 in Appendix D to this part. The modified sections adopted by the Department of Transportation are reprinted in Appendix F to this part. Entities that are required to comply with the Department of Transportation's regulatory standards, must comply with the modified sections adopted by the Department of Transportation that are reprinted in Appendix F to this part.

(b) The accessibility guidelines for buildings and facilities covered by the Architectural Barriers Act are set forth in Appendices C and D to this part. The guidelines serve as the basis for accessibility standards adopted by the General Services Administration, the Department of Defense, the Department of Housing and Urban Development, and the United States Postal Service under the Architectural Barriers Act.

NOTE 1 TO PARAGRAPH (B): 1. Advisory sections and figures that illustrate the technical requirements in Appendix D are available on the Internet at: *www.access-board.gov*. The advisory sections provide guidance only and do not contain mandatory requirements.

NOTE 2 TO PARAGRAPH (b): 1. The General Services Administration has adopted by reference Appendices C and D to this part as the regulatory standards for buildings and facilities subject to its regulations under the Architectural Barriers Act. 41 CFR 102–76.65, as added at 70 FR 67786, November 8, 2005; amended at 71 FR 52498, September 6, 2006;

and further amended at 72 FR 5942, February 8, 2007. The General Services Administration refers to its regulatory standards as the Architectural Barriers Act Accessibility Standard (ABAAS). ABAAS applies to the construction and alteration of facilities commenced after May 8, 2006; to leases awarded for lease construction buildings on or after June 30, 2006; and to all other leases awarded pursuant to solicitations issued after February 6, 2007. Section 3.5 of the Facilities Standards for the Public Building Service PBS—P100 (March 2005) [available on the Internet at: *http://www.gsa.gov/P100*] establishes an additional requirement for General Services Administration owned buildings and lease construction with government option to purchase buildings to provide at least one automatic or power-assisted door complying with section 404.3 of ABAAS at each new or altered accessible entrance required by section F206.4.1 of ABAAS.

NOTE 3 TO PARAGRAPH (b): 2. The United States Postal Service has adopted by reference Appendices C and D to this part, with the exception of the advisory notes, as the regulatory standards for its postal facilities subject to the Architectural Barriers Act, effective October 1, 2005. 39 CFR 254.1, as added at 70 FR 28213, May 17, 2005.

NOTE 4 TO PARAGRAPH (B): 4. The Department of Defense adopted by reference Appendices B and D to this part as accessibility standards for the new construction and alteration of its facilities subject to the Architectural Barriers Act, effective October 31, 2008. Deputy Secretary of Defense Memorandum dated October 31, 2008, Access for People with Disabilities [available on the Internet at: *http://www.access-board.gov/guidelines-and-standards/buildings-and-sites/about-the-aba-standards/background/dod-memorandum*].

[69 FR 44151, July 23, 2004, as amended at 72 FR 13707, Mar. 23, 2007; 78 FR 59493, Sept. 26, 2013]

APPENDIX A TO PART 1191—TABLE OF CONTENTS

ADA CHAPTER 1: APPLICATION AND ADMINISTRATION

101 Purpose
102 Dimensions for Adults and Children
103 Equivalent Facilitation
104 Conventions
105 Referenced Standards
106 Definitions

ADA CHAPTER 2: SCOPING REQUIREMENTS

201 Application
202 Existing Buildings and Facilities
203 General Exceptions
204 Protruding Objects
205 Operable Parts
206 Accessible Routes
207 Accessible Means of Egress
208 Parking Spaces
209 Passenger Loading Zones and Bus Stops
210 Stairways
211 Drinking Fountains
212 Kitchens, Kitchenettes, and Sinks
213 Toilet Facilities and Bathing Facilities
214 Washing Machines and Clothes Dryers
215 Fire Alarm Systems
216 Signs
217 Telephones
218 Transportation Facilities
219 Assistive Listening Systems
220 Automatic Teller Machines and Fare Machines
221 Assembly Areas
222 Dressing, Fitting, and Locker Rooms
223 Medical Care and Long-Term Care Facilities
224 Transient Lodging Guest Rooms
225 Storage
226 Dining Surfaces and Work Surfaces
227 Sales and Service
228 Depositories, Vending Machines, Change Machines, Mail Boxes, and Fuel Dispensers
229 Windows
230 Two-Way Communication Systems
231 Judicial Facilities
232 Detention Facilities and Correctional Facilities
233 Residential Facilities
234 Amusement Rides
235 Recreational Boating Facilities
236 Exercise Machines and Equipment
237 Fishing Piers and Platforms
238 Golf Facilities
239 Miniature Golf Facilities
240 Play Areas
241 Saunas and Steam Rooms
242 Swimming Pools, Wading Pools, and Spas
243 Shooting Facilities with Firing Positions

ABA CHAPTER 1: APPLICATION AND ADMINISTRATION

F101 Purpose
F102 Dimensions for Adults and Children
F103 Modifications and Waivers
F104 Conventions
F105 Referenced Standards
F106 Definitions

ABA CHAPTER 2: SCOPING REQUIREMENTS

F201 Application
F202 Existing Buildings and Facilities
F203 General Exceptions
F204 Protruding Objects
F205 Operable Parts
F206 Accessible Routes
F207 Accessible Means of Egress
F208 Parking Spaces
F209 Passenger Loading Zones and Bus Stops
F210 Stairways
F211 Drinking Fountains
F212 Kitchens, Kitchenettes, and Sinks
F213 Toilet Facilities and Bathing Facilities

F214 Washing Machines and Clothes Dryers
F215 Fire Alarm Systems
F216 Signs
F217 Telephones
F218 Transportation Facilities
F219 Assistive Listening Systems
F220 Automatic Teller Machines and Fare Machines
F221 Assembly Areas
F222 Dressing, Fitting, and Locker Rooms
F223 Medical Care and Long-Term Care Facilities
F224 Transient Lodging Guest Rooms
F225 Storage
F226 Dining Surfaces and Work Surfaces
F227 Sales and Service
F228 Depositories, Vending Machines, Change Machines, Mail Boxes, and Fuel Dispensers
F229 Windows
F230 Two-Way Communication Systems
F231 Judicial Facilities
F232 Detention Facilities and Correctional Facilities
F233 Residential Facilities
F234 Amusement Rides
F235 Recreational Boating Facilities
F236 Exercise Machines and Equipment
F237 Fishing Piers and Platforms
F238 Golf Facilities
F239 Miniature Golf Facilities
F240 Play Areas
F241 Saunas and Steam Rooms
F242 Swimming Pools, Wading Pools, and Spas
F243 Shooting Facilities with Firing Positions
F244 Camping Facilities
F245 Picnic Facilities
F246 Viewing Areas
F247 Trails
F248 Beach Access Routes

CHAPTER 3: BUILDING BLOCKS

301 General
302 Floor or Ground Surfaces
303 Changes in Level
304 Turning Space
305 Clear Floor or Ground Space
306 Knee and Toe Clearance
307 Protruding Objects
308 Reach Ranges
309 Operable Parts

CHAPTER 4: ACCESSIBLE ROUTES

401 General
402 Accessible Routes
403 Walking Surfaces
404 Doors, Doorways, and Gates
405 Ramps
406 Curb Ramps
407 Elevators
408 Limited-Use/Limited-Application Elevators
409 Private Residence Elevators
410 Platform Lifts

CHAPTER 5: GENERAL SITE AND BUILDING ELEMENTS

501 General
502 Parking Spaces
503 Passenger Loading Zones
504 Stairways
505 Handrails

CHAPTER 6: PLUMBING ELEMENTS AND FACILITIES

601 General
602 Drinking Fountains
603 Toilet and Bathing Rooms
604 Water Closets and Toilet Compartments
605 Urinals
606 Lavatories and Sinks
607 Bathtubs
608 Shower Compartments
609 Grab Bars
610 Seats
611 Washing Machines and Clothes Dryers
612 Saunas and Steam Rooms

CHAPTER 7: COMMUNICATION ELEMENTS AND FEATURES

701 General
702 Fire Alarm Systems
703 Signs
704 Telephones
705 Detectable Warnings
706 Assistive Listening Systems
707 Automatic Teller Machines and Fare Machines
708 Two-Way Communication Systems

CHAPTER 8: SPECIAL ROOMS, SPACES, AND ELEMENTS

801 General
802 Wheelchair Spaces, Companion Seats, and Designated Aisle Seats
803 Dressing, Fitting, and Locker Rooms
804 Kitchens and Kitchenettes
805 Medical Care and Long-Term Care Facilities
806 Transient Lodging Guest Rooms
807 Holding Cells and Housing Cells
808 Courtrooms
809 Residential Dwelling Units
810 Transportation Facilities
811 Storage

CHAPTER 9: BUILT-IN ELEMENTS

901 General
902 Dining Surfaces and Work Surfaces
903 Benches
904 Check-Out Aisles and Sales and Service Counters

CHAPTER 10: RECREATION FACILITIES

1001 General
1002 Amusement Rides
1003 Recreational Boating Facilities
1004 Exercise Machines and Equipment
1005 Fishing Piers and Platforms
1006 Golf Facilities

1007 Miniature Golf Facilities
1008 Play Areas
1009 Swimming Pools, Wading Pools, and Spas
1010 Shooting Facilities with Firing Positions
1011 Outdoor Constructed Features
1012 Parking Spaces Within Camping Units and Picnic Units and Pull-Up Spaces at Dump Stations
1013 Tent Pads and Tent Platforms
1014 Camp Shelters
1015 Viewing Areas
1016 Outdoor Recreation Access Routes
1017 Trails
1018 Beach Access Routes
1019 Conditions for Exceptions

[78 FR 59493, Sept. 26, 2013]

APPENDIX B TO PART 1191—AMERICANS WITH DISABILITIES ACT: SCOPING

ADA CHAPTER 1: APPLICATION AND ADMINISTRATION

101 PURPOSE

101.1 General. This document contains scoping and technical requirements for accessibility to sites, facilities, buildings, and elements by individuals with disabilities. The requirements are to be applied during the design, construction, additions to, and alteration of sites, facilities, buildings, and elements to the extent required by regulations issued by Federal agencies under the Americans with Disabilities Act of 1990 (ADA).

101.2 Effect on Removal of Barriers in Existing Facilities. This document does not address existing facilities unless altered at the discretion of a covered entity. The Department of Justice has authority over existing facilities that are subject to the requirement for removal of barriers under title III of the ADA. Any determination that this document applies to existing facilities subject to the barrier removal requirement is solely within the discretion of the Department of Justice and is effective only to the extent required by regulations issued by the Department of Justice.

102 DIMENSIONS FOR ADULTS AND CHILDREN

102.1 General. The technical requirements are based on adult dimensions and anthropometrics. In addition, this document includes technical requirements based on children's dimensions and anthropometrics for drinking fountains, water closets, toilet compartments, lavatories and sinks, dining surfaces, and work surfaces.

103 EQUIVALENT FACILITATION

103.1 General. Nothing in these requirements prevents the use of designs, products, or technologies as alternatives to those prescribed, provided they result in substantially equivalent or greater accessibility and usability.

104 CONVENTIONS

104.1 Dimensions. Dimensions that are not stated as ''maximum'' or ''minimum'' are absolute.

104.1.1 Construction and Manufacturing Tolerances. All dimensions are subject to conventional industry tolerances except where the requirement is stated as a range with specific minimum and maximum end points.

104.2 Calculation of Percentages. Where the required number of elements or facilities to be provided is determined by calculations of ratios or percentages and remainders or fractions result, the next greater whole number of such elements or facilities shall be provided. Where the determination of the required size or dimension of an element or facility involves ratios or percentages, rounding down for values less than one half shall be permitted.

105 REFERENCED STANDARDS

105.1 General. The standards listed in 105.2 are incorporated by reference in this document and are part of the requirements to the prescribed extent of each such reference. The Director of the Federal Register has approved these standards for incorporation by reference in accordance with 5 U.S.C. 552(a) and 1 CFR part 51. Copies of the referenced standards may be inspected at the Architectural and Transportation Barriers Compliance Board, 1331 F Street NW., Suite 1000, Washington, DC 20004; at the Department of Justice, Civil Rights Division, Disability Rights Section, 1425 New York Avenue NW., Washington, DC 20005; at the Department of Transportation, 1200 New Jersey Avenue SE., Washington, DC 20590; or at the National Archives and Records Administration (NARA). For information on the availability of this material at NARA, call (202) 741–6030, or go to *http://www.archives.gov/federal_register/code_of_federal_regulations/ibr_locations.html*.

105.2 Referenced Standards. The specific edition of the standards listed below are referenced in this document. Where differences occur between this document and the referenced standards, this document applies.

105.2.1 ANSI/BHMA. Copies of the referenced standards may be obtained from the Builders Hardware Manufacturers Association, 355 Lexington Avenue, 15th floor, New York, NY 10017 (*http://www.buildershardware.com*).

ANSI/BHMA A156.10–1999 American National Standard for Power Operated Pedestrian Doors (see 404.3).

ANSI/BHMA A156.19–1997 American National Standard for Power Assist and Low

Energy Power Operated Doors (see 404.3, 408.3.2.1, and 409.3.1).

ANSI/BHMA A156.19–2002 American National Standard for Power Assist and Low Energy Power Operated Doors (see 404.3, 408.3.2.1, and 409.3.1).

105.2.2 ASME. Copies of the referenced standards may be obtained from the American Society of Mechanical Engineers, Two Park Avenue, New York, New York 10016 (*http://www.asme.org*).

ASME A17.1–2000 Safety Code for Elevators and Escalators, including ASME A17.1a–2002 Addenda and ASME A17.1b–2003 Addenda (see 407.1, 408.1, 409.1, and 810.9).

ASME A18.1–1999 Safety Standard for Platform Lifts and Stairway Chairlifts, including ASME A18.1a–2001 Addenda and ASME A18.1b¶2001 Addenda (see 410.1).

ASME A18.1–2003 Safety Standard for Platform Lifts and Stairway Chairlifts, (see 410.1).

105.2.3 ASTM. Copies of the referenced standards may be obtained from the American Society for Testing and Materials, 100 Bar Harbor Drive, West Conshohocken, Pennsylvania 19428 (*http://www.astm.org*).

ASTM F1292–99 Standard Specification for Impact Attenuation of Surface Systems Under and Around Playground Equipment (see 1008.2.6.2).

ASTM F1292–04 Standard Specification for Impact Attenuation of Surfacing Materials Within the Use Zone of Playground Equipment (see 1008.2.6.2).

ASTM F1487–01 Standard Consumer Safety Performance Specification for Playground Equipment for Public Use (see 106.5).

ASTM F1951–99 Standard Specification for Determination of Accessibility of Surface Systems Under and Around Playground Equipment (see 1008.2.6.1).

105.2.4 ICC/IBC. Copies of the referenced standard may be obtained from the International Code Council, 500 New Jersey Avenue NW., Washington, DC 20001 (*www.iccsafe.org*).

International Building Code, 2000 Edition (see 207.1, 207.2, 216.4.2, 216.4.3, and 1005.2.1).

International Building Code, 2001 Supplement (see 207.1 and 207.2).

International Building Code, 2003 Edition (see 207.1, 207.2, 216.4.2, 216.4.3, and 1005.2.1).

105.2.5 NFPA. Copies of the referenced standards may be obtained from the National Fire Protection Association, 1 Batterymarch Park, Quincy, Massachusetts 02169–7471, (*http://www.nfpa.org*).

NFPA 72 National Fire Alarm Code, 1999 Edition (see 702.1, 809.3.1.1, and 809.3.1.2).

NFPA 72 National Fire Alarm Code, 2002 Edition (see 702.1, 809.3.1.1, and 809.3.1.2).

106 DEFINITIONS

106.1 General. For the purpose of this document, the terms defined in 106.5 have the indicated meaning.

106.2 Terms Defined in Referenced Standards. Terms not defined in 106.5 or in regulations issued by the Department of Justice and the Department of Transportation to implement the Americans with Disabilities Act, but specifically defined in a referenced standard, shall have the specified meaning from the referenced standard unless otherwise stated.

106.3 Undefined Terms. The meaning of terms not specifically defined in 106.5 or in regulations issued by the Department of Justice and the Department of Transportation to implement the Americans with Disabilities Act or in referenced standards shall be as defined by collegiate dictionaries in the sense that the context implies.

106.4 Interchangeability. Words, terms and phrases used in the singular include the plural and those used in the plural include the singular.

106.5 Defined Terms.

Accessible. A site, building, facility, or portion thereof that complies with this part.

Accessible Means of Egress. A continuous and unobstructed way of egress travel from any point in a building or facility that provides an accessible route to an area of refuge, a horizontal exit, or a public way.

Addition. An expansion, extension, or increase in the gross floor area or height of a building or facility.

Administrative Authority. A governmental agency that adopts or enforces regulations and guidelines for the design, construction, or alteration of buildings and facilities.

Alteration. A change to a building or facility that affects or could affect the usability of the building or facility or portion thereof. Alterations include, but are not limited to, remodeling, renovation, rehabilitation, reconstruction, historic restoration, resurfacing of circulation paths or vehicular ways, changes or rearrangement of the structural parts or elements, and changes or rearrangement in the plan configuration of walls and full-height partitions. Normal maintenance, reroofing, painting or wallpapering, or changes to mechanical and electrical systems are not alterations unless they affect the usability of the building or facility.

Amusement Attraction. Any facility, or portion of a facility, located within an amusement park or theme park which provides amusement without the use of an amusement device. Amusement attractions include, but are not limited to, fun houses, barrels, and other attractions without seats.

Amusement Ride. A system that moves persons through a fixed course within a defined area for the purpose of amusement.

Amusement Ride Seat. A seat that is built-in or mechanically fastened to an amusement ride intended to be occupied by one or more passengers.

Area of Sport Activity. That portion of a room or space where the play or practice of a sport occurs.

Assembly Area. A building or facility, or portion thereof, used for the purpose of entertainment, educational or civic gatherings, or similar purposes. For the purposes of these requirements, assembly areas include, but are not limited to, classrooms, lecture halls, courtrooms, public meeting rooms, public hearing rooms, legislative chambers, motion picture houses, auditoria, theaters, playhouses, dinner theaters, concert halls, centers for the performing arts, amphitheaters, arenas, stadiums, grandstands, or convention centers.

Assistive Listening System (ALS). An amplification system utilizing transmitters, receivers, and coupling devices to bypass the acoustical space between a sound source and a listener by means of induction loop, radio frequency, infrared, or direct-wired equipment.

Boarding Pier. A portion of a pier where a boat is temporarily secured for the purpose of embarking or disembarking.

Boat Launch Ramp. A sloped surface designed for launching and retrieving trailered boats and other water craft to and from a body of water.

Boat Slip. That portion of a pier, main pier, finger pier, or float where a boat is moored for the purpose of berthing, embarking, or disembarking.

Building. Any structure used or intended for supporting or sheltering any use or occupancy.

Catch Pool. A pool or designated section of a pool used as a terminus for water slide flumes.

Characters. Letters, numbers, punctuation marks and typographic symbols.

Children's Use. Describes spaces and elements specifically designed for use primarily by people 12 years old and younger.

Circulation Path. An exterior or interior way of passage provided for pedestrian travel, including but not limited to, walks, hallways, courtyards, elevators, platform lifts, ramps, stairways, and landings.

Closed-Circuit Telephone. A telephone with a dedicated line such as a house phone, courtesy phone or phone that must be used to gain entry to a facility.

Common Use. Interior or exterior circulation paths, rooms, spaces, or elements that are not for public use and are made available for the shared use of two or more people.

Cross Slope. The slope that is perpendicular to the direction of travel (see running slope).

Curb Ramp. A short ramp cutting through a curb or built up to it.

Detectable Warning. A standardized surface feature built in or applied to walking surfaces or other elements to warn of hazards on a circulation path.

Element. An architectural or mechanical component of a building, facility, space, or site.

Elevated Play Component. A play component that is approached above or below grade and that is part of a composite play structure consisting of two or more play components attached or functionally linked to create an integrated unit providing more than one play activity.

Emergency Transportable Housing Unit. A single or multiple section prefabricated structure that is transportable by a single transport vehicle and that can be set-up and installed on a temporary site in response to an emergency need for temporary housing. Such structures include, but are not limited to, travel trailers, park models, manufactured housing, and other factory-built housing. For the purposes of this document, emergency transportable housing units are considered a type of residential dwelling unit.

Employee Work Area. All or any portion of a space used only by employees and used only for work. Corridors, toilet rooms, kitchenettes and break rooms are not employee work areas.

Entrance. Any access point to a building or portion of a building or facility used for the purpose of entering. An entrance includes the approach walk, the vertical access leading to the entrance platform, the entrance platform itself, vestibule if provided, the entry door or gate, and the hardware of the entry door or gate.

Facility. All or any portion of buildings, structures, site improvements, elements, and pedestrian routes or vehicular ways located on a site.

Gangway. A variable-sloped pedestrian walkway that links a fixed structure or land with a floating structure. Gangways that connect to vessels are not addressed by this document.

Golf Car Passage. A continuous passage on which a motorized golf car can operate.

Ground Level Play Component. A play component that is approached and exited at the ground level.

Key Station. Rapid and light rail stations, and commuter rail stations, as defined under criteria established by the Department of Transportation in 49 CFR 37.47 and 49 CFR 37.51, respectively.

Mail Boxes. Receptacles for the receipt of documents, packages, or other deliverable matter. Mail boxes include, but are not limited to, post office boxes and receptacles provided by commercial mail-receiving agencies, apartment facilities, or schools.

Marked Crossing. A crosswalk or other identified path intended for pedestrian use in crossing a vehicular way.

Mezzanine. An intermediate level or levels between the floor and ceiling of any story with an aggregate floor area of not more

than one-third of the area of the room or space in which the level or levels are located. Mezzanines have sufficient elevation that space for human occupancy can be provided on the floor below.

Occupant Load. The number of persons for which the means of egress of a building or portion of a building is designed.

Operable Part. A component of an element used to insert or withdraw objects, or to activate, deactivate, or adjust the element.

Pictogram. A pictorial symbol that represents activities, facilities, or concepts.

Play Area. A portion of a site containing play components designed and constructed for children.

Play Component. An element intended to generate specific opportunities for play, socialization, or learning. Play components are manufactured or natural; and are stand-alone or part of a composite play structure.

Private Building or Facility. A place of public accommodation or a commercial building or facility subject to title III of the ADA and 28 CFR part 36 or a transportation building or facility subject to title III of the ADA and 49 CFR 37.45.

Public Building or Facility. A building or facility or portion of a building or facility designed, constructed, or altered by, on behalf of, or for the use of a public entity subject to title II of the ADA and 28 CFR part 35 or to title II of the ADA and 49 CFR 37.41 or 37.43.

Public Entrance. An entrance that is not a service entrance or a restricted entrance.

Public Use. Interior or exterior rooms, spaces, or elements that are made available to the public. Public use may be provided at a building or facility that is privately or publicly owned.

Public Way. Any street, alley or other parcel of land open to the outside air leading to a public street, which has been deeded, dedicated or otherwise permanently appropriated to the public for public use and which has a clear width and height of not less than 10 feet (3050 mm).

Qualified Historic Building or Facility. A building or facility that is listed in or eligible for listing in the National Register of Historic Places, or designated as historic under an appropriate State or local law.

Ramp. A walking surface that has a running slope steeper than 1:20.

Residential Dwelling Unit. A unit intended to be used as a residence, that is primarily long-term in nature. Residential dwelling units do not include transient lodging, inpatient medical care, licensed long-term care, and detention or correctional facilities.

Restricted Entrance. An entrance that is made available for common use on a controlled basis but not public use and that is not a service entrance.

Running Slope. The slope that is parallel to the direction of travel (see cross slope).

Self-Service Storage. Building or facility designed and used for the purpose of renting or leasing individual storage spaces to customers for the purpose of storing and removing personal property on a self-service basis.

Service Entrance. An entrance intended primarily for delivery of goods or services.

Site. A parcel of land bounded by a property line or a designated portion of a public right-of-way.

Soft Contained Play Structure. A play structure made up of one or more play components where the user enters a fully enclosed play environment that utilizes pliable materials, such as plastic, netting, or fabric.

Space. A definable area, such as a room, toilet room, hall, assembly area, entrance, storage room, alcove, courtyard, or lobby.

Story. That portion of a building or facility designed for human occupancy included between the upper surface of a floor and upper surface of the floor or roof next above. A story containing one or more mezzanines has more than one floor level.

Structural Frame. The columns and the girders, beams, and trusses having direct connections to the columns and all other members that are essential to the stability of the building or facility as a whole.

Tactile. An object that can be perceived using the sense of touch.

Technically Infeasible. With respect to an alteration of a building or a facility, something that has little likelihood of being accomplished because existing structural conditions would require removing or altering a loadbearing member that is an essential part of the structural frame; or because other existing physical or site constraints prohibit modification or addition of elements, spaces, or features that are in full and strict compliance with the minimum requirements.

Teeing Ground. In golf, the starting place for the hole to be played.

Transfer Device. Equipment designed to facilitate the transfer of a person from a wheelchair or other mobility aid to and from an amusement ride seat.

Transient Lodging. A building or facility containing one or more guest room(s) for sleeping that provides accommodations that are primarily short-term in nature. Transient lodging does not include residential dwelling units intended to be used as a residence, inpatient medical care facilities, licensed long-term care facilities, detention or correctional facilities, or private buildings or facilities that contain not more than five rooms for rent or hire and that are actually occupied by the proprietor as the residence of such proprietor.

Transition Plate. A sloping pedestrian walking surface located at the end(s) of a gangway.

TTY. An abbreviation for teletypewriter. Machinery that employs interactive text-

based communication through the transmission of coded signals across the telephone network. TTYs may include, for example, devices known as TDDs (telecommunication display devices or telecommunication devices for deaf persons) or computers with special modems. TTYs are also called text telephones.

Use Zone. The ground level area beneath and immediately adjacent to a play structure or play equipment that is designated by ASTM F1487 (incorporated by reference, see ''Referenced Standards'' in Chapter 1) for unrestricted circulation around the play equipment and where it is predicted that a user would land when falling from or exiting the play equipment.

Vehicular Way. A route provided for vehicular traffic, such as in a street, driveway, or parking facility.

Walk. An exterior prepared surface for pedestrian use, including pedestrian areas such as plazas and courts.

Wheelchair Space. Space for a single wheelchair and its occupant.

Work Area Equipment. Any machine, instrument, engine, motor, pump, conveyor, or other apparatus used to perform work. As used in this document, this term shall apply only to equipment that is permanently installed or built-in in employee work areas. Work area equipment does not include passenger elevators and other accessible means of vertical transportation.

ADA CHAPTER 2: SCOPING REQUIREMENTS

201 APPLICATION

201.1 Scope. All areas of newly designed and newly constructed buildings and facilities and altered portions of existing buildings and facilities shall comply with these requirements.

201.2 Application Based on Building or Facility Use. Where a site, building, facility, room, or space contains more than one use, each portion shall comply with the applicable requirements for that use.

201.3 Temporary and Permanent Structures. These requirements shall apply to temporary and permanent buildings and facilities.

202 EXISTING BUILDINGS AND FACILITIES

202.1 General. Additions and alterations to existing buildings or facilities shall comply with 202.

202.2 Additions. Each addition to an existing building or facility shall comply with the requirements for new construction. Each addition that affects or could affect the usability of or access to an area containing a primary function shall comply with 202.4.

202.3 Alterations. Where existing elements or spaces are altered, each altered element or space shall comply with the applicable requirements of Chapter 2.

EXCEPTIONS: 1. Unless required by 202.4, where elements or spaces are altered and the circulation path to the altered element or space is not altered, an accessible route shall not be required.

2. In alterations, where compliance with applicable requirements is technically infeasible, the alteration shall comply with the requirements to the maximum extent feasible.

3. Residential dwelling units not required to be accessible in compliance with a standard issued pursuant to the Americans with Disabilities Act or Section 504 of the Rehabilitation Act of 1973, as amended, shall not be required to comply with 202.3.

202.3.1 Prohibited Reduction in Access. An alteration that decreases or has the effect of decreasing the accessibility of a building or facility below the requirements for new construction at the time of the alteration is prohibited.

202.3.2 Extent of Application. An alteration of an existing element, space, or area of a building or facility shall not impose a requirement for accessibility greater than required for new construction.

202.4 Alterations Affecting Primary Function Areas. In addition to the requirements of 202.3, an alteration that affects or could affect the usability of or access to an area containing a primary function shall be made so as to ensure that, to the maximum extent feasible, the path of travel to the altered area, including the rest rooms, telephones, and drinking fountains serving the altered area, are readily accessible to and usable by individuals with disabilities, unless such alterations are disproportionate to the overall alterations in terms of cost and scope as determined under criteria established by the Attorney General. In existing transportation facilities, an area of primary function shall be as defined under regulations published by the Secretary of the Department of Transportation or the Attorney General.

EXCEPTION: Residential dwelling units shall not be required to comply with 202.4.

202.5 Alterations to Qualified Historic Buildings and Facilities. Alterations to a qualified historic building or facility shall comply with 202.3 and 202.4.

EXCEPTION: Where the State Historic Preservation Officer or Advisory Council on Historic Preservation determines that compliance with the requirements for accessible routes, entrances, or toilet facilities would threaten or destroy the historic significance of the building or facility, the exceptions for alterations to qualified historic buildings or facilities for that element shall be permitted to apply.

203 GENERAL EXCEPTIONS

203.1 General. Sites, buildings, facilities, and elements are exempt from these requirements to the extent specified by 203.

203.2 Construction Sites. Structures and sites directly associated with the actual processes of construction, including but not limited to, scaffolding, bridging, materials hoists, materials storage, and construction trailers shall not be required to comply with these requirements or to be on an accessible route. Portable toilet units provided for use exclusively by construction personnel on a construction site shall not be required to comply with 213 or to be on an accessible route.

203.3 Raised Areas. Areas raised primarily for purposes of security, life safety, or fire safety, including but not limited to, observation or lookout galleries, prison guard towers, fire towers, or life guard stands shall not be required to comply with these requirements or to be on an accessible route.

203.4 Limited Access Spaces. Spaces accessed only by ladders, catwalks, crawl spaces, or very narrow passageways shall not be required to comply with these requirements or to be on an accessible route.

203.5 Machinery Spaces. Spaces frequented only by service personnel for maintenance, repair, or occasional monitoring of equipment shall not be required to comply with these requirements or to be on an accessible route. Machinery spaces include, but are not limited to, elevator pits or elevator penthouses; mechanical, electrical or communications equipment rooms; piping or equipment catwalks; water or sewage treatment pump rooms and stations; electric substations and transformer vaults; and highway and tunnel utility facilities.

203.6 Single Occupant Structures. Single occupant structures accessed only by passageways below grade or elevated above standard curb height, including but not limited to, toll booths that are accessed only by underground tunnels, shall not be required to comply with these requirements or to be on an accessible route.

203.7 Detention and Correctional Facilities. In detention and correctional facilities, common use areas that are used only by inmates or detainees and security personnel and that do not serve holding cells or housing cells required to comply with 232, shall not be required to comply with these requirements or to be on an accessible route.

203.8 Residential Facilities. In facilities with residential dwelling units, common use areas that do not serve residential dwelling units required to provide mobility features complying with 809.2 or emergency transportable housing unit pads designed and constructed to accept the installation of units with mobility features complying with 809.2 shall not be required to comply with these requirements or to be on an accessible route.

203.9 Employee Work Areas. Spaces and elements within employee work areas shall only be required to comply with 206.2.8, 207.1, and 215.3 and shall be designed and constructed so that individuals with disabilities can approach, enter, and exit the employee work area. Employee work areas, or portions of employee work areas, other than raised courtroom stations, that are less than 300 square feet (28 m^2) and elevated 7 inches (180 mm) or more above the finish floor or ground where the elevation is essential to the function of the space shall not be required to comply with these requirements or to be on an accessible route.

203.10 Raised Refereeing, Judging, and Scoring Areas. Raised structures used solely for refereeing, judging, or scoring a sport shall not be required to comply with these requirements or to be on an accessible route.

203.11 Water Slides. Water slides shall not be required to comply with these requirements or to be on an accessible route.

203.12 Animal Containment Areas. Animal containment areas that are not for public use shall not be required to comply with these requirements or to be on an accessible route.

203.13 Raised Boxing or Wrestling Rings. Raised boxing or wrestling rings shall not be required to comply with these requirements or to be on an accessible route.

203.14 Raised Diving Boards and Diving Platforms. Raised diving boards and diving platforms shall not be required to comply with these requirements or to be on an accessible route.

204 Protruding Objects

204.1 General. Protruding objects on circulation paths shall comply with 307.

Exceptions: 1. Within areas of sport activity, protruding objects on circulation paths shall not be required to comply with 307.

2. Within play areas, protruding objects on circulation paths shall not be required to comply with 307 provided that ground level accessible routes provide vertical clearance in compliance with 1008.2.

205 Operable Parts

205.1 General. Operable parts on accessible elements, accessible routes, and in accessible rooms and spaces shall comply with 309.

Exceptions: 1. Operable parts that are intended for use only by service or maintenance personnel shall not be required to comply with 309.

2. Electrical or communication receptacles serving a dedicated use shall not be required to comply with 309.

3. Except within emergency transportable housing units required to provide mobility features complying with 809.2, where two or more outlets are provided in a kitchen above a length of counter top that is uninterrupted by a sink or appliance, one outlet shall not be required to comply with 309.

4. Floor electrical receptacles shall not be required to comply with 309.

5. HVAC diffusers shall not be required to comply with 309.

6. Except for light switches, where redundant controls are provided for a single element, one control in each space shall not be required to comply with 309.

7. Cleats and other boat securement devices shall not be required to comply with 309.3.

8. Exercise machines and exercise equipment shall not be required to comply with 309.

9. Operable parts located within residential dwelling units not required to provide mobility features complying with 809.2 and transient lodging guest rooms not required to provide mobility features complying with 806.2 shall not be required to comply with 309.

10. In emergency transportable housing units required to provide mobility features complying with 809.2, operable parts located beneath the unit body shall not be required to comply with 309.

11. Water shut-off valves shall not be required to comply with 309.

206 ACCESSIBLE ROUTES

206.1 General. Accessible routes shall be provided in accordance with 206 and shall comply with Chapter 4.

206.2 Where Required. Accessible routes shall be provided where required by 206.2.

206.2.1 Site Arrival Points. At least one accessible route shall be provided within the site from accessible parking spaces and accessible passenger loading zones; public streets and sidewalks; and public transportation stops to the accessible building or facility entrance they serve.

EXCEPTIONS: 1. Where exceptions for alterations to qualified historic buildings or facilities are permitted by 202.5, no more than one accessible route from a site arrival point to an accessible entrance shall be required.

2. An accessible route shall not be required between site arrival points and the building or facility entrance if the only means of access between them is a vehicular way not providing pedestrian access.

206.2.2 Within a Site. At least one accessible route shall connect accessible buildings, accessible facilities, accessible elements, and accessible spaces that are on the same site.

EXCEPTION: An accessible route shall not be required between accessible buildings, accessible facilities, accessible elements, and accessible spaces if the only means of access between them is a vehicular way not providing pedestrian access.

206.2.3 Multi-Story Buildings and Facilities. At least one accessible route shall connect each story and mezzanine in multistory buildings and facilities.

EXCEPTIONS: 1. In private buildings or facilities that are less than three stories or that have less than 3000 square feet (279 m^2) per story, an accessible route shall not be required to connect stories provided that the building or facility is not a shopping center, a shopping mall, the professional office of a health care provider, a terminal, depot or other station used for specified public transportation, an airport passenger terminal, or another type of facility as determined by the Attorney General.

2. Where a two-story public building or facility has one story with an occupant load of five or fewer persons that does not contain public use space, that story shall not be required to be connected to the story above or below.

3. In detention and correctional facilities, an accessible route shall not be required to connect stories where cells with mobility features required to comply with 807.2, all common use areas serving cells with mobility features required to comply with 807.2, and all public use areas are on an accessible route.

4. In facilities with residential dwelling units, an accessible route shall not be required to connect stories where residential dwelling units with mobility features required to comply with 809.2, all common use areas serving residential dwelling units with mobility features required to comply with 809.2, and public use areas serving residential dwelling units are on an accessible route.

5. Within multi-story transient lodging guest rooms with mobility features required to comply with 806.2, an accessible route shall not be required to connect stories provided that spaces complying with 806.2 are on an accessible route and sleeping accommodations for two persons minimum are provided on a story served by an accessible route.

6. In air traffic control towers, an accessible route shall not be required to serve the cab and the floor immediately below the cab.

7. Where exceptions for alterations to qualified historic buildings or facilities are permitted by 202.5, an accessible route shall not be required to stories located above or below the accessible story.

206.2.3.1 Stairs and Escalators in Existing Buildings. In alterations and additions, where an escalator or stair is provided where none existed previously and major structural modifications are necessary for the installation, an accessible route shall be provided between the levels served by the escalator or stair unless exempted by 206.2.3 Exceptions 1 through 7.

206.2.4 Spaces and Elements. At least one accessible route shall connect accessible building or facility entrances with all accessible spaces and elements within the building or facility which are otherwise connected by a circulation path unless exempted by 206.2.3 Exceptions 1 through 7.

EXCEPTIONS: 1. Raised courtroom stations, including judges' benches, clerks' stations, bailiffs' stations, deputy clerks' stations, and court reporters' stations shall not be required to provide vertical access provided that the required clear floor space, maneuvering space, and, if appropriate, electrical service are installed at the time of initial construction to allow future installation of a means of vertical access complying with 405, 407, 408, or 410 without requiring substantial reconstruction of the space.

2. In assembly areas with fixed seating required to comply with 221, an accessible route shall not be required to serve fixed seating where wheelchair spaces required to be on an accessible route are not provided.

3. Accessible routes shall not be required to connect mezzanines where buildings or facilities have no more than one story. In addition, accessible routes shall not be required to connect stories or mezzanines where multi-story buildings or facilities are exempted by 206.2.3 Exceptions 1 through 7.

206.2.5 Restaurants and Cafeterias. In restaurants and cafeterias, an accessible route shall be provided to all dining areas, including raised or sunken dining areas, and outdoor dining areas.

EXCEPTIONS: 1. In buildings or facilities not required to provide an accessible route between stories, an accessible route shall not be required to a mezzanine dining area where the mezzanine contains less than 25 percent of the total combined area for seating and dining and where the same decor and services are provided in the accessible area.

2. In alterations, an accessible route shall not be required to existing raised or sunken dining areas, or to all parts of existing outdoor dining areas where the same services and decor are provided in an accessible space usable by the public and not restricted to use by people with disabilities.

3. In sports facilities, tiered dining areas providing seating required to comply with 221 shall be required to have accessible routes serving at least 25 percent of the dining area provided that accessible routes serve seating complying with 221 and each tier is provided with the same services.

206.2.6 Performance Areas. Where a circulation path directly connects a performance area to an assembly seating area, an accessible route shall directly connect the assembly seating area with the performance area. An accessible route shall be provided from performance areas to ancillary areas or facilities used by performers unless exempted by 206.2.3 Exceptions 1 through 7.

206.2.7 Press Boxes. Press boxes in assembly areas shall be on an accessible route.

EXCEPTIONS: 1. An accessible route shall not be required to press boxes in bleachers that have points of entry at only one level provided that the aggregate area of all press boxes is 500 square feet (46 m^2) maximum.

2. An accessible route shall not be required to free-standing press boxes that are elevated above grade 12 feet (3660 mm) minimum provided that the aggregate area of all press boxes is 500 square feet (46 m^2) maximum.

206.2.8 Employee Work Areas. Common use circulation paths within employee work areas shall comply with 402.

EXCEPTIONS: 1. Common use circulation paths located within employee work areas that are less than 1000 square feet (93 m^2) and defined by permanently installed partitions, counters, casework, or furnishings shall not be required to comply with 402.

2. Common use circulation paths located within employee work areas that are an integral component of work area equipment shall not be required to comply with 402.

3. Common use circulation paths located within exterior employee work areas that are fully exposed to the weather shall not be required to comply with 402.

206.2.9 Amusement Rides. Amusement rides required to comply with 234 shall provide accessible routes in accordance with 206.2.9. Accessible routes serving amusement rides shall comply with Chapter 4 except as modified by 1002.2.

206.2.9.1 Load and Unload Areas. Load and unload areas shall be on an accessible route. Where load and unload areas have more than one loading or unloading position, at least one loading and unloading position shall be on an accessible route.

206.2.9.2 Wheelchair Spaces, Ride Seats Designed for Transfer, and Transfer Devices. When amusement rides are in the load and unload position, wheelchair spaces complying with 1002.4, amusement ride seats designed for transfer complying with 1002.5, and transfer devices complying with 1002.6 shall be on an accessible route.

206.2.10 Recreational Boating Facilities. Boat slips required to comply with 235.2 and boarding piers at boat launch ramps required to comply with 235.3 shall be on an accessible route. Accessible routes serving recreational boating facilities shall comply with Chapter 4, except as modified by 1003.2.

206.2.11 Bowling Lanes. Where bowling lanes are provided, at least 5 percent, but no fewer than one of each type of bowling lane, shall be on an accessible route.

206.2.12 Court Sports. In court sports, at least one accessible route shall directly connect both sides of the court.

206.2.13 Exercise Machines and Equipment. Exercise machines and equipment required to comply with 236 shall be on an accessible route.

206.2.14 Fishing Piers and Platforms. Fishing piers and platforms shall be on an accessible route. Accessible routes serving fishing piers and platforms shall comply with Chapter 4 except as modified by 1005.1.

206.2.15 Golf Facilities. At least one accessible route shall connect accessible elements and spaces within the boundary of the golf course. In addition, accessible routes serving golf car rental areas; bag drop areas; course weather shelters complying with 238.2.3; course toilet rooms; and practice putting greens, practice teeing grounds, and teeing stations at driving ranges complying with 238.3 shall comply with Chapter 4 except as modified by 1006.2.

EXCEPTION: Golf car passages complying with 1006.3 shall be permitted to be used for all or part of accessible routes required by 206.2.15.

206.2.16 Miniature Golf Facilities. Holes required to comply with 239.2, including the start of play, shall be on an accessible route. Accessible routes serving miniature golf facilities shall comply with Chapter 4 except as modified by 1007.2.

206.2.17 Play Areas. Play areas shall provide accessible routes in accordance with 206.2.17. Accessible routes serving play areas shall comply with Chapter 4 except as modified by 1008.2.

206.2.17.1 Ground Level and Elevated Play Components. At least one accessible route shall be provided within the play area. The accessible route shall connect ground level play components required to comply with 240.2.1 and elevated play components required to comply with 240.2.2, including entry and exit points of the play components.

206.2.17.2 Soft Contained Play Structures. Where three or fewer entry points are provided for soft contained play structures, at least one entry point shall be on an accessible route. Where four or more entry points are provided for soft contained play structures, at least two entry points shall be on an accessible route.

206.3 Location. Accessible routes shall coincide with or be located in the same area as general circulation paths. Where circulation paths are interior, required accessible routes shall also be interior.

206.4 Entrances. Entrances shall be provided in accordance with 206.4. Entrance doors, doorways, and gates shall comply with 404 and shall be on an accessible route complying with 402.

EXCEPTIONS: 1. Where an alteration includes alterations to an entrance, and the building or facility has another entrance complying with 404 that is on an accessible route, the altered entrance shall not be required to comply with 206.4 unless required by 202.4.

2. Where exceptions for alterations to qualified historic buildings or facilities are permitted by 202.5, no more than one public entrance shall be required to comply with 206.4. Where no public entrance can comply with 206.4 under criteria established in 202.5 Exception, then either an unlocked entrance not used by the public shall comply with 206.4; or a locked entrance complying with 206.4 with a notification system or remote monitoring shall be provided.

206.4.1 Public Entrances. In addition to entrances required by 206.4.2 through 206.4.9, at least 60 percent of all public entrances shall comply with 404.

206.4.2 Parking Structure Entrances. Where direct access is provided for pedestrians from a parking structure to a building or facility entrance, each direct access to the building or facility entrance shall comply with 404.

206.4.3 Entrances from Tunnels or Elevated Walkways. Where direct access is provided for pedestrians from a pedestrian tunnel or elevated walkway to a building or facility, at least one direct entrance to the building or facility from each tunnel or walkway shall comply with 404.

206.4.4 Transportation Facilities. In addition to the requirements of 206.4.2, 206.4.3, and 206.4.5 through 206.4.9, transportation facilities shall provide entrances in accordance with 206.4.4.

206.4.4.1 Location. In transportation facilities, where different entrances serve different transportation fixed routes or groups of fixed routes, at least one public entrance serving each fixed route or group of fixed routes shall comply with 404.

EXCEPTION: Entrances to key stations and existing intercity rail stations retrofitted in accordance with 49 CFR 37.49 or 49 CFR 37.51 shall not be required to comply with 206.4.4.1.

206.4.4.2 Direct Connections. Direct connections to other facilities shall provide an accessible route complying with 404 from the point of connection to boarding platforms and all transportation system elements required to be accessible. Any elements provided to facilitate future direct connections shall be on an accessible route connecting boarding platforms and all transportation system elements required to be accessible.

EXCEPTION: In key stations and existing intercity rail stations, existing direct connections shall not be required to comply with 404.

206.4.4.3 Key Stations and Intercity Rail Stations. Key stations and existing intercity rail stations required by Subpart C of 49 CFR part 37 to be altered, shall have at least one entrance complying with 404.

206.4.5 Tenant Spaces. At least one accessible entrance to each tenancy in a facility shall comply with 404.

EXCEPTION: Self-service storage facilities not required to comply with 225.3 shall not be required to be on an accessible route.

206.4.6 Residential Dwelling Unit Primary Entrance. In residential dwelling units required to provide mobility features complying with 809.2, at least one primary entrance shall comply with 404. The primary

entrance to a residential dwelling unit shall not be to a bedroom.

206.4.7 Restricted Entrances. Where restricted entrances are provided to a building or facility, at least one restricted entrance to the building or facility shall comply with 404.

206.4.8 Service Entrances. If a service entrance is the only entrance to a building or to a tenancy in a facility, that entrance shall comply with 404.

206.4.9 Entrances for Inmates or Detainees. Where entrances used only by inmates or detainees and security personnel are provided at judicial facilities, detention facilities, or correctional facilities, at least one such entrance shall comply with 404.

206.5 Doors, Doorways, and Gates. Doors, doorways, and gates providing user passage shall be provided in accordance with 206.5.

206.5.1 Entrances. Each entrance to a building or facility required to comply with 206.4 shall have at least one door, doorway, or gate complying with 404.

206.5.2 Rooms and Spaces. Within a building or facility, at least one door, doorway, or gate serving each room or space complying with these requirements shall comply with 404.

206.5.3 Transient Lodging Facilities. In transient lodging facilities, entrances, doors, and doorways providing user passage into and within guest rooms that are not required to provide mobility features complying with 806.2 shall comply with 404.2.3.

EXCEPTION: Shower and sauna doors in guest rooms that are not required to provide mobility features complying with 806.2 shall not be required to comply with 404.2.3.

206.5.4 Residential Dwelling Units. In residential dwelling units required to provide mobility features complying with 809.2, all doors and doorways providing user passage shall comply with 404.

206.6 Elevators. Elevators provided for passengers shall comply with 407. Where multiple elevators are provided, each elevator shall comply with 407.

EXCEPTIONS: 1. In a building or facility permitted to use the exceptions to 206.2.3 or permitted by 206.7 to use a platform lift, elevators complying with 408 shall be permitted.

2. Elevators complying with 408 or 409 shall be permitted in multi-story residential dwelling units.

206.6.1 Existing Elevators. Where elements of existing elevators are altered, the same element shall also be altered in all elevators that are programmed to respond to the same hall call control as the altered elevator and shall comply with the requirements of 407 for the altered element.

206.7 Platform Lifts. Platform lifts shall comply with 410. Platform lifts shall be permitted as a component of an accessible route in new construction in accordance with 206.7. Platform lifts shall be permitted as a component of an accessible route in an existing building or facility. In emergency transportable housing units, platform lifts shall not be used at the primary entrance to a unit required to provide mobility features complying with 809.2.

206.7.1 Performance Areas and Speakers' Platforms. Platform lifts shall be permitted to provide accessible routes to performance areas and speakers' platforms.

206.7.2 Wheelchair Spaces. Platform lifts shall be permitted to provide an accessible route to comply with the wheelchair space dispersion and line-of-sight requirements of 221 and 802.

206.7.3 Incidental Spaces. Platform lifts shall be permitted to provide an accessible route to incidental spaces which are not public use spaces and which are occupied by five persons maximum.

206.7.4 Judicial Spaces. Platform lifts shall be permitted to provide an accessible route to: jury boxes and witness stands; raised courtroom stations including, judges' benches, clerks' stations, bailiffs' stations, deputy clerks' stations, and court reporters' stations; and to depressed areas such as the well of a court.

206.7.5 Existing Site Constraints. Platform lifts shall be permitted where existing exterior site constraints make use of a ramp or elevator infeasible.

206.7.6 Guest Rooms and Residential Dwelling Units. Platform lifts shall be permitted to connect levels within transient lodging guest rooms required to provide mobility features complying with 806.2 or residential dwelling units required to provide mobility features complying with 809.2.

206.7.7 Amusement Rides. Platform lifts shall be permitted to provide accessible routes to load and unload areas serving amusement rides.

206.7.8 Play Areas. Platform lifts shall be permitted to provide accessible routes to play components or soft contained play structures.

206.7.9 Team or Player Seating. Platform lifts shall be permitted to provide accessible routes to team or player seating areas serving areas of sport activity.

206.7.10 Recreational Boating Facilities and Fishing Piers and Platforms. Platform lifts shall be permitted to be used instead of gangways that are part of accessible routes serving recreational boating facilities and fishing piers and platforms.

206.8 Security Barriers. Security barriers, including but not limited to, security bollards and security check points, shall not obstruct a required accessible route or accessible means of egress.

EXCEPTION: Where security barriers incorporate elements that cannot comply with

these requirements such as certain metal detectors, fluoroscopes, or other similar devices, the accessible route shall be permitted to be located adjacent to security screening devices. The accessible route shall permit persons with disabilities passing around security barriers to maintain visual contact with their personal items to the same extent provided others passing through the security barrier.

207 ACCESSIBLE MEANS OF EGRESS

207.1 General. Means of egress shall comply with section 1003.2.13 of the International Building Code (2000 edition and 2001 Supplement) or section 1007 of the International Building Code (2003 edition) (incorporated by reference, see ''Referenced Standards'' in Chapter 1).

EXCEPTIONS: 1. Where means of egress are permitted by local building or life safety codes to share a common path of egress travel, accessible means of egress shall be permitted to share a common path of egress travel.

2. Areas of refuge shall not be required in detention and correctional facilities.

207.2 Platform Lifts. Standby power shall be provided for platform lifts permitted by section 1003.2.13.4 of the International Building Code (2000 edition and 2001 Supplement) or section 1007.5 of the International Building Code (2003 edition) (incorporated by reference, see ''Referenced Standards'' in Chapter 1) to serve as a part of an accessible means of egress.

208 PARKING SPACES

208.1 General. Where parking spaces are provided, parking spaces shall be provided in accordance with 208.

EXCEPTION: Parking spaces used exclusively for buses, trucks, other delivery vehicles, law enforcement vehicles, or vehicular impound shall not be required to comply with 208 provided that lots accessed by the public are provided with a passenger loading zone complying with 503.

208.2 Minimum Number. Parking spaces complying with 502 shall be provided in accordance with Table 208.2 except as required by 208.2.1, 208.2.2, and 208.2.3. Where more than one parking facility is provided on a site, the number of accessible spaces provided on the site shall be calculated according to the number of spaces required for each parking facility.

TABLE 208.2—PARKING SPACES

Total number of parking spaces provided in parking facility	Minimum number of required accessible parking spaces
1 to 25	1.
26 to 50	2.
51 to 75	3.

TABLE 208.2—PARKING SPACES—Continued

Total number of parking spaces provided in parking facility	Minimum number of required accessible parking spaces
76 to 100	4.
101 to 150	5.
151 to 200	6.
201 to 300	7.
301 to 400	8.
401 to 500	9.
501 to 1000	2 percent of total.
1001 and over	20, plus 1 for each 100, or fraction thereof, over 1000.

208.2.1 Hospital Outpatient Facilities. Ten percent of patient and visitor parking spaces provided to serve hospital outpatient facilities shall comply with 502.

208.2.2 Rehabilitation Facilities and Outpatient Physical Therapy Facilities. Twenty percent of patient and visitor parking spaces provided to serve rehabilitation facilities specializing in treating conditions that affect mobility and outpatient physical therapy facilities shall comply with 502.

208.2.3 Residential Facilities. Parking spaces provided to serve facilities with residential dwelling units shall comply with 208.2.3.

208.2.3.1 Parking for Residents. Where at least one parking space is provided for each residential dwelling unit, at least one parking space complying with 502 shall be provided for each residential dwelling unit required to provide mobility features complying with 809.2.

208.2.3.2 Additional Parking Spaces for Residents. Where the total number of parking spaces provided for each residential dwelling unit exceeds one parking space per residential dwelling unit, 2 percent, but no fewer than one space, of all the parking spaces not covered by 208.2.3.1 shall comply with 502.

208.2.3.3 Parking for Guests, Employees, and Other Non-Residents. Where parking spaces are provided for persons other than residents, parking shall be provided in accordance with Table 208.2.

208.2.4 Van Parking Spaces. For every six or fraction of six parking spaces required by 208.2 to comply with 502, at least one shall be a van parking space complying with 502.

208.3 Location. Parking facilities shall comply with 208.3.

208.3.1 General. Parking spaces complying with 502 that serve a particular building or facility shall be located on the shortest accessible route from parking to an entrance complying with 206.4. Where parking serves more than one accessible entrance, parking spaces complying with 502 shall be dispersed and located on the shortest accessible route to the accessible entrances. In parking facilities that do not serve a particular building or facility, parking spaces complying with

502 shall be located on the shortest accessible route to an accessible pedestrian entrance of the parking facility.

EXCEPTIONS: 1. All van parking spaces shall be permitted to be grouped on one level within a multi-story parking facility.

2. Parking spaces shall be permitted to be located in different parking facilities if substantially equivalent or greater accessibility is provided in terms of distance from an accessible entrance or entrances, parking fee, and user convenience.

208.3.2 Residential Facilities. In facilities containing residential dwelling units required to provide mobility features complying with 809.2, parking spaces provided in accordance with 208.2.3.1 shall be located on the shortest accessible route to the residential dwelling unit entrance they serve. Spaces provided in accordance with 208.2.3.2 shall be dispersed throughout all types of parking provided for the residential dwelling units.

EXCEPTION: Parking spaces provided in accordance with 208.2.3.2 shall not be required to be dispersed throughout all types of parking if substantially equivalent or greater accessibility is provided in terms of distance from an accessible entrance, parking fee, and user convenience.

209 PASSENGER LOADING ZONES AND BUS STOPS

209.1 General. Passenger loading zones shall be provided in accordance with 209.

209.2 Type. Where provided, passenger loading zones shall comply with 209.2.

209.2.1 Passenger Loading Zones. Passenger loading zones, except those required to comply with 209.2.2 and 209.2.3, shall provide at least one passenger loading zone complying with 503 in every continuous 100 linear feet (30 m) of loading zone space, or fraction thereof.

209.2.2 Bus Loading Zones. In bus loading zones restricted to use by designated or specified public transportation vehicles, each bus bay, bus stop, or other area designated for lift or ramp deployment shall comply with 810.2.

209.2.3 On-Street Bus Stops. On-street bus stops shall comply with 810.2 to the maximum extent practicable.

209.3 Medical Care and Long-Term Care Facilities. At least one passenger loading zone complying with 503 shall be provided at an accessible entrance to licensed medical care and licensed long-term care facilities where the period of stay exceeds twenty-four hours.

209.4 Valet Parking. Parking facilities that provide valet parking services shall provide at least one passenger loading zone complying with 503.

209.5 Mechanical Access Parking Garages. Mechanical access parking garages shall provide at least one passenger loading zone complying with 503 at vehicle drop-off and vehicle pick-up areas.

210 STAIRWAYS

210.1 General. Interior and exterior stairs that are part of a means of egress shall comply with 504.

EXCEPTIONS: 1. In detention and correctional facilities, stairs that are not located in public use areas shall not be required to comply with 504.

2. In alterations, stairs between levels that are connected by an accessible route shall not be required to comply with 504, except that handrails complying with 505 shall be provided when the stairs are altered.

3. In assembly areas, aisle stairs shall not be required to comply with 504.

4. Stairs that connect play components shall not be required to comply with 504.

211 DRINKING FOUNTAINS

211.1 General. Where drinking fountains are provided on an exterior site, on a floor, or within a secured area they shall be provided in accordance with 211.

EXCEPTION: In detention or correctional facilities, drinking fountains only serving holding or housing cells not required to comply with 232 shall not be required to comply with 211.

211.2 Minimum Number. No fewer than two drinking fountains shall be provided. One drinking fountain shall comply with 602.1 through 602.6 and one drinking fountain shall comply with 602.7.

EXCEPTION: Where a single drinking fountain complies with 602.1 through 602.6 and 602.7, it shall be permitted to be substituted for two separate drinking fountains.

211.3 More Than Minimum Number. Where more than the minimum number of drinking fountains specified in 211.2 are provided, 50 percent of the total number of drinking fountains provided shall comply with 602.1 through 602.6, and 50 percent of the total number of drinking fountains provided shall comply with 602.7.

EXCEPTION: Where 50 percent of the drinking fountains yields a fraction, 50 percent shall be permitted to be rounded up or down provided that the total number of drinking fountains complying with 211 equals 100 percent of drinking fountains.

212 KITCHENS, KITCHENETTES, AND SINKS

212.1 General. Where provided, kitchens, kitchenettes, and sinks shall comply with 212.

212.2 Kitchens and Kitchenettes. Kitchens and kitchenettes shall comply with 804.

212.3 Sinks. Where sinks are provided, at least 5 percent, but no fewer than one, of each type provided in each accessible room or space shall comply with 606.

EXCEPTION: Mop or service sinks shall not be required to comply with 212.3.

213 TOILET FACILITIES AND BATHING FACILITIES

213.1 General. Where toilet facilities and bathing facilities are provided, they shall comply with 213. Where toilet facilities and bathing facilities are provided in facilities permitted by 206.2.3 Exceptions 1 and 2 not to connect stories by an accessible route, toilet facilities and bathing facilities shall be provided on a story connected by an accessible route to an accessible entrance.

213.2 Toilet Rooms and Bathing Rooms. Where toilet rooms are provided, each toilet room shall comply with 603. Where bathing rooms are provided, each bathing room shall comply with 603.

EXCEPTIONS: 1. In alterations where it is technically infeasible to comply with 603, altering existing toilet or bathing rooms shall not be required where a single unisex toilet room or bathing room complying with 213.2.1 is provided and located in the same area and on the same floor as existing inaccessible toilet or bathing rooms.

2. Where exceptions for alterations to qualified historic buildings or facilities are permitted by 202.5, no fewer than one toilet room for each sex complying with 603 or one unisex toilet room complying with 213.2.1 shall be provided.

3. Where multiple single user portable toilet or bathing units are clustered at a single location, no more than 5 percent of the toilet units and bathing units at each cluster shall be required to comply with 603. Portable toilet units and bathing units complying with 603 shall be identified by the International Symbol of Accessibility complying with 703.7.2.1.

4. Where multiple single user toilet rooms are clustered at a single location, no more than 50 percent of the single user toilet rooms for each use at each cluster shall be required to comply with 603.

213.2.1 Unisex (Single-Use or Family) Toilet and Unisex Bathing Rooms. Unisex toilet rooms shall contain not more than one lavatory, and two water closets without urinals or one water closet and one urinal. Unisex bathing rooms shall contain one shower or one shower and one bathtub, one lavatory, and one water closet. Doors to unisex toilet rooms and unisex bathing rooms shall have privacy latches.

213.3 Plumbing Fixtures and Accessories. Plumbing fixtures and accessories provided in a toilet room or bathing room required to comply with 213.2 shall comply with 213.3.

213.3.1 Toilet Compartments. Where toilet compartments are provided, at least one toilet compartment shall comply with 604.8.1. In addition to the compartment required to comply with 604.8.1, at least one compartment shall comply with 604.8.2 where six or more toilet compartments are provided, or where the combination of urinals and water closets totals six or more fixtures.

213.3.2 Water Closets. Where water closets are provided, at least one shall comply with 604.

213.3.3 Urinals. Where more than one urinal is provided, at least one shall comply with 605.

213.3.4 Lavatories. Where lavatories are provided, at least one shall comply with 606 and shall not be located in a toilet compartment.

213.3.5 Mirrors. Where mirrors are provided, at least one shall comply with 603.3.

213.3.6 Bathing Facilities. Where bathtubs or showers are provided, at least one bathtub complying with 607 or at least one shower complying with 608 shall be provided.

213.3.7 Coat Hooks and Shelves. Where coat hooks or shelves are provided in toilet rooms without toilet compartments, at least one of each type shall comply with 603.4. Where coat hooks or shelves are provided in toilet compartments, at least one of each type complying with 604.8.3 shall be provided in toilet compartments required to comply with 213.3.1. Where coat hooks or shelves are provided in bathing facilities, at least one of each type complying with 603.4 shall serve fixtures required to comply with 213.3.6.

214 WASHING MACHINES AND CLOTHES DRYERS

214.1 General. Where provided, washing machines and clothes dryers shall comply with 214.

214.2 Washing Machines. Where three or fewer washing machines are provided, at least one shall comply with 611. Where more than three washing machines are provided, at least two shall comply with 611.

214.3 Clothes Dryers. Where three or fewer clothes dryers are provided, at least one shall comply with 611. Where more than three clothes dryers are provided, at least two shall comply with 611.

215 FIRE ALARM SYSTEMS

215.1 General. Where fire alarm systems provide audible alarm coverage, alarms shall comply with 215.

EXCEPTION: In existing facilities, visible alarms shall not be required except where an existing fire alarm system is upgraded or replaced, or a new fire alarm system is installed.

215.2 Public and Common Use Areas. Alarms in public use areas and common use areas shall comply with 702.

215.3 Employee Work Areas. Where employee work areas have audible alarm coverage, the wiring system shall be designed so that visible alarms complying with 702 can be integrated into the alarm system.

215.4 Transient Lodging. Guest rooms required to comply with 224.4 shall provide alarms complying with 702.

215.5 Residential Dwelling Units. Where provided in residential dwelling units required to provide communication features complying with 809.3, alarms shall comply with 702.

216 SIGNS

216.1 General. Signs shall be provided in accordance with 216 and shall comply with 703.

EXCEPTIONS: 1. Building directories, menus, seat and row designations in assembly areas, occupant names, building addresses, and company names and logos shall not be required to comply with 216.

2. In parking facilities, signs shall not be required to comply with 216.2, 216.3, and 216.6 through 216.12.

3. Temporary, 7 days or less, signs shall not be required to comply with 216.

4. In detention and correctional facilities, signs not located in public use areas shall not be required to comply with 216.

216.2 Designations. Interior and exterior signs identifying permanent rooms and spaces shall comply with 703.1, 703.2, and 703.5. Where pictograms are provided as designations of permanent interior rooms and spaces, the pictograms shall comply with 703.6 and shall have text descriptors complying with 703.2 and 703.5.

EXCEPTION: Exterior signs that are not located at the door to the space they serve shall not be required to comply with 703.2.

216.3 Directional and Informational Signs. Signs that provide direction to or information about interior spaces and facilities of the site shall comply with 703.5.

216.4 Means of Egress. Signs for means of egress shall comply with 216.4.

216.4.1 Exit Doors. Doors at exit passageways, exit discharge, and exit stairways shall be identified by tactile signs complying with 703.1, 703.2, and 703.5.

216.4.2 Areas of Refuge. Signs required by section 1003.2.13.5.4 of the International Building Code (2000 edition) or section 1007.6.4 of the International Building Code (2003 edition) (incorporated by reference, see ''Referenced Standards'' in Chapter 1) to provide instructions in areas of refuge shall comply with 703.5.

216.4.3 Directional Signs. Signs required by section 1003.2.13.6 of the International Building Code (2000 edition) or section 1007.7 of the International Building Code (2003 edition) (incorporated by reference, see ''Referenced Standards'' in Chapter 1) to provide directions to accessible means of egress shall comply with 703.5.

216.5 Parking. Parking spaces complying with 502 shall be identified by signs complying with 502.6.

EXCEPTIONS: 1. Where a total of four or fewer parking spaces, including accessible parking spaces, are provided on a site, identification of accessible parking spaces shall not be required.

2. In residential facilities, where parking spaces are assigned to specific residential dwelling units, identification of accessible parking spaces shall not be required.

216.6 Entrances. Where not all entrances comply with 404, entrances complying with 404 shall be identified by the International Symbol of Accessibility complying with 703.7.2.1. Directional signs complying with 703.5 that indicate the location of the nearest entrance complying with 404 shall be provided at entrances that do not comply with 404.

216.7 Elevators. Where existing elevators do not comply with 407, elevators complying with 407 shall be clearly identified with the International Symbol of Accessibility complying with 703.7.2.1.

216.8 Toilet Rooms and Bathing Rooms. Where existing toilet rooms or bathing rooms do not comply with 603, directional signs indicating the location of the nearest toilet room or bathing room complying with 603 within the facility shall be provided. Signs shall comply with 703.5 and shall include the International Symbol of Accessibility complying with 703.7.2.1. Where existing toilet rooms or bathing rooms do not comply with 603, the toilet rooms or bathing rooms complying with 603 shall be identified by the International Symbol of Accessibility complying with 703.7.2.1. Where clustered single user toilet rooms or bathing facilities are permitted to use exceptions to 213.2, toilet rooms or bathing facilities complying with 603 shall be identified by the International Symbol of Accessibility complying with 703.7.2.1 unless all toilet rooms and bathing facilities comply with 603.

216.9 TTYs. Identification and directional signs for public TTYs shall be provided in accordance with 216.9.

216.9.1 Identification Signs. Public TTYs shall be identified by the International Symbol of TTY complying with 703.7.2.2.

216.9.2 Directional Signs. Directional signs indicating the location of the nearest public TTY shall be provided at all banks of public pay telephones not containing a public TTY. In addition, where signs provide direction to public pay telephones, they shall also provide direction to public TTYs. Directional signs shall comply with 703.5 and shall include the International Symbol of TTY complying with 703.7.2.2.

216.10 Assistive Listening Systems. Each assembly area required by 219 to provide assistive listening systems shall provide signs informing patrons of the availability of the assistive listening system. Assistive listening signs shall comply with 703.5 and shall

include the International Symbol of Access for Hearing Loss complying with 703.7.2.4.

EXCEPTION: Where ticket offices or windows are provided, signs shall not be required at each assembly area provided that signs are displayed at each ticket office or window informing patrons of the availability of assistive listening systems.

216.11 Check-Out Aisles. Where more than one check-out aisle is provided, check-out aisles complying with 904.3 shall be identified by the International Symbol of Accessibility complying with 703.7.2.1. Where check-out aisles are identified by numbers, letters, or functions, signs identifying check-out aisles complying with 904.3 shall be located in the same location as the checkout aisle identification.

EXCEPTION: Where all check-out aisles serving a single function comply with 904.3, signs complying with 703.7.2.1 shall not be required.

216.12 Amusement Rides. Signs identifying the type of access provided on amusement rides shall be provided at entries to queues and waiting lines. In addition, where accessible unload areas also serve as accessible load areas, signs indicating the location of the accessible load and unload areas shall be provided at entries to queues and waiting lines.

217 TELEPHONES

217.1 General. Where coin-operated public pay telephones, coinless public pay telephones, public closed-circuit telephones, public courtesy phones, or other types of public telephones are provided, public telephones shall be provided in accordance with 217 for each type of public telephone provided. For purposes of this section, a bank of telephones shall be considered to be two or more adjacent telephones.

217.2 Wheelchair Accessible Telephones. Where public telephones are provided, wheelchair accessible telephones complying with 704.2 shall be provided in accordance with Table 217.2.

EXCEPTION: Drive-up only public telephones shall not be required to comply with 217.2.

TABLE 217.2—WHEELCHAIR ACCESSIBLE TELEPHONES

Number of telephones provided on a floor, level, or exterior site	Minimum number of required wheelchair accessible telephones
1 or more single units	1 per floor, level, and exterior site.
1 bank	1 per floor, level, and exterior site.
2 or more banks	1 per bank.

217.3 Volume Controls. All public telephones shall have volume controls complying with 704.3.

217.4 TTYs. TTYs complying with 704.4 shall be provided in accordance with 217.4.

217.4.1 Bank Requirement. Where four or more public pay telephones are provided at a bank of telephones, at least one public TTY complying with 704.4 shall be provided at that bank.

EXCEPTION: TTYs shall not be required at banks of telephones located within 200 feet (61 m) of, and on the same floor as, a bank containing a public TTY.

217.4.2 Floor Requirement. TTYs in public buildings shall be provided in accordance with 217.4.2.1. TTYs in private buildings shall be provided in accordance with 217.4.2.2.

217.4.2.1 Public Buildings. Where at least one public pay telephone is provided on a floor of a public building, at least one public TTY shall be provided on that floor.

217.4.2.2 Private Buildings. Where four or more public pay telephones are provided on a floor of a private building, at least one public TTY shall be provided on that floor.

217.4.3 Building Requirement. TTYs in public buildings shall be provided in accordance with 217.4.3.1. TTYs in private buildings shall be provided in accordance with 217.4.3.2.

217.4.3.1 Public Buildings. Where at least one public pay telephone is provided in a public building, at least one public TTY shall be provided in the building. Where at least one public pay telephone is provided in a public use area of a public building, at least one public TTY shall be provided in the public building in a public use area.

217.4.3.2 Private Buildings. Where four or more public pay telephones are provided in a private building, at least one public TTY shall be provided in the building.

217.4.4 Exterior Site Requirement. Where four or more public pay telephones are provided on an exterior site, at least one public TTY shall be provided on the site.

217.4.5 Rest Stops, Emergency Roadside Stops, and Service Plazas. Where at least one public pay telephone is provided at a public rest stop, emergency roadside stop, or service plaza, at least one public TTY shall be provided.

217.4.6 Hospitals. Where at least one public pay telephone is provided serving a hospital emergency room, hospital recovery room, or hospital waiting room, at least one public TTY shall be provided at each location.

217.4.7 Transportation Facilities. In transportation facilities, in addition to the requirements of 217.4.1 through 217.4.4, where at least one public pay telephone serves a particular entrance to a bus or rail facility, at least one public TTY shall be provided to serve that entrance. In airports, in addition to the requirements of 217.4.1 through 217.4.4, where four or more public pay telephones are located in a terminal outside the security areas, a concourse within the security areas, or a baggage claim area in a terminal, at

least one public TTY shall be provided in each location.

217.4.8 Detention and Correctional Facilities. In detention and correctional facilities, where at least one pay telephone is provided in a secured area used only by detainees or inmates and security personnel, at least one TTY shall be provided in at least one secured area.

217.5 Shelves for Portable TTYs. Where a bank of telephones in the interior of a building consists of three or more public pay telephones, at least one public pay telephone at the bank shall be provided with a shelf and an electrical outlet in accordance with 704.5.

EXCEPTIONS: 1. Secured areas of detention and correctional facilities where shelves and outlets are prohibited for purposes of security or safety shall not be required to comply with 217.5.

2. The shelf and electrical outlet shall not be required at a bank of telephones with a TTY.

218 TRANSPORTATION FACILITIES

218.1 General. Transportation facilities shall comply with 218.

218.2 New and Altered Fixed Guideway Stations. New and altered stations in rapid rail, light rail, commuter rail, intercity rail, high speed rail, and other fixed guideway systems shall comply with 810.5 through 810.10.

218.3 Key Stations and Existing Intercity Rail Stations. Key stations and existing intercity rail stations shall comply with 810.5 through 810.10.

218.4 Bus Shelters. Where provided, bus shelters shall comply with 810.3.

218.5 Other Transportation Facilities. In other transportation facilities, public address systems shall comply with 810.7 and clocks shall comply with 810.8.

219 ASSISTIVE LISTENING SYSTEMS

219.1 General. Assistive listening systems shall be provided in accordance with 219 and shall comply with 706.

219.2 Required Systems. In each assembly area where audible communication is integral to the use of the space, an assistive listening system shall be provided.

EXCEPTION: Other than in courtrooms, assistive listening systems shall not be required where audio amplification is not provided.

219.3 Receivers. Receivers complying with 706.2 shall be provided for assistive listening systems in each assembly area in accordance with Table 219.3. Twenty-five percent minimum of receivers provided, but no fewer than two, shall be hearing-aid compatible in accordance with 706.3.

EXCEPTIONS: 1. Where a building contains more than one assembly area and the assembly areas required to provide assistive listening systems are under one management, the total number of required receivers shall be permitted to be calculated according to the total number of seats in the assembly areas in the building provided that all receivers are usable with all systems.

2. Where all seats in an assembly area are served by an induction loop assistive listening system, the minimum number of receivers required by Table 219.3 to be hearing-aid compatible shall not be required to be provided.

TABLE 219.3—RECEIVERS FOR ASSISTIVE LISTENING SYSTEMS

Capacity of seating in assembly area	Minimum number of required receivers	Minimum number of required receivers required to be hearing-aid compatible
50 or less	2	2.
51 to 200	2, plus 1 per 25 seats over 50 seats.	2.
201 to 500	2, plus 1 per 25 seats over 50 seats [1].	1 per 4 receivers.[1]
501 to 1000	20, plus 1 per 33 seats over 500 seats [1].	1 per 4 receivers.[1]
1001 to 2000	35, plus 1 per 50 seats over 1000 seats [1].	1 per 4 receivers.[1]
2001 and over	55 plus 1 per 100 seats over 2000 seats [1].	1 per 4 receivers.[1]

[1] Or fraction thereof.

220 AUTOMATIC TELLER MACHINES AND FARE MACHINES

220.1 General. Where automatic teller machines or self-service fare vending, collection, or adjustment machines are provided, at least one of each type provided at each location shall comply with 707. Where bins are provided for envelopes, waste paper, or other purposes, at least one of each type shall comply with 811.

221 ASSEMBLY AREAS

221.1 General. Assembly areas shall provide wheelchair spaces, companion seats, and designated aisle seats complying with 221 and 802. In addition, lawn seating shall comply with 221.5.

221.2 Wheelchair Spaces. Wheelchair spaces complying with 221.2 shall be provided in assembly areas with fixed seating.

221.2.1 Number and Location. Wheelchair spaces shall be provided complying with 221.2.1.

221.2.1.1 General Seating. Wheelchair spaces complying with 802.1 shall be provided in accordance with Table 221.2.1.1.

TABLE 221.2.1.1—NUMBER OF WHEELCHAIR SPACES IN ASSEMBLY AREAS

Number of seats	Minimum number of required wheelchair spaces
4 to 25	1.
26 to 50	2.
51 to 150	4.
151 to 300	5.
301 to 500	6.
501 to 5000	6, plus 1 for each 150, or fraction thereof, between 501 through 5000.
5001 and over	36, plus 1 for each 200, or fraction thereof, over 5000.

221.2.1.2 Luxury Boxes, Club Boxes, and Suites in Arenas, Stadiums, and Grandstands. In each luxury box, club box, and suite within arenas, stadiums, and grandstands, wheelchair spaces complying with 802.1 shall be provided in accordance with Table 221.2.1.1.

221.2.1.3 Other Boxes. In boxes other than those required to comply with 221.2.1.2, the total number of wheelchair spaces required shall be determined in accordance with Table 221.2.1.1. Wheelchair spaces shall be located in not less than 20 percent of all boxes provided. Wheelchair spaces shall comply with 802.1.

221.2.1.4 Team or Player Seating. At least one wheelchair space complying with 802.1 shall be provided in team or player seating areas serving areas of sport activity.

EXCEPTION: Wheelchair spaces shall not be required in team or player seating areas serving bowling lanes not required to comply with 206.2.11.

221.2.2 Integration. Wheelchair spaces shall be an integral part of the seating plan.

221.2.3 Lines of Sight and Dispersion. Wheelchair spaces shall provide lines of sight complying with 802.2 and shall comply with 221.2.3. In providing lines of sight, wheelchair spaces shall be dispersed. Wheelchair spaces shall provide spectators with choices of seating locations and viewing angles that are substantially equivalent to, or better than, the choices of seating locations and viewing angles available to all other spectators. When the number of wheelchair spaces required by 221.2.1 has been met, further dispersion shall not be required.

EXCEPTION: Wheelchair spaces in team or player seating areas serving areas of sport activity shall not be required to comply with 221.2.3.

221.2.3.1 Horizontal Dispersion. Wheelchair spaces shall be dispersed horizontally.

EXCEPTIONS: 1. Horizontal dispersion shall not be required in assembly areas with 300 or fewer seats if the companion seats required by 221.3 and wheelchair spaces are located within the 2nd or 3rd quartile of the total row length. Intermediate aisles shall be included in determining the total row length. If the row length in the 2nd and 3rd quartile of a row is insufficient to accommodate the required number of companion seats and wheelchair spaces, the additional companion seats and wheelchair spaces shall be permitted to be located in the 1st and 4th quartile of the row.

2. In row seating, two wheelchair spaces shall be permitted to be located side-by-side.

221.2.3.2 Vertical Dispersion. Wheelchair spaces shall be dispersed vertically at varying distances from the screen, performance area, or playing field. In addition, wheelchair spaces shall be located in each balcony or mezzanine that is located on an accessible route.

EXCEPTIONS: 1. Vertical dispersion shall not be required in assembly areas with 300 or fewer seats if the wheelchair spaces provide viewing angles that are equivalent to, or better than, the average viewing angle provided in the facility.

2. In bleachers, wheelchair spaces shall not be required to be provided in rows other than rows at points of entry to bleacher seating.

221.3 Companion Seats. At least one companion seat complying with 802.3 shall be provided for each wheelchair space required by 221.2.1.

221.4 Designated Aisle Seats. At least 5 percent of the total number of aisle seats provided shall comply with 802.4 and shall be the aisle seats located closest to accessible routes.

EXCEPTION: Team or player seating areas serving areas of sport activity shall not be required to comply with 221.4.

221.5 Lawn Seating. Lawn seating areas and exterior overflow seating areas, where fixed seats are not provided, shall connect to an accessible route.

222 DRESSING, FITTING, AND LOCKER ROOMS

222.1 General. Where dressing rooms, fitting rooms, or locker rooms are provided, at least 5 percent, but no fewer than one, of each type of use in each cluster provided shall comply with 803.

EXCEPTION: In alterations, where it is technically infeasible to provide rooms in accordance with 222.1, one room for each sex on each level shall comply with 803. Where only unisex rooms are provided, unisex rooms shall be permitted.

222.2 Coat Hooks and Shelves. Where coat hooks or shelves are provided in dressing, fitting or locker rooms without individual compartments, at least one of each type shall comply with 803.5. Where coat hooks or shelves are provided in individual compartments at least one of each type complying with 803.5 shall be provided in individual compartments in dressing, fitting, or locker rooms required to comply with 222.1.

223 MEDICAL CARE AND LONG-TERM CARE FACILITIES

223.1 General. In licensed medical care facilities and licensed long-term care facilities where the period of stay exceeds twenty four hours, patient or resident sleeping rooms shall be provided in accordance with 223.

EXCEPTION: Toilet rooms that are part of critical or intensive care patient sleeping rooms shall not be required to comply with 603.

223.1.1 Alterations. Where sleeping rooms are altered or added, the requirements of 223 shall apply only to the sleeping rooms being altered or added until the number of sleeping rooms complies with the minimum number required for new construction.

223.2 Hospitals, Rehabilitation Facilities, Psychiatric Facilities and Detoxification Facilities. Hospitals, rehabilitation facilities, psychiatric facilities and detoxification facilities shall comply with 223.2.

223.2.1 Facilities Not Specializing in Treating Conditions That Affect Mobility. In facilities not specializing in treating conditions that affect mobility, at least 10 percent, but no fewer than one, of the patient sleeping rooms shall provide mobility features complying with 805.

223.2.2 Facilities Specializing in Treating Conditions That Affect Mobility. In facilities specializing in treating conditions that affect mobility, 100 percent of the patient sleeping rooms shall provide mobility features complying with 805.

223.3 Long-Term Care Facilities. In licensed long-term care facilities, at least 50 percent, but no fewer than one, of each type of resident sleeping room shall provide mobility features complying with 805.

224 TRANSIENT LODGING GUEST ROOMS

224.1 General. Transient lodging facilities shall provide guest rooms in accordance with 224.

224.1.1 Alterations. Where guest rooms are altered or added, the requirements of 224 shall apply only to the guest rooms being altered or added until the number of guest rooms complies with the minimum number required for new construction.

224.1.2 Guest Room Doors and Doorways. Entrances, doors, and doorways providing user passage into and within guest rooms that are not required to provide mobility features complying with 806.2 shall comply with 404.2.3.

EXCEPTION: Shower and sauna doors in guest rooms that are not required to provide mobility features complying with 806.2 shall not be required to comply with 404.2.3.

224.2 Guest Rooms with Mobility Features. In transient lodging facilities, guest rooms with mobility features complying with 806.2 shall be provided in accordance with Table 224.2.

TABLE 224.2—GUEST ROOMS WITH MOBILITY FEATURES

Total number of guest rooms provided	Minimum number of required rooms without roll-in showers	Minimum number of required rooms with roll-in showers	Total number of required rooms
1 to 25	1	0	1.
26 to 50	2	0	2.
51 to 75	3	1	4.
76 to 100	4	1	5.
101 to 150	5	2	7.
151 to 200	6	2	8.
201 to 300	7	3	10.
301 to 400	8	4	12.
401 to 500	9	4	13.
501 to 1000	2 percent of total	1 percent of total	3 percent of total.
1001 and over	20, plus 1 for each 100, or fraction thereof, over 1000.	10, plus 1 for each 100, or fraction thereof, over 1000.	30, plus 2 for each 100, or fraction thereof, over 1000.

224.3 Beds. In guest rooms having more than 25 beds, 5 percent minimum of the beds shall have clear floor space complying with 806.2.3.

224.4 Guest Rooms with Communication Features. In transient lodging facilities, guest rooms with communication features complying with 806.3 shall be provided in accordance with Table 224.4.

TABLE 224.4—GUEST ROOMS WITH COMMUNICATION FEATURES

Total number of guest rooms provided	Minimum number of required guest rooms with communication features
2 to 25	2.
26 to 50	4.
51 to 75	7.
76 to 100	9.
101 to 150	12.
151 to 200	14.
201 to 300	17.
301 to 400	20.

TABLE 224.4—GUEST ROOMS WITH COMMUNICATION FEATURES—Continued

Total number of guest rooms provided	Minimum number of required guest rooms with communication features
401 to 500	22.
501 to 1000	5 percent of total.
1001 and over	50, plus 3 for each 100 over 1000.

224.5 Dispersion. Guest rooms required to provide mobility features complying with 806.2 and guest rooms required to provide communication features complying with 806.3 shall be dispersed among the various classes of guest rooms, and shall provide choices of types of guest rooms, number of beds, and other amenities comparable to the choices provided to other guests. Where the minimum number of guest rooms required to comply with 806 is not sufficient to allow for complete dispersion, guest rooms shall be dispersed in the following priority: guest room type, number of beds, and amenities. At least one guest room required to provide mobility features complying with 806.2 shall also provide communication features complying with 806.3. Not more than 10 percent of guest rooms required to provide mobility features complying with 806.2 shall be used to satisfy the minimum number of guest rooms required to provide communication features complying with 806.3.

225 STORAGE

225.1 General. Storage facilities shall comply with 225.

225.2 Storage. Where storage is provided in accessible spaces, at least one of each type shall comply with 811.

225.2.1 Lockers. Where lockers are provided, at least 5 percent, but no fewer than one of each type, shall comply with 811.

225.2.2 Self-Service Shelving. Self-service shelves shall be located on an accessible route complying with 402. Self-service shelving shall not be required to comply with 308.

225.3 Self-Service Storage Facilities. Self-service storage facilities shall provide individual self-service storage spaces complying with these requirements in accordance with Table 225.3.

TABLE 225.3—SELF-SERVICE STORAGE FACILITIES

Total spaces in facility	Minimum number of spaces required to be accessible
1 to 200	5 percent, but no fewer than 1.
201 and over	10, plus 2 percent of total number of units over 200.

225.3.1 Dispersion. Individual self-service storage spaces shall be dispersed throughout the various classes of spaces provided. Where more classes of spaces are provided than the number required to be accessible, the number of spaces shall not be required to exceed that required by Table 225.3. Self-service storage spaces complying with Table 225.3 shall not be required to be dispersed among buildings in a multi-building facility.

226 DINING SURFACES AND WORK SURFACES

226.1 General. Where dining surfaces are provided for the consumption of food or drink, at least 5 percent of the seating spaces and standing spaces at the dining surfaces shall comply with 902. In addition, where work surfaces are provided for use by other than employees, at least 5 percent shall comply with 902.

EXCEPTIONS: 1. Sales counters and service counters shall not be required to comply with 902.

2. Check writing surfaces provided at check-out aisles not required to comply with 904.3 shall not be required to comply with 902.

226.2 Dispersion. Dining surfaces and work surfaces required to comply with 902 shall be dispersed throughout the space or facility containing dining surfaces and work surfaces.

227 SALES AND SERVICE

227.1 General. Where provided, check-out aisles, sales counters, service counters, food service lines, queues, and waiting lines shall comply with 227 and 904.

227.2 Check-Out Aisles. Where check-out aisles are provided, check-out aisles complying with 904.3 shall be provided in accordance with Table 227.2. Where check-out aisles serve different functions, check-out aisles complying with 904.3 shall be provided in accordance with Table 227.2 for each function. Where check-out aisles are dispersed throughout the building or facility, check-out aisles complying with 904.3 shall be dispersed.

EXCEPTION: Where the selling space is under 5000 square feet (465 m^2) no more than one check-out aisle complying with 904.3 shall be required.

TABLE 227.2—CHECK-OUT AISLES

Number of check-out aisles of each function	Minimum number of check-out aisles of each function required to comply with 904.3
1 to 4	1.
5 to 8	2.
9 to 15	3.
16 and over	3, plus 20 percent of additional aisles.

227.2.1 Altered Check-Out Aisles. Where check-out aisles are altered, at least one of each check-out aisle serving each function

shall comply with 904.3 until the number of check-out aisles complies with 227.2.

227.3 Counters. Where provided, at least one of each type of sales counter and service counter shall comply with 904.4. Where counters are dispersed throughout the building or facility, counters complying with 904.4 also shall be dispersed.

227.4 Food Service Lines. Food service lines shall comply with 904.5. Where self-service shelves are provided, at least 50 percent, but no fewer than one, of each type provided shall comply with 308.

227.5 Queues and Waiting Lines. Queues and waiting lines servicing counters or check-out aisles required to comply with 904.3 or 904.4 shall comply with 403.

228 Depositories, Vending Machines, Change Machines, Mail Boxes, and Fuel Dispensers

228.1 General. Where provided, at least one of each type of depository, vending machine, change machine, and fuel dispenser shall comply with 309.

Exception: Drive-up only depositories shall not be required to comply with 309.

228.2 Mail Boxes. Where mail boxes are provided in an interior location, at least 5 percent, but no fewer than one, of each type shall comply with 309. In facilities with residential dwelling units, where mail boxes are provided for each residential dwelling unit, mail boxes complying with 309 shall be provided for each residential dwelling unit required to provide mobility features complying with 809.2.

229 Windows

229.1 General. Where glazed openings are provided in accessible rooms or spaces for operation by occupants, at least one opening shall comply with 309. Each glazed opening required by an administrative authority to be operable shall comply with 309.

Exceptions: 1. Glazed openings in residential dwelling units required to comply with 809 shall not be required to comply with 229.

2. Glazed openings in guest rooms required to provide communication features and in guest rooms required to comply with 206.5.3 shall not be required to comply with 229.

230 Two-Way Communication Systems

230.1 General. Where a two-way communication system is provided to gain admittance to a building or facility or to restricted areas within a building or facility, the system shall comply with 708.

231 Judicial Facilities

231.1 General. Judicial facilities shall comply with 231.

231.2 Courtrooms. Each courtroom shall comply with 808.

231.3 Holding Cells. Where provided, central holding cells and court-floor holding cells shall comply with 231.3.

231.3.1 Central Holding Cells. Where separate central holding cells are provided for adult male, juvenile male, adult female, or juvenile female, one of each type shall comply with 807.2. Where central holding cells are provided and are not separated by age or sex, at least one cell complying with 807.2 shall be provided.

231.3.2 Court-Floor Holding Cells. Where separate court-floor holding cells are provided for adult male, juvenile male, adult female, or juvenile female, each courtroom shall be served by one cell of each type complying with 807.2. Where court-floor holding cells are provided and are not separated by age or sex, courtrooms shall be served by at least one cell complying with 807.2. Cells may serve more than one courtroom.

231.4 Visiting Areas. Visiting areas shall comply with 231.4.

231.4.1 Cubicles and Counters. At least 5 percent, but no fewer than one, of cubicles shall comply with 902 on both the visitor and detainee sides. Where counters are provided, at least one shall comply with 904.4.2 on both the visitor and detainee sides.

Exception: The detainee side of cubicles or counters at non-contact visiting areas not serving holding cells required to comply with 231 shall not be required to comply with 902 or 904.4.2.

231.4.2 Partitions. Where solid partitions or security glazing separate visitors from detainees at least one of each type of cubicle or counter partition shall comply with 904.6.

232 Detention Facilities and Correctional Facilities

232.1 General. Buildings, facilities, or portions thereof, in which people are detained for penal or correction purposes, or in which the liberty of the inmates is restricted for security reasons shall comply with 232.

232.2 General Holding Cells and General Housing Cells. General holding cells and general housing cells shall be provided in accordance with 232.2.

Exception: Alterations to cells shall not be required to comply except to the extent determined by the Attorney General.

232.2.1 Cells with Mobility Features. At least 2 percent, but no fewer than one, of the total number of cells in a facility shall provide mobility features complying with 807.2.

232.2.1.1 Beds. In cells having more than 25 beds, at least 5 percent of the beds shall have clear floor space complying with 807.2.3.

232.2.2 Cells with Communication Features. At least 2 percent, but no fewer than one, of the total number of general holding cells and general housing cells equipped with audible emergency alarm systems and permanently installed telephones within the

cell shall provide communication features complying with 807.3.

232.3 Special Holding Cells and Special Housing Cells. Where special holding cells or special housing cells are provided, at least one cell serving each purpose shall provide mobility features complying with 807.2. Cells subject to this requirement include, but are not limited to, those used for purposes of orientation, protective custody, administrative or disciplinary detention or segregation, detoxification, and medical isolation.

EXCEPTION: Alterations to cells shall not be required to comply except to the extent determined by the Attorney General.

232.4 Medical Care Facilities. Patient bedrooms or cells required to comply with 223 shall be provided in addition to any medical isolation cells required to comply with 232.3.

232.5 Visiting Areas. Visiting areas shall comply with 232.5.

232.5.1 Cubicles and Counters. At least 5 percent, but no fewer than one, of cubicles shall comply with 902 on both the visitor and detainee sides. Where counters are provided, at least one shall comply with 904.4.2 on both the visitor and detainee or inmate sides.

EXCEPTION: The inmate or detainee side of cubicles or counters at non-contact visiting areas not serving holding cells or housing cells required to comply with 232 shall not be required to comply with 902 or 904.4.2.

232.5.2 Partitions. Where solid partitions or security glazing separate visitors from detainees or inmates at least one of each type of cubicle or counter partition shall comply with 904.6.

233 RESIDENTIAL FACILITIES

233.1 General. Facilities with residential dwelling units shall comply with 233.

233.2 Residential Dwelling Units Provided by Entities Subject to HUD Section 504 Regulations.

233.2 Residential Dwelling Units Provided by Entities Subject to HUD Section 504 Regulations. Where facilities with residential dwelling units are provided by entities subject to regulations issued by the Department of Housing and Urban Development (HUD) under section 504 of the Rehabilitation Act of 1973, as amended, such entities shall provide residential dwelling units with mobility features complying with 809.2 in a number required by the applicable HUD regulations. Residential dwelling units required to provide mobility features complying with 809.2 shall be on an accessible route as required by 206. In addition, such entities shall provide residential dwelling units with communication features complying with 809.3 in a number required by the applicable HUD regulations. Entities subject to 233.2 shall not be required to comply with 233.3.

233.3 Residential Dwelling Units Provided by Entities Not Subject to HUD Section 504 Regulations. Facilities with residential dwelling units provided by entities not subject to regulations issued by the Department of Housing and Urban Development (HUD) under Section 504 of the Rehabilitation Act of 1973, as amended, shall comply with 233.3.

233.3.1 Residential Dwelling Units with Mobility Features. Facilities, other than those containing emergency transportable housing units, shall comply with 233.3.1.1. Facilities containing emergency transportable housing units shall comply with 233.3.1.2.

233.3.1.1 Facilities Other Than Those Containing Emergency Transportable Housing Units. At least 5 percent, but no fewer than one, of the total number of residential dwelling units, other than emergency transportable housing units, in the facility shall provide mobility features complying with 809.2 and shall be on an accessible route as required by 206.

EXCEPTION: Where facilities contain 15 or fewer residential dwelling units, the requirements of 233.3.1.1 shall apply to the total number of residential dwelling units that are constructed under a single contract, or are developed as a whole, whether or not located on a common site.

233.3.1.2 Facilities Containing Emergency Transportable Housing Units. Emergency transportable housing units with mobility features shall be provided in accordance with 233.3.1.2.

233.3.1.2.1 Private Sites Provided by Occupant of Unit. Where emergency transportable housing units are installed on private sites provided by the occupant of the unit, entities shall provide emergency transportable housing units with mobility features complying with 809.2 as determined by a needs assessment conducted by the entity providing the emergency transportable housing units.

233.3.1.2.2 Group Sites. Where group sites are developed for the installation of emergency transportable housing units, entities shall comply with 233.3.1.2.2.

233.3.1.2.2.1 Unit Pads. At least 10 percent, but no fewer than one, of the unit pads prepared for the installation of emergency transportable housing units at each group site shall be designed and constructed to accept the installation of emergency transportable housing units with mobility features complying with 809.2 and shall be on an accessible route as required by 206.

233.3.1.2.2.2 Units Installed. At least 5 percent, but no fewer than one, of the total number of the emergency transportable housing units installed at each group site shall provide mobility features complying with 809.2.

233.3.2 Residential Dwelling Units with Communication Features. Facilities, other than those containing emergency transportable housing units, shall comply with 233.3.2.1. Facilities containing emergency

transportable housing units shall comply with 233.3.2.2.

233.3.2.1 Facilities Other Than Those Containing Emergency Transportable Housing Units. At least 2 percent, but no fewer than one, of the total number of residential dwelling units, other than emergency transportable housing units, in the facility shall provide communication features complying with 809.3.

EXCEPTION: Where facilities contain 15 or fewer residential dwelling units, the requirements of 233.3.2.1 shall apply to the total number of residential dwelling units that are constructed under a single contract, or are developed as a whole, whether or not located on a common site.

233.3.2.2 Facilities Containing Emergency Transportable Housing Units. Entities shall provide emergency transportable housing units with residential dwelling unit smoke alarms complying with 809.3.1 and, where weather alert systems are provided, with weather alert systems complying with 809.3.4 as determined by a needs assessment conducted by the entity providing the emergency transportable housing units.

233.3.3 Residential Dwelling Units for Sale. Residential dwelling units offered for sale shall provide accessible features to the extent required by regulations issued by Federal agencies under the Americans with Disabilities Act or Section 504 of the Rehabilitation Act of 1973, as amended.

233.3.4 Additions. Where an addition to an existing building results in an increase in the number of residential dwelling units, the requirements of 233.3.1.1 and 233.3.2.1 shall apply only to the residential dwelling units that are added until the total number of residential dwelling units complies with the minimum number required by 233.3.1.1 and 233.3.2.1. Residential dwelling units required to comply with 233.3.1.1 shall be on an accessible route as required by 206.

233.3.5 Alterations. Alterations shall comply with 233.3.5.

EXCEPTION: Where compliance with 809.2.1, 809.2.3, or 809.2.4 is technically infeasible, or where it is technically infeasible to provide an accessible route to a residential dwelling unit, the entity shall be permitted to alter or construct a comparable residential dwelling unit to comply with 809.2 provided that the minimum number of residential dwelling units required by 233.3.1.1 and 233.3.2.1, as applicable, is satisfied.

233.3.5.1 Alterations to Vacated Buildings. Where a building is vacated for the purposes of alteration, and the altered building contains more than 15 residential dwelling units, at least 5 percent of the residential dwelling units shall comply with 809.2 and shall be on an accessible route as required by 206. In addition, at least 2 percent of the residential dwelling units shall comply with 809.3.

233.3.5.2 Alterations to Individual Residential Dwelling Units. In individual residential dwelling units, where a bathroom or a kitchen is substantially altered, and at least one other room is altered, the requirements of 233.3.1 shall apply to the altered residential dwelling units until the total number of residential dwelling units complies with the minimum number required by 233.3.1.1 and 233.3.2.1. Residential dwelling units required to comply with 233.3.1.1 shall be on an accessible route as required by 206.

EXCEPTION: Where facilities contain 15 or fewer residential dwelling units, the requirements of 233.3.1.1 and 233.3.2.1 shall apply to the total number of residential dwelling units that are altered under a single contract, or are developed as a whole, whether or not located on a common site.

233.3.6 Dispersion. Residential dwelling units required to provide mobility features complying with 809.2 and residential dwelling units required to provide communication features complying with 809.3 shall be dispersed among the various types of residential dwelling units in the facility and shall provide choices of residential dwelling units comparable to, and integrated with, those available to other residents.

EXCEPTION 1: Where multi-story residential dwelling units are one of the types of residential dwelling units provided, one-story residential dwelling units shall be permitted as a substitute for multi-story residential dwelling units where equivalent spaces and amenities are provided in the one-story residential dwelling unit.

2. Emergency transportable housing units required to provide mobility features complying with 809.2 shall not be required to be dispersed among the various types of residential dwelling units in a facility or to provide choices of residential dwelling units comparable to those available to other residents.

234 AMUSEMENT RIDES

234.1 General. Amusement rides shall comply with 234.

EXCEPTION: Mobile or portable amusement rides shall not be required to comply with 234.

234.2 Load and Unload Areas. Load and unload areas serving amusement rides shall comply with 1002.3.

234.3 Minimum Number. Amusement rides shall provide at least one wheelchair space complying with 1002.4, or at least one amusement ride seat designed for transfer complying with 1002.5, or at least one transfer device complying with 1002.6.

EXCEPTIONS: 1. Amusement rides that are controlled or operated by the rider shall not be required to comply with 234.3.

2. Amusement rides designed primarily for children, where children are assisted on and

off the ride by an adult, shall not be required to comply with 234.3.

3. Amusement rides that do not provide amusement ride seats shall not be required to comply with 234.3.

234.4 Existing Amusement Rides. Where existing amusement rides are altered, the alteration shall comply with 234.4.

234.4.1 Load and Unload Areas. Where load and unload areas serving existing amusement rides are newly designed and constructed, the load and unload areas shall comply with 1002.3.

234.4.2 Minimum Number. Where the structural or operational characteristics of an amusement ride are altered to the extent that the amusement ride's performance differs from that specified by the manufacturer or the original design, the amusement ride shall comply with 234.3.

235 Recreational Boating Facilities

235.1 General. Recreational boating facilities shall comply with 235.

235.2 Boat Slips. Boat slips complying with 1003.3.1 shall be provided in accordance with Table 235.2. Where the number of boat slips is not identified, each 40 feet (12 m) of boat slip edge provided along the perimeter of the pier shall be counted as one boat slip for the purpose of this section.

TABLE 235.2—BOAT SLIPS

Total number of boat slips provided in facility	Minimum number of required accessible boat slips
1 to 25	1.
26 to 50	2.
51 to 100	3.
101 to 150	4.
151 to 300	5.
301 to 400	6.
401 to 500	7.
501 to 600	8.
601 to 700	9.
701 to 800	10.
801 to 900	11.
901 to 1000	12.
1001 and over	12, plus 1 for every 100, or fraction thereof, over 1000.

235.2.1 Dispersion. Boat slips complying with 1003.3.1 shall be dispersed throughout the various types of boat slips provided. Where the minimum number of boat slips required to comply with 1003.3.1 has been met, no further dispersion shall be required.

235.3 Boarding Piers at Boat Launch Ramps. Where boarding piers are provided at boat launch ramps, at least 5 percent, but no fewer than one, of the boarding piers shall comply with 1003.3.2.

236 Exercise Machines and Equipment

236.1 General. At least one of each type of exercise machine and equipment shall comply with 1004.

237 Fishing Piers and Platforms

237.1 General. Fishing piers and platforms shall comply with 1005.

238 Golf Facilities

238.1 General. Golf facilities shall comply with 238.

238.2 Golf Courses. Golf courses shall comply with 238.2.

238.2.1 Teeing Grounds. Where one teeing ground is provided for a hole, the teeing ground shall be designed and constructed so that a golf car can enter and exit the teeing ground. Where two teeing grounds are provided for a hole, the forward teeing ground shall be designed and constructed so that a golf car can enter and exit the teeing ground. Where three or more teeing grounds are provided for a hole, at least two teeing grounds, including the forward teeing ground, shall be designed and constructed so that a golf car can enter and exit each teeing ground.

EXCEPTION: In existing golf courses, the forward teeing ground shall not be required to be one of the teeing grounds on a hole designed and constructed so that a golf car can enter and exit the teeing ground where compliance is not feasible due to terrain.

238.2.2 Putting Greens. Putting greens shall be designed and constructed so that a golf car can enter and exit the putting green.

238.2.3 Weather Shelters. Where provided, weather shelters shall be designed and constructed so that a golf car can enter and exit the weather shelter and shall comply with 1006.4.

238.3 Practice Putting Greens, Practice Teeing Grounds, and Teeing Stations at Driving Ranges. At least 5 percent, but no fewer than one, of practice putting greens, practice teeing grounds, and teeing stations at driving ranges shall be designed and constructed so that a golf car can enter and exit the practice putting greens, practice teeing grounds, and teeing stations at driving ranges.

239 Miniature Golf Facilities

239.1 General. Miniature golf facilities shall comply with 239.

239.2 Minimum Number. At least 50 percent of holes on miniature golf courses shall comply with 1007.3.

239.3 Miniature Golf Course Configuration. Miniature golf courses shall be configured so that the holes complying with 1007.3 are consecutive. Miniature golf courses shall provide an accessible route from the last hole complying with 1007.3 to the course entrance or exit without requiring travel through any other holes on the course.

EXCEPTION: One break in the sequence of consecutive holes shall be permitted provided that the last hole on the miniature golf course is the last hole in the sequence.

240 PLAY AREAS

240.1 General. Play areas for children ages 2 and over shall comply with 240. Where separate play areas are provided within a site for specific age groups, each play area shall comply with 240.

EXCEPTIONS: 1. Play areas located in family child care facilities where the proprietor actually resides shall not be required to comply with 240.

2. In existing play areas, where play components are relocated for the purposes of creating safe use zones and the ground surface is not altered or extended for more than one use zone, the play area shall not be required to comply with 240.

3. Amusement attractions shall not be required to comply with 240.

4. Where play components are altered and the ground surface is not altered, the ground surface shall not be required to comply with 1008.2.6 unless required by 202.4.

240.1.1 Additions. Where play areas are designed and constructed in phases, the requirements of 240 shall apply to each successive addition so that when the addition is completed, the entire play area complies with all the applicable requirements of 240.

240.2 Play Components. Where provided, play components shall comply with 240.2.

240.2.1 Ground Level Play Components. Ground level play components shall be provided in the number and types required by 240.2.1. Ground level play components that are provided to comply with 240.2.1.1 shall be permitted to satisfy the additional number required by 240.2.1.2 if the minimum required types of play components are satisfied. Where two or more required ground level play components are provided, they shall be dispersed throughout the play area and integrated with other play components.

240.2.1.1 Minimum Number and Types. Where ground level play components are provided, at least one of each type shall be on an accessible route and shall comply with 1008.4.

240.2.1.2 Additional Number and Types. Where elevated play components are provided, ground level play components shall be provided in accordance with Table 240.2.1.2 and shall comply with 1008.4.

EXCEPTION: If at least 50 percent of the elevated play components are connected by a ramp and at least 3 of the elevated play components connected by the ramp are different types of play components, the play area shall not be required to comply with 240.2.1.2.

TABLE 240.2.1.2—NUMBER AND TYPES OF GROUND LEVEL PLAY COMPONENTS REQUIRED TO BE ON ACCESSIBLE ROUTES

Number of elevated play components provided	Minimum number of ground level play components required to be on an accessible route	Minimum number of different types of ground level play components required to be on an accessible route
1	Not applicable	Not applicable.
2 to 4	1	1.
5 to 7	2	2.
8 to 10	3	3.
11 to 13	4	3.
14 to 16	5	3.
17 to 19	6	3.
20 to 22	7	4.
23 to 25	8	4.
26 and over	8, plus 1 for each additional 3, or fraction thereof, over 25.	5.

240.2.2 Elevated Play Components. Where elevated play components are provided, at least 50 percent shall be on an accessible route and shall comply with 1008.4.

241 SAUNAS AND STEAM ROOMS

241.1 General. Where provided, saunas and steam rooms shall comply with 612.

EXCEPTION: Where saunas or steam rooms are clustered at a single location, no more than 5 percent of the saunas and steam rooms, but no fewer than one, of each type in each cluster shall be required to comply with 612.

242 SWIMMING POOLS, WADING POOLS, AND SPAS

242.1 General. Swimming pools, wading pools, and spas shall comply with 242.

242.2 Swimming Pools. At least two accessible means of entry shall be provided for swimming pools. Accessible means of entry shall be swimming pool lifts complying with 1009.2; sloped entries complying with 1009.3; transfer walls complying with 1009.4; transfer systems complying with 1009.5; and pool stairs complying with 1009.6. At least one accessible means of entry provided shall comply with 1009.2 or 1009.3.

EXCEPTIONS: 1. Where a swimming pool has less than 300 linear feet (91 m) of swimming

pool wall, no more than one accessible means of entry shall be required provided that the accessible means of entry is a swimming pool lift complying with 1009.2 or sloped entry complying with 1009.3.

2. Wave action pools, leisure rivers, sand bottom pools, and other pools where user access is limited to one area shall not be required to provide more than one accessible means of entry provided that the accessible means of entry is a swimming pool lift complying with 1009.2, a sloped entry complying with 1009.3, or a transfer system complying with 1009.5.

3. Catch pools shall not be required to provide an accessible means of entry provided that the catch pool edge is on an accessible route.

242.3 Wading Pools. At least one accessible means of entry shall be provided for wading pools. Accessible means of entry shall comply with sloped entries complying with 1009.3.

242.4 Spas. At least one accessible means of entry shall be provided for spas. Accessible means of entry shall comply with swimming pool lifts complying with 1009.2; transfer walls complying with 1009.4; or transfer systems complying with 1009.5.

EXCEPTION: Where spas are provided in a cluster, no more than 5 percent, but no fewer than one, spa in each cluster shall be required to comply with 242.4.

243 SHOOTING FACILITIES WITH FIRING POSITIONS

243.1 General. Where shooting facilities with firing positions are designed and constructed at a site, at least 5 percent, but no fewer than one, of each type of firing position shall comply with 1010.

[78 FR 59495, Sept. 26, 2013, as amended at 78 FR 67303, Nov. 12, 2013; 79 FR 26138, May 7, 2014; 79 FR 57804, Sept. 26, 2014]

APPENDIX C TO PART 1191—ARCHITECTURAL BARRIERS ACT: SCOPING

ABA CHAPTER 1: APPLICATION AND ADMINISTRATION

F101 PURPOSE

F101.1 General. This document contains scoping and technical requirements for accessibility to sites, facilities, buildings, and elements by individuals with disabilities. The requirements are to be applied during the design, construction, addition to, alteration, and lease of sites, facilities, buildings, and elements to the extent required by regulations issued by Federal agencies under the Architectural Barriers Act of 1968 (ABA).

F102 DIMENSIONS FOR ADULTS AND CHILDREN

F102.1 General. The technical requirements are based on adult dimensions and anthropometrics. In addition, this document includes technical requirements based on children's dimensions and anthropometrics for drinking fountains, water closets, toilet compartments, lavatories and sinks, dining surfaces, and work surfaces.

F103 MODIFICATIONS AND WAIVERS

F103.1 General. The Architectural Barriers Act authorizes the Administrator of the General Services Administration, the Secretary of the Department of Housing and Urban Development, the Secretary of the Department of Defense, and the United States Postal Service to modify or waive the accessibility standards for buildings and facilities covered by the Architectural Barriers Act on a case-by-case basis, upon application made by the head of the department, agency, or instrumentality of the United States concerned. The General Services Administration, the Department of Housing and Urban Development, the Department of Defense, and the United States Postal Service may grant a modification or waiver only upon a determination that it is clearly necessary. Section 502(b)(1) of the Rehabilitation Act of 1973 authorizes the Access Board to ensure that modifications and waivers are based on findings of fact and are not inconsistent with the Architectural Barriers Act.

F104 CONVENTIONS

F104.1 Dimensions. Dimensions that are not stated as ''maximum'' or ''minimum'' are absolute.

F104.1.1 Construction and Manufacturing Tolerances. All dimensions are subject to conventional industry tolerances except where the requirement is stated as a range with specific minimum and maximum end points.

F104.2 Calculation of Percentages. Where the required number of elements or facilities to be provided is determined by calculations of ratios or percentages and remainders or fractions result, the next greater whole number of such elements or facilities shall be provided. Where the determination of the required size or dimension of an element or facility involves ratios or percentages, rounding down for values less than one half shall be permitted.

F105 REFERENCED STANDARDS

F105.1 General. The standards listed in F105.2 are incorporated by reference in this document and are part of the requirements to the prescribed extent of each such reference. The Director of the Federal Register has approved these standards for incorporation by reference in accordance with 5 U.S.C. 552(a) and 1 CFR part 51. Copies of the referenced standards may be inspected at the Architectural and Transportation Barriers Compliance Board, 1331 F Street NW., Suite

1000, Washington, DC 20004; at the Department of Justice, Civil Rights Division, Disability Rights Section, 1425 New York Avenue NW., Washington, DC 20005; at the Department of Transportation, 1200 New Jersey Avenue SE., Washington, DC 20590; or at the National Archives and Records Administration (NARA). For information on the availability of this material at NARA, call (202) 741–6030, or go to *http://www.archives.gov/federal_register/code_of_federal_regulations/ibr_locations.html*.

F105.2 Referenced Standards. The specific edition of the standards listed below are referenced in this document. Where differences occur between this document and the referenced standards, this document applies.

F105.2.1 ANSI/BHMA. Copies of the referenced standards may be obtained from the Builders Hardware Manufacturers Association, 355 Lexington Avenue, 15th floor, New York, NY 10017 (*http://www.buildershardware.com*).

ANSI/BHMA A156.10–1999 American National Standard for Power Operated Pedestrian Doors (see 404.3).

ANSI/BHMA A156.19–1997 American National Standard for Power Assist and Low Energy Power Operated Doors (see 404.3, 408.3.2.1, and 409.3.1).

ANSI/BHMA A156.19–2002 American National Standard for Power Assist and Low Energy Power Operated Doors (see 404.3, 408.3.2.1, and 409.3.1).

F105.2.2 ASME. Copies of the referenced standards may be obtained from the American Society of Mechanical Engineers, Two Park Avenue, New York, New York 10016 (*http://www.asme.org*).

ASME A17.1–2000 Safety Code for Elevators and Escalators, including ASME A17.1a–2002 Addenda and ASME A17.1b–2003 Addenda (see 407.1, 408.1, 409.1, and 810.9).

ASME A18.1–1999 Safety Standard for Platform Lifts and Stairway Chairlifts, including ASME A18.1a 2001 Addenda and ASME A18.1b–2001 Addenda (see 410.1).

ASME A18.1–2003 Safety Standard for Platform Lifts and Stairway Chairlifts, (see 410.1).

F105.2.3 ASTM. Copies of the referenced standards may be obtained from the American Society for Testing and Materials, 100 Bar Harbor Drive, West Conshohocken, Pennsylvania 19428 (*http://www.astm.org*).

ASTM F1292–99 Standard Specification for Impact Attenuation of Surface Systems Under and Around Playground Equipment (see 1008.2.6.2).

ASTM F1292–04 Standard Specification for Impact Attenuation of Surfacing Materials Within the Use Zone of Playground Equipment (see 1008.2.6.2).

ASTM F1487–01 Standard Consumer Safety Performance Specification for Playground Equipment for Public Use (see F106.5).

ASTM F1951–99 Standard Specification for Determination of Accessibility of Surface Systems Under and Around Playground Equipment (see 1008.2.6.1).

F105.2.4 ICC/IBC. Copies of the referenced standard may be obtained from the International Code Council, 500 New Jersey Avenue NW., Washington, DC 20001 (*www.iccsafe.org*).

International Building Code, 2000 Edition (see F207.1, F207.2, F216.4.2, F216.4.3, and 1005.2.1).

International Building Code, 2001 Supplement (see F207.1 and F207.2).

International Building Code, 2003 Edition (see F207.1, F207.2, F216.4.2, F216.4.3, and 1005.2.1).

F105.2.5 NFPA. Copies of the referenced standards may be obtained from the National Fire Protection Association, 1 Batterymarch Park, Quincy, Massachusetts 02169–7471, (*http://www.nfpa.org*).

NFPA 72 National Fire Alarm Code, 1999 Edition (see 702.1, 809.3.1.1, and 809.3.1.2).

NFPA 72 National Fire Alarm Code, 2002 Edition (see 702.1, 809.3.1.1, and 809.3.1.2).

F106 DEFINITIONS

F106.1 General. For the purpose of this document, the terms defined in F106.5 have the indicated meaning.

F106.2 Terms Defined in Referenced Standard. Terms not defined in F106.5 or in regulations issued by the Administrator of the General Services Administration, the Secretary of Defense, the Secretary of Housing and Urban Development, or the United States Postal Service to implement the Architectural Barriers Act but specifically defined in a referenced standard, shall have the specified meaning from the referenced standard unless otherwise stated.

F106.3 Undefined Terms. The meaning of terms not specifically defined in F106.5 or in regulations issued by the Administrator of the General Services Administration, the Secretary of Defense, the Secretary of Housing and Urban Development, or the United States Postal Service to implement the Architectural Barriers Act or in referenced standards shall be as defined by collegiate dictionaries in the sense that the context implies.

F106.4 Interchangeability. Words, terms and phrases used in the singular include the plural and those used in the plural include the singular.

F106.5 Defined Terms.

Accessible. A site, building, facility, or portion thereof that complies with this part.

Accessible Means of Egress. A continuous and unobstructed way of egress travel from any point in a building or facility that provides an accessible route to an area of refuge, a horizontal exit, or a public way.

Addition. An expansion, extension, or increase in the gross floor area or height of a building or facility.

Administrative Authority. A governmental agency that adopts or enforces regulations and guidelines for the design, construction, or alteration of buildings and facilities.

Alteration. A change to a building or facility that affects or could affect the usability of the building or facility or portion thereof. Alterations include, but are not limited to, remodeling, renovation, rehabilitation, reconstruction, historic restoration, resurfacing of circulation paths or vehicular ways, changes or rearrangement of the structural parts or elements, and changes or rearrangement in the plan configuration of walls and full-height partitions. Normal maintenance, reroofing, painting or wallpapering, or changes to mechanical and electrical systems are not alterations unless they affect the usability of the building or facility.

Amusement Attraction. Any facility, or portion of a facility, located within an amusement park or theme park which provides amusement without the use of an amusement device. Amusement attractions include, but are not limited to, fun houses, barrels, and other attractions without seats.

Amusement Ride. A system that moves persons through a fixed course within a defined area for the purpose of amusement.

Amusement Ride Seat. A seat that is built-in or mechanically fastened to an amusement ride intended to be occupied by one or more passengers.

Area of Sport Activity. That portion of a room or space where the play or practice of a sport occurs.

Assembly Area. A building or facility, or portion thereof, used for the purpose of entertainment, worship, educational or civic gatherings, or similar purposes. For the purposes of these requirements, assembly areas include, but are not limited to, classrooms, lecture halls, courtrooms, public meeting rooms, public hearing rooms, legislative chambers, motion picture houses, auditoria, theaters, playhouses, dinner theaters, concert halls, centers for the performing arts, amphitheaters, arenas, stadiums, grandstands, or convention centers.

Assistive Listening System (ALS). An amplification system utilizing transmitters, receivers, and coupling devices to bypass the acoustical space between a sound source and a listener by means of induction loop, radio frequency, infrared, or direct-wired equipment.

Boarding Pier. A portion of a pier where a boat is temporarily secured for the purpose of embarking or disembarking.

Boards. Boards include, but are not limited to, wood, plastic, metal, and composite products.

Boat Launch Ramp. A sloped surface designed for launching and retrieving trailered boats and other water craft to and from a body of water.

Boat Slip. That portion of a pier, main pier, finger pier, or float where a boat is moored for the purpose of berthing, embarking, or disembarking.

Building. Any structure used or intended for supporting or sheltering any use or occupancy.

Camp Shelter. A partially enclosed structure that provides campers and hikers cover from weather and that does not contain plumbing fixtures or kitchen appliances. Camp shelters are not transient lodging facilities or residential dwelling units.

Camping Facility. A site, or portion of a site, developed for outdoor recreational purposes that contains camping units.

Camping Unit. An outdoor space in a camping facility used for camping that contains outdoor constructed features, parking spaces for recreational vehicles or other vehicles, tent pads or tent platforms, or camp shelters.

Catch Pool. A pool or designated section of a pool used as a terminus for water slide flumes.

Characters. Letters, numbers, punctuation marks and typographic symbols.

Children's Use. Describes spaces and elements specifically designed for use primarily by people 12 years old and younger.

Circulation Path. An exterior or interior way of passage provided for pedestrian travel, including but not limited to, walks, hallways, courtyards, elevators, platform lifts, ramps, stairways, and landings.

Closed-Circuit Telephone. A telephone with a dedicated line such as a house phone, courtesy phone or phone that must be used to gain entry to a facility.

Common Use. Interior or exterior circulation paths, rooms, spaces, or elements that are not for public use and are made available for the shared use of two or more people.

Cross Slope. The slope that is perpendicular to the direction of travel (see running slope).

Curb Ramp. A short ramp cutting through a curb or built up to it.

Detectable Warning. A standardized surface feature built in or applied to walking surfaces or other elements to warn of hazards on a circulation path.

Element. An architectural or mechanical component of a building, facility, space, or site.

Elevated Play Component. A play component that is approached above or below grade and that is part of a composite play structure consisting of two or more play components attached or functionally linked to create an integrated unit providing more than one play activity.

Emergency Transportable Housing Unit. A single or multiple section prefabricated structure that is transportable by a single

transport vehicle and that can be set-up and installed on a temporary site in response to an emergency need for temporary housing. Such structures include, but are not limited to, travel trailers, park models, manufactured housing, and other factory-built housing. For the purposes of this document, emergency transportable housing units are considered a type of residential dwelling unit.

Employee Work Area. All or any portion of a space used only by employees and used only for work. Corridors, toilet rooms, kitchenettes and break rooms are not employee work areas.

Entrance. Any access point to a building or portion of a building or facility used for the purpose of entering. An entrance includes the approach walk, the vertical access leading to the entrance platform, the entrance platform itself, vestibule if provided, the entry door or gate, and the hardware of the entry door or gate.

Facility. All or any portion of buildings, structures, site improvements, elements, and pedestrian routes or vehicular ways located on a site.

Gangway. A variable-sloped pedestrian walkway that links a fixed structure or land with a floating structure. Gangways that connect to vessels are not addressed by this document.

Golf Car Passage. A continuous passage on which a motorized golf car can operate.

Ground Level Play Component. A play component that is approached and exited at the ground level.

Joint Use. Interior or exterior rooms, spaces, or elements that are common space available for use by all occupants of the building. Joint use does not include mechanical or custodial rooms, or areas occupied by other tenants.

Lease. Any agreement which establishes the relationship of landlord and tenant.

Mail Boxes. Receptacles for the receipt of documents, packages, or other deliverable matter. Mail boxes include, but are not limited to, post office boxes and receptacles provided by commercial mail-receiving agencies, apartment facilities, or schools.

Marked Crossing. A crosswalk or other identified path intended for pedestrian use in crossing a vehicular way.

Mezzanine. An intermediate level or levels between the floor and ceiling of any story with an aggregate floor area of not more than one-third of the area of the room or space in which the level or levels are located. Mezzanines have sufficient elevation that space for human occupancy can be provided on the floor below.

Military Installation. A base, camp, post, station, yard, center, homeport facility for any ship, or other activity or operation under the jurisdiction of the Department of Defense, including any leased facility. Military installation does not include any facility used primarily for civil works, rivers and harbors projects, or flood control projects. Multiple, contiguous, or collocated bases, camps, posts, stations, yards, centers, or home ports shall not be considered as constituting a single military installation.

Occupant Load. The number of persons for which the means of egress of a building or portion of a building is designed.

Operable Part. A component of an element used to insert or withdraw objects, or to activate, deactivate, or adjust the element.

Outdoor Constructed Features. Picnic tables, fire rings, grills, fireplaces, wood stoves, trash and recycling receptacles, water hydrants, utility and sewage hookups, outdoor rinsing showers, benches, and viewing scopes provided at outdoor recreation facilities.

Picnic Facility. A site, or portion of a site, developed for outdoor recreational purposes that contains picnic units.

Picnic Unit. An outdoor space in a picnic facility used for picnicking that contains outdoor constructed features.

Pictogram. A pictorial symbol that represents activities, facilities, or concepts.

Play Area. A portion of a site containing play components designed and constructed for children.

Play Component. An element intended to generate specific opportunities for play, socialization, or learning. Play components are manufactured or natural; and are stand-alone or part of a composite play structure.

Public Entrance. An entrance that is not a service entrance or a restricted entrance.

Public Use. Interior or exterior rooms, spaces, or elements that are made available to the public. Public use may be provided at a building or facility that is privately or publicly owned.

Public Way. Any street, alley or other parcel of land open to the outside air leading to a public street, which has been deeded, dedicated or otherwise permanently appropriated to the public for public use, and which has a clear width and height of not less than 10 feet (3050 mm).

Qualified Historic Building or Facility. A building or facility that is listed in or eligible for listing in the National Register of Historic Places, or designated as historic under an appropriate State or local law.

Ramp. A walking surface that has a running slope steeper than 1:20.

Residential Dwelling Unit. A unit intended to be used as a residence, that is primarily long-term in nature. Residential dwelling units do not include transient lodging, inpatient medical care, licensed long-term care, and detention or correctional facilities.

Restricted Entrance. An entrance that is made available for common use on a controlled basis but not public use and that is not a service entrance.

Running Slope. The slope that is parallel to the direction of travel (see cross slope).

Self-Service Storage. Building or facility designed and used for the purpose of renting or leasing individual storage spaces to customers for the purpose of storing and removing personal property on a self-service basis.

Service Entrance. An entrance intended primarily for delivery of goods or services.

Site. A parcel of land bounded by a property line or a designated portion of a public right-of-way.

Soft Contained Play Structure. A play structure made up of one or more play components where the user enters a fully enclosed play environment that utilizes pliable materials, such as plastic, netting, or fabric.

Space. A definable area, such as a room, toilet room, hall, assembly area, entrance, storage room, alcove, courtyard, or lobby.

Story. That portion of a building or facility designed for human occupancy included between the upper surface of a floor and upper surface of the floor or roof next above. A story containing one or more mezzanines has more than one floor level.

Structural Frame. The columns and the girders, beams, and trusses having direct connections to the columns and all other members that are essential to the stability of the building or facility as a whole.

Tactile. An object that can be perceived using the sense of touch.

Technically Infeasible. With respect to an alteration of a building or a facility, something that has little likelihood of being accomplished because existing structural conditions would require removing or altering a loadbearing member that is an essential part of the structural frame; or because other existing physical or site constraints prohibit modification or addition of elements, spaces, or features that are in full and strict compliance with the minimum requirements.

Teeing Ground. In golf, the starting place for the hole to be played.

Trail. A pedestrian route developed primarily for outdoor recreational purposes. A pedestrian route developed primarily to connect elements, spaces, or facilities within a site is not a trail.

Trailhead. An outdoor space that is designated by an entity responsible for administering or maintaining a trail to serve as an access point to the trail. The junction of two or more trails or the undeveloped junction of a trail and a road is not a trailhead.

Transfer Device. Equipment designed to facilitate the transfer of a person from a wheelchair or other mobility aid to and from an amusement ride seat.

Transient Lodging. A building or facility containing one or more guest room(s) for sleeping that provides accommodations that are primarily short-term in nature. Transient lodging does not include residential dwelling units intended to be used as a residence, inpatient medical care facilities, licensed long-term care facilities, detention or correctional facilities, or private buildings or facilities that contain not more than five rooms for rent or hire and that are actually occupied by the proprietor as the residence of such proprietor.

Transition Plate. A sloping pedestrian walking surface located at the end(s) of a gangway.

TTY. An abbreviation for teletypewriter. Machinery that employs interactive text-based communication through the transmission of coded signals across the telephone network. TTYs may include, for example, devices known as TDDs (telecommunication display devices or telecommunication devices for deaf persons) or computers with special modems. TTYs are also called text telephones.

Use Zone. The ground level area beneath and immediately adjacent to a play structure or play equipment that is designated by ASTM F 1487 (incorporated by reference, see ''Referenced Standards'' in Chapter 1) for unrestricted circulation around the play equipment and where it is predicted that a user would land when falling from or exiting the play equipment.

Vehicular Way. A route provided for vehicular traffic, such as in a street, driveway, or parking facility.

Viewing Area. An outdoor space developed for viewing landscapes, wildlife, or other points of interest.

Walk. An exterior prepared surface for pedestrian use, including pedestrian areas such as plazas and courts.

Wheelchair Space. Space for a single wheelchair and its occupant.

Work Area Equipment. Any machine, instrument, engine, motor, pump, conveyor, or other apparatus used to perform work. As used in this document, this term shall apply only to equipment that is permanently installed or built-in in employee work areas subject to the Americans with Disabilities Act of 1990 (ADA). Work area equipment does not include passenger elevators and other accessible means of vertical transportation.

ABA CHAPTER 2: SCOPING REQUIREMENTS

F201 APPLICATION

F201.1 Scope. All areas of newly designed and newly constructed buildings and facilities and altered or leased portions of existing buildings and facilities shall comply with these requirements.

F201.2 Application Based on Building or Facility Use. Where a site, building, facility, room, or space contains more than one use, each portion shall comply with the applicable requirements for that use.

F201.3 Temporary and Permanent Structures. These requirements shall apply to

temporary and permanent buildings and facilities.

F201.4 Requirements Apply to Facilities Constructed or Altered by or on Behalf of Federal Agencies. The requirements in F216.13, F244 through F248, and 1011 through 1019 shall apply only to facilities constructed or altered by federal agencies or by non-federal entities on federal land on behalf of federal agencies pursuant to a concession contract, partnership agreement, or similar arrangement.

F201.4.1 Documentation and Notification When Exceptions Used for Trails and Beach Access Routes. Federal agencies shall document the basis for not fully complying with a specific provision in 1017 or 1018 on a portion of a trail or beach access route based on Exception 1 in 1017 or Exception 1 in 1018, and shall maintain the documentation with the records for the trail or beach project. Federal agencies shall notify the Access Board if an entire trail is exempted from complying with 1017 based on Exception 2 in 1017.1, and if a beach access route is not provided based on Exception 2 in 1018.1.

F202 EXISTING BUILDINGS AND FACILITIES

F202.1 General. Additions and alterations to existing buildings or facilities, including leased buildings or facilities, shall comply with F202.

F202.2 Additions. Each addition to an existing building or facility shall comply with the requirements for new construction.

F202.2.1 Accessible Route. At least one accessible route shall be provided within the site from accessible parking spaces and accessible passenger loading zones; public streets and sidewalks; and public transportation stops to an accessible entrance serving the addition. If the only accessible entrances serving the addition are provided in the existing building or facility, the accessible route shall connect at least one existing entrance to all accessible spaces and elements within the addition. In addition, elements and spaces specified in F202.2.2 through F202.2.5 shall be on an accessible route.

F202.2.2 Entrance. Where an entrance is not provided in an addition, at least one entrance in the existing building or facility shall comply with F206.4 and shall serve the addition.

F202.2.3 Toilet and Bathing Facilities. Where toilet facilities and bathing facilities are not provided in an addition but are provided in the existing building or facility to serve the addition, the toilet facilities and bathing facilities shall comply with F202.2.3.

EXCEPTION: In alterations to areas serving additions where it is technically infeasible to comply with 603, altering existing toilet or bathing rooms is not required where a single unisex toilet room or bathing room complying with F213.2.1 is provided to serve the addition.

F202.2.3.1 Existing Toilet Facility. Where existing toilet facilities are provided in the existing building or facility, at least one toilet facility for men and at least one toilet facility for women shall comply with F213.2 and F213.3 and shall serve the addition.

EXCEPTION: Where only one toilet facility is provided in the existing building or facility, one toilet facility shall comply with F213.2 and F213.3 and shall serve the addition.

F202.2.3.2 Existing Bathing Facility. Where existing bathing facilities are provided in the existing building or facility, at least one bathing facility for men and at least one bathing facility for women shall comply with F213.2 and F213.3 and shall serve the addition.

EXCEPTION: Where only one bathing facility is provided in the existing building or facility, one bathing facility shall comply with F213.2 and F213.3 and shall serve the addition.

F202.2.4 Public Telephone. Where a public telephone is not provided in an addition but is provided in the existing building or facility to serve the addition, at least one public telephone in the existing building or facility shall comply with F217.

F202.2.5 Drinking Fountain. Where a drinking fountain is not provided in an addition but is provided in the existing building or facility to serve the addition, at least one drinking fountain in the existing building or facility shall comply with 602.1 through 602.6.

F202.3 Alterations. Where existing elements or spaces are altered, each altered element or space shall comply with the applicable requirements of Chapter 2.

EXCEPTIONS: 1. Unless required by F202.4, where elements or spaces are altered and the circulation path to the altered element or space is not altered, an accessible route shall not be required.

2. In alterations, where compliance with applicable requirements is technically infeasible, the alteration shall comply with the requirements to the maximum extent feasible.

3. Residential dwelling units not required to be accessible in compliance with a standard issued pursuant to the Architectural Barriers Act or Section 504 of the Rehabilitation Act of 1973, as amended, shall not be required to comply with F202.3.

4. Where elements or spaces are altered in camping facilities, picnic facilities, viewing areas, or trailheads and the circulation path to the altered element or space is not altered, the circulation path shall not be required to comply with 1016.

F202.3.1 Prohibited Reduction in Access. An alteration that decreases or has the effect of decreasing the accessibility of a building or facility below the requirements

for new construction at the time of the alteration is prohibited.

F202.3.2 Extent of Application. An alteration of an existing element, space, or area of a building or facility shall not impose a requirement for accessibility greater than required for new construction.

F202.4 Alterations Affecting Primary Function Areas. In addition to the requirements of F202.3, an alteration that affects or could affect the usability of or access to an area containing a primary function shall be made so as to ensure that, to the maximum extent feasible, the path of travel to the altered area, including the rest rooms, telephones, and drinking fountains serving the altered area, are readily accessible to and usable by individuals with disabilities, unless such alterations are disproportionate to the overall alterations in terms of cost and scope as determined under criteria established by the Administrator of the General Services Administration, the Secretary of Defense, the Secretary of Housing and Urban Development, or the United States Postal Service.

EXCEPTIONS: 1. Residential dwelling units shall not be required to comply with F202.4.

2. Camping facilities, picnic facilities, viewing areas, trailheads, trails, and beach access routes shall not be required to comply with F202.4.

F202.5 Alterations to Qualified Historic Buildings and Facilities. Alterations to a qualified historic building or facility shall comply with F202.3 and F202.4.

EXCEPTION: Where the State Historic Preservation Officer or Advisory Council on Historic Preservation determines that compliance with the requirements for accessible routes, entrances, or toilet facilities would threaten or destroy the historic significance of the building or facility, the exceptions for alterations to qualified historic buildings or facilities for that element shall be permitted to apply.

F202.6 Leases. Buildings or facilities for which new leases are negotiated by the Federal government after the effective date of the revised standards issued pursuant to the Architectural Barriers Act, including new leases for buildings or facilities previously occupied by the Federal government, shall comply with F202.6.

EXCEPTIONS: 1. Buildings or facilities leased for use by officials servicing disasters on a temporary, emergency basis shall not be required to comply with F202.6.

2. Buildings or facilities leased for 12 months or less shall not be required to comply with F202.6 provided that the lease may not be extended or renewed.

F202.6.1 Joint Use Areas. Joint use areas serving the leased space shall comply with F202.6.

EXCEPTION: Alterations and additions to joint use areas serving the leased space shall not be required to comply with F202.2, F202.3, and F202.5 provided that the alterations are not undertaken by or on behalf of the Federal government.

F202.6.2 Accessible Route. Primary function areas, as defined by Administrator of the General Services Administration, the Secretary of Defense, the Secretary of Housing and Urban Development, and the United States Postal Service, shall be served by at least one accessible route complying with F206. Elements and spaces required to be accessible by F202.6 shall be on an accessible route complying with F206.

EXCEPTION: Fire alarms required by F202.6.5.2 and assistive listening systems required by F202.6.5.5 shall not be required to be on an accessible route.

F202.6.3 Toilet and Bathing Facilities. Where provided, toilet facilities and bathing facilities shall comply with F202.6.3.

F202.6.3.1 Multiple Facilities. At least one toilet facility or bathing facility for each sex on each floor that has toilet facilities or bathing facilities shall comply with F213.2 and F213.3.

F202.6.3.2 Single Facilities. Where only one toilet or bathing facility is provided in a building or facility for each sex, either one unisex toilet or bathing facility, or one toilet or bathing facility for each sex, shall comply with F213.2 and F213.3.

F202.6.4 Parking. Parking shall comply with F208.

F202.6.5 Other Elements and Spaces. Where provided, the following elements and spaces shall comply with F202.6.5.

F202.6.5.1 Drinking Fountains. Drinking fountains shall comply with F211.

F202.6.5.2 Fire Alarms. Fire alarms shall comply with F215.

EXCEPTION: Fire alarms shall not be required to comply with 702 where existing power sources must be upgraded to meet the requirement.

F202.6.5.3 Public Telephones. Public telephones shall comply with F217.

F202.6.5.4 Dining Surfaces and Work Surfaces. Dining surfaces and work surfaces shall comply with F226.

F202.6.5.5 Assembly Areas. Assistive listening systems shall comply with F219 and assembly seating shall comply with F221.

F202.6.5.6 Sales and Service Counters. Sales and service counters shall comply with F227.

F202.6.5.7 Depositories, Vending Machines, Change Machines, and Mail Boxes. Depositories, vending machines, change machines, and mail boxes shall comply with F228.

F202.6.5.8 Residential Dwelling Units. Residential dwelling units, other than emergency transportable housing units, shall comply with F233.

F202.6.5.9 Emergency Transportable Housing Units with Mobility Features. Where emergency transportable housing units are

installed on existing commercial sites, entities shall provide emergency transportable housing units with mobility features complying with 809.2 as determined by a needs assessment conducted by the entity providing the emergency transportable housing units.

F202.6.5.10 Emergency Transportable Housing Units with Communication Features. Where emergency transportable housing units are installed on existing commercial sites, entities shall provide emergency transportable housing units with residential dwelling unit smoke alarms complying with 809.3.1 and, where weather alert systems are provided, with weather alert systems complying with 809.3.4 as determined by a needs assessment conducted by the entity providing the emergency transportable housing units.

F203 GENERAL EXCEPTIONS

F203.1 General. Sites, buildings, facilities, and elements are exempt from these requirements to the extent specified by F203.

F203.2 Existing Elements. Elements in compliance with an earlier standard issued pursuant to the Architectural Barriers Act or Section 504 of the Rehabilitation Act of 1973, as amended shall not be required to comply with these requirements unless altered.

F203.3 Construction Sites. Structures and sites directly associated with the actual processes of construction, including but not limited to, scaffolding, bridging, materials hoists, materials storage, and construction trailers shall not be required to comply with these requirements or to be on an accessible route. Portable toilet units provided for use exclusively by construction personnel on a construction site shall not be required to comply with F213 or to be on an accessible route.

F203.4 Raised Areas. Areas raised primarily for purposes of security, life safety, or fire safety, including but not limited to, observation or lookout galleries, prison guard towers, fire towers, or life guard stands shall not be required to comply with these requirements or to be on an accessible route.

F203.5 Limited Access Spaces. Spaces accessed only by ladders, catwalks, crawl spaces, or very narrow passageways shall not be required to comply with these requirements or to be on an accessible route.

F203.6 Machinery Spaces. Spaces frequented only by service personnel for maintenance, repair, or occasional monitoring of equipment shall not be required to comply with these requirements or to be on an accessible route. Machinery spaces include, but are not limited to, elevator pits or elevator penthouses; mechanical, electrical or communications equipment rooms; piping or equipment catwalks; water or sewage treatment pump rooms and stations; electric substations and transformer vaults; and highway and tunnel utility facilities.

F203.7 Single Occupant Structures. Single occupant structures accessed only by passageways below grade or elevated above standard curb height, including but not limited to, toll booths that are accessed only by underground tunnels, shall not be required to comply with these requirements or to be on an accessible route.

F203.8 Detention and Correctional Facilities. In detention and correctional facilities, common use areas that are used only by inmates or detainees and security personnel and that do not serve holding cells or housing cells required to comply with F232, shall not be required to comply with these requirements or to be on an accessible route.

F203.9 Residential Facilities. In facilities with residential dwelling units, common use areas that do not serve residential dwelling units required to provide mobility features complying with 809.2 or emergency transportable housing unit pads designed and constructed to accept the installation of units with mobility features complying with 809.2 shall not be required to comply with these requirements or to be on an accessible route.

F203.10 Raised Refereeing, Judging, and Scoring Areas. Raised structures used solely for refereeing, judging, or scoring a sport shall not be required to comply with these requirements or to be on an accessible route.

F203.11 Water Slides. Water slides shall not be required to comply with these requirements or to be on an accessible route.

F203.12 Animal Containment Areas. Animal containment areas that are not for public use shall not be required to comply with these requirements or to be on an accessible route.

F203.13 Raised Boxing or Wrestling Rings. Raised boxing or wrestling rings shall not be required to comply with these requirements or to be on an accessible route.

F203.14 Raised Diving Boards and Diving Platforms. Raised diving boards and diving platforms shall not be required to comply with these requirements or to be on an accessible route.

F204 PROTRUDING OBJECTS

F204.1 General. Protruding objects on circulation paths shall comply with 307.

EXCEPTIONS: 1. Within areas of sport activity, protruding objects on circulation paths shall not be required to comply with 307.

2. Within play areas, protruding objects on circulation paths shall not be required to comply with 307 provided that ground level accessible routes provide vertical clearance in compliance with 1008.2.

F205 OPERABLE PARTS

F205.1 General. Operable parts on accessible elements, accessible routes, and in accessible rooms and spaces shall comply with 309.

EXCEPTIONS: 1. Operable parts that are intended for use only by service or maintenance personnel shall not be required to comply with 309.

2. Electrical or communication receptacles serving a dedicated use shall not be required to comply with 309.

3. Except within emergency transportable housing units required to provide mobility features complying with 809.2, where two or more outlets are provided in a kitchen above a length of counter top that is uninterrupted by a sink or appliance, one outlet shall not be required to comply with 309.

4. Floor electrical receptacles shall not be required to comply with 309.

5. HVAC diffusers shall not be required to comply with 309.

6. Except for light switches, where redundant controls are provided for a single element, one control in each space shall not be required to comply with 309.

7. Cleats and other boat securement devices shall not be required to comply with 309.3.

8. Exercise machines and exercise equipment shall not be required to comply with 309.

9. Operable parts located within residential dwelling units not required to provide mobility features complying with 809.2 and transient lodging guest rooms not required to provide mobility features complying with 806.2 shall not be required to comply with 309.

10. In emergency transportable housing units required to provide mobility features complying with 809.2, operable parts located beneath the unit body shall not be required to comply with 309.

11. Water shut-off valves shall not be required to comply with 309.

F206 ACCESSIBLE ROUTES

F206.1 General. Accessible routes shall be provided in accordance with F206 and shall comply with Chapter 4 except that the exemptions at 403.5, 405.5, and 405.8 shall not apply.

EXCEPTIONS: 1. Accessible routes shall not be required where outdoor recreation access routes are provided at camping facilities in accordance with F244.5, picnic facilities in accordance with F245.4, viewing areas in accordance with F246.3, or trailheads in accordance with F247.3.2.

2. Accessible routes shall not be required where camping facilities, picnic facilities, viewing areas, or outdoor constructed features are provided on trails.

3. Accessible routes shall not be required where beach access routes are provided in accordance with F248.

F206.2 Where Required. Accessible routes shall be provided where required by F206.2.

F206.2.1 Site Arrival Points. At least one accessible route shall be provided within the site from accessible parking spaces and accessible passenger loading zones; public streets and sidewalks; and public transportation stops to the accessible building or facility entrance they serve.

EXCEPTIONS: 1. Where exceptions for alterations to qualified historic buildings or facilities are permitted by F202.5, no more than one accessible route from a site arrival point to an accessible entrance shall be required.

2. An accessible route shall not be required between site arrival points and the building or facility entrance if the only means of access between them is a vehicular way not providing pedestrian access.

F206.2.2 Within a Site. At least one accessible route shall connect accessible buildings, accessible facilities, accessible elements, and accessible spaces that are on the same site.

EXCEPTION: An accessible route shall not be required between accessible buildings, accessible facilities, accessible elements and accessible spaces if the only means of access between them is a vehicular way not providing pedestrian access.

F206.2.3 Multi-Story Buildings and Facilities. At least one accessible route shall connect each story and mezzanine in multistory buildings and facilities.

EXCEPTIONS: 1. Where a two story building or facility has one story with an occupant load of five or fewer persons that does not contain public use space, that story shall not be required to be connected to the story above or below.

2. In detention and correctional facilities, an accessible route shall not be required to connect stories where cells with mobility features required to comply with 807.2, all common use areas serving cells with mobility features required to comply with 807.2, and all public use areas are on an accessible route.

3. In facilities with residential dwelling units, an accessible route shall not be required to connect stories where residential dwelling units with mobility features required to comply with 809.2, all common use areas serving residential dwelling units with mobility features required to comply with 809.2, and public use areas serving residential dwelling units are on an accessible route.

4. Within multi-story transient lodging guest rooms with mobility features required to comply with 806.2, an accessible route shall not be required to connect stories provided that spaces complying with 806.2 are on

an accessible route and sleeping accommodations for two persons minimum are provided on a story served by an accessible route.

5. In air traffic control towers, an accessible route shall not be required to serve the cab and the floor immediately below the cab.

6. Where exceptions for alterations to qualified historic buildings or facilities are permitted by F202.5, an accessible route shall not be required to stories located above or below the accessible story.

F206.2.3.1 Stairs and Escalators in Existing Buildings. In alterations and additions, where an escalator or stair is provided where none existed previously and major structural modifications are necessary for the installation, an accessible route shall be provided between the levels served by the escalator or stair unless exempted by F206.2.3 Exceptions 1 through 6.

F206.2.4 Spaces and Elements. At least one accessible route shall connect accessible building or facility entrances with all accessible spaces and elements within the building or facility which are otherwise connected by a circulation path unless exempted by F206.2.3 Exceptions 1 through 6.

EXCEPTIONS: 1. Raised courtroom stations, including judges' benches, clerks' stations, bailiffs' stations, deputy clerks' stations, and court reporters' stations shall not be required to provide vertical access provided that the required clear floor space, maneuvering space, and, if appropriate, electrical service are installed at the time of initial construction to allow future installation of a means of vertical access complying with 405, 407, 408, or 410 without requiring substantial reconstruction of the space.

2. In assembly areas with fixed seating required to comply with F221, an accessible route shall not be required to serve fixed seating where wheelchair spaces required to be on an accessible route are not provided.

3. Accessible routes shall not be required to connect mezzanines where buildings or facilities have no more than one story. In addition, accessible routes shall not be required to connect stories or mezzanines where multi-story buildings or facilities are exempted by F206.2.3 Exceptions 1 through 6.

F206.2.5 Restaurants and Cafeterias. In restaurants and cafeterias, an accessible route shall be provided to all dining areas, including raised or sunken dining areas, and outdoor dining areas.

EXCEPTIONS: 1. In alterations, an accessible route shall not be required to existing raised or sunken dining areas, or to all parts of existing outdoor dining areas where the same services and decor are provided in an accessible space usable by the public and not restricted to use by people with disabilities.

2. In sports facilities, tiered dining areas providing seating required to comply with F221 shall be required to have accessible routes serving at least 25 percent of the dining area provided that accessible routes serve seating complying with F221 and each tier is provided with the same services.

F206.2.6 Performance Areas. Where a circulation path directly connects a performance area to an assembly seating area, an accessible route shall directly connect the assembly seating area with the performance area. An accessible route shall be provided from performance areas to ancillary areas or facilities used by performers unless exempted by F206.2.3 Exceptions 1 through 6.

F206.2.7 Press Boxes. Press boxes in assembly areas shall be on an accessible route.

EXCEPTIONS: 1. An accessible route shall not be required to press boxes in bleachers that have points of entry at only one level provided that the aggregate area of all press boxes is 500 square feet (46 m2) maximum.

2. An accessible route shall not be required to free-standing press boxes that are elevated above grade 12 feet (3660 mm) minimum provided that the aggregate area of all press boxes is 500 square feet (46 m2) maximum.

F206.2.8 Amusement Rides. Amusement rides required to comply with F234 shall provide accessible routes in accordance with F206.2.8. Accessible routes serving amusement rides shall comply with Chapter 4 except as modified by 1002.2.

F206.2.8.1 Load and Unload Areas. Load and unload areas shall be on an accessible route. Where load and unload areas have more than one loading or unloading position, at least one loading and unloading position shall be on an accessible route.

F206.2.8.2 Wheelchair Spaces, Ride Seats Designed for Transfer, and Transfer Devices. When amusement rides are in the load and unload position, wheelchair spaces complying with 1002.4, amusement ride seats designed for transfer complying with 1002.5, and transfer devices complying with 1002.6 shall be on an accessible route.

F206.2.9 Recreational Boating Facilities. Boat slips required to comply with F235.2 and boarding piers at boat launch ramps required to comply with F235.3 shall be on an accessible route. Accessible routes serving recreational boating facilities shall comply with Chapter 4 except as modified by 1003.2.

F206.2.10 Bowling Lanes. Where bowling lanes are provided, at least 5 percent, but no fewer than one of each type of bowling lane, shall be on an accessible route.

F206.2.11 Court Sports. In court sports, at least one accessible route shall directly connect both sides of the court.

F206.2.12 Exercise Machines and Equipment. Exercise machines and equipment required to comply with F236 shall be on an accessible route.

F206.2.13 Fishing Piers and Platforms. Fishing piers and platforms shall be on an accessible route. Accessible routes serving

fishing piers and platforms shall comply with Chapter 4 except as modified by 1005.1.

F206.2.14 Golf Facilities. At least one accessible route shall connect accessible elements and spaces within the boundary of the golf course. In addition, accessible routes serving golf car rental areas; bag drop areas; course weather shelters complying with F238.2.3; course toilet rooms; and practice putting greens, practice teeing grounds, and teeing stations at driving ranges complying with F238.3 shall comply with Chapter 4 except as modified by 1006.2.

EXCEPTION: Golf car passages complying with 1006.3 shall be permitted to be used for all or part of accessible routes required by F206.2.14.

F206.2.15 Miniature Golf Facilities. Holes required to comply with F239.2, including the start of play, shall be on an accessible route. Accessible routes serving miniature golf facilities shall comply with Chapter 4 except as modified by 1007.2.

F206.2.16 Play Areas. Play areas shall provide accessible routes in accordance with F206.2.16. Accessible routes serving play areas shall comply with Chapter 4 except as modified by 1008.2.

F206.2.16.1 Ground Level and Elevated Play Components. At least one accessible route shall be provided within the play area. The accessible route shall connect ground level play components required to comply with F240.2.1 and elevated play components required to comply with F240.2.2, including entry and exit points of the play components.

F206.2.16.2 Soft Contained Play Structures. Where three or fewer entry points are provided for soft contained play structures, at least one entry point shall be on an accessible route. Where four or more entry points are provided for soft contained play structures, at least two entry points shall be on an accessible route.

F206.3 Location. Accessible routes shall coincide with or be located in the same area as general circulation paths. Where circulation paths are interior, required accessible routes shall also be interior.

F206.4 Entrances. Entrances shall be provided in accordance with F206.4. Entrance doors, doorways, and gates shall comply with 404 and shall be on an accessible route complying with 402.

EXCEPTIONS: 1. Where an alteration includes alterations to an entrance, and the building or facility has another entrance complying with 404 that is on an accessible route, the altered entrance shall not be required to comply with F206.4 unless required by F202.4.

2. Where exceptions for alterations to qualified historic buildings or facilities are permitted by F202.5, no more than one public entrance shall be required to comply with F206.4. Where no public entrance can comply with F206.4 under criteria established in F202.5 Exception, then either an unlocked entrance not used by the public shall comply with F206.4; or a locked entrance complying with F206.4 with a notification system or remote monitoring shall be provided.

F206.4.1 Public Entrances. In addition to entrances required by F206.4.2 through F206.4.9, at least 60 percent of all public entrances shall comply with 404.

F206.4.2 Parking Structure Entrances. Where direct access is provided for pedestrians from a parking structure to a building or facility entrance, each direct access to the building or facility entrance shall comply with 404.

F206.4.3 Entrances from Tunnels or Elevated Walkways. Where direct access is provided for pedestrians from a pedestrian tunnel or elevated walkway to a building or facility, at least one direct entrance to the building or facility from each tunnel or walkway shall comply with 404.

F206.4.4 Transportation Facilities. In addition to the requirements of F206.4.2, F206.4.3, and F206.4.5 through F206.4.9, transportation facilities shall provide entrances in accordance with F206.4.4.

F206.4.4.1 Location. In transportation facilities, where different entrances serve different transportation fixed routes or groups of fixed routes, at least one public entrance serving each fixed route or group of fixed routes shall comply with 404.

F206.4.4.2 Direct Connections. Direct connections to other facilities shall provide an accessible route complying with 404 from the point of connection to boarding platforms and all transportation system elements required to be accessible. Any elements provided to facilitate future direct connections shall be on an accessible route connecting boarding platforms and all transportation system elements required to be accessible.

F206.4.5 Tenant Spaces. At least one accessible entrance to each tenancy in a facility shall comply with 404.

EXCEPTION: Self-service storage facilities not required to comply with F225.3 shall not be required to be on an accessible route.

F206.4.6. Residential Dwelling Unit Primary Entrance. In residential dwelling units required to provide mobility features complying with 809.2, at least one primary entrance shall comply with 404. The primary entrance to a residential dwelling unit shall not be to a bedroom.

F206.4.7 Restricted Entrances. Where restricted entrances are provided to a building or facility, at least one restricted entrance to the building or facility shall comply with 404.

F206.4.8 Service Entrances. If a service entrance is the only entrance to a building or to a tenancy in a facility, that entrance shall comply with 404.

F206.4.9 Entrances for Inmates or Detainees. Where entrances used only by inmates or detainees and security personnel are provided at judicial facilities, detention facilities, or correctional facilities, at least one such entrance shall comply with 404.

F206.5 Doors, Doorways, and Gates. Doors, doorways, and gates providing user passage shall be provided in accordance with F206.5.

F206.5.1 Entrances. Each entrance to a building or facility required to comply with F206.4 shall have at least one door, doorway, or gate complying with 404.

F206.5.2 Rooms and Spaces. Within a building or facility, at least one door, doorway, or gate serving each room or space complying with these requirements shall comply with 404.

F206.5.3 Transient Lodging Facilities. In transient lodging facilities, entrances, doors, and doorways providing user passage into and within guest rooms that are not required to provide mobility features complying with 806.2 shall comply with 404.2.3.

EXCEPTION: Shower and sauna doors in guest rooms that are not required to provide mobility features complying with 806.2 shall not be required to comply with 404.2.3.

F206.5.4 Residential Dwelling Units. In residential dwelling units required to provide mobility features complying with 809.2, all doors and doorways providing user passage shall comply with 404.

F206.6 Elevators. Elevators provided for passengers shall comply with 407. Where multiple elevators are provided, each elevator shall comply with 407.

EXCEPTIONS: 1. In a building or facility permitted to use the exceptions to F206.2.3 or permitted by F206.7 to use a platform lift, elevators complying with 408 shall be permitted.

2. Elevators complying with 408 or 409 shall be permitted in multi-story residential dwelling units.

F206.6.1 Existing Elevators. Where elements of existing elevators are altered, the same element shall also be altered in all elevators that are programmed to respond to the same hall call control as the altered elevator and shall comply with the requirements of 407 for the altered element.

F206.7 Platform Lifts. Platform lifts shall comply with 410. Platform lifts shall be permitted as a component of an accessible route in new construction in accordance with F206.7. Platform lifts shall be permitted as a component of an accessible route in an existing building or facility. In emergency transportable housing units, platform lifts shall not be used at the primary entrance to a unit required to provide mobility features complying with 809.2.

F206.7.1 Performance Areas and Speakers' Platforms. Platform lifts shall be permitted to provide accessible routes to performance areas and speakers' platforms.

F206.7.2 Wheelchair Spaces. Platform lifts shall be permitted to provide an accessible route to comply with the wheelchair space dispersion and line-of-sight requirements of F221 and 802.

F206.7.3 Incidental Spaces. Platform lifts shall be permitted to provide an accessible route to incidental spaces which are not public use spaces and which are occupied by five persons maximum.

F206.7.4 Judicial Spaces. Platform lifts shall be permitted to provide an accessible route to: jury boxes and witness stands; raised courtroom stations including, judges' benches, clerks' stations, bailiffs' stations, deputy clerks' stations, and court reporters' stations; and to depressed areas such as the well of a court.

F206.7.5 Existing Site Constraints. Platform lifts shall be permitted where existing exterior site constraints make use of a ramp or elevator infeasible.

F206.7.6 Guest Rooms and Residential Dwelling Units. Platform lifts shall be permitted to connect levels within transient lodging guest rooms required to provide mobility features complying with 806.2 or residential dwelling units required to provide mobility features complying with 809.2.

F206.7.7 Amusement Rides. Platform lifts shall be permitted to provide accessible routes to load and unload areas serving amusement rides.

F206.7.8 Play Areas. Platform lifts shall be permitted to provide accessible routes to play components or soft contained play structures.

F206.7.9 Team or Player Seating. Platform lifts shall be permitted to provide accessible routes to team or player seating areas serving areas of sport activity.

F206.7.10 Recreational Boating Facilities and Fishing Piers and Platforms. Platform lifts shall be permitted to be used instead of gangways that are part of accessible routes serving recreational boating facilities and fishing piers and platforms.

F206.8 Security Barriers. Security barriers, including but not limited to, security bollards and security check points, shall not obstruct a required accessible route or accessible means of egress.

EXCEPTION: Where security barriers incorporate elements that cannot comply with these requirements such as certain metal detectors, fluoroscopes, or other similar devices, the accessible route shall be permitted to be located adjacent to security screening devices. The accessible route shall permit persons with disabilities passing around security barriers to maintain visual contact with their personal items to the same extent provided others passing through the security barrier.

F207 ACCESSIBLE MEANS OF EGRESS

F207.1 General. Means of egress shall comply with section 1003.2.13 of the International Building Code (2000 edition and 2001 Supplement) or section 1007 of the International Building Code (2003 edition) (incorporated by reference, see ''Referenced Standards'' in Chapter 1).

EXCEPTIONS: 1. Where means of egress are permitted by local building or life safety codes to share a common path of egress travel, accessible means of egress shall be permitted to share a common path of egress travel.

2. Areas of refuge shall not be required in detention and correctional facilities.

F207.2 Platform Lifts. Standby power shall be provided for platform lifts permitted by section 1003.2.13.4 of the International Building Code (2000 edition and 2001 Supplement) or section 1007.5 of the International Building Code (2003 edition) (incorporated by reference, see ''Referenced Standards'' in Chapter 1) to serve as a part of an accessible means of egress.

F208 PARKING SPACES

F208.1 General. Where parking spaces are provided, parking spaces shall be provided in accordance with F208.

EXCEPTION: Parking spaces used exclusively for buses, trucks, other delivery vehicles, law enforcement vehicles, or vehicular impound shall not be required to comply with F208 provided that lots accessed by the public are provided with a passenger loading zone complying with 503.

F208.2 Minimum Number. Parking spaces complying with 502 shall be provided in accordance with Table F208.2 except as required by F208.2.1, F208.2.2, and F208.2.3. Where more than one parking facility is provided on a site, the number of accessible spaces provided on the site shall be calculated according to the number of spaces required for each parking facility.

TABLE F208.2—PARKING SPACES

Total number of parking spaces provided in parking facility	Minimum number of required accessible parking spaces
1 to 25	1.
26 to 50	2.
51 to 75	3.
76 to 100	4.
101 to 150	5.
151 to 200	6.
201 to 300	7.
301 to 400	8.
401 to 500	9.
501 to 1000	2 percent of total.
1001 and over	20, plus 1 for each 100, or fraction thereof, over 1000.

F208.2.1 Hospital Outpatient Facilities. Ten percent of patient and visitor parking spaces provided to serve hospital outpatient facilities shall comply with 502.

F208.2.2 Rehabilitation Facilities and Outpatient Physical Therapy Facilities. Twenty percent of patient and visitor parking spaces provided to serve rehabilitation facilities specializing in treating conditions that affect mobility and outpatient physical therapy facilities shall comply with 502.

F208.2.3 Residential Facilities. Parking spaces provided to serve facilities with residential dwelling units shall comply with F208.2.3.

F208.2.3.1 Parking for Residents. Where at least one parking space is provided for each residential dwelling unit, at least one parking space complying with 502 shall be provided for each residential dwelling unit required to provide mobility features complying with 809.2.

F208.2.3.2 Additional Parking Spaces for Residents. Where the total number of parking spaces provided for each residential dwelling unit exceeds one parking space per residential dwelling unit, 2 percent, but no fewer than one space, of all the parking spaces not covered by F208.2.3.1 shall comply with 502.

F208.2.3.3 Parking for Guests, Employees, and Other Non-Residents. Where parking spaces are provided for persons other than residents, parking shall be provided in accordance with Table F208.2.

F208.2.4 Van Parking Spaces. For every six or fraction of six parking spaces required by F208.2 to comply with 502, at least one shall be a van parking space complying with 502.

F208.3 Location. Parking facilities shall comply with F208.3.

F208.3.1 General. Parking spaces complying with 502 that serve a particular building or facility shall be located on the shortest accessible route from parking to an entrance complying with F206.4. Where parking serves more than one accessible entrance, parking spaces complying with 502 shall be dispersed and located on the shortest accessible route to the accessible entrances. In parking facilities that do not serve a particular building or facility, parking spaces complying with 502 shall be located on the shortest accessible route to an accessible pedestrian entrance of the parking facility.

EXCEPTIONS: 1. All van parking spaces shall be permitted to be grouped on one level within a multi-story parking facility.

2. Parking spaces shall be permitted to be located in different parking facilities if substantially equivalent or greater accessibility is provided in terms of distance from an accessible entrance or entrances, parking fee, and user convenience.

F208.3.2 Residential Facilities. In facilities containing residential dwelling units required to provide mobility features complying with 809.2, parking spaces provided in

accordance with F208.2.3.1 shall be located on the shortest accessible route to the residential dwelling unit entrance they serve. Spaces provided in accordance with F208.2.3.2 shall be dispersed throughout all types of parking provided for the residential dwelling units.

EXCEPTION: Parking spaces provided in accordance with F208.2.3.2 shall not be required to be dispersed throughout all types of parking if substantially equivalent or greater accessibility is provided in terms of distance from an accessible entrance, parking fee, and user convenience.

F209 PASSENGER LOADING ZONES AND BUS STOPS

F209.1 General. Passenger loading zones shall be provided in accordance with F209.

F209.2 Type. Where provided, passenger loading zones shall comply with F209.2.

F209.2.1 Passenger Loading Zones. Passenger loading zones, except those required to comply with F209.2.2 and F209.2.3, shall provide at least one passenger loading zone complying with 503 in every continuous 100 linear feet (30 m) of loading zone space, or fraction thereof.

F209.2.2 Bus Loading Zones. In bus loading zones restricted to use by designated or specified public transportation vehicles, each bus bay, bus stop, or other area designated for lift or ramp deployment shall comply with 810.2.

F209.2.3 On-Street Bus Stops. On-street bus stops shall comply with 810.2 to the maximum extent practicable.

F209.3 Medical Care and Long-Term Care Facilities. At least one passenger loading zone complying with 503 shall be provided at an accessible entrance to licensed medical care and licensed long-term care facilities where the period of stay exceeds twenty-four hours.

F209.4 Valet Parking. Parking facilities that provide valet parking services shall provide at least one passenger loading zone complying with 503.

F209.5 Mechanical Access Parking Garages. Mechanical access parking garages shall provide at least one passenger loading zone complying with 503 at vehicle drop-off and vehicle pick-up areas.

F210 STAIRWAYS

F210.1 General. Interior and exterior stairs that are part of a means of egress shall comply with 504.

EXCEPTIONS: 1. In detention and correctional facilities, stairs that are not located in public use areas shall not be required to comply with 504.

2. In alterations, stairs between levels that are connected by an accessible route shall not be required to comply with 504, except that handrails complying with 505 shall be provided when the stairs are altered.

3. In assembly areas, aisle stairs shall not be required to comply with 504.

4. Stairs that connect play components shall not be required to comply with 504.

F211 DRINKING FOUNTAINS

F211.1 General. Where drinking fountains are provided on an exterior site, on a floor, and within a secured area they shall be provided in accordance with F211.

EXCEPTION: In detention or correctional facilities, drinking fountains only serving holding or housing cells not required to comply with F232 shall not be required to comply with F211.

F211.2 Minimum Number. No fewer than two drinking fountains shall be provided. One drinking fountain shall comply with 602.1 through 602.6 and one drinking fountain shall comply with 602.7.

EXCEPTION: Where a single drinking fountain complies with 602.1 through 602.6 and 602.7, it shall be permitted to be substituted for two separate drinking fountains.

F211.3 More Than Minimum Number. Where more than the minimum number of drinking fountains specified in F211.2 are provided, 50 percent of the total number of drinking fountains provided shall comply with 602.1 through 602.6, and 50 percent of the total number of drinking fountains provided shall comply with 602.7.

EXCEPTION: Where 50 percent of the drinking fountains yields a fraction, 50 percent shall be permitted to be rounded up or down provided that the total number of drinking fountains complying with F211 equals 100 percent of drinking fountains.

F212 KITCHENS, KITCHENETTES, AND SINKS

F212.1 General. Where provided, kitchens, kitchenettes, and sinks shall comply with F212.

F212.2 Kitchens and Kitchenettes. Kitchens and kitchenettes shall comply with 804.

F212.3 Sinks. Where sinks are provided, at least 5 percent, but no fewer than one, of each type provided in each accessible room or space shall comply with 606.

EXCEPTIONS: 1. Mop or service sinks shall not be required to comply with F212.3.

2. In camping facilities and picnic facilities, sinks shall not be required to comply with F212.3 where a cooktop or conventional range is not provided.

F213 TOILET FACILITIES AND BATHING FACILITIES

F213.1 General. Where toilet facilities and bathing facilities are provided, they shall comply with F213. Where toilet facilities and bathing facilities are provided in facilities permitted by F206.2.3 Exceptions 1 and 2 not to connect stories by an accessible route,

toilet facilities and bathing facilities shall be provided on a story connected by an accessible route to an accessible entrance.

EXCEPTION: Pit toilets provided on trails and in camping facilities shall not be required to comply with F213.

F213.2 Toilet Rooms and Bathing Rooms. Where toilet rooms are provided, each toilet room shall comply with 603. Where bathing rooms are provided, each bathing room shall comply with 603.

EXCEPTIONS: 1. In alterations where it is technically infeasible to comply with 603, altering existing toilet or bathing rooms shall not be required where a single unisex toilet room or bathing room complying with F213.2.1 is provided and located in the same area and on the same floor as existing inaccessible toilet or bathing rooms.

2. Where exceptions for alterations to qualified historic buildings or facilities are permitted by F202.5 and toilet rooms are provided, no fewer than one toilet room for each sex complying with 603 or one unisex toilet room complying with F213.2.1 shall be provided.

3. Where multiple single user portable toilet or bathing units are clustered at a single location, no more than 5 percent of the toilet units and bathing units at each cluster shall be required to comply with 603. Portable toilet units and bathing units complying with 603 shall be identified by the International Symbol of Accessibility complying with 703.7.2.1.

4. Where multiple single user toilet rooms are clustered at a single location, no more than 50 percent of the single user toilet rooms for each use at each cluster shall be required to comply with 603.

F213.2.1 Unisex (Single-Use or Family) Toilet and Bathing Rooms. Unisex toilet rooms shall contain not more than one lavatory, and two water closets without urinals or one water closet and one urinal. Unisex bathing rooms shall contain one shower or one shower and one bathtub, one lavatory, and one water closet. Doors to unisex toilet rooms and unisex bathing rooms shall have privacy latches.

F213.3 Plumbing Fixtures and Accessories. Plumbing fixtures and accessories provided in a toilet room or bathing room required to comply with F213.2 shall comply with F213.3.

F213.3.1 Toilet Compartments. Where toilet compartments are provided, at least one toilet compartment shall comply with 604.8.1. In addition to the compartment required to comply with 604.8.1, at least one compartment shall comply with 604.8.2 where six or more toilet compartments are provided, or where the combination of urinals and water closets totals six or more fixtures.

F213.3.2 Water Closets. Where water closets are provided at least one shall comply with 604.

F213.3.3 Urinals. Where more than one urinal is provided, at least one shall comply with 605.

F213.3.4 Lavatories. Where lavatories are provided, at least one shall comply with 606 and shall not be located in a toilet compartment.

F213.3.5 Mirrors. Where mirrors are provided, at least one shall comply with 603.3.

F213.3.6 Bathing Facilities. Where bathtubs or showers are provided, at least one bathtub complying with 607 or at least one shower complying with 608 shall be provided.

F213.3.7 Coat Hooks and Shelves. Where coat hooks or shelves are provided in toilet rooms without toilet compartments, at least one of each type shall comply with 603.4. Where coat hooks or shelves are provided in toilet compartments, at least one of each type complying with 604.8.3 shall be provided in toilet compartments required to comply with F213.3.1. Where coat hooks or shelves are provided in bathing facilities, at least one of each type complying with 603.4 shall serve fixtures required to comply with F213.3.6.

F214 WASHING MACHINES AND CLOTHES DRYERS

F214.1 General. Where provided, washing machines and clothes dryers shall comply with F214.

EXCEPTION: Washing machines and clothes dryers provided in employee work areas shall not be required to comply with F214.

F214.2 Washing Machines. Where three or fewer washing machines are provided, at least one shall comply with 611. Where more than three washing machines are provided, at least two shall comply with 611.

F214.3 Clothes Dryers. Where three or fewer clothes dryers are provided, at least one shall comply with 611. Where more than three clothes dryers are provided, at least two shall comply with 611.

F215 FIRE ALARM SYSTEMS

F215.1 General. Where fire alarm systems provide audible alarm coverage, alarms shall comply with F215.

EXCEPTION: In existing facilities, visible alarms shall not be required except where an existing fire alarm system is upgraded or replaced, or a new fire alarm system is installed.

F215.2 Public and Common Use Areas. Alarms in public use areas and common use areas shall comply with 702.

F215.3 Employee Work Areas. Where employee work areas have audible alarm coverage, the wiring system shall be designed so that visible alarms complying with 702 can be integrated into the alarm system.

F215.4 Transient Lodging. Guest rooms required to comply with F224.4 shall provide alarms complying with 702.

F215.5 Residential Dwelling Units. Where provided in residential dwelling units required to provide communication features complying with 809.3, alarms shall comply with 702.

F216 SIGNS

F216.1 General. Signs shall be provided in accordance with F216 and shall comply with 703.

EXCEPTIONS: 1. Building directories, menus, seat and row designations in assembly areas, occupant names, building addresses, and company names and logos shall not be required to comply with F216.

2. In parking facilities, signs shall not be required to comply with F216.2, F216.3, and F216.6 through F216.12.

3. Temporary, 7 days or less, signs shall not be required to comply with F216.

4. In detention and correctional facilities, signs not located in public use areas shall not be required to comply with F216.

F216.2 Designations. Interior and exterior signs identifying permanent rooms and spaces shall comply with 703.1, 703.2, and 703.5. Where pictograms are provided as designations of permanent interior rooms and spaces, the pictograms shall comply with 703.6 and shall have text descriptors complying with 703.2 and 703.5.

EXCEPTION: Exterior signs that are not located at the door to the space they serve shall not be required to comply with 703.2.

F216.3 Directional and Informational Signs. Signs that provide direction to or information about interior spaces and facilities of the site shall comply with 703.5.

F216.4 Means of Egress. Signs for means of egress shall comply with F216.4.

F216.4.1 Exit Doors. Doors at exit passageways, exit discharge, and exit stairways shall be identified by tactile signs complying with 703.1, 703.2, and 703.5.

F216.4.2 Areas of Refuge. Signs required by section 1003.2.13.5.4 of the International Building Code (2000 edition) or section 1007.6.4 of the International Building Code (2003 edition) (incorporated by reference, see ''Referenced Standards'' in Chapter 1) to provide instructions in areas of refuge shall comply with 703.5.

F216.4.3 Directional Signs. Signs required by section 1003.2.13.6 of the International Building Code (2000 edition) or section 1007.7 of the International Building Code (2003 edition) (incorporated by reference, see ''Referenced Standards'' in Chapter 1) to provide directions to accessible means of egress shall comply with 703.5.

F216.5 Parking. Parking spaces complying with 502 shall be identified by signs complying with 502.6.

EXCEPTIONS: 1. Where a total of four or fewer parking spaces, including accessible parking spaces, are provided on a site, identification of accessible parking spaces shall not be required.

2. In residential facilities, where parking spaces are assigned to specific residential dwelling units, identification of accessible parking spaces shall not be required.

F216.6 Entrances. Where not all entrances comply with 404, entrances complying with 404 shall be identified by the International Symbol of Accessibility complying with 703.7.2.1. Directional signs complying with 703.5 that indicate the location of the nearest entrance complying with 404 shall be provided at entrances that do not comply with 404.

F216.7 Elevators. Where existing elevators do not comply with 407, elevators complying with 407 shall be clearly identified with the International Symbol of Accessibility complying with 703.7.2.1.

F216.8 Toilet Rooms and Bathing Rooms. Where existing toilet rooms or bathing rooms do not comply with 603, directional signs indicating the location of the nearest toilet room or bathing room complying with 603 within the facility shall be provided. Signs shall comply with 703.5 and shall include the International Symbol of Accessibility complying with 703.7.2.1. Where existing toilet rooms or bathing rooms do not comply with 603, the toilet rooms or bathing rooms complying with 603 shall be identified by the International Symbol of Accessibility complying with 703.7.2.1. Where clustered single user toilet rooms or bathing facilities are permitted to use exception to F213.2, toilet rooms or bathing facilities complying with 603 shall be identified by the International Symbol of Accessibility complying with 703.7.2.1 unless all toilet rooms and bathing facilities comply with 603.

F216.9 TTYs. Identification and directional signs for public TTYs shall be provided in accordance with F216.9.

F216.9.1 Identification Signs. Public TTYs shall be identified by the International Symbol of TTY complying with 703.7.2.2.

F216.9.2 Directional Signs. Directional signs indicating the location of the nearest public TTY shall be provided at all banks of public pay telephones not containing a public TTY. In addition, where signs provide direction to public pay telephones, they shall also provide direction to public TTYs. Directional signs shall comply with 703.5 and shall include the International Symbol of TTY complying with 703.7.2.2.

F216.10 Assistive Listening Systems. Each assembly area required by F219 to provide assistive listening systems shall provide signs informing patrons of the availability of the assistive listening system. Assistive listening signs shall comply with 703.5 and shall include the International Symbol of Access for Hearing Loss complying with 703.7.2.4.

EXCEPTION: Where ticket offices or windows are provided, signs shall not be required at each assembly area provided that signs are displayed at each ticket office or window informing patrons of the availability of assistive listening systems.

F216.11 Check-Out Aisles. Where more than one check-out aisle is provided, check-out aisles complying with 904.3 shall be identified by the International Symbol of Accessibility complying with 703.7.2.1. Where check-out aisles are identified by numbers, letters, or functions, signs identifying check-out aisles complying with 904.3 shall be located in the same location as the checkout aisle identification.

EXCEPTION: Where all check-out aisles serving a single function comply with 904.3, signs complying with 703.7.2.1 shall not be required.

F216.12 Amusement Rides. Signs identifying the type of access provided on amusement rides shall be provided at entries to queues and waiting lines. In addition, where accessible unload areas also serve as accessible load areas, signs indicating the location of the accessible load and unload areas shall be provided at entries to queues and waiting lines.

F216.13 Trailhead Signs. Where new trail information signs are provided at trailheads on newly constructed or altered trails designed for use by hikers or pedestrians, the signs shall comply with 1017.10.

F217 TELEPHONES

F217.1 General. Where coin-operated public pay telephones, coinless public pay telephones, public closed-circuit telephones, public courtesy phones, or other types of public telephones are provided, public telephones shall be provided in accordance with F217 for each type of public telephone provided. For purposes of this section, a bank of telephones shall be considered to be two or more adjacent telephones.

F217.2 Wheelchair Accessible Telephones. Where public telephones are provided, wheelchair accessible telephones complying with 704.2 shall be provided in accordance with Table F217.2.

EXCEPTION: Drive-up only public telephones shall not be required to comply with F217.2.

TABLE F217.2—WHEELCHAIR ACCESSIBLE TELEPHONES

Number of telephones provided on a floor, level, or exterior site	Minimum number of required wheelchair accessible telephones
1 or more single units	1 per floor, level, and exterior *site.*
1 bank	1 per floor, level, and exterior *site.*
2 or more banks	1 per bank.

F217.3 Volume Controls. All public telephones shall have volume controls complying with 704.3.

F217.4 TTYs. TTYs complying with 704.4 shall be provided in accordance with F217.4.

F217.4.1 Bank Requirement. Where four or more public pay telephones are provided at a bank of telephones, at least one public TTY complying with 704.4 shall be provided at that bank.

EXCEPTION: TTYs shall not be required at banks of telephones located within 200 feet (61 m) of, and on the same floor as, a bank containing a public TTY.

F217.4.2 Floor Requirement. Where at least one public pay telephone is provided on a floor of a building, at least one public TTY shall be provided on that floor.

F217.4.3 Building Requirement. Where at least one public pay telephone is provided in a public use area of a building, at least one public TTY shall be provided in the building in a public use area.

F217.4.4 Exterior Site Requirement. Where four or more public pay telephones are provided on an exterior site, at least one public TTY shall be provided on the site.

F217.4.5 Rest Stops, Emergency Roadside Stops, and Service Plazas. Where at least one public pay telephone is provided at a public rest stop, emergency roadside stop, or service plaza, at least one public TTY shall be provided.

F217.4.6 Hospitals. Where at least one public pay telephone is provided serving a hospital emergency room, hospital recovery room, or hospital waiting room, at least one public TTY shall be provided at each location.

F217.4.7 Transportation Facilities. In transportation facilities, in addition to the requirements of F217.4.1 through F217.4.4, where at least one public pay telephone serves a particular entrance to a bus or rail facility, at least one public TTY shall be provided to serve that entrance. In airports, in addition to the requirements of F217.4.1 through F217.4.4, where four or more public pay telephones are located in a terminal outside the security areas, a concourse within the security areas, or a baggage claim area in a terminal, at least one public TTY shall be provided in each location.

F217.4.8 Detention and Correctional Facilities. In detention and correctional facilities, where at least one pay telephone is provided in a secured area used only by detainees or inmates and security personnel, at least one TTY shall be provided in at least one secured area.

F217.5 Shelves for Portable TTYs. Where a bank of telephones in the interior of a building consists of three or more public pay telephones, at least one public pay telephone at the bank shall be provided with a shelf and an electrical outlet in accordance with 704.5.

EXCEPTIONS: 1. Secured areas of detention and correctional facilities where shelves and outlets are prohibited for purposes of security or safety shall not be required to comply with F217.5.

2. The shelf and electrical outlet shall not be required at a bank of telephones with a TTY.

F218 TRANSPORTATION FACILITIES

F218.1 General. Transportation facilities shall comply with F218.

F218.2 New and Altered Fixed Guideway Stations. New and altered stations in rapid rail, light rail, commuter rail, intercity rail, high speed rail, and other fixed guideway systems shall comply with 810.5 through 810.10.

F218.3 Bus Shelters. Where provided, bus shelters shall comply with 810.3 and 810.4.

F218.4 Other Transportation Facilities. In other transportation facilities, public address systems shall comply with 810.7 and clocks shall comply with 810.8.

F219 ASSISTIVE LISTENING SYSTEMS

F219.1 General. Assistive listening systems shall be provided in accordance with F219 and shall comply with 706.

F219.2 Required Systems. In each assembly area where audible communication is integral to the use of the space, an assistive listening system shall be provided.

EXCEPTION: Other than in courtrooms, assistive listening systems shall not be required where audio amplification is not provided.

F219.3 Receivers. Receivers complying with 706.2 shall be provided for assistive listening systems in each assembly area in accordance with Table F219.3. Twenty-five percent minimum of receivers provided, but no fewer than two, shall be hearing-aid compatible in accordance with 706.3.

EXCEPTIONS: 1. Where a building contains more than one assembly area and the assembly areas required to provide assistive listening systems are under one management, the total number of required receivers shall be permitted to be calculated according to the total number of seats in the assembly areas in the building provided that all receivers are usable with all systems.

2. Where all seats in an assembly area are served by an induction loop assistive listening system, the minimum number of receivers required by Table F219.3 to be hearing-aid compatible shall not be required to be provided.

TABLE F219.3—RECEIVERS FOR ASSISTIVE LISTENING SYSTEMS

Capacity of seating in assembly area	Minimum number of required receivers	Minimum number of required receivers required to be hearing-aid compatible
50 or less	2	2.
51 to 200	2, plus 1 per 25 seats over 50 seats	2.
201 to 500	2, plus 1 per 25 seats over 50 seats [1]	1 per 4 receivers.[1]
501 to 1000	20, plus 1 per 33 seats over 500 seats [1]	1 per 4 receivers.[1]
1001 to 2000	35, plus 1 per 50 seats over 1000 seats [1].	1 per 4 receivers.[1]
2001 and over	55, plus 1 per 100 seats over 2000 seats [1].	1 per 4 receivers.[1]

[1] Or fraction thereof.

F220 AUTOMATIC TELLER MACHINES AND FARE MACHINES

F220.1 General. Where automatic teller machines or self-service fare vending, collection, or adjustment machines are provided, at least one of each type provided at each location shall comply with 707. Where bins are provided for envelopes, waste paper, or other purposes, at least one of each type shall comply with 811.

F221 ASSEMBLY AREAS

F221.1 General. Assembly areas shall provide wheelchair spaces, companion seats, and designated aisle seats complying with F221 and 802. In addition, lawn seating shall comply with F221.5.

F221.2 Wheelchair Spaces. Wheelchair spaces complying with F221.2 shall be provided in assembly areas with fixed seating.

F221.2.1 Number and Location. Wheelchair spaces shall be provided complying with F221.2.1.

F221.2.1.1 General Seating. Wheelchair spaces complying with 802.1 shall be provided in accordance with Table F221.2.1.1.

TABLE F221.2.1.1—NUMBER OF WHEELCHAIR SPACES IN ASSEMBLY AREAS

Number of seats	Minimum number of required wheelchair spaces
4 to 25	1.
26 to 50	2.
51 to 150	4.
151 to 300	5.
301 to 500	6.
501 to 5000	6, plus 1 for each 150, or fraction thereof, between 501 through 5000.

TABLE F221.2.1.1—NUMBER OF WHEELCHAIR SPACES IN ASSEMBLY AREAS—Continued

Number of seats	Minimum number of required wheelchair spaces
5001 and over	36, plus 1 for each 200, or fraction thereof, over 5000.

F221.2.1.2 Luxury Boxes, Club Boxes, and Suites in Arenas, Stadiums, and Grandstands. In each luxury box, club box, and suite within arenas, stadiums, and grandstands, wheelchair spaces complying with 802.1 shall be provided in accordance with Table F221.2.1.1.

F221.2.1.3 Other Boxes. In boxes other than those required to comply with F221.2.1.2, the total number of wheelchair spaces required shall be determined in accordance with Table F221.2.1.1. Wheelchair spaces shall be located in not less than 20 percent of all boxes provided. Wheelchair spaces shall comply with 802.1.

F221.2.1.4 Team or Player Seating. At least one wheelchair space complying with 802.1 shall be provided in team or player seating areas serving areas of sport activity.

EXCEPTION: Wheelchair spaces shall not be required in team or player seating areas serving bowling lanes not required to comply with F206.2.10.

F221.2.2 Integration. Wheelchair spaces shall be an integral part of the seating plan.

F221.2.3 Lines of Sight and Dispersion. Wheelchair spaces shall provide lines of sight complying with 802.2 and shall comply with F221.2.3. In providing lines of sight, wheelchair spaces shall be dispersed. Wheelchair spaces shall provide spectators with choices of seating locations and viewing angles that are substantially equivalent to, or better than, the choices of seating locations and viewing angles available to all other spectators. When the number of wheelchair spaces required by F221.2.1 has been met, further dispersion shall not be required.

EXCEPTION: Wheelchair spaces in team or player seating areas serving areas of sport activity shall not be required to comply with F221.2.3.

F221.2.3.1 Horizontal Dispersion. Wheelchair spaces shall be dispersed horizontally.

EXCEPTIONS: 1. Horizontal dispersion shall not be required in assembly areas with 300 or fewer seats if the companion seats required by F221.3 and wheelchair spaces are located within the 2nd or 3rd quartile of the total row length. Intermediate aisles shall be included in determining the total row length. If the row length in the 2nd and 3rd quartile of a row is insufficient to accommodate the required number of companion seats and wheelchair spaces, the additional companion seats and wheelchair spaces shall be permitted to be located in the 1st and 4th quartile of the row.

2. In row seating, two wheelchair spaces shall be permitted to be located side-by-side.

F221.2.3.2 Vertical Dispersion. Wheelchair spaces shall be dispersed vertically at varying distances from the screen, performance area, or playing field. In addition, wheelchair spaces shall be located in each balcony or mezzanine that is located on an accessible route.

EXCEPTIONS: 1. Vertical dispersion shall not be required in assembly areas with 300 or fewer seats if the wheelchair spaces provide viewing angles that are equivalent to, or better than, the average viewing angle provided in the facility.

2. In bleachers, wheelchair spaces shall not be required to be provided in rows other than rows at points of entry to bleacher seating.

F221.3 Companion Seats. At least one companion seat complying with 802.3 shall be provided for each wheelchair space required by F221.2.1.

F221.4 Designated Aisle Seats. At least 5 percent of the total number of aisle seats provided shall comply with 802.4 and shall be the aisle seats located closest to accessible routes.

EXCEPTION: Team or player seating areas serving areas of sport activity shall not be required to comply with F221.4.

F221.5 Lawn Seating. Lawn seating areas and exterior overflow seating areas, where fixed seats are not provided, shall connect to an accessible route.

F222 DRESSING, FITTING, AND LOCKER ROOMS

F222.1 General. Where dressing rooms, fitting rooms, or locker rooms are provided, at least 5 percent, but no fewer than one, of each type of use in each cluster provided shall comply with 803.

EXCEPTION: In alterations, where it is technically infeasible to provide rooms in accordance with F222.1, one room for each sex on each level shall comply with 803. Where only unisex rooms are provided, unisex rooms shall be permitted.

F222.2 Coat Hooks and Shelves. Where coat hooks or shelves are provided in dressing, fitting or locker rooms without individual compartments, at least one of each type shall comply with 803.5. Where coat hooks or shelves are provided in individual compartments at least one of each type complying with 803.5 shall be provided in individual compartments in dressing, fitting, or locker rooms required to comply with F222.1.

F223 MEDICAL CARE AND LONG-TERM CARE FACILITIES

F223.1 General. In licensed medical care facilities and licensed long-term care facilities where the period of stay exceeds twenty-four hours, patient or resident sleeping rooms shall be provided in accordance with F223.

EXCEPTION: Toilet rooms that are part of critical or intensive care patient sleeping rooms shall not be required to comply with 603.

F223.1.1 Alterations. Where sleeping rooms are altered or added, the requirements of F223 shall apply only to the sleeping rooms being altered or added until the number of sleeping rooms complies with the minimum number required for new construction.

F223.2 Hospitals, Rehabilitation Facilities, Psychiatric Facilities and Detoxification Facilities. Hospitals, rehabilitation facilities, psychiatric facilities and detoxification facilities shall comply with F223.2.

F223.2.1 Facilities Not Specializing in Treating Conditions That Affect Mobility. In facilities not specializing in treating conditions that affect mobility, at least 10 percent, but no fewer than one, of the patient sleeping rooms shall provide mobility features complying with 805.

F223.2.2 Facilities Specializing in Treating Conditions That Affect Mobility. In facilities specializing in treating conditions that affect mobility, 100 percent of the patient sleeping rooms shall provide mobility features complying with 805.

F223.3 Long-Term Care Facilities. In licensed long-term care facilities, at least 50 percent, but no fewer than one, of each type of resident sleeping room shall provide mobility features complying with 805.

F224 TRANSIENT LODGING GUEST ROOMS

F224.1 General. Transient lodging facilities shall provide guest rooms in accordance with F224.

F224.1.1 Alterations. Where guest rooms are altered or added, the requirements of F224 shall apply only to the guest rooms being altered or added until the number of guest rooms complies with the minimum number required for new construction.

F224.1.2 Guest Room Doors and Doorways. Entrances, doors, and doorways providing user passage into and within guest rooms that are not required to provide mobility features complying with 806.2 shall comply with 404.2.3.

EXCEPTION: Shower and sauna doors in guest rooms that are not required to provide mobility features complying with 806.2 shall not be required to comply with 404.2.3.

F224.2 Guest Rooms with Mobility Features. In transient lodging facilities, guest rooms with mobility features complying with 806.2 shall be provided in accordance with Table F224.2.

TABLE F224.2—GUEST ROOMS WITH MOBILITY FEATURES

Total number of guest rooms provided	Minimum number of required rooms without roll-in showers	Minimum number of required rooms with roll-in showers	Total number of required rooms
1 to 25	1	0	1.
26 to 50	2	0	2.
51 to 75	3	1	4.
76 to 100	4	1	5.
101 to 150	5	2	7.
151 to 200	6	2	8.
201 to 300	7	3	10.
301 to 400	8	4	12.
401 to 500	9	4	13.
501 to 1000	2 percent of total	1 percent of total	3 percent of total.
1001 and over	20, plus 1 for each 100, or fraction thereof, over 1000.	10, plus 1 for each 100, or fraction thereof, over 1000.	30, plus 2 for each 100, or fraction thereof, over 1000.

F224.3 Beds. In guest rooms having more than 25 beds, 5 percent minimum of the beds shall have clear floor space complying with 806.2.3.

F224.4 Guest Rooms with Communication Features. In transient lodging facilities, guest rooms with communication features complying with 806.3 shall be provided in accordance with Table F224.4.

TABLE F224.4—GUEST ROOMS WITH COMMUNICATION FEATURES

Total number of guest rooms provided	Minimum number of required guest rooms with communication features
2 to 25	2.
26 to 50	4.

TABLE F224.4—GUEST ROOMS WITH COMMUNICATION FEATURES—Continued

Total number of guest rooms provided	Minimum number of required guest rooms with communication features
51 to 75	7.
76 to 100	9.
101 to 150	12.
151 to 200	14.
201 to 300	17.
301 to 400	20.
401 to 500	22.
501 to 1000	5 percent of total.
1001 and over	50, plus 3 for each 100 over 1000.

F224.5 Dispersion. Guest rooms required to provide mobility features complying with

806.2 and guest rooms required to provide communication features complying with 806.3 shall be dispersed among the various classes of guest rooms, and shall provide choices of types of guest rooms, number of beds, and other amenities comparable to the choices provided to other guests. Where the minimum number of guest rooms required to comply with 806 is not sufficient to allow for complete dispersion, guest rooms shall be dispersed in the following priority: guest room type, number of beds, and amenities. At least one guest room required to provide mobility features complying with 806.2 shall also provide communication features complying with 806.3. Not more than 10 percent of guest rooms required to provide mobility features complying with 806.2 shall be used to satisfy the minimum number of guest rooms required to provide communication features complying with 806.3.

F225 STORAGE

F225.1 General. Storage facilities shall comply with F225.

F225.2 Storage. Where storage is provided in accessible spaces, at least one of each type shall comply with 811.

F225.2.1 Lockers. Where lockers are provided, at least 5 percent, but no fewer than one of each type, shall comply with 811.

F225.2.2 Self-Service Shelving. Self-service shelves shall be located on an accessible route complying with 402. Self-service shelving shall not be required to comply with 308.

F225.3 Self-Service Storage Facilities. Self-service storage facilities shall provide individual self-service storage spaces complying with these requirements in accordance with Table F225.3.

TABLE F225.3—SELF-SERVICE STORAGE FACILITIES

Total spaces in facility	Minimum number of spaces required to be accessible
1 to 200	5 percent, but no fewer than 1.
201 and over	10, plus 2 percent of total number of units over 200.

F225.3.1 Dispersion. Individual self-service storage spaces shall be dispersed throughout the various classes of spaces provided. Where more classes of spaces are provided than the number required to be accessible, the number of spaces shall not be required to exceed that required by Table F225.3. Self-service storage spaces complying with Table F225.3 shall not be required to be dispersed among buildings in a multi-building facility.

F226 DINING SURFACES AND WORK SURFACES

F226.1 General. Where dining surfaces are provided for the consumption of food or drink, at least 5 percent of the seating spaces and standing spaces at the dining surfaces shall comply with 902. In addition, where work surfaces are provided, at least 5 percent shall comply with 902.

EXCEPTIONS: 1. Sales counters and service counters shall not be required to comply with 902.

2. Check writing surfaces provided at check-out aisles not required to comply with 904.3 shall not be required to comply with 902.

F226.2 Dispersion. Dining surfaces and work surfaces required to comply with 902 shall be dispersed throughout the space or *facility* containing dining surfaces and work surfaces.

F227 SALES AND SERVICE

F227.1 General. Where provided, check-out aisles, sales counters, service counters, food service lines, queues, and waiting lines shall comply with F227 and 904.

F227.2 Check-Out Aisles. Where check-out aisles are provided, check-out aisles complying with 904.3 shall be provided in accordance with Table F227.2. Where check-out aisles serve different functions, check-out aisles complying with 904.3 shall be provided in accordance with Table F227.2 for each function. Where check-out aisles are dispersed throughout the building or facility, check-out aisles complying with 904.3 shall be dispersed.

EXCEPTION: Where the selling space is under 5000 square feet (465 m2) no more than one check-out aisle complying with 904.3 shall be required.

TABLE F227.2—CHECK-OUT AISLES

Number of check-out aisles of each function	Minimum number of check-out aisles of each function required to comply with 904.3
1 to 4	1.
5 to 8	2.
9 to 15	3.
16 and over	3, plus 20 percent of additional aisles.

F227.2.1 Altered Check-Out Aisles. Where check-out aisles are altered, at least one of each check-out aisle serving each function shall comply with 904.3 until the number of check-out aisles complies with F227.2.

F227.3 Counters. Where provided, at least one of each type of sales counter and service counter shall comply with 904.4. Where counters are dispersed throughout the building or facility, counters complying with 904.4 also shall be dispersed.

F227.4 Food Service Lines. Food service lines shall comply with 904.5. Where self-service shelves are provided, at least 50 percent, but no fewer than one, of each type provided shall comply with 308.

F227.5 Queues and Waiting Lines. Queues and waiting lines servicing counters or

check-out aisles required to comply with 904.3 or 904.4 shall comply with 403.

F228 DEPOSITORIES, VENDING MACHINES, CHANGE MACHINES, MAIL BOXES, AND FUEL DISPENSERS

F228.1 General. Where provided, at least one of each type of depository, vending machine, change machine, and fuel dispenser shall comply with 309.

EXCEPTIONS: 1. Drive-up only depositories shall not be required to comply with 309.

2. Fuel dispensers provided for fueling official government vehicles shall not be required to comply with 309.

F228.2 Mail Boxes. Where mail boxes are provided in an interior location, at least 5 percent, but no fewer than one, of each type shall comply with 309. In facilities with residential dwelling units, where mail boxes are provided for each residential dwelling unit, mail boxes complying with 309 shall be provided for each residential dwelling unit required to provide mobility features complying with 809.2.

F229 WINDOWS

F229.1 General. Where glazed openings are provided in accessible rooms or spaces for operation by occupants, excluding employees, at least one opening shall comply with 309. In accessible rooms or spaces, each glazed opening required by an administrative authority to be operable shall comply with 309.

EXCEPTIONS: 1. Glazed openings in residential dwelling units required to comply with 809 shall not be required to comply with F229.

2. Glazed openings in guest rooms required to provide communication features and in guest rooms required to comply with F206.5.3 shall not be required to comply with F229.

F230 TWO-WAY COMMUNICATION SYSTEMS

F230.1 General. Where a two-way communication system is provided to gain admittance to a building or facility or to restricted areas within a building or facility, the system shall comply with 708.

F231 JUDICIAL FACILITIES

F231.1 General. Judicial facilities shall comply with F231.

F231.2 Courtrooms. Each courtroom shall comply with 808.

F231.3 Holding Cells. Where provided, central holding cells and court-floor holding cells shall comply with F231.3.

F231.3.1 Central Holding Cells. Where separate central holding cells are provided for adult male, juvenile male, adult female, or juvenile female, one of each type shall comply with 807.2. Where central holding cells are provided and are not separated by age or sex, at least one cell complying with 807.2 shall be provided.

F231.3.2 Court-Floor Holding Cells. Where separate court-floor holding cells are provided for adult male, juvenile male, adult female, or juvenile female, each courtroom shall be served by one cell of each type complying with 807.2. Where court-floor holding cells are provided and are not separated by age or sex, courtrooms shall be served by at least one cell complying with 807.2. Cells may serve more than one courtroom.

F231.4 Visiting Areas. Visiting areas shall comply with F231.4.

F231.4.1 Cubicles and Counters. At least 5 percent, but no fewer than one, of cubicles shall comply with 902 on both the visitor and detainee sides. Where counters are provided, at least one shall comply with 904.4.2 on both the visitor and detainee sides.

EXCEPTION: The detainee side of cubicles or counters at non-contact visiting areas not serving holding cells required to comply with F231 shall not be required to comply with 902 or 904.4.2.

F231.4.2 Partitions. Where solid partitions or security glazing separate visitors from detainees at least one of each type of cubicle or counter partition shall comply with 904.6.

F232 DETENTION FACILITIES AND CORRECTIONAL FACILITIES

F232.1 General. Buildings, facilities, or portions thereof, in which people are detained for penal or correction purposes, or in which the liberty of the inmates is restricted for security reasons shall comply with F232.

F232.2 General Holding Cells and General Housing Cells. General holding cells and general housing cells shall be provided in accordance with F232.2.

EXCEPTION: Alterations to cells shall not be required to comply except to the extent determined by regulations issued by the appropriate Federal agency having authority under section 504 of the Rehabilitation Act of 1973.

F232.2.1 Cells with Mobility Features. At least 2 percent, but no fewer than one, of the total number of cells in a facility shall provide mobility features complying with 807.2.

F232.2.1.1 Beds. In cells having more than 25 beds, at least 5 percent of the beds shall have clear floor space complying with 807.2.3.

F232.2.2 Cells with Communication Features. At least 2 percent, but no fewer than one, of the total number of general holding cells and general housing cells equipped with audible emergency alarm systems and permanently installed telephones within the cell shall provide communication features complying with 807.3.

F232.3 Special Holding Cells and Special Housing Cells. Where special holding cells or special housing cells are provided, at least one cell serving each purpose shall provide mobility features complying with 807.2. Cells

subject to this requirement include, but are not limited to, those used for purposes of orientation, protective custody, administrative or disciplinary detention or segregation, detoxification, and medical isolation.

EXCEPTION: Alterations to cells shall not be required to comply except to the extent determined by regulations issued by the appropriate Federal agency having authority under section 504 of the Rehabilitation Act of 1973.

F232.4 Medical Care Facilities. Patient bedrooms or cells required to comply with F223 shall be provided in addition to any medical isolation cells required to comply with F232.3.

F232.5 Visiting Areas. Visiting areas shall comply with F232.5.

F232.5.1 Cubicles and Counters. At least 5 percent, but no fewer than one, of cubicles shall comply with 902 on both the visitor and detainee sides. Where counters are provided, at least one shall comply with 904.4.2 on both the visitor and detainee or inmate sides.

EXCEPTION: The inmate or detainee side of cubicles or counters at non-contact visiting areas not serving holding cells or housing cells required to comply with F232 shall not be required to comply with 902 or 904.4.2.

F232.5.2 Partitions. Where solid partitions or security glazing separate visitors from detainees or inmates at least one of each type of cubicle or counter partition shall comply with 904.6.

F233 RESIDENTIAL FACILITIES

F233.1 General. Facilities with residential dwelling units shall comply with F233.

F233.2 Residential Dwelling Units Provided by HUD or Through Grant or Loan Programs Administered by HUD. Where facilities with residential dwelling units are provided by the Department of Housing and Urban Development (HUD), or through a grant or loan program administered by HUD, residential dwelling units with mobility features complying with 809.2 shall be provided in a number required by the regulations issued by HUD under Section 504 of the Rehabilitation Act of 1973, as amended. Residential dwelling units required to provide mobility features complying with 809.2 shall be on an accessible route as required by F206. In addition, residential dwelling units with communication features complying with 809.3 shall be provided in a number required by the applicable HUD regulations. Residential dwelling units subject to F233.2 shall not be required to comply with F233.3 or F233.4.

F233.3 Residential Dwelling Units Provided on Military Installations. Military installations with residential dwelling units shall comply with F233.3. Residential dwelling units on military installations subject to F233.3 shall not be required to comply with F233.2 or F233.4.

F233.3.1 Residential Dwelling Units with Mobility Features. Facilities on military installations containing residential dwelling units, other than emergency transportable housing units, shall comply with F233.3.1.1. Facilities on military installations containing emergency transportable housing units shall comply with F233.3.1.2.

F233.3.1.1 Facilities Other Than Those Containing Emergency Transportable Housing Units. At least 5 percent, but no fewer than one, of the total number of residential dwelling units, other than emergency transportable housing units, in the facility shall provide mobility features complying with 809.2 and shall be on an accessible route as required by F206.

F233.3.1.2 Facilities Containing Emergency Transportable Housing Units. Entities shall provide emergency transportable housing units with mobility features complying with 809.2 as determined by a needs assessment conducted by the entity providing the emergency transportable housing units.

F233.3.2 Residential Dwelling Units with Communication Features. Facilities on military installations, other than those containing emergency transportable housing units, shall comply with F233.3.2.1. Facilities on military installations containing emergency transportable housing units shall comply with F233.3.2.2.

F233.3.2.1 Facilities Other Than Those Containing Emergency Transportable Housing Units. At least 2 percent, but no fewer than one, of the total number of residential dwelling units, other than emergency transportable housing units, in the facility shall provide communication features complying with 809.3.

F233.3.2.2 Facilities Containing Emergency Transportable Housing Units. Entities shall provide emergency transportable housing units with residential dwelling unit smoke alarms complying with 809.3.1 and, where weather alert systems are provided, with weather alert systems complying with 809.3.4 as determined by a needs assessment conducted by the entity providing the emergency transportable housing units.

F233.3.3 Additions. Where an addition to an existing building results in an increase in the number of residential dwelling units, the requirements of F233.3.1.1 and F233.3.2.1 shall apply only to the residential dwelling units that are added until the total number of residential dwelling units complies with the minimum number required by F233.3.1.1 and F233.3.2.1. Residential dwelling units required to comply with F233.3.1.1 shall be on an accessible route as required by F206.

F233.3.4 Alterations. Alterations shall comply with F233.3.4.

EXCEPTION: Where compliance with 809.2.1, 809.2.3, or 809.2.4 is technically infeasible, or where it is technically infeasible to provide an accessible route to a residential

dwelling unit, the entity shall be permitted to alter or construct a comparable residential dwelling unit to comply with 809.2 provided that the minimum number of residential dwelling units required by F233.3.1.1 and F233.3.2.1, as applicable, is satisfied.

F233.3.4.1 Alterations to Vacated Buildings. Where a building is vacated for the purposes of alteration, at least 5 percent of the residential dwelling units shall comply with 809.2 and shall be on an accessible route as required by 206. In addition, at least 2 percent of the residential dwelling units shall comply with 809.3.

F233.3.4.2 Alterations to Individual Residential Dwelling Units. In individual residential dwelling units, where a bathroom or a kitchen is substantially altered, and at least one other room is altered, the requirements of F233.3.1 shall apply to the altered residential dwelling units until the total number of residential dwelling units complies with the minimum number required by F233.3.1.1 and F233.3.2.1. Residential dwelling units required to comply with F233.3.1.1 shall be on an accessible route as required by 206.

F233.3.5 Dispersion. Residential dwelling units required to provide mobility features complying with 809.2 and residential dwelling units required to provide communication features complying with 809.3 shall be dispersed among the various types of residential dwelling units in the facility and shall provide choices of residential dwelling units comparable to, and integrated with, those available to other residents.

2. Emergency transportable housing units required to provide mobility features complying with 809.2 shall not be required to be dispersed among the various types of residential dwelling units in a facility or to provide choices of residential dwelling units comparable to those available to other residents.

F233.4 Residential Dwelling Units Provided by Other Federal Agencies or Through Grant or Loan Programs Administered by Other Federal Agencies. Facilities with residential dwelling units provided by other federal agencies or through grant or loan programs administered by other federal agencies shall comply with F233.4. Residential dwelling units subject to F233.4 shall not be required to comply with F233.2 or F233.3.

F233.4.1 Residential Dwelling Units with Mobility Features. Facilities, other than those containing emergency transportable housing units, shall comply with F233.4.1.1. Facilities containing emergency transportable housing units shall comply with F233.4.1.2.

F233.4.1.1 Facilities Other Than Those Containing Emergency Transportable Housing Units. At least 5 percent, but no fewer than one, of the total number of residential dwelling units, other than emergency transportable housing units, in the facility shall provide mobility features complying with 809.2 and shall be on an accessible route as required by F206.

EXCEPTION: Where facilities contain 15 or fewer residential dwelling units, the requirements of F233.4.1.1 shall apply to the total number of residential dwelling units that are constructed under a single contract, or are developed as a whole, whether or not located on a common site.

F233.4.1.2 Facilities Containing Emergency Transportable Housing Units. Emergency transportable housing units with mobility features shall be provided in accordance with F233.4.1.2.

F233.4.1.2.1 Private Sites Provided by Occupant of Unit. Where emergency transportable housing units are installed on private sites provided by the occupant of the unit, entities shall provide emergency transportable housing units with mobility features complying with 809.2 as determined by a needs assessment conducted by the entity providing the emergency transportable housing units.

F233.4.1.2.2 Group Sites. Where group sites are developed for the installation of emergency transportable housing units, entities shall comply with 233.3.1.2.2.

F233.4.1.2.2.1 Unit Pads. At least 10 percent, but no fewer than one, of the unit pads prepared for the installation of emergency transportable housing units at each group site shall be designed and constructed to accept the installation of emergency transportable housing units with mobility features complying with 809.2 and shall be on an accessible route as required by F206.

F233.4.1.2.2.2 Units Installed. At least 5 percent, but no fewer than one, of the total number of the emergency transportable housing units installed at each group site shall provide mobility features complying with 809.2.

F233.4.2 Residential Dwelling Units with Communication Features. Facilities, other than those containing emergency transportable housing units, shall comply with F233.4.2.1. Facilities containing emergency transportable housing units shall comply with F233.4.2.2.

F233.4.2.1 Facilities Other Than Those Containing Emergency Transportable Housing Units. At least 2 percent, but no fewer than one, of the total number of residential dwelling units, other than emergency transportable housing units, in the facility shall provide communication features complying with 809.3.

EXCEPTION: Where facilities contain 15 or fewer residential dwelling units, the requirements of F233.4.2.1 shall apply to the total number of residential dwelling units that are constructed under a single contract, or are developed as a whole, whether or not located on a common site.

F233.4.2.2 Facilities Containing Emergency Transportable Housing Units. Entities shall provide emergency transportable housing units with residential dwelling unit smoke alarms complying with 809.3.1 and, where weather alert systems are provided, with weather alert systems complying with 809.3.4 as determined by a needs assessment conducted by the entity providing the emergency transportable housing units.

F233.4.3 Residential Dwelling Units for Sale. Residential dwelling units offered for sale shall provide accessible features to the extent required by regulations issued by Federal agencies under Section 504 of the Rehabilitation Act of 1973, as amended.

F233.4.4 Additions. Where an addition to an existing building results in an increase in the number of residential dwelling units, the requirements of F233.4.1.1 and F233.4.2.1 shall apply only to the residential dwelling units that are added until the total number of residential dwelling units complies with the minimum number required by F233.4.1.1 and F233.4.2.1. Residential dwelling units required to comply with F233.4.1.1 shall be on an accessible route as required by F206.

F233.4.5 Alterations. Alterations shall comply with F233.4.5.

EXCEPTION: Where compliance with 809.2.1, 809.2.2, or 809.2.3 is technically infeasible, or where it is technically infeasible to provide an accessible route to a residential dwelling unit, the entity shall be permitted to alter or construct a comparable residential dwelling unit to comply with 809.2 provided that the minimum number of residential dwelling units required by F233.4.1.1 and F233.4.2.1, as applicable, is satisfied.

F233.4.5.1 Alterations to Vacated Buildings. Where a building is vacated for the purposes of alteration, and the altered building contains more than 15 residential dwelling units, at least 5 percent of the residential dwelling units shall comply with 809.2 and shall be on an accessible route as required by F206. In addition, at least 2 percent of the residential dwelling units shall comply with 809.3.

F233.4.5.2 Alterations to Individual Residential Dwelling Units. In individual residential dwelling units, where a bathroom or a kitchen is substantially altered, and at least one other room is altered, the requirements of F233.4.1 shall apply to the altered residential dwelling units until the total number of residential dwelling units complies with the minimum number required by F233.4.1.1 and F233.4.2.1. Residential dwelling units required to comply with F233.4.1.1 shall be on an accessible route as required by F206.

EXCEPTION: Where facilities contain 15 or fewer residential dwelling units, the requirements of F233.4.1.1 and F233.4.2.1 shall apply to the total number of residential dwelling units that are altered under a single contract, or are developed as a whole, whether or not located on a common site.

F233.4.6 Dispersion. Residential dwelling units required to provide mobility features complying with 809.2 and residential dwelling units required to provide communication features complying with 809.3 shall be dispersed among the various types of residential dwelling units in the facility and shall provide choices of residential dwelling units comparable to, and integrated with, those available to other residents.

EXCEPTIONS: 1. Where multi-story residential dwelling units are one of the types of residential dwelling units provided, one-story residential dwelling units shall be permitted as a substitute for multi-story residential dwelling units where equivalent spaces and amenities are provided in the one-story residential dwelling unit.

2. Emergency transportable housing units required to provide mobility features complying with 809.2 shall not be required to be dispersed among the various types of residential dwelling units in a facility or to provide choices of residential dwelling units comparable to those available to other residents.

F234 Amusement Rides

F234.1 General. Amusement rides shall comply with F234.

EXCEPTION: Mobile or portable amusement rides shall not be required to comply with F234.

F234.2 Load and Unload Areas. Load and unload areas serving amusement rides shall comply with 1002.3.

F234.3 Minimum Number. Amusement rides shall provide at least one wheelchair space complying with 1002.4, or at least one amusement ride seat designed for transfer complying with 1002.5, or at least one transfer device complying with 1002.6.

EXCEPTIONS: 1. Amusement rides that are controlled or operated by the rider shall not be required to comply with F234.3.

2. Amusement rides designed primarily for children, where children are assisted on and off the ride by an adult, shall not be required to comply with F234.3.

3. Amusement rides that do not provide amusement ride seats shall not be required to comply with F234.3.

F234.4 Existing Amusement Rides. Where existing amusement rides are altered, the alteration shall comply with F234.4.

F234.4.1 Load and Unload Areas. Where load and unload areas serving existing amusement rides are newly designed and constructed, the load and unload areas shall comply with 1002.3.

F234.4.2 Minimum Number. Where the structural or operational characteristics of an amusement ride are altered to the extent that the amusement ride's performance differs from that specified by the manufacturer

or the original design, the amusement ride shall comply with F234.3.

F235 RECREATIONAL BOATING FACILITIES

F235.1 General. Recreational boating facilities shall comply with F235.

F235.2 Boat Slips. Boat slips complying with 1003.3.1 shall be provided in accordance with Table F235.2. Where the number of boat slips is not identified, each 40 feet (12 m) of boat slip edge provided along the perimeter of the pier shall be counted as one boat slip for the purpose of this section.

TABLE F235.2—BOAT SLIPS

Total number of boat slips provided in facility	Minimum number of required accessible boat slips
1 to 25	1.
26 to 50	2.
51 to 100	3.
101 to 150	4.
151 to 300	5.
301 to 400	6.
401 to 500	7.
501 to 600	8.
601 to 700	9.
701 to 800	10.
801 to 900	11.
901 to 1000	12.
1001 and over	12, plus 1 for every 100, or fraction thereof, over 1000.

F235.2.1 Dispersion. Boat slips complying with 1003.3.1 shall be dispersed throughout the various types of boat slips provided. Where the minimum number of boat slips required to comply with 1003.3.1 has been met, no further dispersion shall be required.

F235.3 Boarding Piers at Boat Launch Ramps. Where boarding piers are provided at boat launch ramps, at least 5 percent, but no fewer than one, of the boarding piers shall comply with 1003.3.2.

F236 EXERCISE MACHINES AND EQUIPMENT

F236.1 General. At least one of each type of exercise machine and equipment shall comply with 1004.

F237 FISHING PIERS AND PLATFORMS

F237.1 General. Fishing piers and platforms shall comply with 1005.

F238 GOLF FACILITIES

F238.1 General. Golf facilities shall comply with F238.

F238.2 Golf Courses. Golf courses shall comply with F238.2.

F238.2.1 Teeing Grounds. Where one teeing ground is provided for a hole, the teeing ground shall be designed and constructed so that a golf car can enter and exit the teeing ground. Where two teeing grounds are provided for a hole, the forward teeing ground shall be designed and constructed so that a golf car can enter and exit the teeing ground. Where three or more teeing grounds are provided for a hole, at least two teeing grounds, including the forward teeing ground, shall be designed and constructed so that a golf car can enter and exit each teeing ground.

EXCEPTION: In existing golf courses, the forward teeing ground shall not be required to be one of the teeing grounds on a hole designed and constructed so that a golf car can enter and exit the teeing ground where compliance is not feasible due to terrain.

F238.2.2 Putting Greens. Putting greens shall be designed and constructed so that a golf car can enter and exit the putting green.

F238.2.3 Weather Shelters. Where provided, weather shelters shall be designed and constructed so that a golf car can enter and exit the weather shelter and shall comply with 1006.4.

F238.3 Practice Putting Greens, Practice Teeing Grounds, and Teeing Stations at Driving Ranges. At least 5 percent, but no fewer than one, of practice putting greens, practice teeing grounds, and teeing stations at driving ranges shall be designed and constructed so that a golf car can enter and exit the practice putting greens, practice *teeing grounds,* and teeing stations at driving ranges.

F239 MINIATURE GOLF FACILITIES

F239.1 General. Miniature golf facilities shall comply with F239.

F239.2 Minimum Number. At least 50 percent of holes on miniature golf courses shall comply with 1007.3.

F239.3 Miniature Golf Course Configuration. Miniature golf courses shall be configured so that the holes complying with 1007.3 are consecutive. Miniature golf courses shall provide an accessible route from the last hole complying with 1007.3 to the course entrance or exit without requiring travel through any other holes on the course.

EXCEPTION: One break in the sequence of consecutive holes shall be permitted provided that the last hole on the miniature golf course is the last hole in the sequence.

F240 PLAY AREAS

F240.1 General. Play areas for children ages 2 and over shall comply with F240. Where separate play areas are provided within a site for specific age groups, each play area shall comply with F240.

EXCEPTIONS: 1. Play areas located in family child care facilities where the proprietor actually resides shall not be required to comply with F240.

2. In existing play areas, where play components are relocated for the purposes of creating safe use zones and the ground surface is not altered or extended for more than one use zone, the play area shall not be required to comply with F240.

3. Amusement attractions shall not be required to comply with F240.

4. Where play components are altered and the ground surface is not altered, the ground surface shall not be required to comply with 1008.2.6 unless required by F202.4.

F240.1.1 Additions. Where play areas are designed and constructed in phases, the requirements of F240 shall apply to each successive addition so that when the addition is completed, the entire play area complies with all the applicable requirements of F240.

F240.2 Play Components. Where provided, play components shall comply with F240.2.

F240.2.1 Ground Level Play Components. Ground level play components shall be provided in the number and types required by F240.2.1. Ground level play components that are provided to comply with F240.2.1.1 shall be permitted to satisfy the additional number required by F240.2.1.2 if the minimum required types of play components are satisfied. Where two or more required ground level play components are provided, they shall be dispersed throughout the play area and integrated with other play components.

F240.2.1.1 Minimum Number and Types. Where ground level play components are provided, at least one of each type shall be on an accessible route and shall comply with 1008.4.

F240.2.1.2 Additional Number and Types. Where elevated play components are provided, ground level play components shall be provided in accordance with Table F240.2.1.2 and shall comply with 1008.4.

EXCEPTION: If at least 50 percent of the elevated play components are connected by a ramp and at least 3 of the elevated play components connected by the ramp are different types of play components, the play area shall not be required to comply with F240.2.1.2.

TABLE F240.2.1.2—NUMBER AND TYPES OF GROUND LEVEL PLAY COMPONENTS REQUIRED TO BE ON ACCESSIBLE ROUTES

Number of elevated play components provided	Minimum number of ground level play components required to be on an accessible route	Minimum number of different types of ground level play components required to be on an accessible route
1	Not applicable	Not applicable.
2 to 4	1	1.
5 to 7	2	2.
8 to 10	3	3.
11 to 13	4	3.
14 to 16	5	3.
17 to 19	6	3.
20 to 22	7	4.
23 to 25	8	4.
26 and over	8, plus 1 for each additional 3, or fraction thereof, over 25.	5.

F240.2.2 Elevated Play Components. Where elevated play components are provided, at least 50 percent shall be on an accessible route and shall comply with 1008.4.

F241 SAUNAS AND STEAM ROOMS

F241.1 General. Where provided, saunas and steam rooms shall comply with 612.

EXCEPTION: Where saunas or steam rooms are clustered at a single location, no more than 5 percent of the saunas and steam rooms, but no fewer than one, of each type in each cluster shall be required to comply with 612.

F242 SWIMMING POOLS, WADING POOLS, AND SPAS

F242.1 General. Swimming pools, wading pools, and spas shall comply with F242.

F242.2 Swimming Pools. At least two accessible means of entry shall be provided for swimming pools. Accessible means of entry shall be swimming pool lifts complying with 1009.2; sloped entries complying with 1009.3; transfer walls complying with 1009.4; transfer systems complying with 1009.5; and pool stairs complying with 1009.6. At least one accessible means of entry provided shall comply with 1009.2 or 1009.3.

EXCEPTIONS: 1. Where a swimming pool has less than 300 linear feet (91 m) of swimming pool wall, no more than one accessible means of entry shall be required provided that the accessible means of entry is a swimming pool lift complying with 1009.2 or sloped entry complying with 1009.3.

2. Wave action pools, leisure rivers, sand bottom pools, and other pools where user access is limited to one area shall not be required to provide more than one accessible means of entry provided that the accessible means of entry is a swimming pool lift complying with 1009.2, a sloped entry complying with 1009.3, or a transfer system complying with 1009.5.

3. Catch pools shall not be required to provide an accessible means of entry provided that the catch pool edge is on an accessible route.

F242.3 Wading Pools. At least one accessible means of entry shall be provided for

wading pools. Accessible means of entry shall comply with sloped entries complying with 1009.3.

F242.4 Spas. At least one accessible means of entry shall be provided for spas. Accessible means of entry shall comply with swimming pool lifts complying with 1009.2; transfer walls complying with 1009.4; or transfer systems complying with 1009.5.

EXCEPTION: Where spas are provided in a cluster, no more than 5 percent, but no fewer than one, spa in each cluster shall be required to comply with F242.4.

F243 SHOOTING FACILITIES WITH FIRING POSITIONS

F243.1 General. Where shooting facilities with firing positions are designed and constructed at a site, at least 5 percent, but no fewer than one, of each type of firing position shall comply with 1010.

F244 CAMPING FACILITIES

F244.1 General. Camping facilities, other than camping facilities on trails, shall comply with F244.

F244.2 Camping Units with Mobility Features. Camping facilities shall provide camping units with mobility features complying with F244.2 in accordance with Table F244.2. Where a camping facility provides different types of camping units, Table F244.2 shall apply to each type of camping unit provided.

TABLE F244.2—CAMPING UNITS WITH MOBILITY FEATURES

Total number of camping units provided in camping facility	Minimum number of camping units with mobility features required
1	1.
2 to 25	2.
26 to 50	3.
51 to 75	4.
76 to 100	5.
101 to 150	7.
151 to 200	8.
201 and over	8, plus 2 percent of the number over 200.

F244.2.1 Alterations and Additions. Where camping units are altered or added, the requirements of F244.2 shall apply only to the camping units that are altered or added until the number of camping units with mobility features complies with the minimum number required in Table 244.2.

EXCEPTION: Where an entity is implementing a transition plan for program accessibility developed pursuant to regulations issued under section 504 of the Rehabilitation Act that designates specific camping units to provide mobility features complying with F244.2, the entity shall not be required to comply with F244.2 when altering individual elements within camping units that are not designated to provide mobility features complying with F244.2.

F244.2.2 Dispersion. Camping units required to provide mobility features complying with F244.2 shall provide choices of camping units comparable to, and integrated with, those available to others.

F244.2.3 Elements Within Camping Units with Mobility Features. Elements within camping units required to provide mobility features shall comply with F244.2.3.

F244.2.3.1 Outdoor Constructed Features. Where provided, at least one of each type of outdoor constructed features shall comply with 1011. Where more than one of the same type of outdoor constructed features is provided, at least two of the same type of outdoor constructed features shall comply with 1011.

F244.2.3.2 Parking Spaces. Where provided, parking spaces shall comply with F244.2.3.2.

F244.2.3.2.1 Recreational Vehicles. Where parking spaces are provided for recreational vehicles, at least one parking space shall comply with 1012.2, 1012.4, and 1012.5. Where more than one parking space is provided for recreational vehicles, at least two parking spaces shall comply with 1012.2, 1012.4, and 1012.5.

F244.2.3.2.2 Vehicles Other Than Recreational Vehicles. Where parking spaces are provided for vehicles other than recreational vehicles, at least one parking space shall comply with 1012.3, 1012.4, and 1012.5. Where more than one parking space is provided for a vehicle other than a recreational vehicle, at least two parking spaces shall comply with 1012.3, 1012.4, and 1012.5.

244.2.3.3 Tent Pads and Tent Platforms. Where provided, at least one tent pad and tent platform shall comply with 1013. Where more than one tent pad and tent platform is provided, at least two tent pads and tent platforms shall comply with 1013.

F244.2.3.4 Camp Shelters. Where provided, at least one camp shelter shall comply with 1014. Where more than one camp shelter is provided, at least two camp shelters shall comply with 1014.

F244.3 Outdoor Constructed Features in Common Use and Public Use Areas. Where provided in common use and public use areas that serve camping units with mobility features, at least 20 percent, but not less than one, of each type of outdoor constructed feature provided at each location shall comply with 1011.

F244.4 Pull-up Spaces for Recreational Vehicles at Dump Stations. Where provided, pull-up spaces for recreational vehicles at dump stations shall comply with 1012.2, 1012.4, and 1012.5.

F244.5 Outdoor Recreation Access Routes. Camping facilities shall provide outdoor recreation access routes complying with 1016 in accordance with F244.5.

F244.5.1 Routes Within Camping Units with Mobility Features. At least one outdoor recreation access route shall connect accessible elements, spaces, and facilities provided within camping units with mobility features.

F244.5.2 Routes to and Within Common Use and Public Use Areas. Common use and public use areas serving camping units with mobility features shall provide outdoor recreation access routes in accordance with F244.5.2.

EXCEPTION: Outdoor recreation access routes shall not be required to connect camping units with mobility features and recreational vehicle dump stations where a pull-up space complying with 1012.2, 1012.4, and 1012.5 is provided at the dump station for recreational vehicles.

F244.5.2.1 Routes to Common Use and Public Use Areas. At least one outdoor recreation access route shall connect each camping unit with mobility features with common use and public use areas serving the unit.

F244.5.2.2 Routes Within Common Use and Public Use Areas. At least one outdoor recreation access route shall connect accessible elements, spaces, and facilities provided within common use and public use areas serving camping units with mobility features.

F244.5.3 Routes to Adjacent Recreation Facilities. Where a circulation path connects camping facilities and adjacent recreation facilities, at least one outdoor recreation access route shall connect camping units with mobility features to an accessible route serving the adjacent recreation facilities.

F244.5.4 Location. Outdoor recreation access routes required by F244.5.2 and F244.5.3 shall coincide with or be located in the same area as general circulation paths.

F245 PICNIC FACILITIES

F245.1 General. Picnic facilities, other than picnic facilities on trails, shall comply with F245.

F245.2 Picnic Units with Mobility Features. Picnic facilities shall provide picnic units with mobility features in accordance with F245.2.

F245.2.1 Picnic Facilities with Two or Fewer Picnic Units. Where picnic facilities contain two or fewer picnic units, each picnic unit shall provide mobility features complying with F245.2.

F245.2.2 Picnic Facilities with More Than Two Picnic Units. Where picnic facilities contain more than two picnic units, at least 20 percent, but not less than two, of the picnic units shall provide mobility features complying with F245.2.

F245.2.3 Alterations and Additions. Where picnic units are altered or added, the requirements of F245.2 shall apply only to the picnic units that are altered or added until the number of picnic units with mobility features complies with the minimum number required in F245.2.1 or F245.2.2.

EXCEPTION: Where an entity is implementing a transition plan for program accessibility developed pursuant to regulations issued under section 504 of the Rehabilitation Act that designates specific picnic units to provide mobility features complying with F245.2, the entity shall not be required to comply with F245.2 when altering individual elements within picnic units that are not designated to provide mobility features complying with F245.2.

F245.2.4 Dispersion. Picnic units required to provide mobility features complying with F245.2 shall provide choices of picnic units comparable to, and integrated with, those available to others.

F245.2.5 Elements Within Picnic Units with Mobility Features. Elements within picnic units required to provide mobility features shall comply with F245.2.5.

F245.2.5.1 Outdoor Constructed Features. Where provided, at least one of each type of outdoor constructed feature shall comply with 1011. Where more than one of the same type of outdoor constructed feature is provided, at least two of the same type of outdoor constructed features shall comply with 1011.

F245.2.5.2 Parking Spaces. Where provided, at least one parking space shall comply with 1012.3, 1012.4, and 1012.5. Where more than one parking space is provided, at least two parking spaces shall comply with 1012.3, 1012.4, and 1012.5.

F245.3 Outdoor Constructed Features in Common Use and Public Use Areas. Where provided in common use and public use areas that serve picnic units with mobility features, at least 20 percent, but not less than one, of each type of outdoor constructed feature provided at each location shall comply with 1011.

F245.4 Outdoor Recreation Access Routes. Picnic facilities shall provide outdoor recreation access routes complying with 1016 in accordance with F245.4.

F245.4.1 Routes Within Picnic Units with Mobility Features. At least one outdoor recreation access route shall connect accessible elements, spaces, and facilities provided within picnic units with mobility features.

F245.4.2 Routes to and Within Common Use and Public Use Areas. Common use and public use areas serving picnic units with mobility features shall provide outdoor recreation access routes in accordance with F245.4.2.

F245.4.2.1 Routes to Common Use and Public Use Areas. At least one outdoor recreation access route shall connect each picnic unit with mobility features with common use and public use areas serving that unit.

F245.4.2.2 Routes Within Common Use and Public Use Areas. At least one outdoor recreation access route shall connect accessible elements, spaces, and facilities provided within common use and public use areas serving picnic units with mobility features.

F245.4.3 Routes to Adjacent Recreation Facilities. Where a circulation path connects picnic facilities and adjacent recreation facilities, at least one outdoor recreation access route shall connect picnic units with mobility features to an accessible route serving the adjacent recreation facilities.

F245.4.4 Location. Outdoor recreation access routes required by F245.4.2 and F245.4.3 shall coincide with or be located in the same area as general circulation paths.

F246 VIEWING AREAS

F246.1 General. Viewing areas, other than viewing areas on trails, shall comply with F246.1.

F246.2 Distinct Viewing Locations. Each distinct viewing location within a viewing area shall comply with 1015.

F246.3 Outdoor Constructed Features. Where provided within viewing areas, at least 20 percent, but not less than one, of each type of outdoor constructed feature shall comply with 1011.

F246.4 Outdoor Recreation Access Routes. At least one outdoor recreation access route complying with 1016 shall connect accessible parking spaces or other arrival points serving the viewing area with accessible elements, spaces, and facilities provided within the viewing area.

F247 TRAILS

F247.1 General. Where a trail is designed for use by hikers or pedestrians and directly connects to a trailhead or another trail that substantially meets the requirements in 1017, the trail shall comply with 1017.

F247.2 Existing Trails. Where the original design, function, or purpose of an existing trail is changed and the altered portion of the trail directly connects to a trailhead or another trail that substantially meets the requirements in 1017, the altered portion of the trail shall comply with 1017.

F247.3 Trailheads. Trailheads shall comply with F247.3.

F247.3.1 Outdoor Constructed Features. Where provided within trailheads, at least 20 percent, but not less than one, of each type of outdoor constructed feature shall comply with 1011.

F247.3.2 Outdoor Recreation Access Routes. At least one outdoor recreation access route complying with 1016 shall connect the following:

1. Accessible parking spaces or other arrival points serving the trailhead;
2. Starting point of the trail; and
3. Accessible elements, spaces, and facilities provided within the trailhead.

F247.4 Trail Facilities. Where provided on trails, facilities shall comply with F247.4.

F247.4.1 Camping Facilities. Camping facilities provided on trails shall comply with F244.2 and F244.3.

F247.4.2 Picnic Facilities. Picnic facilities provided on trails shall comply with F245.2 and F245.3.

F247.4.3 Viewing Areas. Viewing areas provided on trails shall comply with F246.2 and F246.3.

F247.4.4 Routes. Routes that connect trails complying with 1017 to camping facilities, picnic facilities, viewing areas, pit toilets, and accessible elements provided within the facilities shall comply with 1017.

F247.5 Outdoor Constructed Features. Where outdoor constructed features are provided on trails, other than within facilities specified in F247.4, at least 20 percent, but not less than one, of each type of outdoor constructed feature at each location shall comply with 1011.

F248 BEACH ACCESS ROUTES

F248.1 General. Beach access routes complying with 1018 shall be provided in accordance with F248.1. Beach access routes shall be permanent or removable.

EXCEPTION: Beach access routes shall not be required where pedestrian access to the beach is not permitted.

F248.1.1 Facilities Serving Beaches. Beach access routes shall be provided in a number complying with F248.2 where the entity that administers or manages a beach constructs or alters any of the following facilities to serve the beach:

1. Circulation paths;
2. Parking facilities;
3. Toilet facilities; or
4. Bathing facilities.

EXCEPTION: The entity shall not be required to expend more than 20 percent of the costs of constructing or altering the facilities to provide beach access routes.

F248.1.2 Beach Nourishment. Beach access routes shall be provided in a number complying with F248.2 where the entity that administers or manages a beach undertakes a beach nourishment project.

EXCEPTION: The entity shall not be required to expend more than 20 percent of the costs of a beach nourishment project to provide beach access routes.

F248.2 Minimum Number. Where beach access routes are required by F248.1, at least one beach access route shall be provided for each 1/2 mile (0.8 km) of beach shoreline administered or managed by the entity.

EXCEPTION: The number of beach access routes shall not be required to exceed the number of pedestrian access points provided by the entity to a beach.

F248.3 Location. Beach access routes shall coincide with or be located in the same area as pedestrian access points to the beach.

[78 FR 59509, Sept. 26, 2013, as amended at 78 FR 67303, Nov. 12, 2013; 79 FR 26139, May 7, 2014; 79 FR 57805, Sept. 26, 2014]

EDITORIAL NOTE: At 79 FR 26139, May 7, 2014, Appendix C to part 1191 was amended; however, several actions could not be incorporated due to inaccurate amendatory instruction.

APPENDIX D TO PART 1191—TECHNICAL

CHAPTER 3: BUILDING BLOCKS

301 GENERAL

301.1 Scope. The provisions of Chapter 3 shall apply where required by Chapter 2 or where referenced by a requirement in this document.

302 FLOOR OR GROUND SURFACES

302.1 General. Floor and ground surfaces shall be stable, firm, and slip resistant and shall comply with 302.

EXCEPTIONS: 1. Within animal containment areas, floor and ground surfaces shall not be required to be stable, firm, and slip resistant.

2. Areas of sport activity shall not be required to comply with 302.

302.2 Carpet. Carpet or carpet tile shall be securely attached and shall have a firm cushion, pad, or backing or no cushion or pad. Carpet or carpet tile shall have a level loop, textured loop, level cut pile, or level cut/uncut pile texture. Pile height shall be ½ inch (13 mm) maximum. Exposed edges of carpet shall be fastened to floor surfaces and shall have trim on the entire length of the exposed edge. Carpet edge trim shall comply with 303.

302.3 Openings. Openings in floor or ground surfaces shall not allow passage of a sphere more than ½ inch (13 mm) diameter except as allowed in 407.4.3, 409.4.3, 410.4, 810.5.3 and 810.10. Elongated openings shall be placed so that the long dimension is perpendicular to the dominant direction of travel.

303 CHANGES IN LEVEL

303.1 General. Where changes in level are permitted in floor or ground surfaces, they shall comply with 303.

EXCEPTIONS: 1. Animal containment areas shall not be required to comply with 303.

2. Areas of sport activity shall not be required to comply with 303.

303.2 Vertical. Changes in level of ¼ inch (6.4 mm) high maximum shall be permitted to be vertical.

303.3 Beveled. Changes in level between ¼ inch (6.4 mm) high minimum and ½ inch (13 mm) high maximum shall be beveled with a slope not steeper than 1:2.

303.4 Ramps. Changes in level greater than ½ inch (13 mm) high shall be ramped, and shall comply with 405 or 406.

304 TURNING SPACE

304.1 General. Turning space shall comply with 304.

304.2 Floor or Ground Surfaces. Floor or ground surfaces of a turning space shall comply with 302. Changes in level are not permitted.

EXCEPTION: Slopes not steeper than 1:48 shall be permitted.

304.3 Size. Turning space shall comply with 304.3.1 or 304.3.2.

304.3.1 Circular Space. The turning space shall be a space of 60 inches (1525 mm) diameter minimum. The space shall be permitted to include knee and toe clearance complying with 306.

304.3.2 T-Shaped Space. The turning space shall be a T-shaped space within a 60 inch (1525 mm) square minimum with arms and base 36 inches (915 mm) wide minimum. Each arm of the T shall be clear of obstructions 12 inches (305 mm) minimum in each direction and the base shall be clear of obstructions 24 inches (610 mm) minimum. The space shall be permitted to include knee and toe clearance complying with 306 only at the end of either the base or one arm.

304.4 Door Swing. Doors shall be permitted to swing into turning spaces.

305 CLEAR FLOOR OR GROUND SPACE

305.1 General. Clear floor or ground space shall comply with 305.

305.2 Floor or Ground Surfaces. Floor or ground surfaces of a clear floor or ground space shall comply with 302. Changes in level are not permitted.

EXCEPTION: Slopes not steeper than 1:48 shall be permitted.

305.3 Size. The clear floor or ground space shall be 30 inches (760 mm) minimum by 48 inches (1220 mm) minimum.

305.4 Knee and Toe Clearance. Unless otherwise specified, clear floor or ground space shall be permitted to include knee and toe clearance complying with 306.

305.5 Position. Unless otherwise specified, clear floor or ground space shall be positioned for either forward or parallel approach to an element.

305.6 Approach. One full unobstructed side of the clear floor or ground space shall adjoin an accessible route or adjoin another clear floor or ground space.

305.7 Maneuvering Clearance. Where a clear floor or ground space is located in an alcove or otherwise confined on all or part of three sides, additional maneuvering clearance shall be provided in accordance with 305.7.1 and 305.7.2.

305.7.1 Forward Approach. Alcoves shall be 36 inches (915 mm) wide minimum where the depth exceeds 24 inches (610 mm).

305.7.2 Parallel Approach. Alcoves shall be 60 inches (1525 mm) wide minimum where the depth exceeds 15 inches (380 mm).

306 Knee and Toe Clearance

306.1 General. Where space beneath an element is included as part of clear floor or ground space or turning space, the space shall comply with 306. Additional space shall not be prohibited beneath an element but shall not be considered as part of the clear floor or ground space or turning space.

306.2 Toe Clearance.

306.2.1 General. Space under an element between the finish floor or ground and 9 inches (230 mm) above the finish floor or ground shall be considered toe clearance and shall comply with 306.2.

306.2.2 Maximum Depth. Toe clearance shall extend 25 inches (635 mm) maximum under an element.

306.2.3 Minimum Required Depth. Where toe clearance is required at an element as part of a clear floor space, the toe clearance shall extend 17 inches (430 mm) minimum under the element.

306.2.4 Additional Clearance. Space extending greater than 6 inches (150 mm) beyond the available knee clearance at 9 inches (230 mm) above the finish floor or ground shall not be considered toe clearance.

306.2.5 Width. Toe clearance shall be 30 inches (760 mm) wide minimum.

306.3 Knee Clearance.

306.3.1 General. Space under an element between 9 inches (230 mm) and 27 inches (685 mm) above the finish floor or ground shall be considered knee clearance and shall comply with 306.3.

306.3.2 Maximum Depth. Knee clearance shall extend 25 inches (635 mm) maximum under an element at 9 inches (230 mm) above the finish floor or ground.

306.3.3 Minimum Required Depth. Where knee clearance is required under an element as part of a clear floor space, the knee clearance shall be 11 inches (280 mm) deep minimum at 9 inches (230 mm) above the finish floor or ground, and 8 inches (205 mm) deep minimum at 27 inches (685 mm) above the finish floor or ground.

306.3.4 Clearance Reduction. Between 9 inches (230 mm) and 27 inches (685 mm) above the finish floor or ground, the knee clearance shall be permitted to reduce at a rate of 1 inch (25 mm) in depth for each 6 inches (150 mm) in height.

306.3.5 Width. Knee clearance shall be 30 inches (760 mm) wide minimum.

307 Protruding Objects

307.1 General. Protruding objects shall comply with 307.

307.2 Protrusion Limits. Objects with leading edges more than 27 inches (685 mm) and not more than 80 inches (2030 mm) above the finish floor or ground shall protrude 4 inches (100 mm) maximum horizontally into the circulation path.

Exception: Handrails shall be permitted to protrude 4½ inches (115 mm) maximum.

307.3 Post-Mounted Objects. Freestanding objects mounted on posts or pylons shall overhang circulation paths 12 inches (305 mm) maximum when located 27 inches (685 mm) minimum and 80 inches (2030 mm) maximum above the finish floor or ground. Where a sign or other obstruction is mounted between posts or pylons and the clear distance between the posts or pylons is greater than 12 inches (305 mm), the lowest edge of such sign or obstruction shall be 27 inches (685 mm) maximum or 80 inches (2030 mm) minimum above the finish floor or ground.

Exception: The sloping portions of handrails serving stairs and ramps shall not be required to comply with 307.3.

307.4 Vertical Clearance. Vertical clearance shall be 80 inches (2030 mm) high minimum. Guardrails or other barriers shall be provided where the vertical clearance is less than 80 inches (2030 mm) high. The leading edge of such guardrail or barrier shall be located 27 inches (685 mm) maximum above the finish floor or ground.

Exception: Door closers and door stops shall be permitted to be 78 inches (1980 mm) minimum above the finish floor or ground.

307.5 Required Clear Width. Protruding objects shall not reduce the clear width required for accessible routes.

308 Reach Ranges

308.1 General. Reach ranges shall comply with 308.

308.2 Forward Reach.

308.2.1 Unobstructed. Where a forward reach is unobstructed, the high forward reach shall be 48 inches (1220 mm) maximum and the low forward reach shall be 15 inches (380 mm) minimum above the finish floor or ground.

308.2.2 Obstructed High Reach. Where a high forward reach is over an obstruction, the clear floor space shall extend beneath the element for a distance not less than the required reach depth over the obstruction. The high forward reach shall be 48 inches (1220 mm) maximum where the reach depth is 20 inches (510 mm) maximum. Where the reach depth exceeds 20 inches (510 mm), the high forward reach shall be 44 inches (1120 mm) maximum and the reach depth shall be 25 inches (635 mm) maximum.

308.3 Side Reach.

308.3.1 Unobstructed. Where a clear floor or ground space allows a parallel approach to an element and the side reach is unobstructed, the high side reach shall be 48 inches (1220 mm) maximum and the low side

reach shall be 15 inches (380 mm) minimum above the finish floor or ground.

EXCEPTIONS: 1. An obstruction shall be permitted between the clear floor or ground space and the element where the depth of the obstruction is 10 inches (255 mm) maximum.

2. Operable parts of fuel dispensers shall be permitted to be 54 inches (1370 mm) maximum measured from the surface of the vehicular way where fuel dispensers are installed on existing curbs.

308.3.2 Obstructed High Reach. Where a clear floor or ground space allows a parallel approach to an element and the high side reach is over an obstruction, the height of the obstruction shall be 34 inches (865 mm) maximum and the depth of the obstruction shall be 24 inches (610 mm) maximum. The high side reach shall be 48 inches (1220 mm) maximum for a reach depth of 10 inches (255 mm) maximum. Where the reach depth exceeds 10 inches (255 mm), the high side reach shall be 46 inches (1170 mm) maximum for a reach depth of 24 inches (610 mm) maximum.

EXCEPTIONS: 1. The top of washing machines and clothes dryers shall be permitted to be 36 inches (915 mm) maximum above the finish floor.

2. Operable parts of fuel dispensers shall be permitted to be 54 inches (1370 mm) maximum measured from the surface of the vehicular way where fuel dispensers are installed on existing curbs.

309 OPERABLE PARTS

309.1 General. Operable parts shall comply with 309.

309.2 Clear Floor Space. A clear floor or ground space complying with 305 shall be provided.

309.3 Height. Operable parts shall be placed within one or more of the reach ranges specified in 308.

309.4 Operation. Operable parts shall be operable with one hand and shall not require tight grasping, pinching, or twisting of the wrist. The force required to activate operable parts shall be 5 pounds (22.2 N) maximum.

EXCEPTION: Gas pump nozzles shall not be required to provide operable parts that have an activating force of 5 pounds (22.2 N) maximum.

CHAPTER 4: ACCESSIBLE ROUTES

401 GENERAL

401.1 Scope. The provisions of Chapter 4 shall apply where required by Chapter 2 or where referenced by a requirement in this document.

402 ACCESSIBLE ROUTES

402.1 General. Accessible routes shall comply with 402.

402.2 Components. Accessible routes shall consist of one or more of the following components: walking surfaces with a running slope not steeper than 1:20, doorways, ramps, curb ramps excluding the flared sides, elevators, and platform lifts. All components of an accessible route shall comply with the applicable requirements of Chapter 4.

403 WALKING SURFACES

403.1 General. Walking surfaces that are a part of an accessible route shall comply with 403.

403.2 Floor or Ground Surface. Floor or ground surfaces shall comply with 302.

403.3 Slope. The running slope of walking surfaces shall not be steeper than 1:20. The cross slope of walking surfaces shall not be steeper than 1:48.

403.4 Changes in Level. Changes in level shall comply with 303.

403.5 Clearances. Walking surfaces shall provide clearances complying with 403.5.

EXCEPTION: Within employee work areas, clearances on common use circulation paths shall be permitted to be decreased by work area equipment provided that the decrease is essential to the function of the work being performed.

403.5.1 Clear Width. Except as provided in 403.5.2 and 403.5.3, the clear width of walking surfaces shall be 36 inches (915 mm) minimum.

EXCEPTION: The clear width shall be permitted to be reduced to 32 inches (815 mm) minimum for a length of 24 inches (610 mm) maximum provided that reduced width segments are separated by segments that are 48 inches (1220 mm) long minimum and 36 inches (915 mm) wide minimum.

403.5.2 Clear Width at Turn. Where the accessible route makes a 180 degree turn around an element which is less than 48 inches (1220 mm) wide, clear width shall be 42 inches (1065 mm) minimum approaching the turn, 48 inches (1220 mm) minimum at the turn and 42 inches (1065 mm) minimum leaving the turn.

EXCEPTION: Where the clear width at the turn is 60 inches (1525 mm) minimum compliance with 403.5.2 shall not be required.

403.5.3 Passing Spaces. An accessible route with a clear width less than 60 inches (1525 mm) shall provide passing spaces at intervals of 200 feet (61 m) maximum. Passing spaces shall be either: a space 60 inches (1525 mm) minimum by 60 inches (1525 mm) minimum; or, an intersection of two walking surfaces providing a T-shaped space complying with 304.3.2 where the base and arms of the T-shaped space extend 48 inches (1220 mm) minimum beyond the intersection.

403.6 Handrails. Where handrails are provided along walking surfaces with running slopes not steeper than 1:20 they shall comply with 505.

404 DOORS, DOORWAYS, AND GATES

404.1 General. Doors, doorways, and gates that are part of an accessible route shall comply with 404.

EXCEPTION: Doors, doorways, and gates designed to be operated only by security personnel shall not be required to comply with 404.2.7, 404.2.8, 404.2.9, 404.3.2 and 404.3.4 through 404.3.7.

404.2 Manual Doors, Doorways, and Manual Gates. Manual doors and doorways and manual gates intended for user passage shall comply with 404.2.

404.2.1 Revolving Doors, Gates, and Turnstiles. Revolving doors, revolving gates, and turnstiles shall not be part of an accessible route.

404.2.2 Double-Leaf Doors and Gates. At least one of the active leaves of doorways with two leaves shall comply with 404.2.3 and 404.2.4.

404.2.3 Clear Width. Door openings shall provide a clear width of 32 inches (815 mm) minimum. Clear openings of doorways with swinging doors shall be measured between the face of the door and the stop, with the door open 90 degrees. Openings more than 24 inches (610 mm) deep shall provide a clear opening of 36 inches (915 mm) minimum. There shall be no projections into the required clear opening width lower than 34 inches (865 mm) above the finish floor or ground. Projections into the clear opening width between 34 inches (865 mm) and 80 inches (2030 mm) above the finish floor or ground shall not exceed 4 inches (100 mm).

EXCEPTIONS: 1. In alterations, a projection of ⅝ inch (16 mm) maximum into the required clear width shall be permitted for the latch side stop.

2. Door closers and door stops shall be permitted to be 78 inches (1980 mm) minimum above the finish floor or ground.

404.2.4 Maneuvering Clearances. Minimum maneuvering clearances at doors and gates shall comply with 404.2.4. Maneuvering clearances shall extend the full width of the doorway and the required latch side or hinge side clearance.

EXCEPTION: Entry doors to hospital patient rooms shall not be required to provide the clearance beyond the latch side of the door.

404.2.4.1 Swinging Doors and Gates. Swinging doors and gates shall have maneuvering clearances complying with Table 404.2.4.1.

TABLE 404.2.4.1—MANEUVERING CLEARANCES AT MANUAL SWINGING DOORS AND GATES

Type of use		Minimum maneuvering clearance	
Approach direction	Door or gate side	Perpendicular to doorway	Parallel to doorway (beyond latch side unless noted)
From front	Pull	60 inches (1525 mm)	18 inches (455 mm).
From front	Push	48 inches (1220 mm)	0 inches (0 mm).[1]
From hinge side	Pull	60 inches (1525 mm)	36 inches (915 mm).
From hinge side	Pull	54 inches (1370 mm)	42 inches (1065 mm).
From hinge side	Push	42 inches (1065 mm)[2]	22 inches (560 mm).[3]
From latch side	Pull	48 inches (1220 mm)[4]	24 inches (610 mm).
From latch side	Push	42 inches (1065 mm)[4]	24 inches (610 mm).

[1] Add 12 inches (305 mm) if closer and latch are provided.
[2] Add 6 inches (150 mm) if closer and latch are provided.
[3] Beyond hinge side.
[4] Add 6 inches (150 mm) if closer is provided.

404.2.4.2 Doorways without Doors or Gates, Sliding Doors, and Folding Doors. Doorways less than 36 inches (915 mm) wide without doors or gates, sliding doors, or folding doors shall have maneuvering clearances complying with Table 404.2.4.2.

TABLE 404.2.4.2—MANEUVERING CLEARANCES AT DOORWAYS WITHOUT DOORS OR GATES, MANUAL SLIDING DOORS, AND MANUAL FOLDING DOORS

Approach direction	Minimum maneuvering clearance	
	Perpendicular to doorway	Parallel to doorway (beyond stop/latch side unless noted)
From Front	48 inches (1220 mm)	0 inches (0 mm).
From side[1]	42 inches (1065 mm)	0 inches (0 mm).
From pocket/hinge side	42 inches (1065 mm)	22 inches (560 mm).[2]
From stop/latch side	42 inches (1065 mm)	24 inches (610 mm).

[1] Doorway with no door only.
[2] Beyond pocket/hinge side.

404.2.4.3 Recessed Doors and Gates. Maneuvering clearances for forward approach shall be provided when any obstruction within 18 inches (455 mm) of the latch side of a doorway projects more than 8 inches (205 mm) beyond the face of the door, measured perpendicular to the face of the door or gate.

404.2.4.4 Floor or Ground Surface. Floor or ground surface within required maneuvering clearances shall comply with 302. Changes in level are not permitted.

EXCEPTIONS: 1. Slopes not steeper than 1:48 shall be permitted.

2. Changes in level at thresholds complying with 404.2.5 shall be permitted.

404.2.5 Thresholds. Thresholds, if provided at doorways, shall be ½ inch (13 mm) high maximum. Raised thresholds and changes in level at doorways shall comply with 302 and 303.

EXCEPTION: Existing or altered thresholds ¾ inch (19 mm) high maximum that have a beveled edge on each side with a slope not steeper than 1:2 shall not be required to comply with 404.2.5.

404.2.6 Doors in Series and Gates in Series. The distance between two hinged or pivoted doors in series and gates in series shall be 48 inches (1220 mm) minimum plus the width of doors or gates swinging into the space.

404.2.7 Door and Gate Hardware. Handles, pulls, latches, locks, and other operable parts on doors and gates shall comply with 309.4. Operable parts of such hardware shall be 34 inches (865 mm) minimum and 48 inches (1220 mm) maximum above the finish floor or ground. Where sliding doors are in the fully open position, operating hardware shall be exposed and usable from both sides.

EXCEPTIONS: 1. Existing locks shall be permitted in any location at existing glazed doors without stiles, existing overhead rolling doors or grilles, and similar existing doors or grilles that are designed with locks that are activated only at the top or bottom rail.

2. Access gates in barrier walls and fences protecting pools, spas, and hot tubs shall be permitted to have operable parts of the release of latch on self-latching devices at 54 inches (1370 mm) maximum above the finish floor or ground provided the self-latching devices are not also self-locking devices and operated by means of a key, electronic opener, or integral combination lock.

404.2.8 Closing Speed. Door and gate closing speed shall comply with 404.2.8.

404.2.8.1 Door Closers and Gate Closers. Door closers and gate closers shall be adjusted so that from an open position of 90 degrees, the time required to move the door to a position of 12 degrees from the latch is 5 seconds minimum.

404.2.8.2 Spring Hinges. Door and gate spring hinges shall be adjusted so that from the open position of 70 degrees, the door or gate shall move to the closed position in 1.5 seconds minimum.

404.2.9 Door and Gate Opening Force. Fire doors shall have a minimum opening force allowable by the appropriate administrative authority. The force for pushing or pulling open a door or gate other than fire doors shall be as follows:

1. Interior hinged doors and gates: 5 pounds (22.2 N) maximum.

2. Sliding or folding doors: 5 pounds (22.2 N) maximum.

These forces do not apply to the force required to retract latch bolts or disengage other devices that hold the door or gate in a closed position.

404.2.10 Door and Gate Surfaces. Swinging door and gate surfaces within 10 inches (255 mm) of the finish floor or ground measured vertically shall have a smooth surface on the push side extending the full width of the door or gate. Parts creating horizontal or vertical joints in these surfaces shall be within 1/16 inch (1.6 mm) of the same plane as the other. Cavities created by added kick plates shall be capped.

EXCEPTIONS: 1. Sliding doors shall not be required to comply with 404.2.10.

2. Tempered glass doors without stiles and having a bottom rail or shoe with the top leading edge tapered at 60 degrees minimum from the horizontal shall not be required to meet the 10 inch (255 mm) bottom smooth surface height requirement.

3. Doors and gates that do not extend to within 10 inches (255 mm) of the finish floor or ground shall not be required to comply with 404.2.10.

4. Existing doors and gates without smooth surfaces within 10 inches (255 mm) of the finish floor or ground shall not be required to provide smooth surfaces complying with 404.2.10 provided that if added kick plates are installed, cavities created by such kick plates are capped.

404.2.11 Vision Lights. Doors, gates, and side lights adjacent to doors or gates, containing one or more glazing panels that permit viewing through the panels shall have the bottom of at least one glazed panel located 43 inches (1090 mm) maximum above the finish floor.

EXCEPTION: Vision lights with the lowest part more than 66 inches (1675 mm) from the finish floor or ground shall not be required to comply with 404.2.11.

404.3 Automatic and Power-Assisted Doors and Gates. Automatic doors and automatic gates shall comply with 404.3. Full-powered automatic doors shall comply with ANSI/BHMA A156.10 (incorporated by reference, see ''Referenced Standards'' in Chapter 1). Low-energy and power-assisted doors shall comply with ANSI/BHMA A156.19 (1997 or 2002 edition) (incorporated by reference, see ''Referenced Standards'' in Chapter 1).

404.3.1 Clear Width. Doorways shall provide a clear opening of 32 inches (815 mm) minimum in power-on and power-off mode. The minimum clear width for automatic door systems in a doorway shall be based on the clear opening provided by all leaves in the open position.

404.3.2 Maneuvering Clearance. Clearances at power-assisted doors and gates shall comply with 404.2.4. Clearances at automatic doors and gates without standby power and serving an accessible means of egress shall comply with 404.2.4.

EXCEPTION: Where automatic doors and gates remain open in the power-off condition, compliance with 404.2.4 shall not be required.

404.3.3 Thresholds. Thresholds and changes in level at doorways shall comply with 404.2.5.

404.3.4 Doors in Series and Gates in Series. Doors in series and gates in series shall comply with 404.2.6.

404.3.5 Controls. Manually operated controls shall comply with 309. The clear floor space adjacent to the control shall be located beyond the arc of the door swing.

404.3.6 Break Out Opening. Where doors and gates without standby power are a part of a means of egress, the clear break out opening at swinging or sliding doors and gates shall be 32 inches (815 mm) minimum when operated in emergency mode.

EXCEPTION: Where manual swinging doors and gates comply with 404.2 and serve the same means of egress compliance with 404.3.6 shall not be required.

404.3.7 Revolving Doors, Revolving Gates, and Turnstiles. Revolving doors, revolving gates, and turnstiles shall not be part of an accessible route.

405 RAMPS

405.1 General. Ramps on accessible routes shall comply with 405.

EXCEPTION: In assembly areas, aisle ramps adjacent to seating and not serving elements required to be on an accessible route shall not be required to comply with 405.

405.2 Slope. Ramp runs shall have a running slope not steeper than 1:12.

EXCEPTIONS: 1. In existing sites, buildings, and facilities, ramps shall be permitted to have running slopes steeper than 1:12 complying with Table 405.2 where such slopes are necessary due to space limitations.

2. For emergency transportable housing units installed on private sites provided by the occupant of the unit, where existing physical or site constraints prohibit the installation of an entry ramp complying with 405.2, ramps shall be permitted to provide a single ramp run with a slope no steeper than 1:10 provided that the maximum rise of all ramp runs serving the unit entrance is not greater than 36 inches (915 mm).

TABLE 405.2—MAXIMUM RAMP SLOPE AND RISE FOR EXISTING SITES, BUILDINGS, AND FACILITIES

Slope [1]	Maximum rise
Steeper than 1:10 but not steeper than 1:8.	3 inches (75 mm).
Steeper than 1:12 but not steeper than 1:10.	6 inches (150 mm).

[1] A slope steeper than 1:8 is prohibited.

405.3 Cross Slope. Cross slope of ramp runs shall not be steeper than 1:48.

405.4 Floor or Ground Surfaces. Floor or ground surfaces of ramp runs shall comply with 302. Changes in level other than the running slope and cross slope are not permitted on ramp runs.

405.5 Clear Width. The clear width of a ramp run and, where handrails are provided, the clear width between handrails shall be 36 inches (915 mm) minimum.

EXCEPTION: Within employee work areas, the required clear width of ramps that are a part of common use circulation paths shall be permitted to be decreased by work area equipment provided that the decrease is essential to the function of the work being performed.

405.6 Rise. The rise for any ramp run shall be 30 inches (760 mm) maximum.

EXCEPTION: For emergency transportable housing units installed on private sites provided by the occupant of the unit, where existing physical or site constraints prohibit the installation of an entry ramp complying with 405.6, ramps shall be permitted to provide a single ramp run with a rise 36 inches (915 mm) maximum.

405.7 Landings. Ramps shall have landings at the top and the bottom of each ramp run. Landings shall comply with 405.7.

405.7.1 Slope. Landings shall comply with 302. Changes in level are not permitted.

EXCEPTION: Slopes not steeper than 1:48 shall be permitted.

405.7.2 Width. The landing clear width shall be at least as wide as the widest ramp run leading to the landing.

405.7.3 Length. The landing clear length shall be 60 inches (1525 mm) long minimum.

405.7.4 Change in Direction. Ramps that change direction between runs at landings shall have a clear landing 60 inches (1525 mm) minimum by 60 inches (1525 mm) minimum.

405.7.5 Doorways. Where doorways are located adjacent to a ramp landing, maneuvering clearances required by 404.2.4 and 404.3.2 shall be permitted to overlap the required landing area.

405.8 Handrails. Ramp runs with a rise greater than 6 inches (150 mm) shall have handrails complying with 505.

EXCEPTION: Within employee work areas, handrails shall not be required where ramps that are part of common use circulation paths are designed to permit the installation

of handrails complying with 505. Ramps not subject to the exception to 405.5 shall be designed to maintain a 36 inch (915 mm) minimum clear width when handrails are installed.

405.9 Edge Protection. Edge protection complying with 405.9.1 or 405.9.2 shall be provided on each side of ramp runs and at each side of ramp landings.

EXCEPTIONS: 1. Edge protection shall not be required on ramps that are not required to have handrails and have sides complying with 406.3.

2. Edge protection shall not be required on the sides of ramp landings serving an adjoining ramp run or stairway.

3. Edge protection shall not be required on the sides of ramp landings having a vertical drop-off of ½ inch (13 mm) maximum within 10 inches (255 mm) horizontally of the minimum landing area specified in 405.7.

405.9.1 Extended Floor or Ground Surface. The floor or ground surface of the ramp run or landing shall extend 12 inches (305 mm) minimum beyond the inside face of a handrail complying with 505.

405.9.2 Curb or Barrier. A curb or barrier shall be provided that prevents the passage of a 4 inch (100 mm) diameter sphere, where any portion of the sphere is within 4 inches (100 mm) of the finish floor or ground surface.

405.10 Wet Conditions. Landings subject to wet conditions shall be designed to prevent the accumulation of water.

406 CURB RAMPS

406.1 General. Curb ramps on accessible routes shall comply with 406, 405.2 through 405.5, and 405.10.

406.2 Counter Slope. Counter slopes of adjoining gutters and road surfaces immediately adjacent to the curb ramp shall not be steeper than 1:20. The adjacent surfaces at transitions at curb ramps to walks, gutters, and streets shall be at the same level.

406.3 Sides of Curb Ramps. Where provided, curb ramp flares shall not be steeper than 1:10.

406.4 Landings. Landings shall be provided at the tops of curb ramps. The landing clear length shall be 36 inches (915 mm) minimum. The landing clear width shall be at least as wide as the curb ramp, excluding flared sides, leading to the landing.

EXCEPTION: In alterations, where there is no landing at the top of curb ramps, curb ramp flares shall be provided and shall not be steeper than 1:12.

406.5 Location. Curb ramps and the flared sides of curb ramps shall be located so that they do not project into vehicular traffic lanes, parking spaces, or parking access aisles. Curb ramps at marked crossings shall be wholly contained within the markings, excluding any flared sides.

406.6 Diagonal Curb Ramps. Diagonal or corner type curb ramps with returned curbs or other well-defined edges shall have the edges parallel to the direction of pedestrian flow. The bottom of diagonal curb ramps shall have a clear space 48 inches (1220 mm) minimum outside active traffic lanes of the roadway. Diagonal curb ramps provided at marked crossings shall provide the 48 inches (1220 mm) minimum clear space within the markings. Diagonal curb ramps with flared sides shall have a segment of curb 24 inches (610 mm) long minimum located on each side of the curb ramp and within the marked crossing.

406.7 Islands. Raised islands in crossings shall be cut through level with the street or have curb ramps at both sides. Each curb ramp shall have a level area 48 inches (1220 mm) long minimum by 36 inches (915 mm) wide minimum at the top of the curb ramp in the part of the island intersected by the crossings. Each 48 inch (1220 mm) minimum by 36 inch (915 mm) minimum area shall be oriented so that the 48 inch (1220 mm) minimum length is in the direction of the running slope of the curb ramp it serves. The 48 inch (1220 mm) minimum by 36 inch (915 mm) minimum areas and the accessible route shall be permitted to overlap.

407 ELEVATORS

407.1 General. Elevators shall comply with 407 and with ASME A17.1 (incorporated by reference, see ''Referenced Standards'' in Chapter 1). They shall be passenger elevators as classified by ASME A17.1. Elevator operation shall be automatic.

407.2 Elevator Landing Requirements. Elevator landings shall comply with 407.2.

407.2.1 Call Controls. Where elevator call buttons or keypads are provided, they shall comply with 407.2.1 and 309.4. Call buttons shall be raised or flush.

EXCEPTION: Existing elevators shall be permitted to have recessed call buttons.

407.2.1.1 Height. Call buttons and keypads shall be located within one of the reach ranges specified in 308, measured to the centerline of the highest operable part.

EXCEPTION: Existing call buttons and existing keypads shall be permitted to be located at 54 inches (1370 mm) maximum above the finish floor, measured to the centerline of the highest operable part.

407.2.1.2 Size. Call buttons shall be ¾ inch (19 mm) minimum in the smallest dimension.

EXCEPTION: Existing elevator call buttons shall not be required to comply with 407.2.1.2.

407.2.1.3 Clear Floor or Ground Space. A clear floor or ground space complying with 305 shall be provided at call controls.

407.2.1.4 Location. The call button that designates the up direction shall be located above the call button that designates the down direction.

EXCEPTION: Destination-oriented elevators shall not be required to comply with 407.2.1.4.

407.2.1.5 Signals. Call buttons shall have visible signals to indicate when each call is registered and when each call is answered.

EXCEPTIONS: 1. Destination-oriented elevators shall not be required to comply with 407.2.1.5 provided that visible and audible signals complying with 407.2.2 indicating which elevator car to enter are provided.

2. Existing elevators shall not be required to comply with 407.2.1.5.

407.2.1.6 Keypads. Where keypads are provided, keypads shall be in a standard telephone keypad arrangement and shall comply with 407.4.7.2.

407.2.2 Hall Signals. Hall signals, including in-car signals, shall comply with 407.2.2.

407.2.2.1 Visible and Audible Signals. A visible and audible signal shall be provided at each hoistway entrance to indicate which car is answering a call and the car's direction of travel. Where in-car signals are provided, they shall be visible from the floor area adjacent to the hall call buttons.

EXCEPTIONS: 1. Visible and audible signals shall not be required at each destination-oriented elevator where a visible and audible signal complying with 407.2.2 is provided indicating the elevator car designation information.

2. In existing elevators, a signal indicating the direction of car travel shall not be required.

407.2.2.2 Visible Signals. Visible signal fixtures shall be centered at 72 inches (1830 mm) minimum above the finish floor or ground. The visible signal elements shall be 2½ inches (64 mm) minimum measured along the vertical centerline of the element. Signals shall be visible from the floor area adjacent to the hall call button.

EXCEPTIONS: 1. Destination-oriented elevators shall be permitted to have signals visible from the floor area adjacent to the hoistway entrance.

2. Existing elevators shall not be required to comply with 407.2.2.2.

407.2.2.3 Audible Signals. Audible signals shall sound once for the up direction and twice for the down direction, or shall have verbal annunciators that indicate the direction of elevator car travel. Audible signals shall have a frequency of 1500 Hz maximum. Verbal annunciators shall have a frequency of 300 Hz minimum and 3000 Hz maximum. The audible signal and verbal annunciator shall be 10 dB minimum above ambient, but shall not exceed 80 dB, measured at the hall call button.

EXCEPTIONS: 1. Destination-oriented elevators shall not be required to comply with 407.2.2.3 provided that the audible tone and verbal announcement is the same as those given at the call button or call button keypad.

2. Existing elevators shall not be required to comply with the requirements for frequency and dB range of audible signals.

407.2.2.4 Differentiation. Each destination-oriented elevator in a bank of elevators shall have audible and visible means for differentiation.

407.2.3 Hoistway Signs. Signs at elevator hoistways shall comply with 407.2.3.

407.2.3.1 Floor Designation. Floor designations complying with 703.2 and 703.4.1 shall be provided on both jambs of elevator hoistway entrances. Floor designations shall be provided in both tactile characters and braille. Tactile characters shall be 2 inches (51 mm) high minimum. A tactile star shall be provided on both jambs at the main entry level.

407.2.3.2 Car Designations. Destination-oriented elevators shall provide tactile car identification complying with 703.2 on both jambs of the hoistway immediately below the floor designation. Car designations shall be provided in both tactile characters and braille. Tactile characters shall be 2 inches (51 mm) high minimum.

407.3 Elevator Door Requirements. Hoistway and car doors shall comply with 407.3.

407.3.1 Type. Elevator doors shall be the horizontal sliding type. Car gates shall be prohibited.

407.3.2 Operation. Elevator hoistway and car doors shall open and close automatically.

EXCEPTION: Existing manually operated hoistway swing doors shall be permitted provided that they comply with 404.2.3 and 404.2.9. Car door closing shall not be initiated until the hoistway door is closed.

407.3.3 Reopening Device. Elevator doors shall be provided with a reopening device complying with 407.3.3 that shall stop and reopen a car door and hoistway door automatically if the door becomes obstructed by an object or person.

EXCEPTION: Existing elevators with manually operated doors shall not be required to comply with 407.3.3.

407.3.3.1 Height. The device shall be activated by sensing an obstruction passing through the opening at 5 inches (125 mm) nominal and 29 inches (735 mm) nominal above the finish floor.

407.3.3.2 Contact. The device shall not require physical contact to be activated, although contact is permitted to occur before the door reverses.

407.3.3.3 Duration. Door reopening devices shall remain effective for 20 seconds minimum.

407.3.4 Door and Signal Timing. The minimum acceptable time from notification that a car is answering a call or notification of the car assigned at the means for the entry of destination information until the doors of that car start to close shall be calculated from the following equation: $T = D/(1.5\ ft/s)$

or T = D/(455 mm/s) = 5 seconds minimum where T equals the total time in seconds and D equals the distance (in feet or millimeters) from the point in the lobby or corridor 60 inches (1525 mm) directly in front of the farthest call button controlling that car to the centerline of its hoistway door.

EXCEPTIONS: 1. For cars with in-car lanterns, T shall be permitted to begin when the signal is visible from the point 60 inches (1525 mm) directly in front of the farthest hall call button and the audible signal is sounded.

2. Destination-oriented elevators shall not be required to comply with 407.3.4.

407.3.5 Door Delay. Elevator doors shall remain fully open in response to a car call for 3 seconds minimum.

407.3.6 Width. The width of elevator doors shall comply with Table 407.4.1.

EXCEPTION: In existing elevators, a power-operated car door complying with 404.2.3 shall be permitted.

407.4 Elevator Car Requirements. Elevator cars shall comply with 407.4.

407.4.1 Car Dimensions. Inside dimensions of elevator cars and clear width of elevator doors shall comply with Table 407.4.1.

EXCEPTION: Existing elevator car configurations that provide a clear floor area of 16 square feet (1.5 m2) minimum and also provide an inside clear depth 54 inches (1370 mm) minimum and a clear width 36 inches (915 mm) minimum shall be permitted.

TABLE 407.4.1—ELEVATOR CAR DIMENSIONS

Door location	Minimum dimensions			
	Door clear width	Inside car, side to side	Inside car, back wall to front return	Inside car, back wall to inside face of door
Centered	42 inches (1065 mm)	80 inches (2030 mm)	51 inches (1295 mm)	54 inches (1370 mm).
Side (off-centered)	36 inches (915 mm)[1]	68 inches (1725 mm)	51 inches (1295 mm)	54 inches (1370 mm).
Any	36 inches (915 mm)[1]	54 inches (1370 mm)	80 inches (2030 mm)	80 inches (2030 mm).
Any	36 inches (915 mm)[1]	60 inches (1525 mm)[2]	60 inches (1525 mm)[2]	60 inches (1525 mm).[2]

[1] A tolerance of minus 5/8 inch (16 mm) is permitted.
[2] Other car configurations that provide a turning space complying with 304 with the door closed shall be permitted.

407.4.2 Floor Surfaces. Floor surfaces in elevator cars shall comply with 302 and 303.

407.4.3 Platform to Hoistway Clearance. The clearance between the car platform sill and the edge of any hoistway landing shall be 1¼; inch (32 mm) maximum.

407.4.4 Leveling. Each car shall be equipped with a self-leveling feature that will automatically bring and maintain the car at floor landings within a tolerance of ½ inch (13 mm) under rated loading to zero loading conditions.

407.4.5 Illumination. The level of illumination at the car controls, platform, car threshold and car landing sill shall be 5 foot candles (54 lux) minimum.

407.4.6 Elevator Car Controls. Where provided, elevator car controls shall comply with 407.4.6 and 309.4.

EXCEPTION: In existing elevators, where a new car operating panel complying with 407.4.6 is provided, existing car operating panels shall not be required to comply with 407.4.6.

407.4.6.1 Location. Controls shall be located within one of the reach ranges specified in 308.

EXCEPTIONS: 1. Where the elevator panel serves more than 16 openings and a parallel approach is provided, buttons with floor designations shall be permitted to be 54 inches (1370 mm) maximum above the finish floor.

2. In existing elevators, car control buttons with floor designations shall be permitted to be located 54 inches (1370 mm) maximum above the finish floor where a parallel approach is provided.

407.4.6.2 Buttons. Car control buttons with floor designations shall comply with 407.4.6.2 and shall be raised or flush.

EXCEPTION: In existing elevators, buttons shall be permitted to be recessed.

407.4.6.2.1 Size. Buttons shall be ¾ inch (19 mm) minimum in their smallest dimension.

407.4.6.2.2 Arrangement. Buttons shall be arranged with numbers in ascending order. When two or more columns of buttons are provided they shall read from left to right.

407.4.6.3 Keypads. Car control keypads shall be in a standard telephone keypad arrangement and shall comply with 407.4.7.2.

407.4.6.4 Emergency Controls. Emergency controls shall comply with 407.4.6.4.

407.4.6.4.1 Height. Emergency control buttons shall have their centerlines 35 inches (890 mm) minimum above the finish floor.

407.4.6.4.2 Location. Emergency controls, including the emergency alarm, shall be grouped at the bottom of the panel.

407.4.7 Designations and Indicators of Car Controls. Designations and indicators of car controls shall comply with 407.4.7.

EXCEPTION: In existing elevators, where a new car operating panel complying with 407.4.7 is provided, existing car operating panels shall not be required to comply with 407.4.7.

407.4.7.1 Buttons. Car control buttons shall comply with 407.4.7.1.

407.4.7.1.1 Type. Control buttons shall be identified by tactile characters complying with 703.2.

407.4.7.1.2 Location. Raised character and braille designations shall be placed immediately to the left of the control button to which the designations apply.

EXCEPTION: Where space on an existing car operating panel precludes tactile markings to the left of the controls, markings shall be placed as near to the control as possible.

407.4.7.1.3 Symbols. The control button for the emergency stop, alarm, door open, door close, main entry floor, and phone shall be identified with tactile symbols as shown in Figure 407.4.7.1.3 at the end of this document.

407.4.7.1.4 Visible Indicators. Buttons with floor designations shall be provided with visible indicators to show that a call has been registered. The visible indication shall extinguish when the car arrives at the designated floor.

407.4.7.2 Keypads. Keypads shall be identified by characters complying with 703.5 and shall be centered on the corresponding keypad button. The number five key shall have a single raised dot. The dot shall be 0.118 inch (3 mm) to 0.120 inch (3.05 mm) base diameter and in other aspects comply with Table 703.3.1.

407.4.8 Car Position Indicators. Audible and visible car position indicators shall be provided in elevator cars.

407.4.8.1 Visible Indicators. Visible indicators shall comply with 407.4.8.1.

407.4.8.1.1 Size. Characters shall be ½ inch (13 mm) high minimum.

407.4.8.1.2 Location. Indicators shall be located above the car control panel or above the door.

407.4.8.1.3 Floor Arrival. As the car passes a floor and when a car stops at a floor served by the elevator, the corresponding character shall illuminate.

EXCEPTION: Destination-oriented elevators shall not be required to comply with 407.4.8.1.3 provided that the visible indicators extinguish when the call has been answered.

407.4.8.1.4 Destination Indicator. In destination-oriented elevators, a display shall be provided in the car with visible indicators to show car destinations.

407.4.8.2 Audible Indicators. Audible indicators shall comply with 407.4.8.2.

407.4.8.2.1 Signal Type. The signal shall be an automatic verbal annunciator which announces the floor at which the car is about to stop.

EXCEPTION: For elevators other than destination-oriented elevators that have a rated speed of 200 feet per minute (1 m/s) or less, a non-verbal audible signal with a frequency of 1500 Hz maximum which sounds as the car passes or is about to stop at a floor served by the elevator shall be permitted.

407.4.8.2.2 Signal Level. The verbal annunciator shall be 10 dB minimum above ambient, but shall not exceed 80 dB, measured at the annunciator.

407.4.8.2.3 Frequency. The verbal annunciator shall have a frequency of 300 Hz minimum to 3000 Hz maximum.

407.4.9 Emergency Communication. Emergency two-way communication systems shall comply with 308. Tactile symbols and characters shall be provided adjacent to the device and shall comply with 703.2.

408 LIMITED-USE/LIMITED-APPLICATION ELEVATORS

408.1 GENERAL, LIMITED-USE/LIMITED-APPLICATION ELEVATORS SHALL COMPLY WITH 408 AND WITH ASME A17.1 (INCORPORATED BY REFERENCE, SEE ''REFERENCED STANDARDS'' IN CHAPTER 1). THEY SHALL BE PASSENGER ELEVATORS AS CLASSIFIED BY ASME A17.1. ELEVATOR OPERATION SHALL BE AUTOMATIC.

408.2 Elevator Landings. Landings serving limited-use/limited-application elevators shall comply with 408.2.

408.2.1 Call Buttons. Elevator call buttons and keypads shall comply with 407.2.1.

408.2.2 Hall Signals. Hall signals shall comply with 407.2.2.

408.2.3 Hoistway Signs. Signs at elevator hoistways shall comply with 407.2.3.1.

408.3 Elevator Doors. Elevator hoistway doors shall comply with 408.3.

408.3.1 Sliding Doors. Sliding hoistway and car doors shall comply with 407.3.1 through 407.3.3 and 408.4.1.

408.3.2 Swinging Doors. Swinging hoistway doors shall open and close automatically and shall comply with 404, 407.3.2 and 408.3.2.

408.3.2.1 Power Operation. Swinging doors shall be power-operated and shall comply with ANSI/BHMA A156.19 (1997 or 2002 edition) (incorporated by reference, see ''Referenced Standards'' in Chapter 1).

408.3.2.2 Duration. Power-operated swinging doors shall remain open for 20 seconds minimum when activated.

408.4 Elevator Cars. Elevator cars shall comply with 408.4.

408.4.1 Car Dimensions and Doors. Elevator cars shall provide a clear width 42 inches (1065 mm) minimum and a clear depth 54 inches (1370 mm) minimum. Car doors shall be positioned at the narrow ends of cars and shall provide 32 inches (815 mm) minimum clear width.

EXCEPTIONS: 1. Cars that provide a clear width 51 inches (1295 mm) minimum shall be permitted to provide a clear depth 51 inches (1295 mm) minimum provided that car doors provide a clear opening 36 inches (915 mm) wide minimum.

2. Existing elevator cars shall be permitted to provide a clear width 36 inches (915 mm) minimum, clear depth 54 inches (1370 mm) minimum, and a net clear platform area 15 square feet (1.4 m^2) minimum.

408.4.2 Floor Surfaces. Floor surfaces in elevator cars shall comply with 302 and 303.

408.4.3 Platform to Hoistway Clearance. The platform to hoistway clearance shall comply with 407.4.3.

408.4.4 Leveling. Elevator car leveling shall comply with 407.4.4.

408.4.5 Illumination. Elevator car illumination shall comply with 407.4.5.

408.4.6 Car Controls. Elevator car controls shall comply with 407.4.6. Control panels shall be centered on a side wall.

408.4.7 Designations and Indicators of Car Controls. Designations and indicators of car controls shall comply with 407.4.7.

408.4.8 Emergency Communications. Car emergency signaling devices complying with 407.4.9 shall be provided.

409 Private Residence Elevators

409.1 General. Private residence elevators that are provided within a residential dwelling unit required to provide mobility features complying with 809.2 shall comply with 409 and with ASME A17.1 (incorporated by reference, see ''Referenced Standards'' in Chapter 1). They shall be passenger elevators as classified by ASME A17.1. Elevator operation shall be automatic.

409.2 Call Buttons. Call buttons shall be ¾ inch (19 mm) minimum in the smallest dimension and shall comply with 309.

409.3 Elevator Doors. Hoistway doors, car doors, and car gates shall comply with 409.3 and 404.

Exception: Doors shall not be required to comply with the maneuvering clearance requirements in 404.2.4.1 for approaches to the push side of swinging doors.

409.3.1 Power Operation. Elevator car and hoistway doors and gates shall be power operated and shall comply with ANSI/BHMA A156.19 (1997 or 2002 edition) (incorporated by reference, see ''Referenced Standards'' in Chapter 1). Power operated doors and gates shall remain open for 20 seconds minimum when activated.

Exception: In elevator cars with more than one opening, hoistway doors and gates shall be permitted to be of the manual-open, self-close type.

409.3.2 Location. Elevator car doors or gates shall be positioned at the narrow end of the clear floor spaces required by 409.4.1.

409.4 Elevator Cars. Private residence elevator cars shall comply with 409.4.

409.4.1 Inside Dimensions of Elevator Cars. Elevator cars shall provide a clear floor space of 36 inches (915 mm) minimum by 48 inches (1220 mm) minimum and shall comply with 305.

409.4.2 Floor Surfaces. Floor surfaces in elevator cars shall comply with 302 and 303.

409.4.3 Platform to Hoistway Clearance. The clearance between the car platform and the edge of any landing sill shall be 1½ inch (38 mm) maximum.

409.4.4 Leveling. Each car shall automatically stop at a floor landing within a tolerance of ½ inch (13 mm) under rated loading to zero loading conditions.

409.4.5 Illumination Levels. Elevator car illumination shall comply with 407.4.5.

409.4.6 Car Controls. Elevator car control buttons shall comply with 409.4.6, 309.3, 309.4, and shall be raised or flush.

409.4.6.1 Size. Control buttons shall be ¾ inch (19 mm) minimum in their smallest dimension.

409.4.6.2 Location. Control panels shall be on a side wall, 12 inches (305 mm) minimum from any adjacent wall.

409.4.7 Emergency Communications. Emergency two-way communication systems shall comply with 409.4.7.

409.4.7.1 Type. A telephone and emergency signal device shall be provided in the car.

409.4.7.2 Operable Parts. The telephone and emergency signaling device shall comply with 309.3 and 309.4.

409.4.7.3 Compartment. If the telephone or device is in a closed compartment, the compartment door hardware shall comply with 309.

409.4.7.4 Cord. The telephone cord shall be 29 inches (735 mm) long minimum.

410 Platform Lifts

410.1 General. Platform lifts shall comply with ASME A18.1 (1999 edition or 2003 edition) (incorporated by reference, see ''Referenced Standards'' in Chapter 1). Platform lifts shall not be attendant operated and shall provide unassisted entry and exit from the lift.

410.2 Floor Surfaces. Floor surfaces in platform lifts shall comply with 302 and 303.

410.3 Clear Floor Space. Clear floor space in platform lifts shall comply with 305.

410.4 Platform to Runway Clearance. The clearance between the platform sill and the edge of any runway landing shall be 1¼ inch (32 mm) maximum.

410.5 Operable Parts. Controls for platform lifts shall comply with 309.

410.6 Doors and Gates. Platform lifts shall have low-energy power operated doors or gates complying with 404.3. Doors shall remain open for 20 seconds minimum. End doors and gates shall provide a clear width 32 inches (815 mm) minimum. Side doors and gates shall provide a clear width 42 inches (1065 mm) minimum.

Exception: Platform lifts serving two landings maximum and having doors or gates on opposite sides shall be permitted to have self-closing manual doors or gates.

Chapter 5: General Site and Building Elements

501 General

501.1 Scope. The provisions of Chapter 5 shall apply where required by Chapter 2 or

where referenced by a requirement in this document.

502 PARKING SPACES

502.1 General. Car and van parking spaces shall comply with 502. Where parking spaces are marked with lines, width measurements of parking spaces and access aisles shall be made from the centerline of the markings.

EXCEPTION: Where parking spaces or access aisles are not adjacent to another parking space or access aisle, measurements shall be permitted to include the full width of the line defining the parking space or access aisle.

502.2 Vehicle Spaces. Car parking spaces shall be 96 inches (2440 mm) wide minimum and van parking spaces shall be 132 inches (3350 mm) wide minimum, shall be marked to define the width, and shall have an adjacent access aisle complying with 502.3.

EXCEPTION: Van parking spaces shall be permitted to be 96 inches (2440 mm) wide minimum where the access aisle is 96 inches (2440 mm) wide minimum.

502.3 Access Aisle. Access aisles serving parking spaces shall comply with 502.3. Access aisles shall adjoin an accessible route. Two parking spaces shall be permitted to share a common access aisle.

502.3.1 Width. Access aisles serving car and van parking spaces shall be 60 inches (1525 mm) wide minimum.

502.3.2 Length. Access aisles shall extend the full length of the parking spaces they serve.

502.3.3 Marking. Access aisles shall be marked so as to discourage parking in them.

502.3.4 Location. Access aisles shall not overlap the vehicular way. Access aisles shall be permitted to be placed on either side of the parking space except for angled van parking spaces which shall have access aisles located on the passenger side of the parking spaces.

502.4 Floor or Ground Surfaces. Parking spaces and access aisles serving them shall comply with 302. Access aisles shall be at the same level as the parking spaces they serve. Changes in level are not permitted.

EXCEPTION: Slopes not steeper than 1:48 shall be permitted.

502.5 Vertical Clearance. Parking spaces for vans and access aisles and vehicular routes serving them shall provide a vertical clearance of 98 inches (2490 mm) minimum.

502.6 Identification. Parking space identification signs shall include the International Symbol of Accessibility complying with 703.7.2.1. Signs identifying van parking spaces shall contain the designation ''van accessible.'' Signs shall be 60 inches (1525 mm) minimum above the finish floor or ground surface measured to the bottom of the sign.

502.7 Relationship to Accessible Routes. Parking spaces and access aisles shall be designed so that cars and vans, when parked, cannot obstruct the required clear width of adjacent accessible routes.

503 PASSENGER LOADING ZONES

503.1 General. Passenger loading zones shall comply with 503.

503.2 Vehicle Pull-Up Space. Passenger loading zones shall provide a vehicular pull-up space 96 inches (2440 mm) wide minimum and 20 feet (6100 mm) long minimum.

503.3 Access Aisle. Passenger loading zones shall provide access aisles complying with 503 adjacent to the vehicle pull-up space. Access aisles shall adjoin an accessible route and shall not overlap the vehicular way.

503.3.1 Width. Access aisles serving vehicle pull-up spaces shall be 60 inches (1525 mm) wide minimum.

503.3.2 Length. Access aisles shall extend the full length of the vehicle pull-up spaces they serve.

503.3.3 Marking. Access aisles shall be marked so as to discourage parking in them.

503.4 Floor and Ground Surfaces. Vehicle pull-up spaces and access aisles serving them shall comply with 302. Access aisles shall be at the same level as the vehicle pull-up space they serve. Changes in level are not permitted.

EXCEPTION: Slopes not steeper than 1:48 shall be permitted.

503.5 Vertical Clearance. Vehicle pull-up spaces, access aisles serving them, and a vehicular route from an entrance to the passenger loading zone, and from the passenger loading zone to a vehicular exit shall provide a vertical clearance of 114 inches (2895 mm) minimum.

504 STAIRWAYS

504.1 General. Stairs shall comply with 504.

504.2 Treads and Risers. All steps on a flight of stairs shall have uniform riser heights and uniform tread depths. Risers shall be 4 inches (100 mm) high minimum and 7 inches (180 mm) high maximum. Treads shall be 11 inches (280 mm) deep minimum.

504.3 Open Risers. Open risers are not permitted.

504.4 Tread Surface. Stair treads shall comply with 302. Changes in level are not permitted.

EXCEPTION: Treads shall be permitted to have a slope not steeper than 1:48.

504.5 Nosings. The radius of curvature at the leading edge of the tread shall be ½ inch (13 mm) maximum. Nosings that project beyond risers shall have the underside of the leading edge curved or beveled. Risers shall be permitted to slope under the tread at an angle of 30 degrees maximum from vertical. The permitted projection of the nosing shall extend 1½ inches (38 mm) maximum over the tread below.

504.6 Handrails. Stairs shall have handrails complying with 505.

504.7 Wet Conditions. Stair treads and landings subject to wet conditions shall be designed to prevent the accumulation of water.

505 HANDRAILS

505.1 General. Handrails provided along walking surfaces complying with 403, required at ramps complying with 405, and required at stairs complying with 504 shall comply with 505.

505.2 Where Required. Handrails shall be provided on both sides of stairs and ramps.

EXCEPTION: In assembly areas, handrails shall not be required on both sides of aisle ramps where a handrail is provided at either side or within the aisle width.

505.3 Continuity. Handrails shall be continuous within the full length of each stair flight or ramp run. Inside handrails on switchback or dogleg stairs and ramps shall be continuous between flights or runs.

EXCEPTION: In assembly areas, handrails on ramps shall not be required to be continuous in aisles serving seating.

505.4 Height. Top of gripping surfaces of handrails shall be 34 inches (865 mm) minimum and 38 inches (965 mm) maximum vertically above walking surfaces, stair nosings, and ramp surfaces. Handrails shall be at a consistent height above walking surfaces, stair nosings, and ramp surfaces.

505.5 Clearance. Clearance between handrail gripping surfaces and adjacent surfaces shall be 1½ inches (38 mm) minimum.

505.6 Gripping Surface. Handrail gripping surfaces shall be continuous along their length and shall not be obstructed along their tops or sides. The bottoms of handrail gripping surfaces shall not be obstructed for more than 20 percent of their length. Where provided, horizontal projections shall occur 1½ inches (38 mm) minimum below the bottom of the handrail gripping surface.

EXCEPTIONS: 1. Where handrails are provided along walking surfaces with slopes not steeper than 1:20, the bottoms of handrail gripping surfaces shall be permitted to be obstructed along their entire length where they are integral to crash rails or bumper guards.

2. The distance between horizontal projections and the bottom of the gripping surface shall be permitted to be reduced by 1/8 inch (3.2 mm) for each ½ inch (13 mm) of additional handrail perimeter dimension that exceeds 4 inches (100 mm).

505.7 Cross Section. Handrail gripping surfaces shall have a cross section complying with 505.7.1 or 505.7.2.

505.7.1 Circular Cross Section. Handrail gripping surfaces with a circular cross section shall have an outside diameter of 1¼ inches (32 mm) minimum and 2 inches (51 mm) maximum.

505.7.2 Non-Circular Cross Sections. Handrail gripping surfaces with a noncircular cross section shall have a perimeter dimension of 4 inches (100 mm) minimum and 6¼ inches (160 mm) maximum, and a cross-section dimension of 2¼ inches (57 mm) maximum.

505.8 Surfaces. Handrail gripping surfaces and any surfaces adjacent to them shall be free of sharp or abrasive elements and shall have rounded edges.

505.9 Fittings. Handrails shall not rotate within their fittings.

505.10 Handrail Extensions. Handrail gripping surfaces shall extend beyond and in the same direction of stair flights and ramp runs in accordance with 505.10.

EXCEPTIONS: 1. Extensions shall not be required for continuous handrails at the inside turn of switchback or dogleg stairs and ramps.

2. In assembly areas, extensions shall not be required for ramp handrails in aisles serving seating where the handrails are discontinuous to provide access to seating and to permit crossovers within aisles.

3. In alterations, full extensions of handrails shall not be required where such extensions would be hazardous due to plan configuration.

505.10.1 Top and Bottom Extension at Ramps. Ramp handrails shall extend horizontally above the landing for 12 inches (305 mm) minimum beyond the top and bottom of ramp runs. Extensions shall return to a wall, guard, or the landing surface, or shall be continuous to the handrail of an adjacent ramp run.

505.10.2 Top Extension at Stairs. At the top of a stair flight, handrails shall extend horizontally above the landing for 12 inches (305 mm) minimum beginning directly above the first riser nosing. Extensions shall return to a wall, guard, or the landing surface, or shall be continuous to the handrail of an adjacent stair flight.

505.10.3 Bottom Extension at Stairs. At the bottom of a stair flight, handrails shall extend at the slope of the stair flight for a horizontal distance at least equal to one tread depth beyond the last riser nosing. Extension shall return to a wall, guard, or the landing surface, or shall be continuous to the handrail of an adjacent stair flight.

CHAPTER 6: PLUMBING ELEMENTS AND FACILITIES

601 GENERAL

601.1 Scope. The provisions of Chapter 6 shall apply where required by Chapter 2 or where referenced by a requirement in this document.

602 DRINKING FOUNTAINS

602.1 General. Drinking fountains shall comply with 307 and 602.

602.2 Clear Floor Space. Units shall have a clear floor or ground space complying with 305 positioned for a forward approach and centered on the unit. Knee and toe clearance complying with 306 shall be provided.

EXCEPTION: A parallel approach complying with 305 shall be permitted at units for children's use where the spout is 30 inches (760 mm) maximum above the finish floor or ground and is 3½ inches (90 mm) maximum from the front edge of the unit, including bumpers.

602.3 Operable Parts. Operable parts shall comply with 309.

602.4 Spout Height. Spout outlets shall be 36 inches (915 mm) maximum above the finish floor or ground.

602.5 Spout Location. The spout shall be located 15 inches (380 mm) minimum from the vertical support and 5 inches (125 mm) maximum from the front edge of the unit, including bumpers.

602.6 Water Flow. The spout shall provide a flow of water 4 inches (100 mm) high minimum and shall be located 5 inches (125 mm) maximum from the front of the unit. The angle of the water stream shall be measured horizontally relative to the front face of the unit. Where spouts are located less than 3 inches (75 mm) of the front of the unit, the angle of the water stream shall be 30 degrees maximum. Where spouts are located between 3 inches (75 mm) and 5 inches (125 mm) maximum from the front of the unit, the angle of the water stream shall be 15 degrees maximum.

602.7 Drinking Fountains for Standing Persons. Spout outlets of drinking fountains for standing persons shall be 38 inches (965 mm) minimum and 43 inches (1090 mm) maximum above the finish floor or ground.

603 TOILET AND BATHING ROOMS

603.1 General. Toilet and bathing rooms shall comply with 603.

603.2 Clearances. Clearances shall comply with 603.2.

603.2.1 Turning Space. Turning space complying with 304 shall be provided within the room.

603.2.2 Overlap. Required clear floor spaces, clearance at fixtures, and turning space shall be permitted to overlap.

603.2.3 Door Swing. Doors shall not swing into the clear floor space or clearance required for any fixture. Doors shall be permitted to swing into the required turning space.

EXCEPTIONS: 1. Doors to a toilet room or bathing room for a single occupant accessed only through a private office and not for common use or public use shall be permitted to swing into the clear floor space or clearance provided the swing of the door can be reversed to comply with 603.2.3.

2. Where the toilet room or bathing room is for individual use and a clear floor space complying with 305.3 is provided within the room beyond the arc of the door swing, doors shall be permitted to swing into the clear floor space or clearance required for any fixture.

603.3 Mirrors. Mirrors located above lavatories or countertops shall be installed with the bottom edge of the reflecting surface 40 inches (1015 mm) maximum above the finish floor or ground. Mirrors not located above lavatories or countertops shall be installed with the bottom edge of the reflecting surface 35 inches (890 mm) maximum above the finish floor or ground.

603.4 Coat Hooks and Shelves. Coat hooks shall be located within one of the reach ranges specified in 308. Shelves shall be located 40 inches (1015 mm) minimum and 48 inches (1220 mm) maximum above the finish floor.

604 WATER CLOSETS AND TOILET COMPARTMENTS

604.1 General. Water closets and toilet compartments shall comply with 604.2 through 604.8.

EXCEPTION: Water closets and toilet compartments for children's use shall be permitted to comply with 604.9.

604.2 Location. The water closet shall be positioned with a wall or partition to the rear and to one side. The centerline of the water closet shall be 16 inches (405 mm) minimum to 18 inches (455 mm) maximum from the side wall or partition, except that the water closet shall be 17 inches (430 mm) minimum and 19 inches (485 mm) maximum from the side wall or partition in the ambulatory accessible toilet compartment specified in 604.8.2. Water closets shall be arranged for a left-hand or right-hand approach.

604.3 Clearance. Clearances around water closets and in toilet compartments shall comply with 604.3.

604.3.1 Size. Clearance around a water closet shall be 60 inches (1525 mm) minimum measured perpendicular from the side wall and 56 inches (1420 mm) minimum measured perpendicular from the rear wall.

604.3.2 Overlap. The required clearance around the water closet shall be permitted to overlap the water closet, associated grab bars, dispensers, sanitary napkin disposal units, coat hooks, shelves, accessible routes, clear floor space and clearances required at other fixtures, and the turning space. No other fixtures or obstructions shall be located within the required water closet clearance.

EXCEPTION: In residential dwelling units, a lavatory complying with 606 shall be permitted on the rear wall 18 inches (455 mm) minimum from the water closet centerline where the clearance at the water closet is 66 inches (1675 mm) minimum measured perpendicular from the rear wall.

604.4 Seats. The seat height of a water closet above the finish floor shall be 17 inches (430 mm) minimum and 19 inches (485 mm) maximum measured to the top of the seat. Seats shall not be sprung to return to a lifted position.

EXCEPTIONS: 1. A water closet in a toilet room for a single occupant accessed only through a private office and not for common use or public use shall not be required to comply with 604.4.

2. In residential dwelling units, the height of water closets shall be permitted to be 15 inches (380 mm) minimum and 19 inches (485 mm) maximum above the finish floor measured to the top of the seat.

604.5 Grab Bars. Grab bars for water closets shall comply with 609. Grab bars shall be provided on the side wall closest to the water closet and on the rear wall.

EXCEPTIONS: 1. Grab bars shall not be required to be installed in a toilet room for a single occupant accessed only through a private office and not for common use or public use provided that reinforcement has been installed in walls and located so as to permit the installation of grab bars complying with 604.5.

2. In residential dwelling units, other than emergency transportable housing units required to provide mobility features complying with 809.2, grab bars shall not be required to be installed in toilet or bathrooms provided that reinforcement has been installed in walls and located so as to permit the installation of grab bars complying with 604.5.

3. In detention or correction facilities, grab bars shall not be required to be installed in housing or holding cells that are specially designed without protrusions for purposes of suicide prevention.

604.5.1 Side Wall. The side wall grab bar shall be 42 inches (1065 mm) long minimum, located 12 inches (305 mm) maximum from the rear wall and extending 54 inches (1370 mm) minimum from the rear wall.

604.5.2 Rear Wall. The rear wall grab bar shall be 36 inches (915 mm) long minimum and extend from the centerline of the water closet 12 inches (305 mm) minimum on one side and 24 inches (610 mm) minimum on the other side.

EXCEPTIONS: 1. The rear grab bar shall be permitted to be 24 inches (610 mm) long minimum, centered on the water closet, where wall space does not permit a length of 36 inches (915 mm) minimum due to the location of a recessed fixture adjacent to the water closet.

2. Where an administrative authority requires flush controls for flush valves to be located in a position that conflicts with the location of the rear grab bar, then the rear grab bar shall be permitted to be split or shifted to the open side of the toilet area.

604.6 Flush Controls. Flush controls shall be hand operated or automatic. Hand operated flush controls shall comply with 309. Flush controls shall be located on the open side of the water closet except in ambulatory accessible compartments complying with 604.8.2.

604.7 Dispensers. Toilet paper dispensers shall comply with 309.4 and shall be 7 inches (180 mm) minimum and 9 inches (230 mm) maximum in front of the water closet measured to the centerline of the dispenser. The outlet of the dispenser shall be 15 inches (380 mm) minimum and 48 inches (1220 mm) maximum above the finish floor and shall not be located behind grab bars. Dispensers shall not be of a type that controls delivery or that does not allow continuous paper flow.

604.8 Toilet Compartments. Wheelchair accessible toilet compartments shall meet the requirements of 604.8.1 and 604.8.3. Compartments containing more than one plumbing fixture shall comply with 603. Ambulatory accessible compartments shall comply with 604.8.2 and 604.8.3.

604.8.1 Wheelchair Accessible Compartments. Wheelchair accessible compartments shall comply with 604.8.1.

604.8.1.1 Size. Wheelchair accessible compartments shall be 60 inches (1525 mm) wide minimum measured perpendicular to the side wall, and 56 inches (1420 mm) deep minimum for wall hung water closets and 59 inches (1500 mm) deep minimum for floor mounted water closets measured perpendicular to the rear wall. Wheelchair accessible compartments for children's use shall be 60 inches (1525 mm) wide minimum measured perpendicular to the side wall, and 59 inches (1500 mm) deep minimum for wall hung and floor mounted water closets measured perpendicular to the rear wall.

604.8.1.2 Doors. Toilet compartment doors, including door hardware, shall comply with 404 except that if the approach is to the latch side of the compartment door, clearance between the door side of the compartment and any obstruction shall be 42 inches (1065 mm) minimum. Doors shall be located in the front partition or in the side wall or partition farthest from the water closet. Where located in the front partition, the door opening shall be 4 inches (100 mm) maximum from the side wall or partition farthest from the water closet. Where located in the side wall or partition, the door opening shall be 4 inches (100 mm) maximum from the front partition. The door shall be self-closing. A door pull complying with 404.2.7 shall be placed on both sides of the door near the latch. Toilet compartment doors shall not swing into the minimum required compartment area.

604.8.1.3 Approach. Compartments shall be arranged for left-hand or right-hand approach to the water closet.

604.8.1.4 Toe Clearance. The front partition and at least one side partition shall provide a toe clearance of 9 inches (230 mm) minimum above the finish floor and 6 inches (150 mm) deep minimum beyond the compartment-side face of the partition, exclusive of partition support members. Compartments for children's use shall provide a toe clearance of 12 inches (305 mm) minimum above the finish floor.

EXCEPTION: Toe clearance at the front partition is not required in a compartment greater than 62 inches (1575 mm) deep with a wall-hung water closet or 65 inches (1650 mm) deep with a floor-mounted water closet. Toe clearance at the side partition is not required in a compartment greater than 66 inches (1675 mm) wide. Toe clearance at the front partition is not required in a compartment for children's use that is greater than 65 inches (1650 mm) deep.

604.8.1.5 Grab Bars. Grab bars shall comply with 609. A sidewall grab bar complying with 604.5.1 shall be provided and shall be located on the wall closest to the water closet. In addition, a rear-wall grab bar complying with 604.5.2 shall be provided.

604.8.2 Ambulatory Accessible Compartments. Ambulatory accessible compartments shall comply with 604.8.2.

604.8.2.1 Size. Ambulatory accessible compartments shall have a depth of 60 inches (1525 mm) minimum and a width of 35 inches (890 mm) minimum and 37 inches (940 mm) maximum.

604.8.2.2 Doors. Toilet compartment doors, including door hardware, shall comply with 404, except that if the approach is to the latch side of the compartment door, clearance between the door side of the compartment and any obstruction shall be 42 inches (1065 mm) minimum. The door shall be self-closing. A door pull complying with 404.2.7 shall be placed on both sides of the door near the latch. Toilet compartment doors shall not swing into the minimum required compartment area.

604.8.2.3 Grab Bars. Grab bars shall comply with 609. A sidewall grab bar complying with 604.5.1 shall be provided on both sides of the compartment.

604.8.3 Coat Hooks and Shelves. Coat hooks shall be located within one of the reach ranges specified in 308. Shelves shall be located 40 inches (1015 mm) minimum and 48 inches (1220 mm) maximum above the finish floor.

604.9 Water Closets and Toilet Compartments for Children's Use. Water closets and toilet compartments for children's use shall comply with 604.9.

604.9.1 Location. The water closet shall be located with a wall or partition to the rear and to one side. The centerline of the water closet shall be 12 inches (305 mm) minimum and 18 inches (455 mm) maximum from the side wall or partition, except that the water closet shall be 17 inches (430 mm) minimum and 19 inches (485 mm) maximum from the side wall or partition in the ambulatory accessible toilet compartment specified in 604.8.2. Compartments shall be arranged for left-hand or right-hand approach to the water closet.

604.9.2 Clearance. Clearance around a water closet shall comply with 604.3.

604.9.3 Height. The height of water closets shall be 11 inches (280 mm) minimum and 17 inches (430 mm) maximum measured to the top of the seat. Seats shall not be sprung to return to a lifted position.

604.9.4 Grab Bars. Grab bars for water closets shall comply with 604.5.

604.9.5 Flush Controls. Flush controls shall be hand operated or automatic. Hand operated flush controls shall comply with 309.2 and 309.4 and shall be installed 36 inches (915 mm) maximum above the finish floor. Flush controls shall be located on the open side of the water closet except in ambulatory accessible compartments complying with 604.8.2.

604.9.6 Dispensers. Toilet paper dispensers shall comply with 309.4 and shall be 7 inches (180 mm) minimum and 9 inches (230 mm) maximum in front of the water closet measured to the centerline of the dispenser. The outlet of the dispenser shall be 14 inches (355 mm) minimum and 19 inches (485 mm) maximum above the finish floor. There shall be a clearance of 1½ inches (38 mm) minimum below the grab bar. Dispensers shall not be of a type that controls delivery or that does not allow continuous paper flow.

604.9.7 Toilet Compartments. Toilet compartments shall comply with 604.8.

605 URINALS

605.1 General. Urinals shall comply with 605.

605.2 Height and Depth. Urinals shall be the stall-type or the wall-hung type with the rim 17 inches (430 mm) maximum above the finish floor or ground. Urinals shall be 13½ inches (345 mm) deep minimum measured from the outer face of the urinal rim to the back of the fixture.

605.3 Clear Floor Space. A clear floor or ground space complying with 305 positioned for forward approach shall be provided.

605.4 Flush Controls. Flush controls shall be hand operated or automatic. Hand operated flush controls shall comply with 309.

606 LAVATORIES AND SINKS

606.1 General. Lavatories and sinks shall comply with 606.

606.2 Clear Floor Space. A clear floor space complying with 305, positioned for a forward approach, and knee and toe clearance complying with 306 shall be provided.

EXCEPTIONS: 1. A parallel approach complying with 305 shall be permitted to a kitchen sink in a space where a cook top or conventional range is not provided and to wet bars.

2. A lavatory in a toilet room or bathing facility for a single occupant accessed only through a private office and not for common use or public use shall not be required to provide knee and toe clearance complying with 306.

3. In residential dwelling units, other than emergency transportable housing units required to provide mobility features complying with 809.2, cabinetry shall be permitted under lavatories and kitchen sinks provided that all of the following conditions are met:

(a) The cabinetry can be removed without removal or replacement of the fixture;

(b) The finish floor extends under the cabinetry; and

(c) The walls behind and surrounding the cabinetry are finished.

4. A knee clearance of 24 inches (610 mm) minimum above the finish floor or ground shall be permitted at lavatories and sinks used primarily by children 6 through 12 years where the rim or counter surface is 31 inches (785 mm) maximum above the finish floor or ground.

5. A parallel approach complying with 305 shall be permitted to lavatories and sinks used primarily by children 5 years and younger.

6. The dip of the overflow shall not be considered in determining knee and toe clearances.

7. No more than one bowl of a multi-bowl sink shall be required to provide knee and toe clearance complying with 306.

606.3 Height. Lavatories and sinks shall be installed with the front of the higher of the rim or counter surface 34 inches (865 mm) maximum above the finish floor or ground.

EXCEPTIONS: 1. A lavatory in a toilet or bathing facility for a single occupant accessed only through a private office and not for common use or public use shall not be required to comply with 606.3.

2. In residential dwelling unit kitchens, sinks that are adjustable to variable heights, 29 inches (735 mm) minimum and 36 inches (915 mm) maximum, shall be permitted where rough-in plumbing permits connections of supply and drain pipes for sinks mounted at the height of 29 inches (735 mm).

606.4 Faucets and water spray units. Controls for faucets shall comply with 309. Hand-operated metering faucets shall remain open for 10 seconds minimum. Faucets and Water Spray Units. A water spray unit shall be provided at the kitchen sink in emergency transportable housing units required to provide mobility features complying with 809.2.

606.5 Exposed Pipes and Surfaces. Water supply and drain pipes under lavatories and sinks shall be insulated or otherwise configured to protect against contact. There shall be no sharp or abrasive surfaces under lavatories and sinks.

607 BATHTUBS

607.1 General. Bathtubs shall comply with 607.

607.2 Clearance. Clearance in front of bathtubs shall extend the length of the bathtub and shall be 30 inches (760 mm) wide minimum. A lavatory complying with 606 shall be permitted at the control end of the clearance. Where a permanent seat is provided at the head end of the bathtub, the clearance shall extend 12 inches (305 mm) minimum beyond the wall at the head end of the bathtub.

607.3 Seat. A permanent seat at the head end of the bathtub or a removable in-tub seat shall be provided. Seats shall comply with 610.

607.4 Grab Bars. Grab bars for bathtubs shall comply with 609 and shall be provided in accordance with 607.4.1 or 607.4.2.

EXCEPTIONS: 1. Grab bars shall not be required to be installed in a bathtub located in a bathing facility for a single occupant accessed only through a private office and not for common use or public use provided that reinforcement has been installed in walls and located so as to permit the installation of grab bars complying with 607.4.

2. In residential dwelling units, other than emergency transportable housing units required to provide mobility features complying with 809.2, grab bars shall not be required to be installed in bathtubs located in bathing facilities provided that reinforcement has been installed in walls and located so as to permit the installation of grab bars complying with 607.4.

607.4.1 Bathtubs With Permanent Seats. For bathtubs with permanent seats, grab bars shall be provided in accordance with 607.4.1.

607.4.1.1 Back Wall. Two grab bars shall be installed on the back wall, one located in accordance with 609.4 and the other located 8 inches (205 mm) minimum and 10 inches (255 mm) maximum above the rim of the bathtub. Each grab bar shall be installed 15 inches (380 mm) maximum from the head end wall and 12 inches (305 mm) maximum from the control end wall.

607.4.1.2 Control End Wall. A grab bar 24 inches (610 mm) long minimum shall be installed on the control end wall at the front edge of the bathtub.

607.4.2 Bathtubs Without Permanent Seats. For bathtubs without permanent seats, grab bars shall comply with 607.4.2.

607.4.2.1 Back Wall. Two grab bars shall be installed on the back wall, one located in accordance with 609.4 and other located 8 inches (205 mm) minimum and 10 inches (255 mm) maximum above the rim of the bathtub. Each grab bar shall be 24 inches (610 mm)

long minimum and shall be installed 24 inches (610 mm) maximum from the head end wall and 12 inches (305 mm) maximum from the control end wall.

607.4.2.2 Control End Wall. A grab bar 24 inches (610 mm) long minimum shall be installed on the control end wall at the front edge of the bathtub.

607.4.2.3 Head End Wall. A grab bar 12 inches (305 mm) long minimum shall be installed on the head end wall at the front edge of the bathtub.

607.5 Controls. Controls, other than drain stoppers, shall be located on an end wall. Controls shall be between the bathtub rim and grab bar, and between the open side of the bathtub and the centerline of the width of the bathtub. Controls shall comply with 309.4.

607.6 Shower Spray Unit and Water. A shower spray unit with a hose 59 inches (1500 mm) long minimum that can be used both as a fixed-position shower head and as a handheld shower shall be provided. The shower spray unit shall have an on/off control with a non-positive shut-off. If an adjustable height shower head on a vertical bar is used, the bar shall be installed so as not to obstruct the use of grab bars. Bathtub shower spray units shall deliver water that is 120 °F (49 °C) maximum.

607.7 Bathtub Enclosures. Enclosures for bathtubs shall not obstruct controls, faucets, shower and spray units or obstruct transfer from wheelchairs onto bathtub seats or into bathtubs. Enclosures on bathtubs shall not have tracks installed on the rim of the open face of the bathtub.

608 Shower Compartments

608.1 General. Shower compartments shall comply with 608.

608.2 Size and Clearances for Shower Compartments. Shower compartments shall have sizes and clearances complying with 608.2.

608.2.1 Transfer Type Shower Compartments. Transfer type shower compartments shall be 36 inches (915 mm) by 36 inches (915 mm) clear inside dimensions measured at the center points of opposing sides and shall have a 36 inch (915 mm) wide minimum entry on the face of the shower compartment. Clearance of 36 inches (915 mm) wide minimum by 48 inches (1220 mm) long minimum measured from the control wall shall be provided.

608.2.2 Standard Roll-In Type Shower Compartments. Standard roll-in type shower compartments shall be 30 inches (760 mm) wide minimum by 60 inches (1525 mm) deep minimum clear inside dimensions measured at center points of opposing sides and shall have a 60 inches (1525 mm) wide minimum entry on the face of the shower compartment.

608.2.2.1 Clearance. A 30 inch (760 mm) wide minimum by 60 inch (1525 mm) long minimum clearance shall be provided adjacent to the open face of the shower compartment.

Exception: A lavatory complying with 606 shall be permitted on one 30 inch (760 mm) wide minimum side of the clearance provided that it is not on the side of the clearance adjacent to the controls or, where provided, not the side of the clearance adjacent to the shower seat.

608.2.3 Alternate Roll-In Type Shower Compartments. Alternate roll-in type shower compartments shall be 36 inches (915 mm) wide and 60 inches (1525 mm) deep minimum clear inside dimensions measured at center points of opposing sides. A 36 inch (915 mm) wide minimum entry shall be provided at one end of the long side of the compartment.

608.3 Grab Bars. Grab bars shall comply with 609 and shall be provided in accordance with 608.3. Where multiple grab bars are used, required horizontal grab bars shall be installed at the same height above the finish floor.

Exceptions: 1. Grab bars shall not be required to be installed in a shower located in a bathing facility for a single occupant accessed only through a private office, and not for common use or public use provided that reinforcement has been installed in walls and located so as to permit the installation of grab bars complying with 608.3.

2. In residential dwelling units, other than emergency transportable housing units required to provide mobility features complying with 809.2, grab bars shall not be required to be installed in showers located in bathing facilities provided that reinforcement has been installed in walls and located so as to permit the installation of grab bars complying with 608.3.

608.3.1 Transfer Type Shower Compartments. In transfer type compartments, grab bars shall be provided across the control wall and back wall to a point 18 inches (455 mm) from the control wall.

608.3.2 Standard Roll-In Type Shower Compartments. Where a seat is provided in standard roll-in type shower compartments, grab bars shall be provided on the back wall and the side wall opposite the seat. Grab bars shall not be provided above the seat. Where a seat is not provided in standard roll-in type shower compartments, grab bars shall be provided on three walls. Grab bars shall be installed 6 inches (150 mm) maximum from adjacent walls.

608.3.3 Alternate Roll-In Type Shower Compartments. In alternate roll-in type shower compartments, grab bars shall be provided on the back wall and the side wall farthest from the compartment entry. Grab bars shall not be provided above the seat. Grab bars shall be installed 6 inches (150 mm) maximum from adjacent walls.

608.4 Seats. A folding or non-folding seat shall be provided in transfer type shower

compartments. A folding seat shall be provided in roll-in type showers required in transient lodging guest rooms with mobility features complying with 806.2 and in roll-in type showers provided in emergency transportable housing units required to provide mobility features complying with 809.2. Seats shall comply with 610.

EXCEPTION: In residential dwelling units, other than emergency transportable housing units, seats shall not be required in transfer type shower compartments provided that reinforcement has been installed in walls so as to permit the installation of seats complying with 608.4.

608.5 Controls. Controls, faucets, and shower spray units shall comply with 309.4.

608.5.1 Transfer Type Shower Compartments. In transfer type shower compartments, the controls, faucets, and shower spray unit shall be installed on the side wall opposite the seat 38 inches (965 mm) minimum and 48 inches (1220 mm) maximum above the shower floor and shall be located on the control wall 15 inches (380 mm) maximum from the centerline of the seat toward the shower opening.

608.5.2 Standard Roll-In Type Shower Compartments. In standard roll-in type shower compartments, the controls, faucets, and shower spray unit shall be located above the grab bar, but no higher than 48 inches (1220 mm) above the shower floor. Where a seat is provided, the controls, faucets, and shower spray unit shall be installed on the back wall adjacent to the seat wall and shall be located 27 inches (685 mm) maximum from the seat wall.

608.5.3 Alternate Roll-In Type Shower Compartments. In alternate roll-in type shower compartments, the controls, faucets, and shower spray unit shall be located above the grab bar, but no higher than 48 inches (1220 mm) above the shower floor. Where a seat is provided, the controls, faucets, and shower spray unit shall be located on the side wall adjacent to the seat 27 inches (685 mm) maximum from the side wall behind the seat or shall be located on the back wall opposite the seat 15 inches (380 mm) maximum, left or right, of the centerline of the seat. Where a seat is not provided, the controls, faucets, and shower spray unit shall be installed on the side wall farthest from the compartment entry.

608.6 Shower Spray Unit and Water. A shower spray unit with a hose 59 inches (1500 mm) long minimum that can be used both as a fixed-position shower head and as a handheld shower shall be provided. The shower spray unit shall have an on/off control with a non-positive shut-off. If an adjustable-height shower head on a vertical bar is used, the bar shall be installed so as not to obstruct the use of grab bars. Shower spray units shall deliver water that is 120 °F (49 °C) maximum.

EXCEPTION: A fixed shower head located at 48 inches (1220 mm) maximum above the shower finish floor shall be permitted instead of a hand-held spray unit in facilities that are not medical care facilities, long-term care facilities, transient lodging guest rooms, or residential dwelling units.

608.7 Thresholds. Thresholds in roll-in type shower compartments shall be ½ inch (13 mm) high maximum in accordance with 303. In transfer type shower compartments, thresholds ½ inch (13 mm) high maximum shall be beveled, rounded, or vertical.

EXCEPTION: A threshold 2 inches (51 mm) high maximum shall be permitted in transfer type shower compartments in existing facilities where provision of a ½ inch (13 mm) high threshold would disturb the structural reinforcement of the floor slab.

608.8 Shower Enclosures. Enclosures for shower compartments shall not obstruct controls, faucets, and shower spray units or obstruct transfer from wheelchairs onto shower seats.

609 GRAB BARS

609.1 General. Grab bars in toilet facilities and bathing facilities shall comply with 609.

609.2 Cross Section. Grab bars shall have a cross section complying with 609.2.1 or 609.2.2.

609.2.1 Circular Cross Section. Grab bars with circular cross sections shall have an outside diameter of 1¼ inches (32 mm) minimum and 2 inches (51 mm) maximum.

609.2.2 Non-Circular Cross Section. Grab bars with non-circular cross sections shall have a cross-section dimension of 2 inches (51 mm) maximum and a perimeter dimension of 4 inches (100 mm) minimum and 4.8 inches (120 mm) maximum.

609.3 Spacing. The space between the wall and the grab bar shall be 1½ inches (38 mm). The space between the grab bar and projecting objects below and at the ends shall be 1½ inches (38 mm) minimum. The space between the grab bar and projecting objects above shall be 12 inches (305 mm) minimum.

EXCEPTION: The space between the grab bars and shower controls, shower fittings, and other grab bars above shall be permitted to be 1½ inches (38 mm) minimum.

609.4 Position of Grab Bars. Grab bars shall be installed in a horizontal position, 33 inches (840 mm) minimum and 36 inches (915 mm) maximum above the finish floor measured to the top of the gripping surface, except that at water closets for children's use complying with 604.9, grab bars shall be installed in a horizontal position 18 inches (455 mm) minimum and 27 inches (685 mm) maximum above the finish floor measured to the top of the gripping surface. The height of the lower grab bar on the back wall of a bathtub shall comply with 607.4.1.1 or 607.4.2.1.

609.5 Surface Hazards. Grab bars and any wall or other surfaces adjacent to grab bars

shall be free of sharp or abrasive elements and shall have rounded edges.

609.6 Fittings. Grab bars shall not rotate within their fittings.

609.7 Installation. Grab bars shall be installed in any manner that provides a gripping surface at the specified locations and that does not obstruct the required clear floor space.

609.8 Structural Strength. Allowable stresses shall not be exceeded for materials used when a vertical or horizontal force of 250 pounds (1112 N) is applied at any point on the grab bar, fastener, mounting device, or supporting structure.

610 Seats

610.1 General. Seats in bathtubs and shower compartments shall comply with 610.

610.2 Bathtub Seats. The top of bathtub seats shall be 17 inches (430 mm) minimum and 19 inches (485 mm) maximum above the bathroom finish floor. The depth of a removable in-tub seat shall be 15 inches (380 mm) minimum and 16 inches (405 mm) maximum. The seat shall be capable of secure placement. Permanent seats at the head end of the bathtub shall be 15 inches (380 mm) deep minimum and shall extend from the back wall to or beyond the outer edge of the bathtub.

610.3 Shower Compartment Seats. Where a seat is provided in a standard roll-in shower compartment, it shall be a folding type, shall be installed on the side wall adjacent to the controls, and shall extend from the back wall to a point within 3 inches (75 mm) of the compartment entry. Where a seat is provided in an alternate roll-in type shower compartment, it shall be a folding type, shall be installed on the front wall opposite the back wall, and shall extend from the adjacent side wall to a point within 3 inches (75 mm) of the compartment entry. In transfer-type showers, the seat shall extend from the back wall to a point within 3 inches (75 mm) of the compartment entry. The top of the seat shall be 17 inches (430 mm) minimum and 19 inches (485 mm) maximum above the bathroom finish floor. Seats shall comply with 610.3.1 or 610.3.2.

610.3.1 Rectangular Seats. The rear edge of a rectangular seat shall be 2½ inches (64 mm) maximum and the front edge 15 inches (380 mm) minimum and 16 inches (405 mm) maximum from the seat wall. The side edge of the seat shall be 1½ inches (38 mm) maximum from the adjacent wall.

610.3.2 L-Shaped Seats. The rear edge of an L-shaped seat shall be 2½ inches (64 mm) maximum and the front edge 15 inches (380 mm) minimum and 16 inches (405 mm) maximum from the seat wall. The rear edge of the ''L'' portion of the seat shall be 1½ inches (38 mm) maximum from the wall and the front edge shall be 14 inches (355 mm) minimum and 15 inches (380 mm) maximum from the wall. The end of the ''L'' shall be 22 inches (560 mm) minimum and 23 inches maximum (585 mm) from the main seat wall.

610.4 Structural Strength. Allowable stresses shall not be exceeded for materials used when a vertical or horizontal force of 250 pounds (1112 N) is applied at any point on the seat, fastener, mounting device, or supporting structure.

611 Washing Machines and Clothes Dryers

611.1 General. Washing machines and clothes dryers shall comply with 611.

611.2 Clear Floor Space. A clear floor or ground space complying with 305 positioned for parallel approach shall be provided. The clear floor or ground space shall be centered on the appliance.

611.3 Operable Parts. Operable parts, including doors, lint screens, and detergent and bleach compartments shall comply with 309.

611.4 Height. Top loading machines shall have the door to the laundry compartment located 36 inches (915 mm) maximum above the finish floor. Front loading machines shall have the bottom of the opening to the laundry compartment located 15 inches (380 mm) minimum and 36 inches (915 mm) maximum above the finish floor.

612 Saunas and Steam Rooms

612.1 General. Saunas and steam rooms shall comply with 612.

612.2 Bench. Where seating is provided in saunas and steam rooms, at least one bench shall comply with 903. Doors shall not swing into the clear floor space required by 903.2.

Exception: A readily removable bench shall be permitted to obstruct the turning space required by 612.3 and the clear floor or ground space required by 903.2.

612.3 Turning Space. A turning space complying with 304 shall be provided within saunas and steam rooms.

Chapter 7: Communication Elements and Features

701 General

701.1 Scope. The provisions of Chapter 7 shall apply where required by Chapter 2 or where referenced by a requirement in this document.

702 Fire Alarm Systems

702.1 General. Fire alarm systems shall have permanently installed audible and visible alarms complying with NFPA 72 (1999 or 2002 edition) (incorporated by reference, see ''Referenced Standards'' in Chapter 1), except that the maximum allowable sound level of audible notification appliances complying with section 4–3.2.1 of NFPA 72 (1999 edition) shall have a sound level no more

than 110 dB at the minimum hearing distance from the audible appliance. In addition, alarms in guest rooms required to provide communication features shall comply with sections 4–3 and 4–4 of NFPA 72 (1999 edition) or sections 7.4 and 7.5 of NFPA 72 (2002 edition).

EXCEPTION: Fire alarm systems in medical care facilities shall be permitted to be provided in accordance with industry practice.

703 SIGNS

703.1 General. Signs shall comply with 703. Where both visual and tactile characters are required, either one sign with both visual and tactile characters, or two separate signs, one with visual, and one with tactile characters, shall be provided.

703.2 Raised Characters. Raised characters shall comply with 703.2 and shall be duplicated in braille complying with 703.3. Raised characters shall be installed in accordance with 703.4.

703.2.1 Depth. Raised characters shall be 1/32 inch (0.8 mm) minimum above their background.

703.2.2 Case. Characters shall be uppercase.

703.2.3 Style. Characters shall be sans serif. Characters shall not be italic, oblique, script, highly decorative, or of other unusual forms.

703.2.4 Character Proportions. Characters shall be selected from fonts where the width of the uppercase letter ''O'' is 55 percent minimum and 110 percent maximum of the height of the uppercase letter ''I''.

703.2.5 Character Height. Character height measured vertically from the baseline of the character shall be 5/8 inch (16 mm) minimum and 2 inches (51 mm) maximum based on the height of the uppercase letter ''I''.

EXCEPTION: Where separate raised and visual characters with the same information are provided, raised character height shall be permitted to be 1/2 inch (13 mm) minimum.

703.2.6 Stroke Thickness. Stroke thickness of the uppercase letter ''I'' shall be 15 percent maximum of the height of the character.

703.2.7 Character Spacing. Character spacing shall be measured between the two closest points of adjacent raised characters within a message, excluding word spaces. Where characters have rectangular cross sections, spacing between individual raised characters shall be 1/8 inch (3.2 mm) minimum and 4 times the raised character stroke width maximum. Where characters have other cross sections, spacing between individual raised characters shall be 1/16 inch (1.6 mm) minimum and 4 times the raised character stroke width maximum at the base of the cross sections, and 1/8 inch (3.2 mm) minimum and 4 times the raised character stroke width maximum at the top of the cross sections. Characters shall be separated from raised borders and decorative elements 3/8 inch (9.5 mm) minimum.

703.2.8 Line Spacing. Spacing between the baselines of separate lines of raised characters within a message shall be 135 percent minimum and 170 percent maximum of the raised character height.

703.3 Braille. Braille shall be contracted (Grade 2) and shall comply with 703.3 and 703.4.

703.3.1 Dimensions and Capitalization. Braille dots shall have a domed or rounded shape and shall comply with Table 703.3.1. The indication of an uppercase letter or letters shall only be used before the first word of sentences, proper nouns and names, individual letters of the alphabet, initials, and acronyms.

TABLE 703.3.1—BRAILLE DIMENSIONS

Measurement range	Minimum in inches Maximum in inches
Dot base diameter	0.059 (1.5 mm) to 0.063 (1.6 mm).
Distance between two dots in the same cell [1].	0.090 (2.3 mm) to 0.100 (2.5 mm).
Distance between corresponding dots in adjacent cells [1].	0.241 (6.1 mm) to 0.300 (7.6 mm).
Dot height	0.025 (0.6 mm) to 0.037 (0.9 mm).
Distance between corresponding dots from one cell directly below [1].	0.395 (10 mm) to 0.400 (10.2 mm).

[1] Measured center to center.

703.3.2 Position. Braille shall be positioned below the corresponding text. If text is multi-lined, braille shall be placed below the entire text. Braille shall be separated 3/8 inch (9.5 mm) minimum from any other tactile characters and 3/8 inch (9.5 mm) minimum from raised borders and decorative elements.

EXCEPTION: Braille provided on elevator car controls shall be separated 3/16 inch (4.8 mm) minimum and shall be located either directly below or adjacent to the corresponding raised characters or symbols.

703.4 Installation Height and Location. Signs with tactile characters shall comply with 703.4.

703.4.1 Height Above Finish Floor or Ground. Tactile characters on signs shall be located 48 inches (1220 mm) minimum above the finish floor or ground surface, measured from the baseline of the lowest tactile character and 60 inches (1525 mm) maximum above the finish floor or ground surface, measured from the baseline of the highest tactile character.

EXCEPTION: Tactile characters for elevator car controls shall not be required to comply with 703.4.1.

703.4.2 Location. Where a tactile sign is provided at a door, the sign shall be located alongside the door at the latch side. Where a tactile sign is provided at double doors with

one active leaf, the sign shall be located on the inactive leaf. Where a tactile sign is provided at double doors with two active leafs, the sign shall be located to the right of the right hand door. Where there is no wall space at the latch side of a single door or at the right side of double doors, signs shall be located on the nearest adjacent wall. Signs containing tactile characters shall be located so that a clear floor space of 18 inches (455 mm) minimum by 18 inches (455 mm) minimum, centered on the tactile characters, is provided beyond the arc of any door swing between the closed position and 45 degree open position.

EXCEPTION: Signs with tactile characters shall be permitted on the push side of doors with closers and without hold-open devices.

703.5 Visual Characters. Visual characters shall comply with 703.5.

EXCEPTION: Where visual characters comply with 703.2 and are accompanied by braille complying with 703.3, they shall not be required to comply with 703.5.2 through 703.5.9.

703.5.1 Finish and Contrast. Characters and their background shall have a non-glare finish. Characters shall contrast with their background with either light characters on a dark background or dark characters on a light background.

703.5.2 Case. Characters shall be uppercase or lowercase or a combination of both.

703.5.3 Style. Characters shall be conventional in form. Characters shall not be italic, oblique, script, highly decorative, or of other unusual forms.

703.5.4 Character Proportions. Characters shall be selected from fonts where the width of the uppercase letter ''O'' is 55 percent minimum and 110 percent maximum of the height of the uppercase letter ''I''.

703.5.5 Character Height. Minimum character height shall comply with Table 703.5.5. Viewing distance shall be measured as the horizontal distance between the character and an obstruction preventing further approach towards the sign. Character height shall be based on the uppercase letter ''I''.

TABLE 703.5.5—VISUAL CHARACTER HEIGHT

Height to finish floor or ground from baseline of character	Horizontal viewing distance	Minimum character height
40 inches (1015 mm) to less than or equal to 70 inches (1780 mm).	less than 72 inches (1830 mm).	⅝ inch (16 mm).
	72 inches (1830 mm) and greater.	⅝ inch (16 mm), plus ⅛ inch (3.2 mm) per foot (305 mm) of viewing distance above 72 inches (1830 mm).
Greater than 70 inches (1780 mm) to less than or equal to 120 inches (3050 mm).	less than 180 inches (4570 mm).	2 inches (51 mm).
	180 inches (4570 mm) and greater.	2 inches (51 mm), plus ⅛ inch (3.2 mm) per foot (305 mm) of viewing distance above 180 inches (4570 mm).
Greater than 120 inches (3050 mm).	less than 21 feet (6400 mm) ...	3 inches (75 mm).
	21 feet (6400 mm) and greater	3 inches (75 mm), plus ⅛ inch (3.2 mm) per foot (305 mm) of viewing distance above 21 feet (6400 mm).

703.5.6 Height From Finish Floor or Ground. Visual characters shall be 40 inches (1015 mm) minimum above the finish floor or ground.

EXCEPTION: Visual characters indicating elevator car controls shall not be required to comply with 703.5.6.

703.5.7 Stroke Thickness. Stroke thickness of the uppercase letter ''I'' shall be 10 percent minimum and 30 percent maximum of the height of the character.

703.5.8 Character Spacing. Character spacing shall be measured between the two closest points of adjacent characters, excluding word spaces. Spacing between individual characters shall be 10 percent minimum and 35 percent maximum of character height.

703.5.9 Line Spacing. Spacing between the baselines of separate lines of characters within a message shall be 135 percent minimum and 170 percent maximum of the character height.

703.6 Pictograms. Pictograms shall comply with 703.6.

703.6.1 Pictogram Field. Pictograms shall have a field height of 6 inches (150 mm) minimum. Characters and braille shall not be located in the pictogram field.

703.6.2 Finish and Contrast. Pictograms and their field shall have a non-glare finish. Pictograms shall contrast with their field with either a light pictogram on a dark field or a dark pictogram on a light field.

703.6.3 Text Descriptors. Pictograms shall have text descriptors located directly below the pictogram field. Text descriptors shall comply with 703.2, 703.3 and 703.4.

703.7 Symbols of Accessibility. Symbols of accessibility shall comply with 703.7.

703.7.1 Finish and Contrast. Symbols of accessibility and their background shall have a non-glare finish. Symbols of accessibility shall contrast with their background

with either a light symbol on a dark background or a dark symbol on a light background.

703.7.2 Symbols.

703.7.2.1 International Symbol of Accessibility. The International Symbol of Accessibility shall comply with Figure 703.7.2.1 at the end of this document.

703.7.2.2 International Symbol of TTY. The International Symbol of TTY shall comply with Figure 703.7.2.2 at the end of this document.

703.7.2.3 Volume Control Telephones. Telephones with a volume control shall be identified by a pictogram of a telephone handset with radiating sound waves.

703.7.2.4. Assistive Listening Systems. Assistive listening systems shall be identified by the International Symbol of Access for Hearing Loss complying with Figure 703.7.2.4 at the end of this document.

704 TELEPHONES

704.1 General. Public telephones shall comply with 704.

704.2 Wheelchair Accessible Telephones. Wheelchair accessible telephones shall comply with 704.2.

704.2.1 Clear Floor or Ground Space. A clear floor or ground space complying with 305 shall be provided. The clear floor or ground space shall not be obstructed by bases, enclosures, or seats.

704.2.1.1 Parallel Approach. Where a parallel approach is provided, the distance from the edge of the telephone enclosure to the face of the telephone unit shall be 10 inches (255 mm) maximum.

704.2.1.2 Forward Approach. Where a forward approach is provided, the distance from the front edge of a counter within the telephone enclosure to the face of the telephone unit shall be 20 inches (510 mm) maximum.

704.2.2 Operable Parts. Operable parts shall comply with 309. Telephones shall have pushbutton controls where such service is available.

704.2.3 Telephone Directories. Telephone directories, where provided, shall be located in accordance with 309.

704.2.4 Cord Length. The cord from the telephone to the handset shall be 29 inches (735 mm) long minimum.

704.3 Volume Control Telephones. Public telephones required to have volume controls shall be equipped with a receive volume control that provides a gain adjustable up to 20 dB minimum. For incremental volume control, provide at least one intermediate step of 12 dB of gain minimum. An automatic reset shall be provided.

704.4 TTYs. TTYs required at a public pay telephone shall be permanently affixed within, or adjacent to, the telephone enclosure. Where an acoustic coupler is used, the telephone cord shall be sufficiently long to allow connection of the TTY and the telephone receiver.

704.4.1 Height. When in use, the touch surface of TTY keypads shall be 34 inches (865 mm) minimum above the finish floor.

EXCEPTION: Where seats are provided, TTYs shall not be required to comply with 704.4.1.

704.5 TTY Shelf. Public pay telephones required to accommodate portable TTYs shall be equipped with a shelf and an electrical outlet within or adjacent to the telephone enclosure. The telephone handset shall be capable of being placed flush on the surface of the shelf. The shelf shall be capable of accommodating a TTY and shall have 6 inches (150 mm) minimum vertical clearance above the area where the TTY is to be placed.

705 DETECTABLE WARNINGS

705.1 General. Detectable warnings shall consist of a surface of truncated domes and shall comply with 705.

705.1.1 Dome Size. Truncated domes in a detectable warning surface shall have a base diameter of 0.9 inch (23 mm) minimum and 1.4 inches (36 mm) maximum, a top diameter of 50 percent of the base diameter minimum to 65 percent of the base diameter maximum, and a height of 0.2 inch (5.1 mm).

705.1.2 Dome Spacing. Truncated domes in a detectable warning surface shall have a center-to-center spacing of 1.6 inches (41 mm) minimum and 2.4 inches (61 mm) maximum, and a base-to-base spacing of 0.65 inch (17 mm) minimum, measured between the most adjacent domes on a square grid.

705.1.3 Contrast. Detectable warning surfaces shall contrast visually with adjacent walking surfaces either light-on-dark, or dark-on-light.

705.2 Platform Edges. Detectable warning surfaces at platform boarding edges shall be 24 inches (610 mm) wide and shall extend the full length of the public use areas of the platform.

706 ASSISTIVE LISTENING SYSTEMS

706.1 General. Assistive listening systems required in assembly areas shall comply with 706.

706.2 Receiver Jacks. Receivers required for use with an assistive listening system shall include a ⅛ inch (3.2 mm) standard mono jack.

706.3 Receiver Hearing-Aid Compatibility. Receivers required to be hearing-aid compatible shall interface with telecoils in hearing aids through the provision of neckloops.

706.4 Sound Pressure Level. Assistive listening systems shall be capable of providing a sound pressure level of 110 dB minimum and 118 dB maximum with a dynamic range on the volume control of 50 dB.

706.5 Signal-to-Noise Ratio. The signal-to-noise ratio for internally generated noise in

assistive listening systems shall be 18 dB minimum.

706.6 Peak Clipping Level. Peak clipping shall not exceed 18 dB of clipping relative to the peaks of speech.

707 Automatic Teller Machines and Fare Machines

707.1 General. Automatic teller machines and fare machines shall comply with 707.

707.2 Clear Floor or Ground Space. A clear floor or ground space complying with 305 shall be provided.

Exception: Clear floor or ground space shall not be required at drive-up only automatic teller machines and fare machines.

707.3 Operable Parts. Operable parts shall comply with 309. Unless a clear or correct key is provided, each operable part shall be able to be differentiated by sound or touch, without activation.

Exception: Drive-up only automatic teller machines and fare machines shall not be required to comply with 309.2 and 309.3.

707.4 Privacy. Automatic teller machines shall provide the opportunity for the same degree of privacy of input and output available to all individuals.

707.5 Speech Output. Machines shall be speech enabled. Operating instructions and orientation, visible transaction prompts, user input verification, error messages, and all displayed information for full use shall be accessible to and independently usable by individuals with vision impairments. Speech shall be delivered through a mechanism that is readily available to all users, including but not limited to, an industry standard connector or a telephone handset. Speech shall be recorded or digitized human, or synthesized.

Exceptions: 1. Audible tones shall be permitted instead of speech for visible output that is not displayed for security purposes, including but not limited to, asterisks representing personal identification numbers.

2. Advertisements and other similar information shall not be required to be audible unless they convey information that can be used in the transaction being conducted.

3. Where speech synthesis cannot be supported, dynamic alphabetic output shall not be required to be audible.

707.5.1 User Control. Speech shall be capable of being repeated or interrupted. Volume control shall be provided for the speech function.

Exception: Speech output for any single function shall be permitted to be automatically interrupted when a transaction is selected.

707.5.2 Receipts. Where receipts are provided, speech output devices shall provide audible balance inquiry information, error messages, and all other information on the printed receipt necessary to complete or verify the transaction.

Exceptions: 1. Machine location, date and time of transaction, customer account number, and the machine identifier shall not be required to be audible.

2. Information on printed receipts that duplicates information available on-screen shall not be required to be presented in the form of an audible receipt.

3. Printed copies of bank statements and checks shall not be required to be audible.

707.6 Input. Input devices shall comply with 707.6.

707.6.1 Input Controls. At least one tactilely discernible input control shall be provided for each function. Where provided, key surfaces not on active areas of display screens, shall be raised above surrounding surfaces. Where membrane keys are the only method of input, each shall be tactilely discernible from surrounding surfaces and adjacent keys.

707.6.2 Numeric Keys. Numeric keys shall be arranged in a 12-key ascending or descending telephone keypad layout. The number five key shall be tactilely distinct from the other keys.

707.6.3 Function Keys. Function keys shall comply with 707.6.3.

707.6.3.1 Contrast. Function keys shall contrast visually from background surfaces. Characters and symbols on key surfaces shall contrast visually from key surfaces. Visual contrast shall be either light-on-dark or dark-on-light.

Exception: Tactile symbols required by 707.6.3.2 shall not be required to comply with 707.6.3.1.

707.6.3.2 Tactile Symbols. Function key surfaces shall have tactile symbols as follows: Enter or Proceed key: raised circle; Clear or Correct key: raised left arrow; Cancel key: raised letter ex; Add Value key: raised plus sign; Decrease Value key: raised minus sign.

707.7 Display Screen. The display screen shall comply with 707.7.

Exception: Drive-up only automatic teller machines and fare machines shall not be required to comply with 707.7.1.

707.7.1 Visibility. The display screen shall be visible from a point located 40 inches (1015 mm) above the center of the clear floor space in front of the machine.

707.7.2 Characters. Characters displayed on the screen shall be in a sans serif font. Characters shall be 3/16 inch (4.8 mm) high minimum based on the uppercase letter ''I''. Characters shall contrast with their background with either light characters on a dark background or dark characters on a light background.

707.8 Braille Instructions. Braille instructions for initiating the speech mode shall be provided. Braille shall comply with 703.3.

708 Two-Way Communication Systems

708.1 General. Two-way communication systems shall comply with 708.

708.2 Audible and Visual Indicators. The system shall provide both audible and visual signals.

708.3 Handsets. Handset cords, if provided, shall be 29 inches (735 mm) long minimum.

708.4 Residential Dwelling Unit Communication Systems. Communications systems between a residential dwelling unit and a site, building, or floor entrance shall comply with 708.4.

708.4.1 Common Use or Public Use System Interface. The common use or public use system interface shall include the capability of supporting voice and TTY communication with the residential dwelling unit interface.

708.4.2 Residential Dwelling Unit Interface. The residential dwelling unit system interface shall include a telephone jack capable of supporting voice and TTY communication with the common use or public use system interface.

Chapter 8: Special Rooms, Spaces, and Elements

801 General

801.1 Scope. The provisions of Chapter 8 shall apply where required by Chapter 2 or where referenced by a requirement in this document.

802 Wheelchair Spaces, Companion Seats, and Designated Aisle Seats

802.1 Wheelchair Spaces. Wheelchair spaces shall comply with 802.1.

802.1.1 Floor or Ground Surface. The floor or ground surface of wheelchair spaces shall comply with 302. Changes in level are not permitted.

Exception: Slopes not steeper than 1:48 shall be permitted.

802.1.2 Width. A single wheelchair space shall be 36 inches (915 mm) wide minimum. Where two adjacent wheelchair spaces are provided, each wheelchair space shall be 33 inches (840 mm) wide minimum.

802.1.3 Depth. Where a wheelchair space can be entered from the front or rear, the wheelchair space shall be 48 inches (1220 mm) deep minimum. Where a wheelchair space can be entered only from the side, the wheelchair space shall be 60 inches (1525 mm) deep minimum.

802.1.4 Approach. Wheelchair spaces shall adjoin accessible routes. Accessible routes shall not overlap wheelchair spaces.

802.1.5 Overlap. Wheelchair spaces shall not overlap circulation paths.

802.2 Lines of Sight. Lines of sight to the screen, performance area, or playing field for spectators in wheelchair spaces shall comply with 802.2.

802.2.1 Lines of Sight Over Seated Spectators. Where spectators are expected to remain seated during events, spectators in wheelchair spaces shall be afforded lines of sight complying with 802.2.1.

802.2.1.1 Lines of Sight Over Heads. Where spectators are provided lines of sight over the heads of spectators seated in the first row in front of their seats, spectators seated in wheelchair spaces shall be afforded lines of sight over the heads of seated spectators in the first row in front of wheelchair spaces.

802.2.1.2 Lines of Sight Between Heads. Where spectators are provided lines of sight over the shoulders and between the heads of spectators seated in the first row in front of their seats, spectators seated in wheelchair spaces shall be afforded lines of sight over the shoulders and between the heads of seated spectators in the first row in front of wheelchair spaces.

802.2.2 Lines of Sight Over Standing Spectators. Where spectators are expected to stand during events, spectators in wheelchair spaces shall be afforded lines of sight complying with 802.2.2.

802.2.2.1 Lines of Sight Over Heads. Where standing spectators are provided lines of sight over the heads of spectators standing in the first row in front of their seats, spectators seated in wheelchair spaces shall be afforded lines of sight over the heads of standing spectators in the first row in front of wheelchair spaces.

802.2.2.2 Lines of Sight Between Heads. Where standing spectators are provided lines of sight over the shoulders and between the heads of spectators standing in the first row in front of their seats, spectators seated in wheelchair spaces shall be afforded lines of sight over the shoulders and between the heads of standing spectators in the first row in front of wheelchair spaces.

802.3 Companion Seats. Companion seats shall comply with 802.3.

802.3.1 Alignment. In row seating, companion seats shall be located to provide shoulder alignment with adjacent wheelchair spaces. The shoulder alignment point of the wheelchair space shall be measured 36 inches (915 mm) from the front of the wheelchair space. The floor surface of the companion seat shall be at the same elevation as the floor surface of the wheelchair space.

802.3.2 Type. Companion seats shall be equivalent in size, quality, comfort, and amenities to the seating in the immediate area. Companion seats shall be permitted to be movable.

802.4 Designated Aisle Seats. Designated aisle seats shall comply with 802.4.

802.4.1 Armrests. Where armrests are provided on the seating in the immediate area, folding or retractable armrests shall be provided on the aisle side of the seat.

802.4.2 Identification. Each designated aisle seat shall be identified by a sign or marker.

803 DRESSING, FITTING, AND LOCKER ROOMS

803.1 General. Dressing, fitting, and locker rooms shall comply with 803.

803.2 Turning Space. Turning space complying with 304 shall be provided within the room.

803.3 Door Swing. Doors shall not swing into the room unless a clear floor or ground space complying with 305.3 is provided beyond the arc of the door swing.

803.4 Benches. A bench complying with 903 shall be provided within the room.

803.5 Coat Hooks and Shelves. Coat hooks provided within the room shall be located within one of the reach ranges specified in 308. Shelves shall be 40 inches (1015 mm) minimum and 48 inches (1220 mm) maximum above the finish floor or ground.

804 KITCHENS AND KITCHENETTES

804.1 General. Kitchens and kitchenettes shall comply with 804.

804.2 Clearance. Where a pass through kitchen is provided, clearances shall comply with 804.2.1. Where a U-shaped kitchen is provided, clearances shall comply with 804.2.2.

EXCEPTION: Spaces that do not provide a cooktop or conventional range shall not be required to comply with 804.2.

804.2.1 Pass Through Kitchen. In pass through kitchens where counters, appliances or cabinets are on two opposing sides, or where counters, appliances or cabinets are opposite a parallel wall, clearance between all opposing base cabinets, counter tops, appliances, or walls within kitchen work areas shall be 40 inches (1015 mm) minimum. Pass through kitchens shall have two entries.

804.2.2 U-Shaped. In U-shaped kitchens enclosed on three contiguous sides, clearance between all opposing base cabinets, counter tops, appliances, or walls within kitchen work areas shall be 60 inches (1525 mm) minimum.

804.3 Kitchen Work Surface. In residential dwelling units required to provide mobility features complying with 809.2, at least one 30 inch (760 mm) wide minimum section of counter shall provide a kitchen work surface that complies with 804.3.

EXCEPTION: In emergency transportable housing units, a work surface complying with 804.3 shall not be required provided that the following criteria are met:

(a) A kitchen table complying with 902 is provided within the kitchen;

(b) An electrical outlet is provided at a location within reach of the table; and

(c) All kitchen countertops are 34 inches high maximum.

804.3.1 Clear Floor or Ground Space. A clear floor space complying with 305 positioned for a forward approach shall be provided. The clear floor or ground space shall be centered on the kitchen work surface and shall provide knee and toe clearance complying with 306.

EXCEPTION: Cabinetry shall be permitted under the kitchen work surface provided that all of the following conditions are met:

(a) The cabinetry can be removed without removal or replacement of the kitchen work surface;

(b) the finish floor extends under the cabinetry; and

(c) the walls behind and surrounding the cabinetry are finished.

804.3.2 Height. The kitchen work surface shall be 34 inches (865 mm) maximum above the finish floor or ground.

EXCEPTION: A counter that is adjustable to provide a kitchen work surface at variable heights, 29 inches (735 mm) minimum and 36 inches (915 mm) maximum, shall be permitted.

804.3.3 Exposed Surfaces. There shall be no sharp or abrasive surfaces under the work surface counters.

804.4 Sinks. Sinks shall comply with 606.

804.5 Storage. At least 50 percent of shelf space in storage facilities shall comply with 811.

804.6 Appliances. Where provided, kitchen appliances shall comply with 804.6.

804.6.1 Clear Floor or Ground Space. A clear floor or ground space complying with 305 shall be provided at each kitchen appliance. Clear floor or ground spaces shall be permitted to overlap.

804.6.2 Operable Parts. All appliance controls shall comply with 309.

EXCEPTIONS: 1. Appliance doors and door latching devices shall not be required to comply with 309.4.

2. Bottom-hinged appliance doors, when in the open position, shall not be required to comply with 309.3.

804.6.3 Dishwasher. Clear floor or ground space shall be positioned adjacent to the dishwasher door. The dishwasher door, in the open position, shall not obstruct the clear floor or ground space for the dishwasher or the sink.

804.6.4 Range or Cooktop. Where a forward approach is provided, the clear floor or ground space shall provide knee and toe clearance complying with 306. Where knee and toe space is provided, the underside of the range or cooktop shall be insulated or otherwise configured to prevent burns, abrasions, or electrical shock. The location of controls shall not require reaching across burners.

804.6.5 Oven. Ovens shall comply with 804.6.5.

804.6.5.1 Side-Hinged Door Ovens. Side-hinged door ovens shall have the work surface required by 804.3 positioned adjacent to the latch side of the oven door.

804.6.5.2 Bottom-Hinged Door Ovens. Bottom-hinged door ovens shall have the work surface required by 804.3 positioned adjacent to one side of the door.

804.6.5.3 Controls. Ovens shall have controls on front panels.

804.6.6 Refrigerator/Freezer. Combination refrigerators and freezers shall have at least 50 percent of the freezer space 54 inches (1370 mm) maximum above the finish floor or ground. The clear floor or ground space shall be positioned for a parallel approach to the space dedicated to a refrigerator/freezer with the centerline of the clear floor or ground space offset 24 inches (610 mm) maximum from the centerline of the dedicated space.

805 Medical Care and Long-Term Care Facilities

805.1 General. Medical care facility and long-term care facility patient or resident sleeping rooms required to provide mobility features shall comply with 805.

805.2 Turning Space. Turning space complying with 304 shall be provided within the room.

805.3 Clear Floor or Ground Space. A clear floor space complying with 305 shall be provided on each side of the bed. The clear floor space shall be positioned for parallel approach to the side of the bed.

805.4 Toilet and Bathing Rooms. Toilet and bathing rooms that are provided as part of a patient or resident sleeping room shall comply with 603. Where provided, no fewer than one water closet, one lavatory, and one bathtub or shower shall comply with the applicable requirements of 603 through 610.

806 Transient Lodging Guest Rooms

806.1 General. Transient lodging guest rooms shall comply with 806. Guest rooms required to provide mobility features shall comply with 806.2. Guest rooms required to provide communication features shall comply with 806.3.

806.2 Guest Rooms with Mobility Features. Guest rooms required to provide mobility features shall comply with 806.2.

806.2.1 Living and Dining Areas. Living and dining areas shall be accessible.

806.2.2 Exterior Spaces. Exterior spaces, including patios, terraces and balconies, that serve the guest room shall be accessible.

806.2.3 Sleeping Areas. At least one sleeping area shall provide a clear floor space complying with 305 on both sides of a bed. The clear floor space shall be positioned for parallel approach to the side of the bed.

Exception: Where a single clear floor space complying with 305 positioned for parallel approach is provided between two beds, a clear floor or ground space shall not be required on both sides of a bed.

806.2.4 Toilet and Bathing Facilities. At least one bathroom that is provided as part of a guest room shall comply with 603. No fewer than one water closet, one lavatory, and one bathtub or shower shall comply with applicable requirements of 603 through 610. In addition, required roll-in shower compartments shall comply with 608.2.2 or 608.2.3. Toilet and bathing fixtures required to comply with 603 through 610 shall be permitted to be located in more than one toilet or bathing area, provided that travel between fixtures does not require travel between other parts of the guest room.

806.2.4.1 Vanity Counter Top Space. If vanity counter top space is provided in non-accessible guest toilet or bathing rooms, comparable vanity counter top space, in terms of size and proximity to the lavatory, shall also be provided in accessible guest toilet or bathing rooms.

806.2.5 Kitchens and Kitchenettes. Kitchens and kitchenettes shall comply with 804.

806.2.6 Turning Space. Turning space complying with 304 shall be provided within the guest room.

806.3 Guest Rooms with Communication Features. Guest rooms required to provide communication features shall comply with 806.3.

806.3.1 Alarms. Where emergency warning systems are provided, alarms complying with 702 shall be provided.

806.3.2 Notification Devices. Visible notification devices shall be provided to alert room occupants of incoming telephone calls and a door knock or bell. Notification devices shall not be connected to visible alarm signal appliances. Telephones shall have volume controls compatible with the telephone system and shall comply with 704.3. Telephones shall be served by an electrical outlet complying with 309 located within 48 inches (1220 mm) of the telephone to facilitate the use of a TTY.

807 Holding Cells and Housing Cells

807.1 General. Holding cells and housing cells shall comply with 807.

807.2 Cells with Mobility Features. Cells required to provide mobility features shall comply with 807.2.

807.2.1 Turning Space. Turning space complying with 304 shall be provided within the cell.

807.2.2 Benches. Where benches are provided, at least one bench shall comply with 903.

807.2.3 Beds. Where beds are provided, clear floor space complying with 305 shall be provided on at least one side of the bed. The clear floor space shall be positioned for parallel approach to the side of the bed.

807.2.4 Toilet and Bathing Facilities. Toilet facilities or bathing facilities that are

provided as part of a cell shall comply with 603. Where provided, no fewer than one water closet, one lavatory, and one bathtub or shower shall comply with the applicable requirements of 603 through 610.

807.3 Cells with Communication Features. Cells required to provide communication features shall comply with 807.3.

807.3.1 Alarms. Where audible emergency alarm systems are provided to serve the occupants of cells, visible alarms complying with 702 shall be provided.

EXCEPTION: Visible alarms shall not be required where inmates or detainees are not allowed independent means of egress.

807.3.2 Telephones. Telephones, where provided within cells, shall have volume controls complying with 704.3.

808 COURTROOMS

808.1 General. Courtrooms shall comply with 808.

808.2 Turning Space. Where provided, areas that are raised or depressed and accessed by ramps or platform lifts with entry ramps shall provide unobstructed turning space complying with 304.

808.3 Clear Floor Space. Each jury box and witness stand shall have, within its defined area, clear floor space complying with 305.

EXCEPTION: In alterations, wheelchair spaces are not required to be located within the defined area of raised jury boxes or witness stands and shall be permitted to be located outside these spaces where ramp or platform lift access poses a hazard by restricting or projecting into a means of egress required by the appropriate administrative authority.

808.4 Judges' Benches and Courtroom Stations. Judges' benches, clerks' stations, bailiffs' stations, deputy clerks' stations, court reporters' stations and litigants' and counsel stations shall comply with 902.

809 RESIDENTIAL DWELLING UNITS

809.1 General. Residential dwelling units shall comply with 809. Residential dwelling units required to provide mobility features shall comply with 809.2. Residential dwelling units required to provide communication features shall comply with 809.3.

809.2 Residential Dwelling Units with Mobility Features. Residential dwelling units required to provide mobility features shall comply with 809.2.

809.2.1 Accessible Routes. Accessible routes complying with Chapter 4 shall be provided within residential dwelling units in accordance with 809.2.1.

EXCEPTION: Accessible routes shall not be required to or within unfinished attics or unfinished basements.

809.2.1.1 Location. At least one accessible route shall connect all spaces and elements that are a part of the residential dwelling unit. Where only one accessible route is provided, it shall not pass through bathrooms, closets, or similar spaces.

809.2.1.2 Floor Surfaces. Within emergency transportable housing units, carpet shall not be provided on floor surfaces.

809.2.2 Turning Space. All rooms served by an accessible route shall provide a turning space complying with 304.

EXCEPTION: Turning space shall not be required in exterior spaces 30 inches (760 mm) maximum in depth or width.

809.2.3 Kitchen. Where a kitchen is provided, it shall comply with 804.

809.2.4 Toilet Facilities and Bathing Facilities. At least one bathroom shall comply with 603. No fewer than one of each type of fixture provided shall comply with applicable requirements of 603 through 610. Toilet and bathing fixtures required to comply with 603 through 610 shall be located in the same toilet and bathing area, such that travel between fixtures does not require travel between other parts of residential dwelling unit.

809.2.5 Bedrooms in Emergency Transportable Housing Units. Bedrooms in emergency transportable housing units shall comply with 809.2.5.

809.2.5.1 Clear Floor Space. A clear floor space complying with 305 shall be provided on one side of a bed. The clear floor space shall be positioned for parallel approach to the side of the bed and shall be on an accessible route.

809.2.5.2 Furniture. Where bedrooms are less than 70 square feet, furniture supplied with the unit shall not overlap the accessible route, maneuvering clearances required at doors, and turning space.

809.2.5.3 Lighting Controls. A means to control at least one source of bedroom lighting from the bed shall be provided.

809.2.6 Weather Alert Systems. Where provided in emergency transportable housing units, weather alert systems shall comply with 309.1 through 309.3.

809.3 Residential Dwelling Units with Communication Features. Residential dwelling units required to provide communication features shall comply with 809.3.

809.3.1 Alarms. Alarms shall comply and 809.3.1. The same visible notification appliances shall be permitted to provide notification of building fire alarm and residential dwelling unit smoke alarm activation. Visible notification appliances used to indicate building fire alarm or residential dwelling unit smoke alarm activation shall not be used for any other purpose within the residential dwelling unit.

809.3.1.1 Building Fire Alarm System. Where a building fire alarm system is provided, the system wiring shall be extended to a point within the residential dwelling unit in the vicinity of the residential dwelling

unit smoke alarm system. Notification appliances provided within a residential dwelling unit as part of the building fire alarm system shall comply with NFPA 72 (1999 or 2002 edition) (incorporated by reference, see ''Referenced Standards'' in Chapter 1).

809.3.1.2 Residential Dwelling Unit Smoke Alarms. Residential dwelling unit smoke alarms shall provide combination smoke alarms and visible notification appliances complying with NFPA 72 (1999 or 2002 edition) (incorporated by reference, see ''Referenced Standards'' in Chapter 1). Combination smoke alarms and visible notification appliances shall be supplied with power from one or more power sources as follows:

(a) A commercial light and power source along with a secondary power source; or

(b) A non-commercial alternating current (ac) power source along with a secondary power source.

809.3.1.3 Activation. All visible notification appliances within the residential dwelling unit providing notification of a building fire alarm shall be activated upon activation of the building fire alarm in the portion of the building containing the residential dwelling unit. All combination smoke alarms and visible notification appliances within the residential dwelling unit shall be activated upon smoke detection.

809.3.2 Residential Dwelling Unit Primary Entrance. Communication features shall be provided at the residential dwelling unit primary entrance and shall comply with 809.3.2.

809.3.2.1 Notification. A hardwired electric doorbell shall be provided. A button or switch shall be provided outside the residential dwelling unit primary entrance. Activation of the button or switch shall initiate an audible tone and visible signal within the residential dwelling unit. Where visible doorbell signals are located in sleeping areas, they shall have controls to deactivate the signal.

809.3.2.2 Identification. A means for visually identifying a visitor without opening the residential dwelling unit entry door shall be provided and shall allow for a minimum 180 degree range of view.

809.3.3 Site, Building, or Floor Entrance. Where a system, including a closed-circuit system, permitting voice communication between a visitor and the occupant of the residential dwelling unit is provided, the system shall comply with 708.4.

809.3.4 Weather Alert Systems. Where provided in emergency transportable housing units, weather alert systems shall provide audible and visual output.

810 Transportation Facilities

810.1 General. Transportation facilities shall comply with 810.

810.2 Bus Boarding and Alighting Areas. Bus boarding and alighting areas shall comply with 810.2.

810.2.1 Surface. Bus stop boarding and alighting areas shall have a firm, stable surface.

810.2.2 Dimensions. Bus stop boarding and alighting areas shall provide a clear length of 96 inches (2440 mm) minimum, measured perpendicular to the curb or vehicle roadway edge, and a clear width of 60 inches (1525 mm) minimum, measured parallel to the vehicle roadway.

810.2.3 Connection. Bus stop boarding and alighting areas shall be connected to streets, sidewalks, or pedestrian paths by an accessible route complying with 402.

810.2.4 Slope. Parallel to the roadway, the slope of the bus stop boarding and alighting area shall be the same as the roadway, to the maximum extent practicable. Perpendicular to the roadway, the slope of the bus stop boarding and alighting area shall not be steeper than 1:48.

810.3 Bus Shelters. Bus shelters shall provide a minimum clear floor or ground space complying with 305 entirely within the shelter. Bus shelters shall be connected by an accessible route complying with 402 to a boarding and alighting area complying with 810.2.

810.4 Bus Signs. Bus route identification signs shall comply with 703.5.1 through 703.5.4, and 703.5.7 and 703.5.8. In addition, to the maximum extent practicable, bus route identification signs shall comply with 703.5.5.

EXCEPTION: Bus schedules, timetables and maps that are posted at the bus stop or bus bay shall not be required to comply.

810.5 Rail Platforms. Rail platforms shall comply with 810.5.

810.5.1 Slope. Rail platforms shall not exceed a slope of 1:48 in all directions.

EXCEPTION: Where platforms serve vehicles operating on existing track or track laid in existing roadway, the slope of the platform parallel to the track shall be permitted to be equal to the slope (grade) of the roadway or existing track.

810.5.2 Detectable Warnings. Platform boarding edges not protected by platform screens or guards shall have detectable warnings complying with 705 along the full length of the public use area of the platform.

810.5.3 Platform and Vehicle Floor Coordination. Station platforms shall be positioned to coordinate with vehicles in accordance with the applicable requirements of 36 CFR Part 1192. Low-level platforms shall be 8 inches (205 mm) minimum above top of rail.

EXCEPTION: Where vehicles are boarded from sidewalks or street-level, low-level platforms shall be permitted to be less than 8 inches (205 mm).

810.6 Rail Station Signs. Rail station signs shall comply with 810.6.

EXCEPTION. Signs shall not be required to comply with 810.6.1 and 810.6.2 where audible signs are remotely transmitted to handheld receivers, or are user- or proximity-actuated.

810.6.1 Entrances. Where signs identify a station or its entrance, at least one sign at each entrance shall comply with 703.2 and shall be placed in uniform locations to the maximum extent practicable. Where signs identify a station that has no defined entrance, at least one sign shall comply with 703.2 and shall be placed in a central location.

810.6.2 Routes and Destinations. Lists of stations, routes and destinations served by the station which are located on boarding areas, platforms, or mezzanines shall comply with 703.5. At least one tactile sign identifying the specific station and complying with 703.2 shall be provided on each platform or boarding area. Signs covered by this requirement shall, to the maximum extent practicable, be placed in uniform locations within the system.

EXCEPTION: Where sign space is limited, characters shall not be required to exceed 3 inches (75 mm).

810.6.3 Station Names. Stations covered by this section shall have identification signs complying with 703.5. Signs shall be clearly visible and within the sight lines of standing and sitting passengers from within the vehicle on both sides when not obstructed by another vehicle.

810.7 Public Address Systems. Where public address systems convey audible information to the public, the same or equivalent information shall be provided in a visual format.

810.8 Clocks. Where clocks are provided for use by the public, the clock face shall be uncluttered so that its elements are clearly visible. Hands, numerals and digits shall contrast with the background either light-on-dark or dark-on-light. Where clocks are installed overhead, numerals and digits shall comply with 703.5.

810.9 Escalators. Where provided, escalators shall comply with the sections 6.1.3.5.6 and 6.1.3.6.5 of ASME A17.1 (incorporated by reference, see ''Referenced Standards'' in Chapter 1) and shall have a clear width of 32 inches (815 mm) minimum.

EXCEPTION: Existing escalators in key stations shall not be required to comply with 810.9.

810.10 Track Crossings. Where a circulation path serving boarding platforms crosses tracks, it shall comply with 402.

EXCEPTION: Openings for wheel flanges shall be permitted to be 2½ inches (64 mm) maximum.

811 STORAGE

811.1 General. Storage shall comply with 811.

811.2 Clear Floor or Ground Space. A clear floor or ground space complying with 305 shall be provided.

811.3 Height. Storage elements shall comply with at least one of the reach ranges specified in 308.

811.4 Operable Parts. Operable parts shall comply with 309.

CHAPTER 9: BUILT-IN ELEMENTS

901 GENERAL

901.1 Scope. The provisions of Chapter 9 shall apply where required by Chapter 2 or where referenced by a requirement in this document.

902 DINING SURFACES AND WORK SURFACES

902.1 General. Dining surfaces and work surfaces shall comply with 902.2 and 902.3.

EXCEPTION: Dining surfaces and work surfaces for children's use shall be permitted to comply with 902.4.

902.2 Clear Floor or Ground Space. A clear floor space complying with 305 positioned for a forward approach shall be provided. Knee and toe clearance complying with 306 shall be provided.

902.3 Height. The tops of dining surfaces and work surfaces shall be 28 inches (710 mm) minimum and 34 inches (865 mm) maximum above the finish floor or ground.

902.4 Dining Surfaces and Work Surfaces for Children's Use. Accessible dining surfaces and work surfaces for children's use shall comply with 902.4.

EXCEPTION: Dining surfaces and work surfaces that are used primarily by children 5 years and younger shall not be required to comply with 902.4 where a clear floor or ground space complying with 305 positioned for a parallel approach is provided.

902.4.1 Clear Floor or Ground Space. A clear floor space complying with 305 positioned for forward approach shall be provided. Knee and toe clearance complying with 306 shall be provided, except that knee clearance 24 inches (610 mm) minimum above the finish floor or ground shall be permitted.

902.4.2 Height. The tops of tables and counters shall be 26 inches (660 mm) minimum and 30 inches (760 mm) maximum above the finish floor or ground.

903 BENCHES

903.1 General. Benches shall comply with 903.

903.2 Clear Floor or Ground Space. Clear floor or ground space complying with 305 shall be provided and shall be positioned at the end of the bench seat and parallel to the short axis of the bench.

903.3 Size. Benches shall have seats that are 42 inches (1065 mm) long minimum and 20 inches (510 mm) deep minimum and 24 inches (610 mm) deep maximum.

903.4 Back Support. The bench shall provide for back support or shall be affixed to a wall. Back support shall be 42 inches (1065

mm) long minimum and shall extend from a point 2 inches (51 mm) maximum above the seat surface to a point 18 inches (455 mm) minimum above the seat surface. Back support shall be 2½ inches (64 mm) maximum from the rear edge of the seat measured horizontally.

903.5 Height. The top of the bench seat surface shall be 17 inches (430 mm) minimum and 19 inches (485 mm) maximum above the finish floor or ground.

903.6 Structural Strength. Allowable stresses shall not be exceeded for materials used when a vertical or horizontal force of 250 pounds (1112 N) is applied at any point on the seat, fastener, mounting device, or supporting structure.

903.7 Wet Locations. Where installed in wet locations, the surface of the seat shall be slip resistant and shall not accumulate water.

904 Check-Out Aisles and Sales and Service Counters

904.1 General. Check-out aisles and sales and service counters shall comply with the applicable requirements of 904.

904.2 Approach. All portions of counters required to comply with 904 shall be located adjacent to a walking surface complying with 403.

904.3 Check-Out Aisles. Check-out aisles shall comply with 904.3.

904.3.1 Aisle. Aisles shall comply with 403.

904.3.2 Counter. The counter surface height shall be 38 inches (965 mm) maximum above the finish floor or ground. The top of the counter edge protection shall be 2 inches (51 mm) maximum above the top of the counter surface on the aisle side of the check-out counter.

904.3.3 Check Writing Surfaces. Where provided, check writing surfaces shall comply with 902.3.

904.4 Sales and Service Counters. Sales counters and service counters shall comply with 904.4.1 or 904.4.2. The accessible portion of the counter top shall extend the same depth as the sales or service counter top.

Exception: In alterations, when the provision of a counter complying with 904.4 would result in a reduction of the number of existing counters at work stations or a reduction of the number of existing mail boxes, the counter shall be permitted to have a portion which is 24 inches (610 mm) long minimum complying with 904.4.1 provided that the required clear floor or ground space is centered on the accessible length of the counter.

904.4.1 Parallel Approach. A portion of the counter surface that is 36 inches (915 mm) long minimum and 36 inches (915 mm) high maximum above the finish floor shall be provided. A clear floor or ground space complying with 305 shall be positioned for a parallel approach adjacent to the 36 inch (915 mm) minimum length of counter.

Exception: Where the provided counter surface is less than 36 inches (915 mm) long, the entire counter surface shall be 36 inches (915 mm) high maximum above the finish floor.

904.4.2 Forward Approach. A portion of the counter surface that is 30 inches (760 mm) long minimum and 36 inches (915 mm) high maximum shall be provided. Knee and toe space complying with 306 shall be provided under the counter. A clear floor or ground space complying with 305 shall be positioned for a forward approach to the counter.

904.5 Food Service Lines. Counters in food service lines shall comply with 904.5.

904.5.1 Self-Service Shelves and Dispensing Devices. Self-service shelves and dispensing devices for tableware, dishware, condiments, food and beverages shall comply with 308.

904.5.2 Tray Slides. The tops of tray slides shall be 28 inches (710 mm) minimum and 34 inches (865 mm) maximum above the finish floor or ground.

904.6 Security Glazing. Where counters or teller windows have security glazing to separate personnel from the public, a method to facilitate voice communication shall be provided. Telephone handset devices, if provided, shall comply with 704.3.

Chapter 10: Recreation Facilities

1001 General

1001.1 Scope. The provisions of Chapter 10 shall apply where required by Chapter 2 or where referenced by a requirement in this document.

1002 Amusement Rides

1002.1 General. Amusement rides shall comply with 1002.

1002.2 Accessible Routes. Accessible routes serving amusement rides shall comply with Chapter 4.

Exceptions: 1. In load or unload areas and on amusement rides, where compliance with 405.2 is not structurally or operationally feasible, ramp slope shall be permitted to be 1:8 maximum.

2. In load or unload areas and on amusement rides, handrails provided along walking surfaces complying with 403 and required on ramps complying with 405 shall not be required to comply with 505 where compliance is not structurally or operationally feasible.

1002.3 Load and Unload Areas. A turning space complying with 304.2 and 304.3 shall be provided in load and unload areas.

1002.4 Wheelchair Spaces in Amusement Rides. Wheelchair spaces in amusement rides shall comply with 1002.4.

1002.4.1 Floor or Ground Surface. The floor or ground surface of wheelchair spaces shall be stable and firm.

1002.4.2 Slope. The floor or ground surface of wheelchair spaces shall have a slope not steeper than 1:48 when in the load and unload position.

1002.4.3 Gaps. Floors of amusement rides with wheelchair spaces and floors of load and unload areas shall be coordinated so that, when amusement rides are at rest in the load and unload position, the vertical difference between the floors shall be within plus or minus ⅝ inches (16 mm) and the horizontal gap shall be 3 inches (75 mm) maximum under normal passenger load conditions.

EXCEPTION: Where compliance is not operationally or structurally feasible, ramps, bridge plates, or similar devices complying with the applicable requirements of 36 CFR 1192.83(c) shall be provided.

1002.4.4 Clearances. Clearances for wheelchair spaces shall comply with 1002.4.4.

EXCEPTIONS: 1. Where provided, securement devices shall be permitted to overlap required clearances.

2. Wheelchair spaces shall be permitted to be mechanically or manually repositioned.

3. Wheelchair spaces shall not be required to comply with 307.4.

1002.4.4.1 Width and Length. Wheelchair spaces shall provide a clear width of 30 inches (760 mm) minimum and a clear length of 48 inches (1220 mm) minimum measured to 9 inches (230 mm) minimum above the floor surface.

1002.4.4.2 Side Entry. Where wheelchair spaces are entered only from the side, amusement rides shall be designed to permit sufficient maneuvering clearance for individuals using a wheelchair or mobility aid to enter and exit the ride.

1002.4.4.3 Permitted Protrusions in Wheelchair Spaces. Objects are permitted to protrude a distance of 6 inches (150 mm) maximum along the front of the wheelchair space, where located 9 inches (230 mm) minimum and 27 inches (685 mm) maximum above the floor or ground surface of the wheelchair space. Objects are permitted to protrude a distance of 25 inches (635 mm) maximum along the front of the wheelchair space, where located more than 27 inches (685 mm) above the floor or ground surface of the wheelchair space.

1002.4.5 Ride Entry. Openings providing entry to wheelchair spaces on amusement rides shall be 32 inches (815 mm) minimum clear.

1002.4.6 Approach. One side of the wheelchair space shall adjoin an accessible route when in the load and unload position.

1002.4.7 Companion Seats. Where the interior width of the amusement ride is greater than 53 inches (1345 mm), seating is provided for more than one rider, and the wheelchair is not required to be centered within the amusement ride, a companion seat shall be provided for each wheelchair space.

1002.4.7.1 Shoulder-to-Shoulder Seating. Where an amusement ride provides shoulder-to-shoulder seating, companion seats shall be shoulder-to-shoulder with the adjacent wheelchair space.

EXCEPTION: Where shoulder-to-shoulder companion seating is not operationally or structurally feasible, compliance with this requirement shall be required to the maximum extent practicable.

1002.5 Amusement Ride Seats Designed for Transfer. Amusement ride seats designed for transfer shall comply with 1002.5 when positioned for loading and unloading.

1002.5.1 Clear Floor or Ground Space. A clear floor or ground space complying with 305 shall be provided in the load and unload area adjacent to the amusement ride seats designed for transfer.

1002.5.2 Transfer Height. The height of amusement ride seats designed for transfer shall be 14 inches (355 mm) minimum and 24 inches (610 mm) maximum measured from the surface of the load and unload area.

1002.5.3 Transfer Entry. Where openings are provided for transfer to amusement ride seats, the openings shall provide clearance for transfer from a wheelchair or mobility aid to the amusement ride seat.

1002.5.4 Wheelchair Storage Space. Wheelchair storage spaces complying with 305 shall be provided in or adjacent to unload areas for each required amusement ride seat designed for transfer and shall not overlap any required means of egress or accessible route.

1002.6 Transfer Devices for Use with Amusement Rides. Transfer devices for use with amusement rides shall comply with 1002.6 when positioned for loading and unloading.

1002.6.1 Clear Floor or Ground Space. A clear floor or ground space complying with 305 shall be provided in the load and unload area adjacent to the transfer device.

1002.6.2 Transfer Height. The height of transfer device seats shall be 14 inches (355 mm) minimum and 24 inches (610 mm) maximum measured from the load and unload surface.

1002.6.3 Wheelchair Storage Space. Wheelchair storage spaces complying with 305 shall be provided in or adjacent to unload areas for each required transfer device and shall not overlap any required means of egress or accessible route.

1003 RECREATIONAL BOATING FACILITIES

1003.1 General. Recreational boating facilities shall comply with 1003.

1003.2 Accessible Routes. Accessible routes serving recreational boating facilities, including gangways and floating piers, shall comply with Chapter 4 except as modified by the exceptions in 1003.2.

1003.2.1 Boat Slips. Accessible routes serving boat slips shall be permitted to use the exceptions in 1003.2.1.

EXCEPTIONS: 1. Where an existing gangway or series of gangways is replaced or altered, an increase in the length of the gangway shall not be required to comply with 1003.2 unless required by 202.4.

2. Gangways shall not be required to comply with the maximum rise specified in 405.6.

3. Where the total length of a gangway or series of gangways serving as part of a required accessible route is 80 feet (24 m) minimum, gangways shall not be required to comply with 405.2.

4. Where facilities contain fewer than 25 boat slips and the total length of the gangway or series of gangways serving as part of a required accessible route is 30 feet (9145 mm) minimum, gangways shall not be required to comply with 405.2.

5. Where gangways connect to transition plates, landings specified by 405.7 shall not be required.

6. Where gangways and transition plates connect and are required to have handrails, handrail extensions shall not be required. Where handrail extensions are provided on gangways or transition plates, the handrail extensions shall not be required to be parallel with the ground or floor surface.

7. The cross slope specified in 403.3 and 405.3 for gangways, transition plates, and floating piers that are part of accessible routes shall be measured in the static position.

8. Changes in level complying with 303.3 and 303.4 shall be permitted on the surfaces of gangways and boat launch ramps.

1003.2.2 Boarding Piers at Boat Launch Ramps. Accessible routes serving boarding piers at boat launch ramps shall be permitted to use the exceptions in 1003.2.2.

EXCEPTIONS: 1. Accessible routes serving floating boarding piers shall be permitted to use Exceptions 1, 2, 5, 6, 7 and 8 in 1003.2.1.

2. Where the total length of the gangway or series of gangways serving as part of a required accessible route is 30 feet (9145 mm) minimum, gangways shall not be required to comply with 405.2.

3. Where the accessible route serving a floating boarding pier or skid pier is located within a boat launch ramp, the portion of the accessible route located within the boat launch ramp shall not be required to comply with 405.

1003.3 Clearances. Clearances at boat slips and on boarding piers at boat launch ramps shall comply with 1003.3.

1003.3.1 Boat Slip Clearance. Boat slips shall provide clear pier space 60 inches (1525 mm) wide minimum and at least as long as the boat slips. Each 10 feet (3050 mm) maximum of linear pier edge serving boat slips shall contain at least one continuous clear opening 60 inches (1525 mm) wide minimum.

EXCEPTIONS: 1. Clear pier space shall be permitted to be 36 inches (915 mm) wide minimum for a length of 24 inches (610 mm) maximum, provided that multiple 36 inch (915 mm) wide segments are separated by segments that are 60 inches (1525 mm) wide minimum and 60 inches (1525 mm) long minimum.

2. Edge protection shall be permitted at the continuous clear openings, provided that it is 4 inches (100 mm) high maximum and 2 inches (51 mm) wide maximum.

3. In existing piers, clear pier space shall be permitted to be located perpendicular to the boat slip and shall extend the width of the boat slip, where the facility has at least one boat slip complying with 1003.3, and further compliance with 1003.3 would result in a reduction in the number of boat slips available or result in a reduction of the widths of existing slips.

1003.3.2 Boarding Pier Clearances. Boarding piers at boat launch ramps shall provide clear pier space 60 inches (1525 mm) wide minimum and shall extend the full length of the boarding pier. Every 10 feet (3050 mm) maximum of linear pier edge shall contain at least one continuous clear opening 60 inches (1525 mm) wide minimum.

EXCEPTIONS: 1. The clear pier space shall be permitted to be 36 inches (915 mm) wide minimum for a length of 24 inches (610 mm) maximum provided that multiple 36 inch (915 mm) wide segments are separated by segments that are 60 inches (1525 mm) wide minimum and 60 inches (1525 mm) long minimum.

2. Edge protection shall be permitted at the continuous clear openings provided that it is 4 inches (100 mm) high maximum and 2 inches (51 mm) wide maximum.

1004 EXERCISE MACHINES AND EQUIPMENT

1004.1 Clear Floor Space. Exercise machines and equipment shall have a clear floor space complying with 305 positioned for transfer or for use by an individual seated in a wheelchair. Clear floor or ground spaces required at exercise machines and equipment shall be permitted to overlap.

1005 FISHING PIERS AND PLATFORMS

1005.1 Accessible Routes. Accessible routes serving fishing piers and platforms, including gangways and floating piers, shall comply with Chapter 4.

EXCEPTIONS: 1. Accessible routes serving floating fishing piers and platforms shall be permitted to use Exceptions 1, 2, 5, 6, 7 and 8 in 1003.2.1.

2. Where the total length of the gangway or series of gangways serving as part of a required accessible route is 30 feet (9145 mm) minimum, gangways shall not be required to comply with 405.2.

1005.2 Railings. Where provided, railings, guards, or handrails shall comply with 1005.2.

1005.2.1 Height. At least 25 percent of the railings, guards, or handrails shall be 34

inches (865 mm) maximum above the ground or deck surface.

EXCEPTION: Where a guard complying with sections 1003.2.12.1 and 1003.2.12.2 of the International Building Code (2000 edition) or sections 1012.2 and 1012.3 of the International Building Code (2003 edition) (incorporated by reference, see ''Referenced Standards'' in Chapter 1) is provided, the guard shall not be required to comply with 1005.2.1.

1005.2.1.1 Dispersion. Railings, guards, or handrails required to comply with 1005.2.1 shall be dispersed throughout the fishing pier or platform.

1005.3 Edge Protection. Where railings, guards, or handrails complying with 1005.2 are provided, edge protection complying with 1005.3.1 or 1005.3.2 shall be provided.

1005.3.1 Curb or Barrier. Curbs or barriers shall extend 2 inches (51 mm) minimum above the surface of the fishing pier or platform.

1005.3.2 Extended Ground or Deck Surface. The ground or deck surface shall extend 12 inches (305 mm) minimum beyond the inside face of the railing. Toe clearance shall be provided and shall be 30 inches (760 mm) wide minimum and 9 inches (230 mm) minimum above the ground or deck surface beyond the railing.

1005.4 Clear Floor or Ground Space. At each location where there are railings, guards, or handrails complying with 1005.2.1, a clear floor or ground space complying with 305 shall be provided. Where there are no railings, guards, or handrails, at least one clear floor or ground space complying with 305 shall be provided on the fishing pier or platform.

1005.5 Turning Space. At least one turning space complying with 304.3 shall be provided on fishing piers and platforms.

1006 GOLF FACILITIES

1006.1 General. Golf facilities shall comply with 1006.

1006.2 Accessible Routes. Accessible routes serving teeing grounds, practice teeing grounds, putting greens, practice putting greens, teeing stations at driving ranges, course weather shelters, golf car rental areas, bag drop areas, and course toilet rooms shall comply with Chapter 4 and shall be 48 inches (1220 mm) wide minimum. Where handrails are provided, accessible routes shall be 60 inches (1525 mm) wide minimum.

EXCEPTION: Handrails shall not be required on golf courses. Where handrails are provided on golf courses, the handrails shall not be required to comply with 505.

1006.3 Golf Car Passages. Golf car passages shall comply with 1006.3.

1006.3.1 Clear Width. The clear width of golf car passages shall be 48 inches (1220 mm) minimum.

1006.3.2 Barriers. Where curbs or other constructed barriers prevent golf cars from entering a fairway, openings 60 inches (1525 mm) wide minimum shall be provided at intervals not to exceed 75 yards (69 m).

1006.4 Weather Shelters. A clear floor or ground space 60 inches (1525 mm) minimum by 96 inches (2440 mm) minimum shall be provided within weather shelters.

1007 MINIATURE GOLF FACILITIES

1007.1 General. Miniature golf facilities shall comply with 1007.

1007.2 Accessible Routes. Accessible routes serving holes on miniature golf courses shall comply with Chapter 4. Accessible routes located on playing surfaces of miniature golf holes shall be permitted to use the exceptions in 1007.2.

EXCEPTIONS: 1. Playing surfaces shall not be required to comply with 302.2.

2. Where accessible routes intersect playing surfaces of holes, a 1 inch (25 mm) maximum curb shall be permitted for a width of 32 inches (815 mm) minimum.

3. A slope not steeper than 1:4 for a 4 inch (100 mm) maximum rise shall be permitted.

4. Ramp landing slopes specified by 405.7.1 shall be permitted to be 1:20 maximum.

5. Ramp landing length specified by 405.7.3 shall be permitted to be 48 inches (1220 mm) long minimum.

6. Ramp landing size specified by 405.7.4 shall be permitted to be 48 inches (1220 mm) minimum by 60 inches (1525 mm) minimum.

7. Handrails shall not be required on holes. Where handrails are provided on holes, the handrails shall not be required to comply with 505.

1007.3 Miniature Golf Holes. Miniature golf holes shall comply with 1007.3.

1007.3.1 Start of Play. A clear floor or ground space 48 inches (1220 mm) minimum by 60 inches (1525 mm) minimum with slopes not steeper than 1:48 shall be provided at the start of play.

1007.3.2 Golf Club Reach Range Area. All areas within holes where golf balls rest shall be within 36 inches (915 mm) maximum of a clear floor or ground space 36 inches (915 mm) wide minimum and 48 inches (1220 mm) long minimum having a running slope not steeper than 1:20. The clear floor or ground space shall be served by an accessible route.

1008 PLAY AREAS

1008.1 General. Play areas shall comply with 1008.

1008.2 Accessible Routes. Accessible routes serving play areas shall comply with Chapter 4 and 1008.2 and shall be permitted to use the exceptions in 1008.2.1 through 1008.2.3. Where accessible routes serve ground level play components, the vertical clearance shall be 80 inches high (2030 mm) minimum.

1008.2.1 Ground Level and Elevated Play Components. Accessible routes serving

ground level play components and elevated play components shall be permitted to use the exceptions in 1008.2.1.

EXCEPTIONS: 1. Transfer systems complying with 1008.3 shall be permitted to connect elevated play components except where 20 or more elevated play components are provided no more than 25 percent of the elevated play components shall be permitted to be connected by transfer systems.

2. Where transfer systems are provided, an elevated play component shall be permitted to connect to another elevated play component as part of an accessible route.

1008.2.2 Soft Contained Play Structures. Accessible routes serving soft contained play structures shall be permitted to use the exception in 1008.2.2.

EXCEPTION: Transfer systems complying with 1008.3 shall be permitted to be used as part of an accessible route.

1008.2.3 Water Play Components. Accessible routes serving water play components shall be permitted to use the exceptions in 1008.2.3.

EXCEPTIONS: 1. Where the surface of the accessible route, clear floor or ground spaces, or turning spaces serving water play components is submerged, compliance with 302, 403.3, 405.2, 405.3, and 1008.2.6 shall not be required.

2. Transfer systems complying with 1008.3 shall be permitted to connect elevated play components in water.

1008.2.4 Clear Width. Accessible routes connecting play components shall provide a clear width complying with 1008.2.4.

1008.2.4.1 Ground Level. At ground level, the clear width of accessible routes shall be 60 inches (1525 mm) minimum.

EXCEPTIONS: 1. In play areas less than 1000 square feet (93 m^2), the clear width of accessible routes shall be permitted to be 44 inches (1120 mm) minimum, if at least one turning space complying with 304.3 is provided where the restricted accessible route exceeds 30 feet (9145 mm) in length.

2. The clear width of accessible routes shall be permitted to be 36 inches (915 mm) minimum for a distance of 60 inches (1525 mm) maximum provided that multiple reduced width segments are separated by segments that are 60 inches (1525 mm) wide minimum and 60 inches (1525 mm) long minimum.

1008.2.4.2 Elevated. The clear width of accessible routes connecting elevated play components shall be 36 inches (915 mm) minimum.

EXCEPTIONS: 1. The clear width of accessible routes connecting elevated play components shall be permitted to be reduced to 32 inches (815 mm) minimum for a distance of 24 inches (610 mm) maximum provided that reduced width segments are separated by segments that are 48 inches (1220 mm) long minimum and 36 inches (915 mm) wide minimum.

2. The clear width of transfer systems connecting elevated play components shall be permitted to be 24 inches (610 mm) minimum.

1008.2.5 Ramps. Within play areas, ramps connecting ground level play components and ramps connecting elevated play components shall comply with 1008.2.5.

1008.2.5.1 Ground Level. Ramp runs connecting ground level play components shall have a running slope not steeper than 1:16.

1008.2.5.2 Elevated. The rise for any ramp run connecting elevated play components shall be 12 inches (305 mm) maximum.

1008.2.5.3 Handrails. Where required on ramps serving play components, the handrails shall comply with 505 except as modified by 1008.2.5.3.

EXCEPTIONS: 1. Handrails shall not be required on ramps located within ground level use zones.

2. Handrail extensions shall not be required.

1008.2.5.3.1 Handrail Gripping Surfaces. Handrail gripping surfaces with a circular cross section shall have an outside diameter of 0.95 inch (24 mm) minimum and 1.55 inches (39 mm) maximum. Where the shape of the gripping surface is non-circular, the handrail shall provide an equivalent gripping surface.

1008.2.5.3.2 Handrail Height. The top of handrail gripping surfaces shall be 20 inches (510 mm) minimum and 28 inches (710 mm) maximum above the ramp surface.

1008.2.6 Ground Surfaces. Ground surfaces on accessible routes, clear floor or ground spaces, and turning spaces shall comply with 1008.2.6.

1008.2.6.1 Accessibility. Ground surfaces shall comply with ASTM F1951 (incorporated by reference, see ''Referenced Standards'' in Chapter 1). Ground surfaces shall be inspected and maintained regularly and frequently to ensure continued compliance with ASTM F1951.

1008.2.6.2 Use Zones. Ground surfaces located within use zones shall comply with ASTM F1292 (1999 edition or 2004 edition) (incorporated by reference, see ''Referenced Standards'' in Chapter 1).

1008.3 Transfer Systems. Where transfer systems are provided to connect to elevated play components, transfer systems shall comply with 1008.3.

1008.3.1 Transfer Platforms. Transfer platforms shall be provided where transfer is intended from wheelchairs or other mobility aids. Transfer platforms shall comply with 1008.3.1.

1008.3.1.1 Size. Transfer platforms shall have level surfaces 14 inches (355 mm) deep minimum and 24 inches (610 mm) wide minimum.

1008.3.1.2 Height. The height of transfer platforms shall be 11 inches (280 mm) minimum and 18 inches (455 mm) maximum measured to the top of the surface from the ground or floor surface.

1008.3.1.3 Transfer Space. A transfer space complying with 305.2 and 305.3 shall be provided adjacent to the transfer platform. The 48 inch (1220 mm) long minimum dimension of the transfer space shall be centered on and parallel to the 24 inch (610 mm) long minimum side of the transfer platform. The side of the transfer platform serving the transfer space shall be unobstructed.

1008.3.1.4 Transfer Supports. At least one means of support for transferring shall be provided.

1008.3.2 Transfer Steps. Transfer steps shall be provided where movement is intended from transfer platforms to levels with elevated play components required to be on accessible routes. Transfer steps shall comply with 1008.3.2.

1008.3.2.1 Size. Transfer steps shall have level surfaces 14 inches (355 mm) deep minimum and 24 inches (610 mm) wide minimum.

1008.3.2.2 Height. Each transfer step shall be 8 inches (205 mm) high maximum.

1008.3.2.3 Transfer Supports. At least one means of support for transferring shall be provided.

1008.4 Play Components. Ground level play components on accessible routes and elevated play components connected by ramps shall comply with 1008.4.

1008.4.1 Turning Space. At least one turning space complying with 304 shall be provided on the same level as play components. Where swings are provided, the turning space shall be located immediately adjacent to the swing.

1008.4.2 Clear Floor or Ground Space. Clear floor or ground space complying with 305.2 and 305.3 shall be provided at play components.

1008.4.3 Play Tables. Where play tables are provided, knee clearance 24 inches (610 mm) high minimum, 17 inches deep (430 mm) minimum, and 30 inches (760 mm) wide minimum shall be provided. The tops of rims, curbs, or other obstructions shall be 31 inches (785 mm) high maximum.

EXCEPTION: Play tables designed and constructed primarily for children 5 years and younger shall not be required to provide knee clearance where the clear floor or ground space required by 1008.4.2 is arranged for a parallel approach.

1008.4.4 Entry Points and Seats. Where play components require transfer to entry points or seats, the entry points or seats shall be 11 inches (280 mm) minimum and 24 inches (610 mm) maximum from the clear floor or ground space.

EXCEPTION: Entry points of slides shall not be required to comply with 1008.4.4.

1008.4.5 Transfer Supports. Where play components require transfer to entry points or seats, at least one means of support for transferring shall be provided.

1009 SWIMMING POOLS, WADING POOLS, AND SPAS

1009.1 General. Where provided, pool lifts, sloped entries, transfer walls, transfer systems, and pool stairs shall comply with 1009.

1009.2 Pool Lifts. Pool lifts shall comply with 1009.2.

1009.2.1 Pool Lift Location. Pool lifts shall be located where the water level does not exceed 48 inches (1220 mm).

EXCEPTIONS: 1. Where the entire pool depth is greater than 48 inches (1220 mm), compliance with 1009.2.1 shall not be required.

2. Where multiple pool lift locations are provided, no more than one pool lift shall be required to be located in an area where the water level is 48 inches (1220 mm) maximum.

1009.2.2 Seat Location. In the raised position, the centerline of the seat shall be located over the deck and 16 inches (405 mm) minimum from the edge of the pool. The deck surface between the centerline of the seat and the pool edge shall have a slope not steeper than 1:48.

1009.2.3 Clear Deck Space. On the side of the seat opposite the water, a clear deck space shall be provided parallel with the seat. The space shall be 36 inches (915 mm) wide minimum and shall extend forward 48 inches (1220 mm) minimum from a line located 12 inches (305 mm) behind the rear edge of the seat. The clear deck space shall have a slope not steeper than 1:48.

1009.2.4 Seat Height. The height of the lift seat shall be designed to allow a stop at 16 inches (405 mm) minimum to 19 inches (485 mm) maximum measured from the deck to the top of the seat surface when in the raised (load) position.

1009.2.5 Seat Width. The seat shall be 16 inches (405 mm) wide minimum.

1009.2.6 Footrests and Armrests. Footrests shall be provided and shall move with the seat. If provided, the armrest positioned opposite the water shall be removable or shall fold clear of the seat when the seat is in the raised (load) position.

EXCEPTION: Footrests shall not be required on pool lifts provided in spas.

1009.2.7 Operation. The lift shall be capable of unassisted operation from both the deck and water levels. Controls and operating mechanisms shall be unobstructed when the lift is in use and shall comply with 309.4.

1009.2.8 Submerged Depth. The lift shall be designed so that the seat will submerge to a water depth of 18 inches (455 mm) minimum below the stationary water level.

1009.2.9 Lifting Capacity. Single person pool lifts shall have a weight capacity of 300 pounds. (136 kg) minimum and be capable of sustaining a static load of at least one and a half times the rated load.

1009.3 Sloped Entries. Sloped entries shall comply with 1009.3.

1009.3.1 Sloped Entries. Sloped entries shall comply with Chapter 4 except as modified in 1109.3.1 through 1109.3.3.

EXCEPTION: Where sloped entries are provided, the surfaces shall not be required to be slip resistant.

1009.3.2 Submerged Depth. Sloped entries shall extend to a depth of 24 inches (610 mm) minimum and 30 inches (760 mm) maximum below the stationary water level. Where landings are required by 405.7, at least one landing shall be located 24 inches (610 mm) minimum and 30 inches (760 mm) maximum below the stationary water level.

EXCEPTION: In wading pools, the sloped entry and landings, if provided, shall extend to the deepest part of the wading pool.

1009.3.3 Handrails. At least two handrails complying with 505 shall be provided on the sloped entry. The clear width between required handrails shall be 33 inches (840 mm) minimum and 38 inches (965 mm) maximum.

EXCEPTIONS: 1. Handrail extensions specified by 505.10.1 shall not be required at the bottom landing serving a sloped entry.

2. Where a sloped entry is provided for wave action pools, leisure rivers, sand bottom pools, and other pools where user access is limited to one area, the handrails shall not be required to comply with the clear width requirements of 1009.3.3.

3. Sloped entries in wading pools shall not be required to provide handrails complying with 1009.3.3. If provided, handrails on sloped entries in wading pools shall not be required to comply with 505.

1009.4 Transfer Walls. Transfer walls shall comply with 1009.4.

1009.4.1 Clear Deck Space. A clear deck space of 60 inches (1525 mm) minimum by 60 inches (1525 mm) minimum with a slope not steeper than 1:48 shall be provided at the base of the transfer wall. Where one grab bar is provided, the clear deck space shall be centered on the grab bar. Where two grab bars are provided, the clear deck space shall be centered on the clearance between the grab bars.

1009.4.2 Height. The height of the transfer wall shall be 16 inches (405 mm) minimum and 19 inches (485 mm) maximum measured from the deck.

1009.4.3 Wall Depth and Length. The depth of the transfer wall shall be 12 inches (305 mm) minimum and 16 inches (405 mm) maximum. The length of the transfer wall shall be 60 inches (1525 mm) minimum and shall be centered on the clear deck space.

1009.4.4 Surface. Surfaces of transfer walls shall not be sharp and shall have rounded edges.

1009.4.5 Grab Bars. At least one grab bar complying with 609 shall be provided on the transfer wall. Grab bars shall be perpendicular to the pool wall and shall extend the full depth of the transfer wall. The top of the gripping surface shall be 4 inches (100 mm) minimum and 6 inches (150 mm) maximum above transfer walls. Where one grab bar is provided, clearance shall be 24 inches (610 mm) minimum on both sides of the grab bar. Where two grab bars are provided, clearance between grab bars shall be 24 inches (610 mm) minimum.

EXCEPTION: Grab bars on transfer walls shall not be required to comply with 609.4.

1009.5 Transfer Systems. Transfer systems shall comply with 1009.5.

1009.5.1 Transfer Platform. A transfer platform shall be provided at the head of each transfer system. Transfer platforms shall provide 19 inches (485 mm) minimum clear depth and 24 inches (610 mm) minimum clear width.

1009.5.2 Transfer Space. A transfer space of 60 inches (1525 mm) minimum by 60 inches (1525 mm) minimum with a slope not steeper than 1:48 shall be provided at the base of the transfer platform surface and shall be centered along a 24 inch (610 mm) minimum side of the transfer platform. The side of the transfer platform serving the transfer space shall be unobstructed.

1009.5.3 Height. The height of the transfer platform shall comply with 1009.4.2.

1009.5.4 Transfer Steps. Transfer step height shall be 8 inches (205 mm) maximum. The surface of the bottom tread shall extend to a water depth of 18 inches (455 mm) minimum below the stationary water level.

1009.5.5 Surface. The surface of the transfer system shall not be sharp and shall have rounded edges.

1009.5.6 Size. Each transfer step shall have a tread clear depth of 14 inches (355 mm) minimum and 17 inches (430 mm) maximum and shall have a tread clear width of 24 inches (610 mm) minimum.

1009.5.7 Grab Bars. At least one grab bar on each transfer step and the transfer platform or a continuous grab bar serving each transfer step and the transfer platform shall be provided. Where a grab bar is provided on each step, the tops of gripping surfaces shall be 4 inches (100 mm) minimum and 6 inches (150 mm) maximum above each step and transfer platform. Where a continuous grab bar is provided, the top of the gripping surface shall be 4 inches (100 mm) minimum and 6 inches (150 mm) maximum above the step nosing and transfer platform. Grab bars shall comply with 609 and be located on at least one side of the transfer system. The grab bar located at the transfer platform shall not obstruct transfer.

EXCEPTION: Grab bars on transfer systems shall not be required to comply with 609.4.

1009.6 Pool Stairs. Pool stairs shall comply with 1009.6.

1009.6.1 Pool Stairs. Pool stairs shall comply with 504.

EXCEPTION: Pool step riser heights shall not be required to be 4 inches (100 mm) high

minimum and 7 inches (180 mm) high maximum provided that riser heights are uniform.

1009.6.2 Handrails. The width between handrails shall be 20 inches (510 mm) minimum and 24 inches (610 mm) maximum. Handrail extensions required by 505.10.3 shall not be required on pool stairs.

1010 Shooting Facilities With Firing Positions

1010.1 Turning Space. A circular turning space 60 inches (1525 mm) diameter minimum with slopes not steeper than 1:48 shall be provided at shooting facilities with firing positions.

1011 Outdoor Constructed Features

1011.1 General. All outdoor constructed features shall comply with 1011.2 and 1011.3. Outdoor constructed features specified in 1011.4 through 1011.8 shall comply with those provisions, as applicable.

1011.2 Clear Ground Space. A clear ground space complying with 1011.2 shall be provided at outdoor constructed features.

Exceptions: 1. Where individual outdoor constructed features are altered and the ground surface is not altered, the clear ground space shall not be required to comply with 1011.2.2 and 1011.2.3.

2. In alterations, when an entity determines that a condition in 1019 does not permit full compliance with a specific provision in 1011.2, the clear ground space shall comply with the provision to the extent practicable.

1011.2.1 Size and Location. The size and location of the clear ground space shall be in accordance with Table 1011.2.1. Unless otherwise specified in Table 1011.2.1, one full unobstructed side of the clear ground space shall adjoin or overlap an outdoor recreation access route or a trail, as applicable, or another clear ground space.

Table 1011.2.1—Clear Ground Space

Outdoor constructed feature	Minimum size and location
Picnic tables	36 inches (915 mm) on all usable sides of the table measured from the back edge of the benches.
Fire rings, grills, fireplaces, and woodstoves.	48 inches (1220 mm) by 48 inches (1220 mm) on all usable sides of the fire ring, grill, fireplace, and woodstove Center the space on each usable side of the grill, fireplace, and woodstove.
Trash and recycling receptacles.	36 inches (915 mm) by 48 inches (1220 mm) positioned for forward approach to the receptacle opening; or 30 inches (760 mm) by 60 inches (1525 mm) positioned for a parallel approach to the receptacle opening.
Water hydrants	72 inches (1830 mm) by 48 inches (1220 mm) with the long side of the space adjoining or overlapping an outdoor recreation access route or trail, as applicable, or another clear ground space. Locate the space so that the water spout is 11 inches (280 mm) minimum and 12 inches (305 mm) maximum from the rear center of the long side of the space.
Utility and sewage hookups.	30 inches (760 mm) by 60 inches (1525 mm) with the long side of the space adjoining or overlapping an accessible parking space or pull-up space for recreational vehicles. Locate the space so that the hook-ups are at the rear center of the space. Bollards or other barriers shall not obstruct the clear ground space in front of the hook-ups.
Outdoor rinsing showers	60 inches (1525 mm) by 60 inches (1525 mm) centered on the shower heads. Locate the space so that the shower pedestal or wall with the shower head are at the rear end of the space.
Benches	36 inches (915 mm) by 48 inches (1220 mm) positioned near the bench with one side of the space adjoining an outdoor recreation access route or trail, as applicable. The clear ground space shall not overlap the outdoor recreation access route or trail, or another clear ground space.
Viewing Scopes	36 inches (915 mm) by 48 inches (1220 mm) positioned for forward approach to the viewing scope. Provide knee and toe clearance complying with 306 under the viewing scope. Locate the space so that the eyepiece is centered on the space.

1011.2.2 Surface. The surface of the clear ground space shall be firm and stable.

1011.2.3 Slope. The slope of the clear ground space surface shall not be steeper than 1:48 in any direction.

Exception: Where the surface is other than asphalt, concrete, or boards, slopes not steeper than 1:20 shall be permitted when necessary for drainage.

1011.2.4 Openings. Openings in the clear ground space surface shall not allow the passage of a sphere more than ½ inch (13 mm) in diameter.

1011.3 Operable Parts. Operable parts shall comply with 309.3 and 309.4.

Exceptions: 1. Fire rings, grills, fireplaces, wood stoves, water hydrants, and water utility hookups shall comply with 309.4 to the extent practicable.

2. Trash and recycling receptacles with hinged lids and controls to keep out large animals shall comply with 309.4 to the extent practicable.

3. Dumpster type trash and recycling receptacles shall not be required to comply with 309.3 and 309.4.

4. Sewage hatches shall not be required to comply with 309.3 and 309.4.

1011.4 Picnic Tables. Picnic tables shall comply with 1011.4.

1011.4.1 Height. The tops of picnic tables shall comply with 902.3.

1011.4.2 Wheelchair Space. Picnic tables shall provide at least one wheelchair space for each 24 linear feet (7320 mm) of usable table surface perimeter. Wheelchair spaces shall be 30 inches (760 mm) minimum by 48 inches (1220 mm) minimum. Wheelchair spaces shall be positioned for a forward approach to the table and provide knee and toe clearance complying with 306 under the table.

1011.5 Fire Rings, Grills, Fireplaces, and Wood Stoves. Fire rings, grills, fireplaces, and wood stoves shall comply with 1011.5.

1011.5.1 Fire Building Surfaces. Fire building surfaces shall be 9 inches (230 mm) minimum above the ground.

1011.5.2 Cooking Surfaces. Where provided, cooking surfaces shall be 15 inches (380 mm) minimum and 34 inches (865 mm) maximum above the ground.

1011.5.3 Raised Edges or Walls. Where fire rings, grills, or fireplaces are constructed with raised edges or walls, the depth of the raised edge or wall shall be 10 inches (255 mm) maximum.

1011.6 Water Spouts. Water spouts at water hydrants and water utility hook-ups shall be 28 inches (710 mm) minimum and 36 inches (915 mm) maximum above the ground.

1011.7 Outdoor Rinsing Showers. Outdoor rinsing showers shall provide at least one hand-held shower spray unit with a hose 59 inches (1500 mm) long minimum. The hand-held shower spray unit shall have at least one fixed position located 15 inches minimum (380 mm) and 48 inches (1220 mm) maximum above the ground.

EXCEPTION: Where vandalism is a consideration, a fixed shower head located at 48 in (1220 mm) above the ground shall be permitted in place of a hand-held shower spray unit.

1011.8 Viewing Scopes. Eyepieces on viewing scopes shall be 43 inches (1090 mm) minimum and 51 inches (1295 mm) maximum above the ground.

1012 Parking Spaces Within Camping Units and Picnic Units and Pull-up Spaces at Dump Stations

1012.1 General. Parking spaces within camping units and picnic units with mobility features and pull-up spaces for recreational vehicles at dump stations shall comply with 1012.

1012.2 Recreational Vehicles. Parking spaces and pull-up spaces for recreational vehicles shall be 20 feet (6100 mm) wide minimum.

EXCEPTION: Where two adjacent parking spaces are provided for recreational vehicles, one parking space shall be permitted to be 16 feet (4880 mm) wide minimum.

1012.3 Other Vehicles. Parking spaces for vehicles, other than recreational vehicles, shall be 16 feet (4880 mm) wide minimum.

EXCEPTION: Where two adjacent parking spaces are provided for vehicles, other than recreational vehicles, one parking space shall be permitted to be 8 feet (2440 mm) wide minimum.

1012.4 Surface. The surface of parking spaces and pull-up spaces shall be firm and stable.

1012.5 Slope. The slope of the surface of parking spaces and pull-up spaces shall not be steeper than 1:48 in any direction.

EXCEPTION: Where the surface is other than asphalt, concrete, or boards, slopes not steeper than 1:20 shall be permitted when necessary for drainage.

1013 Tent Pads and Tent Platforms

1013.1 General. Tent pads and tent platforms shall comply with 1013.

EXCEPTION: When an entity determines that a condition in 1019 does not permit full compliance with a specific provision in 1013, the tent pad and tent platform shall comply with the provision to the extent practicable.

1013.2 Clear Ground Space. Clear ground space complying with 1013.2 shall be provided on all usable sides of tent pads and tent platforms.

1013.2.1 Size. The clear ground space shall be 48 inches (1220 mm) wide minimum.

1013.2.2 Surface. The surface of the clear ground space shall be firm and stable. The surface shall allow use of tent stakes and other tent securement devices.

1013.3 Slope. The slope of the surface of tent pads, tent platforms, and clear ground spaces shall not be steeper than 1:48 in any direction.

EXCEPTION: Where the surface is other than asphalt, concrete, or boards, slopes not steeper than 1:20 shall be permitted where necessary for drainage.

1013.4 Height. Tent platforms shall be 19 inches (485 mm) high maximum measured from the clear ground space to the tent platform surface.

1014 Camp Shelters

1014.1 General. Camp shelters shall comply with 1014.

EXCEPTIONS: 1. When an entity determines that a condition in 1019 does not permit full compliance with a specific provision in 1014, the camp shelter shall comply with the provision to the extent practicable.

2. Camp shelters shall not be required to comply with 307.

1014.2 Entrance. Camp shelters shall provide an entrance complying with 1014.2.1 or 1014.2.2.

1014.2.1 Transfer Access. Where transfer access is provided at the entrance to a camp shelter, the entrance shall comply with 1014.2.1.

1014.2.1.1 Clear Ground Space. A clear ground space shall be provided at the entrance to the camp shelter. The clear ground space shall be 36 inches (915 mm) minimum by 48 inches (1220 mm) minimum and shall be positioned for a parallel approach to the camp shelter. One full unobstructed side of the clear ground space shall adjoin or overlap an outdoor recreation access route or trail, as applicable, or another clear ground space.

1014.2.1.1.1 Surface. The surface of the clear ground space shall be firm and stable.

1014.2.1.1.2 Slope. The slope of the surface of the clear ground space shall not be steeper than 1:48 in any direction.

EXCEPTION: Where the surface is other than asphalt, concrete, or boards, slopes not steeper than 1:20 shall be permitted where necessary for drainage.

1014.2.1.2 Floor Height. The camp shelter floor at the entrance shall be 19 inches (485 mm) high maximum measured from the clear ground space.

1014.2.2 Roll-in Access. Where roll-in access is provided at the entrance to a camp shelter, the entrance shall comply with 1014.2.2.

1014.2.2.1 Level or Sloped Entry Route. Camp shelters providing roll-in access shall have a level or sloped entry route complying 1016 or 1017, as applicable.

1014.2.2.2 Turning Space. A turning space complying with 304.3 shall be provided within the camp shelter.

1014.3 Floor. The floor within camp shelters shall comply with 1014.3.

1014.3.1 Surface. The floor surface shall be firm and stable.

1014.3.2 Slope. The slope of the floor surface shall not be steeper than 1:48 in any direction.

EXCEPTION: Where the floor surface is other than asphalt, concrete, or boards, slopes not steeper than 1:20 shall be permitted when necessary for drainage.

1015 VIEWING AREAS

1015.1 General. Viewing areas shall comply with 1015.

EXCEPTION: In alterations, when an entity determines that a condition in 1019 does not permit full compliance with a specific provision in 1015, the viewing area shall comply with the provision to the extent practicable.

1015.2 Clear Ground Space. A clear ground space shall be provided at each distinct viewing location. The clear ground space shall be 36 inches (915 mm) minimum by 48 inches (1220 mm) minimum and shall be positioned for either a forward or parallel approach to the viewing location. One full unobstructed side of the clear ground space shall adjoin or overlap an outdoor recreation access route or trail, as applicable, or another clear ground space.

1015.3 Viewing Space. Each distinct viewing location shall provide a viewing space adjacent to the clear ground space required by 1015.2 through which the point of interest is viewable. The viewing space shall be 32 inches (815 mm) maximum and 51 inches (1295 mm) minimum high above the ground and shall extend the full width of the clear ground space.

EXCEPTION: Guards or similar safety barriers shall be permitted to obstruct the viewing space to the extent the obstruction is necessary for the guard or safety barrier to serve its intended purpose.

1015.4 Turning Space. A turning space complying with 304.3 shall be provided within viewing areas.

1015.5 Surface. The surface of clear ground spaces and turning spaces shall be firm and stable.

1015.6 Slope. The slope of the surface of clear ground spaces and turning spaces shall not be steeper than 1:48 in any direction.

EXCEPTION: Where the surface is other than asphalt, concrete, or boards, slopes not steeper than 1:20 shall be permitted when necessary for drainage.

1016 OUTDOOR RECREATION ACCESS ROUTES

1016.1 General. Outdoor recreation access routes shall comply with 1016.

EXCEPTIONS: 1. In alterations to existing camping facilities, picnic facilities, and trailheads, when an entity determines that a condition in 1019 does not permit full compliance with a specific provision in 1016 on a portion of an outdoor recreation access route, the portion of the outdoor recreation access route shall comply with the provision to the extent practicable.

2. At viewing areas, when an entity determines that a condition in 1019 does not permit full compliance on a portion of an outdoor recreation access route with a specific provision in 1016, the portion of the outdoor recreation access route shall comply with the provision to the extent practicable.

3. Where outdoor recreation access routes are provided within vehicular ways, outdoor recreation access routes shall not be required to comply with 1016.4, 1016.7, and 1016.8.

1016.2 Surface. The surface of outdoor recreation access routes, passing spaces, and resting intervals shall be firm and stable.

1016.3 Clear Width. The clear width of outdoor recreation access routes shall be 36 inches (915 mm) minimum.

1016.4 Passing Spaces. Outdoor recreation access routes with a clear width less than 60 inches (1525 mm) shall provide passing spaces complying with 1016.4 at intervals of 200 feet (61 m) maximum. Passing spaces and resting intervals shall be permitted to overlap.

1016.4.1 Size. The passing space shall be either:

1. A space 60 inches (1525 mm) minimum by 60 inches (1525 mm) minimum; or

2. The intersection of two outdoor recreation access routes providing a T-shaped space complying with 304.3.2 where the base and the arms of the T-shaped space extend 48 inches (1220 mm) minimum beyond the intersection. Vertical alignment at the intersection of the outdoor recreation access routes that form the T-shaped space shall be nominally planar.

1016.5 Obstacles. Obstacles on outdoor recreation access routes, passing spaces, and resting intervals shall not exceed ½ inch (13 mm) in height measured vertically to the highest point.

EXCEPTION: Where the surface is other than asphalt, concrete, or boards, obstacles shall be permitted to not exceed 1 inch (25 mm) in height measured vertically to the highest point.

1016.6 Openings. Openings in the surface of outdoor recreation access routes shall not allow the passage of a sphere more than ½ inch (13 mm) in diameter.

1016.7 Slopes. The slopes of outdoor recreation access routes shall comply with 1016.7.

1016.7.1 Maximum Running Slope and Segment Length. The running slope of any segment of an outdoor recreation access route shall not be steeper than 1:10 (10%). Where the running slope of a segment of an outdoor recreation access route is steeper than 1:20 (5%), the maximum length of the segment shall be in accordance with Table 1016.7.1, and a resting interval complying with 1016.8 shall be provided at the top and bottom of each segment.

TABLE 1016.7.1—MAXIMUM RUNNING SLOPE AND SEGMENT LENGTH

Running slope of outdoor recreation access route segment		Maximum length of segment
Steeper than	But not steeper than	
1:20 (5%)	1:12 (8.33%)	50 feet (15 m).
1:12 (8.33%)	1:10 (10%)	30 feet (9 m).

1016.7.2 Cross Slope. The cross slope shall not be steeper than 1:48.

EXCEPTION: Where the surface is other than concrete, asphalt, or boards, cross slopes not steeper than 1:20 shall be permitted when necessary for drainage.

1016.8 Resting Intervals. Resting intervals shall comply with 1016.8.

1016.8.1 Length. The resting interval length shall be 60 inches (1525 mm) long minimum.

1016.8.2 Width. Where resting intervals are provided within an outdoor recreation access route, resting intervals shall be at least as wide as the widest segment of the outdoor recreation access route leading to the resting interval. Where resting intervals are provided adjacent to an outdoor recreation access route, the resting interval shall be 36 inches (915 mm) wide minimum.

1016.8.3 Slope. Resting intervals shall have slopes not steeper than 1:48 in any direction.

EXCEPTION: Where the surface is other than concrete, asphalt, or boards, slopes not steeper than 1:20 shall be permitted when necessary for drainage.

1016.8.4 Turning Space. Where resting intervals are provided adjacent to an outdoor recreation access route, a turning space complying with 304.3.2 shall be provided. Vertical alignment between the outdoor recreation access route, turning space, and resting interval shall be nominally planar.

1016.9 Protruding Objects. Constructed elements on outdoor recreation access routes, passing spaces, and resting intervals shall comply with 307.

1017 TRAILS

1017.1 General. Trails shall comply with 1017.

EXCEPTIONS: 1. When an entity determines that a condition in 1019 does not permit full compliance with a specific provision in 1017 on a portion of a trail, the portion of the trail shall comply with the provision to the extent practicable.

2. After applying Exception 1, when an entity determines that it is impracticable for the entire trail to comply with 1017, the trail shall not be required to comply with 1017.

1017.2 Surface. The surface of trails, passing spaces, and resting intervals shall be firm and stable.

1017.3 Clear Tread Width. The clear tread width of trails shall be 36 inches (915 mm) minimum.

1017.4 Passing Spaces. Trails with a clear tread width less than 60 inches (1525 mm) shall provide passing spaces complying with 1017.4 at intervals of 1000 feet (300 m) maximum. Where the full length of a trail does not fully comply with 1017, a passing space shall be located at the end of the trail segment that fully complies with 1017. Passing spaces and resting intervals shall be permitted to overlap.

1017.4.1 Size. The passing space shall be either:

1. A space 60 inches (1525 mm) minimum by 60 inches (1525 mm) minimum; or

2. The intersection of two trails providing a T-shaped space complying with 304.3.2 where the base and the arms of the T-shaped space extend 48 inches (1220 mm) minimum beyond the intersection. Vertical alignment at the intersection of the trails that form the T-shaped space shall be nominally planar.

1017.5 Tread Obstacles. Tread obstacles on trails, passing spaces, and resting intervals

shall not exceed ½ inch (13 mm) in height measured vertically to the highest point.

EXCEPTION: Where the surface is other than asphalt, concrete, or boards, tread obstacles shall be permitted to not exceed 2 inches (50 mm) in height measured vertically to the highest point.

1017.6 Openings. Openings in the surface of trails, passing spaces, and resting intervals shall not allow the passage of a sphere more than ½ inch (13 mm) in diameter.

1017.7 Slopes. The slopes of trails shall comply with 1017.7.

1017.7.1 Maximum Running Slope and Segment Length. Not more than 30 percent of the total length of a trail shall have a running slope steeper than 1:12 (8.33%). The running slope of any segment of a trail shall not be steeper than 1:8 (12%). Where the running slope of a segment of a trail is steeper than 1:20 (5%), the maximum length of the segment shall be in accordance with Table 1017.7.1, and a resting interval complying with 1017.8 shall be provided at the top and bottom of each segment.

TABLE 1017.7.1—MAXIMUM RUNNING SLOPE AND SEGMENT LENGTH

Running slope of trail segment		Maximum length of segment
Steeper than	But not steeper than	
1:20 (5%)	1:12 (8.33%)	200 feet (61 m).
1:12 (8.33%)	1:10 (10%)	30 feet (9 m).
1:10 (10%)	1:8 (12%)	10 feet (3050 mm).

1017.7.2 Cross Slope. The cross slope shall be not be steeper than 1:48.

EXCEPTION: Where the surface is other than concrete, asphalt, or boards, cross slopes not steeper than 1:20 shall be permitted when necessary for drainage.

1017.8 Resting Intervals. Resting intervals shall comply with 1017.8.

1017.8.1 Length. The resting interval length shall be 60 inches (1525 mm) long minimum.

1017.8.2 Width. Where resting intervals are provided within the trail tread, resting intervals shall be at least as wide as the widest segment of the trail tread leading to the resting interval. Where resting intervals are provided adjacent to the trail tread, the resting interval clear width shall be 36 inches (915 mm) minimum.

1017.8.3 Slope. Resting intervals shall have slopes not steeper than 1:48 in any direction.

EXCEPTION: Where the surface is other than concrete, asphalt, or boards, cross slopes not steeper than 1:20 shall be permitted when necessary for drainage.

1017.8.4 Turning Space. Where resting intervals are provided adjacent to the trail tread, a turning space complying with 304.3.2 shall be provided. Vertical alignment between the trail tread, turning space, and resting interval shall be nominally planar.

1017.9 Protruding Objects. Constructed elements on trails, passing spaces, and resting intervals shall comply with 307.

1017.10 Trailhead Signs. Trail information signs at trailheads shall include the following:

1. Length of the trail or trail segment;
2. Surface type;
3. Typical and minimum tread width;
4. Typical and maximum running slope; and
5. Typical and maximum cross slope.

1018 BEACH ACCESS ROUTES

1018.1 General. Beach access routes shall comply with 1018.

EXCEPTIONS: 1. When an entity determines that a condition in 1019 does not permit full compliance with a specific provision in 1018 on a portion of a beach access route, the portion of the beach access route shall comply with the provision to the extent practicable.

2. After applying Exception 1, when an entity determines that it is impracticable to provide a beach access route complying with 1018, a beach access route shall not be required.

3. Removable beach access routes shall not be required to comply with 1018.7, 1018.8, and 1018.10.

1018.2 Connections. Beach access routes shall connect an entry point to the beach to the:

1. High tide level at tidal beaches;
2. Mean high water level at river beaches; or
3. Normal recreation water level at lake, pond, and reservoir beaches.

1018.3 Surface. The surface of beach access routes and resting intervals shall be firm and stable.

1018.4 Clear Width. The clear width of beach access routes shall be 60 inches (1525 mm) minimum.

EXCEPTION: At dune crossings, the clear width of beach access routes that are not removable shall be permitted to be reduced to 48 inches (1220 mm) minimum.

1018.5 Obstacles. Obstacles on beach access routes and resting intervals shall not exceed ½ inch (13 mm) in height measured vertically to the highest point.

EXCEPTION: Where the surface is other than asphalt, concrete, or boards, obstacles shall be permitted to not exceed 1 inch (25 mm) in height measured vertically to the highest point.

1018.6 Openings. Openings in the surface of beach access routes and resting intervals shall not allow the passage of a sphere more than ½ inch (13 mm) in diameter.

1018.7 Slopes. The slopes of beach access routes shall comply with 1018.7.

1018.7.1 Maximum Running Slope and Segment Length. The running slope of any segment of a beach access route shall not be steeper than 1:10 (10%). Where the running slope of a segment of a beach access route is steeper than 1:20 (5%), the maximum length of the segment shall be in accordance with Table 1018.7.1, and a resting interval complying with 1018.8 shall be provided at the top and bottom of each segment.

TABLE 1018.7.1—MAXIMUM RUNNING SLOPE AND SEGMENT LENGTH

Running slope of beach access route segment		Maximum length of segment
Steeper than	But not steeper than	
1:20 (5%)	1:12 (8.33%)	50 feet (15 m).
1:12 (8.33%)	1:10 (10%)	30 feet (9 m).

1018.7.2 Cross Slope. The cross slope shall not be steeper than 1:48.

EXCEPTION: Where the surface is other than concrete, asphalt, or boards, cross slopes not steeper than 1:20 shall be permitted when necessary for drainage.

1018.8 Resting Intervals. Resting intervals shall comply with 1018.8.

1018.8.1 Size. Resting intervals shall be 60 inches minimum (1525 mm) by 60 inches (1525 mm) minimum.

1018.8.2 Slope. Resting intervals shall have a slope not steeper than 1:48 in any direction.

EXCEPTION: Where the surface is other than concrete, asphalt, or boards, cross slopes not steeper than 1:20 shall be permitted when necessary for drainage.

1018.9 Protruding Objects. Constructed elements on beach access routes and resting intervals shall comply with 307.

1018.10 Dune Crossings. Where the slope of a beach access route at a dune crossing is steeper than 1:20 (5%), handrails complying with 505 and curbs or barriers shall be provided. The curbs or barriers shall prevent the passage of a 2 inch (50 mm) diameter sphere, where any portion of the sphere is within 2 inches (50 mm) of the crossing surface.

1019 CONDITIONS FOR EXCEPTIONS

1019.1 General. Exceptions to specific provisions in 1011, 1013, 1014, 1015, 1016, 1017, and 1018 shall be permitted when an entity determines that any of the following conditions does not permit full compliance with the provision:

1. Compliance is not practicable due to terrain.

2. Compliance cannot be accomplished with the prevailing construction practices.

3. Compliance would fundamentally alter the function or purpose of the facility or the setting.

4. Compliance is limited or precluded by any of the following laws, or by decisions or opinions issued or agreements executed pursuant to any of the following laws:

- Endangered Species Act (16 U.S.C. 1531 et seq.);
- National Environmental Policy Act (42 U.S.C. 4321 et seq.);
- National Historic Preservation Act (16 U.S.C. 470 et seq.);
- Wilderness Act (16 U.S.C. 1131 et seq.); or
- Other federal, state, or local law the purpose of which is to preserve threatened or endangered species; the environment; or archaeological, cultural, historical, or other significant natural features.

Figure 407.4.7.1.3 – Elevator Control Button Identification

Control Button	Tactile Symbol	Braille Message
Emergency Stop		"ST"OP Three cells
Alarm		AL"AR"M Four cells
Door Open		OP"EN" Three cells
Door Close		CLOSE Five cells
Entry Deck		MA"IN" Three cells
Phone		PH"ONE" Four cells

Figure 703.7.2.1 – International Symbol of Accessibility

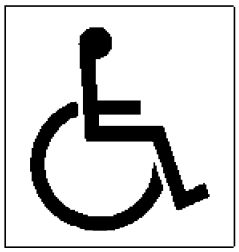

Figure 703.7.2.2 – International Symbol of TTY

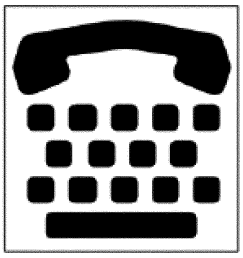

Figure 703.7.2.4 – International Symbol of Access for Hearing Loss

[78 FR 59526, Sept. 26, 2013, as amended at 78 FR 67305, 67306, Nov. 12, 2013; 79 FR 26142, May 7, 2014]

EDITORIAL NOTE: At 79 FR 26142, May 7, 2014, appendix D was amended. However, several actions could not be incorporated due to inaccurate amendatory instruction.

APPENDIX E TO PART 1191 [RESERVED]

APPENDIX F TO PART 1191—MODIFICATIONS ADOPTED BY THE DEPARTMENT OF TRANSPORTATION

The Department of Transportation has adopted by reference Appendices B and D to this part with modifications as the regulatory standards for the construction and alteration of transportation facilities subject to its regulations under the Americans with Disabilities Act, effective November 29, 2006. 49 CFR 37.9 and Appendix A to 49 CFR part 37, as amended at 71 FR 63263, October 30, 2006; and corrected at 72 FR 11089, March 12, 2007. The Department of Transportation has modified section 206.3 in Appendix B to this part; and sections 406, 810.2.2, and 810.5.3 in Appendix D to this part. The modified sections adopted by the Department of Transportation are reprinted in this appendix. Entities that are required to comply with the Department of Transportation's regulatory standards, must comply with modified sections adopted by the Department of Transportation that are reprinted in this appendix. The Department of Transportation has provided supplemental information on the modified sections in Appendix D to 49 CFR part 37.

MODIFICATION TO 206.3 OF APPENDIX B

206.3 Location. Accessible routes shall coincide with, or be located in the same area as general circulation paths. Where circulation paths are interior, required accessible routes shall also be interior. Elements such as ramps, elevators, or other circulation devices, fare vending or other ticketing areas, and fare collection areas shall be placed to minimize the distance which wheelchair users and other persons who cannot negotiate steps may have to travel compared to the general public.

MODIFICATION TO 406 OF APPENDIX D

406.8 Detectable Warnings. A curb ramp shall have a detectable warning complying with 705. The detectable warning shall extend the full width of the curb ramp (exclusive of flared sides) and shall extend either

the full depth of the curb ramp or 24 inches (610 mm) deep minimum measured from the back of the curb on the ramp surface.

MODIFICATION TO 810.2.2 OF APPENDIX D

810.2.2 Dimensions. Bus boarding and alighting areas shall provide a clear length of 96 inches (2440 mm), measured perpendicular to the curb or vehicle roadway edge, and a clear width of 60 inches (1525 mm), measured parallel to the vehicle roadway. Public entities shall ensure that the construction of bus boarding and alighting areas comply with 810.2.2, to the extent the construction specifications are within their control.

MODIFICATION TO 810.5.3 OF APPENDIX D

810.5.3 Platform and Vehicle Floor Coordination. Station platforms shall be positioned to coordinate with vehicles in accordance with the applicable requirements of 36 CFR part 1192. Low-level platforms shall be 8 inches (205 mm) minimum above top of rail. In light rail, commuter rail, and intercity rail systems where it is not operationally or structurally feasible to meet the horizontal gap or vertical difference requirements of part 1192 or 49 CFR part 38, mini-high platforms, carborne or platform-mounted lifts, ramps or bridge plates or similarly manually deployed devices, meeting the requirements of 49 CFR part 38, shall suffice.

EXCEPTION: Where vehicles are boarded from sidewalks or street-level, low-level platforms shall be permitted to be less than 8 inches (205 mm).

[72 FR 13707, Mar. 23, 2007]

PART 1192—AMERICANS WITH DISABILITIES ACT (ADA) ACCESSIBILITY GUIDELINES FOR TRANSPORTATION VEHICLES

Subpart A—General

Sec.
1192.1 Purpose.
1192.2 Equivalent facilitation.
1192.3 Definitions.
1192.4 Miscellaneous instructions.

Subpart B—Buses, Vans and Systems

1192.21 General.
1192.23 Mobility aid accessibility.
1192.25 Doors, steps and thresholds.
1192.27 Priority seating signs.
1192.29 Interior circulation, handrails and stanchions.
1192.31 Lighting.
1192.33 Fare box.
1192.35 Public information system.
1192.37 Stop request.
1192.39 Destination and route signs.

Subpart C—Rapid Rail Vehicles and Systems

1192.51 General.
1192.53 Doorways.
1192.55 Priority seating signs.
1192.57 Interior circulation, handrails and stanchions.
1192.59 Floor surfaces.
1192.61 Public information system.
1192.63 Between-car barriers.

Subpart D—Light Rail Vehicles and Systems

1192.71 General.
1192.73 Doorways.
1192.75 Priority seating signs.
1192.77 Interior circulation, handrails and stanchions.
1192.79 Floors, steps and thresholds.
1192.81 Lighting.
1192.83 Mobility aid accessibility.
1192.85 Between-car barriers.
1192.87 Public information system.

Subpart E—Commuter Rail Cars and Systems

1192.91 General.
1192.93 Doorways.
1192.95 Mobility aid accessibility.
1192.97 Interior circulation, handrails and stanchions.
1192.99 Floors, steps and thresholds.
1192.101 Lighting.
1192.103 Public information system.
1192.105 Priority seating signs.
1192.107 Restrooms.
1192.109 Between-car barriers.

Subpart F—Intercity Rail Cars and Systems

1192.111 General.
1192.113 Doorways.
1192.115 Interior circulation, handrails and stanchions.
1192.117 Floors, steps and thresholds.
1192.119 Lighting.
1192.121 Public information system.
1192.123 Restrooms.
1192.125 Mobility aid accessibility.
1192.127 Sleeping compartments.

Subpart G—Over-the-Road Buses and Systems

1192.151 General.
1192.153 Doors, steps and thresholds.
1192.155 Interior circulation, handrails and stanchions.
1192.157 Lighting.
1192.159 Mobility aid accessibility.
1192.161 Moveable aisle armrests.

Subpart H—Other Vehicles and Systems

1192.171 General.

1192.173 Automated guideway transit vehicles and systems.
1192.175 High-speed rail cars, monorails and systems.
1192.177 Ferries, excursion boats and other vessels. [Reserved]
1192.179 Trams, similar vehicles and systems.
FIGURES TO PART 1192
APPENDIX TO PART 1192—ADVISORY GUIDANCE

AUTHORITY: 42 U.S.C. 12204.

SOURCE: 56 FR 45558, Sept. 6, 1991, unless otherwise noted.

Subpart A—General

§ 1192.1 Purpose.

This part provides minimum guidelines and requirements for accessibility standards to be issued by the Department of Transportation in 49 CFR part 37 for transportation vehicles required to be accessible by the Americans with Disabilities Act (ADA) of 1990 (42 U.S.C. 12101 *et seq*).

§ 1192.2 Equivalent facilitation.

Departures from particular technical and scoping requirements of these guidelines by use of other designs and technologies are permitted where the alternative designs and technologies used will provide substantially equivalent or greater access to and usability of the vehicle. Departures are to be considered on a case-by-case basis by the Department of Transportation under the procedure set forth in 49 CFR 37.7.

§ 1192.3 Definitions.

Accessible means, with respect to vehicles covered by this part, compliance with the provisions of this part.

Automated guideway transit (AGT) system means a fixed-guideway transportation system which operates with automated (driverless) individual vehicles or multi-car trains. Service may be on a fixed schedule or in response to a passenger-activated call button. Such systems using small, slow moving vehicles, often operated in airports and amusement parks, are sometimes called *people movers*.

Bus means any of several types of self-propelled vehicles, other than an over-the-road bus, generally rubber tired, intended for use on city streets, highways, and busways, including but not limited to minibuses, forty- and thirty-foot transit buses, articulated buses, double-deck buses, and electric powered trolley buses, used to provide designated or specified public transportation services. Self-propelled, rubber tire vehicles designed to look like antique or vintage trolleys or streetcars are considered buses.

Common wheelchairs and mobility aids means belonging to a class of three or four wheeled devices, usable indoors, designed for and used by persons with mobility impairments which do not exceed 30 inches in width and 48 inches in length, measured 2 inches above the ground, and do not weigh more than 600 pounds when occupied.

Commuter rail car means a rail passenger car obtained by a commuter authority (as defined by 49 CFR 37.3) for use in commuter rail transportation.

Commuter rail transportation means short-haul rail passenger service operating in metropolitan and suburban areas, operated by a commuter authority, whether within or across the geographical boundaries of a state, usually characterized by reduced fare, multiple ride, and commutation tickets and by morning and evening peak period operations. This term does not include light or rapid rail transportation.

Demand responsive system means any system of transporting individuals, including the provision of designated public transportation service by public entities and the provision of transportation service by private entities, including but not limited to specified public transportation service, which is not a fixed route system.

Designated public transportation means transportation provided by a public entity (other than public school transportation) by bus, rail, or other conveyance (other than transportation by aircraft or intercity or commuter rail transportation) that provides the general public with general or special service, including charter service, on a regular and continuing basis.

Fixed route system means a system of transporting individuals (other than by aircraft), including the provision of designated public transportation service by public entities and the provision

of transportation service by private entities, including but not limited to specified public transportation service, on which a vehicle is operated along a prescribed route according to a fixed schedule.

High speed rail means an intercity-type rail service which operates primarily on a dedicated guideway or track not used, for the most part, by freight, including, but not limited to, trains on welded rail, magnetically levitated (maglev) vehicles on a special guideway, or other advanced technology vehicles, designed to travel at speeds in excess of those possible on other types of railroads.

Intercity rail passenger car means a rail car intended for use by revenue passengers obtained by the National Railroad Passenger Corporation (Amtrak) for use in intercity rail transportation.

Intercity rail transportation means transportation provided by Amtrak.

Light rail means a streetcar-type vehicle railway operated on city streets, semi-private rights-of-way, or exclusive private rights-of-way. Service may be provided by step-entry vehicles or by level-boarding.

New vehicle means a vehicle which is offered for sale or lease after manufacture without any prior use.

Over-the-road bus means a vehicle characterized by an elevated passenger deck located over a baggage compartment.

Rapid rail means a subway-type transit vehicle railway operated on exclusive private rights-of-way with high-level platform stations. Rapid rail may also operate on elevated or at-grade level track separated from other traffic.

Remanufactured vehicle means a vehicle which has been structurally restored and has had new or rebuilt major components installed to extend its service life.

Specified public transportation means transportation by bus, rail, or any other conveyance (other than aircraft) provided by a private entity to the general public, with general or special service (including charter service) on a regular and continuing basis.

Tram means any of several types of motor vehicles consisting of a tractor unit, with or without passenger accommodations, and one or more passenger trailer units, including but not limited to vehicles providing shuttle service to remote parking areas, between hotels and other public accommodations, and between and within amusement parks and other recreation areas.

Used vehicle means a vehicle with prior use.

§ 1192.4 Miscellaneous instructions.

(a) *Dimensional conventions.* Dimensions that are not noted as minimum or maximum are absolute.

(b) *Dimensional tolerances.* All dimensions are subject to conventional engineering tolerances for material properties and field conditions, including normal anticipated wear not exceeding accepted industry-wide standards and practices.

(c) *Notes.* The text of these guidelines does not contain notes or footnotes. Additional information, explanations, and advisory materials are located in the appendix.

(d) *General terminology.* The terms used in this part shall have the following meanings:

(1) *Comply with* means meet one or more specification of these guidelines.

(2) *If* or *if * * * then* denotes a specification that applies only when the conditions described are present.

(3) *May* denotes an option or alternative.

(4) *Shall* denotes a mandatory specification or requirement.

(5) *Should* denotes an advisory specification or recommendation and is used only in the appendix to this part.

Subpart B—Buses, Vans and Systems

§ 1192.21 General.

(a) New, used or remanufactured buses and vans (except over-the-road buses covered by subpart G of this part), to be considered accessible by regulations issued by the Department of Transportation in 49 CFR part 37, shall comply with the applicable provisions of this subpart.

(b) If portions of the vehicle are modified in a way that affects or could affect accessibility, each such portion shall comply, to the extent practicable,

with the applicable provisions of this subpart. This provision does not require that inaccessible buses be retrofitted with lifts, ramps or other boarding devices.

§ 1192.23 Mobility aid accessibility.

(a) *General*. All vehicles covered by this subpart shall provide a level-change mechanism or boarding device (e.g., lift or ramp) complying with paragraph (b) or (c) of this section and sufficient clearances to permit a wheelchair or other mobility aid user to reach a securement location. At least two securement locations and devices, complying with paragraph (d) of this section, shall be provided on vehicles in excess of 22 feet in length; at least one securement location and device, complying with paragraph (d) of this section, shall be provided on vehicles 22 feet in length or less.

(b) *Vehicle lift*—(1) *Design load*. The design load of the lift shall be at least 600 pounds. Working parts, such as cables, pulleys, and shafts, which can be expected to wear, and upon which the lift depends for support of the load, shall have a safety factor of at least six, based on the ultimate strength of the material. Nonworking parts, such as platform, frame, and attachment hardware which would not be expected to wear, shall have a safety factor of at least three, based on the ultimate strength of the material.

(2) *Controls*—(i) *Requirements*. The controls shall be interlocked with the vehicle brakes, transmission, or door, or shall provide other appropriate mechanisms or systems, to ensure that the vehicle cannot be moved when the lift is not stowed and so the lift cannot be deployed unless the interlocks or systems are engaged. The lift shall deploy to all levels (i.e., ground, curb, and intermediate positions) normally encountered in the operating environment. Where provided, each control for deploying, lowering, raising, and stowing the lift and lowering the roll-off barrier shall be of a momentary contact type requiring continuous manual pressure by the operator and shall not allow improper lift sequencing when the lift platform is occupied. The controls shall allow reversal of the lift operation sequence, such as raising or lowering a platform that is part way down, without allowing an occupied platform to fold or retract into the stowed position.

(ii) *Exception*. Where the lift is designed to deploy with its long dimension parallel to the vehicle axis and which pivots into or out of the vehicle while occupied (i.e., *rotary lift*), the requirements of this paragraph prohibiting the lift from being stowed while occupied shall not apply if the stowed position is within the passenger compartment and the lift is intended to be stowed while occupied.

(3) *Emergency operation*. The lift shall incorporate an emergency method of deploying, lowering to ground level with a lift occupant, and raising and stowing the empty lift if the power to the lift fails. No emergency method, manual or otherwise, shall be capable of being operated in a manner that could be hazardous to the lift occupant or to the operator when operated according to manufacturer's instructions, and shall not permit the platform to be stowed or folded when occupied, unless the lift is a rotary lift and is intended to be stowed while occupied.

(4) *Power or equipment failure*. Platforms stowed in a vertical position, and deployed platforms when occupied, shall have provisions to prevent their deploying, falling, or folding any faster than 12 inches/second or their dropping of an occupant in the event of a single failure of any load carrying component.

(5) *Platform barriers*. The lift platform shall be equipped with barriers to prevent any of the wheels of a wheelchair or mobility aid from rolling off the platform during its operation. A movable barrier or inherent design feature shall prevent a wheelchair or mobility aid from rolling off the edge closest to the vehicle until the platform is in its fully raised position. Each side of the lift platform which extends beyond the vehicle in its raised position shall have a barrier a minimum 1½ inches high. Such barriers shall not interfere with maneuvering into or out of the aisle. The loading-edge barrier (outer barrier) which functions as a loading ramp when the lift is at ground level, shall be sufficient when raised or closed, or a

supplementary system shall be provided, to prevent a power wheelchair or mobility aid from riding over or defeating it. The outer barrier of the lift shall automatically raise or close, or a supplementary system shall automatically engage, and remain raised, closed, or engaged at all times that the platform is more than 3 inches above the roadway or sidewalk and the platform is occupied. Alternatively, a barrier or system may be raised, lowered, opened, closed, engaged, or disengaged by the lift operator, provided an interlock or inherent design feature prevents the lift from rising unless the barrier is raised or closed or the supplementary system is engaged.

(6) *Platform surface*. The platform surface shall be free of any protrusions over ¼ inch high and shall be slip resistant. The platform shall have a minimum clear width of 28½ inches at the platform, a minimum clear width of 30 inches measured from 2 inches above the platform surface to 30 inches above the platform, and a minimum clear length of 48 inches measured from 2 inches above the surface of the platform to 30 inches above the surface of the platform. (See Fig. 1)

(7) *Platform gaps*. Any openings between the platform surface and the raised barriers shall not exceed ⅝ inch in width. When the platform is at vehicle floor height with the inner barrier (if applicable) down or retracted, gaps between the forward lift platform edge and the vehicle floor shall not exceed ½ inch horizontally and ⅝ inch vertically. Platforms on semi-automatic lifts may have a hand hold not exceeding 1½ inches by 4½ inches located between the edge barriers.

(8) *Platform entrance ramp*. The entrance ramp, or loading-edge barrier used as a ramp, shall not exceed a slope of 1:8, measured on level ground, for a maximum rise of 3 inches, and the transition from roadway or sidewalk to ramp may be vertical without edge treatment up to ¼ inch. Thresholds between ¼ inch and ½ inch high shall be beveled with a slope no greater than 1:2.

(9) *Platform deflection*. The lift platform (not including the entrance ramp) shall not deflect more than 3 degrees (exclusive of vehicle roll or pitch) in any direction between its unloaded position and its position when loaded with 600 pounds applied through a 26 inch by 26 inch test pallet at the centroid of the platform.

(10) *Platform movement*. No part of the platform shall move at a rate exceeding 6 inches/second during lowering and lifting an occupant, and shall not exceed 12 inches/second during deploying or stowing. This requirement does not apply to the deployment or stowage cycles of lifts that are manually deployed or stowed. The maximum platform horizontal and vertical acceleration when occupied shall be 0.3g.

(11) *Boarding direction*. The lift shall permit both inboard and outboard facing of wheelchair and mobility aid users.

(12) *Use by standees*. Lifts shall accommodate persons using walkers, crutches, canes or braces or who otherwise have difficulty using steps. The platform may be marked to indicate a preferred standing position.

(13) *Handrails*. Platforms on lifts shall be equipped with handrails on two sides, which move in tandem with the lift, and which shall be graspable and provide support to standees throughout the entire lift operation. Handrails shall have a usable component at least 8 inches long with the lowest portion a minimum 30 inches above the platform and the highest portion a maximum 80 inches above the platform. The handrails shall be capable of withstanding a force of 100 pounds concentrated at any point on the handrail without permanent deformation of the rail or its supporting structure. The handrail shall have a cross-sectional diameter between 1¼ inches and 1½ inches or shall provide an equivalent grasping surface, and have eased edges with corner radii of not less than ⅛ inch. Handrails shall be placed to provide a minimum 1½ inches knuckle clearance from the nearest adjacent surface. Handrails shall not interfere with wheelchair or mobility aid maneuverability when entering or leaving the vehicle.

(c) *Vehicle ramp*—(1) *Design load*. Ramps 30 inches or longer shall support a load of 600 pounds, placed at the centroid of the ramp distributed over an area of 26 inches by 26 inches, with a safety factor of at least 3 based on the

ultimate strength of the material. Ramps shorter than 30 inches shall support a load of 300 pounds.

(2) *Ramp surface*. The ramp surface shall be continuous and slip resistant; shall not have protrusions from the surface greater than ¼ inch high; shall have a clear width of 30 inches; and shall accommodate both four-wheel and three-wheel mobility aids.

(3) *Ramp threshold*. The transition from roadway or sidewalk and the transition from vehicle floor to the ramp may be vertical without edge treatment up to ¼ inch. Changes in level between ¼ inch and ½ inch shall be beveled with a slope no greater than 1:2.

(4) *Ramp barriers*. Each side of the ramp shall have barriers at least 2 inches high to prevent mobility aid wheels from slipping off.

(5) *Slope*. Ramps shall have the least slope practicable and shall not exceed 1:4 when deployed to ground level. If the height of the vehicle floor from which the ramp is deployed is 3 inches or less above a 6-inch curb, a maximum slope of 1:4 is permitted; if the height of the vehicle floor from which the ramp is deployed is 6 inches or less, but greater than 3 inches, above a 6-inch curb, a maximum slope of 1:6 is permitted; if the height of the vehicle floor from which the ramp is deployed is 9 inches or less, but greater than 6 inches, above a 6-inch curb, a maximum slope of 1:8 is permitted; if the height of the vehicle floor from which the ramp is deployed is greater than 9 inches above a 6-inch curb, a slope of 1:12 shall be achieved. Folding or telescoping ramps are permitted provided they meet all structural requirements of this section.

(6) *Attachment*. When in use for boarding or alighting, the ramp shall be firmly attached to the vehicle so that it is not subject to displacement when loading or unloading a heavy power mobility aid and that no gap between vehicle and ramp exceeds ⅝ inch.

(7) *Stowage*. A compartment, securement system, or other appropriate method shall be provided to ensure that stowed ramps, including portable ramps stowed in the passenger area, do not impinge on a passenger's wheelchair or mobility aid or pose any hazard to passengers in the event of a sudden stop or maneuver.

(8) *Handrails*. If provided, handrails shall allow persons with disabilities to grasp them from outside the vehicle while starting to board, and to continue to use them throughout the boarding process, and shall have the top between 30 inches and 38 inches above the ramp surface. The handrails shall be capable of withstanding a force of 100 pounds concentrated at any point on the handrail without permanent deformation of the rail or its supporting structure. The handrail shall have a cross-sectional diameter between 1¼ inches and 1½ inches or shall provide an equivalent grasping surface, and have eased edges with corner radii of not less than ⅛ inch. Handrails shall not interfere with wheelchair or mobility aid maneuverability when entering or leaving the vehicle.

(d) *Securement devices*—(1) *Design load*. Securement systems on vehicles with GVWRs of 30,000 pounds or above, and their attachments to such vehicles, shall restrain a force in the forward longitudinal direction of up to 2,000 pounds per securement leg or clamping mechanism and a minimum of 4,000 pounds for each mobility aid. Securement systems on vehicles with GVWRs of up to 30,000 pounds, and their attachments to such vehicles, shall restrain a force in the forward longitudinal direction of up to 2,500 pounds per securement leg or clamping mechanism and a minimum of 5,000 pounds for each mobility aid.

(2) *Location and size*. The securernent system shall be placed as near to the accessible entrance as practicable and shall have a clear floor area of 30 inches by 48 inches. Such space shall adjoin, and may overlap, an access path. Not more than 6 inches of the required clear floor space may be accommodated for footrests under another seat provided there is a minimum of 9 inches from the floor to the lowest part of the seat overhanging the space. Securement areas may have fold-down seats to accommodate other passengers when a wheelchair or mobility aid is not occupying the area, provided the seats, when folded up, do not obstruct the clear floor space required. (See Fig. 2)

(3) *Mobility aids accommodated.* The securement system shall secure common wheelchairs and mobility aids and shall either be automatic or easily attached by a person familiar with the system and mobility aid and having average dexterity.

(4) *Orientation.* In vehicles in excess of 22 feet in length, at least one securement device or system required by paragraph (a) of this section shall secure the wheelchair or mobility aid facing toward the front of the vehicle. In vehicles 22 feet in length or less, the required securement device may secure the wheelchair or mobility aid either facing toward the front of the vehicle or rearward. Additional securement devices or systems shall secure the wheelchair or mobility aid facing forward or rearward. Where the wheelchair or mobility aid is secured facing the rear of the vehicle, a padded barrier shall be provided. The padded barrier shall extend from a height of 38 inches from the vehicle floor to a height of 56 inches from the vehicle floor with a width of 18 inches, laterally centered immediately in back of the seated individual. Such barriers need not be solid provided equivalent protection is afforded.

(5) *Movement.* When the wheelchair or mobility aid is secured in accordance with manufacturer's instructions, the securement system shall limit the movement of an occupied wheelchair or mobility aid to no more than 2 inches in any direction under normal vehicle operating conditions.

(6) *Stowage.* When not being used for securement, or when the securement area can be used by standees, the securement system shall not interfere with passenger movement, shall not present any hazardous condition, shall be reasonably protected from vandalism, and shall be readily accessed when needed for use.

(7) *Seat belt and shoulder harness.* For each wheelchair or mobility aid securement device provided, a passenger seat belt and shoulder harness, complying with all applicable provisions of 49 CFR part 571, shall also be provided for use by wheelchair or mobility aid users. Such seat belts and shoulder harnesses shall not be used in lieu of a device which secures the wheelchair or mobility aid itself.

§ 1192.25 Doors, steps and thresholds.

(a) *Slip resistance.* All aisles, steps, floor areas where people walk and floors in securement locations shall have slip-resistant surfaces.

(b) *Contrast.* All step edges, thresholds, and the boarding edge of ramps or lift platforms shall have a band of color(s) running the full width of the step or edge which contrasts from the step tread and riser, or lift or ramp surface, either light-on-dark or dark-on-light.

(c) *Door height.* For vehicles in excess of 22 feet in length, the overhead clearance between the top of the door opening and the raised lift platform, or highest point of a ramp, shall be a minimum of 68 inches. For vehicles of 22 feet in length or less, the overhead clearance between the top of the door opening and the raised lift platform, or highest point of a ramp, shall be a minimum of 56 inches.

§ 1192.27 Priority seating signs.

(a) Each vehicle shall contain sign(s) which indicate that seats in the front of the vehicle are priority seats for persons with disabilities, and that other passengers should make such seats available to those who wish to use them. At least one set of forward-facing seats shall be so designated.

(b) Each securement location shall have a sign designating it as such.

(c) Characters on signs required by paragraphs (a) and (b) of this section shall have a width-to-height ratio between 3:5 and 1:1 and a stroke width-to-height ratio between 1:5 and 1:10, with a minimum character height (using an upper case ''X'') of ⅝ inch, with ''wide'' spacing (generally, the space between letters shall be 1/16 the height of upper case letters), and shall contrast with the background either light-on-dark or dark-on-light.

§ 1192.29 Interior circulation, handrails and stanchions.

(a) Interior handrails and stanchions shall permit sufficient turning and maneuvering space for wheelchairs and other mobility aids to reach a securement location from the lift or ramp.

(b) Handrails and stanchions shall be provided in the entrance to the vehicle in a configuration which allows persons with disabilities to grasp such assists from outside the vehicle while starting to board, and to continue using such assists throughout the boarding and fare collection process. Handrails shall have a cross-sectional diameter between 1¼ inches and 1½ inches or shall provide an equivalent grasping surface, and have eased edges with corner radii of not less than ⅛ inch. Handrails shall be placed to provide a minimum 1½ inches knuckle clearance from the nearest adjacent surface. Where onboard fare collection devices are used on vehicles in excess of 22 feet in length, a horizontal passenger assist shall be located across the front of the vehicle and shall prevent passengers from sustaining injuries on the fare collection device or windshield in the event of a sudden deceleration. Without restricting the vestibule space, the assist shall provide support for a boarding passenger from the front door through the boarding procedure. Passengers shall be able to lean against the assist for security while paying fares.

(c) For vehicles in excess of 22 feet in length, overhead handrail(s) shall be provided which shall be continuous except for a gap at the rear doorway.

(d) Handrails and stanchions shall be sufficient to permit safe boarding, onboard circulation, seating and standing assistance, and alighting by persons with disabilities.

(e) For vehicles in excess of 22 feet in length with front-door lifts or ramps, vertical stanchions immediately behind the driver shall either terminate at the lower edge of the aisle-facing seats, if applicable, or be ''dog-legged'' so that the floor attachment does not impede or interfere with wheelchair footrests. If the driver seat platform must be passed by a wheelchair or mobility aid user entering the vehicle, the platform, to the maximum extent practicable, shall not extend into the aisle or vestibule beyond the wheel housing.

(f) For vehicles in excess of 22 feet in length, the minimum interior height along the path from the lift to the securement location shall be 68 inches. For vehicles of 22 feet in length or less, the minimum interior height from lift to securement location shall be 56 inches.

§ 1192.31 Lighting.

(a) Any stepwell or doorway immediately adjacent to the driver shall have, when the door is open, at least 2 foot-candles of illumination measured on the step tread or lift platform.

(b) Other stepwells and doorways, including doorways in which lifts or ramps are installed, shall have, at all times, at least 2 foot-candles of illumination measured on the step tread, or lift or ramp, when deployed at the vehicle floor level.

(c) The vehicle doorways, including doorways in which lifts or ramps are installed, shall have outside light(s) which, when the door is open, provide at least 1 foot-candle of illumination on the street surface for a distance 3 feet (915 mm) perpendicular to the bottom step tread or lift outer edge. Such light(s) shall be shielded to protect the eyes of entering and exiting passengers.

[56 FR 45558, Sept. 6, 1991, as amended at 63 FR 51697, 51702, Sept. 28, 1998]

§ 1192.33 Fare box.

Where provided, the farebox shall be located as far forward as practicable and shall not obstruct traffic in the vestibule, especially wheelchairs or mobility aids.

§ 1192.35 Public information system.

(a) Vehicles in excess of 22 feet in length, used in multiple-stop, fixed-route service, shall be equipped with a public address system permitting the driver, or recorded or digitized human speech messages, to announce stops and provide other passenger information within the vehicle.

(b) [Reserved]

§ 1192.37 Stop request.

(a) Where passengers may board or alight at multiple stops at their option, vehicles in excess of 22 feet in length shall provide controls adjacent to the securement location for requesting stops and which alerts the driver that a mobility aid user wishes to disembark. Such a system shall provide

auditory and visual indications that the request has been made.

(b) Controls required by paragraph (a) of this section shall be mounted no higher than 48 inches and no lower than 15 inches above the floor, shall be operable with one hand and shall not require tight grasping, pinching, or twisting of the wrist. The force required to activate controls shall be no greater than 5 lbf (22.2 N).

§ 1192.39 Destination and route signs.

(a) Where destination or route information is displayed on the exterior of a vehicle, each vehicle shall have illuminated signs on the front and boarding side of the vehicle.

(b) Characters on signs required by paragraph (a) of this section shall have a width-to-height ratio between 3:5 and 1:1 and a stroke width-to-height ratio between 1:5 and 1:10, with a minimum character height (using an upper case ''X'') of 1 inch for signs on the boarding side and a minimum character height of 2 inches for front ''headsigns'', with ''wide'' spacing (generally, the space between letters shall be 1/16 the height of upper case letters), and shall contrast with the background, either dark-on-light or light-on-dark.

Subpart C—Rapid Rail Vehicles and Systems

§ 1192.51 General.

(a) New, used and remanufactured rapid rail vehicles, to be considered accessible by regulations issued by the Department of Transportation in 49 CFR part 37, shall comply with this subpart.

(b) If portions of the vehicle are modified in a way that affects or could affect accessibility, each such portion shall comply, to the extent practicable, with the applicable provisions of this subpart. This provision does not require that inaccessible vehicles be retrofitted with lifts, ramps or other boarding devices.

(c) Existing vehicles which are retrofitted to comply with the ''one-car-per-train rule'' of 49 CFR 37.93 shall comply with §§ 1192.55, 1192.57(b), 1192.59 and shall have, in new and key stations, at least one door complying with § 1192.53(a)(1), (b) and (d). Removal of seats is not required. Vehicles previously designed and manufactured in accordance with the accessibility requirements of 49 CFR part 609 or Department of Transportation regulations implementing section 504 of the Rehabilitation Act of 1973 that were in effect before October 7, 1991, and which can be entered and used from stations in which they are to be operated, may be used to satisfy the requirements of 49 CFR 37.93.

§ 1192.53 Doorways.

(a) *Clear width.* (1) Passenger doorways on vehicle sides shall have clear openings at least 32 inches wide when open.

(2) If doorways connecting adjoining cars in a multi-car train are provided, and if such doorway is connected by an aisle with a minimum clear width of 30 inches to one or more spaces where wheelchair or mobility aid users can be accommodated, then such doorway shall have a minimum clear opening of 30 inches to permit wheelchair and mobility aid users to be evacuated to an adjoining vehicle in an emergency.

(b) *Signage.* The International Symbol of Accessibility shall be displayed on the exterior of accessible vehicles operating on an accessible and rapid rail system unless all vehicles area accessible and are not marked by the access symbol. (See Fig. 6)

(c) *Signals.* Auditory and visual warning signals shall be provided to alert passengers of closing doors.

(d) *Coordination with boarding platform*—(1) *Requirements.* Where new vehicles will operate in new stations, the design of vehicles shall be coordinated with the boarding platform design such that the horizontal gap between each vehicle door at rest and the platform shall be no greater than 3 inches and the height of the vehicle floor shall be within plus or minus 5/8 inch of the platform height under all normal passenger load conditions. Vertical alignment may be accomplished by vehicle air suspension or other suitable means of meeting the requirement.

(2) *Exception.* New vehicles operating in existing stations may have a floor height within plus or minus 1½ inches of the platform height. At key stations, the horizontal gap between at

least one door of each such vehicle and the platform shall be no greater than 3 inches.

(3) *Exception.* Retrofitted vehicles shall be coordinated with the platform in new and key stations such that the horizontal gap shall be no greater than 4 inches and the height of the vehicle floor, under 50% passenger load, shall be within plus or minus 2 inches of the platform height.

§ 1192.55 Priority seating signs.

(a) Each vehicle shall contain sign(s) which indicate that certain seats are priority seats for persons with disabilities, and that other passengers should make such seats available to those who wish to use them.

(b) Characters on signs required by paragraph (a) of this section shall have a width-to-height ratio between 3:5 and 1:1 and a stroke width-to-height ratio between 1:5 and 1:10, with a minimum character height (using an upper case ''X'') of ⅝ inch, with ''Wide'' spacing (generally, the space between letters shall be 1/16 the height of upper case letters), and shall contrast with the background, either light-on-dark or dark-on-light.

§ 1192.57 Interior circulation, handrails and stanchions.

(a) Handrails and stanchions shall be provided to assist safe boarding, on-board circulation, seating and standing assistance, and alighting by persons with disabilities.

(b) Handrails, stanchions, and seats shall allow a route at least 32 inches wide so that at least two wheelchair or mobility aid users can enter the vehicle and position the wheelchairs or mobility aids in areas, each having a minimum clear space of 48 inches by 30 inches, which do not unduly restrict movement of other passengers. Space to accommodate wheelchairs and mobility aids may be provided within the normal area used by standees and designation of specific spaces is not required. Particular attention shall be given to ensuring maximum maneuverability immediately inside doors. Ample vertical stanchions from ceiling to seat-back rails shall be provided. Vertical stanchions from ceiling to floor shall not interfere with wheelchair or mobility aid user circulation and shall be kept to a minimum in the vicinity of doors.

(c) The diameter or width of the gripping surface of handrails and stanchions shall be 1¼ inches to 1½ inches or provide an equivalent gripping surface and shall provide a minimum 1½ inches knuckle clearance from the nearest adjacent surface.

§ 1192.59 Floor surfaces.

Floor surfaces on aisles, places for standees, and areas where wheelchair and mobility aid users are to be accommodated shall be slip-resistant.

§ 1192.61 Public information system.

(a)(1) *Requirements.* Each vehicle shall be equipped with a public address system permitting transportation system personnel, or recorded or digitized human speech messages, to announce stations and provide other passenger information. Alternative systems or devices which provide equivalent access are also permitted. Each vehicle operating in stations having more than one line or route shall have an external public address system to permit transportation system personnel, or recorded or digitized human speech messages, to announce train, route, or line identification information.

(2) *Exception.* Where station announcement systems provide information on arriving trains, an external train speaker is not required.

(b) [Reserved]

§ 1192.63 Between-car barriers.

(a) *Requirement.* Suitable devices or systems shall be provided to prevent, deter or warn individuals from inadvertently stepping off the platform between cars. Acceptable solutions include, but are not limited to, pantograph gates, chains, motion detectors or similar devices.

(b) *Exception.* Between-car barriers are not required where platform screens are provided which close off the platform edge and open only when trains are correctly aligned with the doors.

Subpart D—Light Rail Vehicles and Systems

§ 1192.71 General.

(a) New, used and remanufactured light rail vehicles, to be considered accessible by regulations issued by the Department of Transportation in 49 CFR part 37, shall comply with this subpart.

(b)(1) Vehicles intended to be operated solely in light rail systems confined entirely to a dedicated right-of-way, and for which all stations or stops are designed and constructed for revenue service after the effective date of standards for design and construction issued pursuant to subpart C of 49 CFR part 37, shall provide level boarding and shall comply with §§ 1192.73(d)(1) and 1192.85.

(2) Vehicles designed for, and operated on, pedestrian malls, city streets, or other areas where level boarding is not practicable shall provide wayside or car-borne lifts, mini-high platforms, or other means of access in compliance with § 1192.83 (b) or (c).

(c) If portions of the vehicle are modified in a way that affects or could affect accessibility, each such portion shall comply, to the extent practicable, with the applicable provisions of this subpart. This provision does not require that inaccessible vehicles be retrofitted with lifts, ramps or other boarding devices.

(d) Existing vehicles retrofitted to comply with the ''one-car-per-train rule'' at 49 CFR 37.93 shall comply with §§ 1192.75, 1192.77(c), 1192.79(a) and 1192.83(a) and shall have, in new and key stations, at least one door which complies with § 1192.73 (a)(1), (b) and (d). Vehicles previously designed and manufactured in accordance with the accessibility requirements of 49 CFR part 609 or Department of Transportation regulations implementing section 504 of the Rehabilitation Act of 1973 that were in effect before October 7, 1991, and which can be entered and used from stations in which they are to be operated, may be used to satisfy the requirements of 49 CFR 37.93.

§ 1192.73 Doorways.

(a) *Clear width.* (1) All passenger doorways on vehicle sides shall have minimum clear openings of 32 inches when open.

(2) If doorways connecting adjoining cars in a multi-car train are provided, and if such doorway is connected by an aisle with a minimum clear width of 30 inches to one or more spaces where wheelchair or mobility aid users can be accommodated, then such doorway shall have a minimum clear opening of 30 inches to permit wheelchair and mobility aid users to be evacuated to an adjoining vehicle in an emergency.

(b) *Signage.* The International Symbol of Accessibility shall be displayed on the exterior of each vehicle operating on an accessible light rail system unless all vehicles are accessible and are not marked by the access symbol (See Fig. 6).

(c) *Signals.* Auditory and visual warning signals shall be provided to alert passengers of closing doors.

(d) *Coordination with boarding platform*—(1) *Requirements.* The design of level-entry vehicles shall be coordinated with the boarding platform or mini-high platform design so that the horizontal gap between a vehicle at rest and the platform shall be no greater than 3 inches and the height of the vehicle floor shall be within plus or minus ⅝ inch of the platform height. Vertical alignment may be accomplished by vehicle air suspension, automatic ramps or lifts, or any combination.

(2) *Exception.* New vehicles operating in existing stations may have a floor height within plus or minus 1½ inches of the platform height. At key stations, the horizontal gap between at least one door of each such vehicle and the platform shall be no greater than 3 inches.

(3) *Exception.* Retrofitted vehicles shall be coordinated with the platform in new and key stations such that the horizontal gap shall be no greater than 4 inches and the height of the vehicle floor, under 50% passenger load, shall be within plus or minus 2 inches of the platform height.

(4) *Exception.* Where it is not operationally or structurally practicable to meet the horizontal or vertical requirements of paragraphs (d) (1), (2) or (3) of this section, platform or vehicle devices complying with § 1192.83(b) or

platform or vehicle mounted ramps or bridge plates complying with § 1192.83(c) shall be provided.

§ 1192.75 Priority seating signs.

(a) Each vehicle shall contain sign(s) which indicate that certain seats are priority seats for persons with disabilities, and that other passengers should make such seats available to those who wish to use them.

(b) Where designated wheelchair or mobility aid seating locations are provided, signs shall indicate the location and advise other passengers of the need to permit wheelchair and mobility aid users to occupy them.

(c) Characters on signs required by paragraph (a) or (b) of this section shall have a width-to-height ratio between 3:5 and 1:1 and a stroke width-to-height ratio between 1:5 and 1:10, with a minimum character height (using an upper case ''X'') of ⅝ inch, with ''wide'' spacing (generally, the space between letters shall be 1/16 the height of upper case letters), and shall contrast with the background, either light-on-dark or dark-on-light.

§ 1192.77 Interior circulation, handrails and stanchions.

(a) Handrails and stanchions shall be sufficient to permit safe boarding, on-board circulation, seating and standing assistance, and alighting by persons with disabilities.

(b) At entrances equipped with steps, handrails and stanchions shall be provided in the entrance to the vehicle in a configuration which allows passengers to grasp such assists from outside the vehicle while starting to board, and to continue using such handrails or stanchions throughout the boarding process. Handrails shall have a cross-sectional diameter between 1¼ inches and 1½ inches or shall provide an equivalent grasping surface, and have eased edges with corner radii of not less than ⅛ inch. Handrails shall be placed to provide a minimum 1½ inches knuckle clearance from the nearest adjacent surface. Where on-board fare collection devices are used, a horizontal passenger assist shall be located between boarding passengers and the fare collection device and shall prevent passengers from sustaining injuries on the fare collection device or windshield in the event of a sudden deceleration. Without restricting the vestibule space, the assist shall provide support for a boarding passenger from the door through the boarding procedure. Passengers shall be able to lean against the assist for security while paying fares.

(c) At all doors on level-entry vehicles, and at each entrance accessible by lift, ramp, bridge plate or other suitable means, handrails, stanchions, passenger seats, vehicle driver seat platforms, and fare boxes, if applicable, shall be located so as to allow a route at least 32 inches wide so that at least two wheelchair or mobility aid users can enter the vehicle and position the wheelchairs or mobility aids in areas, each having a minimum clear space of 48 inches by 30 inches, which do not unduly restrict movement of other passengers. Space to accommodate wheelchairs and mobility aids may be provided within the normal area used by standees and designation of specific spaces is not required. Particular attention shall be given to ensuring maximum maneuverability immediately inside doors. Ample vertical stanchions from ceiling to seat-back rails shall be provided. Vertical stanchions from ceiling to floor shall not interfere with wheelchair or mobility aid circulation and shall be kept to a minimum in the vicinity of accessible doors.

§ 1192.79 Floors, steps and thresholds.

(a) Floor surfaces on aisles, step treads, places for standees, and areas where wheelchair and mobility aid users are to be accommodated shall be slip-resistant.

(b) All thresholds and step edges shall have a band of color(s) running the full width of the step or threshold which contrasts from the step tread and riser or adjacent floor, either light-on-dark or dark-on-light.

§ 1192.81 Lighting.

(a) Any stepwell or doorway with a lift, ramp or bridge plate immediately adjacent to the driver shall have, when the door is open, at least 2 footcandles of illumination measured on the step tread or lift platform.

(b) Other stepwells, and doorways with lifts, ramps or bridge plates, shall have, at all times, at least 2 footcandles of illumination measured on the step tread or lift or ramp, when deployed at the vehicle floor level.

(c) The doorways of vehicles not operating at lighted station platforms shall have outside lights which provide at least 1 footcandle of illumination on the station platform or street surface for a distance of 3 feet perpendicular to all points on the bottom step tread. Such lights shall be located below window level and shielded to protect the eyes of entering and exiting passengers.

§ 1192.83 Mobility aid accessibility.

(a)(1) *General.* All new light rail vehicles, other than level entry vehicles, covered by this subpart shall provide a level-change mechanism or boarding device (e.g., lift, ramp or bridge plate) complying with either paragraph (b) or (c) of this section and sufficient clearances to permit at least two wheelchair or mobility aid users to reach areas, each with a minimum clear floor space of 48 inches by 30 inches, which do not unduly restrict passenger flow. Space to accommodate wheelchairs and mobility aids may be provided within the normal area used by standees and designation of specific spaces is not required.

(2) *Exception.* If lifts, ramps or bridge plates meeting the requirements of this section are provided on station platforms or other stops, or mini-high platforms complying with § 1192.73(d) are provided, at stations or stops required to be accessible by 49 CFR part 37, the vehicle is not required to be equipped with a car-borne device. Where each new vehicle is compatible with a single platform-mounted access system or device, additional systems or devices are not required for each vehicle provided that the single device could be used to provide access to each new vehicle if passengers using wheelchairs or mobility aids could not be accommodated on a single vehicle.

(b) *Vehicle lift*—(1) *Design load.* The design load of the lift shall be at least 600 pounds. Working parts, such as cables, pulleys, and shafts, which can be expected to wear, and upon which the lift depends for support of the load, shall have a safety factor of at least six, based on the ultimate strength of the material. Nonworking parts, such as platform, frame, and attachment hardware which would not be expected to wear, shall have a safety factor of at least three, based on the ultimate strength of the material.

(2) *Controls*—(i) *Requirements.* The controls shall be interlocked with the vehicle brakes, propulsion system, or door, or shall provide other appropriate mechanisms or systems, to ensure that the vehicle cannot be moved when the lift is not stowed and so the lift cannot be deployed unless the interlocks or systems are engaged. The lift shall deploy to all levels (i.e., ground, curb, and intermediate positions) normally encountered in the operating environment. Where provided, each control for deploying, lowering, raising, and stowing the lift and lowering the roll-off barrier shall be of a momentary contact type requiring continuous manual pressure by the operator and shall not allow improper lift sequencing when the lift platform is occupied. The controls shall allow reversal of the lift operation sequence, such as raising or lowering a platform that is part way down, without allowing an occupied platform to fold or retract into the stowed position.

(ii) *Exception.* Where physical or safety constraints prevent the deployment at some stops of a lift having its long dimension perpendicular to the vehicle axis, the transportation entity may specify a lift which is designed to deploy with its long dimension parallel to the vehicle axis and which pivots into or out of the vehicle while occupied (i.e., ''rotary lift''). The requirements of paragraph (b)(2)(i) of this section prohibiting the lift from being stowed while occupied shall not apply to a lift design of this type if the stowed position is within the passenger compartment and the lift is intended to be stowed while occupied.

(iii) *Exception.* The brake or propulsion system interlocks requirement does not apply to a station platform mounted lift provided that a mechanical, electrical or other system operates to ensure that vehicles do not move when the lift is in use.

(3) *Emergency operation*. The lift shall incorporate an emergency method of deploying, lowering to ground level with a lift occupant, and raising and stowing the empty lift if the power to the lift fails. No emergency method, manual or otherwise, shall be capable of being operated in a manner that could be hazardous to the lift occupant or to the operator when operated according to manufacturer's instructions, and shall not permit the platform to be stowed or folded when occupied, unless the lift is a rotary lift intended to be stowed while occupied.

(4) *Power or equipment failure*. Lift platforms stowed in a vertical position, and deployed platforms when occupied, shall have provisions to prevent their deploying, falling, or folding any faster than 12 inches/second or their dropping of an occupant in the event of a single failure of any load carrying component.

(5) *Platform barriers*. The lift platform shall be equipped with barriers to prevent any of the wheels of a wheelchair or mobility aid from rolling off the lift during its operation. A movable barrier or inherent design feature shall prevent a wheelchair or mobility aid from rolling off the edge closest to the vehicle until the lift is in its fully raised position. Each side of the lift platform which extends beyond the vehicle in its raised position shall have a barrier a minimum 1½ inches high. Such barriers shall not interfere with maneuvering into or out of the aisle. The loading-edge barrier (outer barrier) which functions as a loading ramp when the lift is at ground level, shall be sufficient when raised or closed, or a supplementary system shall be provided, to prevent a power wheelchair or mobility aid from riding over or defeating it. The outer barrier of the lift shall automatically rise or close, or a supplementary system shall automatically engage, and remain raised, closed, or engaged at all times that the lift is more than 3 inches above the station platform or roadway and the lift is occupied. Alternatively, a barrier or system may be raised, lowered, opened, closed, engaged or disengaged by the lift operator provided an interlock or inherent design feature prevents the lift from rising unless the barrier is raised or closed or the supplementary system is engaged.

(6) *Platform surface*. The lift platform surface shall be free of any protrusions over ¼ inch high and shall be slip resistant. The lift platform shall have a minimum clear width of 28½ inches at the platform, a minimum clear width of 30 inches measured from 2 inches above the lift platform surface to 30 inches above the surface, and a minimum clear length of 48 inches measured from 2 inches above the surface of the platform to 30 inches above the surface. (See Fig. 1)

(7) *Platform gaps*. Any openings between the lift platform surface and the raised barriers shall not exceed ⅝ inch wide. When the lift is at vehicle floor height with the inner barrier (if applicable) down or retracted, gaps between the forward lift platform edge and vehicle floor shall not exceed ½ inch horizontally and ⅝ inch vertically. Platforms on semiautomatic lifts may have a hand hold not exceeding 1½ inches by 4½ inches located between the edge barriers.

(8) *Platform entrance ramp*. The entrance ramp, or loading-edge barrier used as a ramp, shall not exceed a slope of 1:8 measured on level ground, for a maximum rise of 3 inches, and the transition from the station platform or roadway to ramp may be vertical without edge treatment up to ¼ inch. Thresholds between ¼ inch and ½ inch high shall be beveled with a slope no greater than 1:2.

(9) *Platform deflection*. The lift platform (not including the entrance ramp) shall not deflect more than 3 degrees (exclusive of vehicle roll) in any direction between its unloaded position and its position when loaded with 600 pounds applied through a 26 inch by 26 inch test pallet at the centroid of the lift platform.

(10) *Platform movement*. No part of the platform shall move at a rate exceeding 6 inches/second during lowering and lifting an occupant, and shall not exceed 12 inches/second during deploying or stowing. This requirement does not apply to the deployment or stowage cycles of lifts that are manually deployed or stowed. The maximum platform horizontal and vertical acceleration when occupied shall be 0.3g.

(11) *Boarding direction*. The lift shall permit both inboard and outboard facing of wheelchairs and mobility aids.

(12) *Use by standees*. Lifts shall accommodate persons using walkers, crutches, canes or braces or who otherwise have difficulty using steps. The lift may be marked to indicate a preferred standing position.

(13) *Handrails*. Platforms on lifts shall be equipped with handrails, on two sides, which move in tandem with the lift which shall be graspable and provide support to standees throughout the entire lift operation. Handrails shall have a usable component at least 8 inches long with the lowest portion a minimum 30 inches above the platform and the highest portion a maximum 38 inches above the platform. The handrails shall be capable of withstanding a force of 100 pounds concentrated at any point on the handrail without permanent deformation of the rail or its supporting structure. Handrails shall have a cross-sectional diameter between 1¼ inches and 1½ inches or shall provide an equivalent grasping surface, and have eased edges with corner radii of not less than ⅛ inch. Handrails shall be placed to provide a minimum 1½ inches knuckle clearance from the nearest adjacent surface. Handrails shall not interfere with wheelchair or mobility aid maneuverability when entering or leaving the vehicle.

(c) *Vehicle ramp or bridge plate*—(1) *Design load*. Ramps or bridge plates 30 inches or longer shall support a load of 600 pounds, placed at the centroid of the ramp or bridge plate distributed over an area of 26 inches by 26 inches, with a safety factor of at least 3 based on the ultimate strength of the material. Ramps or bridge plates shorter than 30 inches shall support a load of 300 pounds.

(2) *Ramp surface*. The ramp or bridge plate surface shall be continuous and slip resistant, shall not have protrusions from the surface greater than ¼ inch, shall have a clear width of 30 inches, and shall accommodate both four-wheel and three-wheel mobility aids.

(3) *Ramp threshold*. The transition from roadway or station platform and the transition from vehicle floor to the ramp or bridge plate may be vertical without edge treatment up to ¼ inch. Changes in level between ¼ inch and ½ inch shall be beveled with a slope no greater than 1:2.

(4) *Ramp barriers*. Each side of the ramp or bridge plate shall have barriers at least 2 inches high to prevent mobility aid wheels from slipping off.

(5) *Slope*. Ramps or bridge plates shall have the least slope practicable. If the height of the vehicle floor, under 50% passenger load, from which the ramp is deployed is 3 inches or less above the station platform a maximum slope of 1:4 is permitted; if the height of the vehicle floor, under 50% passenger load, from which the ramp is deployed is 6 inches or less, but more than 3 inches, above the station platform a maximum slope of 1:6 is permitted; if the height of the vehicle floor, under 50% passenger load, from which the ramp is deployed is 9 inches or less, but more than 6 inches, above the station platform a maximum slope of 1:8 is permitted; if the height of the vehicle floor, under 50% passenger load, from which the ramp is deployed is greater than 9 inches above the station platform a slope of 1:12 shall be achieved. Folding or telescoping ramps are permitted provided they meet all structural requirements of this section.

(6) *Attachment*—(i) *Requirement*. When in use for boarding or alighting, the ramp or bridge plate shall be attached to the vehicle, or otherwise prevented from moving such that it is not subject to displacement when loading or unloading a heavy power mobility aid and that any gaps between vehicle and ramp or bridge plate, and station platform and ramp or bridge plate, shall not exceed ⅝ inch.

(ii) *Exception*. Ramps or bridge plates which are attached to, and deployed from, station platforms are permitted in lieu of vehicle devices provided they meet the displacement requirements of paragraph (c)(6)(i) of this section.

(7) *Stowage*. A compartment, securement system, or other appropriate method shall be provided to ensure that stowed ramps or bridge plates, including portable ramps or bridge plates stowed in the passenger area, do not impinge on a passenger's wheelchair or mobility aid or pose any hazard to passengers in the event of a sudden stop.

(8) *Handrails*. If provided, handrails shall allow persons with disabilities to grasp them from outside the vehicle while starting to board, and to continue to use them throughout the boarding process, and shall have the top between 30 inches and 38 inches above the ramp surface. The handrails shall be capable of withstanding a force of 100 pounds concentrated at any point on the handrail without permanent deformation of the rail or its supporting structure. The handrail shall have a cross-sectional diameter between 1¼ inches and 1½ inches or shall provide an equivalent grasping surface, and have eased edges with corner radii of not less than ⅛ inch. Handrails shall not interfere with wheelchair or mobility aid maneuverability when entering or leaving the vehicle.

§ 1192.85 Between-car barriers.

Where vehicles operate in a high-platform, level-boarding mode, devices or systems shall be provided to prevent, deter or warn individuals from inadvertently stepping off the platform between cars. Appropriate devices include, but are not limited to, pantograph gates, chains, motion detectors or other suitable devices.

§ 1192.87 Public information system.

(a) Each vehicle shall be equipped with an interior public address system permitting transportation system personnel, or recorded or digitized human speech messages, to announce stations and provide other passenger information. Alternative systems or devices which provide equivalent access are also permitted.

(b) [Reserved]

Subpart E—Commuter Rail Cars and Systems

§ 1192.91 General.

(a) New, used and remanufactured commuter rail cars, to be considered accessible by regulations issued by the Department of Transportation in 49 CFR part 37, shall comply with this subpart.

(b) If portions of the car are modified in such a way that it affects or could affect accessibility, each such portion shall comply, to the extent practicable, with the applicable provisions of this subpart. This provision does not require that inaccessible cars be retrofitted with lifts, ramps or other boarding devices.

(c)(1) Commuter rail cars shall comply with §§ 1192.93(d) and 1192.109 for level boarding wherever structurally and operationally practicable.

(2) Where level boarding is not structurally or operationally practicable, commuter rail cars shall comply with § 1192.95.

(d) Existing vehicles retrofitted to comply with the ''one-car-per-train rule'' at 49 CFR 37.93 shall comply with §§ 1192.93(e), 1192.95(a) and 1192.107 and shall have, in new and key stations, at least one door on each side from which passengers board which complies with § 1192.93(d). Vehicles previously designed and manufactured in accordance with the program accessibility requirements of section 504 of the Rehabilitation Act of 1973, or implementing regulations issued by the Department of Transportation that were in effect before October 7, 1991, and which can be entered and used from stations in which they are to be operated, may be used to satisfy the requirements of 49 CFR 37.93.

§ 1192.93 Doorways.

(a) *Clear width*. (1) At least one door on each side of the car from which passengers board opening onto station platforms and at least one adjacent doorway into the passenger coach compartment, if provided, shall have a minimum clear opening of 32 inches.

(2) If doorways connecting adjoining cars in a multi-car train are provided, and if such doorway is connected by an aisle with a minimum clear width of 30 inches to one or more spaces where wheelchair or mobility aid users can be accommodated, then such doorway shall have, to the maximum extent practicable in accordance with the regulations issued under the Federal Railroad Safety Act of 1970 (49 CFR parts 229 and 231), a clear opening of 30 inches.

(b) *Passageways*. A route at least 32 inches wide shall be provided from doors required to be accessible by paragraph (a)(1) of this section to seating locations complying with § 1192.95(d). In

cars where such doorways require passage through a vestibule, such vestibule shall have a minimum width of 42 inches. (See Fig. 3)

(c) *Signals.* If doors to the platform close automatically or from a remote location, auditory and visual warning signals shall be provided to alert passengers of closing doors.

(d) *Coordination with boarding platform*—(1) *Requirements.* Cars operating in stations with high platforms, or mini-high platforms, shall be coordinated with the boarding platform design such that the horizontal gap between a car at rest and the platform shall be no greater than 3 inches and the height of the car floor shall be within plus or minus ⅝ inch of the platform height. Vertical alignment may be accomplished by car air suspension, platform lifts or other devices, or any combination.

(2) *Exception.* New vehicles operating in existing stations may have a floor height within plus or minus 1½ inches of the platform height. At key stations, the horizontal gap between at least one accessible door of each such vehicle and the platform shall be no greater than 3 inches.

(3) *Exception.* Where platform setbacks do not allow the horizontal gap or vertical alignment specified in paragraph (d) (1) or (2) of this section, car, platform or portable lifts complying with § 1192.95(b), or car or platform ramps or bridge plates, complying with § 1192.95(c), shall be provided.

(4) *Exception.* Retrofitted vehicles shall be coordinated with the platform in new and key stations such that the horizontal gap shall be no greater than 4 inches and the height of the vehicle floor, under 50% passenger load, shall be within plus or minus 2 inches of the platform height.

(e) *Signage.* The International Symbol of Accessibility shall be displayed on the exterior of all doors complying with this section unless all cars are accessible and are not marked by the access symbol (See Fig. 6). Appropriate signage shall also indicate which accessible doors are adjacent to an accessible restroom, if applicable.

§ 1192.95 Mobility aid accessibility.

(a)(1) *General.* All new commuter rail cars, other than level entry cars, covered by this subpart shall provide a level-change mechanism or boarding device (e.g., lift, ramp or bridge plate) complying with either paragraph (b) or (c) of this section; sufficient clearances to permit a wheelchair or mobility aid user to reach a seating location; and at least two wheelchair or mobility aid seating locations complying with paragraph (d) of this section.

(2) *Exception.* If portable or platform lifts, ramps or bridge plates meeting the applicable requirements of this section are provided on station platforms or other stops, or mini-high platforms complying with § 1192.93(d) are provided, at stations or stops required to be accessible by 49 CFR part 37, the car is not required to be equipped with a car-borne device. Where each new car is compatible with a single platform-mounted access system or device, additional systems or devices are not required for each car provided that the single device could be used to provide access to each new car if passengers using wheelchairs or mobility aids could not be accommodated on a single car.

(b) *Car Lift*—(1) *Design load.* The design load of the lift shall be at least 600 pounds. Working parts, such as cables, pulleys, and shafts, which can be expected to wear, and upon which the lift depends for support of the load, shall have a safety factor of at least six, based on the ultimate strength of the material. Nonworking parts, such as platform, frame, and attachment hardware which would not be expected to wear, shall have a safety factor of at least three, based on the ultimate strength of the material.

(2) *Controls*—(i) *Requirements.* The controls shall be interlocked with the car brakes, propulsion system, or door, or shall provide other appropriate mechanisms or systems, to ensure that the car cannot be moved when the lift is not stowed and so the lift cannot be deployed unless the interlocks or systems are engaged. The lift shall deploy to all platform levels normally encountered in the operating environment. Where provided, each control for deploying, lowering, raising, and stowing

the lift and lowering the roll-off barrier shall be of a momentary contact type requiring continuous manual pressure by the operator and shall not allow improper lift sequencing when the lift platform is occupied. The controls shall allow reversal of the lift operation sequence, such as raising or lowering a platform that is part way down, without allowing an occupied platform to fold or retract into the stowed position.

(ii) *Exception*. Where physical or safety constraints prevent the deployment at some stops of a lift having its long dimension perpendicular to the car axis, the transportation entity may specify a lift which is designed to deploy with its long dimension parallel to the car axis and which pivots into or out of the car while occupied (i.e., ''rotary lift''). The requirements of paragraph (b)(2)(i) of this section prohibiting the lift from being stowed while occupied shall not apply to a lift design of this type if the stowed position is within the passenger compartment and the lift is intended to be stowed while occupied.

(iii) *Exception*. The brake or propulsion system interlock requirement does not apply to a platform mounted or portable lift provided that a mechanical, electrical or other system operates to ensure that cars do not move when the lift is in use.

(3) *Emergency operation*. The lift shall incorporate an emergency method of deploying, lowering to ground or platform level with a lift occupant, and raising and stowing the empty lift if the power to the lift fails. No emergency method, manual or otherwise, shall be capable of being operated in a manner that could be hazardous to the lift occupant or to the operator when operated according to manufacturer's instructions, and shall not permit the platform to be stowed or folded when occupied, unless the lift is a rotary lift intended to be stowed while occupied.

(4) *Power or equipment failure*. Platforms stowed in a vertical position, and deployed platforms when occupied, shall have provisions to prevent their deploying, falling, or folding any faster than 12 inches/second or their dropping of an occupant in the event of a single failure of any load carrying component.

(5) *Platform barriers*. The lift platform shall be equipped with barriers to prevent any of the wheels of a wheelchair or mobility aid from rolling off the lift during its operation. A movable barrier or inherent design feature shall prevent a wheelchair or mobility aid from rolling off the edge closest to the car until the lift is in its fully raised position. Each side of the lift platform which, in its raised position, extends beyond the car shall have a barrier a minimum 1½ inches high. Such barriers shall not interfere with maneuvering into or out of the car. The loading-edge barrier (outer barrier) which functions as a loading ramp when the lift is at ground or station platform level, shall be sufficient when raised or closed, or a supplementary system shall be provided, to prevent a power wheelchair or mobility aid from riding over or defeating it. The outer barrier of the lift shall automatically rise or close, or a supplementary system shall automatically engage, and remain raised, closed, or engaged at all times that the lift platform is more than 3 inches above the station platform and the lift is occupied. Alternatively, a barrier or system may be raised, lowered, opened, closed, engaged or disengaged by the lift operator provided an interlock or inherent design feature prevents the lift from rising unless the barrier is raised or closed or the supplementary system is engaged.

(6) *Platform surface*. The lift platform surface shall be free of any protrusions over ¼ inch high and shall be slip resistant. The lift platform shall have a minimum clear width of 28½ inches at the platform, a minimum clear width of 30 inches measured from 2 inches above the lift platform surface to 30 inches above the surface, and a minimum clear length of 48 inches measured from 2 inches above the surface of the platform to 30 inches above the surface. (See Fig. 1)

(7) *Platform gaps*. Any openings between the lift platform surface and the raised barriers shall not exceed ⅝ inch wide. When the lift is at car floor height with the inner barrier down (if applicable) or retracted, gaps between the forward lift platform edge and car

floor shall not exceed ½ inch horizontally and ⅝ inch vertically. Platforms on semi-automatic lifts may have a hand hold not exceeding 1½ inches by 4½ inches located between the edge barriers.

(8) *Platform entrance ramp.* The entrance ramp, or loading-edge barrier used as a ramp, shall not exceed a slope of 1:8, when measured on level ground, for a maximum rise of 3 inches, and the transition from station platform to ramp may be vertical without edge treatment up to ¼ inch. Thresholds between ¼ inch and ½ inch high shall be beveled with a slope no greater than 1:2.

(9) *Platform deflection.* The lift platform (not including the entrance ramp) shall not deflect more than 3 degrees (exclusive of vehicle roll) in any direction between its unloaded position and its position when loaded with 600 pounds applied through a 26 inch by 26 inch test pallet at the centroid of the lift platform.

(10) *Platform movement.* No part of the platform shall move at a rate exceeding 6 inches/second during lowering and lifting an occupant, and shall not exceed 12 inches/second during deploying or stowing. This requirement does not apply to the deployment or stowage cycles of lifts that are manually deployed or stowed. The maximum platform horizontal and vertical acceleration when occupied shall be 0.3g.

(11) *Boarding direction.* The lift shall permit both inboard and outboard facing of wheelchairs and mobility aids.

(12) *Use by standees.* Lifts shall accommodate persons using walkers, crutches, canes or braces or who otherwise have difficulty using steps. The lift may be marked to indicate a preferred standing position.

(13) *Handrails.* Platforms on lifts shall be equipped with handrails, on two sides, which move in tandem with the lift which shall be graspable and provide support to standees throughout the entire lift operation. Handrails shall have a usable component at least 8 inches long with the lowest portion a minimum 30 inches above the platform and the highest portion a maximum 38 inches above the platform. The handrails shall be capable of withstanding a force of 100 pounds concentrated at any point on the handrail without permanent deformation of the rail or its supporting structure. The handrail shall have a cross-sectional diameter between 1¼ inches and 1½ inches or shall provide an equivalent grasping surface, and have eased edges with corner radii of not less than ⅛ inch. Handrails shall be placed to provide a minimum 1½ inches knuckle clearance from the nearest adjacent surface. Handrails shall not interfere with wheelchair or mobility aid maneuverability when entering or leaving the car.

(c) *Car ramp or bridge plate*—(1) *Design load.* Ramps or bridge plates 30 inches or longer shall support a load of 600 pounds, placed at the centroid of the ramp or bridge plate distributed over an area of 26 inches by 26 inches, with a safety factor of at least 3 based on the ultimate strength of the material. Ramps or bridge plates shorter than 30 inches shall support a load of 300 pounds.

(2) *Ramp surface.* The ramp or bridge plate surface shall be continuous and slip resistant, shall not have protrusions from the surface greater than ¼ inch high, shall have a clear width of 30 inches and shall accommodate both four-wheel and three-wheel mobility aids.

(3) *Ramp threshold.* The transition from station platform to the ramp or bridge plate and the transition from car floor to the ramp or bridge plate may be vertical without edge treatment up to ¼ inch. Changes in level between ¼ inch and ½ inch shall be beveled with a slope no greater than 1:2.

(4) *Ramp barriers.* Each side of the ramp or bridge plate shall have barriers at least 2 inches high to prevent mobility aid wheels from slipping off.

(5) *Slope.* Ramps or bridge plates shall have the least slope practicable. If the height of the vehicle floor, under 50% passenger load, from which the ramp is deployed is 3 inches or less above the station platform a maximum slope of 1:4 is permitted; if the height of the vehicle floor, under 50% passenger load, from which the ramp is deployed is 6 inches or less, but more than 3 inches, above the station platform a maximum slope of 1:6 is permitted; if the height

of the vehicle floor, under 50% passenger load, from which the ramp is deployed is 9 inches or less, but more than 6 inches, above the station platform a maximum slope of 1:8 is permitted; if the height of the vehicle floor, under 50% passenger load, from which the ramp is deployed is greater than 9 inches above the station platform a slope of 1:12 shall be achieved. Folding or telescoping ramps are permitted provided they meet all structural requirements of this section.

(6) *Attachment*—(i) *Requirement*. When in use for boarding or alighting, the ramp or bridge plate shall be attached to the vehicle, or otherwise prevented from moving such that it is not subject to displacement when loading or unloading a heavy power mobility aid and that any gaps between vehicle and ramp or bridge plates, and station platform and ramp or bridge plate, shall not exceed ⅝ inch.

(ii) *Exception*. Ramps or bridge plates which are attached to, and deployed from, station platforms are permitted in lieu of car devices provided they meet the displacement requirements of paragraph (c)(6)(i) of this section.

(7) *Stowage*. A compartment, securement system, or other appropriate method shall be provided to ensure that stowed ramps or bridge plates, including portable ramps or bridge plates stowed in the passenger area, do not impinge on a passenger's wheelchair or mobility aid or pose any hazard to passengers in the event of a sudden stop.

(8) *Handrails*. If provided, handrails shall allow persons with disabilities to grasp them from outside the car while starting to board, and to continue to use them throughout the boarding process, and shall have the top between 30 inches and 38 inches above the ramp surface. The handrails shall be capable of withstanding a force of 100 pounds concentrated at any point on the handrail without permanent deformation of the rail or its supporting structure. The handrail shall have a cross-sectional diameter between 1¼ inches and 1½ inches or shall provide an equivalent grasping surface, and have eased edges with corner radii of not less than ⅛ inch. Handrails shall not interfere with wheelchair or mobility aid maneuverability when entering or leaving the car.

(d) *Mobility aid seating location*. Spaces for persons who wish to remain in their wheelchairs or mobility aids shall have a minimum clear floor space 48 inches by 30 inches. Such spaces shall adjoin, and may overlap, an accessible path. Not more than 6 inches of the required clear floor space may be accommodated for footrests under another seat provided there is a minimum of 9 inches from the floor to the lowest part of the seat overhanging the space. Seating spaces may have fold-down or removable seats to accommodate other passengers when a wheelchair or mobility aid user is not occupying the area, provided the seats, when folded up, do not obstruct the clear floor space required. (See Fig. 2)

§ 1192.97 Interior circulation, handrails and stanchions.

(a) Where provided, handrails or stanchions within the passenger compartment shall be placed to permit sufficient turning and maneuvering space for wheelchairs and other mobility aids to reach a seating location, complying with § 1192.95(d), from an accessible entrance. The diameter or width of the gripping surface of interior handrails and stanchions shall be 1¼ inches to 1½ inches or shall provide an equivalent gripping surface. Handrails shall be placed to provide a minimum 1½ inches knuckle clearance from the nearest adjacent surface.

(b) Where provided, handrails or stanchions shall be sufficient to permit safe boarding, on-board circulation, seating and standing assistance, and alighting by persons with disabilities.

(c) At entrances equipped with steps, handrails or stanchions shall be provided in the entrance to the car in a configuration which allows passengers to grasp such assists from outside the car while starting to board, and to continue using such assists throughout the boarding process, to the extent permitted by 49 CFR part 231.

§ 1192.99 Floors, steps and thresholds.

(a) Floor surfaces on aisles, step treads, places for standees, and areas where wheelchair and mobility aid

users are to be accommodated shall be slip-resistant.

(b) All thresholds and step edges shall have a band of color(s) running the full width of the step or threshold which contrasts from the step tread and riser or adjacent floor, either light-on-dark or dark-on-light.

§ 1192.101 Lighting.

(a) Any stepwell or doorway with a lift, ramp or bridge plate shall have, when the door is open, at least 2 foot-candles of illumination measured on the step tread, ramp, bridge plate, or lift platform.

(b) The doorways of cars not operating at lighted station platforms shall have outside lights which, when the door is open, provide at least 1 foot-candle of illumination on the station platform surface for a distance of 3 feet perpendicular to all points on the bottom step tread edge. Such lights shall be shielded to protect the eyes of entering and exiting passengers.

§ 1192.103 Public information system.

(a) Each car shall be equipped with an interior public address system permitting transportation system personnel, or recorded or digitized human speech messages, to announce stations and provide other passenger information. Alternative systems or devices which provide equivalent access are also permitted.

(b) [Reserved]

§ 1192.105 Priority seating signs.

(a) Each car shall contain sign(s) which indicate that certain seats are priority seats for persons with disabilities and that other passengers should make such seats available to those who wish to use them.

(b) Characters on signs required by paragraph (a) shall have a width-to-height ratio between 3:5 and 1:1 and a stroke width-to-height ratio between 1:5 and 1:10, with a minimum character height (using an upper case ''X'') of ⅝ inch, with ''wide'' spacing (generally, the space between letters shall be 1/16 the height of upper case letters), and shall contrast with the background either light-on-dark or dark-on-light.

§ 1192.107 Restrooms.

(a) If a restroom is provided for the general public, it shall be designed so as to allow a person using a wheelchair or mobility aid to enter and use such restroom as specified in paragraphs (a)(1) through (5) of this section.

(1) The minimum clear floor area shall be 35 inches by 60 inches. Permanently installed fixtures may overlap this area a maximum of 6 inches, if the lowest portion of the fixture is a minimum of 9 inches above the floor, and may overlap a maximum of 19 inches, if the lowest portion of the fixture is a minimum of 29 inches above the floor, provided such fixtures do not interfere with access to the water closet. Fold-down or retractable seats or shelves may overlap the clear floor space at a lower height provided they can be easily folded up or moved out of the way.

(2) The height of the water closet shall be 17 inches to 19 inches measured to the top of the toilet seat. Seats shall not be sprung to return to a lifted position.

(3) A grab bar at least 24 inches long shall be mounted behind the water closet, and a horizontal grab bar at least 40 inches long shall be mounted on at least one side wall, with one end not more than 12 inches from the back wall, at a height between 33 inches and 36 inches above the floor.

(4) Faucets and flush controls shall be operable with one hand and shall not require tight grasping, pinching, or twisting of the wrist. The force required to activate controls shall be no greater than 5 lbf (22.2 N). Controls for flush valves shall be mounted no more than 44 inches above the floor.

(5) Doorways on the end of the enclosure, opposite the water closet, shall have a minimum clear opening width of 32 inches. Doorways on the side wall shall have a minimum clear opening width of 39 inches. Door latches and hardware shall be operable with one hand and shall not require tight grasping, pinching, or twisting of the wrist.

(b) Restrooms required to be accessible shall be in close proximity to at least one seating location for persons using mobility aids and shall be connected to such a space by an unobstructed path having a minimum width of 32 inches.

§ 1192.109 Between-car barriers.

Where vehicles operate in a high-platform, level-boarding mode, and where between-car bellows are not provided, devices or systems shall be provided to prevent, deter or warn individuals from inadvertently stepping off the platform between cars. Appropriate devices include, but are not limited to, pantograph gates, chains, motion detectors or other suitable devices.

Subpart F—Intercity Rail Cars and Systems

§ 1192.111 General.

(a) New, used and remanufactured intercity rail cars, to be considered accessible by regulations issued by the Department of Transportation in 49 CFR part 37, shall comply with this subpart to the extent required for each type of car as specified below.

(1) Single-level rail passenger coaches and food service cars (other than single-level dining cars) shall comply with §§ 1192.113 through 1192.123. Compliance with § 1192.125 shall be required only to the extent necessary to meet the requirements of paragraph (d) of this section.

(2) Single-level dining and lounge cars shall have at least one connecting doorway complying with § 1192.113(a)(2), connected to a car accessible to persons using wheelchairs or mobility aids, and at least one space complying with § 1192.125(d) (2) and (3), to provide table service to a person who wishes to remain in his or her wheelchair, and space to fold and store a wheelchair for a person who wishes to transfer to an existing seat.

(3) Bi-level dining cars shall comply with §§ 1192.113(a)(2), 1192.115(b), 1192.117(a), and 1192.121.

(4) Bi-level lounge cars shall have doors on the lower level, on each side of the car from which passengers board, complying with § 1192.113, a restroom complying with § 1192.123, and at least one space complying with § 1192.125(d) (2) and (3) to provide table service to a person who wishes to remain in his or her wheelchair and space to fold and store a wheelchair for a person who wishes to transfer to an existing seat.

(5) Restrooms complying with § 1192.123 shall be provided in single-level rail passenger coaches and food service cars adjacent to the accessible seating locations required by paragraph (d) of this section. Accessible restrooms are required in dining and lounge cars only if restrooms are provided for other passengers.

(6) Sleeper cars shall comply with §§ 1192.113 (b) through (d), 1192.115 through 1192.121, and 1192.125, and have at least one compartment which can be entered and used by a person using a wheelchair or mobility aid and complying with § 1192.127.

(b)(1) If physically and operationally practicable, intercity rail cars shall comply with § 1192.113(d) for level boarding.

(2) Where level boarding is not structurally or operationally practicable, intercity rail cars shall comply with § 1192.125.

(c) If portions of the car are modified in a way that affects or could affect accessibility, each such portion shall comply, to the extent practicable, with the applicable provisions of this subpart. This provision does not require that inaccessible cars be retrofitted with lifts, ramps or other boarding devices.

(d) Passenger coaches or food service cars shall have the number of spaces complying with § 1192.125(d)(2) and the number of spaces complying with § 1192.125(d)(3), as required by 49 CFR 37.91.

(e) Existing cars retrofitted to meet the seating requirements of 49 CFR 37.91 shall comply with §§ 1192.113(e), 1192.123, 1192.125(d) and shall have at least one door on each side from which passengers board complying with § 1192.113(d). Existing cars designed and manufactured to be accessible in accordance with Department of Transportation regulations implementing section 504 of the Rehabilitation Act of 1973 that were in effect before October 7, 1991, shall comply with § 1192.125(a).

§ 1192.113 Doorways.

(a) *Clear width.* (1) At least one doorway, on each side of the car from which passengers board, of each car required to be accessible by § 1192.111(a) and where the spaces required by

§ 1192.111(d) are located, and at least one adjacent doorway into coach passenger compartments shall have a minimum clear opening width of 32 inches.

(2) Doorways at ends of cars connecting two adjacent cars, to the maximum extent practicable in accordance with regulations issued under the Federal Railroad Safety Act of 1970 (49 CFR parts 229 and 231), shall have a clear opening width of 32 inches to permit wheelchair and mobility aid users to enter into a single-level dining car, if available.

(b) *Passaway*. Doorways required to be accessible by paragraph (a) of this section shall permit access by persons using mobility aids and shall have an unobstructed passageway at least 32 inches wide leading to an accessible sleeping compartment complying with § 1192.127 or seating locations complying with § 1192.125(d). In cars where such doorways require passage through a vestibule, such vestibule shall have a minimum width of 42 inches. (see Fig. 4)

(c) *Signals*. If doors to the platform close automatically or from a remote location, auditory and visual warning signals shall be provided to alert passengers of closing doors.

(d) *Coordination with boarding platforms*—(1) *Requirements*. Cars which provide level-boarding in stations with high platforms shall be coordinated with the boarding platform or mini-high platform design such that the horizontal gap between a car at rest and the platform shall be no greater than 3 inches and the height of the car floor shall be within plus or minus ⅝ inch of the platform height. Vertical alignment may be accomplished by car air suspension, platform lifts or other devices, or any combination.

(2) *Exception*. New cars operating in existing stations may have a floor height within plus or minus 1½ inches of the platform height.

(3) *Exception*. Where platform setbacks do not allow the horizontal gap or vertical alignment specified in paragraph (d) (1) or (2) of this section, platform or portable lifts complying with § 1192.125(b), or car or platform bridge plates, complying with § 1192.125(c), may be provided.

(4) *Exception*. Retrofitted vehicles shall be coordinated with the platform in existing stations such that the horizontal gap shall be no greater than 4 inches and the height of the vehicle floor, under 50% passenger load, shall be within plus or minus 2 inches of the platform height.

(e) *Signage*. The International Symbol of Accessibility shall be displayed on the exterior of all doors complying with this section unless all cars and doors are accessible and are not marked by the access symbol (see Fig. 6). Appropriate signage shall also indicate which accessible doors are adjacent to an accessible restroom, if applicable.

§ 1192.115 Interior circulation, handrails and stanchions.

(a) Where provided, handrails or stanchions within the passenger compartment shall be placed to permit sufficient turning and maneuvering space for wheelchairs and other mobility aids to reach a seating location, complying with § 1192.125(d), from an accessible entrance. The diameter or width of the gripping surface of interior handrails and stanchions shall be 1¼ inches to 1½ inches or shall provide an equivalent gripping surface. Handrails shall be placed to provide a minimum 1½ inches knuckle clearance from the nearest adjacent surface.

(b) Where provided, handrails and stanchions shall be sufficient to permit safe boarding, on-board circulation, seating and standing assistance, and alighting by persons with disabilities.

(c) At entrances equipped with steps, handrails or stanchions shall be provided in the entrance to the car in a configuration which allows passengers to grasp such assists from outside the car while starting to board, and to continue using such assists throughout the boarding process, to the extent permitted by 49 CFR part 231.

§ 1192.117 Floors, steps and thresholds.

(a) Floor surfaces on aisles, step treads and areas where wheelchair and mobility aid users are to be accommodated shall be slip-resistant.

(b) All step edges and thresholds shall have a band of color(s) running the full width of the step or threshold

which contrasts from the step tread and riser or adjacent floor, either light-on-dark or dark-on-light.

§ 1192.119 Lighting.

(a) Any stepwell, or doorway with a lift, ramp or bridge plate, shall have, when the door is open, at least 2 foot-candles of illumination measured on the step tread, ramp, bridge plate or lift platform.

(b) The doorways of cars not operating at lighted station platforms shall have outside lights which, when the door is open, provide at least 1 foot-candle of illumination on the station platform surface for a distance of 3 feet perpendicular to all points on the bottom step tread edge. Such lights shall be shielded to protect the eyes of entering and exiting passengers.

§ 1192.121 Public information system.

(a) Each car shall be equipped with a public address system permitting transportation system personnel, or recorded or digitized human speech messages, to announce stations and provide other passenger information. Alternative systems or devices which provide equivalent access are also permitted.

(b) [Reserved]

§ 1192.123 Restrooms.

(a) If a restroom is provided for the general public, and an accessible restroom is required by § 1192.111 (a) and (e), it shall be designed so as to allow a person using a wheelchair or mobility aid to enter and use such restroom as specified in paragraphs (a) (1) through (5) of this section.

(1) The minimum clear floor area shall be 35 inches by 60 inches. Permanently installed fixtures may overlap this area a maximum of 6 inches, if the lowest portion of the fixture is a minimum of 9 inches above the floor, and may overlap a maximum of 19 inches, if the lowest portion of the fixture is a minimum of 29 inches above the floor. Fixtures shall not interfere with access to and use of the water closet. Fold-down or retractable seats or shelves may overlap the clear floor space at a lower height provided they can be easily folded up or moved out of the way.

(2) The height of the water closet shall be 17 inches to 19 inches measured to the top of the toilet seat. Seats shall not be sprung to return to a lifted position.

(3) A grab bar at least 24 inches long shall be mounted behind the water closet, and a horizontal grab bar at least 40 inches long shall be mounted on at least one side wall, with one end not more than 12 inches from the back wall, at a height between 33 inches and 36 inches above the floor.

(4) Faucets and flush controls shall be operable with one hand and shall not require tight grasping, pinching, or twisting of the wrist. The force required to activate controls shall be no greater than 5 lbf (22.2 N). Controls for flush valves shall be mounted no more than 44 inches above the floor.

(5) Doorways on the end of the enclosure, opposite the water closet, shall have a minimum clear opening width of 32 inches. Doorways on the side wall shall have a minimum clear opening width of 39 inches. Door latches and hardware shall be operable with one hand and shall not require tight grasping, pinching, or twisting of the wrist.

(b) Restrooms required to be accessible shall be in close proximity to at least one seating location for persons using mobility aids complying with § 1192.125(d) and shall be connected to such a space by an unobstructed path having a minimum width of 32 inches.

§ 1192.125 Mobility aid accessibility.

(a)(1) *General.* All intercity rail cars, other than level entry cars, required to be accessible by § 1192.111 (a) and (e) of this subpart shall provide a level-change mechanism or boarding device (e.g., lift, ramp or bridge plate) complying with either paragraph (b) or (c) of this section and sufficient clearances to permit a wheelchair or other mobility aid user to reach a seating location complying with paragraph (d) of this section.

(2) *Exception.* If portable or platform lifts, ramps or bridge plates meeting the applicable requirements of this section are provided on station platforms or other stops, or mini-high platforms complying with § 1192.113(d) are provided, at stations or stops required to be accessible by 49 CFR part 37, the car

is not required to be equipped with a car-borne device.

(b) *Car Lift*—(1) *Design load.* The design load of the lift shall be at least 600 pounds. Working parts, such as cables, pulleys, and shafts, which can be expected to wear, and upon which the lift depends for support of the load, shall have a safety factor of at least six, based on the ultimate strength of the material. Nonworking parts, such as platform, frame, and attachment hardware which would not be expected to wear, shall have a safety factor of at least three, based on the ultimate strength of the material.

(2) *Controls*—(i) *Requirements.* The controls shall be interlocked with the car brakes, propulsion system, or door, or shall provide other appropriate mechanisms or systems, to ensure that the car cannot be moved when the lift is not stowed and so the lift cannot be deployed unless the interlocks or systems are engaged. The lift shall deploy to all platform levels normally encountered in the operating environment. Where provided, each control for deploying, lowering, raising, and stowing the lift and lowering the roll-off barrier shall be of a momentary contact type requiring continuous manual pressure by the operator and shall not allow improper lift sequencing when the lift platform is occupied. The controls shall allow reversal of the lift operation sequence, such as raising or lowering a platform that is part way down, without allowing an occupied platform to fold or retract into the stowed position.

(ii) *Exception.* Where physical or safety constraints prevent the deployment at some stops of a lift having its long dimension perpendicular to the car axis, the transportation entity may specify a lift which is designed to deploy with its long dimension parallel to the car axis and which pivots into or out of the car while occupied (i.e., ''rotary lift''). The requirements of paragraph (b)(2)(i) of this section prohibiting the lift from being stowed while occupied shall not apply to a lift design of this type if the stowed position is within the passenger compartment and the lift is intended to be stowed while occupied.

(iii) *Exception.* The brake or propulsion system interlocks requirement does not apply to platform mounted or portable lifts provided that a mechanical, electrical or other system operates to ensure that cars do not move when the lift is in use.

(3) *Emergency operation.* The lift shall incorporate an emergency method of deploying, lowering to ground or station platform level with a lift occupant, and raising and stowing the empty lift if the power to the lift fails. No emergency method, manual or otherwise, shall be capable of being operated in a manner that could be hazardous to the lift occupant or to the operator when operated according to manufacturer's instructions, and shall not permit the platform to be stowed or folded when occupied, unless the lift is a rotary lift and is intended to be stowed while occupied.

(4) *Power or equipment failure.* Platforms stowed in a vertical position, and deployed platforms when occupied, shall have provisions to prevent their deploying, failing, or folding any faster than 12 inches/second or their dropping of an occupant in the event of a single failure of any load carrying component.

(5) *Platform barriers.* The lift platform shall be equipped with barriers to prevent any of the wheels of a wheelchair or mobility aid from rolling off the lift during its operation. A movable barrier or inherent design feature shall prevent a wheelchair or mobility aid from rolling off the edge closest to the car until the lift is in its fully raised position. Each side of the lift platform which, in its raised position, extends beyond the car shall have a barrier a minimum 1½ inches high. Such barriers shall not interfere with maneuvering into or out of the car. The loading-edge barrier (outer barrier) which functions as a loading ramp when the lift is at ground or station platform level, shall be sufficient when raised or closed, or a supplementary system shall be provided, to prevent a power wheelchair or mobility aid from riding over or defeating it. The outer barrier of the lift shall automatically rise or close, or a supplementary system shall automatically engage, and remain raised, closed, or engaged at all times

that the lift platform is more than 3 inches above the station platform and the lift is occupied. Alternatively, a barrier or system may be raised, lowered, opened, closed, engaged or disengaged by the lift operator provided an interlock or inherent design feature prevents the lift from rising unless the barrier is raised or closed or the supplementary system is engaged.

(6) *Platform surface.* The lift platform surface shall be free of any protrusions over ¼ inch high and shall be slip resistant. The lift platform shall have a minimum clear width of 28½ inches at the platform, a minimum clear width of 30 inches measured from 2 inches above the lift platform surface to 30 inches above the surface, and a minimum clear length of 48 inches measured from 2 inches above the surface of the platform to 30 inches above the surface. (See Fig. 1.)

(7) *Platform gaps.* Any openings between the lift platform surface and the raised barriers shall not exceed ⅝ inch wide. When the lift is at car floor height with the inner barrier (if applicable) down or retracted, gaps between the forward lift platform edge and car floor shall not exceed ½ inch horizontally and ⅝ inch vertically. Platforms on semi-automatic lifts may have a hand hold not exceeding 1½ inches by 4½ inches located between the edge barriers.

(8) *Platform entrance ramp.* The entrance ramp, or loading-edge barrier used as a ramp, shall not exceed a slope of 1:8, when measured on level ground, for a maximum rise of 3 inches, and the transition from station platform to ramp may be vertical without edge treatment up to ¼ inch. Thresholds between ¼ inch and ½ inch high shall be beveled with a slope no greater than 1:2.

(9) *Platform deflection.* The lift platform (not including the entrance ramp) shall not deflect more than 3 degrees (exclusive of car roll) in any direction between its unloaded position and its position when loaded with 600 pounds applied through a 26 inch by 26 inch test pallet at the centroid of the lift platform.

(10) *Platform movement.* No part of the platform shall move at a rate exceeding 6 inches/second during lowering and lifting an occupant, and shall not exceed 12 inches/second during deploying or stowing. This requirement does not apply to the deployment or stowage cycles of lifts that are manually deployed or stowed. The maximum platform horizontal and vertical acceleration when occupied shall be 0.3g.

(11) *Boarding direction.* The lift shall permit both inboard and outboard facing of wheelchairs and mobility aids.

(12) *Use by standees.* Lifts shall accommodate persons using walkers, crutches, canes or braces or who otherwise have difficulty using steps. The lift may be marked to indicate a preferred standing position.

(13) *Handrails.* Platforms on lifts shall be equipped with handrails, on two sides, which move in tandem with the lift, and which shall be graspable and provide support to standees throughout the entire lift operation. Handrails shall have a usable component at least 8 inches long with the lowest portion a minimum 30 inches above the platform and the highest portion a maximum 38 inches above the platform. The handrails shall be capable of withstanding a force of 100 pounds concentrated at any point on the handrail without permanent deformation of the rail or its supporting structure. The handrail shall have a cross-sectional diameter between 1¼ inches and 1½ inches or shall provide an equivalent grasping surface, and have eased edges with corner radii of not less than ⅛ inch. Handrails shall be placed to provide a minimum 1½ inches knuckle clearance from the nearest adjacent surface. Handrails shall not interfere with wheelchair or mobility aid maneuverability when entering or leaving the car.

(c) *Car ramp or bridge plate*—(1) *Design load.* Ramps or bridge plates 30 inches or longer shall support a load of 600 pounds, placed at the centroid of the ramp or bridge plate distributed over an area of 26 inches by 26 inches, with a safety factor of at least 3 based on the ultimate strength of the material. Ramps or bridge plates shorter than 30 inches shall support a load of 300 pounds.

(2) *Ramp surface.* The ramp or bridge plate surface shall be continuous and

slip resistant, shall not have protrusions from the surface greater than ¼ inch high, shall have a clear width of 30 inches and shall accommodate both four-wheel and three-wheel mobility aids.

(3) *Ramp threshold*. The transition from station platform to the ramp or bridge plate and the transition from car floor to the ramp or bridge plate may be vertical without edge treatment up to ¼ inch. Changes in level between ¼ inch and ½ inch shall be beveled with a slope no greater than 1:2.

(4) *Ramp barriers*. Each side of the ramp or bridge plate shall have barriers at least 2 inches high to prevent mobility aid wheels from slipping off.

(5) *Slope*. Ramps or bridge plates shall have the least slope practicable. If the height of the vehicle floor, under 50% passenger load, from which the ramp is deployed is 3 inches or less above the station platform a maximum slope of 1:4 is permitted; if the height of the vehicle floor, under 50% passenger load, from which the ramp is deployed is 6 inches or less, but more than 3 inches, above the station platform a maximum slope of 1:6 is permitted; if the height of the vehicle floor, under 50% passenger load, from which the ramp is deployed is 9 inches or less, but more than 6 inches, above the station platform a maximum slope of 1:8 is permitted; if the height of the vehicle floor, under 50% passenger load, from which the ramp is deployed is greater than 9 inches above the station platform a slope of 1:12 shall be achieved. Folding or telescoping ramps are permitted provided they meet all structural requirements of this section.

(6) *Attachment*—(i) *Requirement*. When in use for boarding or alighting, the ramp or bridge plate shall be attached to the vehicle, or otherwise prevented from moving such that it is not subject to displacement when loading or unloading a heavy power mobility aid and that any gaps between vehicle and ramp or bridge plate, and station platform and ramp or bridge plate, shall not exceed ⅝ inch.

(ii) *Exception*. Ramps or bridge plates which are attached to, and deployed from, station platforms are permitted in lieu of car devices provided they meet the displacement requirements of paragraph (c)(6)(i) of this section.

(7) *Stowage*. A compartment, securement system, or other appropriate method shall be provided to ensure that stowed ramps or bridge plates, including portable ramps or bridge plates stowed in the passenger area, do not impinge on a passenger's wheelchair or mobility aid or pose any hazard to passengers in the event of a sudden stop.

(8) *Handrails*. If provided, handrails shall allow persons with disabilities to grasp them from outside the car while starting to board, and to continue to use them throughout the boarding process, and shall have the top between 30 inches and 38 inches above the ramp surface. The handrails shall be capable of withstanding a force of 100 pounds concentrated at any point on the handrail without permanent deformation of the rail or its supporting structure. The handrail shall have a cross-sectional diameter between 1¼ inches and 1½ inches or shall provide an equivalent grasping surface, and have eased edges with corner radii of not less than ⅛ inch. Handrails shall not interfere with wheelchair or mobility aid maneuverability when entering or leaving the car.

(d) *Seating*—(1) *Requirements*. All intercity rail cars required to be accessible by § 1192.111 (a) and (e) of this subpart shall provide at least one, but not more than two, mobility aid seating location(s) complying with paragraph (d)(2) of this section; and at least one, but not more than two, seating location(s) complying with paragraph (d)(3) of this section which adjoin or overlap an accessible route with a minimum clear width of 32 inches.

(2) *Wheelchair or mobility aid spaces*. Spaces for persons who wish to remain in their wheelchairs or mobility aids shall have a minimum clear floor area 48 inches by 30 inches. Such space may have fold-down or removable seats for use when not occupied by a wheelchair or mobility aid user. (See Fig. 2)

(3) *Other spaces*. Spaces for individuals who wish to transfer shall include a regular coach seat or dining car booth or table seat and space to fold and store the passenger's wheelchair.

§ 1192.127 Sleeping compartments.

(a) Sleeping compartments required to be accessible shall be designed so as to allow a person using a wheelchair or mobility aid to enter, maneuver within and approach and use each element within such compartment. (See Fig. 5.)

(b) Each accessible compartment shall contain a restroom complying with § 1192.123(a) which can be entered directly from such compartment.

(c) Controls and operating mechanisms (e.g., heating and air conditioning controls, lighting controls, call buttons, electrical outlets, etc.) shall be mounted no more than 48 inches, and no less than 15 inches, above the floor and shall have a clear floor area directly in front a minimum of 30 inches by 48 inches. Controls and operating mechanisms shall be operable with one hand and shall not require tight grasping, pinching, or twisting of the wrist.

Subpart G—Over-the-Road Buses and Systems

§ 1192.151 General.

(a) New, used and remanufactured over-the-road buses, to be considered accessible by regulations issued by the Department of Transportation in 49 CFR part 37, shall comply with this subpart.

(b) Over-the-road buses covered by 49 CFR 37.7(c) shall comply with § 1192.23 and this subpart.

§ 1192.153 Doors, steps and thresholds.

(a) Floor surfaces on aisles, step treads and areas where wheelchair and mobility aid users are to be accommodated shall be slip-resistant.

(b) All step edges shall have a band of color(s) running the full width of the step which contrasts from the step tread and riser, either dark-on-light or light-on-dark.

(c)(1) Doors shall have a minimum clear width when open of 30 inches (760 mm), measured from the lowest step to a height of at least 48 inches (1220 mm), from which point they may taper to a minimum width of 18 inches (457 mm). The clear width may be reduced by a maximum of 4 inches (100 mm) by protrusions of hinges or other operating mechanisms.

(2) *Exception*. Where compliance with the door width requirement of paragraph (c)(1) of this section is not feasible, the minimum door width shall be 27 in (685 mm).

(d) The overhead clearance between the top of the lift door opening and the sill shall be the maximum practicable but not less than 65 inches (1651 mm).

[56 FR 45558, Sept. 6, 1991, as amended at 63 FR 51698, 51702, Sept. 28, 1998]

§ 1192.155 Interior circulation, handrails and stanchions.

(a) Handrails and stanchions shall be provided in the entrance to the vehicle in a configuration which allows passengers to grasp such assists from outside the vehicle while starting to board, and to continue using such handrails or stanchions throughout the boarding process. Handrails shall have a cross-sectional diameter between 1¼ inches and 1½ inches or shall provide an equivalent grasping surface, and have eased edges with corner radii of not less than ⅛ inch. Handrails shall be placed to provide a minimum 1½ inches knuckle clearance from the nearest adjacent surface. Where on-board fare collection devices are used, a horizontal passenger assist shall be located between boarding passengers and the fare collection device and shall prevent passengers from sustaining injuries on the fare collection device or windshield in the event of a sudden deceleration. Without restricting the vestibule space, the assist shall provide support for a boarding passenger from the door through the boarding procedure. Passengers shall be able to lean against the assist for security while paying fares.

(b) Where provided within passenger compartments, handrails or stanchions shall be sufficient to permit safe on-board circulation, seating and standing assistance, and alighting by persons with disabilities.

§ 1192.157 Lighting.

(a) Any stepwell or doorway immediately adjacent to the driver shall have, when the door is open, at least 2 foot-candles of illumination measured on the step tread.

(b) The vehicle doorway shall have outside light(s) which, when the door is open, provide at least 1 foot-candle of illumination on the pathway to the door for a distance of 3 feet (915 mm) to the bottom step tread or lift outer edge. Such light(s) shall be shielded to protect the eyes of entering and exiting passengers.

[56 FR 45558, Sept. 6, 1991, as amended at 63 FR 51698, 51702, Sept. 28, 1998]

§ 1192.159 Mobility aid accessibility.

(a)(1) *General.* All vehicles covered by this subpart shall provide a level-change mechanism or boarding device (e.g., lift or ramp) complying with paragraph (b) or (c) of this section and sufficient clearances to permit a wheelchair or other mobility aid user to reach a securement location. At least two securement locations and devices, complying with paragraph (d) of this section, shall be provided.

(2) *Exception.* If portable or station-based lifts, ramps or bridge plates meeting the applicable requirements of this section are provided at stations or other stops required to be accessible under regulations issued by the Department of Transportation, the bus is not required to be equipped with a vehicle-borne device.

(b) *Vehicle lift*—(1) *Design load.* The design load of the lift shall be at least 600 pounds (2665 N). Working parts, such as cables, pulleys, and shafts, which can be expected to wear, and upon which the lift depends for support of the load, shall have a safety factor of at least six, based on the ultimate strength of the material. Nonworking parts, such as platform, frame and attachment hardware which would not be expected to wear, shall have a safety factor of at least three, based on the ultimate strength of the material.

(2) *Controls*—(i) *Requirements.* The controls shall be interlocked with the vehicle brakes, transmission, or door, or shall provide other appropriate mechanisms or systems, to ensure that the vehicle cannot be moved when the lift is not stowed and so the lift cannot be deployed unless the interlocks or systems are engaged. The lift shall deploy to all levels (i.e., ground, curb, and intermediate positions) normally encountered in the operating environment. Where provided, each control for deploying, lowering, raising, and stowing the lift and lowering the roll-off barrier shall be of a momentary contact type requiring continuous manual pressure by the operator and shall not allow improper lift sequencing when the lift platform is occupied. The controls shall allow reversal of the lift operation sequence, such as raising or lowering a platform that is part way down, without allowing an occupied platform to fold or retract into the stowed position.

(ii) *Exception.* Where the lift is designed to deploy with its long dimension parallel to the vehicle axis and which pivots into or out of the vehicle while occupied (i.e., ''rotary lift''), the requirements of this paragraph (b)(2) prohibiting the lift from being stowed while occupied shall not apply if the stowed position is within the passenger compartment and the lift is intended to be stowed while occupied.

(3) *Emergency operation.* The lift shall incorporate an emergency method of deploying, lowering to ground level with a lift occupant, and raising and stowing the empty lift if the power to the lift fails. No emergency method, manual or otherwise, shall be capable of being operated in a manner that could be hazardous to the lift occupant or to the operator when operated according to manufacturer's instructions, and shall not permit the platform to be stowed or folded when occupied, unless the lift is a rotary lift and is intended to be stowed while occupied.

(4) *Power or equipment failure.* Platforms stowed in a vertical position, and deployed platforms when occupied, shall have provisions to prevent their deploying, falling, or folding any faster than 12 inches/second (305 mm/sec) or their dropping of an occupant in the event of a single failure of any load carrying component.

(5) *Platform barriers.* The lift platform shall be equipped with barriers to prevent any of the wheels of a wheelchair or mobility aid from rolling off the platform during its operation. A movable barrier or inherent design feature shall prevent a wheelchair or mobility aid from rolling off the edge closest to the vehicle until the platform is in its fully raised position. Each side of the

lift platform which extends beyond the vehicle in its raised position shall have a barrier a minimum 1½ inches (13 mm) high. Such barriers shall not interfere with maneuvering into or out of the aisle. The loading-edge barrier (outer barrier) which functions as a loading ramp when the lift is at ground level, shall be sufficient when raised or closed, or a supplementary system shall be provided, to prevent a power wheelchair or mobility aid from riding over or defeating it. The outer barrier of the lift shall automatically raise or close, or a supplementary system shall automatically engage, and remain raised, closed, or engaged at all times that the platform is more than 3 inches (75 mm) above the roadway or sidewalk and the platform is occupied. Alternatively, a barrier or system may be raised, lowered, opened, closed, engaged, or disengaged by the lift operator, provided an interlock or inherent design feature prevents the lift from rising unless the barrier is raised or closed or the supplementary system is engaged.

(6) *Platform surface*. The platform surface shall be free of any protrusions of ¼ inch (6.5 mm) high and shall be slip resistant. The platform shall have a minimum clear width of 28½ inches (725 mm) at the platform, a minimum clear width of 30 inches (760 mm) measured from 2 inches (50 mm) above the platform surface to 30 inches (760 mm) above the platform, and a minimum clear length of 48 inches (1220 mm) measured from 2 inches (50 mm) above the surface of the platform to 30 inches (760 mm) above the surface of the platform. (See Figure 1 to this part.)

(7) *Platform gaps*. Any openings between the platform surface and the raised barriers shall not exceed ⅝ inch (16 mm) in width. When the platform is at vehicle floor height with the inner barrier (if applicable) down or retracted, gaps between the forward lift platform edge and the vehicle floor shall not exceed ½ inch (13 mm) horizontally and ⅝ inch (16 mm) vertically. Platforms on semi-automatic lifts may have a hand hold not exceeding 1½ inches (28 mm) by 4½ inches (113 mm) located between the edge barriers.

(8) *Platform entrance ramp*. The entrance ramp, or loading-edge barrier used as a ramp, shall not exceed a slope of 1:8, measured on level ground, for a maximum rise of 3 inches (75 mm), and the transition from roadway or sidewalk to ramp may be vertical without edge treatment up to ¼ inch (6.5 mm) . Thresholds between ¼ inch (6.5 mm) and ½ inch (13 mm) high shall be beveled with a slope no greater than 1:2.

(9) *Platform deflection*. The lift platform (not including the entrance ramp) shall not deflect more than 3 degrees (exclusive of vehicle roll or pitch) in any direction between its unloaded position and its position when loaded with 600 pounds (2665 N) applied through a 26 inch (660 mm) by 26 inch test pallet at the centroid of the platform.

(10) *Platform movement*. No part of the platform shall move at a rate exceeding 6 inches/second (150 mm/sec) during lowering and lifting an occupant, and shall not exceed 12 inches/second (300 mm/sec) during deploying or stowing. This requirement does not apply to the deployment or stowage cycles of lifts that are manually deployed or stowed. The maximum platform horizontal and vertical acceleration when occupied shall be 0.3g.

(11) *Boarding direction*. The lift shall permit both inboard and outboard facing of wheelchair and mobility aid users.

(12) *Use by standees*. Lifts shall accommodate persons using walkers, crutches, canes or braces or who otherwise have difficulty using steps. The platform may be marked to indicate a preferred standing position.

(13) *Handrails*. Platforms on lifts shall be equipped with handrails on two sides, which move in tandem with the lift, and which shall be graspable and provide support to standees throughout the entire lift operation. Handrails shall have a usable component at least 8 inches (200 mm) long with the lowest portion a minimum 30 inches (760 mm) above the platform and the highest portion a maximum 38 inches (965 mm) above the platform. The handrails shall be capable of withstanding a force of 100 pounds (445 N) concentrated at any point on the handrail without permanent deformation of the rail or its supporting structure. The handrail shall

have a cross-sectional diameter between 1¼ inches (32 mm) and 1½ inches (38 mm) or shall provide an equivalent grasping surface, and have eased edges with corner radii of not less than ⅝ inch (3.5 mm). Handrails shall be placed to provide a minimum 1½ inches (38 mm) knuckle clearance from the nearest adjacent surface. Handrails shall not interfere with wheelchair or mobility aid maneuverability when entering or leaving the vehicle.

(c) *Vehicle ramp*—(1) *Design load*. Ramps 30 inches (760 mm) or longer shall support a load of 600 pounds (2665 N), placed at the centroid of the ramp distributed over an area of 26 inches by 26 inches (660 mm by 660 mm), with a safety factor of at least 3 based on the ultimate strength of the material. Ramps shorter than 30 inches (760 mm) shall support a load of 300 pounds (1332 N).

(2) *Ramp surface*. The ramp surface shall be continuous and slip resistant; shall not have protrusions from the surface greater than ¼ inch (6.5 mm) high; shall have a clear width of 30 inches (760 mm); and shall accommodate both four-wheel and three-wheel mobility aids.

(3) *Ramp threshold*. The transition from roadway or sidewalk and the transition from vehicle floor to the ramp may be vertical without edge treatment up to ¼ inch (6.5 mm). Changes in level between ¼ inch (6.5 mm) and ½ inch (13 mm) shall be beveled with a slope no greater than 1:2.

(4) *Ramp barriers*. Each side of the ramp shall have barriers at least 2 inches (50 mm) high to prevent mobility aid wheels from slipping off.

(5) *Slope*. Ramps shall have the least slope practicable and shall not exceed 1:4 when deployed to ground level. If the height of the vehicle floor from which the ramp is deployed is 3 inches (75 mm) or less above a 6 inch (150 mm) curb, a maximum slope of 1:4 is permitted; if the height of the vehicle floor from which the ramp is deployed is 6 inches (150 mm) or less, but greater than 3 inches (75 mm), above a 6 inch (150 mm) curb, a maximum slope of 1:6 is permitted; if the height of the vehicle floor from which the ramp is deployed is 9 inches (225 mm) or less, but greater than 6 inches (150 mm), above a 6 inch curb, a maximum slope of 1:8 is permitted; if the height of the vehicle floor from which the ramp is deployed is greater than 9 inches (225 mm) above a 6 inch (150 mm) curb, a slope of 1:12 shall be achieved. Folding or telescoping ramps are permitted provided they meet all structural requirements of this section.

(6) *Attachment*. When in use for boarding or alighting, the ramp shall be firmly attached to the vehicle so that it is not subject to displacement when loading or unloading a heavy power mobility aid and that no gap between vehicle and ramp exceeds ⅝ inch (16 mm).

(7) *Stowage*. A compartment, securement system, or other appropriate method shall be provided to ensure that stowed ramps, including portable ramps stowed in the passenger area, do not impinge on a passenger's wheelchair or mobility aid or pose any hazard to passengers in the event of a sudden stop or maneuver.

(8) *Handrails*. If provided, handrails shall allow persons with disabilities to grasp them from outside the vehicle while starting to board, and to continue to use them throughout the boarding process, and shall have the top between 30 inches (760 mm) above the ramp surface. The handrails shall be capable of withstanding a force of 100 pounds (445 N) concentrated at any point on the handrail without permanent deformation of the rail or its supporting structure. The handrail shall have a cross-sectional diameter between 1¼ inches (32 mm) and 1½ inches (38 mm) or shall provide an equivalent grasping surface, and have eased edges with corner radii of not less than ⅛ inch (3.5 mm). Handrails shall not interfere with wheelchair or mobility aid maneuverability when entering or leaving the vehicle.

(d) *Securement devices*—(1) *Design load*. Securement systems, and their attachments to vehicles, shall restrain a force in the forward longitudinal direction of up to 2,000 pounds (8,880 N) per securement leg or clamping mechanism and a minimum of 4,000 pounds (17,760 N) for each mobility aid.

(2) *Location and size*. The securement system shall be placed as near to the accessible entrance as practicable and

shall have a clear floor area of 30 inches (760 mm) by 48 inches (1220 mm). Such space shall adjoin, and may overlap, an access path. Not more than 6 inches (150 mm) of the required clear floor space may be accommodated for footrests under another seat, modesty panel, or other fixed element provided there is a minimum of 9 inches (230 mm) from the floor to the lowest part of the seat overhanging the space. Securement areas may have fold-down seats to accommodate other passengers when a wheelchair or mobility aid is not occupying the area, provided the seats, when folded up, do not obstruct the clear floor space required. (See Figure 2 to this part.)

(3) *Mobility aids accommodated*. The securement system shall secure common wheelchairs and mobility aids and shall either be automatic or easily attached by a person familiar with the system and mobility aid and having average dexterity.

(4) *Orientation*. At least one securement device or system required by paragraph (a) of this section shall secure the wheelchair or mobility aid facing toward the front of the vehicle. Additional securement devices or systems shall secure the wheelchair or mobility aid facing forward or rearward. Where the wheelchair or mobility aid is secured facing the rear of the vehicle, a padded barrier shall be provided. The padded barrier shall extend from a height of 38 inches (965 mm) from the vehicle floor to a height of 56 inches (1420 mm) from the vehicle floor with a width of 18 inches (455 mm), laterally centered immediately in back of the seated individual. Such barriers need not be solid provided equivalent protection is afforded.

(5) *Movement*. When the wheelchair or mobility aid is secured in accordance with manufacturer's instructions, the securement system shall limit the movement of an occupied wheelchair or mobility aid to no more than 2 inches (50 mm) in any direction under normal vehicle operating conditions.

(6) *Stowage*. When not being used for securement, or when the securement area can be used by standees, the securement system shall not interfere with passenger movement, shall not present any hazardous condition, shall be reasonably protected from vandalism, and shall be readily accessed when needed for use.

(7) *Seat belt and shoulder harness*. For each wheelchair or mobility aid securement device provided, a passenger seat belt and shoulder harness, complying with all applicable provisions of the Federal Motor Vehicle Safety Standards (49 CFR part 571), shall also be provided for use by wheelchair or mobility aid users. Such seat belts and shoulder harnesses shall not be used in lieu of a device which secures the wheelchair or mobility aid itself.

[63 FR 51698, 51702, Sept. 28, 1998]

§ 1192.161 Moveable aisle armrests.

A minimum of 50% of aisle seats, including all moveable or removable seats at wheelchair or mobility aide securement locations, shall have an armrest on the aisle side which can be raised, removed, or retracted to permit easy entry or exit.

[63 FR 51700, 51702, Sept. 28, 1998]

Subpart H—Other Vehicles and Systems

§ 1192.171 General.

(a) New, used and remanufactured vehicles and conveyances for systems not covered by other subparts of this part, to be considered accessible by regulations issued by the Department of Transportation in 49 CFR part 37, shall comply with this subpart.

(b) If portions of the vehicle or conveyance are modified in a way that affects or could affect accessibility, each such portion shall comply, to the extent practicable, with the applicable provisions of this subpart. This provision does not require that inaccessible vehicles be retrofitted with lifts, ramps or other boarding devices.

(c) Requirements for vehicles and systems not covered by this part shall be determined on a case-by-case basis by the Department of Transportation in consultation with the U.S. Architectural and Transportation Barriers Compliance Board (Access Board).

§ 1192.173 Automated guideway transit vehicles and systems.

(a) Automated Guideway Transit (AGT) vehicles and systems, sometimes called ''people movers'', operated in airports and other areas where AGT vehicles travel at slow speed, shall comply with the provisions of §§ 1192.53 (a) through (c), and 1192.55 through 1192.61 for rapid rail vehicles and systems.

(b) Where the vehicle covered by paragraph (a) of this section will operate in an accessible station, the design of vehicles shall be coordinated with the boarding platform design such that the horizontal gap between a vehicle door at rest and the platform shall be no greater than 1 inch and the height of the vehicle floor shall be within plus or minus ½ inch of the platform height under all normal passenger load conditions. Vertical alignment may be accomplished by vehicle air suspension or other suitable means of meeting the requirement.

(c) In stations where open platforms are not protected by platform screens, a suitable device or system shall be provided to prevent, deter or warn individuals from stepping off the platform between cars. Acceptable devices include, but are not limited to, pantograph gates, chains, motion detectors or other appropriate devices.

(d) Light rail and rapid rail AGT vehicles and systems shall comply with subparts D and C of this part, respectively.

§ 1192.175 High-speed rail cars, monorails and systems.

(a) All cars for high-speed rail systems, including but not limited to those using ''maglev'' or high speed steel-wheel-on-steel-rail technology, and monorail systems operating primarily on dedicated rail (i.e., not used by freight trains) or guideway, in which stations are constructed in accordance with subpart C of 49 CFR part 37, shall be designed for high-platform, level boarding and shall comply with § 1192.111(a) for each type of car which is similar to intercity rail, §§ 1192.111(d), 1192.113 (a) through (c) and (e), 1192.115 (a) and (b), 1192.117 (a) and (b), 1192.121 through 1192.123, 1192.125(d), and 1192.127 (if applicable). The design of cars shall be coordinated with the boarding platform design such that the horizontal gap between a car door at rest and the platform shall be no greater than 3 inches and the height of the car floor shall be within plus or minus ⅝ inch of the platform height under all normal passenger load conditions. Vertical alignment may be accomplished by car air suspension or other suitable means of meeting the requirement. All doorways shall have, when the door is open, at least 2 footcandles of illumination measured on the door threshold.

(b) All other high-speed rail cars shall comply with the similar provisions of subpart F of this part.

§ 1192.177 Ferries, excursion boats and other vessels. [Reserved]

§ 1192.179 Trams, similar vehicles and systems.

(a) New and used trams consisting of a tractor unit, with or without passenger accommodations, and one or more passenger trailer units, including but not limited to vehicles providing shuttle service to remote parking areas, between hotels and other public accommodations, and between and within amusement parks and other recreation areas, shall comply with this section. For purposes of determining applicability of 49 CFR 37.101, 37.103, or 37.105, the capacity of such a vehicle or ''train'' shall consist of the total combined seating capacity of all units, plus the driver, prior to any modification for accessibility.

(b) Each tractor unit which accommodates passengers and each trailer unit shall comply with §§ 1192.25 and 1192.29. In addition, each such unit shall comply with § 1192.23 (b) or (c) and shall provide at least one space for wheelchair or mobility aid users complying with § 1192.23(d) unless the complete operating unit consisting of tractor and one or more trailers can already accommodate at least two wheelchair or mobility aid users.

FIGURES TO PART 1192

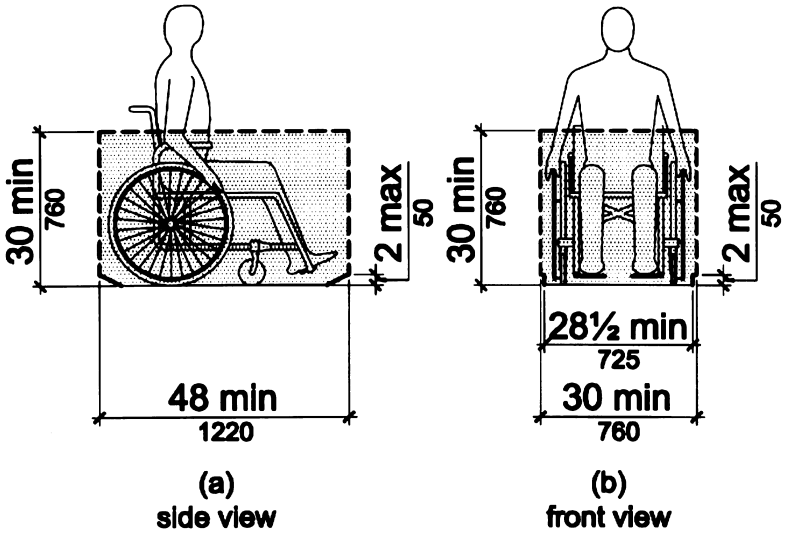

Figure 1
Wheelchair or Mobility Aid Envelope

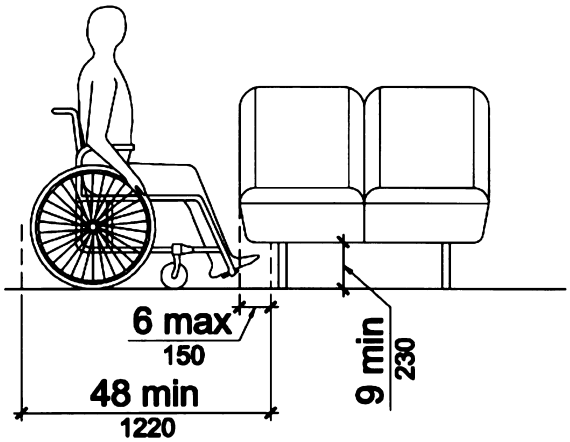

Figure 2
Toe Clearance Under a Fixed Element

[63 FR 51701, 51702, Sept. 28, 1998]

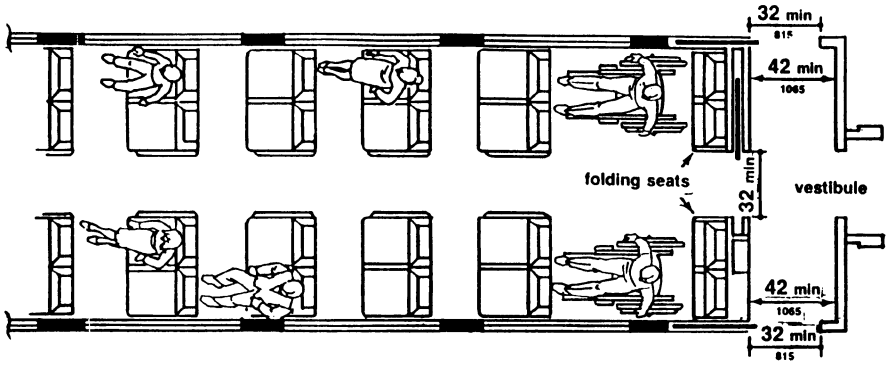

Fig. 3
Commuter Rail Car (without restrooms)

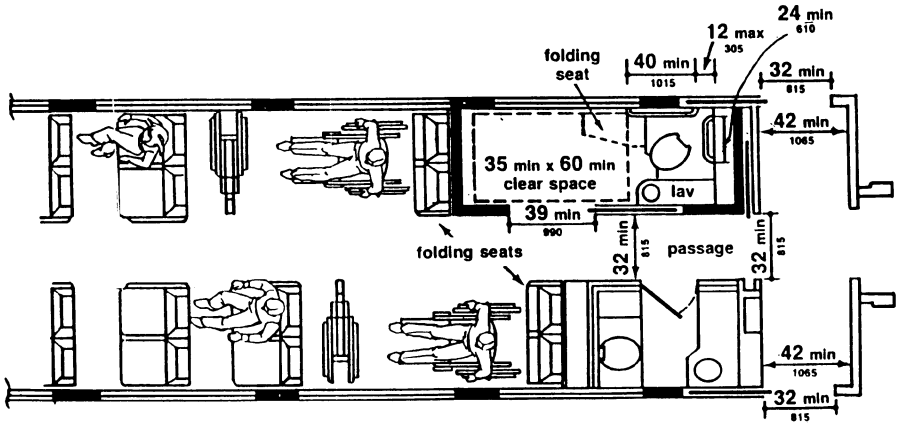

Fig. 4
Intercity Rail Car (with accessible restroom)

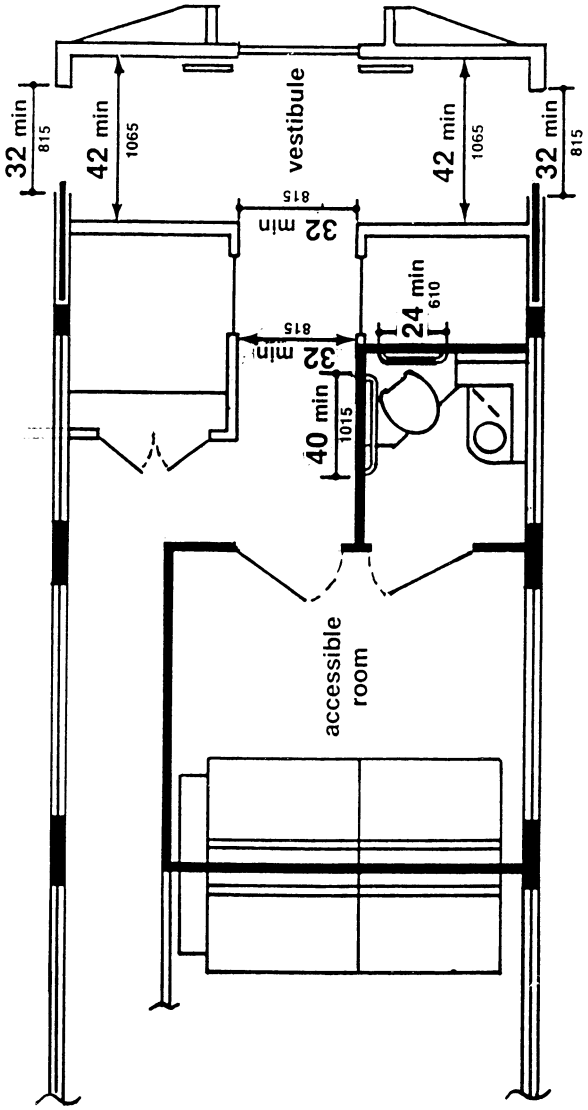

Fig. 5
Intercity Rail Car (with accessible sleeping compartment)

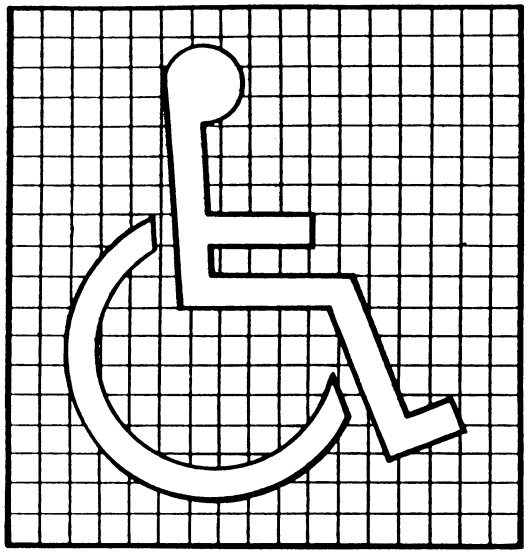

(a)
Proportions

(b)
Display Conditions

Fig. 6
International Symbol of Accessibility

APPENDIX TO PART 1192—ADVISORY GUIDANCE

This appendix contains materials of an advisory nature and provides additional information that should help the reader to understand the minimum requirements of the guidelines or to design vehicles for greater accessibility. Each entry is applicable to all subparts of this part except where noted. Nothing in this appendix shall in any way obviate any obligation to comply with the requirements of the guidelines themselves.

I. SLIP RESISTANT SURFACES—AISLES, STEPS, FLOOR AREAS WHERE PEOPLE WALK, FLOOR AREAS IN SECUREMENT LOCATIONS, LIFT PLATFORMS, RAMPS

Slip resistance is based on the frictional force necessary to keep a shoe heel or crutch tip from slipping on a walking surface under conditions likely to be found on the surface. While the dynamic coefficient of friction during walking varies in a complex and nonuniform way, the static coefficient of friction, which can be measured in several ways, provides a close approximation of the slip resistance of a surface. Contrary to popular belief, some slippage is necessary to walking, especially for persons with restricted gaits; a

truly ''non-slip'' surface could not be negotiated.

The Occupational Safety and Health Administration recommends that walking surfaces have a static coefficient of friction of 0.5. A research project sponsored by the Architectural and Transportation Barriers Compliance Board (Access Board) conducted tests with persons with disabilities and concluded that a higher coefficient of friction was needed by such persons. A static coefficient of friction of 0.6 is recommended for steps, floors, and lift platforms and 0.8 for ramps.

The coefficient of friction varies considerably due to the presence of contaminants, water, floor finishes, and other factors not under the control of transit providers and may be difficult to measure. Nevertheless, many common materials suitable for flooring are now labeled with information on the static coefficient of friction. While it may not be possible to compare one product directly with another, or to guarantee a constant measure, transit operators or vehicle designers and manufacturers are encouraged to specify materials with appropriate values. As more products include information on slip resistance, improved uniformity in measurement and specification is likely. The Access Board's advisory guidelines on Slip Resistant Surfaces provides additional information on this subject.

II. Color Contrast—Step Edges, Lift Platform Edges

The material used to provide contrast should contrast by at least 70%. Contrast in percent is determined by:

$$\text{Contrast}=[(B_1-B_2)/B_1]\times 100$$

where B_1=light reflectance value (LRV) of the lighter area

and B_2=light reflectance value (LRV) of the darker area.

Note that in any application both white and black are never absolute; thus, B_1 never equals 100 and B_2 is always greater than 0.

III. Handrails and Stanchions

In addition to the requirements for handrails and stanchions for rapid, light, and commuter rail vehicles, consideration should be given to the proximity of handrails or stanchions to the area in which wheelchair or mobility aid users may position themselves. When identifying the clear floor space where a wheelchair or mobility aid user can be accommodated, it is suggested that at least one such area be adjacent or in close proximity to a handrail or stanchion. Of course, such a handrail or stanchion cannot encroach upon the required 32 inch width required for the doorway or the route leading to the clear floor space which must be at least 30 by 48 inches in size.

IV. Priority Seating Signs and Other Signage

A. Finish and Contrast

The characters and background of signs should be eggshell, matte, or other non-glare finish. An eggshell finish (11 to 19 degree gloss on 60 degree glossimeter) is recommended. Characters and symbols should contrast with their background—either light characters on a dark background or dark characters on a light background. Research indicates that signs are more legible for persons with low vision when characters contrast with their background by at least 70 percent. Contrast in percent is determined by:

$$\text{Contrast}=[(B_1-B_2)/B_1]\times 100$$

where B_1=light reflectance value (LRV) of the lighter area

and B_2=light reflectance value (LRV) of the darker area.

Note that in any application both white and black are never absolute; thus, B_1 never equals 100 and B_2 is always greater than 0.

The greatest readability is usually achieved through the use of light-colored characters or symbols on a dark background.

B. Destination and Route Signs

The following specifications, which are required for buses (§1192.39), are recommended for other types of vehicles, particularly light rail vehicles, where appropriate.

1. Where destination or route information is displayed on the exterior of a vehicle, each vehicle should have illuminated signs on the front and boarding side of the vehicle.

2. Characters on signs covered by paragraph IV.B.1 of this appendix should have a width-to-height ratio between 3:5 and 1:1 and a stroke width-to-height ratio between 1:5 and 1:10, with a minimum character height (using an upper case ''X'') of 1 inch for signs on the boarding side and a minimum character height of 2 inches for front ''headsigns'', with ''wide'' spacing (generally, the space between letters shall be 1/16 the height of upper case letters), and should contrast with the background, either dark-on-light or light-on-dark, or as recommended above.

C. Designation of Accessible Vehicles

The International Symbol of Accessibility should be displayed as shown in Figure 6.

V. Public Information Systems

There is currently no requirement that vehicles be equipped with an information system which is capable of providing the same or equivalent information to persons with hearing loss. While the Department of Transportation assesses available and soon-to-be

available technology during a study to be conducted during Fiscal Year 1992, entities are encouraged to employ whatever services, signage or alternative systems or devices that provide equivalent access and are available. Two possible types of devices are visual display systems and listening systems. However, it should be noted that while visual display systems accommodate persons who are deaf or are hearing impaired, assistive listening systems aid only those with a partial loss of hearing.

A. Visual Display Systems

Announcements may be provided in a visual format by the use of electronic message boards or video monitors.

Electronic message boards using a light emitting diode (LED) or ''flip-dot'' display are currently provided in some transit stations and terminals and may be usable in vehicles. These devices may be used to provide real time or pre-programmed messages; however, real time message displays require the availability of an employee for keyboard entry of the information to be announced.

Video monitor systems, such as visual paging systems provided in some airports (e.g., Baltimore-Washington International Airport), are another alternative. The Architectural and Transportation Barriers Compliance Board (Access Board) can provide technical assistance and information on these systems (''Airport TDD Access: Two Case Studies,'' (1990)).

B. Assistive Listening Systems

Assistive listening systems (ALS) are intended to augment standard public address and audio systems by providing signals which can be received directly by persons with special receivers or their own hearing aids and which eliminate or filter background noise. Magnetic induction loops, infra-red and radio frequency systems are types of listening systems which are appropriate for various applications.

An assistive listening-system appropriate for transit vehicles, where a group of persons or where the specific individuals are not known in advance, may be different from the system appropriate for a particular individual provided as an auxiliary aid or as part of a reasonable accommodation. The appropriate device for an individual is the type that individual can use, whereas the appropriate system for a station or vehicle will necessarily be geared toward the ''average'' or aggregate needs of various individuals. Earphone jacks with variable volume controls can benefit only people who have slight hearing loss and do not help people who use hearing aids. At the present time, magnetic induction loops are the most feasible type of listening system for people who use hearing aids equipped with ''T-coils'', but people without hearing aids or those with hearing aids not equipped with inductive pick-ups cannot use them without special receivers. Radio frequency systems can be extremely effective and inexpensive. People without hearing aids can use them, but people with hearing aids need a special receiver to use them as they are presently designed. If hearing aids had a jack to allow a by-pass of microphones, then radio frequency systems would be suitable for people with and without hearing aids. Some listening systems may be subject to interference from other equipment and feedback from hearing aids of people who are using the systems. Such interference can be controlled by careful engineering design that anticipates feedback sources in the surrounding area.

The Architectural and Transportation Barriers Compliance Board (Access Board) has published a pamphlet on Assistive Listening Systems which lists demonstration centers across the country where technical assistance can be obtained in selecting and installing appropriate systems. The state of New York has also adopted a detailed technical specification which may be useful.

VI. OVER-THE-ROAD BUSES

A. Door Width

Achieving a 30 inch wide front door on an over-the-road bus is considered not feasible if doing so would necessitate reduction of the bus approach angle, relocating the front axle rearward, or increasing the bus overall length.

B. Restrooms

The following is provided to assist manufacturers and designers to create restrooms which can be used by people with disabilities. These specifications are derived from requirements for rail vehicles and represent compromises between space needed for use and constraints imposed by vehicle dimensions. As a result, some persons with disabilities cannot use a restroom which meets these specifications and operators who do provide such restrooms should provide passengers with disabilities sufficient advance information about design so that those passengers can assess their ability to use them. Designers should provide additional space beyond these minimum specifications whenever possible.

(1) If an accessible restroom is provided, it should be designed so as to allow a person using a wheelchair or mobility aid to enter and use such restroom as specified in paragraphs (1)(a) through (e) of section VI.B of this appendix.

(a) The minimum clear floor area should be 35 inches (890 mm) by 60 inches (1525 mm). Permanently installed fixtures may overlap this area a maximum of 6 inches (150 mm), if

the lowest portion of the fixture is a minimum of 9 inches (230 mm) above the floor, and may overlap a maximum of 19 inches (485 mm), if the lowest portion of the fixture is a minimum of 29 inches (740 mm) above the floor, provided such fixtures do not interfere with access to the water closet. Fold-down or retractable seats or shelves may overlap the clear floor space at a lower height provided they can be easily folded up or moved out of the way.

(b) The height of the water closet should be 17 inches (430 mm) to 19 inches (485 mm) measured to the top of the toilet seat. Seats should not be sprung to return to a lifted position.

(c) A grab bar at least 24 inches (610 mm) long should be mounted behind the water closet, and a horizontal grab bar at least 40 inches (1015 mm) long should be mounted on at least one side wall, with one end not more than 12 inches (305 mm) from the back wall, at a height between 33 inches (840 mm) and 36 inches (915 mm) above the floor.

(d) Faucets and flush controls should be operable with one hand and should not require tight grasping, pinching, or twisting of the wrist. The force required to activate controls should be no greater than 5 lbs (22.2 N). Controls for flush valves should be mounted no more than 44 inches (1120 mm) above the floor.

(e) Doorways on the end of the enclosure, opposite the water closet, should have a minimum clear opening width of 32 inches (815 mm). Door latches and hardware should be operable with one hand and should not require tight grasping, pinching, or twisting of the wrist.

(2) Accessible restrooms should be in close proximity to at least one seating location for persons using mobility aids and should be connected to such a space by an unobstructed path having a minimum width of 32 inches (815 mm).

C. Visibility Through a Window

Care should be taken so that the lift does not obscure the vision of the person occupying the securement position.

[56 FR 45558, Sept. 6, 1991, as amended at 63 FR 51702, Sept. 28, 1998]

PART 1193—TELECOMMUNICATIONS ACT ACCESSIBILITY GUIDELINES

Subpart A—General

Sec.
1193.1 Purpose.
1193.2 Scoping.
1193.3 Definitions.

Subpart B—General Requirements

1193.21 Accessibility, usability, and compatibility.
1193.23 Product design, development, and evaluation.

Subpart C—Requirements for Accessibility and Usability

1193.31 Accessibility and usability.
1193.33 Information, documentation, and training.
1193.35 Redundancy and selectability. [Reserved]
1193.37 Information pass through.
1193.39 Prohibited reduction of accessibility, usability, and compatibility.
1193.41 Input, control, and mechanical functions.
1193.43 Output, display, and control functions.

Subpart D—Requirements for Compatibility With Peripheral Devices and Specialized Customer Premises Equipment

1193.51 Compatibility.
APPENDIX TO PART 1193—ADVISORY GUIDANCE

AUTHORITY: 47 U.S.C. 255(e).

SOURCE: 63 FR 5630, Feb. 3, 1998, unless otherwise noted.

Subpart A—General

§ 1193.1 Purpose.

This part provides requirements for accessibility, usability, and compatibility of telecommunications equipment and customer premises equipment covered by the Telecommunications Act of 1996 (47 U.S.C. 255).

§ 1193.2 Scoping.

This part provides requirements for accessibility, usability, and compatibility of new products and existing products which undergo substantial change or upgrade, or for which new releases are distributed. This part does not apply to minor or insubstantial changes to existing products that do not affect functionality.

§ 1193.3 Definitions.

Terms used in this part shall have the specified meaning unless otherwise stated. Words, terms and phrases used in the singular include the plural, and use of the plural includes the singular.

Accessible. Telecommunications equipment or customer premises equipment which comply with the requirements of subpart C of this part.

Alternate formats. Alternate formats may include, but are not limited to, Braille, ASCII text, large print, and audio cassette recording.

Alternate modes. Different means of providing information to users of products including product documentation and information about the status or operation of controls. Examples of alternate modes may include, but are not limited to, voice, fax, relay service, TTY, Internet posting, captioning, text-to-speech synthesis, and video description.

Compatible. Telecommunications equipment or customer premises equipment which comply with the requirements of subpart D of this part.

Customer premises equipment. Equipment employed on the premises of a person (other than a carrier) to originate, route, or terminate telecommunications.

Manufacturer. A manufacturer of telecommunications equipment or customer premises equipment that sells to the public or to vendors that sell to the public; a final assembler.

Peripheral devices. Devices employed in connection with telecommunications equipment or customer premises equipment to translate, enhance, or otherwise transform telecommunications into a form accessible to individuals with disabilities.

Product. Telecommunications equipment or customer premises equipment.

Readily achievable. Easily accomplishable and able to be carried out without much difficulty or expense.

Specialized customer premises equipment. Equipment, employed on the premises of a person (other than a carrier) to originate, route, or terminate telecommunications, which is commonly used by individuals with disabilities to achieve access.

Telecommunications. The transmission, between or among points specified by the user, of information of the user's choosing, without change in the form or content of the information as sent and received.

Telecommunications equipment. Equipment, other than customer premises equipment, used by a carrier to provide telecommunications services, and includes software integral to such equipment (including upgrades).

Telecommunications service. The offering of telecommunications for a fee directly to the public, or to such classes of users as to be effectively available directly to the public, regardless of the facilities used.

TTY. An abbreviation for teletypewriter. Machinery or equipment that employs interactive text based communications through the transmission of coded signals across the standard telephone network. TTYs can include, for example, devices known as TDDs (telecommunication display devices or telecommunication devices for deaf persons) or computers with special modems. TTYs are also called text telephones.

Usable. Means that individuals with disabilities have access to the full functionality and documentation for the product, including instructions, product information (including accessible feature information), documentation, and technical support functionally equivalent to that provided to individuals without disabilities.

Subpart B—General Requirements

§ 1193.21 Accessibility, usability, and compatibility.

Where readily achievable, telecommunications equipment and customer premises equipment shall comply with the requirements of subpart C of this part. Where it is not readily achievable to comply with subpart C of this part, telecommunications equipment and customer premises equipment shall comply with the requirements of subpart D of this part, if readily achievable.

§ 1193.23 Product design, development, and evaluation.

(a) Manufacturers shall evaluate the accessibility, usability, and compatibility of telecommunications equipment and customer premises equipment and shall incorporate such evaluation throughout product design, development, and fabrication, as early

and consistently as possible. Manufacturers shall identify barriers to accessibility and usability as part of such a product design and development process.

(b) In developing such a process, manufacturers shall consider the following factors, as the manufacturer deems appropriate:

(1) Where market research is undertaken, including individuals with disabilities in target populations of such research;

(2) Where product design, testing, pilot demonstrations, and product trials are conducted, including individuals with disabilities in such activities;

(3) Working cooperatively with appropriate disability-related organizations; and

(4) Making reasonable efforts to validate any unproven access solutions through testing with individuals with disabilities or with appropriate disability-related organizations that have established expertise with individuals with disabilities.

Subpart C—Requirements for Accessibility and Usability

§ 1193.31 Accessibility and usability.

When required by § 1193.21, telecommunications equipment and customer premises equipment shall be accessible to and usable by individuals with disabilities and shall comply with §§ 1193.33 through 1193.43 as applicable.

§ 1193.33 Information, documentation, and training.

(a) Manufacturers shall ensure access to information and documentation it provides to its customers. Such information and documentation includes user guides, installation guides for end-user installable devices, and product support communications, regarding both the product in general and the accessibility features of the product. Manufacturers shall take such other steps as necessary including:

(1) Providing a description of the accessibility and compatibility features of the product upon request, including, as needed, in alternate formats or alternate modes at no additional charge;

(2) Providing end-user product documentation in alternate formats or alternate modes upon request at no additional charge; and

(3) Ensuring usable customer support and technical support in the call centers and service centers which support their products at no additional charge.

(b) Manufacturers shall include in general product information the contact method for obtaining the information required by paragraph (a) of this section.

(c) Where manufacturers provide employee training, they shall ensure it is appropriate to an employee's function. In developing, or incorporating existing training programs, consideration shall be given to the following factors:

(1) Accessibility requirements of individuals with disabilities;

(2) Means of communicating with individuals with disabilities;

(3) Commonly used adaptive technology used with the manufacturer's products;

(4) Designing for accessibility; and

(5) Solutions for accessibility and compatibility.

§ 1193.35 Redundancy and selectability. [Reserved]

§ 1193.37 Information pass through.

Telecommunications equipment and customer premises equipment shall pass through cross-manufacturer, nonproprietary, industry-standard codes, translation protocols, formats or other information necessary to provide telecommunications in an accessible format. In particular, signal compression technologies shall not remove information needed for access or shall restore it upon decompression.

§ 1193.39 Prohibited reduction of accessibility, usability, and compatibility.

(a) No change shall be undertaken which decreases or has the effect of decreasing the net accessibility, usability, or compatibility of telecommunications equipment or customer premises equipment.

(b) Exception: Discontinuation of a product shall not be prohibited.

§ 1193.41 Input, control, and mechanical functions.

Input, control, and mechanical functions shall be locatable, identifiable,

and operable in accordance with each of the following, assessed independently:

(a) *Operable without vision*. Provide at least one mode that does not require user vision.

(b) *Operable with low vision and limited or no hearing*. Provide at least one mode that permits operation by users with visual acuity between 20/70 and 20/200, without relying on audio output.

(c) *Operable with little or no color perception*. Provide at least one mode that does not require user color perception.

(d) *Operable without hearing*. Provide at least one mode that does not require user auditory perception.

(e) *Operable with limited manual dexterity*. Provide at least one mode that does not require user fine motor control or simultaneous actions.

(f) *Operable with limited reach and strength*. Provide at least one mode that is operable with user limited reach and strength.

(g) *Operable without time-dependent controls*. Provide at least one mode that does not require a response time. Alternatively, a response time may be required if it can be by-passed or adjusted by the user over a wide range.

(h) *Operable without speech*. Provide at least one mode that does not require user speech.

(i) *Operable with limited cognitive skills*. Provide at least one mode that minimizes the cognitive, memory, language, and learning skills required of the user.

§ 1193.43 Output, display, and control functions.

All information necessary to operate and use the product, including but not limited to, text, static or dynamic images, icons, labels, sounds, or incidental operating cues, shall comply with each of the following, assessed independently:

(a) *Availability of visual information*. Provide visual information through at least one mode in auditory form.

(b) *Availability of visual information for low vision users*. Provide visual information through at least one mode to users with visual acuity between 20/70 and 20/200 without relying on audio.

(c) *Access to moving text*. Provide moving text in at least one static presentation mode at the option of the user.

(d) *Availability of auditory information*. Provide auditory information through at least one mode in visual form and, where appropriate, in tactile form.

(e) *Availability of auditory information for people who are hard of hearing*. Provide audio or acoustic information, including any auditory feedback tones that are important for the use of the product, through at least one mode in enhanced auditory fashion (i.e., increased amplification, increased signal-to-noise ratio, or combination). For transmitted voice signals, provide a gain adjustable up to a minimum of 20 dB. For incremental volume control, provide at least one intermediate step of 12 dB of gain.

(f) *Prevention of visually-induced seizures*. Visual displays and indicators shall minimize visual flicker that might induce seizures in people with photosensitive epilepsy.

(g) *Availability of audio cutoff*. Where a product delivers audio output through an external speaker, provide an industry standard connector for headphones or personal listening devices (e.g., phone-like handset or earcup) which cuts off the speaker(s) when used.

(h) *Non-interference with hearing technologies*. Reduce interference to hearing technologies (including hearing aids, cochlear implants, and assistive listening devices) to the lowest possible level that allows a user to utilize the product.

(i) *Hearing aid coupling*. Where a product delivers output by an audio transducer which is normally held up to the ear, provide a means for effective wireless coupling to hearing aids.

Subpart D—Requirements for Compatibility With Peripheral Devices and Specialized Customer Premises Equipment

§ 1193.51 Compatibility.

When required by subpart B of this part, telecommunications equipment and customer premises equipment shall be compatible with peripheral devices and specialized customer premises

equipment commonly used by individuals with disabilities to achieve accessibility, and shall comply with the following provisions, as applicable:

(a) *External electronic access to all information and control mechanisms.* Information needed for the operation of products (including output, alerts, icons, on-line help, and documentation) shall be available in a standard electronic text format on a cross-industry standard port and all input to and control of a product shall allow for real time operation by electronic text input into a cross-industry standard external port and in cross-industry standard format. The cross-industry standard port shall not require manipulation of a connector by the user.

(b) *Connection point for external audio processing devices.* Products providing auditory output shall provide the auditory signal at a standard signal level through an industry standard connector.

(c) *Compatibility of controls with prosthetics.* Touchscreen and touch-operated controls shall be operable without requiring body contact or close body proximity.

(d) *TTY connectability.* Products which provide a function allowing voice communication and which do not themselves provide a TTY functionality shall provide a standard non-acoustic connection point for TTYs. It shall also be possible for the user to easily turn any microphone on and off to allow the user to intermix speech with TTY use.

(e) *TTY signal compatibility.* Products, including those providing voice communication functionality, shall support use of all cross-manufacturer non-proprietary standard signals used by TTYs.

APPENDIX TO PART 1193—ADVISORY GUIDANCE

INTRODUCTION

1. This appendix provides examples of strategies and notes to assist in understanding the guidelines and are a source of ideas for alternate strategies for achieving accessibility. These strategies and notes are not mandatory. A manufacturer is not required to incorporate all of these examples or any specific example. Manufacturers are free to use these or other strategies in addressing the guidelines. The examples listed here are not comprehensive, nor does adopting or incorporating them guarantee an accessible product. They are meant to provide a useful starting point for evaluating the accessibility of a product or conceptual design and are not intended to inhibit innovation. For a more complete list of all of the published strategies to date, as well as for further information and links to on-going discussions, the reader is referred to the National Institute on Disability and Rehabilitation Research's Rehabilitation Engineering Center on Access to Telecommunications System's strategies Web site (*http://trace.wisc.edu/world/telecomm/*).

2. This appendix is organized to correspond to the sections and paragraphs of the guidelines in this part to which the explanatory material relates. This appendix does not contain explanatory material for every section and paragraph of the guidelines in this part.

SUBPART A—GENERAL

Section 1193.3 Definitions

Readily Achievable

1. Section 255 defines ''readily achievable'' as having the same meaning as in the Americans with Disabilities Act (ADA). However, the ADA applies the term to the removal of barriers in existing public accommodations. Not all of the factors cited in the ADA or the Department of Justice (DOJ) implementing regulations (July 26, 1991) are easy to translate to the telecommunications context where the term applies to telecommunications equipment and customer premises equipment which is designed, developed and fabricated after February 8, 1996, the effective date of the Telecommunications Act of 1996.

2. It may not be readily achievable to make every product accessible or compatible. Depending on the design, technology, or several other factors, it may be determined that providing accessibility to all products in a product line is not readily achievable. The guidelines do not require accessibility or compatibility when that determination has been made, and it is up to the manufacturer to make it. However, the assessment as to whether it is or is not readily achievable cannot be bypassed simply because another product is already accessible. For this purpose, two products are considered to be different if they have different functions or features. Products which differ only cosmetically, where such differences do not affect functionality, are not considered separate products.

3. Below is a list of factors provided as interim guidance to manufacturers to assist them in making readily achievable assessments. The factors are derived from the ADA itself and the DOJ regulations and are presented in the order in which they appear in

those sources. Ultimately, the priority or weight of these factors is a compliance issue, under the jurisdiction of the Federal Communications Commission (FCC). Factors applicable to a determination of whether an action is readily achievable include: the nature and cost of the action needed to provide accessibility or compatibility; the overall resources of the manufacturer, including financial resources, technical expertise, component supply sources, equipment, or personnel; the overall financial resources of any parent corporation or entity, only to the extent such resources are available to the manufacturer; and whether the accessibility solution results in a fundamental alteration of the product.

a. One factor in making readily achievable assessments is the nature and cost of the action needed to provide accessibility or compatibility. The term readily achievable means that an action is ''easily accomplishable and able to be carried out without much difficulty or expense.'' The nature of the action or solution involves how easy it is to accomplish, including the availability of technology and expertise, and the ability to incorporate the solution into the production process. Obviously, knowing about an accessibility solution, even in detail, does not mean it is readily achievable for a specific manufacturer to implement it immediately. Even if it only requires substituting a different, compatible part, the new part must be ordered and integrated into the manufacturing process. A more extreme implementation might require re-tooling or redesign. On the other hand, a given solution might be so similar to the current design, development and fabrication process that it is readily achievable to implement it virtually overnight.

b. Another factor in making readily achievable assessments is the overall resources of the manufacturer, including financial resources, technical expertise, component supply sources, equipment, or personnel. The monetary resources of a manufacturer are obviously a factor in determining whether an action is readily achievable, but it may be appropriate to consider other resources, as well. For example, a company might have ample financial resources and, at first glance, appear to have no reason for not including a particular accessibility feature in a given product. However, it might be that the company lacks personnel with experience in software development, for example, needed to implement the design solution. One might reason that, if the financial resources are available, the company should hire the appropriate personnel, but, if it does, it may no longer have the financial resources to implement the design solution. One would expect that the company would develop the technical expertise over time and that eventually the access solution might become readily achievable.

c. Another factor in making readily achievable assessments is the overall financial resources of any parent corporation or entity, only to the extent such resources are available to the manufacturer. Both the ADA statutory definition of readily achievable and the DOJ regulations define the resources of a parent company as a factor. However, such resources are considered only to the extent those resources are available to the subsidiary. If, for example, the subsidiary is responsible for product design but the parent company is responsible for overall marketing, it may be appropriate to expect the parent company to address some of the marketing goals. If, on the other hand, the resources of a parent company are not available to the subsidiary, they may not be relevant. This determination would be made on a case-by-case basis.

d. A fourth factor in making readily achievable assessments is whether the accessibility solution results in a fundamental alteration of the product. This factor, derived by extension from the ''undue burden'' criteria of the ADA, takes into consideration the effect adding an accessibility feature might have on a given product. For example, it may not be readily achievable to add a large display for low vision users to a small pager designed to fit in a pocket, because making the device significantly larger would be a fundamental alteration of the device. On the other hand, adding a voice output may not involve a fundamental alteration and would serve both blind and low vision users. In addition, adding an infrared port might be readily achievable and would allow a large-display peripheral device to be coupled to it. Of course fundamental alteration means a change in the fundamental characteristic of the product, not merely a cosmetic or esthetic change.

SUBPART B—GENERAL REQUIREMENTS

Section 1193.23 Product Design, Development and Evaluation

Paragraph (a)

1. This section requires manufacturers to evaluate the accessibility, usability, and compatibility of telecommunications equipment and customer premises equipment and incorporate such evaluation throughout product design, development, and fabrication, as early and consistently as possible. Manufacturers must develop a process to ensure that products are designed, developed and fabricated to be accessible whenever it is readily achievable. Since what is readily achievable will vary according to the stage of development (i.e., some things will be readily achievable in the design phase which

may not be in later phases), barriers to accessibility and usability must be identified throughout product design and development, from conceptualization to production. Moreover, usability can be seriously affected even after production, if information is not provided in an effective manner.

2. The details of such an evaluation process will vary from one company to the next, so this section does not specify its structure or specific content. Instead, this section sets forth a series of factors that a manufacturer must consider in developing such a process. How, and to what extent, each of the factors is incorporated in a specific process is up to the manufacturer.

3. Different manufacturers, or even the same manufacturer at different times, have the flexibility to tailor any such plan to its own particular needs. This section does not prescribe any particular plan or content. It does not require that such a process be submitted to any entity or that it even be in writing. The requirement is outcome-oriented, and a process could range from purely conceptual to formally documented, as suits the manufacturer.

4. The goal is for designers to be aware of access and incorporate such considerations in the conceptualization of new products. When an idea is just beginning to take shape, a designer would ask, ''How would a blind person use this product? How would a deaf person use it?'' The sooner a manufacturer makes its design team cognizant of design issues for achieving accessibility; and proven solutions for accessibility and compatibility, the easier this process will be.

Paragraph (b)(1)

Market Research

1. The guidelines do not require market research, testing or consultation, only that they be considered and incorporated to the extent deemed appropriate for a given manufacturer. If a manufacturer has a large marketing effort, involving surveys and focus groups, it may be appropriate to include persons with disabilities in such groups. On the other hand, some small companies do not do any real marketing, per se, but may just notice that a product made by XYZ Corporation is selling well and, based on this ''marketing survey'' it decides it can make a cheaper one. Clearly, ''involvement'' of persons with disabilities is not appropriate in this case.

2. A manufacturer must consider how it could include individuals with disabilities in target populations of market research. It is important to realize that any target population for which a manufacturer might wish to focus a product contains individuals with disabilities, whether it is teenagers, single parents, women between the ages of 25 and 40, or any other subgroup, no matter how narrowly defined. Any market research which excludes individuals with disabilities will be deficient.

Paragraph (b)(2)

Product Design, Testing, Pilot Demonstrations, and Product Trials

1. Including individuals with disabilities in product design, testing, pilot demonstrations, and product trials will encourage appropriate design solutions to accessibility barriers. In addition, such involvement may result in designs which have an appeal to a broader market.

Paragraph (b)(3)

Working Cooperatively With Appropriate Disability-Related Organizations

1. Working cooperatively with appropriate disability-related organizations is one of the factors that manufacturers must consider in their product design and development process. The primary reason for working cooperatively is to exchange relevant information. This is a two-way process since the manufacturer will get information on barriers to the use of its products, and may also be alerted to possible sources for solutions. The process will also serve to inform individuals with disabilities about what is readily achievable. In addition, manufacturers will have a conduit to a source of subjects for market research and product trials.

2. Manufacturers should consult with representatives from a cross-section of disability groups, particularly individuals whose disabilities affect hearing, vision, movement, manipulation, speech, and interpretation of information.

3. Because of the complex interrelationship between equipment and services in providing accessibility to telecommunications products, coordination and cooperation between manufacturers and service providers will be beneficial. Involving service providers in the product development process will encourage appropriate design solutions to accessibility barriers and permit the exchange of relevant information.

Paragraph (b)(4)

Making Reasonable Efforts To Validate Unproven Access Solutions

1. Manufacturers must consider how they can make reasonable efforts to validate any unproven access solutions through testing with individuals with disabilities or with appropriate disability-related organizations that have established expertise with individuals with disabilities. It is important to obtain input from persons or organizations with established expertise to ensure that input is not based merely on individual preferences or limited experience.

2. This input should be sought from representatives from a cross-section of disability groups, particularly individuals whose disabilities affect hearing, vision, movement, manipulation, speech, and interpretation of information.

SUBPART C—REQUIREMENTS FOR ACCESSIBILITY AND USABILITY

Section 1193.33 Information, Documentation, and Training

Paragraph (a)

1. This section requires that manufacturers provide access to information and documentation. The information and documentation includes user guides, installation guides, and product support communications, regarding both the product in general and the accessibility features of the product. Information and documentation should be provided to people with disabilities at no additional charge. Alternate formats or alternate modes of this information is also required to be available. Manufacturers should also encourage distributors of their products to establish information dissemination and technical support programs similar to those established by the manufacturer.

Alternate Formats and Alternate Modes

1. Alternate formats may include, but are not limited to, Braille, ASCII text, large print, and audio cassette recording. Alternate modes may include, but are not limited to, voice, fax, relay service, TTY, Internet posting, captioning, text-to-speech synthesis, and video description.

2. In considering how to best provide product information to people with disabilities, it is essential that information be provided in an alternate format or mode that is usable by the person needing the information. For example, some individuals who are blind might require a manual in Braille to understand and use the product effectively. Other persons who are blind may prefer this information on a computer disk. Persons with limited reading skills may need this information recorded on audio cassette tape so they can listen to the manual. Still other persons with low vision may be able to read the text version of the manual if it is provided in a larger font. Likewise, if a tutorial video is provided, persons who are deaf may require a captioned version so that they will understand how to use the product effectively. Finally, individuals who rely on TTYs will need direct TTY access to a customer service line so they can ask questions about a product like everyone else.

3. This portion of the appendix explains how to provide information in alternate formats (Braille, ASCII text, large print, audio cassette) to persons with disabilities.[1]

Braille

4. Some persons who are blind rely on the use of Braille in order to obtain information that is typically provided in print. These persons may need Braille because of the nature of their disability (such as persons who are deaf-blind) or because of the complexity of the material. Most large urban areas have companies or organizations which can translate printed material to Braille. On the other hand, manufacturers may wish to consider producing Braille documents ''in house'' using a personal computer, Braille translation software, and a Braille printer. The disadvantage is the difficulty in ensuring quality control and accuracy. Software programs exist which can translate common word processing formats directly into Braille, but they are not always error free, especially if the document contains special characters, jargon, graphics, or charts. Since the typical office worker will not be able to proofread a Braille document, the initial apparent cost saving may be quickly lost by having to re-do documents. The Braille translation software costs approximately $500 and most Braille printers sold range from $2,000 to $5,000, however some Braille printers, depending on the speed and other features, do cost more. Depending on the quality of Braille to be generated, a Braille printer in the $4,000 range should be adequate for most users. By using automatic translation software, individuals who do not have knowledge of Braille or who have limited computer skills may be able to produce simple Braille documents without much trouble. If the document is of a complex format, however, such as a text box over multiple columns, a sophisticated knowledge of Braille translation software and formatting will be required.

Electronic Text

5. People who are blind or have low vision and who have access to computers may be able to use documents in electronic form. Electronic text must be provided in ASCII or a properly formatted word processor file. Using electronic text allows this information to be transmitted through e-mail or other on-line telecommunications. Blind or low vision persons who have access to a personal computer can then read the document using synthetic speech, an electronic Braille display, a large print computer monitor, or they can produce a hard copy in large print or Braille.

[1] This information was provided by the American Foundation for the Blind.

6. Documents prepared for electronic transmission should be in ASCII. Documents supplied on disk should also be provided in either ASCII or a word processor format usable by the customer. Word processing documents should be properly formatted before distribution or conversion to ASCII. To be correctly formatted, the document should be in Courier 10 point size and formatted for an 80 character line. Tables should be converted to plain text. Graphics or text boxes should be deleted and explained or described in text format. This will allow the reader to understand all of the documentation being presented. Replace bullets (•) with ''*'' or ''-'' and convert other extended ASCII characters into text. When converting a document into ASCII or word processor formats, it is important to utilize the appropriate ''tab key'' and ''centering key'' rather than using the space bar. This is necessary because Braille translation software relies on the proper use of commands to automate the formatting of a Braille document.

Large Print

7. Persons with low vision may require documentation to be provided in large print. Large print documents can easily be produced using a scalable font from any good word processing program and a standard laser printer. Using the document enlargement option on a photocopier will usually yield unsatisfactory results.

8. To obtain the best results follow these guidelines:

a. It is preferable to use paper that is standard 8½ × 11 inches. Larger paper may be used, but care should be taken that a document does not become too bulky, thus making it difficult to read. Always use 1 inch margins. Lines longer than 6⅓ inches will not track well for individuals who must use a magnifier.

b. The best contrast with the least glare is achieved on very pale yellow or cream-colored non-glossy paper, such as paper that is used for photocopying purposes. To produce a more aesthetic looking document, an off-white paper may be used and will still give good contrast while producing less glare than white. Do not use dark colors and shades of red. Double-sided copying (if print does not bleed through) will produce a less bulky document.

c. Remove formatting codes that can make reading more difficult. For example, centered or indented text could be difficult to track because only a few words will fit on a line. All text should begin at the left margin. Use only left margin justification to maintain uniform spacing across lines. Right margin justification can produce uneven spacing between letters and words. Use 1¼ (1.25) line spacing; do not double space. Replace tabs with two spaces. Page numbering should be at the top or bottom left. Avoid columns. If columns are absolutely necessary, use minimum space between columns. Use dot leaders for tabular material. For those individuals who are able to read graphics (via the use of a magnifier or other assistive device) graphics should be included, but placed on a separate page from the text. For those individuals with low vision who are unable to read graphics, tables, and charts this material must be removed from the document and an accurate description of this material should be included in a text format.

d. There is no standard typeface or point size. For more universal access, use 18 point type; anything larger could make text too choppy to read comfortably. Use a good strong bold typeface. Do not use italics, fine, or fancy typefaces. Do not use compressed typefaces; there should be normal ''white space'' between characters.

e. Use upper and lowercase letters.

f. Using these instructions, one page of print (11–12 point type) will equal approximately three pages of large print (14–18 point) depending on the density of the text.

Cassette Recordings

9. Some persons who are blind or who have learning disabilities may require documentation on audio cassettes. Audio materials can be produced commercially or in-house. Agencies sometimes record material in-house and purchase a high speed tape duplicator ($1,000–2,000) which is used to make cassette copies from the master. The cost of a duplicator can be higher depending upon the number of copies produced on a single run, and whether the duplicator can produce standard speed two-sided copies or half-speed four-sided copies. Although unit costs can be reduced by using the four-track, half-speed format, this will require the reader to use a specially designed playback machine. Tapes should be produced with ''tone indexing'' to allow a user to skip back and forth from one section to another. By following a few simple guidelines for selecting readers and creating recordings, most organizations will be able to successfully record most simple documents.

10. Further guidance in making cassette recordings includes:

a. The reader should be proficient in the language being recorded.

b. The reader should be familiar with the subject. Someone who is somewhat familiar with the technical aspects of a product but who can explain functions in ordinary language would be a logical person to record an audio cassette.

c. The reader should have good diction. Recording should be done in a conversational tone and at a conversational pace; neither too slow nor too fast.

d. The reader should be familiar with the material to minimize stumbling and hesitation.

e. The reader should not editorialize. When recording a document, it should be read in full. Graphic and pictorial information available to sighted readers should be described in the narrated text. Tables and charts whose contents are not already contained in text should be converted into text and included in the recording.

f. The reader should spell difficult or unusual words and words of foreign origin.

g. At the beginning of the tape, identify the reader, i.e., ''This document is being read by John Smith.''

h. On each side of the tape, identify the document and the page number where the reader is continuing, i.e., ''tape 2, side 1, Guide to Barrier Free Meetings, continuing on page 75.''

i. For blind users, all cassettes should be labeled in Braille so that they can easily be referenced in the appropriate order.

Alternate Modes

11. Information is provided increasingly through a variety of means including television advertisements, Internet postings, information seminars, and telephone. This portion of the appendix explains how to provide information in some alternate modes (captioning, video description, Internet postings, relay service, and TTY).

Captioning

12. When manufacturers of telecommunications equipment or customer premises equipment provide videos with their products (such as tutorials or information explaining various components of a product) the video should be available with captioning. Closed captioning refers to assistive technology designed to provide access to television for persons with hearing disabilities that is visible only through the use of a decoder. Open captions are visible at all times. Captioning is similar to subtitles in that the audio portion of a television program is displayed as printed words on the television screen. Captions should be carefully placed to identify speakers, on-and off-screen sound effects, music and laughter. Increased captioning was made possible because of the Television Decoder Circuitry Act which requires all television sets sold in the United States with screens 13 inches or larger to have built-in decoder circuitry.

13. Although captioning technology was developed specifically to make television and video presentations accessible to deaf and hard of hearing people, there has been widespread interest in using this technology to provide similar access to meetings, classroom teaching, and conferences. For meetings, video-conferences, information seminars, and the like, real-time captioning is sometimes provided. Real-time captioning uses a stenographic machine connected to a computer with translation software. The output is then displayed on a monitor or projected on a screen.

Video Description

14. Just as manufacturers of telecommunications equipment and customer premises equipment need to make their videos accessible to persons who are deaf or hard of hearing, they must also be accessible to persons who are blind or have low vision. This process is known as video description. Video description may either be a separate audio track that can be played simultaneously with the regular audio portion of the video material (adding description during pauses in the regular audio), or it can be added to (or ''mixed'' with) an existing soundtrack. The latter is the technique used for videotapes.

Internet Postings

15. The fastest growing way to obtain information about a product is through use of the Internet, and specifically the World Wide Web. However, many Internet users with disabilities have difficulty obtaining this information if it is not correctly formatted. This section provides information on how to make a World Wide Web site more accessible to persons with disabilities[2]. Because of its structure, the Web provides tremendous power and flexibility in presenting information in multiple formats (text, audio, video, and graphic). However, the features that provide power and elegance for some users present potential barriers for people with sensory disabilities. The indiscriminate use of graphic images and video restrict access for people who are blind or have low vision. Use of audio and non-captioned video restrict access for people who are deaf or hard of hearing.

16. The level of accessibility of the information on the Web is dependent on the format of the information, the transmission media, and the display system. Many of the issues related to the transmission media and the display system cannot be affected by the general user. On the other hand, anyone creating information for a Web server has control of the accessibility of the information. Careful design and coding of information will provide access to all people without compromising the power and elegance of the Web site.

17. A few suggestions are:

[2]This information is based on the document ''Writing HTML Documents and Implementing Accessibility for the World Wide Web'' by Paul Fountaine, Center for Information Technology Accommodation, General Services Administration. For further information, see *http://www.gsa.gov/coca*.

a. Every graphic image should have associated text. This will enable a person using a character-based program, such as Lynx, to understand the material being presented in the graphical format. It also allows anyone who does not want to wait for graphics to load to have quick access to the information on the site.

b. Provide text transcriptions or descriptions for all audio output. This will enable people who are deaf or hard of hearing to have access to this information, as well as individuals who do not have sound cards.

c. Make any link text descriptive, but not verbose. For example, words like ''this'', ''here'', and ''click'' do not convey enough information about the nature of the link, especially to people who are blind. Link text should consist of substantive, descriptive words which can be quickly reviewed by the user. Conversely, link text which is too long bogs down efficient browsing.

d. Provide alternate mechanisms for online forms. Forms are not supported by all browsers. Therefore, it is important to provide the user with an opportunity to select alternate methods to access such forms.

e. All Web pages should be tested using multiple viewers. At a minimum, pages should be tested with the latest version of Lynx to ensure that they can be used with screen reader software.

Telecommunications Relay Services (TRS)

18. By using telecommunications relay services (TRS), it has now become easier for persons with hearing and speech disabilities to communicate by the telephone. TRS links TTY users with those who do not have a TTY and use standard telephones. With TRS, a TTY user communicates with another person with the help of a communications assistant who is able to talk on the telephone and then communicate by typing the message verbatim, to the TTY user. The communications assistant also reads the message typed by the TTY user, or the TTY user may speak for him or herself using voice carry over.

19. There are now TRS programs in every state. Although TRS is very valuable, it does have limitations. For example, relay calls take longer, since they always involve a third party, and typing words takes longer than speaking words.

Text Telephones (TTYs)

20. A TTY also provides direct two-way typed conversations. The cost of these devices begins at approximately $200 and they can be operated by anyone who can type.

21. The following information is excerpted from the brochure ''Using a TTY'' which is available free of charge from the Access Board:

a. If the TTY line is also used for incoming voice calls, be sure the person who answers the phone knows how to recognize and answer a TTY call. You will usually hear silence, a high-pitched, electronic beeping sound, or a pre-recorded voice message when it is a TTY call. If there is silence, assume it is a TTY call.

b. TTYs should be placed near a standard telephone so there is minimal delay in answering incoming TTY calls.

c. To initiate a TTY call, place the telephone headset in the acoustic cups of the TTY adapter. If the TTY unit is directly connected to the phone line, there is no need to put the telephone headset in the acoustic cups. Turn the TTY on. Make sure there is a dial tone by checking for a steady light on the TTY status indicator.

d. Dial the number and watch the status indicator light to see if the dialed number is ringing. The ring will make a long slow flash or two short flashes with a pause in between. If the line is busy, you will see short, continuous flashes on the indicator light. When the phone is answered, you will see an irregular light signal as the phone is picked up and placed in the cradle. If you are calling a combination TTY and voice number, tap the space bar several times to help the person on the other end identify this as a TTY call.

e. The person who answers the call is the first to type. Answer the phone as you would by voice, then type ''GA''.

f. ''GA'' means ''I'm done, go ahead and type''. ''HD'' means hold. ''GA or SK'' means ''Is there anything more, I'm done''. ''SK'' means stop keying. This is how you show that the conversation is ended and that you will hang up. It is polite to type good-bye, thank you for calling, or some other closing remark before you type ''SK''. Stay on the line until both parties type SKSK.

22. Because of the amount of time it takes to send and receive messages, it is important to remember that short words and sentences are desired by both parties. With some TTY calls it is often not possible to interrupt when the other person is typing. If you get a garbled message in all numbers or mixed numbers and letters, tap the space bar and see if the message clears up. If not, when the person stops typing, you should type, ''Message garbled, please repeat.'' If the garbled messages continue, this may mean that one of the TTYs is not working properly, there is background noise causing interference, or that you may have a bad connection. In this case you should say something like, ''Let's hang up and I'll call you back.''

23. The typical TTY message will include many abbreviations and jargon. The message may also include misspelled words because, if the meaning is clear, many callers will not bother to correct spelling since it takes more time. Also, some TTY users communicate in American sign language, a language with its own grammar and syntax. English may be a second language. Extend the same patience

and courtesy to TTY callers as you do to all others.

Paragraph (b)

1. This paragraph requires manufacturers to supply a point of contact for obtaining information about accessibility features of the product and how to obtain documents in alternate formats. This could be the name of a specific person, a department or an office. Supplying a telephone number, and preferably a separate TTY number, is the most universal method. Web site and e-mail addresses are also desirable, but should not substitute for a telephone number since many more people have access to a telephone than have e-mail or Internet access. Of course, the means for requesting additional accessibility information must, itself, be accessible.

2. Automated voice response systems are not usable by deaf and hard of hearing persons. An approach to consider is to augment an automated voice response system with an automated TTY response system that also detects whether a caller is using voice or TTY.

3. The phone number should be prominently displayed in product literature. Ideally, it should be displayed on the outside of the package so that a potential buyer can obtain information about the accessibility before purchase. In addition, manufacturers should acquaint their distributors with this information so that they can assist customers with disabilities, such as a blind person unable to read the package information.

Paragraph (c)

1. This paragraph requires manufacturers to consider including information on accessibility in training a manufacturer provides to its staff. For example, if technical support staff are trained on how to provide good technical support, such a program should be expanded to include information on accessibility features of the manufacturer's products and peripheral devices that are compatible with them. Such staff should also have basic information on how to handle TTY and relay calls. Personnel who deal directly with the public, including market researchers, should be trained in basic disability ''etiquette.''

Section 1193.35 Redundancy and Selectability [Reserved]

1. Although this section is reserved, manufacturers of telecommunications equipment and customer premises equipment are encouraged to provide redundancy such that input and output functions are available in more than one mode.

2. Alternate input and output modes should be selectable by the user.

3. Products should incorporate multiple modes for input and output functions so the user is able to select the desired mode.

a. Since there is no single interface design that accommodates all disabilities, accessibility is likely to be accomplished through various product designs which emphasize interface flexibility to maximize user configurability and multiple, alternative and redundant modalities of input and output.

b. Selectability is especially important where an accessibility feature for one group of individuals with disabilities may conflict with an accessibility feature for another. This potential problem could be solved by allowing the user to switch one of the features on and off. For example, a conflict may arise between captioning (provided for persons who are deaf or hard of hearing) and a large font size (provided for persons with low vision). The resulting caption would either be so large that it obscures the screen or need to be scrolled or displayed in segments for a very short period of time.

c. It may not be readily achievable to provide all input and output functions in a single product or to permit all functions to be selectable. For example, switching requires control mechanisms which must be accessible and it may be more practical to have multiple modes running simultaneously. Whenever possible, it is preferable for the user to be able to turn on or off a particular mode.

4. Some experiments with smart cards are showing promise for enhancing accessibility. Instead of providing additional buttons or menu items to select appropriate input and output modes, basic user information can be stored on a smart card that triggers a custom configuration. For example, insertion of a particular card can cause a device to increase the font size on a display screen or activate speech output. Another might activate a feature to increase volume output, lengthen the response time between sequential operations, or allow two keys to be pressed sequentially instead of simultaneously. This technology, which depends on the issuance of a customized card to a particular individual, would allow redundancy and selectability without adding additional controls which would complicate the operation. As more and more functions are provided by software rather than hardware, this option may be more readily achievable.

5. The increasing use of ''plug-ins'' allow a product to be customized to the user's needs. Plug-ins function somewhat like peripheral devices to provide accessibility and there is no fundamental problem in using plug-ins to provide access, as long as the accessibility plug-ins are provided with the product. For example, at least one computer operating system comes packaged with accessibility enhancements which a user can install if wanted. In addition, modems are typically

sold with bundled software that provides the customer premises equipment functionality. A compatible screen reader program, for example, could be bundled with it. At least one software company has developed a generalized set of accessibility tools designed to be bundled with a variety of software products to provide access. As yet, such developments are not fully mature; most products are still installed by providing on-screen visual prompts, not accompanied by meaningful sounds.

Section 1193.41 Input, Controls, and Mechanical Functions

Paragraph (a)

Operable Without Vision

1. Individuals who are blind or have low vision cannot locate or identify controls, latches, or input slits by sight or operate controls that require sight. Products should be manufactured to be usable independently by these individuals. For example, individuals who cannot see must use either touch or sound to locate and identify controls. If a product uses a flat, smooth touch screen or touch membrane, the user without vision will not be able to locate the controls without auditory or tactile cues.

2. Once the controls have been located, the user must be able to identify the various functions of the controls. Having located and identified the controls, individuals must be able to operate them.

3. Below are some examples of ways to make products accessible to persons with visual disabilities:

a. If buttons are used on a product, make them discrete buttons which can be felt and located by touch. If a flat membrane is used for a keyboard, provide a raised edge around the control areas or buttons to make it possible to locate the keys by touch. Once an individual locates the different controls, he or she needs to identify what the keys are. If there is a standard number pad arrangement, putting a nib on the ''5'' key may be all that is necessary for identifying the numbers. On a QWERTY keyboard, putting a tactile nib on the ''F'' and ''J'' keys allows touch typists to easily locate their hands on the key.

b. Provide distinct shapes for keys to indicate their function or make it easy to tell them apart. Provide Braille labels for keys and controls for those who read Braille to determine the function and use of controls.

c. Provide large raised letters for short labels on large objects. Where it is not possible to use raised large letters, a voice mode selection could be incorporated that announces keys when pressed, but does not activate them. This would allow people to turn on the voice mode long enough to explore and locate the item they are interested in, then release the voice mode and press the control. If it is an adjustable control, voice confirmation of the status may also be important.

d. Provide tactile indication on a plug which is not a self-orienting plug. Wireless connections, which eliminate the need to orient or insert connectors, also solve the problem.

e. Avoid buttons that are activated when touched to allow an individual to explore the controls to find the desired button. If touch-activated controls cannot be avoided (for example, on a touch screen), provide an alternate mode where a confirm button is used to confirm selections (for example, items are read when touched, and activated when the confirm button is pressed). All actions should be reversible, or require confirmation before executing non-reversible actions.

f. Once controls have been located and users know what the functions are, they must be operable. Some types of controls, including mouse devices, track balls, dials without markings or stops, and push-button controls with only one state, where the position or setting is indicated only by a visual cue, will not be usable by persons who are blind or have low vision. Providing a rotational or linear stop and tactile or audio detents is a useful strategy. Another is to provide keyboard or push-button access to the functions. If the product has an audio system and microprocessor, use audio feedback of the setting. For simple products, tactile markings may be sufficient.

g. Controls may also be shaped so that they can easily be read by touch (e.g., a twist knob shaped like a pie wedge). For keys which do not have any physical travel, some type of audio or tactile feedback should be provided so that the individual knows when the key has been activated. A two-state key (on/off) should be physically different in each position (e.g., a toggle switch or a push-in/pop-out switch), so the person can tell what state the key is in by feeling it.

h. If an optional voice mode is provided for operating a product, a simple ''query'' mode can also be provided, which allows an individual to find out the function and state of a switch without actually activating it. In some cases, there may be design considerations which make the optimal mode for a sighted person inaccessible to someone without vision (e.g., use of a touch screen or mouse). In these cases, a primary strategy may be to provide a closely linked parallel method for efficiently achieving the same results (e.g., keyboard access) if there is a keyboard, or ''SpeedList'' access for touch screens.

Paragraph (b)

Operable With Low Vision and Limited or No Hearing

1. Individuals with low vision often also have hearing disabilities, especially older individuals. These persons cannot rely solely on audio access modes commonly used by people who are blind. Tactile strategies are still quite useful, although many older persons may not be familiar with Braille. The objective, therefore, is to maximize the number of people who can use their residual vision, combined with tactile senses, to operate a product.

2. Strategies for addressing this provision may include the following: a. Make the information on the product easier to see. Use high-contrast print symbols and visual indicators, minimize glare on the display and control surfaces, provide adequate lighting, position controls near the items they control to make them easy to find, and use Arabic instead of Roman numerals.

b. The type-face and type-spacing used can greatly affect legibility. The spacing between letters should be approximately 1/16 the height of uppercase letters and the spacing should be uniform from one label to the next. Also, symbols can sometimes be used which are much more legible and understandable than fine print.

c. Where the display is dynamic, provide a means for the user to enlarge the display and to ''freeze'' it. In addition to making it easier to see, there are strategies which can be used to reduce the need to see things clearly in order to operate them.

d. A judicious use of color-coding, always redundant with other cues, is extremely helpful to persons with low vision. These cues should follow standard conventions, and can be used to reduce the need to read labels (or read labels more than the first time). In addition, all of the tactile strategies discussed under section 1193.41 (a) can also be used here.

Paragraph (c)

Operable With Little or No Color Perception

1. Many people are unable to distinguish between certain color combinations. Others are unable to see color at all.

2. Strategies for addressing this provision include:

a. Eliminate the need for a person see color to operate the product. This does not eliminate the use of color completely but rather requires that any information essential to the operation of a product also be conveyed in some other fashion.

b. Avoid color pairs such as red/green and blue/yellow, that are indistinguishable by people with limited color perception.

c. Provide colors with different hues and intensity so that colored objects can be distinguished even on a black and white screen by their different appearance. Depending upon the product, the manufacturer may also be able to allow users to adjust colors to match their preferences and visual abilities.

d. Avoid colors with a low luminance.

Paragraph (d)

Operable Without Hearing

1. Individuals who are deaf or hard of hearing cannot locate or identify controls that require hearing. Products that provide only audio prompts cannot be used by individuals who are deaf or hard of hearing. For example, a voice-based interactive product that can be controlled only by listening to menu items and then pressing buttons is not accessible. By addressing the output issues under section 1193.43(d) many accessibility problems that affect input under this section can be solved.

2. Some strategies include:

a. Text versions of audio prompts could be provided which are synchronized with the audio so that the timing is the same.

b. If prompts are provided visually and no speech or vocalization is required, most problems associated with locating, identifying, and operating controls without hearing will be solved.

Paragraph (e)

Operable With Limited Manual Dexterity

1. Individuals may have difficulty manipulating controls on products for any number of reasons. Though these disabilities may vary widely, these persons have difficulty grasping, pinching, or twisting objects and often have difficulty with finer motor coordination. Some persons may use a headstick, mouthstick, or artificial limb.

2. Below are some strategies which will assist in designing products which will meet the needs of these persons:

a. Provide larger buttons and controls, or buttons which are more widely spaced, to reduce the likelihood that a user will accidentally activate an adjacent control.

b. Provide guard bars between the buttons or near the buttons so that accidental movements would hit the guard bars rather than accidentally bumping switches.

c. Provide an optional mode where buttons must be depressed for a longer period of time (e.g., SlowKeys) before they would accept input to help separate between inadvertent motions or bumps and desired activation.

d. Where two buttons must be depressed simultaneously, provide an option to allow them to be activated sequentially (e.g., StickiKeys).

e. Avoid buttons which are activated merely by touch, such as capacitance switches. Where that is difficult to do (e.g., with touchscreens), provide a ''confirm'' button

which an individual can use to confirm that the item touched is the desired one. Also, make all actions reversible, or request confirmation before initiating non-reversible actions.

f. Avoid latches, controls, or key combinations which require simultaneous activation of two or more buttons, or latches. Also, avoid very small controls or controls which require rotation of the wrist or pinching and twisting. Where this is not possible, provide alternate means for achieving the same functions.

g. Controls which have non-slip surfaces and those that can be operated with the side of the hand, elbow or pencil can be used to minimize physical activity required. In some cases, rotary controls can be used if they can be operated without grasping and twisting (e.g., a thin pie slice shape control or an edge control). Providing a concave top on buttons makes them easier to use.

h. Make it easier to insert cards or connectors by providing a bevel around the slot or connector, or use cards or connectors which can be inserted in any orientation or which self-center or self-align. Placing the slot or connector on the front and near a ledge or open space allows individuals to brace their hands or arms to make use of the slot or connector easier.

i. For some designs, controls which pose problems for individuals with disabilities may be the most efficient, logical or effective mechanism for a majority of users. In these cases, provide alternate strategies for achieving the same functions, but which do not require fine manipulation. Speech input or voice recognition could be provided as an alternate input, although it should not be the only input technique.

Paragraph (f)

Operable With Limited Reach and Strength

1. Some individuals may have difficulty operating systems which require reach or strength. The most straight-forward solution to this problem is to place the controls where they can be easily reached with minimal changes to body position. Many products also have controls located on different parts of the product.

2. When this is the case, the following strategies may be used:

a. Allow the functions to be controlled from the keyboard, which is located directly in front of the user.

b. Allow voice recognition to be used as an option. This provides input flexibility, but should never be the only means for achieving a function.

c. Provide a remote control option that moves all of the controls for the product together on a unit that can be positioned optimally for the individual. This allows the individual to operate the product without having to move to it. If this strategy is used, a standard communication format would be important to allow the use of alternate remote controls for those who cannot use the standard remote control.

d. Reduce the force needed to operate controls or latches and avoid the need for sustained pressure or activity (e.g., use guards rather than increased strength requirements to avoid accidental activation of crucial switches).

e. Provide arm or wrist rests or supports, create short cuts that reduce the number of actions needed, or completely eliminate the need to operate controls wherever possible by having automatic adjustments.

f. Section 4.34.3 of the Americans with Disabilities Act Accessibility Guidelines (ADAAG) also contains specific information concerning reach ranges. ADAAG gives specific guidance concerning access to the built environment. Section 4.34.3 indicates the reach ranges for a front or parallel approach to equipment for individuals using a wheelchair. This information may prove useful for those telecommunications manufacturers whose equipment is stationary, such as an information kiosk.

Paragraph (g)

Operable Without Time-Dependent Controls

1. Many persons find it very difficult to operate time-dependent controls.

2. Some strategies which address this problem include:

a. Avoid any timed-out situations or provide instances where the user must respond to a question or moving display in a set amount of time or at a specific time (e.g., a rotating display).

b. Where timed responses are required or appropriate, allow the user to adjust them or set the amount of time allotted to complete a given task. Warn users that time is running out and allow them to secure extended time.

c. If the standard mode of operation would be awkward or inefficient, then provide an alternate mode of operation that offers the same functions.

Paragraph (h)

Operable Without Speech

1. Many individuals cannot speak or speak clearly. Products which require speech in order to operate them should also provide an alternate way to achieve the same function.

2. Some strategies to achieve this include:

a. Provide an alternate mechanism for achieving all of the functions which are controlled by speech. If a product includes speech identification or verification, provide an alternate mechanism for this function as well.

b. Include individuals who are deaf or who have speech disabilities in the subject populations that are used to develop voice recognition algorithms, so that the algorithms will better accommodate a wider range of speech patterns.

Paragraph (i)

Operable With Limited Cognitive Skills

1. Many individuals have reduced cognitive abilities, including reduced memory, sequence tracking, and reading skills. This does not necessarily prevent these persons from using a telecommunications product or feature.

2. The following strategies are extensions of techniques for making products easier for everyone to learn and use:

a. Use standard colors and shapes and group similar functions together. On products which have some controls that are used by everyone and other controls which would only be used by advanced users, it is generally good practice to separate the two, putting the more advanced features behind a door or under a separate menu item.

b. Products which read the contents of the display aloud, or controls which announce their settings, are easier for individuals who have difficulty reading.

c. Design products that are self-adjusting to eliminate additional controls which must be learned, and reduce the visual clutter.

d. On products which have sign-in procedures, allow user settings to be associated with them when they sign in or insert their identification card. The system can then autoconfigure to them. Some new ''smart cards'' are being designed with user preferences encoded on the card.

e. Where a complex series of steps is required, provide cuing to help lead the person through the process. It is also helpful to provide an ''undo'' or back up function, so that any mistakes can be easily corrected. Most people will find this function helpful.

f. Where functions are not reversible, request some type of confirmation from the user before proceeding. On labels and instructions, it is helpful to use short and simple phrases or sentences. Avoid abbreviations wherever possible. Eliminate the need to respond within a certain time or to read text within a certain time.

Section 1193.43 Output, Displays, and Control Functions

Paragraph (a)

Availability of Visual Information

1. Just as persons with visual or cognitive disabilities need to be able to operate the input, controls, and mechanical functions of a product, they must also have access to the output functions.

2. The following are strategies for addressing this provision:

a. Provide speech output of all displayed text and labels. For information which is presented in non-text form (e.g., a picture or graphic), provide a verbal description unless the graphic is just decorative. When speech output is provided, allow for the spoken message to be repeated if the message is very long. Also, if the information being provided is personal in nature, it is recommended that headphones be provided in order to assure privacy. A message for stepping through menus is also helpful.

b. Providing Braille labels for controls is an extremely effective mechanism for those individuals who read Braille.

c. Large raised print can also be used but is generally restricted to rather large objects due to the size of the letters.

Paragraph (b)

Availability of Visual Information for Low Vision Users

1. Individuals with low vision often also have hearing disabilities, especially older individuals. These persons cannot rely solely on audio access modes commonly used by people who are blind. Tactile strategies are still quite useful. Many people who have low vision can use their vision to access visually presented information on a product.

2. Strategies for meeting this provision involve:

a. Provide larger, higher contrast text and graphics. Individuals with 20/200 vision can see lettering if they get close to it, unless it is very small or has very poor contrast. Although 14 or 18 point type is recommended for visual displays, it is usually not possible to put this size text on small products.

b. Make the lettering as large and high contrast as possible to maximize the number of people who can use the product.

c. On displays where the font size can be varied, allow the user to increase the font size, even if it means that the user must pan or move in order to see the full display.

Paragraph (c)

Access to Moving Text

1. Moving text can be an access problem because individuals with low vision, or other disabilities may find it difficult or impossible to track moving text with their eyes.

2. Strategies to address this requirement may include the following:

a. Provide a mechanism for freezing the text. Thus, persons could read the stationary text and obtain the same information.

b. Provide scrolling to display one full line at a time, with a pause before the next line replaces it.

c. Provide the same information in another type of display which does not move. The

right-to-left scrolling text on a TTY does not usually present a problem because it can be controlled by asking the sender to type slower or pause at specified intervals.

Paragraph (d)

Availability of Auditory Information

1. Individuals who have hearing disabilities are unable to receive auditory output, or mechanical and other sounds that are emitted by a product. These sounds are often important for the safe or effective operation of the product. Therefore, information which is presented auditorial should be available to all users.

2. Some strategies to achieve this include the following:

a. Provide a visual or tactile signal that will attract the person's attention and alert the user to a call, page, or other message, or to warn the user of significant mechanical difficulties in the product.

b. In portable products, a tactile signal such as vibration is often more effective than a visual signal because a visual signal may be missed. An auxiliary vibrating signaler might be effective if it is not readily achievable or effective to build vibration into a portable product.

c. For stationary products, a prominent visual indicator in the field of vision (e.g., a screen flash for a computer, or a flashing light for a telephone) is effective. To inform the user of the status of a process (e.g., line status on a telephone call, power on, saving to disk, or disconnected), text messages may be used. It is also desirable to have an image or light that is activated whenever acoustic energy is present on a telephone line.

d. Speech messages should be portrayed simultaneously in text form and displayed where easily seen by the user. Such captions should usually be verbatim and displayed long enough to be easily read. If the product provides speech messages and the user must respond to those messages (e.g., interactive voice response and voice mail), a TTY accessible method of accessing the product could be provided.

e. TTY to TTY long distance and message unit calls from pay telephones are often not possible because an operator says how much money must be deposited. Technology exists to have this information displayed on the telephone and a test installation is currently operating at the Butler plaza on the Pennsylvania Turnpike. In addition, if the product provides interactive communication using speech and video, it would be helpful to provide a method and channel for allowing non-speech communication (e.g., text conversation) in parallel with the video.

f. Certain operations of products make sounds that give status information, although these sounds are not programmed signals. Examples include the whir of an operating disk drive and the click of a key being pushed. Where sounds of this type provide information important for operating the product, such as a ''beep'' when a key is activated, provide a light or other visual confirmation of activation.

Paragraph (e)

Availability of Auditory Information for People Who Are Hard of Hearing

1. People who are hard of hearing but not deaf can often use their hearing to access auditory information on a product.

2. Strategies for addressing this requirement may include the following:

a. Improve the signal to noise ratio by making the volume adjustable, between 18–25 dB, increasing the maximum undistorted volume, and minimizing background noise by such methods as better coupling between the signal source and the user.

b. Alerting tones are most likely to be heard if they involve multiple tones, separated in frequency, which contrast with the environment.

c. Occasionally, varying tones may be preferred for attracting attention. If speech is used, it is best to test its intelligibility with individuals who are hard of hearing to maximize its clarity and ease of understanding. Provide the ability for the user to have any messages repeated or to repeat the message if no response is received from the user.

d. For essential auditory information, the information might be repeated and an acknowledgment from the user requested.

e. The intelligibility of the output can also be maximized by the location of the speakers and by keeping the speakers away from noise sources. However, visual displays are often more desirable than loud prompts or alerts, because the latter reduce privacy and can annoy others unless the amplified signal is isolated by means of a headphone, induction coupling, direct plug-in to a hearing aid, or other methods.

f. The use of a telephone handset or earcup which can be held up to the ear can improve intelligibility without disturbing others in the area. If a handset or earcup is used, making it compatible with a hearing aid allows users to directly couple the auditory signal to their hearing aids. If the microphone in the handset is not being used, turning it off will also reduce the amount of background noise which the person hears in the earpiece. Providing a headphone jack also allows individuals to plug in headphones, induction loops, or amplifiers which they may use to hear better.

Paragraph (f)

Prevention of Visually-Induced Seizures

1. Individuals with photo-sensitive epilepsy can have a seizure triggered by displays

which flicker or flash, particularly if the flash has a high intensity and within certain frequency ranges.

2. Strategies to address this requirement involve reducing or eliminating screen flicker or image flashing to the extent possible. In particular, the rates of 2 Hz or lower or 70 Hz or higher are recommended. This recommendation reflects current research data on people with photosensitive epilepsy which indicates that the peak sensitivity for these individuals is 20 Hz and that the sensitivity then drops off in both directions.

3. The chance of triggering seizures can also be reduced by avoiding very bright flashes which occupy a large part of the visual field (particularly in the center of the visual field) in order to minimize the impact on the visual cortex.

Paragraph (g)

Availability of Audio Cutoff

1. Individuals using the audio access mode, as well as those using a product with the volume turned up, need a way to limit the range of audio broadcast.

2. If an audio headphone jack is provided, a cut-off switch can be included in the jack so that insertion of the jack would cut off the speaker. If a telephone-like handset is used, the external speakers can be turned off when the handset is removed from the cradle.

Paragraph (h)

Non-Interference With Hearing Technologies

1. Individuals who are hard of hearing use hearing aids and other assistive listening devices but these devices cannot be used if a telecommunications product introduces noise into the listening aids because of stray electromagnetic interference.

2. Strategies for reducing this interference (as well as improving hearing aid immunity) are being researched. The most desirable strategy is to avoid the root causes of interference when a product is initially designed. If the root sources of interference cannot be removed, then shielding, placement of components to avoid hearing aid interference, and field-canceling techniques may be effective. Standards are being developed to limit interference to acceptable levels, but complete elimination for some technologies may not yet be practical.

3. In April 1996, the American National Standards Institute (ANSI) established a task group (ANSI C63) under its subcommittee on medical devices to develop standards to measure hearing aid compatibility and accessibility to digital wireless telecommunications. The C63.19 task group is continuing to develop its standard, C63.19–199X, American National Standard for Methods of Measurement for Hearing Aid Compatibility with Wireless Communications Devices. When the standard is completed, the Board intends to reference it in this appendix.

Paragraph (i)

Hearing Aid Coupling

1. Many individuals who are hard of hearing use hearing aids with a T-coil (or telecoil) feature to allow them to listen to audio output of products without picking up background noise and to avoid problems with feedback, signal attenuation or degradation.

2. The Hearing Aid Compatibility (HAC) Act defines a telephone as hearing aid compatible if it provides internal means for effective use with hearing aids and meets established technical standards for hearing aid compatibility.

3. The technical standards for HAC telephones are specified in ANSI/EIA–504–1989, ''Magnetic Field Intensity Criteria for Telephone Compatibility with Hearing Aids,'' ANSI/TIA/EIA–504–1–1994, ''An Addendum to EIA–504,'' which adds the HAC requirements, and the FCC regulations at 47 CFR 68.317 (a).

4. A good strategy for addressing this requirement for any product held up to the ear would be to meet these same technical requirements. If not readily achievable to provide built-in telecoil compatibility, other means of providing the electro-magnetic signal is the next strategy to be considered.

SUBPART D—REQUIREMENTS FOR COMPATIBILITY WITH PERIPHERAL DEVICES AND SPECIALIZED CUSTOMER PREMISES EQUIPMENT

Section 1193.51 Compatibility

Paragraph (a)

External Electronic Access to All Information and Control Mechanisms

1. Some individuals with severe or multiple disabilities are unable to use the built-in displays and control mechanisms on a product.

2. The two most common forms of manipulation-free connections are an infrared connection or a radio frequency connection point. Currently, the Infrared Data Association (IrDA) infrared connection point is the most universally used approach.

3. The Infrared Data Association together with dominant market players in the cellular and paging industries, Ericsson, Matsushita/Panasonic, Motorola, NEC, Nokia, NTT DoCoMo, Puma, and TU-KA Phone Kansai, announced on April 25, 1997 a proposed set of standards that will empower wireless communication devices, such as cellular phones, pagers and personal computers to transfer useful information over short distances using IrDA infrared data communication ports. Because the proposed standard is designed to be scalable, it is easy-to-adopt by a wide range of wireless devices from pagers

to more enhanced communications tools such as smart phones. (See *http://www.irda.org*).

4. Adding an infrared connector to the serial port of a peripheral device or specialized customer premises equipment will make these products more compatible with each other and with customer premises equipment.

5. An infrared link can provide a mechanism for providing access to smaller, more advanced telecommunication devices and provide a safety net for products which are unable to incorporate other technologies. There is a joint international effort to develop a Universal Remote Console Communication (URCC) protocol which would achieve this functionality. (See *http://trace.wisc.edu/world/urc/*).

Paragraph (b)

Connection Point for External Audio Processing Devices

1. Individuals using audio peripheral devices such as amplifiers, telecoil adapters, or direct-connection into a hearing aid need a standard, noise free way to tap into the audio generated by a product.

2. Individuals who cannot hear well can often use products if they can isolate and enhance the audio output. For example, they could plug in a headphone which makes the audio louder and helps shut out background noise; they might feed the signal through an amplifier to make it louder, or through filters or frequency shifters to make it better fit their audio profile. If they are wearing a hearing aid, they may directly connect their hearing aid to the audio signal or plug in a small audio loop which allows them to couple the audio signal through their hearing aid's built-in T-coil.

3. Devices which can process the information and provide visual and/or tactile output are also possible. The most common strategy for achieving this requirement is the use of a standard 9 mm miniature plug-in jack, common to virtually every personal tape player or radio. For small products, a subminiature phone jack could be used.

Paragraph (c)

Compatibility of Controls With Prosthetics

1. Individuals who have artificial hands or use headsticks or mouthsticks to operate products have difficulty with capacitive or heat-operated controls which require contact with a person's body rather than a tool. Individuals who wear prosthetics are unable to operate some types of products because they either require motions that cannot easily be made with a prosthetic hand, or because products are designed which require touch of the human skin to operate them (e.g., capacitive touchscreen kiosks), making it impossible for individuals with artificial arms or hands to operate, except perhaps with their nose or chin. Some individuals who do not have the use of their arms use either a headstick or a mouthstick to operate products. Controls and mechanisms which require a grasping and twisting motion should be avoided.

Paragraph (d)

TTY Connectability

1. Acoustic coupling is subject to interference from ambient noise, as many handsets do not provide an adequate seal with TTYs. Therefore, alternate (non-acoustic) connections are needed. Control of the microphone is needed for situations such as pay-phone usage, where ambient noise picked up by the mouthpiece often garbles the signal. For the use of voice carry-over, where the person can speak but not hear, the user needs to be able to turn the microphone on to speak and off to allow them to receive the TTY text replies.

2. A TTY can be connected to and used with any telecommunications product supporting speech communication without requiring purchase of a special adapter, and the user is able to intermix speech and clear TTY communication. The most common approach today is to provide an RJ–11 jack. On very small products, where there may not be room for this large jack, a miniature or subminiature phone-jack wired as a ''headset'' jack (with both speaker and microphone connections) could be used as an alternate approach. In either case, a mechanism for turning the phone mouthpiece (microphone) on and off would reduce garbling in noisy environments, while allowing the user to speak into the microphone when desired (to conduct conversations with mixed voice and TTY). For equipment that combines voice communications, displays, keyboards and data communication functions, it is desirable to build in direct TTY capability.

Paragraph (e)

TTY Signal Compatibility

1. Some telecommunications systems compress the audio signal in such a manner that standard signals used by a TTY is distorted or attenuated preventing successful TTY communication over the system. A TTY can be used with any product providing voice communication function.

2. The de facto standard of domestic TTYs is Baudot which has been defined in ITU-T Recommendation V.18. Although the V.18 standard has been adopted, products are not yet available which meet its requirements.

3. This provision can be addressed by ensuring that the tones used can travel

through the phones compression circuits undistorted. It is even more desirable to provide undistorted connectivity to the telephone line in the frequency range of 390 Hz to 2300 Hz (ITU-T Recommendation V.18), as this range covers all of the TTY protocols known throughout the world. Although it may not be achievable with current technology, an alternate strategy might be to recognize the tones, transmit them as codes, and resynthesize them at the other end. In addition, it should be possible for individuals using TTYs to conduct conversations with mixed voice and TTY, and to control all aspects of the product and receive any messages generated by the product.

PART 1194—ELECTRONIC AND INFORMATION TECHNOLOGY ACCESSIBILITY STANDARDS

Subpart A—General

Sec.
1194.1 Purpose.
1194.2 Application.
1194.3 General exceptions.
1194.4 Definitions.
1194.5 Equivalent facilitation.

Subpart B—Technical Standards

1194.21 Software applications and operating systems.
1194.22 Web-based intranet and internet information and applications.
1194.23 Telecommunications products.
1194.24 Video and multimedia products.
1194.25 Self contained, closed products.
1194.26 Desktop and portable computers.

Subpart C—Functional Performance Criteria

1194.31 Functional performance criteria.

Subpart D—Information, Documentation, and Support

1194.41 Information, documentation, and support.
FIGURES TO PART 1194

AUTHORITY: 29 U.S.C. 794d.

SOURCE: 65 FR 80523, Dec. 21, 2000, unless otherwise noted.

Subpart A—General

§ 1194.1 Purpose.

The purpose of this part is to implement section 508 of the Rehabilitation Act of 1973, as amended (29 U.S.C. 794d). Section 508 requires that when Federal agencies develop, procure, maintain, or use electronic and information technology, Federal employees with disabilities have access to and use of information and data that is comparable to the access and use by Federal employees who are not individuals with disabilities, unless an undue burden would be imposed on the agency. Section 508 also requires that individuals with disabilities, who are members of the public seeking information or services from a Federal agency, have access to and use of information and data that is comparable to that provided to the public who are not individuals with disabilities, unless an undue burden would be imposed on the agency.

§ 1194.2 Application.

(a) Products covered by this part shall comply with all applicable provisions of this part. When developing, procuring, maintaining, or using electronic and information technology, each agency shall ensure that the products comply with the applicable provisions of this part, unless an undue burden would be imposed on the agency.

(1) When compliance with the provisions of this part imposes an undue burden, agencies shall provide individuals with disabilities with the information and data involved by an alternative means of access that allows the individual to use the information and data.

(2) When procuring a product, if an agency determines that compliance with any provision of this part imposes an undue burden, the documentation by the agency supporting the procurement shall explain why, and to what extent, compliance with each such provision creates an undue burden.

(b) When procuring a product, each agency shall procure products which comply with the provisions in this part when such products are available in the commercial marketplace or when such products are developed in response to a Government solicitation. Agencies cannot claim a product as a whole is not commercially available because no product in the marketplace meets all the standards. If products are commercially available that meet some but not all of the standards, the agency must procure the product that best meets the standards.

(c) Except as provided by § 1194.3(b), this part applies to electronic and information technology developed, procured, maintained, or used by agencies directly or used by a contractor under a contract with an agency which requires the use of such product, or requires the use, to a significant extent, of such product in the performance of a service or the furnishing of a product.

§ 1194.3 General exceptions.

(a) This part does not apply to any electronic and information technology operated by agencies, the function, operation, or use of which involves intelligence activities, cryptologic activities related to national security, command and control of military forces, equipment that is an integral part of a weapon or weapons system, or systems which are critical to the direct fulfillment of military or intelligence missions. Systems which are critical to the direct fulfillment of military or intelligence missions do not include a system that is to be used for routine administrative and business applications (including payroll, finance, logistics, and personnel management applications).

(b) This part does not apply to electronic and information technology that is acquired by a contractor incidental to a contract.

(c) Except as required to comply with the provisions in this part, this part does not require the installation of specific accessibility-related software or the attachment of an assistive technology device at a workstation of a Federal employee who is not an individual with a disability.

(d) When agencies provide access to the public to information or data through electronic and information technology, agencies are not required to make products owned by the agency available for access and use by individuals with disabilities at a location other than that where the electronic and information technology is provided to the public, or to purchase products for access and use by individuals with disabilities at a location other than that where the electronic and information technology is provided to the public.

(e) This part shall not be construed to require a fundamental alteration in the nature of a product or its components.

(f) Products located in spaces frequented only by service personnel for maintenance, repair, or occasional monitoring of equipment are not required to comply with this part.

§ 1194.4 Definitions.

The following definitions apply to this part:

Agency. Any Federal department or agency, including the United States Postal Service.

Alternate formats. Alternate formats usable by people with disabilities may include, but are not limited to, Braille, ASCII text, large print, recorded audio, and electronic formats that comply with this part.

Alternate methods. Different means of providing information, including product documentation, to people with disabilities. Alternate methods may include, but are not limited to, voice, fax, relay service, TTY, Internet posting, captioning, text-to-speech synthesis, and audio description.

Assistive technology. Any item, piece of equipment, or system, whether acquired commercially, modified, or customized, that is commonly used to increase, maintain, or improve functional capabilities of individuals with disabilities.

Electronic and information technology. Includes information technology and any equipment or interconnected system or subsystem of equipment, that is used in the creation, conversion, or duplication of data or information. The term electronic and information technology includes, but is not limited to, telecommunications products (such as telephones), information kiosks and transaction machines, World Wide Web sites, multimedia, and office equipment such as copiers and fax machines. The term does not include any equipment that contains embedded information technology that is used as an integral part of the product, but the principal function of which is not the acquisition, storage, manipulation, management, movement, control, display, switching, interchange, transmission, or reception of data or information.

For example, HVAC (heating, ventilation, and air conditioning) equipment such as thermostats or temperature control devices, and medical equipment where information technology is integral to its operation, are not information technology.

Information technology. Any equipment or interconnected system or subsystem of equipment, that is used in the automatic acquisition, storage, manipulation, management, movement, control, display, switching, interchange, transmission, or reception of data or information. The term information technology includes computers, ancillary equipment, software, firmware and similar procedures, services (including support services), and related resources.

Operable controls. A component of a product that requires physical contact for normal operation. Operable controls include, but are not limited to, mechanically operated controls, input and output trays, card slots, keyboards, or keypads.

Product. Electronic and information technology.

Self Contained, Closed Products. Products that generally have embedded software and are commonly designed in such a fashion that a user cannot easily attach or install assistive technology. These products include, but are not limited to, information kiosks and information transaction machines, copiers, printers, calculators, fax machines, and other similar types of products.

Telecommunications. The transmission, between or among points specified by the user, of information of the user's choosing, without change in the form or content of the information as sent and received.

TTY. An abbreviation for teletypewriter. Machinery or equipment that employs interactive text based communications through the transmission of coded signals across the telephone network. TTYs may include, for example, devices known as TDDs (telecommunication display devices or telecommunication devices for deaf persons) or computers with special modems. TTYs are also called text telephones.

Undue burden. Undue burden means significant difficulty or expense. In determining whether an action would result in an undue burden, an agency shall consider all agency resources available to the program or component for which the product is being developed, procured, maintained, or used.

§ 1194.5 Equivalent facilitation.

Nothing in this part is intended to prevent the use of designs or technologies as alternatives to those prescribed in this part provided they result in substantially equivalent or greater access to and use of a product for people with disabilities.

Subpart B—Technical Standards

§ 1194.21 Software applications and operating systems.

(a) When software is designed to run on a system that has a keyboard, product functions shall be executable from a keyboard where the function itself or the result of performing a function can be discerned textually.

(b) Applications shall not disrupt or disable activated features of other products that are identified as accessibility features, where those features are developed and documented according to industry standards. Applications also shall not disrupt or disable activated features of any operating system that are identified as accessibility features where the application programming interface for those accessibility features has been documented by the manufacturer of the operating system and is available to the product developer.

(c) A well-defined on-screen indication of the current focus shall be provided that moves among interactive interface elements as the input focus changes. The focus shall be programmatically exposed so that assistive technology can track focus and focus changes.

(d) Sufficient information about a user interface element including the identity, operation and state of the element shall be available to assistive technology. When an image represents a program element, the information conveyed by the image must also be available in text.

(e) When bitmap images are used to identify controls, status indicators, or

other programmatic elements, the meaning assigned to those images shall be consistent throughout an application's performance.

(f) Textual information shall be provided through operating system functions for displaying text. The minimum information that shall be made available is text content, text input caret location, and text attributes.

(g) Applications shall not override user selected contrast and color selections and other individual display attributes.

(h) When animation is displayed, the information shall be displayable in at least one non-animated presentation mode at the option of the user.

(i) Color coding shall not be used as the only means of conveying information, indicating an action, prompting a response, or distinguishing a visual element.

(j) When a product permits a user to adjust color and contrast settings, a variety of color selections capable of producing a range of contrast levels shall be provided.

(k) Software shall not use flashing or blinking text, objects, or other elements having a flash or blink frequency greater than 2 Hz and lower than 55 Hz.

(l) When electronic forms are used, the form shall allow people using assistive technology to access the information, field elements, and functionality required for completion and submission of the form, including all directions and cues.

§ 1194.22 Web-based intranet and internet information and applications.

(a) A text equivalent for every non-text element shall be provided (e.g., via ''alt'', ''longdesc'', or in element content).

(b) Equivalent alternatives for any multimedia presentation shall be synchronized with the presentation.

(c) Web pages shall be designed so that all information conveyed with color is also available without color, for example from context or markup.

(d) Documents shall be organized so they are readable without requiring an associated style sheet.

(e) Redundant text links shall be provided for each active region of a server-side image map.

(f) Client-side image maps shall be provided instead of server-side image maps except where the regions cannot be defined with an available geometric shape.

(g) Row and column headers shall be identified for data tables.

(h) Markup shall be used to associate data cells and header cells for data tables that have two or more logical levels of row or column headers.

(i) Frames shall be titled with text that facilitates frame identification and navigation.

(j) Pages shall be designed to avoid causing the screen to flicker with a frequency greater than 2 Hz and lower than 55 Hz.

(k) A text-only page, with equivalent information or functionality, shall be provided to make a web site comply with the provisions of this part, when compliance cannot be accomplished in any other way. The content of the text-only page shall be updated whenever the primary page changes.

(l) When pages utilize scripting languages to display content, or to create interface elements, the information provided by the script shall be identified with functional text that can be read by assistive technology.

(m) When a web page requires that an applet, plug-in or other application be present on the client system to interpret page content, the page must provide a link to a plug-in or applet that complies with § 1194.21(a) through (l).

(n) When electronic forms are designed to be completed on-line, the form shall allow people using assistive technology to access the information, field elements, and functionality required for completion and submission of the form, including all directions and cues.

(o) A method shall be provided that permits users to skip repetitive navigation links.

(p) When a timed response is required, the user shall be alerted and given sufficient time to indicate more time is required.

NOTE TO § 1194.22: 1. The Board interprets paragraphs (a) through (k) of this section as consistent with the following priority 1

Checkpoints of the Web Content Accessibility Guidelines 1.0 (WCAG 1.0) (May 5, 1999) published by the Web Accessibility Initiative of the World Wide Web Consortium:

Section 1194.22 paragraph	WCAG 1.0 checkpoint
(a)	1.1
(b)	1.4
(c)	2.1
(d)	6.1
(e)	1.2
(f)	9.1
(g)	5.1
(h)	5.2
(i)	12.1
(j)	7.1
(k)	11.4

2. Paragraphs (l), (m), (n), (o), and (p) of this section are different from WCAG 1.0. Web pages that conform to WCAG 1.0, level A (*i.e.*, all priority 1 checkpoints) must also meet paragraphs (l), (m), (n), (o), and (p) of this section to comply with this section. WCAG 1.0 is available at *http://www.w3.org/TR/1999/WAI-WEBCONTENT-19990505*.

§ 1194.23 Telecommunications products.

(a) Telecommunications products or systems which provide a function allowing voice communication and which do not themselves provide a TTY functionality shall provide a standard non-acoustic connection point for TTYs. Microphones shall be capable of being turned on and off to allow the user to intermix speech with TTY use.

(b) Telecommunications products which include voice communication functionality shall support all commonly used cross-manufacturer non-proprietary standard TTY signal protocols.

(c) Voice mail, auto-attendant, and interactive voice response telecommunications systems shall be usable by TTY users with their TTYs.

(d) Voice mail, messaging, auto-attendant, and interactive voice response telecommunications systems that require a response from a user within a time interval, shall give an alert when the time interval is about to run out, and shall provide sufficient time for the user to indicate more time is required.

(e) Where provided, caller identification and similar telecommunications functions shall also be available for users of TTYs, and for users who cannot see displays.

(f) For transmitted voice signals, telecommunications products shall provide a gain adjustable up to a minimum of 20 dB. For incremental volume control, at least one intermediate step of 12 dB of gain shall be provided.

(g) If the telecommunications product allows a user to adjust the receive volume, a function shall be provided to automatically reset the volume to the default level after every use.

(h) Where a telecommunications product delivers output by an audio transducer which is normally held up to the ear, a means for effective magnetic wireless coupling to hearing technologies shall be provided.

(i) Interference to hearing technologies (including hearing aids, cochlear implants, and assistive listening devices) shall be reduced to the lowest possible level that allows a user of hearing technologies to utilize the telecommunications product.

(j) Products that transmit or conduct information or communication, shall pass through cross-manufacturer, non-proprietary, industry-standard codes, translation protocols, formats or other information necessary to provide the information or communication in a usable format. Technologies which use encoding, signal compression, format transformation, or similar techniques shall not remove information needed for access or shall restore it upon delivery.

(k) Products which have mechanically operated controls or keys, shall comply with the following:

(1) Controls and keys shall be tactilely discernible without activating the controls or keys.

(2) Controls and keys shall be operable with one hand and shall not require tight grasping, pinching, or twisting of the wrist. The force required to activate controls and keys shall be 5 lbs. (22.2 N) maximum.

(3) If key repeat is supported, the delay before repeat shall be adjustable to at least 2 seconds. Key repeat rate shall be adjustable to 2 seconds per character.

(4) The status of all locking or toggle controls or keys shall be visually discernible, and discernible either through touch or sound.

§ 1194.24 Video and multimedia products.

(a) All analog television displays 13 inches and larger, and computer equipment that includes analog television receiver or display circuitry, shall be equipped with caption decoder circuitry which appropriately receives, decodes, and displays closed captions from broadcast, cable, videotape, and DVD signals. As soon as practicable, but not later than July 1, 2002, widescreen digital television (DTV) displays measuring at least 7.8 inches vertically, DTV sets with conventional displays measuring at least 13 inches vertically, and stand-alone DTV tuners, whether or not they are marketed with display screens, and computer equipment that includes DTV receiver or display circuitry, shall be equipped with caption decoder circuitry which appropriately receives, decodes, and displays closed captions from broadcast, cable, videotape, and DVD signals.

(b) Television tuners, including tuner cards for use in computers, shall be equipped with secondary audio program playback circuitry.

(c) All training and informational video and multimedia productions which support the agency's mission, regardless of format, that contain speech or other audio information necessary for the comprehension of the content, shall be open or closed captioned.

(d) All training and informational video and multimedia productions which support the agency's mission, regardless of format, that contain visual information necessary for the comprehension of the content, shall be audio described.

(e) Display or presentation of alternate text presentation or audio descriptions shall be user-selectable unless permanent.

§ 1194.25 Self contained, closed products.

(a) Self contained products shall be usable by people with disabilities without requiring an end-user to attach assistive technology to the product. Personal headsets for private listening are not assistive technology.

(b) When a timed response is required, the user shall be alerted and given sufficient time to indicate more time is required.

(c) Where a product utilizes touchscreens or contact-sensitive controls, an input method shall be provided that complies with § 1194.23 (k) (1) through (4).

(d) When biometric forms of user identification or control are used, an alternative form of identification or activation, which does not require the user to possess particular biological characteristics, shall also be provided.

(e) When products provide auditory output, the audio signal shall be provided at a standard signal level through an industry standard connector that will allow for private listening. The product must provide the ability to interrupt, pause, and restart the audio at anytime.

(f) When products deliver voice output in a public area, incremental volume control shall be provided with output amplification up to a level of at least 65 dB. Where the ambient noise level of the environment is above 45 dB, a volume gain of at least 20 dB above the ambient level shall be user selectable. A function shall be provided to automatically reset the volume to the default level after every use.

(g) Color coding shall not be used as the only means of conveying information, indicating an action, prompting a response, or distinguishing a visual element.

(h) When a product permits a user to adjust color and contrast settings, a range of color selections capable of producing a variety of contrast levels shall be provided.

(i) Products shall be designed to avoid causing the screen to flicker with a frequency greater than 2 Hz and lower than 55 Hz.

(j) Products which are freestanding, non-portable, and intended to be used in one location and which have operable controls shall comply with the following:

(1) The position of any operable control shall be determined with respect to a vertical plane, which is 48 inches in length, centered on the operable control, and at the maximum protrusion of the product within the 48 inch length (see Figure 1 of this part).

(2) Where any operable control is 10 inches or less behind the reference plane, the height shall be 54 inches maximum and 15 inches minimum above the floor.

(3) Where any operable control is more than 10 inches and not more than 24 inches behind the reference plane, the height shall be 46 inches maximum and 15 inches minimum above the floor.

(4) Operable controls shall not be more than 24 inches behind the reference plane (see Figure 2 of this part).

§ 1194.26 Desktop and portable computers.

(a) All mechanically operated controls and keys shall comply with § 1194.23(k)(1) through (4).

(b) If a product utilizes touchscreens or touch-operated controls, an input method shall be provided that complies with § 1194.23 (k) (1) through (4).

(c) When biometric forms of user identification or control are used, an alternative form of identification or activation, which does not require the user to possess particular biological characteristics, shall also be provided.

(d) Where provided, at least one of each type of expansion slots, ports and connectors shall comply with publicly available industry standards.

Subpart C—Functional Performance Criteria

§ 1194.31 Functional performance criteria.

(a) At least one mode of operation and information retrieval that does not require user vision shall be provided, or support for assistive technology used by people who are blind or visually impaired shall be provided.

(b) At least one mode of operation and information retrieval that does not require visual acuity greater than 20/70 shall be provided in audio and enlarged print output working together or independently, or support for assistive technology used by people who are visually impaired shall be provided.

(c) At least one mode of operation and information retrieval that does not require user hearing shall be provided, or support for assistive technology used by people who are deaf or hard of hearing shall be provided.

(d) Where audio information is important for the use of a product, at least one mode of operation and information retrieval shall be provided in an enhanced auditory fashion, or support for assistive hearing devices shall be provided.

(e) At least one mode of operation and information retrieval that does not require user speech shall be provided, or support for assistive technology used by people with disabilities shall be provided.

(f) At least one mode of operation and information retrieval that does not require fine motor control or simultaneous actions and that is operable with limited reach and strength shall be provided.

Subpart D—Information, Documentation, and Support

§ 1194.41 Information, documentation, and support.

(a) Product support documentation provided to end-users shall be made available in alternate formats upon request, at no additional charge.

(b) End-users shall have access to a description of the accessibility and compatibility features of products in alternate formats or alternate methods upon request, at no additional charge.

(c) Support services for products shall accommodate the communication needs of end-users with disabilities.

FIGURES TO PART 1194

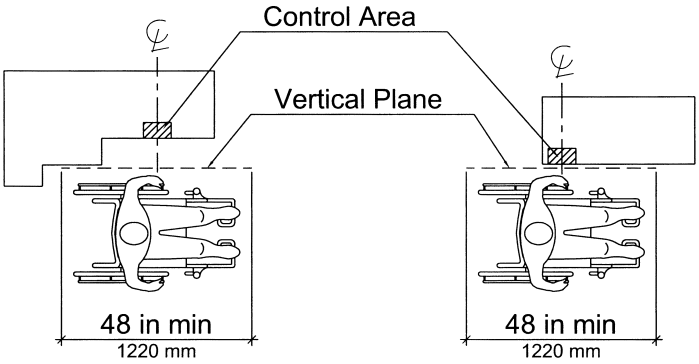

Vertical Plane Relative to the Operable Control

Figure 1

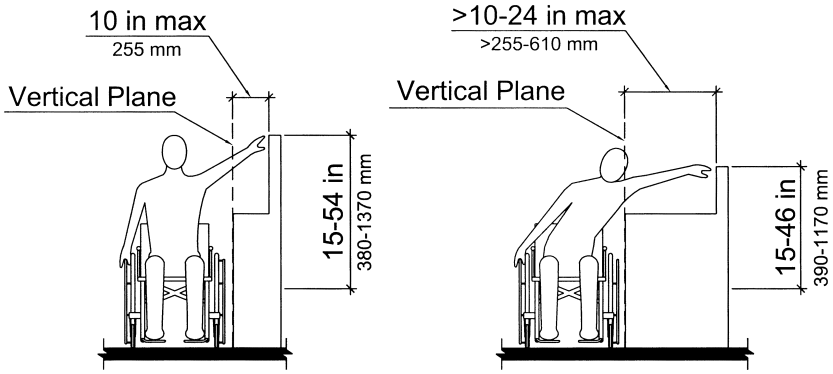

Height of Operable Control Relative to the Vertical Plane

Figure 2

PARTS 1195–1199 [RESERVED]

CHAPTER XII—NATIONAL ARCHIVES AND RECORDS ADMINISTRATION

EDITORIAL NOTE: Nomenclature changes to chapter XII appear at 69 FR 18803, Apr. 9, 2004.

SUBCHAPTER A—GENERAL RULES

Part		*Page*
1200	Official seals	485
1201	Collection of claims	497
1202	Regulations implementing the Privacy Act of 1974	512
1206	National Historical Publications and Records Commission	522
1208	Enforcement of nondiscrimination on the basis of handicap in programs or activities conducted by the National Archives and Records Administration	531
1211	Nondiscrimination on the basis of sex in education programs or activities receiving Federal financial assistance	537
1212	Governmentwide requirements for drug-free workplace (financial assistance)	559

SUBCHAPTER B—RECORDS MANAGEMENT

1220	Federal records; general	565
1222	Creation and maintenance of Federal records	570
1223	Managing vital records	575
1224	Records disposition program	578
1225	Scheduling records	579
1226	Implementing disposition	583
1227	General records schedules	587
1228	Loan of permanent and unscheduled records	588
1229	Emergency authorization to destroy records	589
1230	Unlawful or accidental removal, defacing, alteration, or destruction of records	590
1231	Transfer of records from the custody of one executive agency to another	591
1232	Transfer of records to records storage facilities	592
1233	Transfer, use, and disposition of records in a NARA Federal Records Center	595

Part		Page
1234	Facility standards for records storage facilities	598
1235	Transfer of records to the National Archives of the United States	615
1236	Electronic records management	622
1237	Audiovisual, cartographic, and related records management	627
1238	Microforms records management	634
1239	Program assistance and inspections	641
1240–1249	[Reserved]	
	SUBCHAPTER C—PUBLIC AVAILABILITY AND USE	
1250	NARA records subject to FOIA	644
1251	Testimony by NARA employees relating to agency information and production of records in legal proceedings	658
1252	Public use of records, donated historical materials, and facilities; general	664
1253	Location of NARA facilities and hours of use	664
1254	Using records and donated historical materials	667
1256	Access to records and donated historical materials	685
1258	Fees	696
	SUBCHAPTER D—DECLASSIFICATION	
1260	Declassification of national security information	701
	SUBCHAPTER E—PRESIDENTIAL RECORDS	
1270	Presidential records	711
	SUBCHAPTER F—NIXON PRESIDENTIAL MATERIALS	
1275	Preservation and protection of and access to the Presidential historical materials of the Nixon Administration	716
	SUBCHAPTER G—NARA FACILITIES	
1280	Use of NARA facilities	733
1281	Presidential library facilities	745
1284	Exhibits	749
	SUBCHAPTER H—JFK ASSASSINATION RECORDS	
1290	Guidance for interpretation and implementation of the President John F. Kennedy Assassination Records Collection Act of 1992 (JFK Act)	751
1291–1299	[Reserved]	

SUBCHAPTER A—GENERAL RULES

PART 1200—OFFICIAL SEALS

Subpart A—General

Sec.
1200.1 Definitions.

Subpart B—How are NARA's Official Seals and Logos Designed and Used?

1200.2 How is each NARA seal designed?
1200.4 How does NARA use its official seals?
1200.6 Who is authorized to apply the official seals on documents or other materials?
1200.7 What are NARA logos and how are they used?

Subpart C—Procedures for the Public To Request and Use NARA Seals and Logos

1200.8 How do I request to use the official seals and logos?
1200.10 What are NARA's criteria for approval?
1200.12 How does NARA notify me of the determination?
1200.14 What are NARA's conditions for the use of the official seals and logos?

Subpart D—Penalties for Misuse of NARA Seals and Logos

1200.16 Will I be penalized for misusing the official seals and logos?

AUTHORITY: 18 U.S.C. 506, 701, and 1017; 44 U.S.C. 2104(e), 2116(b), 2302.

SOURCE: 67 FR 72101, Dec. 4, 2002, unless otherwise noted.

Subpart A—General

§ 1200.1 Definitions.

The following definitions apply to this part:

Embossing seal means a display of the form and content of the official seal made on a die so that the seal can be embossed on paper or other medium.

NARA means all organizational units of the National Archives and Records Administration.

NARA logo means a name, trademark, service mark, or symbol used by NARA in connection with its programs, products, or services.

Official seal means the original(s) of the seal showing the exact form and content.

Replica or reproduction means a copy of an official seal or NARA logo displaying the form and content.

[67 FR 72101, Dec. 4, 2002, as amended at 69 FR 26046, May 11, 2004]

Subpart B—How are NARA's Official Seals and Logos Designed and Used?

§ 1200.2 How is each NARA seal designed?

NARA's three official seals are illustrated in Figures 1, 2, and 30.

A description of each seal is as follows:

(a) *The National Archives and Records Administration seal.* The design is illustrated below in Figure 1 and described as follows:

(1) The seal is centered on a disc with a double-line border.

(2) The words ''NATIONAL ARCHIVES AND RECORDS ADMINISTRATION'' encircle the inside of the seal and the date 1985 is at the bottom center.

(3) A solid line rendition of a heraldic eagle displayed holding in its left talon 13 arrows, in its right talon a branch of olive, bearing on its breast a representation of the shield of the United States.

(4) Displayed above the eagle's head is a partially unrolled scroll inscribed with the words ''LITTERA SCRIPTA MANET'' one above the other.

Figure 1 – The National Archives and Records Administration Seal

(b) *National Archives seal.* The design is illustrated below and described as in paragraph (a) of this section. However, the words ''THE NATIONAL ARCHIVES OF THE UNITED STATES'' encircle the inside of the seal and the date 1934 is at the bottom center.

Figure 2 – The National Archives Seal

(c) *National Archives Trust Fund Board seal.* The design is illustrated below and described as in paragraph (a) of this section. However, the words ''NATIONAL ARCHIVES TRUST FUND BOARD'' encircle the inside of the seal and the date 1941 is at the bottom center.

Figure 3 – National Archives Trust Fund Board Seal

§ 1200.4 How does NARA use its official seals?

NARA uses its three official seals to authenticate various copies of documents and for informational purposes as follows:

(a) The National Archives and Records Administration seal, dated 1985, is used:

(1) For official business;

(2) To authenticate copies of Federal records in NARA's temporary custody and copies of NARA operational records; and

(3) For informational purposes with NARA's prior approval (includes use by NARA employees, the public, and other Federal agencies).

(b) The National Archives seal, dated 1934, is used to authenticate copies of documents in NARA's permanent legal custody.

(c) The National Archives Trust Fund Board seal, dated 1941, is used for Trust Fund documents and publications.

[67 FR 72101, Dec. 4, 2002, as amended at 76 FR 1524, Jan. 11, 2011]

§ 1200.6 Who is authorized to apply the official seals on documents or other materials?

The Archivist of the United States (and the Archivist's designee) is the only individual authorized to apply NARA official seals, embossing seals, and replicas and reproductions of seals to appropriate documents, authentications, and other material. NARA accepts requests to use the official seals and approves or denies them based on the criteria identified in § 1200.10.

§ 1200.7 What are NARA logos and how are they used?

(a) *Agency logo*. NARA has one official agency logo, which is illustrated as follows:

(b) The official agency logo is used:

(1) On agency letterhead and business cards;

(2) On all NARA web and social media sites (intranet and internet), whether hosted internally, remotely, or on a public forum (including sites on which a NARA office or program logo also appears);

(3) On exhibits;

(4) On publicity and other branding materials, and on items associated with a one-time or recurring NARA event or activity;

(5) On agency communications and presentations; and

(6) On other items as approved by the Archivist or his designee.

(c) The official agency logo does not replace NARA's official seals on other agency official business, such as certified records, the FEDERAL REGISTER, and authenticated copies.

(d) *Office and program logos.* NARA's official office and program logos include, but are not limited to, those illustrated as follows:

(1) The Federal Records Center Program;

(2) The National Historical Publications and Records Commission;

NHPRC
DOCUMENTING DEMOCRACY
National Historical Publications and Records Commission

(3) American Originals;

AMERICAN ORIGINALS

(4) Electronic Records Archives;

ERA
Electronic Records Archives

(5) The Archival Research Catalog;

(6) The Archives Library Information Center;

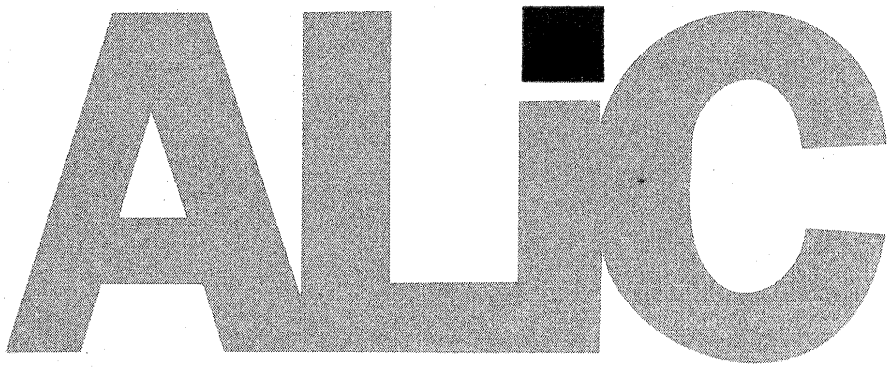

(7) Presidential Libraries;

(8) Federal Register publications.

(i) Electronic Code of Federal Regulations.

(ii) Regulations.gov and FedReg.gov Web sites.

(iii) FEDERAL REGISTER paper edition.

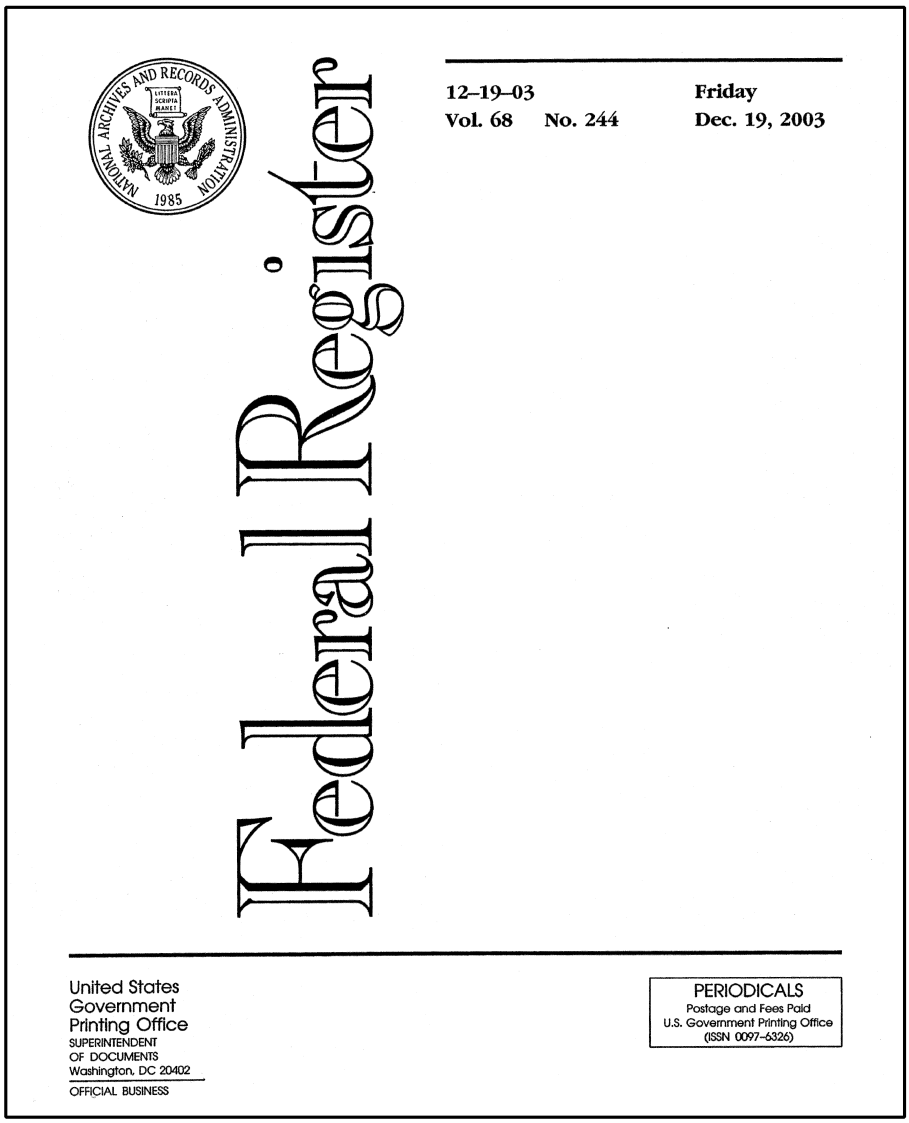

(iv) Code of Federal Regulations paper edition;

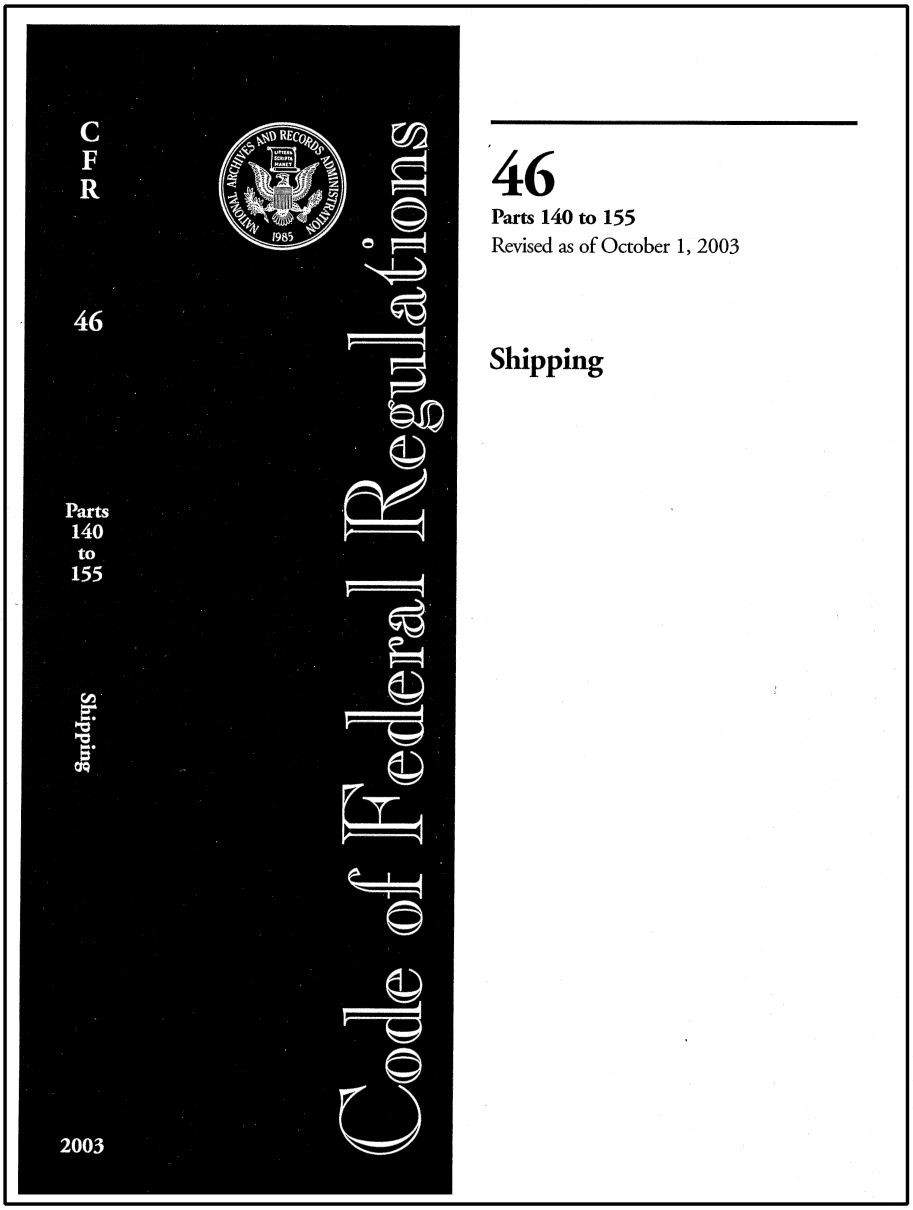

(9) Regional archives:
(i)

(ii) Each regional archives has the same logo design with the geographic location of the facility added.

(10) The Office of Government Information Services (OGIS);

(11) The Controlled Unclassified Information Office (CUI); and

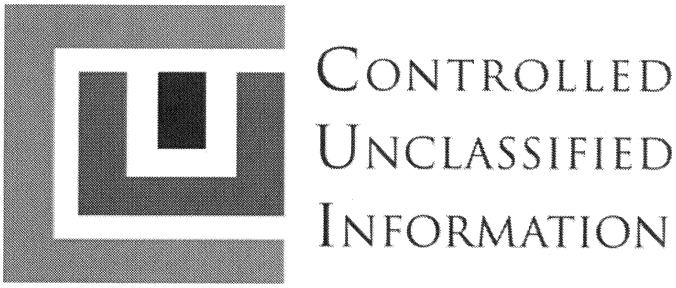

(12) The National Declassification Center (NDC).

NATIONAL
DECLASSIFICATION
CENTER

(e) *Other official NARA logos.* For inquiries on other official NARA logos, contact the Office of General Counsel (NGC). Send written inquiries to the Office of General Counsel (NGC), Room 3110, 8601 Adelphi Rd., College Park, MD 20740–6001.

(f) NARA uses its office, program, and other official logos (usually in conjunction with the agency logo) for official business, which includes, but is not limited to:

(1) Exhibits;

(2) Publicity and other materials associated with a one-time or recurring NARA event or activity;

(3) NARA Web sites (Intranet and Internet);

(4) Officially approved internal and external publications; and

(5) Presentations.

(g) *Use of logos by others.* NARA logos may be used by the public and other Federal agencies for events or activities co-sponsored by NARA, but only with the written approval of the Archivist or his designee. *See* Subpart C for procedures to request approval for use.

[69 FR 26046, May 11, 2004, as amended at 71 FR 26834, May 9, 2006; 75 FR 19556, Apr. 15, 2010; 76 FR 1524, Jan. 11, 2011]

Subpart C—Procedures for the Public To Request and Use NARA Seals and Logos

§ 1200.8 How do I request to use the official seals and logos?

You may only use the official seals and logos if NARA approves your written request. Follow the procedures in this section to request authorization.

(a) Prepare a written request explaining, in detail:

(1) The name of the individual/organization requesting use and how it is associated with NARA;

(2) Which of the official seals and/or logos you want to use and how each is going to be displayed. Provide a sample of the document or other material on which the seal(s) and/or logo(s) would appear, marking the sample in all places where the seal(s) and/or logo(s) would be displayed;

(3) How the intended use of the official seal(s) and/or logo(s) is connected to your work with NARA on an event or activity (example: requesting to use the official NARA seal(s) and/or logo(s) on a program brochure, poster, or other publicity announcing a co-sponsored symposium or conference.); and

(4) The dates of the event or activity for which you intend to display the seal(s) and/or logo(s).

(b) You must submit the request at least six weeks before you intend to use it to the Archivist of the United States (N), 8601 Adelphi Rd., College Park, MD 20740–6001.

(c) The OMB control number 3095–0052 has been assigned to the information collection contained in this section.

[67 FR 72101, Dec. 4, 2002, as amended at 69 FR 26051, May 11, 2004]

§ 1200.10 What are NARA's criteria for approval?

NARA's criteria for approval are as follows:

(a) NARA must be participating in the event or activity by providing speakers, space, or other similar services (example: NARA co-sponsoring a symposium or conference).

(b) Seals and logos will not be used on any article or in any manner that reflects unfavorably on NARA or endorses, either directly or by implication, commercial products or services, or a requestor's policies or activities.

[67 FR 72101, Dec. 4, 2002, as amended at 69 FR 26051, May 11, 2004]

§ 1200.12 How does NARA notify me of the determination?

NARA will notify you by mail of the final decision, usually within 3 weeks from the date we receive your request. If NARA approves your request, we will send you a camera-ready copy of the official seal(s) and/or logo(s) along with an approval letter that will:

(a) Reference back to the submitted request (either through the date or another distinguishing characteristic) indicating approval of the specific use, as defined in the request; and

(b) Include NARA's conditions for use, which are identified in § 1200.14.

[67 FR 72101, Dec. 4, 2002, as amended at 69 FR 26051, May 11, 2004]

§ 1200.14 What are NARA's conditions for the use of the official seals and logos?

If your request is approved, you must follow these conditions:

(a) Use the official seals and/or logos only for the specific purpose for which approval was granted;

(b) Submit additional written requests for any uses other than the use granted in the approval letter;

(c) Do not delegate the approval to another individual(s) or organization without NARA's prior approval; and

(d) Do not change the official seals and/or logos themselves. They must visually and physically appear as NARA originally designed them, with no alterations.

(e) Only use the official seal(s) and/or logo(s) for the time period designated in the approval letter (example: for the duration of a conference or exhibit).

[67 FR 72101, Dec. 4, 2002, as amended at 69 FR 26051, May 11, 2004]

Subpart D—Penalties for Misuse of NARA Seals and Logos

§ 1200.16 Will I be penalized for misusing the official seals and logos?

(a) *Seals.* (1) If you falsely make, forge, counterfeit, mutilate, or alter official seals, replicas, reproductions or embossing seals, or knowingly use or possess with fraudulent intent any altered seal, you are subject to penalties under 18 U.S.C. 506.

(2) If you use the official seals, replicas, reproductions, or embossing seals in a manner inconsistent with the provisions of this part, you are subject to penalties under 18 U.S.C. 1017 and to other provisions of law as applicable.

(b) *Logos.* If you use the official logos, replicas or reproductions, of logos in a manner inconsistent with the provisions of this part, you are subject to penalties under 18 U.S.C. 701.

[69 FR 26051, May 11, 2004]

PART 1201—COLLECTION OF CLAIMS

Subpart A—Introduction

Sec.
1201.1 Why is NARA issuing these regulations?
1201.2 Under what authority does NARA issue these regulations?
1201.3 What definitions apply to the regulations in this part?
1201.4 What types of claims are excluded from these regulations?
1201.5 If a claim is not excluded from these regulations, may it be compromised, suspended, terminated, or waived?
1201.6 What is a claim or debt?
1201.7 Why does NARA have to collect debts?
1201.8 What action might NARA take to collect debts?
1201.9 What rights do I have as a debtor?

Subpart B—General Provisions

1201.10 Will NARA use a cross-servicing agreement with the Department of the Treasury to collect its claims?
1201.11 Will NARA refer claims to the Department of Justice?
1201.12 Will NARA provide information to credit reporting agencies?
1201.13 How will NARA contract for collection services?
1201.14 What should I expect to receive from NARA if I owe a debt to NARA?
1201.15 What will the notice tell me regarding collection actions that might be taken if the debt is not paid within 60 days of the notice, or arrangements to pay the debt are not made within 60 days of the notice?
1201.16 What will the notice tell me about my opportunity for review of my debt?
1201.17 What must I do to obtain a review of my debt, and how will the review process work?
1201.18 What interest, penalty charges, and administrative costs will I have to pay on a debt owed to NARA?

1201.19 How can I resolve my debt through voluntary repayment?
1201.20 What is the extent of the Archivist's authority to compromise debts owed to NARA, or to suspend or terminate collection action on such debts?
1201.21 May NARA's failure to comply with these regulations be used as a defense to a debt?

Subpart C—Salary Offset

1201.30 What debts are included or excluded from coverage of these regulations on salary offset?
1201.31 May I ask NARA to waive an overpayment that otherwise would be collected by offsetting my salary as a Federal employee?
1201.32 What are NARA's procedures for salary offset?
1201.33 How will NARA coordinate salary offsets with other agencies?
1201.34 Under what conditions will NARA make a refund of amounts collected by salary offset?
1201.35 Will the collection of a claim by salary offset act as a waiver of my rights to dispute the claimed debt?

Subpart D—Tax Refund Offset

1201.40 Which debts can NARA refer to the Department of the Treasury for collection by offsetting tax refunds?
1201.41 What are NARA's procedures for collecting debts by tax refund offset?

Subpart E—Administrative Offset

1201.50 Under what circumstances will NARA collect amounts that I owe to NARA (or some other Federal agency) by offsetting the debt against payments that NARA (or some other Federal agency) owes me?
1201.51 How will NARA request that my debt to NARA be collected by offset against some payment that another Federal agency owes me?
1201.52 What procedures will NARA use to collect amounts I owe to a Federal agency by offsetting a payment that NARA would otherwise make to me?
1201.53 When may NARA make an offset in an expedited manner?
1201.54 Can a judgment I have obtained against the United States be used to satisfy a debt that I owe to NARA?

Subpart F—Administrative Wage Garnishment

1201.55 How will NARA collect debts through Administrative Wage Garnishment?

AUTHORITY: 5 U.S.C. 5514; 31 U.S.C. 3701–3720A, 3720D; 44 U.S.C. 2104(a).

SOURCE: 67 FR 44757, July 5, 2002, unless otherwise noted.

Subpart A—Introduction

§ 1201.1 Why is NARA issuing these regulations?

(a) NARA is issuing these regulations to inform the public of procedures that may be used by NARA for the collection of debt.

(b) These regulations provide that NARA will attempt to collect debts owed to it or other Government agencies either directly, or by other means including salary, administrative, tax refund offsets, or administrative wage garnishment.

(c) These regulations also provide that NARA may enter a cross-servicing agreement with the U.S. Department of the Treasury (Treasury) under which the Treasury will take authorized action to collect amounts owed to NARA.

§ 1201.2 Under what authority does NARA issue these regulations?

(a) NARA is issuing the regulations in this part under the authority of 31 U.S.C. Chapter 37, 3701–3720A and 3720D. These sections implement the requirements of the Federal Claims Collection Act of 1966, as amended by the Debt Collection Act of 1982 and the Debt Collection Improvement Act of 1996.

(b) NARA is also issuing the regulations in this part to conform to the Federal Claims Collection Standards (FCCS), which prescribe standards for handling the Federal Government's claims for money or property. The FCCS are issued by the Department of Justice (DOJ) and the Treasury at 31 CFR Chapter IX, Parts 900–904. NARA adopts those standards without change. The regulations in this part supplement the FCCS by prescribing procedures necessary and appropriate for NARA operations.

(c) NARA is also issuing the regulations in this part to conform to the standards for handling Administrative Wage Garnishment processing by the Federal Government. The standards are issued by the Treasury at 31 CFR 285.11. NARA adopts those standards without change. The regulations in

this part supplement the standards by prescribing procedures necessary and appropriate for NARA operations.

(d) NARA is further issuing the regulations in this part under the authority of 5 U.S.C. 5514, and the salary offset regulations published by the Office of Personnel and Management at 5 CFR part 550, subpart K.

(e) All of these claims collection regulations are issued under NARA's authority under 44 U.S.C. 2104(a).

§ 1201.3 What definitions apply to the regulations in this part?

As used in this part:

Administrative offset means withholding funds payable by the United States (including funds payable by the United States on behalf of a State government) to, or held by the United States for, a person to satisfy a claim.

Administrative Wage Garnishment means a process whereby a Federal agency may, without first obtaining a court order, order an employer to withhold up to 15 percent of your wages for payment to the Federal agency to satisfy a delinquent non-tax debt.

Agency means a department, agency, court, court administrative office, or instrumentality in the executive, judicial, or legislative branch of government, including a government corporation.

Archivist means the Archivist of the United States, or his or her designee.

Certification means a written statement received by a paying agency or disbursing official from a creditor agency that requests the paying agency or disbursing official to offset the salary of an employee and specifies that required procedural protections have been afforded the employee.

Claim (*see* definition of debt in this section).

Compromise means the settlement or forgiveness of a debt.

Creditor agency means the agency to which the debt is owed, including a debt collection center when acting on behalf of the creditor agency.

Day means calendar day. To count days, include the last day of the period unless it is a Saturday, a Sunday, or a Federal legal holiday.

Debt collection center means the Treasury or any other agency or division designated by the Secretary of the Treasury with authority to collect debts on behalf of creditor agencies.

Debt and *claim* are deemed synonymous and interchangeable. These terms mean an amount of money, funds, or property that has been determined by an agency official to be due the United States from any person, organization, or entity except another Federal agency. For the purpose of administrative offset under 31 U.S.C. 3716 and subpart E of these regulations, the terms, ''debt'' and ''claim'' also include money, funds or property owed by a person to a State (including past-due support being enforced by a State); the District of Columbia; American Samoa; Guam; the United States Virgin Islands; the Commonwealth of the Northern Marina Islands; or the Commonwealth of Puerto Rico.

Debtor means a person, organization, or entity, except another Federal agency, who owes a debt. Use of the terms ''I,'' ''you,'' ''me,'' and similar references to the reader of the regulations in this part are meant to apply to debtors as defined in this paragraph.

Delinquent debt means a debt that has not been paid by the date specified in NARA's initial written demand for payment or applicable agreement or instrument (including a post-delinquency payment agreement), unless other satisfactory payment arrangements have been made.

Disposable pay means the part of an employee's pay that remains after deductions that are required to be withheld by law have been made.

Employee means a current employee of an agency, including a current member of the Armed Forces or Reserve of the Armed Forces of the United States.

Federal Claims Collection Standards (FCCS) means the standards currently published by DOJ and the Treasury at 31 CFR parts 900–904.

NARA means the National Archives and Records Administration.

Paying agency means any agency that is making payments of any kind to a debtor. In some cases, NARA may be both the creditor agency and the paying agency.

Payroll office means the office that is primarily responsible for payroll records and the coordination of pay

matters with the appropriate personnel office.

Person includes a natural person or persons, profit or non-profit corporation, partnership, association, trust, estate, consortium, state or local government, or other entity that is capable of owing a debt to the United States; however, agencies of the United States are excluded.

Private collection contractor means a private debt collector under contract with an agency to collect a non-tax debt owed to the United States.

Salary offset means a payroll procedure to collect a debt under 5 U.S.C. 5514 and 31 U.S.C. 3716 by deduction(s) at one or more officially established pay intervals from the current pay account of an employee, without his or her consent.

Tax refund offset means the reduction of a tax refund by the amount of a past-due legally enforceable debt owed to NARA or any other Federal agency.

Waiver means the cancellation, remission, forgiveness, or non-recovery of a debt.

Withholding order means any order for withholding or garnishment of pay issued by an agency, or judicial or administrative body.

§ 1201.4 What types of claims are excluded from these regulations?

The following types of claims are excluded:

(a) Debts or claims arising under the Internal Revenue Code (26 U.S.C. 1 *et seq.*) or the tariff laws of the United States, or the Social Security Act (42 U.S.C. 301 *et seq.*); except as provided under sec. 204(f) and 1631 (42 U.S.C. 404(f) and 1383(b)(4)(A)).

(b) Any case to which the Contract Disputes Act (41 U.S.C. 601 *et seq.*) applies;

(c) Any case where collection of a debt is explicitly provided for or provided by another statute, e.g., travel advances under 5 U.S.C. 5705 and employee training expenses under 5 U.S.C. 4108, or, as provided for by title 11 of the United States Code, when the claims involve bankruptcy;

(d) Any debt based in whole or in part on conduct in violation of the antitrust laws or involving fraud, the presentation of a false claim, or misrepresentation on the part of the debtor or any party having an interest in the claim, as described in the FCCS, unless DOJ authorizes NARA to handle the collection;

(e) Claims between Federal agencies;

(f) Unless otherwise provided by law, administrative offset of payments under the authority of 31 U.S.C. 3716 to collect a debt may not be initiated more than 10 years after the Government's right to collect the debt first accrued. (Exception: The 10-year limit does not apply if facts material to the Federal Government's right to collect the debt were not known and could not reasonably have been known by the official or officials of the Government who were charged with the responsibility to discover and collect such debts.) The 10-year limitation also does not apply to debts reduced to a judgement; and

(g) Unless otherwise stated, claims which have been transferred to Treasury or referred to the Department of Justice will be collected in accordance with the procedures of those agencies.

§ 1201.5 If a claim is not excluded from these regulations, may it be compromised, suspended, terminated, or waived?

Nothing in this part precludes:

(a) The compromise, suspension, or termination of collection actions, where appropriate under the FCCS, or the use of alternative dispute resolution methods if they are consistent with applicable law and regulations.

(b) An employee from requesting waiver of an erroneous payment under 5 U.S.C. 5584, 10 U.S.C. 2774, or 32 U.S.C. 716, or from questioning the amount or validity of a debt, in the manner set forth in this part.

§ 1201.6 What is a claim or debt?

A claim or debt is an amount of money, funds, or property that has been determined by an agency official to be due the United States from any person, organization, or entity except another Federal agency (*see* § 1201.3).

§ 1201.7 Why does NARA have to collect debts?

Federal agencies are required to try to collect claims of the Federal Government for money, funds, or property arising out of the agency's activities.

§ 1201.8 What action might NARA take to collect debts?

(a) There are a number of actions that NARA is permitted to take when attempting to collect debts. These actions include:

(1) Salary, tax refund or administrative offset, or administrative wage garnishment (*see* subparts C, D, E, and F of this part respectively); or

(2) Using the services of private collection contractors.

(b) In certain instances, usually after collection efforts have proven unsuccessful, NARA transfers debts to the Treasury for collection or refers them to the DOJ for litigation (*see* §§ 1201.10 and 1201.11).

§ 1201.9 What rights do I have as a debtor?

As a debtor you have several basic rights. You have a right to:

(a) Notice as set forth in these regulations (*see* § 1201.14);

(b) Inspect the records that NARA has used to determine that you owe a debt (*see* § 1201.14);

(c) Request review of the debt and possible payment options (*see* § 1201.17);

(d) Propose a voluntary repayment agreement (*see* § 1201.19); and/or

(e) Question if the debt is excluded from these regulations (*see* § 1201.5(b)).

Subpart B—General Provisions.

§ 1201.10 Will NARA use a cross-servicing agreement with the Department of the Treasury to collect its claims?

(a) NARA may enter into a cross-servicing agreement that authorizes the Treasury to take the collection actions described in this part on behalf of NARA. This agreement will describe procedures that the Treasury uses to collect debts. The debt collection procedures that the Treasury uses are based on 31 U.S.C. chapter 37.

(b) NARA must transfer to the Treasury any debt that has been delinquent for a period of 180 days or more so that the Secretary of the Treasury may take appropriate action to collect the debt or terminate collection action. NARA may also transfer to the Treasury any debt that is less than 180 days delinquent.

(c) Paragraph (b) of this section will not apply to any debt or claim that:

(1) Is in litigation or foreclosure;

(2) Will be disposed of under an approved asset sales program;

(3) Has been referred to a private collection contractor for collection for a period of time acceptable to the Secretary of the Treasury;

(4) Is at a debt collection center for a period of time acceptable to the Secretary of the Treasury;

(5) Will be collected under internal offset procedures within 3 years after the date the debt or claim is first delinquent; or

(6) Is exempt from this requirement based on a determination by the Secretary of the Treasury.

§ 1201.11 Will NARA refer claims to the Department of Justice?

NARA will refer to DOJ for litigation claims on which aggressive collection actions have been taken, but which could not be collected, compromised, suspended, or terminated. Referrals will be made as early as possible, consistent with aggressive NARA collection action, and within the period for bringing a timely suit against the debtor.

§ 1201.12 Will NARA provide information to credit reporting agencies?

(a) NARA will report certain delinquent debts to appropriate consumer credit reporting agencies by providing the following information:

(1) A statement that the debt is valid and overdue;

(2) The name, address, taxpayer identification number, and any other information necessary to establish the identity of the debtor;

(3) The amount, status, and history of the debt; and

(4) The program or pertinent activity under which the debt arose.

(b) Before disclosing debt information to a credit reporting agency, NARA:

(1) Takes reasonable action to locate the debtor if a current address is not available;

(2) Provides the notice required under § 1201.14 if a current address is available; and

(3) Obtains satisfactory assurances from the credit reporting agency that it complies with the Fair Credit Reporting Act (15 U.S.C. 1681 *et seq.*) and other Federal laws governing the provision of credit information.

(c) At the time debt information is submitted to a credit reporting agency, NARA provides a written statement to the reporting agency that all required actions have been taken. In addition, NARA thereafter ensures that the credit reporting agency is promptly informed of any substantive change in the conditions or amount of the debt, and promptly verifies or corrects information relevant to the debt.

(d) If a debtor disputes the validity of the debt, the credit reporting agency refers the matter to the appropriate NARA official. The credit reporting agency excludes the debt from its reports until NARA certifies in writing that the debt is valid.

(e) NARA may disclose to a commercial credit bureau information concerning a commercial debt, including the following:

(1) Information necessary to establish the name, address, and employer identification number of the commercial debtor;

(2) The amount, status, and history of the debt; and

(3) The program or pertinent activity under which the debt arose.

§ 1201.13 How will NARA contract for collection services?

NARA uses the services of a private collection contractor where it determines that such use is in NARA's best interest. When NARA determines that there is a need to contract for collection services, NARA:

(a) Retains sole authority to:

(1) Resolve any dispute with the debtor regarding the validity of the debt;

(2) Compromise the debt;

(3) Suspend or terminate collection action;

(4) Refer the debt to the DOJ for litigation; and

(5) Take any other action under this part;

(b) Requires the contractor to comply with the:

(1) Privacy Act of 1974, as amended, to the extent specified in 5 U.S.C. 552a(m);

(2) Fair Debt Collection Practices Act (15 U.S.C. 1692–1692o); and

(3) Other applicable Federal and State laws pertaining to debt collection practices and applicable regulations of NARA in this part;

(c) Requires the contractor to account accurately and fully for all amounts collected; and

(d) Requires the contractor to provide to NARA, upon request, all data and reports contained in its files related to its collection actions on a debt.

§ 1201.14 What should I expect to receive from NARA if I owe a debt to NARA?

(a) NARA will send you a written notice when we determine that you owe a debt to NARA. The notice will be hand-delivered or sent to you at the most current address known to NARA. The notice will inform you of the following:

(1) The amount, nature, and basis of the debt;

(2) That a designated NARA official has reviewed the claim and determined that it is valid;

(3) That payment of the debt is due as of the date of the notice, and that the debt will be considered delinquent if you do not pay it within 30 days of the date of the notice;

(4) NARA's policy concerning interest, penalty charges, and administrative costs (*see* § 1201.18), including a statement that such assessments must be made against you unless excused in accordance with the FCCS and this part;

(5) That you have the right to inspect and copy disclosable NARA records pertaining to your debt, or to receive copies of those records if personal inspection is impractical;

(6) That you have the opportunity to enter into an agreement, in writing and signed by both you and the designated NARA official, for voluntary repayment of the debt (*see* § 1201.19);

(7) The address, telephone number, and name of the NARA official available to discuss the debt;

(8) Possible collection actions that might be taken if the debt is not paid within 60 days of the notice, or arrangements to pay the debt are not made within 60 days of the notice (*see* § 1201.15 for a fuller description of possible actions);

(9) That NARA may suspend or revoke any licenses, permits, or other privileges for failure to pay a debt; and

(10) Information on your opportunity to obtain a review of the debt (*see* § 1201.16).

(b) NARA will respond promptly to communications from you.

(c) Exception to entitlement to notice, hearing, written responses, and final decisions. With respect to the regulations covering internal salary offset collections (*see* § 1230.32), NARA excepts from the provisions of paragraph (a) of this section—

(1) Any adjustment to pay arising out of an employee's election of coverage or a change in coverage under a Federal benefits program requiring periodic deductions from pay, if the amount to be recovered was accumulated over 4 pay periods or less;

(2) A routine intra-agency adjustment of pay that is made to correct an overpayment of pay attributable to clerical or administrative errors or delays in processing pay documents, if the overpayment occurred within the 4 pay periods preceding the adjustment and, at the time of such adjustment, or as soon thereafter as practical, the individual is provided written notice of the nature and the amount of the adjustment and point of contact for contesting such adjustment; or

(3) Any adjustment to collect a debt amounting to $50 or less, if, at the time of such adjustment, or as soon thereafter as practical, the individual is provided written notice of the nature and the amount of the adjustment and a point of contact for contesting such adjustment.

§ 1201.15 What will the notice tell me regarding collection actions that might be taken if the debt is not paid within 60 days of the notice, or arrangements to pay the debt are not made within 60 days of the notice?

The notice provided under § 1201.14 will advise you that within 60 days of the date of the notice, your debt (including any interest, penalty charges, and administrative costs) must be paid or you must enter into a voluntary repayment agreement. If you do not pay the debt or enter into the agreement within that deadline, NARA may enforce collection of the debt by any or all of the following methods:

(a) By referral to a credit reporting agency (*see* § 1201.12), private collection contractor (*see* § 1201.13), or the DOJ (*see* § 1201.11).

(b) By transferring any debt to the Treasury for collection, including under a cross-servicing agreement with the Treasury (*see* § 1201.10).

(c) If you are a NARA employee, by deducting money from your disposable pay account until the debt (and all accumulated interest, penalty charges, and administrative costs) is paid in full (*see* subpart C of this part). NARA will specify the amount, frequency, approximate beginning date, and duration of the deduction. 5 U.S.C. 5514 and 31 U.S.C. 3716 govern such proceedings;

(d) If you are an employee of a Federal agency other than NARA, by initiating certification procedures to implement a salary offset by that Federal agency (*see* subpart C of this part). 5 U.S.C. 5514 governs such proceedings;

(e) By referring the debt to the Treasury for offset against any refund of overpayment of tax (*see* subpart D of this part);

(f) By administrative offset (*see* subpart E of this part);

(g) By administrative wage garnishment (*see* subpart F of this part); or

(h) By liquidation of security or collateral. NARA has the right to hold security or collateral, liquidate it, and apply the proceeds to your debt through the exercise of a power of sale in the security instrument or a foreclosure. NARA will not follow the procedures in this paragraph (h) if the cost

of disposing the collateral will be disproportionate to its value.

§ 1201.16 What will the notice tell me about my opportunity for review of my debt?

The notice provided by NARA under §§ 1201.14 and 1201.15 will also advise you of the opportunity to obtain a review within NARA concerning the existence or amount of the debt or the proposed schedule for offset of Federal employee salary payments. The notice will also advise you of the following:

(a) The name, address, and telephone number of a NARA official whom you may contact concerning procedures for requesting a review;

(b) The method and time period for requesting a review;

(c) That the filing of a request for a review on or before the 60th day following the date of the notice will stay the commencement of collection proceedings;

(d) The name and address of the NARA official to whom you should send the request for a review;

(e) That a final decision on the review (if one is requested) will be issued in writing at the earliest practical date, but not later than 60 days after the receipt of the request for a review, unless you request, and the review official grants, a delay in the proceedings;

(f) That any knowingly false or frivolous statements, representations, or evidence may subject you to:

(1) Disciplinary procedures appropriate under 5 U.S.C. Chapter 75, 5 CFR part 752, or any other applicable statute or regulations;

(2) Penalties under the False Claims Act (31 U.S.C. 3729–3733) or any other applicable statutory authority; and

(3) Criminal penalties under 18 U.S.C. 286, 287, 1001, and 1002, or any other applicable statutory authority;

(g) Any other rights available to you to dispute the validity of the debt or to have recovery of the debt waived, or remedies available to you under statutes or regulations governing the program for which the collection is being made; and

(h) That unless there are applicable contractual or statutory provisions to the contrary, amounts paid on or deducted for the debt that are later waived or found not owed will be promptly refunded to you.

§ 1201.17 What must I do to obtain a review of my debt, and how will the review process work?

(a) *Request for review.* (1) You have the right to request a review by NARA of the existence or amount of your debt, the proposed schedule for offset of Federal employee salary payments, or whether the debt is past due or legally enforceable. If you want a review, you must send a written request to the NARA official designated in the notice (*see* § 1201.16(d)).

(2) You must sign your request for review and fully identify and explain with reasonable specificity all the facts, evidence, and witnesses that support your position. Your request for review should be accompanied by available evidence to support your contentions.

(3) Your request for review must be received by the designated officer or employee of NARA on or before the 60th calendar day following the date of the notice. Timely filing will stay the commencement of collection procedures. NARA may consider requests filed after the 60-day period provided for in this section if you:

(i) Can show that the delay was the result of circumstances beyond your control; or

(ii) Did not receive notice of the filing deadline (unless you had actual notice of the filing deadline).

(b) *Inspection of NARA records related to the debt.* (1) If you want to inspect or copy NARA records related to the debt (*see* § 1201.14(a)(5)), you must send a letter to the NARA official designated in the notice. Your letter must be received within 30 days of the date of the notice.

(2) In response to the timely request described in paragraph (b)(1) of this section, the designated NARA official will notify you of the location and time when you may inspect and copy records related to the debt.

(3) If personal inspection of NARA records related to the debt is impractical, reasonable arrangements will be made to send you copies of those records.

(c) *Review official.* (1) When required by Federal law or regulation, such as in a salary offset situation, NARA will request an administrative law judge, or hearing official from another agency who is not under the supervision or control of the Archivist, to conduct the review. In these cases, the hearing official will, following the review, submit the review decision to the Archivist for the issuance of NARA's final decision (*see* paragraph (f) of this section for content of the review decision).

(2) When Federal law or regulation does not require NARA to have the review conducted by an administrative law judge, or by a hearing official from another agency who is not under the supervision or control of the Archivist, NARA has the right to appoint a hearing official to conduct the review. In these cases, the hearing official will, following the review, submit the review decision to the Archivist for the issuance of NARA's final decision (*see* paragraph (f) of this section for the content of the review decision).

(d) *Review procedure.* If you request a review, the review official will notify you of the form of the review to be provided. The review official will determine whether an oral hearing is required, or if a review of the written record is sufficient, in accordance with the FCCS. Although you may request an oral hearing, such a hearing is required only when a review of the documentary evidence cannot determine the question of indebtedness, such as when the validity of the debt turns on an issue of credibility or truthfulness. In either case, the review official will conduct the review in accordance with the FCCS. If the review will include an oral hearing, the notice sent to you by the review official will set forth the date, time, and location of the hearing.

(e) *Date of decision.* (1) The review official will issue a written decision, based upon either the written record or documentary evidence and information developed at an oral hearing. This decision will be issued as soon as practical, but not later than 60 days after the date on which NARA received your request for a review, unless you request, and the review official grants, a delay in the proceedings.

(2) If NARA is unable to issue a decision within 60 days after the receipt of the request for a hearing:

(i) NARA may not issue a withholding order or take other action until the hearing (in whatever form) is held and a decision is rendered; and

(ii) If NARA previously issued a withholding order to the debtor's employer, NARA must suspend the withholding order beginning on the 61st day after the receipt of the hearing request and continuing until a hearing (in whatever form) is held and a decision is rendered.

(f) *Content of review decision.* The review official will prepare a written decision that includes:

(1) A statement of the facts presented to support the origin, nature, and amount of the debt;

(2) The review official's findings, analysis, and conclusions; and

(3) The terms of any repayment schedule, if applicable.

(g) *Interest, penalty charge, and administrative cost accrual during review period.* Interest, penalty charges, and administrative costs authorized by law will continue to accrue during the review period.

§ 1201.18 What interest, penalty charges, and administrative costs will I have to pay on a debt owed to NARA?

(a) *Interest.* (1) NARA will assess interest on all delinquent debts unless prohibited by statute, regulation, or contract.

(2) Interest begins to accrue on all debts from the date that the debt becomes delinquent. NARA will not recover interest if you pay the debt within 30 days of the date on which interest begins to accrue. NARA will assess interest at the rate established annually by the Secretary of the Treasury under 31 U.S.C. 3717, unless a different rate is either necessary to protect the interests of NARA or established by a contract, repayment agreement, or statute. NARA will notify you of the basis for its finding when a different rate is necessary to protect the interests of NARA.

(3) The Archivist may extend the 30-day period for payment without interest where he or she determines that such action is in the best interest of

NARA. A decision to extend or not to extend the payment period is final and is not subject to further review.

(b) *Penalty*. NARA will assess a penalty charge of 6 percent a year on any portion of a debt that is delinquent for more than 90 days.

(c) *Administrative costs*. NARA will assess charges to cover administrative costs incurred as a result of your failure to pay a debt before it becomes delinquent. Administrative costs include the additional costs incurred in processing and handling the debt because it became delinquent, such as costs incurred in obtaining a credit report or in using a private collection contractor, or service fees charged by a Federal agency for collection activities undertaken on behalf of NARA.

(d) *Allocation of payments*. A partial or installment payment by a debtor will be applied first to outstanding penalty assessments, second to administrative costs, third to accrued interest, and fourth to the outstanding debt principal.

(e) *Additional authority*. NARA may assess interest, penalty charges, and administrative costs on debts that are not subject to 31 U.S.C. 3717 to the extent authorized under common law or other applicable statutory authority.

(f) *Waiver*. (1) The Archivist may (without regard to the amount of the debt) waive collection of all or part of accrued interest, penalty charges, or administrative costs, if he or she determines that collection of these charges would be against equity and good conscience or not in the best interest of NARA.

(2) A decision to waive interest, penalty charges, or administrative costs may be made at any time before a debt is paid. However, and unless otherwise stated in these regulations, where these charges have been collected before the waiver decision, they will not be refunded. The Archivist's decision to waive or not waive collection of these charges is final and is not subject to further review.

§ 1201.19 How can I resolve my debt through voluntary repayment?

(a) In response to a notice of debt, you may propose to NARA that you be allowed to repay the debt through a voluntary repayment agreement in lieu of NARA taking other collection actions under this part.

(b) Your request to enter into a voluntary repayment agreement must:

(1) Be in writing;

(2) Admit the existence of the debt; and

(3) Either propose payment of the debt (together with interest, penalty charges, and administrative costs) in a lump sum, or set forth a proposed repayment schedule.

(c) NARA will collect claims in one lump sum whenever feasible. However, if you are unable to pay your debt in one lump sum, NARA may accept payment in regular installments that bear a reasonable relationship to the size of the debt and your ability to pay.

(d) NARA will consider a request to enter into a voluntary repayment agreement in accordance with the FCCS. The Archivist may request additional information from you, including financial statements if you request to make payments in installments, in order to determine whether to accept a voluntary repayment agreement. It is within the Archivist's discretion to accept a repayment agreement instead of proceeding with other collection actions under this part, and to set the necessary terms of any voluntary repayment agreement. No repayment agreement will be binding on NARA unless it is in writing and signed by both you and the Archivist. At NARA's option, you may be required to provide security as part of the agreement to make payments in installments. Notwithstanding the provisions of this section, 31 U.S.C. 3711 will govern any reduction or compromise of a claim.

§ 1201.20 What is the extent of the Archivist's authority to compromise debts owed to NARA, or to suspend or terminate collection action on such debts?

(a) The Archivist may compromise, suspend, or terminate collection action on those debts owed to NARA that do not exceed $100,000 excluding interest, in conformity with the Federal Claims Collection Act of 1966, as amended. NARA will follow the policies in § 902.2 of the FCCS.

(b) The uncollected portion of a debt owed to NARA that is not recovered as

the result of a compromise will be reported to the Internal Revenue Service (IRS) as income to the debtor in accordance with IRS procedures if the debt is at least $600.00.

§ 1201.21 May NARA's failure to comply with these regulations be used as a defense to a debt?

No, the failure of NARA to comply with any standard in the FCCS or these regulations will not be available to any debtor as a defense.

Subpart C—Salary Offset

§ 1201.30 What debts are included or excluded from coverage of these regulations on salary offset?

(a) The regulations in this subpart provide NARA procedures for the collection by salary offset of a Federal employee's pay to satisfy certain debts owed to NARA or to other Federal agencies.

(b) The regulations in this subpart do not apply to any case where collection of a debt by salary offset is explicitly provided for or prohibited by another statute.

(c) Nothing in the regulations in this subpart precludes the compromise, suspension, or termination of collection actions under the Federal Claims Collection Act of 1966, as amended, or the FCCS.

(d) A levy imposed under the Internal Revenue Code takes precedence over a salary offset under this subpart, as provided in 5 U.S.C. 5514(d).

§ 1201.31 May I ask NARA to waive an overpayment that otherwise would be collected by offsetting my salary as a Federal employee?

Yes, the regulations in this subpart do not preclude you from requesting waiver of an overpayment under 5 U.S.C. 5584 or 8346(b), 10 U.S.C. 2774, 32 U.S.C. 716, or other statutory provisions pertaining to the particular debts being collected.

§ 1201.32 What are NARA's procedures for salary offset?

(a) NARA will coordinate salary deductions under this subpart as appropriate.

(b) If you are a NARA employee who owes a debt to NARA, NARA's payroll office will determine the amount of your disposable pay and will implement the salary offset.

(c) Deductions will begin within three official pay periods following receipt by NARA's payroll office of certification of debt from the creditor agency.

(d) The Notice provisions of these regulations do not apply to certain debts arising under this section (*see* § 1201.14(c)).

(e) Types of collection. (1) *Lump-sum offset*. If the amount of the debt is equal to or less than 15 percent of disposable pay, the debt generally will be collected through one lump-sum offset.

(2) *Installment deductions*. Installment deductions will be made over a period not greater than the anticipated period of employment. The size and frequency of installment deductions will bear a reasonable relation to the size of the debt and your ability to pay. However, the amount deducted from any period will not exceed 15 percent of the disposable pay from which the deduction is made unless you have agreed in writing to the deduction of a greater amount. If possible, installment payments will be sufficient in size and frequency to liquidate the debt in three years or less.

(3) *Deductions from final check*. A deduction exceeding the 15 percent of disposable pay limitation may be made from any final salary payment under 31 U.S.C. 3716 and the FCCS in order to liquidate the debt, whether the employee is being separated voluntarily or involuntarily.

(4) *Deductions from other sources*. If an employee subject to salary offset is separated from NARA and the balance of the debt cannot be liquidated by offset of the final salary check, NARA may offset later payments of any kind against the balance of the debt, as allowed by 31 U.S.C. 3716 and the FCCS.

(f) *Multiple debts*. In instances where two or more creditor agencies are seeking salary offsets, or where two or more debts are owed to a single creditor agency, NARA's payroll office may, at its discretion, determine whether one or more debts should be

offset simultaneously within the 15 percent limitation.

§ 1201.33 How will NARA coordinate salary offsets with other agencies?

(a) *Responsibilities of NARA as the creditor agency (i.e. when the debtor owes a debt to NARA and is an employee of another agency).* Upon completion of the procedures established in this subpart and pursuant to 5 U.S.C. 5514 and 31 U.S.C. 3716, NARA must submit a claim to a paying agency or disbursing official.

(1) In its claim, NARA must certify, in writing, the following:

(i) That the employee owes the debt;

(ii) The amount and basis of the debt;

(iii) The date NARA's right to collect the debt first accrued;

(iv) That NARA's regulations in this subpart have been approved by OPM under 5 CFR part 550, subpart K; and

(v) That NARA has met the certification requirements of the paying agency.

(2) If the collection must be made in installments, NARA's claim will also advise the paying agency of the amount or percentage of disposable pay to be collected in each installment. NARA may also advise the paying agency of the number of installments to be collected and the date of the first installment, if that date is other than the next officially established pay period.

(3) NARA will also include in its claim:

(i) The employee's written consent to the salary offset;

(ii) The employee's signed statement acknowledging receipt of the procedures required by 5 U.S.C. 5514; or

(iii) Information regarding the completion of procedures required by 5 U.S.C. 5514, including the actions taken and the dates of those actions.

(4) If the employee is in the process of separating and has not received a final salary check or other final payment(s) from the paying agency, NARA must submit its claim to the paying agency or disbursing official for collection under 31 U.S.C. 3716. The paying agency will (under its regulations adopted under 5 U.S.C. 5514 and 5 CFR part 550, subpart K), certify the total amount of its collection on the debt and notify the employee and NARA. If the paying agency's collection does not fully satisfy the debt, and the paying agency is aware that the debtor is entitled to payments from the Civil Service Retirement and Disability Fund or other similar payments that may be due the debtor employee from other Federal government sources, then (under its regulations adopted under 5 U.S.C. 5514 and 5 CFR part 550, subpart K), the paying agency will provide written notice of the outstanding debt to the agency responsible for making the other payments to the debtor employee. The written notice will state that the employee owes a debt, the amount of the debt, and that the provisions of this section have been fully complied with. However, NARA must submit a properly certified claim under this paragraph (a)(4) to the agency responsible for making the other payments before the collection can be made.

(5) If the employee is already separated and all payments due from his or her former paying agency have been paid, NARA may request, unless otherwise prohibited, that money due and payable to the employee from the Civil Service Retirement and Disability Fund or other similar funds be administratively offset to collect the debt.

(6) *Employee transfer.* When an employee transfers from one paying agency to another paying agency, NARA will not repeat the due process procedures described in 5 U.S.C. 5514 and this subpart to resume the collection. NARA will submit a properly certified claim to the new paying agency and will subsequently review the debt to ensure that the collection is resumed by the new paying agency.

(b) *Responsibilities of NARA as the paying agency (i.e. when the debtor owes a debt to another agency and is an employee of NARA).* (1) Complete claim. When NARA receives a certified claim from a creditor agency (under the creditor agency's regulations adopted under 5 U.S.C. 5514 and 5 CFR part 550, subpart K), deductions should be scheduled to begin within three officially established pay intervals. Before deductions can begin, NARA sends the employee a written notice containing:

(i) A statement that NARA has received a certified claim from the creditor agency;

(ii) The amount of the claim;

(iii) The date salary offset deductions will begin; and

(iv) The amount of such deductions.

(2) Incomplete claim. When NARA receives an incomplete certification of debt from a creditor agency, NARA will return the claim with a notice that the creditor agency must:

(i) Comply with the procedures required under 5 U.S.C. 5514 and 5 CFR part 550, subpart K, and

(ii) Properly certify a claim to NARA before NARA will take action to collect from the employee's current pay account.

(3) NARA is not authorized to review the merits of the creditor agency's determination with respect to the amount or validity of the debt certified by the creditor agency.

(4) Employees who transfer from NARA to another paying agency. If, after the creditor agency has submitted the claim to NARA, the employee transfers from NARA to a different paying agency before the debt is collected in full, NARA will certify the total amount collected on the debt and notify the employee and the creditor agency in writing. The notification to the creditor agency will include information on the employee's transfer.

§ 1201.34 Under what conditions will NARA make a refund of amounts collected by salary offset?

(a) If NARA is the creditor agency, it will promptly refund any amount deducted under the authority of 5 U.S.C. 5514, when:

(1) The debt is waived or all or part of the funds deducted are otherwise found not to be owed (unless expressly prohibited by statute or regulation); or

(2) An administrative or judicial order directs NARA to make a refund.

(b) Unless required or permitted by law or contract, refunds under this section will not bear interest.

§ 1201.35 Will the collection of a claim by salary offset act as a waiver of my rights to dispute the claimed debt?

No, your involuntary payment of all or any portion of a debt under this subpart will not be construed as a waiver of any rights that you may have under 5 U.S.C. 5514 or other provisions of a law or written contract, unless there are statutory or contractual provisions to the contrary.

Subpart D—Tax Refund Offset

§ 1201.40 Which debts can NARA refer to the Treasury for collection by offsetting tax refunds?

(a) The regulations in this subpart implement 31 U.S.C. 3720A, which authorizes the Treasury to reduce a tax refund by the amount of a past-due, legally enforceable debt owed to a Federal agency.

(b) For purposes of this section, a past-due, legally enforceable debt referrable to the Treasury for tax refund offset is a debt that is owed to NARA and:

(1) Is at least $25.00;

(2) Except in the case of a judgment debt, has been delinquent for at least three months and will not have been delinquent more than 10 years at the time the offset is made;

(3) With respect to which NARA has:

(i) Given the debtor at least 60 days to present evidence that all or part of the debt is not past due or legally enforceable;

(ii) Considered evidence presented by the debtor; and

(iii) Determined that an amount of the debt is past due and legally enforceable;

(4) With respect to which NARA has notified or has made a reasonable attempt to notify the debtor that:

(i) The debt is past due, and

(ii) Unless repaid within 60 days of the date of the notice, the debt may be referred to the Treasury for offset against any refund of overpayment of tax; and

(5) All other requirements of 31 U.S.C. 3720A and the Treasury regulations relating to the eligibility of a debt for tax return offset (31 CFR 285.2) have been satisfied.

§ 1201.41 What are NARA's procedures for collecting debts by tax refund offset?

(a) NARA's Financial Services Division will be the point of contact with

the Treasury for administrative matters regarding the offset program.

(b) NARA will ensure that the procedures prescribed by the Treasury are followed in developing information about past-due debts and submitting the debts to the Treasury.

(c) NARA will submit to the Treasury a notification of a taxpayer's liability for past-due legally enforceable debt. This notification will contain the following:

(1) The name and taxpayer identification number of the debtor;

(2) The amount of the past-due and legally enforceable debt;

(3) The date on which the original debt became past due;

(4) A statement certifying that, with respect to each debt reported, all of the requirements of §1201.40(b) have been satisfied; and

(5) Any other information as prescribed by Treasury.

(d) For purposes of this section, notice that collection of the debt is stayed by a bankruptcy proceeding involving the debtor will bar referral of the debt to the Treasury.

(e) NARA will promptly notify the Treasury to correct data when NARA:

(1) Determines that an error has been made with respect to a debt that has been referred;

(2) Receives or credits a payment on the debt; or

(3) Receives notice that the person owing the debt has filed for bankruptcy under Title 11 of the United States Code and the automatic stay is in effect or has been adjudicated bankrupt and the debt has been discharged.

(f) When advising debtors of NARA's intent to refer a debt to the Treasury for offset, NARA will also advise debtors of remedial actions (*see* §§1201.9 and 1201.14 through 1201.16 of this part) available to defer the offset or prevent it from taking place.

Subpart E—Administrative Offset

§1201.50 Under what circumstances will NARA collect amounts that I owe to NARA (or some other Federal agency) by offsetting the debt against payments that NARA (or some other Federal agency) owes me?

(a) The regulations in this subpart apply to the collection of any debts you owe to NARA, or to any request from another Federal agency that NARA collect a debt you owe by offsetting your debt against a payment NARA owes you. Administrative offset is authorized under section 5 of the Federal Claims Collection Act of 1966, as amended (31 U.S.C. 3716). NARA will carry out administrative offset in accordance with the provisions of the FCCS. The regulations in this subpart are intended only to supplement the provisions of the Federal Claims Collection Standards.

(b) The Archivist, after attempting to collect a debt you owe to NARA under Section 3(a) of the Federal Claims Collection Act of 1966, as amended (31 U.S.C. 3711(a)), may collect the debt by administrative offset only after giving you:

(1) Written notice of the type and amount of the claim, the intention of the head of the agency to collect the claim by administrative offset, and an explanation of the rights of the debtor;

(2) An opportunity to inspect and copy the records of the agency related to the claim;

(3) An opportunity for a review within the agency of the decision of the agency related to the claim; and

(4) An opportunity to make a written agreement with the head of the agency to repay the amount of the claim.

(c) No collection by administrative offset will be made on any debt that has been outstanding for more than 10 years, unless facts material to NARA or a Federal agency's right to collect the debt were not known, and reasonably could not have been known, by the official or officials responsible for discovering and collecting the debt.

(d) The regulations in this subpart do not apply to:

(1) A case in which administrative offset of the type of debt involved is explicitly prohibited by statute; or

(2) Debts owed to NARA by Federal agencies.

§ 1201.51 How will NARA request that my debt to NARA be collected by offset against some payment that another Federal agency owes me?

The Archivist may request that funds due and payable to you by another Federal agency instead be paid to NARA to satisfy a debt you owe to NARA. NARA will refer debts to the Treasury for centralized administrative offset in accordance with the FCCS and the procedures established by the Treasury. Where centralized offset is not available or appropriate, NARA may request offset directly from the Federal agency that is holding funds for you. In requesting administrative offset, NARA will certify in writing to the Federal agency that is holding funds for you:

(a) That you owe the debt;

(b) The amount and basis of the debt; and

(c) That NARA has complied with the requirements of 31 U.S.C. 3716, its own administrative offset regulations in this subpart, the applicable administrative offset regulations of the agency holding the funds, and the applicable provisions of the FCCS with respect to providing you with due process.

§ 1201.52 What procedures will NARA use to collect amounts I owe to a Federal agency by offsetting a payment that NARA would otherwise make to me?

(a) Any Federal agency may request that NARA administratively offset funds due and payable to you in order to collect a debt you owe to that agency. NARA will initiate the requested offset only upon:

(1) Receipt of written certification from the creditor agency stating:

(i) That you owe the debt;

(ii) The amount and basis of the debt;

(iii) That the agency has prescribed regulations for the exercise of administrative offset; and

(iv) That the agency has complied with its own administrative offset regulations and with the applicable provisions of the FCCS, including providing you with any required hearing or review; and

(2) A determination by the Archivist that offsetting funds payable to you by NARA in order to collect a debt owed by you would be in the best interest of the United States as determined by the facts and circumstances of the particular case, and that such an offset would not otherwise be contrary to law.

(b) *Multiple debts.* In instances where two or more creditor agencies are seeking administrative offsets, or where two or more debts are owed to a single creditor agency, NARA may, in its discretion, allocate the amount it owes to you to the creditor agencies in accordance with the best interest of the United States as determined by the facts and circumstances of the particular case, paying special attention to applicable statutes of limitations.

§ 1201.53 When may NARA make an offset in an expedited manner?

NARA may effect an administrative offset against a payment to be made to you before completion of the procedures required by §§ 1201.51 and 1201.52 if failure to take the offset would substantially jeopardize NARA's ability to collect the debt and the time before the payment is to be made does not reasonably permit the completion of those procedures. An expedited offset will be followed promptly by the completion of those procedures. Amounts recovered by offset, but later found not to be owed to the United States, will be promptly refunded.

§ 1201.54 Can a judgment I have obtained against the United States be used to satisfy a debt that I owe to NARA?

Collection by offset against a judgment obtained by a debtor against the United States will be accomplished in accordance with 31 U.S.C. 3728 and 31 U.S.C. 3716.

Subpart F—Administrative Wage Garnishment

§ 1201.55 How will NARA collect debts through Administrative Wage Garnishment?

NARA will collect debts through Administrative Wage Garnishment in accordance with the Administrative Wage Garnishment regulations issued by the Treasury. NARA adopts, for the

purposes of this subpart, the Treasury's Administrative Wage Garnishment regulations in 31 CFR 285.11.

PART 1202—REGULATIONS IMPLEMENTING THE PRIVACY ACT OF 1974

Subpart A—General Information About the Privacy Act

Sec.
1202.1 What does this part cover?
1202.2 What this part does not cover.
1202.4 Definitions.
1202.6 Whom should I contact for Privacy Act matters at NARA?
1202.8 How does NARA handle records that are in Government-wide Privacy Act systems?
1202.10 Does NARA handle access to and disclosure of records of defunct agencies in the custody of NARA?

Subpart B—Collecting Information

1202.18 How does NARA collect information about individuals?
1202.20 What advisory information does NARA provide before collecting information from me?
1202.22 Will NARA need my Social Security Number?
1202.24 Will NARA ever request information about me from someone else?
1202.26 Who will make sure that my record is accurate?
1202.28 What rules do NARA employees follow in managing personal information?
1202.30 How does NARA safeguard its systems of records?

Subpart C—Individual Access to Records

1202.40 How can I gain access to NARA records about myself?
1202.42 How are requests for access to medical records handled?
1202.44 How long will it take for NARA to process my request?
1202.46 In what ways will NARA provide access?
1202.48 Will I have to pay for copies of records?
1202.50 Does NARA require prepayment of fees?
1202.52 How do I pay?
1202.54 On what grounds can NARA deny my Privacy Act request?
1202.56 How do I appeal a denial of my Privacy Act request?
1202.58 How are appeals processed?

Subpart D—Disclosure of Records

1202.60 When does NARA disclose a record in a Privacy Act system of records?
1202.62 What are the procedures for disclosure of records to a third party?
1202.64 How do I appeal a denial of disclosure?
1202.66 How does NARA keep account of disclosures?

Subpart E—Request To Amend Records

1202.70 Whom should I contact at NARA to amend records about myself?
1202.72 How does NARA handle requests to amend records?
1202.74 How will I know if NARA approved my amendment request?
1202.76 Can NARA deny my request for amendment?
1202.78 How do I accept an alternative amendment?
1202.80 How do I appeal the denial of a request to amend a record?
1202.82 How do I file a Statement of Disagreement?
1202.84 Can I seek judicial review?

Subpart F—Exemptions

1202.90 What NARA systems of records are exempt from release under the National Security Exemption of the Privacy Act?
1202.92 What NARA systems of records are exempt from release under the Law Enforcement Exemption of the Privacy Act?
1202.94 What NARA systems of records are exempt from release under the Investigatory Information Material Exemption of the Privacy Act?

AUTHORITY: 5 U.S.C. 552a; 44 U.S.C. 2104(a).

SOURCE: 66 FR 65652, Dec. 20, 2001, unless otherwise noted.

Subpart A—General Information About the Privacy Act

§ 1202.1 What does this part cover?

(a) This part covers requests under the Privacy Act (5 U.S.C. 552a) for NARA operational records and records of defunct agencies stored in NARA record centers.

(b) This part explains how NARA collects, uses and maintains records about you that are filed by your name or other personal identifiers and which are contained in a ''system of records'' as defined by 5 U.S.C. 552a(a)(5).

(c) This part describes the procedures to gain access to and contest the contents of your records, and the conditions under which NARA discloses such records to others.

§ 1202.2 What this part does not cover.

This part does not cover:

(a) Records that have been transferred into the National Archives of the United States for permanent preservation. Archival records that are contained in systems of records that become part of the National Archives of the United States are exempt from most provisions of the Privacy Act (see 5 U.S.C. 552a(l)(2) and (l)(3)). See subchapter C of this chapter for rules governing access to these type records.

(b) Records of other agencies that are stored in NARA record centers on behalf of that agency are governed by the Privacy Act rules of the transferring agency. Send your request for those records directly to those agencies.

(c) Personnel and medical records held by the National Personnel Records Center (NPRC) on behalf of the Department of Defense and the Office of Personnel Management. Privacy Act requests for these records should come to the NPRC.

§ 1202.4 Definitions.

For the purposes of this part, the term:

(a) *Access* means a transfer of a record, a copy of a record, or the information in a record to the subject individual, or the review of a record by the subject individual.

(b) *Agency* means any executive department, military department, Government corporation, Government-controlled corporation, or other establishment in the executive branch of the Government (including the Executive Office of the President), or any independent regulatory agency.

(c) *Defunct agency* means an agency that has ceased to exist, and has no successor in function.

(d) *Defunct agency* records means the records in a Privacy Act system of a defunct agency that are stored in a NARA records center.

(e) *Disclosure* means a transfer by any means of a record, a copy of a record, or the information contained in a record to a recipient other than the subject individual, or the review of a record by someone other than the subject individual.

(f) *Individual* means a citizen of the United States or an alien lawfully admitted for permanent residence.

(g) *Maintain* includes maintain, collect, use, or disseminate.

(h) *NARA Privacy Act Appeal Official* means the Deputy Archivist of the United States for appeals of denials of access to or amendment of records maintained in a system of records, except where the system manager is the Inspector General; then the term means the Archivist of the United States.

(i) *Record* means any item, collection, or grouping of information about an individual that is maintained by an agency, including, but not limited to, his or her education, financial transactions, medical history and criminal or employment history, and that contains his or her name or an identifying number, symbol, or other identifying particular assigned to the individual, such as a fingerprint, voiceprint, or photograph. For purposes of this part, ''record'' does not mean archival records that have been transferred to the National Archives of the United States.

(j) *Routine use* means, with respect to the disclosure of a record, the use of that record for a purpose which is compatible with the purpose for which it was collected.

(k) *Solicitation* means a request by a NARA employee or contractor that an individual provide information about himself or herself.

(l) *Statistical record* means a record in a system of records maintained for statistical research or reporting purposes only and not used in whole or in part in making any determination about an identifiable individual, except as provided by 13 U.S.C. 8.

(m) *Subject individual* means the individual named or discussed in a record or the individual to whom a record otherwise pertains.

(n) *System manager* means the NARA employee who is responsible for the maintenance of a system of records and

for the collection, use, and dissemination of information in that system of records.

(o) *System of records* means a group of records from which information is retrieved by the name of the individual or by some identifying number, symbol, or other identifier assigned to that individual.

§ 1202.6 Whom should I contact for Privacy Act matters at NARA?

Contact the NARA Privacy Act Officer, National Archives and Records Administration (NGC), Room 3110, 8601 Adelphi Road, College Park, MD 20740–6001, for guidance in making a Privacy Act request, or if you need assistance with an existing request. The Privacy Act Officer will refer you to the responsible system manager. Details about what to include in your Privacy Act request are discussed in Subpart C of this part.

§ 1202.8 How does NARA handle records that are in Government-wide Privacy Act systems?

Records in the custody of NARA in a Government-wide Privacy Act system are the primary responsibility of another agency, e.g., the Office of Personnel Management (OPM) or the Office of Government Ethics (OGE). These records are governed by the regulations established by that agency pursuant to the Privacy Act. NARA provides access using that agency's regulations.

§ 1202.10 Does NARA handle access to and disclosure of records of defunct agencies in the custody of NARA?

Yes, records of defunct agencies in the custody of NARA at a NARA record center are covered by the provisions of this part.

Subpart B—Collecting Information

§ 1202.18 How does NARA collect information about individuals?

Any information that is used in making a determination about your rights, benefits, or privileges under NARA programs is collected directly from you—the subject individual—to the greatest extent possible.

§ 1202.20 What advisory information does NARA provide before collecting information from me?

(a) Before collecting information from you, NARA will advise you of:

(1) The authority for collecting the information and whether providing the information is mandatory or voluntary;

(2) The purpose for which the information will be used;

(3) The routine uses of the information; and

(4) The effect on you, if any, of not providing the information.

(b) NARA ensures that forms used to record the information that you provide are in compliance with the Privacy Act and this part.

§ 1202.22 Will NARA need my Social Security Number?

(a) Before a NARA employee or NARA contractor asks you to provide your social security number (SSN), he or she will ensure that the disclosure is required by Federal law or under a Federal law or regulation adopted before January 1, 1975.

(b) If you are asked to provide your SSN, the NARA employee or contractor must first inform you:

(1) Whether the disclosure is mandatory or voluntary;

(2) The statute or authority under which your SSN is solicited; and

(3) How your SSN will be used.

§ 1202.24 Will NARA ever request information about me from someone else?

NARA will make every effort to gather information from you directly. When NARA solicits information about you from someone else, NARA will explain to that person the purpose for which the information will be used.

§ 1202.26 Who will make sure that my record is accurate?

The system manager ensures that all records used by NARA to make a determination about any individual are maintained with such accuracy, relevancy, timeliness, and completeness as is reasonably possible to ensure fairness to you.

§ 1202.28 What rules do NARA employees follow in managing personal information?

All NARA employees and contractors involved in the design, development, operation or maintenance of any system of records must review the provisions of the Privacy Act and the regulations in this part. NARA employees and contractors must conduct themselves in accordance with the rules of conduct concerning the protection of nonpublic information in the Standards of Ethical Conduct for Employees of the Executive Branch, 5 CFR 2635.703.

§ 1202.30 How does NARA safeguard its systems of records?

(a) The system manager ensures that appropriate administrative, technical, and physical safeguards are established to ensure the security and confidentiality of records. In order to protect against any threats or hazards to their security or loss of integrity, paper records are maintained in areas accessible only to authorized NARA personnel. Electronic records are protected in accordance with the Computer Security Act, OMB Circular A–11 requiring privacy analysis in reporting to OMB, and are accessed via passwords from terminals located in attended offices. After hours, buildings have security guards and/or doors are secured and all entrances are monitored by electronic surveillance equipment.

(b) The system manager, at his/her discretion, may designate additional safeguards similar to or greater than those described in paragraph (a) of this section for unusually sensitive records.

(c) The system manager only permits access to and use of automated or manual personnel records to persons whose official duties require such access, or to you or to a representative designated by you.

Subpart C—Individual Access to Records

§ 1202.40 How can I gain access to NARA records about myself?

(a) If you wish to request access to information about yourself contained in a NARA Privacy Act system of records, you must notify the NARA Privacy Act Officer, National Archives and Records Administration, Rm. 3110, 8601 Adelphi Rd., College Park, MD 20740–6001. If you wish to allow another person to review or obtain a copy of your record, you must provide authorization for that person to obtain access as part of your request.

(b) Your request must be in writing and the letter and the envelope must be marked ''Privacy Act Request.'' Your request letter must contain:

(1) The complete name and identifying number of the NARA system as published in the FEDERAL REGISTER;

(2) A brief description of the nature, time, place, and circumstances of your association with NARA;

(3) Any other information, which you believe, would help NARA to determine whether the information about you is included in the system of records;

(4) If you are authorizing another individual to have access to your records, the name of that person; and

(5) A Privacy Act certification of identity. When you make a request for access to records about yourself, you must verify your identity. You must sign your request and your signature must either be notarized or submitted by you under 28 U.S.C. 1746, a law that permits statements to be made under penalty of perjury as a substitute for notarization. While no specific form is required, you may obtain a Certification of Identity form for this purpose from the NARA Privacy Act Officer. The following information is required:

(i) Your full name;

(ii) An acknowledgment that you understand the criminal penalty in the Privacy Act for requesting or obtaining access to records under false pretenses (5 U.S.C. 552a(i)(3)); and

(iii) A declaration that your statement is true and correct under penalty of perjury (18 U.S.C. 1001).

(c) The procedure for accessing an accounting of disclosure is identical to the procedure for access to a record as set forth in this section.

§ 1202.42 How are requests for access to medical records handled?

When NARA receives a request for access to medical records, if NARA believes that disclosure of medical and/or psychological information directly to

you could have an adverse effect on you, you may be asked to designate in writing a physician or mental health professional to whom you would like the records to be disclosed, and disclosure that otherwise would be made to you will instead be made to the designated physician or mental health professional.

§ 1202.44 How long will it take for NARA to process my request?

(a) NARA will acknowledge your request within 10 workdays of its receipt by NARA and if possible, will make the records available to you at that time. If NARA cannot make the records immediately available, the acknowledgment will indicate when the system manager will make the records available.

(b) If NARA anticipates more than a 10 workday delay in making a record you requested available, NARA also will explain in the acknowledgment specific reasons for the delay.

(c) If your request for access does not contain sufficient information to permit the system manager to locate the records, NARA will request additional information from you. NARA will have 10 workdays following receipt of the additional information in which to make the records available or to acknowledge receipt of the request and to indicate when the records will be available.

§ 1202.46 In what ways will NARA provide access?

(a) At your request, NARA will provide you, or a person authorized by you, a copy of the records by mail or by making the records available in person during normal business hours at the NARA facility where the records are located. If you are seeking access in person, the system manager will permit you to examine the original record, will provide you with a copy of the records, or both.

(b) When obtaining access to the records in person at a NARA facility, you must provide proof of identification either by producing at least one piece of identification bearing a name or signature and either a photograph or physical description (e.g., a driver's license or employee identification card) or by signing the Certification of Identity form described in § 1204.40 (b)(5). NARA reserves the right to ask you to produce additional pieces of identification to assure NARA of your identity. You will also be asked to sign an acknowledgement that you have been given access.

§ 1202.48 Will I have to pay for copies of records?

Yes. However NARA will waive fees for the first 100 pages copied or when the cost to collect the fee will exceed the amount collected. When a fee is charged, the charge per copy is $0.20 per page if NARA makes the copy or $0.15 per page if you make the copy on a NARA self-service copier. Fees for other reproduction processes are computed upon request.

§ 1202.50 Does NARA require prepayment of fees?

If the system manager determines that the estimated total fee is likely to exceed $250, NARA will notify you that the estimated fee must be prepaid before you can have copies of the records. If the final fee is less than the amount you prepaid, NARA will refund the difference.

§ 1202.52 How do I pay?

You must pay by check or money order. Make your check or money order payable to the National Archives and Records Administration and send it to the NARA Privacy Act Officer, Room 3110, 8601 Adelphi Road, College Park, MD 20740–6001.

§ 1202.54 On what grounds can NARA deny my Privacy Act request?

(a) NARA can deny your Privacy Act request for records if the records are maintained in an exempt systems of records are described in subpart F of this part.

(b) A system manager may deny your request for access to your records only if:

(1) NARA has published rules in the FEDERAL REGISTER exempting the pertinent system of records from the access requirement; and

(2) The record is exempt from disclosure under the Freedom of Information Act (FOIA).

(c) Upon receipt of a request for access to a record which is contained within an exempt system of records, NARA will:

(1) Review the record to determine whether all or part of the record must be released to you in accordance with § 1202.40, notwithstanding the inclusion of the record within an exempt system of records; and

(2) Provide access to the record (or part of the record, if it is not fully releasable) in accordance with § 1202.46 or notify you that the request has been denied in whole or in part.

(d) If your request is denied in whole or in part, NARA's notice will include a statement specifying the applicable Privacy Act and FOIA exemptions and advising you of the right to appeal the decision as explained in § 1202.56.

§ 1202.56 How do I appeal a denial of my Privacy Act request?

(a) If you are denied access in whole or in part to records pertaining to yourself, you may file with NARA an appeal of that denial. Your appeal letter must be post marked no later than 35 calendar days after the date of the denial letter from NARA.

(1) Address appeals involving denial of access to Office of Inspector General records to NARA Privacy Act Appeal Official (N), National Archives and Records Administration, Room 4200, 8601 Adelphi Road, College Park, MD 20740–6001.

(2) Address all other appeals to the NARA Privacy Act Appeal Official (ND), National Archives and Records Administration, Room 4200, 8601 Adelphi Road, College Park, MD 20740–6001.

(b) All appeals of denial of access to the NARA Privacy Act Appeal Official must be in writing. Mark both the envelope and the appeal ''Privacy Act '' Access Appeal.''

§ 1202.58 How are appeals processed?

(a) Upon receipt of your appeal, the NARA Privacy Act Appeal Official will consult with the system manager, legal counsel, and such other officials as may be appropriate. If the NARA Privacy Act Appeal Official determines that the records you requested are not exempt from release, NARA grants you access and so notifies you.

(b) If the NARA Privacy Act Appeal Official determines that your appeal must be rejected, NARA will immediately notify you in writing of that determination. This decision is final and cannot be appealed further within NARA. NARA's notification to you will include:

(1) The reason for the rejection of the appeal; and

(2) Notice of your right to seek judicial review of NARA's final determination, as described in 36 CFR 1202.84.

(c) NARA will make its final determination no later than 30 workdays from the date on which NARA receives your appeal. NARA may extend this time limit by notifying you in writing before the expiration of the 30 workdays. This notification will include an explanation of the reasons for the time extension.

Subpart D—Disclosure of Records

§ 1202.60 When does NARA disclose a record in a Privacy Act system of records?

NARA will not disclose any records in a Privacy Act system of records to any person or to another agency without the express written consent of the subject individual unless the disclosure is:

(a) To NARA employees who have a need for the information in the official performance of their duties;

(b) Required by the provisions of the Freedom of Information Act, as amended;

(c) For a routine use that has been published in a notice in the FEDERAL REGISTER;

(d) To the Bureau of Census for purposes of planning or carrying out a census or survey or related activity pursuant to title 13 U.S.C.;

(e) To a person who has provided NARA with advance adequate written assurance as specified in § 1202.62(a) that the record will be used solely as a statistical research or reporting record. (Personal identifying information is deleted from the record released for statistical purposes. The system manager ensures that the identity of

the individual cannot reasonably be deduced by combining various statistical records.)

(f) To the National Archives of the United States as a record which has sufficient historical or other value to warrant its continued preservation by the United States Government or for evaluation by the Archivist or the designee of the Archivist to determine whether the record has such value;

(g) To another agency or any governmental jurisdiction within or under the control of the United States for a civil or criminal law enforcement activity if the activity is authorized by law, and if the head of the agency or his or her other designated representative has made a written request to NARA specifying the particular portion desired and the law enforcement activity for which the record is sought;

(h) To a person showing compelling circumstances affecting the health or safety of an individual, and not necessarily the individual to whom the record pertains. A disclosure of this nature is followed by a notification to the last known address of the subject individual;

(i) To either House of Congress or to a committee or subcommittee (joint or of either House), in the course of the performance of official legislative activities;

(j) To the Comptroller General or any of his authorized representatives in the course of the performance of the duties of the General Accounting Office;

(k) Pursuant to the order of a court of competent jurisdiction; or

(l) To a consumer reporting agency in accordance with 31 U.S.C. 3711(e).

§ 1202.62 What are the procedures for disclosure of records to a third party?

(a) To obtain access to records about a person other than yourself, address the request to the NARA Privacy Act Officer, National Archives and Records Administration, Room 3110, 8601 Adelphi Rd., College Park, MD 20740–6001. If you are requesting access for statistical research as described in § 1202.60(e), you must submit a written statement that includes as a minimum:

(1) A statement of the purpose for requesting the records; and

(2) Certification that the records will be used only for statistical purposes.

(b) NARA will acknowledge your request within 10 workdays and will make a decision within 30 workdays, unless NARA notifies you that the time limit must be extended for good cause.

(c) Upon receipt of your request, NARA will verify your right to obtain access to documents pursuant to § 1202.60. Upon verification, the system manager will make the requested records available to you.

(d) If NARA determines that the disclosure is not permitted under § 1202.60, the system manager will deny your request in writing. NARA will inform you of the right to submit a request for review of the denial and a final determination to the appropriate NARA Privacy Act Appeal Officer.

§ 1202.64 How do I appeal a denial of disclosure?

(a) Your request for a review of the denial of disclosure to records maintained by the Office of the Inspector General must be addressed to the NARA Privacy Act Appeal Officer (N), National Archives and Records Administration, Room 4200, 8601 Adelphi Rd., College Park, MD 20740–6001.

(b) Requests for a review of a denial of disclosure to all other NARA records must be addressed to the NARA Privacy Act Appeal Officer (ND), National Archives and Records Administration, Room 4200, 8601 Adelphi Rd., College Park, MD 20740–6001.

§ 1202.66 How does NARA keep account of disclosures?

(a) Except for disclosures made to NARA employees in the course of the performance of their duties or when required by the Freedom of Information Act (see § 1202.60(a) and (b)), NARA keeps an accurate accounting of each disclosure and retains it for 5 years after the disclosure or for the life of the record, whichever is longer. The accounting includes the:

(1) Date of disclosure;

(2) Nature, and purpose of each disclosure; and

(3) Name and address of the person or agency to which the disclosure is made.

(b) The system manager also maintains with the accounting of disclosures:

(1) A full statement of the justification for the disclosures;

(2) All documentation surrounding disclosure of a record for statistical or law enforcement purposes; and

(3) Evidence of written consent by the subject individual to a disclosure, if applicable.

(c) Except for the accounting of disclosures made for a law enforcement activity (see § 1202.60(g)) or of disclosures made from exempt systems (see subpart F of this part), the accounting of disclosures will be made available to the subject individual upon request. Procedures for requesting access to the accounting of disclosures are in subpart C.

Subpart E—Request To Amend Records

§ 1202.70 Whom should I contact at NARA to amend records about myself?

If you believe that a record that NARA maintains about you is not accurate, timely, relevant or complete, you may request that the record be amended. Write to the NARA Privacy Act Officer, Room 3110, 8601 Adelphi Rd, College Park, MD 20470–6001. Employees of NARA who desire to amend their personnel records should write to the Director, Human Resources Services Division. You should include as much information, documentation, or other evidence as needed to support your request to amend the pertinent record. Mark both the envelop and the letter with the phrase ''Privacy Act—Request To Amend Record.''

§ 1202.72 How does NARA handle requests to amend records?

(a) NARA will acknowledge receipt of a request to amend a record within 10 workdays. If possible, the acknowledgment will include the system manager's determination either to amend the record or to deny your request to amend as provided in § 1202.76.

(b) When reviewing a record in response to your request to amend, the system manager will assess the accuracy, relevance, timeliness, and completeness of the existing record in light of your proposed amendment to determine if your request to amend is justified. If you request the deletion of information, the system manager also will review your request and the existing record to determine whether the information is relevant and necessary to accomplish NARA's purpose, as required by law or Executive order.

§ 1202.74 How will I know if NARA approved my amendment request?

If NARA approves your amendment request, the system manager will promptly make the necessary amendment to the record and will send a copy of the amended record to you. NARA will also advise all previous recipients of the record, using the accounting of disclosures, that an amendment has been made and give the substance of the amendment. Where practicable, NARA will also send a copy of the amended record to previous recipients.

§ 1202.76 Can NARA deny my request for amendment?

If the system manager denies your request to amend or determines that the record should be amended in a manner other than that requested by you, NARA will advise you in writing of the decision. The denial letter will state:

(a) The reasons for the denial of your amendment request;

(b) Proposed alternative amendments, if appropriate;

(c) Your right to appeal the denial; and

(d) The procedures for appealing the denial.

§ 1202.78 How do I accept an alternative amendment?

If your request to amend a record is denied and NARA suggested alternative amendments, and you agree to those alternative amendments, you must notify the Privacy Act Officer who will then make the necessary amendments in accordance with § 1202.74.

§ 1202.80 How do I appeal the denial of a request to amend a record?

(a) If you disagree with a denial of your request to amend a record, you can file an appeal of that denial.

(1) Address your appeal of the denial to amend records signed by a system manager other than the Inspector General, to the NARA Privacy Act Appeal Official (ND), Room 3110, 8601 Adelphi Road, College Park, MD, 20740–6001.

(2) Address the appeal of the denial to amend records signed by the Inspector General to the NARA Privacy Act Appeal Official (N), Room 3110, 8601 Adelphi Road, College Park, MD, 20740–6001.

(3) For current NARA employees if the denial to amend concerns a record maintained in the employee's Official Personnel Folder or in another Government-wide system maintained by NARA on behalf of another agency, NARA will provide the employee with name and address of the appropriate appeal official in that agency.

(b) Appeals to NARA must be in writing and must be postmarked no later than 35 calendar days from the date of the NARA denial of a request to amend. Your appeal letter and envelope must be marked ''Privacy Act—Appeal''.

(c) Upon receipt of an appeal, the NARA Privacy Act Appeal Official will consult with the system manager, legal counsel, and such other officials as may be appropriate. If the appeal official determines that the record should be amended, he or she will instruct the system manager to amend the record in accordance with § 1202.74 and will notify you of that action.

(d) If, after consulting with officials specified in paragraph (c) of this section, the NARA Privacy Act Appeal Official determines that your appeal should be rejected, the NARA Privacy Act Appeal Official will notify you in writing of that determination. This notice serves as NARA's final determination on your request to amend a record. The letter to you will include:

(1) The reason for the rejection of your appeal;

(2) Proposed alternative amendments, if appropriate, which you may accept (see 36 CFR 1202.78 for the procedure);

(3) Notice of your right to file a Statement of Disagreement for distribution in accordance with § 1202.82; and

(4) Notice of your right to seek judicial review of the NARA final determination, as provided in § 1202.84.

(e) The NARA final determination will be made no later than 30 workdays from the date on which the appeal is received by the NARA Privacy Act Appeal Official. In extraordinary circumstances, the NARA Privacy Act Appeal Official may extend this time limit by notifying you in writing before the expiration of the 30 workdays. The notification will include a justification for the extension of time.

§ 1202.82 How do I file a Statement of Disagreement?

If you receive a NARA final determination denying your request to amend a record, you may file a Statement of Disagreement with the appropriate system manager. The Statement of Disagreement must include an explanation of why you believe the record to be inaccurate, irrelevant, untimely, or incomplete. The system manager will maintain your Statement of Disagreement in conjunction with the pertinent record. The System Manager will send a copy of the Statement of Disagreement to any person or agency to whom the record has been disclosed, only if the disclosure was subject to the accounting requirements of § 1202.60.

§ 1202.84 Can I seek judicial review?

Yes, within 2 years of receipt of a NARA final determination as provided in § 1202.54 or § 1202.80, you may seek judicial review of that determination. You may file a civil action in the Federal District Court:

(a) In which you reside or have a principal place of business;

(b) In which the NARA records are located; or

(c) In the District of Columbia.

Subpart F—Exemptions

§ 1202.90 What NARA systems of records are exempt from release under the National Security Exemption of the Privacy Act?

(a) The Investigative Case Files of the Inspector General (NARA–23) and the Personnel Security Case Files (NARA–24) systems of records are eligible for exemption under 5 U.S.C. 552a(k)(1) because the records in these systems:

(1) Contain information specifically authorized under criteria established by an Executive Order to be kept secret in the interest of national defense or foreign policy and

(2) Are in fact properly classified pursuant to such Executive Order.

(b) The systems described in paragraph (a) are exempt from 5 U.S.C. 552a (c)(3), (d), (e)(1), and (e)(4)(G) and (H). Exemptions from the particular subsections are justified for the following reasons:

(1) From subsection (c)(3) because accounting for each disclosure could result in the release of properly classified information which would compromise the national defense or disrupt foreign policy.

(2) From the access and amendment provisions of subsection (d) because access to the records in these systems of records could result in the release of properly classified information which would compromise the national defense or disrupt foreign policy. Amendment of either of these series of records would interfere with ongoing investigations and law enforcement or national security activities and impose an impossible administrative burden by requiring investigations to be continuously reinvestigated.

(3) From subsection (e)(1) because verification of the accuracy of all information to the records could result in the release of properly classified information which would compromise the national defense or disrupt foreign policy.

(4) From subsection (e)(4)(G) and (H) because these systems are exempt from the access and amendment provisions of subsection (d), pursuant to subsection (k)(1) of the Privacy Act.

§ 1202.92 What NARA systems of records are exempt from release under the Law Enforcement Exemption of the Privacy Act?

(a) The Investigative Files of the Inspector General (NARA–23) system of records is eligible for exemption under 5 U.S.C. 552a(k)(2) because this record system contains investigatory material of actual, potential or alleged criminal, civil or administrative violations, compiled for law enforcement purposes other than within the scope of subsection (j)(2) of 5 USC 552a. If you are denied any right, privilege or benefit that you would otherwise be entitled by Federal law, or for which you would otherwise be eligible, as a result of the record, NARA will make the record available to you, except for any information in the record that would disclose the identity of a confidential source as described in 5 U.S.C. 552a(k)(2).

(b) The system described in paragraph (a) of this section is exempt from 5 U.S.C. 552a (c)(3), (d), (e)(1) and (e)(4) (G) and (H), and (f). Exemptions from the particular subsections are justified for the following reasons:

(1) From subsection (c)(3) because release of disclosure accounting could alert the subject of an investigation about the alleged violations, to the existence of the investigation and to the fact that they are being investigated by the Office of Inspector General (OIG) or another agency. Release of such information could provide significant information concerning the nature of the investigation, resulting in the tampering or destruction of evidence, influencing of witnesses, danger to individuals involved, and other activities that could impede or compromise the investigation.

(2) From the access and amendment provisions of subsection (d) because access to the records contained in this system of records could inform the subject of an investigation of an actual or potential criminal, civil, or administrative violation, of the existence of that investigation; of the nature and scope of the information and evidence obtained as to his/her activities; of the identity of confidential sources, witnesses, and law enforcement personnel; and of information that may enable the

subject to avoid detection or apprehension. These factors would present a serious impediment to effective law enforcement where they prevent the successful completion of the investigation, endanger the physical safety of confidential sources, witnesses, and law enforcement personnel, and/or lead to the improper influencing of witnesses, the destruction of evidence, or the fabrication of testimony. In addition, granting access to such information could disclose security-sensitive or confidential business information or information that would constitute an unwarranted invasion of the personal privacy of third parties. The amendment of these records could allow the subject to avoid detection or apprehension and interfere with ongoing investigations and law enforcement activities.

(3) From subsection (e)(1) because the application of this provision could impair investigations and interfere with the law enforcement responsibilities of the OIG or another agency for the following reasons:

(i) It is not possible to detect relevance or need for specific information in the early stages of an investigation, case or matter. After the information is evaluated, relevance and necessity may be established.

(ii) During an investigation, the OIG may obtain information about other actual or potential criminal, civil or administrative violations, including those outside the scope of its jurisdiction. The OIG should retain this information, as it may aid in establishing patterns of inappropriate activity, and can provide valuable leads for Federal and other law enforcement agencies.

(iii) In interviewing individuals or obtaining other forms of evidence during an investigation, information may be supplied to an investigator, which relates to matters incidental to the primary purpose of the investigation but which may relate also to matters under the investigative jurisdiction of another agency. Such information cannot readily be segregated.

(iv) From subsection (e)(4)(G) and (H) because this system is exempt from the access and amendment provisions of subsection (d), pursuant to subsection (k)(2) of the Privacy Act.

(v) From subsection (f) because this system is exempt from the access and amendment provisions of subsection (d), pursuant to subsection (k)(2) of the Privacy Act.

§ 1202.94 What NARA systems of records are exempt from release under the Investigatory Information Material exemption of the Privacy Act?

(a) The Personnel Security Case Files (NARA–24) system of records is eligible for exemption under 5 U.S.C. 552a(k)(5) because it contains investigatory material compiled solely for the purpose of determining suitability, eligibility, or qualifications for federal employment or access to classified information. The only information exempt under this provision is that which would disclose the identity of a confidential source described in 5 U.S.C. 552a(k)(2).

(b) The system of records described in paragraph (a) of this section is exempt from 5 U.S.C. 552a(d)(1). Exemption from the particular subsection is justified as access to records in the system would reveal the identity(ies) of the source(s) of information collected in the course of a background investigation.

PART 1206—NATIONAL HISTORICAL PUBLICATIONS AND RECORDS COMMISSION

Sec.

Subpart A—General

1206.1 What does this part cover?
1206.3 What definitions apply to the regulations in Part 1206?
1206.4 What is the purpose of the Commission?
1206.5 Who serves on the Commission?
1206.6 How do you organize the grant program?
1206.8 How do you operate the grant program?
1206.10 How do you make grant opportunities known?
1206.11 How may an applicant apply for an NHPRC grant?
1206.12 What are my responsibilities once I have received a grant?

Subpart B—Publications Grants

1206.20 What are the scope and purpose of publications grants?
1206.22 What type of proposal is eligible for a publications grant?
1206.24 What type of proposal is ineligible for a publications grant?

Subpart C—Records Grants

1206.30 What is the scope and purpose of records grants?
1206.32 What type of proposal is eligible for a records grant?
1206.34 What type of proposal is ineligible for a records grant?

Subpart D—State Records Program

1206.40 What is a State records program?
1206.41 What is a state historical records advisory board and how is it constituted?
1206.42 What is a State Coordinator?
1206.43 What are the duties of the deputy State coordinator?
1206.44 Who is eligible for sub-grants?
1206.45 What rules govern sub-grant distribution, cost sharing, grant administration, and reporting?

Subpart E—Applying for NHPRC Grants

1206.50 What types of funding and cost sharing arrangements does the Commission make?
1206.52 Does the Commission ever place conditions on its grants?
1206.54 Who may apply for NHPRC grants?
1206.56 When are applications due?
1206.58 How do I apply for a grant?
1206.60 What must I provide as a formal grant application?
1206.62 Who reviews and evaluates grant proposals?
1206.64 What formal notification will I receive, and will it contain other information?

Subpart F—Grant Administration

1206.70 Who is responsible for administration of NHPRC grants?
1206.72 Where can I find the regulatory requirements that apply to NHPRC grants?
1206.74 Do I need prior written approval for changes to the grant project?
1206.76 May I receive an extension to my grant project?
1206.80 What reports am I required to make?
1206.82 What is the format and content of the financial report?
1206.84 What is the format and content of the narrative report?
1206.86 What additional materials must I submit with the final narrative report?
1206.88 Does the NHPRC have any liability under a grant?
1206.90 Must I acknowledge NHPRC grant support?

AUTHORITY: 5 U.S.C. 301; 44 U.S.C. 2104(a); 44 U.S.C. 2501–2506; 2 CFR 200, and as noted in specific sections.

SOURCE: 71 FR 27624, May 12, 2006, unless otherwise noted.

Subpart A—General

§ 1206.1 What does this part cover?

This part prescribes the procedures and rules governing the operation of the grant program of the National Historical Publications and Records Commission.

[71 FR 27624, May 12, 2006. Redesignated at 75 FR 66317, Oct. 28, 2010]

§ 1206.3 What definitions apply to the regulations in Part 1206?

As used in Part 1206:

Board refers to a State historical records advisory board.

Commission (see NHPRC).

Coordinator means the coordinator of a State historical records advisory board.

Cost sharing means the financial contribution the applicant pledges toward the total cost of a project. Cost sharing can include both direct and indirect expenses, contributions provided by the applicant or by third parties as in-kind or cash contributions, and any income earned directly by the project. For a more detailed definition, see 2 CFR 306.

Direct costs means expenses that are attributable directly to the cost of a project, such as salaries, project supplies, travel expenses, equipment rented or purchased for the project, or services procured for the project.

Grant opportunity announcement refers to a document published on the NHPRC Web site and at *http://www.grants.gov* that describes a type of grant offered, eligibility requirements, and application instructions.

Guidance refers to a non-binding document published on the NHPRC Web site to clarify or explain Commission policy or to provide procedural details.

Historical records means documentary material having permanent or enduring value, including manuscripts, personal papers, official records, maps, audio-visual materials, and electronic files.

Historical records repository means organizations whose mission is to acquire, preserve, and promote the use of historical records. They include archives, special collections, museums, and historical societies.

Indirect costs means costs incurred for common or joint objectives of an applicant's organization and therefore not attributable to a specific project or activity. Typically, indirect costs include items such as overhead for facilities maintenance and accounting services. For a more detailed definition, see 2 CFR 306.

NHPRC means members of the National Historical Publications and Records Commission acting as a body.

NHPRC staff refers to the Executive Director and the staff of the Commission or the Executive Director of the Commission.

State, in §§ 1206.40 through 1206.42, means all 50 States of the Union, plus the District of Columbia, Puerto Rico, the U.S. Virgin Islands, Guam, American Samoa, and the Commonwealth of the Northern Mariana Islands. For a more detailed definition, see 2 CFR 306.

The Manual of Suggested Practices refers to ''The Manual of Suggested Practices for State Historical Records Advisory Boards.'' It is a type of guidance.

[75 FR 66317, Oct. 28, 2010, as amended at 79 FR 76080, Dec. 19, 2014]

§ 1206.4 What is the purpose of the Commission?

The National Historical Publications and Records Commission (NHPRC or Commission), a statutory body affiliated with the National Archives and Records Administration (NARA), supports a wide range of activities to preserve, publish, and encourage the use of primary documentary sources. Through the NHPRC's grant programs, training programs, and special projects, the Commission offers advice and assistance to State and local government agencies, non-Federal nonprofit organizations and institutions, and Federally-acknowledged or state-recognized Native American tribes or groups committed to the preservation, publication, or use of United States documentary resources.

[75 FR 66317, Oct. 28, 2010]

§ 1206.5 Who serves on the Commission?

Established by Congress in 1934, the Commission is a 15-member body, chaired by the Archivist of the United States and comprised of representatives of the three branches of the Federal Government and of professional associations of archivists, historians, documentary editors, and records administrators.

§ 1206.6 How do you organize the grant program?

We offer grants to support publications projects (subpart B), and records projects (subpart C). State grants (subpart D) are made to designated state agencies for statewide archival services and may include subgrants to individuals and institutions. We also support a variety of professional development opportunities.

§ 1206.8 How do you operate the grant program?

(a) The Executive Director manages the program under Commission guidance and the immediate administrative direction of its Chairman, the Archivist of the United States.

(b) The Commission establishes grant program priorities as reflected in its grant opportunity announcements and, from time-to-time, issues non-binding, clarifying guidance documents through the NHPRC Web site.

(c) To assure fair treatment of every application, all members of the Commission and its staff follow conflict-of-interest rules, available on the NHPRC Web site at *http://www.archives.gov/nhprc*.

(d) The purpose and work plan of all NHPRC-funded grant projects must be in accord with current Commission program guidance as reflected in the grant opportunity announcements.

(e) The Commission makes funding recommendations to the Archivist of the United States, who has the authority to award grants.

[71 FR 27624, May 12, 2006, as amended at 75 FR 66317, Oct. 28, 2010; 79 FR 76080, Dec. 19, 2014]

§ 1206.10 How do you make grant opportunities known?

(a) The Commission annually determines which grant opportunities it will offer, and establishes eligibility, application deadlines, and programmatic requirements.

(b) The NHPRC staff prepares grant opportunity announcements consisting of all information necessary to apply for each grant and publishes the announcements on the NHPRC Web site (*http://www.archives.gov/nhprc*) at least three months before the final application due date.

(c) The NHPRC staff publishes notice of each announcement on *http://www.grants.gov*, a Federal government Web site widely available to the public, at least three months before the final application due date.

[71 FR 27624, May 12, 2006, as amended at 75 FR 66317, Oct. 28, 2010]

§ 1206.11 How may an applicant apply for an NHPRC grant?

Applicants may apply for a grant using Grants.gov or by using other electronic or paper forms and documents, according to the instructions in each announcement.

§ 1206.12 What are my responsibilities once I have received a grant?

(a) Comply with all Federal regulations about grants administration that are contained in § 1206.72 and 2 CFR part 200.

(b) Comply with NHPRC grant announcements and other Commission guidance.

(c) Meet performance requirements defined in your grant application.

(d) Report on performance requirements defined in your grant application and other performance measures specified in the grant award.

(e) Comply with conditions set by the Commission according to § 1206.52.

[71 FR 27624, May 12, 2006, as amended at 75 FR 66317, Oct. 28, 2010; 79 FR 76080, Dec. 19, 2014]

Subpart B—Publications Grants

§ 1206.20 What are the scope and purpose of publications grants?

Publications grants support projects intended to make widely available those documentary source materials important to the study and understanding of United States history. In order to receive a publications grant, a project must intend to publish historical records of national value and interest.

§ 1206.22 What type of proposal is eligible for a publications grant?

(a) The Commission provides grants for publishing papers of United States leaders and historical records relating to outstanding events, topics, themes, or movements of national significance in United States history. These projects include the production of:

(1) Documentary editions that involve collecting, compiling, transcribing, editing, annotating, and publishing, either selectively or comprehensively, historical papers and records;

(2) Microfilm editions consisting of organized collections of images of original sources, usually without transcription and annotations;

(3) Electronic editions consisting of organized collections of images of original editions. Electronic editions may include transcriptions and/or annotations and other data to facilitate document discovery;

(4) Electronic editions of transcribed and annotated documents, including electronic republications of hard copy editions; and

(5) Any combination of editions specified in paragraphs (a)(1) through (a)(4) of this section.

(b) The Commission may also support projects to develop methods, tools, techniques, and practices to improve and advance the documentary editing profession in the United States, and to support projects that apply information technology to publishing projects.

(c) The Commission may also support subvention grants to nonprofit presses to help defray publication costs of NHPRC-supported or endorsed editions.

(d) The Commission may also support fellowships, institutes, and other professional development opportunities related to this program.

(e) Detailed programmatic requirements established by the Commission are found in the grant opportunity announcements.

§ 1206.24 What type of proposal is ineligible for a publications grant?

(a) The Commission does not support:

(1) Historical research apart from what is necessary for editing documentary publications; or

(2) Documentary editing projects to publish the papers of someone who has been deceased for fewer than ten years.

(b) Other programmatic limitations established by the Commission are found in the grant opportunity announcements and the NHPRC Web site.

[71 FR 27624, May 12, 2006, as amended at 75 FR 66317, Oct. 28, 2010; 79 FR 76080, Dec. 19, 2014]

Subpart C—Records Grants

§ 1206.30 What is the scope and purpose of records grants?

(a) Records grants support projects designed to preserve and facilitate use of historical records of national, state, or local significance for the purpose of furthering an understanding and appreciation of United States history and assuring the rights of American citizens to free and equal access to government records.

(b) The Commission also supports projects to develop methods, tools, techniques, and practices to improve and advance the archival profession in the United States, and to support continuing education of archivists, records managers, and other keepers of historical records.

§ 1206.32 What type of proposal is eligible for a records grant?

(a) The Commission provides grants to historical records repositories for locating, preserving and encouraging use of records held by State, local, and other governmental units and private archives and collections of papers maintained in non-Federal, nonprofit repositories and special collections relating to the study of American history.

(b) The Commission provides support to historical records repositories and other institutions for:

(1) Advancing the state of the art in archival and records management and in the long-term maintenance of, and easy access to, authentic electronic records;

(2) Promoting cooperative efforts among institutions and organizations in archival and records management;

(3) Improving the knowledge, performance, and professional skills of those who work with historical records; and

(4) Continuing archival education, including fellowships, institutes, and symposia.

[71 FR 27624, May 12, 2006, as amended at 75 FR 66317, Oct. 28, 2010]

§ 1206.34 What type of proposal is ineligible for a records grant?

In addition to other programmatic limitations established by the Commission as found in the grant opportunity announcements, NHPRC does not support proposals:

(a) For building projects;

(b) To purchase manuscripts or historical records;

(c) For projects involving substantial work with artifacts, library materials, or works of art; or

(d) For exhibits or celebrations, reenactments, and other observations of historical events.

[71 FR 27624, May 12, 2006, as amended at 75 FR 66318, Oct. 28, 2010]

Subpart D—State Records Program

§ 1206.40 What is a State records program?

(a) Each State is eligible to receive NHPRC grants to support the work of the State historical records advisory board (board); to operate statewide historical records services; and to make sub-grants to eligible organizations within the State in support of historical records activities.

(b) Boards review and comment on applications for NHPRC records projects grants submitted from their

states, according to The Manual of Suggested Practices.

[71 FR 27624, May 12, 2006, as amended at 75 FR 66318, Oct. 28, 2010]

§ 1206.41 What is a state historical records advisory board and how is it constituted?

(a) *Responsibilities*. The board is the central advisory body for historical records coordination within the State and for NHPRC State and local records projects within the State. The board engages in planning; it develops, revises, and submits to the Commission a State plan including priorities for State historical records projects following ''The Manual of Suggested Practices.'' The board reviews all State and local records projects within the State and makes recommendations for State projects to the Commission.

(b) *Appointments*. Each State participating in the NHPRC State program must adopt an appointment process and appoint a board following ''The Manual of Suggested Practices.'' The appointment process and membership must be reported at least annually to the Commission. A majority of members should have recognizable experience in the administration of records, manuscripts, or archives. The board should be as broadly representative as possible of the public and private archives, records offices, and research institutions and organizations in the State.

[71 FR 27624, May 12, 2006, as amended at 75 FR 66318, Oct. 28, 2010]

§ 1206.42 What is a State Coordinator?

(a) *Duties*. The State coordinator (coordinator) is the officer responsible for the NHPRC State program. He or she reports the State board appointment process, membership and recommendations to the NHPRC at least on an annual basis and may serve as chair of the board and may perform other duties following applicable State statute or regulation and ''The Manual of Suggested Practices.''

(b) *Appointment*. The coordinator should be the full-time professional official in charge of the State archival program or agency, unless otherwise specified in State statute or regulation. The coordinator serves *ex officio*, unless otherwise specified in State statute or regulation. The coordinator is not deemed to be an official or employee of the Federal Government and receives no Federal compensation for such service.

(c) *Replacement*. In the absence of a deputy coordinator, the State board may select an acting coordinator until another coordinator is appointed, in order to conduct the necessary business of the board.

[71 FR 27624, May 12, 2006, as amended at 75 FR 66318, Oct. 28, 2010]

§ 1206.43 What are the duties of the deputy State coordinator?

The coordinator may designate a deputy State coordinator to assist in carrying out the duties and responsibilities of the coordinator and to serve as an acting coordinator at the coordinator's direction or upon the coordinator's resignation or inability to serve.

[71 FR 27624, May 12, 2006, as amended at 75 FR 66318, Oct. 28, 2010]

§ 1206.44 Who is eligible for subgrants?

All organizations located within a State that has an active State historical records board and entities defined in § 1206.54 may be eligible, as determined by the board.

[75 FR 66318, Oct. 28, 2010]

§ 1206.45 What rules govern sub-grant distribution, cost sharing, grant administration, and reporting?

(a) The Commission will annually establish guidance published in the grant opportunity announcement for State grants regarding:

(1) The distribution of re-grant funds;

(2) Cost sharing and matching requirements; and

(3) Reporting.

(b) Each participating State is responsible for ensuring that the subgrantees comply with Federal grant administration and reporting requirements, including those in 2 CFR parts 230 and 2600.

(c) Each participating State must annually prepare a report to the NHPRC

on its sub-grant program, following the requirements outlined in § 1206.80.

[71 FR 27624, May 12, 2006, as amended at 75 FR 66318, Oct. 28, 2010; 79 FR 76080, Dec. 19, 2014]

Subpart E—Applying for NHPRC Grants

§ 1206.50 What types of funding and cost sharing arrangements does the Commission make?

(a) *Types of grants.* (1) *Matching grant.* A matching grant is a Federal grant awarded only after the applicant raises its share of non-Federal support for a project. We will match only funds raised from non-Federal sources, either monies provided by the applicant's own institution specifically for the project or from a non-Federal third-party source. The Commission does not ordinarily make matching grants.

(2) *Outright grant.* Outright grants are those awards we make without any matching requirement. However, outright grants usually include a cost-sharing requirement.

(b) *Cost sharing.* (1) Cost sharing consists of the applicant's contribution to the cost of the project. The Commission ordinarily expects the applicant to provide cost sharing in an amount equal to the amount of the Federal grant award. Exceptions to the one-to-one cost sharing requirement may be set by the Commission in specific grant opportunity announcements.

(2) Cost sharing may include cash or in-kind contributions provided by the applicant or by a non-Federal third party.

(3) As indicated in 2 CFR part 2600, we do not pay indirect costs from grant funds, but allow indirect costs to be used for cost sharing.

[71 FR 27624, May 12, 2006, as amended at 75 FR 66318, Oct. 28, 2010; 79 FR 76080, Dec. 19, 2014]

§ 1206.52 Does the Commission ever place conditions on its grants?

Yes, the Commission may place certain conditions on its grants. The Commission describes applicable conditions in each grant opportunity announcement.

[71 FR 27624, May 12, 2006, as amended at 75 FR 66318, Oct. 28, 2010]

§ 1206.54 Who may apply for NHPRC grants?

The Commission will consider applications from State government agencies in States where there is an active board; local government agencies; United States nonprofit organizations and institutions, including institutions of higher education; or Federally-acknowledged and State-recognized American Indian tribes or groups.

[75 FR 66318, Oct. 28, 2010]

§ 1206.56 When are applications due?

The Commission generally meets twice a year, and considers grant proposals submitted by the deadlines set by the Commission. The deadlines are published in each grant opportunity announcement and at *http://www.grants.gov*. All proposals must be submitted by the published deadline.

[75 FR 66318, Oct. 28, 2010]

§ 1206.58 How do I apply for a grant?

(a) *Contact the NHPRC staff.* The Commission encourages you to discuss your proposal through correspondence, by phone, or in person with NHPRC staff.

(b) *Contact your State Historical Records Advisory Board as appropriate.* NHPRC encourages you to discuss your proposal with your State historical records coordinator at all stages of your proposal's development and before you submit the proposal.

(1) Contact is not necessary if:

(i) Your proposal is for publications or subvention projects; or

(ii) You are an American Indian tribe.

(2) You will find the staff contacts and a list of State historical records coordinators on the Commission's Web site at *http://www.archives.gov/nhprc*.

[71 FR 27624, May 12, 2006, as amended at 75 FR 66318, Oct. 28, 2010]

§ 1206.60 What must I provide as a formal grant application?

The forms and other documents you must submit are listed with each grant

opportunity announcement on the NHPRC web site. OMB Control Number 3095–0013 has been assigned to this information collection.

[71 FR 27624, May 12, 2006, as amended at 75 FR 66319, Oct. 28, 2010]

§ 1206.62 Who reviews and evaluates grant proposals?

(a) *State boards*. State historical records advisory boards may evaluate your proposal according to Commission grant opportunity announcements.

(b) *Peer reviewers*. The NHPRC staff may ask external peer reviewers to evaluate the proposal according to Commission grant announcements.

(c) *Other reviewers*. The Commission staff may require additional reviews.

(d) *NHPRC staff*. NHPRC staff analyzes the reviewers' comments, and considers the appropriateness of the project toward fulfilling Commission goals, the proposal's completeness and conformity to application requirements. The staff, through a questions letter or email to you, raises issues and concerns and allows you the opportunity to respond. The staff makes recommendations to the Commission.

(e) *The Commission*. The Commission deliberates on all eligible proposals and recommends to the Archivist of the United States what action to take on each (fund, partially fund, endorse, reject, resubmit). By statute the Archivist chairs the Commission and has final authority to make or deny a grant.

§ 1206.64 What formal notification will I receive, and will it contain other information?

(a) Successful grant applicants will receive a formal grant award document. The document and attachments specify terms of the grant. NHPRC staff notifies project directors informally of awards and any conditions soon after the Archivist approves the grants.

(b) The grant period begins and ends on the dates specified in the award document.

[71 FR 27624, May 12, 2006, as amended at 75 FR 66319, Oct. 28, 2010]

Subpart F—Grant Administration

§ 1206.70 Who is responsible for administration of NHPRC grants?

The grantee institution and the institution-designated project director share primary responsibility for the administration of grants.

[71 FR 27624, May 12, 2006, as amended at 75 FR 66318, Oct. 28, 2010]

§ 1206.72 Where can I find the regulatory requirements that apply to NHPRC grants?

(a) In addition to this Part 1206, NARA has issued other regulations that apply to NHPRC grants in 36 CFR parts 1202, 1208, 1211, 1212 and 2 CFR part 2600 (which incorporates OMB's Uniform Administrative Requirements, Cost Principles, and Audit Requirements for Federal Awards guidance at 2 CFR part 200).

(b) The Commission provides additional policy guidance related to Title VI of the Civil Rights Act of 1964, regarding persons with limited English proficiency, at *http://www.archives.gov/nhprc/* and from the NHPRC staff.

[79 FR 76080, Dec. 19, 2014]

§ 1206.74 Do I need prior written approval for changes to the grant project?

You must obtain prior written approval from the NHPRC for most changes in the grant project and terms of the grant. Detailed instructions are found in *How to Administer an NHPRC Grant* available at *http://www.archives.gov/NHPRC* or from the NHPRC staff.

[71 FR 27624, May 12, 2006, as amended at 75 FR 66319, Oct. 28, 2010]

§ 1206.76 May I receive an extension to my grant project?

Yes, requests for extensions of the grant period should be signed by the grantee's authorized representative and submitted not more than two months before the scheduled end of the grant period. The NHPRC will not allow extensions unless a project is up-to-date in its submission of financial and narrative reports.

[75 FR 66319, Oct. 28, 2010]

§ 1206.80 What reports am I required to make?

(a) Grant recipients are generally required to submit annual financial reports and semi-annual narrative progress reports, as well as final financial and narrative reports at the conclusion of the grant period. The grant award document will specify the dates on which your reports are due. In order to fulfill its oversight and monitoring responsibilities, the NHPRC or Commission may require additional reports or information at any time during the grant. OMB Control Number 3095–0013 has been assigned to this information collection.

(b) Detailed reporting requirements are found in *How to Administer an NHPRC Grant* available at *http://www.archives.gov/NHPRC* or from the NHPRC staff.

[71 FR 27624, May 12, 2006, as amended at 75 FR 66319, Oct. 28, 2010]

§ 1206.82 What is the format and content of the financial report?

Grant recipients must submit financial reports on Standard Form 425 and have them signed by the grantee's authorized representative or by an appropriate institutional fiscal officer.

[75 FR 66319, Oct. 28, 2010]

§ 1206.84 What is the format and content of the narrative report?

(a) Interim narrative reports should state briefly the performance objectives and activities for the entire grant and then focus on those accomplished during the reporting period. The report should include a summary of project activities; whether the project proceeded on schedule; any revisions of the work plan, staffing pattern, or budget; any web address created by the project; and any other press releases, articles, or presentations relating to the grant project or its products. It should include an analysis of the objectives met during the reporting period and any objectives for the period that were not accomplished. For documentary editing projects, it also must include information about the publication of volumes and the completion of finding aids, as well as any work that is pending with publishers.

(b) The final report must provide a detailed assessment of the entire project, following the format in paragraph (a) of this section, including whether the performance objectives and goals set in the original proposal were realistic; whether there were unpredicted results or outcomes; whether the project encountered unexpected problems and how you faced them; and how you could have improved the project. You must discuss the project's impact, if any, on the grant-receiving institution and others. You must indicate whether all or part of the project activities will be continued after the end of the grant, whether any of these activities will be supported by institutional funds or by grant funds, and if the NHPRC grant was instrumental in obtaining these funds.

[71 FR 27624, May 12, 2006, as amended at 75 FR 66319, Oct. 28, 2010]

§ 1206.86 What additional materials must I submit with the final narrative report?

You must submit the materials required in the NHPRC grant announcements and in the grant award document.

[75 FR 66319, Oct. 28, 2010]

§ 1206.88 Does the NHPRC have any liability under a grant?

No, NARA and the Commission cannot assume any liability for accidents, illnesses, or claims arising out of any work undertaken with the assistance of the grant.

[71 FR 27624, May 12, 2006, as amended at 75 FR 66319, Oct. 28, 2010]

§ 1206.90 Must I acknowledge NHPRC grant support?

Yes, grantee institutions, grant project directors, or grant staff personnel may publish results of any work supported by an NHPRC grant without review by the Commission; however, publications or other products resulting from the project must acknowledge the assistance of the NHPRC grant and all copies paid for by grant funds must be distributed at a reasonable cost.

PART 1208—ENFORCEMENT OF NONDISCRIMINATION ON THE BASIS OF HANDICAP IN PROGRAMS OR ACTIVITIES CONDUCTED BY THE NATIONAL ARCHIVES AND RECORDS ADMINISTRATION

Sec.
1208.101 Purpose.
1208.102 Application.
1208.103 Definitions.
1208.104–1208.109 [Reserved]
1208.110 Self-evaluation.
1208.111 Notice.
1208.112–1208.129 [Reserved]
1208.130 General prohibitions against discrimination.
1208.131–1208.139 [Reserved]
1208.140 Employment.
1208.141–1208.148 [Reserved]
1208.149 Program accessibility: Discrimination prohibited.
1208.150 Program accessibility: Existing facilities.
1208.151 Program accessibility: New construction and alterations.
1208.152–1208.159 [Reserved]
1208.160 Communications.
1208.161–1208.169 [Reserved]
1208.170 Compliance procedures.
1208.171–1208.999 [Reserved]

AUTHORITY: 29 U.S.C. 794.

SOURCE: 53 FR 25884, 25885, July 8, 1988, unless otherwise noted.

§ 1208.101 Purpose.

The purpose of this regulation is to effectuate section 119 of the Rehabilitation, Comprehensive Services, and Developmental Disabilities Amendments of 1978, which amended section 504 of the Rehabilitation Act of 1973 to prohibit discrimination on the basis of handicap in programs or activities conducted by Executive agencies or the United States Postal Service.

§ 1208.102 Application.

This regulation (§§ 1208.101–1208.170) applies to all programs or activities conducted by the agency, except for programs or activities conducted outside the United States that do not involve individuals with handicaps in the United States.

§ 1208.103 Definitions.

For purposes of this regulation, the term—

Assistant Attorney General means the Assistant Attorney General, Civil Rights Division, United States Department of Justice.

Auxiliary aids means services or devices that enable persons with impaired sensory, manual, or speaking skills to have an equal opportunity to participate in, and enjoy the benefits of, programs or activities conducted by the agency. For example, auxiliary aids useful for persons with impaired vision include readers, Brailled materials, audio recordings, and other similar services and devices. Auxiliary aids useful for persons with impaired hearing include telephone handset amplifiers, telephones compatible with hearing aids, telecommunication devices for deaf persons (TDD's), interpreters, notetakers, written materials, and other similar services and devices.

Complete complaint means a written statement that contains the complainant's name and address and describes the agency's alleged discriminatory action in sufficient detail to inform the agency of the nature and date of the alleged violation of section 504. It shall be signed by the complainant or by someone authorized to do so on his or her behalf. Complaints filed on behalf of classes or third parties shall describe or identify (by name, if possible) the alleged victims of discrimination.

Facility means all or any portion of buildings, structures, equipment, roads, walks, parking lots, rolling stock or other conveyances, or other real or personal property.

Historic preservation programs means programs conducted by the agency that have preservation of historic properties as a primary purpose.

Historic properties means those properties that are listed or eligible for listing in the National Register of Historic Places or properties designated as historic under a statute of the appropriate State or local government body.

Individual with handicaps means any person who has a physical or mental impairment that substantially limits one or more major life activities, has a record of such an impairment, or is regarded as having such an impairment.

As used in this definition, the phrase:

(1) *Physical or mental impairment* includes—

(i) Any physiological disorder or condition, cosmetic disfigurement, or anatomical loss affecting one or more of the following body systems: Neurological; musculoskeletal; special sense organs; respiratory, including speech organs; cardiovascular; reproductive; digestive; genitourinary; hemic and lymphatic; skin; and endocrine; or

(ii) Any mental or psychological disorder, such as mental retardation, organic brain syndrome, emotional or mental illness, and specific learning disabilities. The term *physical or mental impairment* includes, but is not limited to, such diseases and conditions as orthopedic, visual, speech, and hearing impairments, cerebral palsy, epilepsy, muscular dystrophy, multiple sclerosis, cancer, heart disease, diabetes, mental retardation, emotional illness, and drug addiction and alcoholism.

(2) *Major life activities* includes functions such as caring for one's self, performing manual tasks, walking, seeing, hearing, speaking, breathing, learning, and working.

(3) *Has a record of such an impairment* means has a history of, or has been misclassified as having, a mental or physical impairment that substantially limits one or more major life activities.

(4) *Is regarded as having an impairment* means—

(i) Has a physical or mental impairment that does not substantially limit major life activities but is treated by the agency as constituting such a limitation;

(ii) Has a physical or mental impairment that substantially limits major life activities only as a result of the attitudes of others toward such impairment; or

(iii) Has none of the impairments defined in paragraph (i) of this definition but is treated by the agency as having such an impairment.

Qualified individual with handicaps means—

(1) With respect to preschool, elementary, or secondary education services provided by the agency, an individual with handicaps who is a member of a class of persons otherwise entitled by statute, regulation, or agency policy to receive education services from the agency;

(2) With respect to any other agency program or activity under which a person is required to perform services or to achieve a level of accomplishment, an individual with handicaps who meets the essential eligibility requirements and who can achieve the purpose of the program or activity without modifications in the program or activity that the agency can demonstrate would result in a fundamental alteration in its nature;

(3) With respect to any other program or activity, an individual with handicaps who meets the essential eligibility requirements for participation in, or receipt of benefits from, that program or activity; and

(4) *Qualified handicapped person* as that term is defined for purposes of employment in 29 CFR 1613.702(f), which is made applicable to this regulation by § 1208.140.

Section 504 means section 504 of the Rehabilitation Act of 1973 (Pub. L. 93–112, 87 Stat. 394 (29 U.S.C. 794)), as amended by the Rehabilitation Act Amendments of 1974 (Pub. L. 93–516, 88 Stat. 1617); the Rehabilitation, Comprehensive Services, and Developmental Disabilities Amendments of 1978 (Pub. L. 95–602, 92 Stat. 2955); and the Rehabilitation Act Amendments of 1986 (Pub. L. 99–506, 100 Stat. 1810). As used in this regulation, section 504 applies only to programs or activities conducted by Executive agencies and not to federally assisted programs.

Substantial impairment means a significant loss of the integrity of finished materials, design quality, or special character resulting from a permanent alteration.

§§ 1208.104–1208.109 [Reserved]

§ 1208.110 Self-evaluation.

(a) The agency shall, by September 6, 1989, evaluate its current policies and practices, and the effects thereof, that do not or may not meet the requirements of this regulation and, to the extent modification of any such policies and practices is required, the agency shall proceed to make the necessary modifications.

(b) The agency shall provide an opportunity to interested persons, including individuals with handicaps or organizations representing individuals with handicaps, to participate in the self-evaluation process by submitting comments (both oral and written).

(c) The agency shall, for at least three years following completion of the self-evaluation, maintain on file and make available for public inspection:

(1) A description of areas examined and any problems identified; and

(2) A description of any modifications made.

§ 1208.111 Notice.

The agency shall make available to employees, applicants, participants, beneficiaries, and other interested persons such information regarding the provisions of this regulation and its applicability to the programs or activities conducted by the agency, and make such information available to them in such manner as the head of the agency finds necessary to apprise such persons of the protections against discrimination assured them by section 504 and this regulation.

§§ 1208.112–1208.129 [Reserved]

§ 1208.130 General prohibitions against discrimination.

(a) No qualified individual with handicaps shall, on the basis of handicap, be excluded from participation in, be denied the benefits of, or otherwise be subjected to discrimination under any program or activity conducted by the agency.

(b)(1) The agency, in providing any aid, benefit, or service, may not, directly or through contractual, licensing, or other arrangements, on the basis of handicap—

(i) Deny a qualified individual with handicaps the opportunity to participate in or benefit from the aid, benefit, or service;

(ii) Afford a qualified individual with handicaps an opportunity to participate in or benefit from the aid, benefit, or service that is not equal to that afforded others;

(iii) Provide a qualified individual with handicaps with an aid, benefit, or service that is not as effective in affording equal opportunity to obtain the same result, to gain the same benefit, or to reach the same level of achievement as that provided to others;

(iv) Provide different or separate aid, benefits, or services to individuals with handicaps or to any class of individuals with handicaps than is provided to others unless such action is necessary to provide qualified individuals with handicaps with aid, benefits, or services that are as effective as those provided to others;

(v) Deny a qualified individual with handicaps the opportunity to participate as a member of planning or advisory boards;

(vi) Otherwise limit a qualified individual with handicaps in the enjoyment of any right, privilege, advantage, or opportunity enjoyed by others receiving the aid, benefit, or service.

(2) The agency may not deny a qualified individual with handicaps the opportunity to participate in programs or activities that are not separate or different, despite the existence of permissibly separate or different programs or activities.

(3) The agency may not, directly or through contractual or other arrangements, utilize criteria or methods of administration the purpose or effect of which would—

(i) Subject qualified individuals with handicaps to discrimination on the basis of handicap; or

(ii) Defeat or substantially impair accomplishment of the objectives of a program or activity with respect to individuals with handicaps.

(4) The agency may not, in determining the site or location of a facility, make selections the purpose or effect of which would—

(i) Exclude individuals with handicaps from, deny them the benefits of, or otherwise subject them to discrimination under any program or activity conducted by the agency; or

(ii) Defeat or substantially impair the accomplishment of the objectives of a program or activity with respect to individuals with handicaps.

(5) The agency, in the selection of procurement contractors, may not use criteria that subject qualified individuals with handicaps to discrimination on the basis of handicap.

(6) The agency may not administer a licensing or certification program in a manner that subjects qualified individuals with handicaps to discrimination on the basis of handicap, nor may the agency establish requirements for the programs or activities of licensees or certified entities that subject qualified individuals with handicaps to discrimination on the basis of handicap. However, the programs or activities of entities that are licensed or certified by the agency are not, themselves, covered by this regulation.

(c) The exclusion of nonhandicapped persons from the benefits of a program limited by Federal statute or Executive order to individuals with handicaps or the exclusion of a specific class of individuals with handicaps from a program limited by Federal statute or Executive order to a different class of individuals with handicaps is not prohibited by this regulation.

(d) The agency shall administer programs and activities in the most integrated setting appropriate to the needs of qualified individuals with handicaps.

§§ 1208.131–1208.139 [Reserved]

§ 1208.140 Employment.

No qualified individual with handicaps shall, on the basis of handicap, be subject to discrimination in employment under any program or activity conducted by the agency. The definitions, requirements, and procedures of section 501 of the Rehabilitation Act of 1973 (29 U.S.C. 791), as established by the Equal Employment Opportunity Commission in 29 CFR part 1613, shall apply to employment in federally conducted programs or activities.

§§ 1208.141–1208.148 [Reserved]

§ 1208.149 Program accessibility: Discrimination prohibited.

Except as otherwise provided in § 1208.150, no qualified individual with handicaps shall, because the agency's facilities are inaccessible to or unusable by individuals with handicaps, be denied the benefits of, be excluded from participation in, or otherwise be subjected to discrimination under any program or activity conducted by the agency.

§ 1208.150 Program accessibility: Existing facilities.

(a) *General.* The agency shall operate each program or activity so that the program or activity, when viewed in its entirety, is readily accessible to and usable by individuals with handicaps. This paragraph does not—

(1) Necessarily require the agency to make each of its existing facilities accessible to and usable by individuals with handicaps;

(2) In the case of historic preservation programs, require the agency to take any action that would result in a substantial impairment of significant historic features of an historic property; or

(3) Require the agency to take any action that it can demonstrate would result in a fundamental alteration in the nature of a program or activity or in undue financial and administrative burdens. In those circumstances where agency personnel believe that the proposed action would fundamentally alter the program or activity or would result in undue financial and administrative burdens, the agency has the burden of proving that compliance with § 1208.150(a) would result in such alteration or burdens. The decision that compliance would result in such alteration or burdens must be made by the agency head or his or her designee after considering all agency resources available for use in the funding and operation of the conducted program or activity, and must be accompanied by a written statement of the reasons for reaching that conclusion. If an action would result in such an alteration or such burdens, the agency shall take any other action that would not result in such an alteration or such burdens but would nevertheless ensure that individuals with handicaps receive the benefits and services of the program or activity.

(b) *Methods*—(1) *General.* The agency may comply with the requirements of this section through such means as redesign of equipment, reassignment of services to accessible buildings, assignment of aides to beneficiaries, home visits, delivery of services at alternate accessible sites, alteration of existing facilities and construction of new facilities, use of accessible rolling stock,

or any other methods that result in making its programs or activities readily accessible to and usable by individuals with handicaps. The agency is not required to make structural changes in existing facilities where other methods are effective in achieving compliance with this section. The agency, in making alterations to existing buildings, shall meet accessibility requirements to the extent compelled by the Architectural Barriers Act of 1968, as amended (42 U.S.C. 4151–4157), and any regulations implementing it. In choosing among available methods for meeting the requirements of this section, the agency shall give priority to those methods that offer programs and activities to qualified individuals with handicaps in the most integrated setting appropriate.

(2) *Historic preservation programs.* In meeting the requirements of § 1208.150(a) in historic preservation programs, the agency shall give priority to methods that provide physical access to individuals with handicaps. In cases where a physical alteration to an historic property is not required because of § 1208.150(a)(2) or (3), alternative methods of achieving program accessibility include—

(i) Using audio-visual materials and devices to depict those portions of an historic property that cannot otherwise be made accessible;

(ii) Assigning persons to guide individuals with handicaps into or through portions of historic properties that cannot otherwise be made accessible; or

(iii) Adopting other innovative methods.

(c) *Time period for compliance.* The agency shall comply with the obligations established under this section by November 7, 1988, except that where structural changes in facilities are undertaken, such changes shall be made by September 6, 1991, but in any event as expeditiously as possible.

(d) *Transition plan.* In the event that structural changes to facilities will be undertaken to achieve program accessibility, the agency shall develop, by March 6, 1989, a transition plan setting forth the steps necessary to complete such changes. The agency shall provide an opportunity to interested persons, including individuals with handicaps or organizations representing individuals with handicaps, to participate in the development of the transition plan by submitting comments (both oral and written). A copy of the transition plan shall be made available for public inspection. The plan shall, at a minimum—

(1) Identify physical obstacles in the agency's facilities that limit the accessibility of its programs or activities to individuals with handicaps;

(2) Describe in detail the methods that will be used to make the facilities accessible;

(3) Specify the schedule for taking the steps necessary to achieve compliance with this section and, if the time period of the transition plan is longer than one year, identify steps that will be taken during each year of the transition period; and

(4) Indicate the official responsible for implementation of the plan.

§ 1208.151 Program accessibility: New construction and alterations.

Each building or part of a building that is constructed or altered by, on behalf of, or for the use of the agency shall be designed, constructed, or altered so as to be readily accessible to and usable by individuals with handicaps. The definitions, requirements, and standards of the Architectural Barriers Act (42 U.S.C. 4151–4157), as established in 41 CFR 101–19.600 to 101–19.607, apply to buildings covered by this section.

§§ 1208.152–1208.159 [Reserved]

§ 1208.160 Communications.

(a) The agency shall take appropriate steps to ensure effective communication with applicants, participants, personnel of other Federal entities, and members of the public.

(1) The agency shall furnish appropriate auxiliary aids where necessary to afford an individual with handicaps an equal opportunity to participate in, and enjoy the benefits of, a program or activity conducted by the agency.

(i) In determining what type of auxiliary aid is necessary, the agency shall

give primary consideration to the requests of the individual with handicaps.

(ii) The agency need not provide individually prescribed devices, readers for personal use or study, or other devices of a personal nature.

(2) Where the agency communicates with applicants and beneficiaries by telephone, telecommunication devices for deaf persons (TDD's) or equally effective telecommunication systems shall be used to communicate with persons with impaired hearing.

(b) The agency shall ensure that interested persons, including persons with impaired vision or hearing, can obtain information as to the existence and location of accessible services, activities, and facilities.

(c) The agency shall provide signage at a primary entrance to each of its inaccessible facilities, directing users to a location at which they can obtain information about accessible facilities. The international symbol for accessibility shall be used at each primary entrance of an accessible facility.

(d) This section does not require the agency to take any action that it can demonstrate would result in a fundamental alteration in the nature of a program or activity or in undue financial and administrative burdens. In those circumstances where agency personnel believe that the proposed action would fundamentally alter the program or activity or would result in undue financial and administrative burdens, the agency has the burden of proving that compliance with §1208.160 would result in such alteration or burdens. The decision that compliance would result in such alteration or burdens must be made by the agency head or his or her designee after considering all agency resources available for use in the funding and operation of the conducted program or activity and must be accompanied by a written statement of the reasons for reaching that conclusion. If an action required to comply with this section would result in such an alteration or such burdens, the agency shall take any other action that would not result in such an alteration or such burdens but would nevertheless ensure that, to the maximum extent possible, individuals with handicaps receive the benefits and services of the program or activity.

§§ 1208.161–1208.169 [Reserved]

§ 1208.170 Compliance procedures.

(a) Except as provided in paragraph (b) of this section, this section applies to all allegations of discrimination on the basis of handicap in programs and activities conducted by the agency.

(b) The agency shall process complaints alleging violations of section 504 with respect to employment according to the procedures established by the Equal Employment Opportunity Commission in 29 CFR part 1613 pursuant to section 501 of the Rehabilitation Act of 1973 (29 U.S.C. 791).

(c) The Assistant Archivist for Management and Administration shall be responsible for coordinating implementation of this section. Compliants may be sent to National Archives and Records Administration (NA), Washington, DC 20408.

(d) The agency shall accept and investigate all complete complaints for which it has jurisdiction. All complete complaints must be filed within 180 days of the alleged act of discrimination. The agency may extend this time period for good cause.

(e) If the agency receives a complaint over which it does not have jurisdiction, it shall promptly notify the complainant and shall make reasonable efforts to refer the complaint to the appropriate Government entity.

(f) The agency shall notify the Architectural and Transportation Barriers Compliance Board upon receipt of any complaint alleging that a building or facility that is subject to the Architectural Barriers Act of 1968, as amended (42 U.S.C. 4151–4157), is not readily accessible to and usable by individuals with handicaps.

(g) Within 180 days of the receipt of a complete complaint for which it has jurisdiction, the agency shall notify the complainant of the results of the investigation in a letter containing—

(1) Findings of fact and conclusions of law;

(2) A description of a remedy for each violation found; and

(3) A notice of the right to appeal.

(h) Appeals of the findings of fact and conclusions of law or remedies must be filed by the complainant within 90 days of receipt from the agency of the letter required by §1208.170(g). The agency may extend this time for good cause.

(i) Timely appeals shall be accepted and processed by the head of the agency.

(j) The head of the agency shall notify the complainant of the results of the appeal within 60 days of the receipt of the request. If the head of the agency determines that additional information is needed from the complainant, he or she shall have 60 days from the date of receipt of the additional information to make his or her determination on the appeal.

(k) The time limits cited in paragraphs (g) and (j) of this section may be extended with the permission of the Assistant Attorney General.

(l) The agency may delegate its authority for conducting complaint investigations to other Federal agencies, except that the authority for making the final determination may not be delegated to another agency.

[53 FR 25884, 25885, July 8, 1988, as amended at 53 FR 25884, July 8, 1988]

§§ 1208.171–1208.999 [Reserved]

PART 1211—NONDISCRIMINATION ON THE BASIS OF SEX IN EDUCATION PROGRAMS OR ACTIVITIES RECEIVING FEDERAL FINANCIAL ASSISTANCE

Subpart A—Introduction

Sec.
1211.100 Purpose and effective date.
1211.105 Definitions.
1211.110 Remedial and affirmative action and self-evaluation.
1211.115 Assurance required.
1211.120 Transfers of property.
1211.125 Effect of other requirements.
1211.130 Effect of employment opportunities.
1211.135 Designation of responsible employee and adoption of grievance procedures.
1211.140 Dissemination of policy.

Subpart B—Coverage

1211.200 Application.
1211.205 Educational institutions and other entities controlled by religious organizations.
1211.210 Military and merchant marine educational institutions.
1211.215 Membership practices of certain organizations.
1211.220 Admissions.
1211.225 Educational institutions eligible to submit transition plans.
1211.230 Transition plans.
1211.235 Statutory amendments.

Subpart C—Discrimination on the Basis of Sex in Admission and Recruitment Prohibited

1211.300 Admission.
1211.305 Preference in admission.
1211.310 Recruitment.

Subpart D—Discrimination on the Basis of Sex in Education Programs or Activities Prohibited

1211.400 Education programs or activities.
1211.405 Housing.
1211.410 Comparable facilities.
1211.415 Access to course offerings.
1211.420 Access to schools operated by LEAs.
1211.425 Counseling and use of appraisal and counseling materials.
1211.430 Financial assistance.
1211.435 Employment assistance to students.
1211.440 Health and insurance benefits and services.
1211.445 Marital or parental status.
1211.450 Athletics.
1211.455 Textbooks and curricular material.

Subpart E—Discrimination on the Basis of Sex in Employment in Education Programs or Activities Prohibited

1211.500 Employment.
1211.505 Employment criteria.
1211.510 Recruitment.
1211.515 Compensation.
1211.520 Job classification and structure.
1211.525 Fringe benefits.
1211.530 Marital or parental status.
1211.535 Effect of state or local law or other requirements.
1211.540 Advertising.
1211.545 Pre-employment inquiries.
1211.550 Sex as a bona fide occupational qualification.

Subpart F—Procedures

1211.600 Notice of covered programs.
1211.605 Compliance information.
1211.610 Conduct of investigations.
1211.615 Procedure for effecting compliance.
1211.620 Hearings.

1211.625 Decisions and notices.
1211.630 Judicial review.
1211.635 Forms and instructions; coordination.

AUTHORITY: 20 U.S.C. 1681, 1682, 1683, 1685, 1686, 1687, 1688.

SOURCE: 65 FR 52865, 52886, Aug. 30, 2000, unless otherwise noted.

Subpart A—Introduction

§ 1211.100 Purpose and effective date.

The purpose of these Title IX regulations is to effectuate Title IX of the Education Amendments of 1972, as amended (except sections 904 and 906 of those Amendments) (20 U.S.C. 1681, 1682, 1683, 1685, 1686, 1687, 1688), which is designed to eliminate (with certain exceptions) discrimination on the basis of sex in any education program or activity receiving Federal financial assistance, whether or not such program or activity is offered or sponsored by an educational institution as defined in these Title IX regulations. The effective date of these Title IX regulations shall be September 29, 2000.

§ 1211.105 Definitions.

As used in these Title IX regulations, the term:

Administratively separate unit means a school, department, or college of an educational institution (other than a local educational agency) admission to which is independent of admission to any other component of such institution.

Admission means selection for part-time, full-time, special, associate, transfer, exchange, or any other enrollment, membership, or matriculation in or at an education program or activity operated by a recipient.

Applicant means one who submits an application, request, or plan required to be approved by an official of the Federal agency that awards Federal financial assistance, or by a recipient, as a condition to becoming a recipient.

Designated agency official means Executive Director, National Historical Publications and Records Commission.

Educational institution means a local educational agency (LEA) as defined by 20 U.S.C. 8801(18), a preschool, a private elementary or secondary school, or an applicant or recipient that is an institution of graduate higher education, an institution of undergraduate higher education, an institution of professional education, or an institution of vocational education, as defined in this section.

Federal financial assistance means any of the following, when authorized or extended under a law administered by the Federal agency that awards such assistance:

(1) A grant or loan of Federal financial assistance, including funds made available for:

(i) The acquisition, construction, renovation, restoration, or repair of a building or facility or any portion thereof; and

(ii) Scholarships, loans, grants, wages, or other funds extended to any entity for payment to or on behalf of students admitted to that entity, or extended directly to such students for payment to that entity.

(2) A grant of Federal real or personal property or any interest therein, including surplus property, and the proceeds of the sale or transfer of such property, if the Federal share of the fair market value of the property is not, upon such sale or transfer, properly accounted for to the Federal Government.

(3) Provision of the services of Federal personnel.

(4) Sale or lease of Federal property or any interest therein at nominal consideration, or at consideration reduced for the purpose of assisting the recipient or in recognition of public interest to be served thereby, or permission to use Federal property or any interest therein without consideration.

(5) Any other contract, agreement, or arrangement that has as one of its purposes the provision of assistance to any education program or activity, except a contract of insurance or guaranty.

Institution of graduate higher education means an institution that:

(1) Offers academic study beyond the bachelor of arts or bachelor of science degree, whether or not leading to a certificate of any higher degree in the liberal arts and sciences;

(2) Awards any degree in a professional field beyond the first professional degree (regardless of whether the first professional degree in such

field is awarded by an institution of undergraduate higher education or professional education); or

(3) Awards no degree and offers no further academic study, but operates ordinarily for the purpose of facilitating research by persons who have received the highest graduate degree in any field of study.

Institution of professional education means an institution (except any institution of undergraduate higher education) that offers a program of academic study that leads to a first professional degree in a field for which there is a national specialized accrediting agency recognized by the Secretary of Education.

Institution of undergraduate higher education means:

(1) An institution offering at least two but less than four years of college-level study beyond the high school level, leading to a diploma or an associate degree, or wholly or principally creditable toward a baccalaureate degree; or

(2) An institution offering academic study leading to a baccalaureate degree; or

(3) An agency or body that certifies credentials or offers degrees, but that may or may not offer academic study.

Institution of vocational education means a school or institution (except an institution of professional or graduate or undergraduate higher education) that has as its primary purpose preparation of students to pursue a technical, skilled, or semiskilled occupation or trade, or to pursue study in a technical field, whether or not the school or institution offers certificates, diplomas, or degrees and whether or not it offers full-time study.

Recipient means any State or political subdivision thereof, or any instrumentality of a State or political subdivision thereof, any public or private agency, institution, or organization, or other entity, or any person, to whom Federal financial assistance is extended directly or through another recipient and that operates an education program or activity that receives such assistance, including any subunit, successor, assignee, or transferee thereof.

Student means a person who has gained admission.

Title IX means Title IX of the Education Amendments of 1972, Public Law 92–318, 86 Stat. 235, 373 (codified as amended at 20 U.S.C. 1681–1688) (except sections 904 and 906 thereof), as amended by section 3 of Public Law 93–568, 88 Stat. 1855, by section 412 of the Education Amendments of 1976, Public Law 94–482, 90 Stat. 2234, and by Section 3 of Public Law 100–259, 102 Stat. 28, 28–29 (20 U.S.C. 1681, 1682, 1683, 1685, 1686, 1687, 1688).

Title IX regulations means the provisions set forth at 36 CFR 1211.100 through 1211.635.

Transition plan means a plan subject to the approval of the Secretary of Education pursuant to section 901(a)(2) of the Education Amendments of 1972, 20 U.S.C. 1681(a)(2), under which an educational institution operates in making the transition from being an educational institution that admits only students of one sex to being one that admits students of both sexes without discrimination.

§ 1211.110 Remedial and affirmative action and self-evaluation.

(a) *Remedial action*. If the designated agency official finds that a recipient has discriminated against persons on the basis of sex in an education program or activity, such recipient shall take such remedial action as the designated agency official deems necessary to overcome the effects of such discrimination.

(b) *Affirmative action*. In the absence of a finding of discrimination on the basis of sex in an education program or activity, a recipient may take affirmative action consistent with law to overcome the effects of conditions that resulted in limited participation therein by persons of a particular sex. Nothing in these Title IX regulations shall be interpreted to alter any affirmative action obligations that a recipient may have under Executive Order 11246, 3 CFR, 1964–1965 Comp., p. 339; as amended by Executive Order 11375, 3 CFR, 1966–1970 Comp., p. 684; as amended by Executive Order 11478, 3 CFR, 1966–1970 Comp., p. 803; as amended by Executive Order 12086, 3 CFR, 1978 Comp., p. 230; as amended by Executive Order 12107, 3 CFR, 1978 Comp., p. 264.

(c) *Self-evaluation.* Each recipient education institution shall, within one year of September 29, 2000:

(1) Evaluate, in terms of the requirements of these Title IX regulations, its current policies and practices and the effects thereof concerning admission of students, treatment of students, and employment of both academic and nonacademic personnel working in connection with the recipient's education program or activity;

(2) Modify any of these policies and practices that do not or may not meet the requirements of these Title IX regulations; and

(3) Take appropriate remedial steps to eliminate the effects of any discrimination that resulted or may have resulted from adherence to these policies and practices.

(d) *Availability of self-evaluation and related materials.* Recipients shall maintain on file for at least three years following completion of the evaluation required under paragraph (c) of this section, and shall provide to the designated agency official upon request, a description of any modifications made pursuant to paragraph (c)(2) of this section and of any remedial steps taken pursuant to paragraph (c)(3) of this section.

§ 1211.115 Assurance required.

(a) *General.* Either at the application stage or the award stage, Federal agencies must ensure that applications for Federal financial assistance or awards of Federal financial assistance contain, be accompanied by, or be covered by a specifically identified assurance from the applicant or recipient, satisfactory to the designated agency official, that each education program or activity operated by the applicant or recipient and to which these Title IX regulations apply will be operated in compliance with these Title IX regulations. An assurance of compliance with these Title IX regulations shall not be satisfactory to the designated agency official if the applicant or recipient to whom such assurance applies fails to commit itself to take whatever remedial action is necessary in accordance with § 1211.110(a) to eliminate existing discrimination on the basis of sex or to eliminate the effects of past discrimination whether occurring prior to or subsequent to the submission to the designated agency official of such assurance.

(b) *Duration of obligation.* (1) In the case of Federal financial assistance extended to provide real property or structures thereon, such assurance shall obligate the recipient or, in the case of a subsequent transfer, the transferee, for the period during which the real property or structures are used to provide an education program or activity.

(2) In the case of Federal financial assistance extended to provide personal property, such assurance shall obligate the recipient for the period during which it retains ownership or possession of the property.

(3) In all other cases such assurance shall obligate the recipient for the period during which Federal financial assistance is extended.

(c) *Form.* (1) The assurances required by paragraph (a) of this section, which may be included as part of a document that addresses other assurances or obligations, shall include that the applicant or recipient will comply with all applicable Federal statutes relating to nondiscrimination. These include but are not limited to: Title IX of the Education Amendments of 1972, as amended (20 U.S.C. 1681–1683, 1685–1688).

(2) The designated agency official will specify the extent to which such assurances will be required of the applicant's or recipient's subgrantees, contractors, subcontractors, transferees, or successors in interest.

§ 1211.120 Transfers of property.

If a recipient sells or otherwise transfers property financed in whole or in part with Federal financial assistance to a transferee that operates any education program or activity, and the Federal share of the fair market value of the property is not upon such sale or transfer properly accounted for to the Federal Government, both the transferor and the transferee shall be deemed to be recipients, subject to the provisions of §§ 1211.205 through 1211.235(a).

§ 1211.125 Effect of other requirements.

(a) *Effect of other Federal provisions.* The obligations imposed by these Title IX regulations are independent of, and do not alter, obligations not to discriminate on the basis of sex imposed by Executive Order 11246, 3 CFR, 1964–1965 Comp., p. 339; as amended by Executive Order 11375, 3 CFR, 1966–1970 Comp., p. 684; as amended by Executive Order 11478, 3 CFR, 1966–1970 Comp., p. 803; as amended by Executive Order 12087, 3 CFR, 1978 Comp., p. 230; as amended by Executive Order 12107, 3 CFR, 1978 Comp., p. 264; sections 704 and 855 of the Public Health Service Act (42 U.S.C. 295m, 298b-2); Title VII of the Civil Rights Act of 1964 (42 U.S.C. 2000e *et seq.*); the Equal Pay Act of 1963 (29 U.S.C. 206); and any other Act of Congress or Federal regulation.

(b) *Effect of State or local law or other requirements.* The obligation to comply with these Title IX regulations is not obviated or alleviated by any State or local law or other requirement that would render any applicant or student ineligible, or limit the eligibility of any applicant or student, on the basis of sex, to practice any occupation or profession.

(c) *Effect of rules or regulations of private organizations.* The obligation to comply with these Title IX regulations is not obviated or alleviated by any rule or regulation of any organization, club, athletic or other league, or association that would render any applicant or student ineligible to participate or limit the eligibility or participation of any applicant or student, on the basis of sex, in any education program or activity operated by a recipient and that receives Federal financial assistance.

§ 1211.130 Effect of employment opportunities.

The obligation to comply with these Title IX regulations is not obviated or alleviated because employment opportunities in any occupation or profession are or may be more limited for members of one sex than for members of the other sex.

§ 1211.135 Designation of responsible employee and adoption of grievance procedures.

(a) *Designation of responsible employee.* Each recipient shall designate at least one employee to coordinate its efforts to comply with and carry out its responsibilities under these Title IX regulations, including any investigation of any complaint communicated to such recipient alleging its noncompliance with these Title IX regulations or alleging any actions that would be prohibited by these Title IX regulations. The recipient shall notify all its students and employees of the name, office address, and telephone number of the employee or employees appointed pursuant to this paragraph.

(b) *Complaint procedure of recipient.* A recipient shall adopt and publish grievance procedures providing for prompt and equitable resolution of student and employee complaints alleging any action that would be prohibited by these Title IX regulations.

§ 1211.140 Dissemination of policy.

(a) *Notification of policy.* (1) Each recipient shall implement specific and continuing steps to notify applicants for admission and employment, students and parents of elementary and secondary school students, employees, sources of referral of applicants for admission and employment, and all unions or professional organizations holding collective bargaining or professional agreements with the recipient, that it does not discriminate on the basis of sex in the educational programs or activities that it operates, and that it is required by Title IX and these Title IX regulations not to discriminate in such a manner. Such notification shall contain such information, and be made in such manner, as the designated agency official finds necessary to apprise such persons of the protections against discrimination assured them by Title IX and these Title IX regulations, but shall state at least that the requirement not to discriminate in education programs or activities extends to employment therein, and to admission thereto unless §§ 1211.300 through 1211.310 do not apply to the recipient, and that inquiries concerning the application of Title IX

and these Title IX regulations to such recipient may be referred to the employee designated pursuant to § 1211.135, or to the designated agency official.

(2) Each recipient shall make the initial notification required by paragraph (a)(1) of this section within 90 days of September 29, 2000 or of the date these Title IX regulations first apply to such recipient, whichever comes later, which notification shall include publication in:

(i) Newspapers and magazines operated by such recipient or by student, alumnae, or alumni groups for or in connection with such recipient; and

(ii) Memoranda or other written communications distributed to every student and employee of such recipient.

(b) *Publications.* (1) Each recipient shall prominently include a statement of the policy described in paragraph (a) of this section in each announcement, bulletin, catalog, or application form that it makes available to any person of a type, described in paragraph (a) of this section, or which is otherwise used in connection with the recruitment of students or employees.

(2) A recipient shall not use or distribute a publication of the type described in paragraph (b)(1) of this section that suggests, by text or illustration, that such recipient treats applicants, students, or employees differently on the basis of sex except as such treatment is permitted by these Title IX regulations.

(c) *Distribution.* Each recipient shall distribute without discrimination on the basis of sex each publication described in paragraph (b)(1) of this section, and shall apprise each of its admission and employment recruitment representatives of the policy of nondiscrimination described in paragraph (a) of this section, and shall require such representatives to adhere to such policy.

Subpart B—Coverage

§ 1211.200 Application.

Except as provided in §§ 1211.205 through 1211.235(a), these Title IX regulations apply to every recipient and to each education program or activity operated by such recipient that receives Federal financial assistance.

§ 1211.205 Educational institutions and other entities controlled by religious organizations.

(a) *Exemption.* These Title IX regulations do not apply to any operation of an educational institution or other entity that is controlled by a religious organization to the extent that application of these Title IX regulations would not be consistent with the religious tenets of such organization.

(b) *Exemption claims.* An educational institution or other entity that wishes to claim the exemption set forth in paragraph (a) of this section shall do so by submitting in writing to the designated agency official a statement by the highest-ranking official of the institution, identifying the provisions of these Title IX regulations that conflict with a specific tenet of the religious organization.

§ 1211.210 Military and merchant marine educational institutions.

These Title IX regulations do not apply to an educational institution whose primary purpose is the training of individuals for a military service of the United States or for the merchant marine.

§ 1211.215 Membership practices of certain organizations.

(a) *Social fraternities and sororities.* These Title IX regulations do not apply to the membership practices of social fraternities and sororities that are exempt from taxation under section 501(a) of the Internal Revenue Code of 1954, 26 U.S.C. 501(a), the active membership of which consists primarily of students in attendance at institutions of higher education.

(b) *YMCA, YWCA, Girl Scouts, Boy Scouts, and Camp Fire Girls.* These Title IX regulations do not apply to the membership practices of the Young Men's Christian Association (YMCA), the Young Women's Christian Association (YWCA), the Girl Scouts, the Boy Scouts, and Camp Fire Girls.

(c) *Voluntary youth service organizations.* These Title IX regulations do not apply to the membership practices of a voluntary youth service organization

that is exempt from taxation under section 501(a) of the Internal Revenue Code of 1954, 26 U.S.C. 501(a), and the membership of which has been traditionally limited to members of one sex and principally to persons of less than nineteen years of age.

§ 1211.220 Admissions.

(a) Admissions to educational institutions prior to June 24, 1973, are not covered by these Title IX regulations.

(b) *Administratively separate units.* For the purposes only of this section, §§ 1211.225 and 1211.230, and §§ 1211.300 through 1211.310, each administratively separate unit shall be deemed to be an educational institution.

(c) *Application of §§ 1211.300 through 1211.310.* Except as provided in paragraphs (d) and (e) of this section, §§ 1211.300 through 1211.310 apply to each recipient. A recipient to which §§ 1211.300 through 1211.310 apply shall not discriminate on the basis of sex in admission or recruitment in violation of §§ 1211.300 through 1211.310.

(d) *Educational institutions.* Except as provided in paragraph (e) of this section as to recipients that are educational institutions, §§ 1211.300 through 1211.310 apply only to institutions of vocational education, professional education, graduate higher education, and public institutions of undergraduate higher education.

(e) *Public institutions of undergraduate higher education.* §§ 1211.300 through 1211.310 do not apply to any public institution of undergraduate higher education that traditionally and continually from its establishment has had a policy of admitting students of only one sex.

§ 1211.225 Educational institutions eligible to submit transition plans.

(a) *Application.* This section applies to each educational institution to which §§ 1211.300 through 1211.310 apply that:

(1) Admitted students of only one sex as regular students as of June 23, 1972; or

(2) Admitted students of only one sex as regular students as of June 23, 1965, but thereafter admitted, as regular students, students of the sex not admitted prior to June 23, 1965.

(b) *Provision for transition plans.* An educational institution to which this section applies shall not discriminate on the basis of sex in admission or recruitment in violation of §§ 1211.300 through 1211.310.

§ 1211.230 Transition plans.

(a) *Submission of plans.* An institution to which § 1211.225 applies and that is composed of more than one administratively separate unit may submit either a single transition plan applicable to all such units, or a separate transition plan applicable to each such unit.

(b) *Content of plans.* In order to be approved by the Secretary of Education, a transition plan shall:

(1) State the name, address, and Federal Interagency Committee on Education Code of the educational institution submitting such plan, the administratively separate units to which the plan is applicable, and the name, address, and telephone number of the person to whom questions concerning the plan may be addressed. The person who submits the plan shall be the chief administrator or president of the institution, or another individual legally authorized to bind the institution to all actions set forth in the plan.

(2) State whether the educational institution or administratively separate unit admits students of both sexes as regular students and, if so, when it began to do so.

(3) Identify and describe with respect to the educational institution or administratively separate unit any obstacles to admitting students without discrimination on the basis of sex.

(4) Describe in detail the steps necessary to eliminate as soon as practicable each obstacle so identified and indicate the schedule for taking these steps and the individual directly responsible for their implementation.

(5) Include estimates of the number of students, by sex, expected to apply for, be admitted to, and enter each class during the period covered by the plan.

(c) *Nondiscrimination.* No policy or practice of a recipient to which § 1211.225 applies shall result in treatment of applicants to or students of such recipient in violation of §§ 1211.300 through 1211.310 unless such treatment

is necessitated by an obstacle identified in paragraph (b)(3) of this section and a schedule for eliminating that obstacle has been provided as required by paragraph (b)(4) of this section.

(d) *Effects of past exclusion.* To overcome the effects of past exclusion of students on the basis of sex, each educational institution to which § 1211.225 applies shall include in its transition plan, and shall implement, specific steps designed to encourage individuals of the previously excluded sex to apply for admission to such institution. Such steps shall include instituting recruitment programs that emphasize the institution's commitment to enrolling students of the sex previously excluded.

§ 1211.235 Statutory amendments.

(a) This section, which applies to all provisions of these Title IX regulations, addresses statutory amendments to Title IX.

(b) These Title IX regulations shall not apply to or preclude:

(1) Any program or activity of the American Legion undertaken in connection with the organization or operation of any Boys State conference, Boys Nation conference, Girls State conference, or Girls Nation conference;

(2) Any program or activity of a secondary school or educational institution specifically for:

(i) The promotion of any Boys State conference, Boys Nation conference, Girls State conference, or Girls Nation conference; or

(ii) The selection of students to attend any such conference;

(3) Father-son or mother-daughter activities at an educational institution or in an education program or activity, but if such activities are provided for students of one sex, opportunities for reasonably comparable activities shall be provided to students of the other sex;

(4) Any scholarship or other financial assistance awarded by an institution of higher education to an individual because such individual has received such award in a single-sex pageant based upon a combination of factors related to the individual's personal appearance, poise, and talent. The pageant, however, must comply with other nondiscrimination provisions of Federal law.

(c) *Program or activity* or *program* means:

(1) All of the operations of any entity described in paragraphs (c)(1)(i) through (iv) of this section, any part of which is extended Federal financial assistance:

(i)(A) A department, agency, special purpose district, or other instrumentality of a State or of a local government; or

(B) The entity of such State or local government that distributes such assistance and each such department or agency (and each other State or local government entity) to which the assistance is extended, in the case of assistance to a State or local government;

(ii)(A) A college, university, or other postsecondary institution, or a public system of higher education; or

(B) A local educational agency (as defined in section 8801 of title 20), system of vocational education, or other school system;

(iii)(A) An entire corporation, partnership, or other private organization, or an entire sole proprietorship—

(*1*) If assistance is extended to such corporation, partnership, private organization, or sole proprietorship as a whole; or

(*2*) Which is principally engaged in the business of providing education, health care, housing, social services, or parks and recreation; or

(B) The entire plant or other comparable, geographically separate facility to which Federal financial assistance is extended, in the case of any other corporation, partnership, private organization, or sole proprietorship; or

(iv) Any other entity that is established by two or more of the entities described in paragraphs (c)(1)(i), (ii), or (iii) of this section.

(2)(i) *Program or activity* does not include any operation of an entity that is controlled by a religious organization if the application of 20 U.S.C. 1681 to such operation would not be consistent with the religious tenets of such organization.

(ii) For example, all of the operations of a college, university, or other postsecondary institution, including but

not limited to traditional educational operations, faculty and student housing, campus shuttle bus service, campus restaurants, the bookstore, and other commercial activities are part of a ''program or activity'' subject to these Title IX regulations if the college, university, or other institution receives Federal financial assistance.

(d)(1) Nothing in these Title IX regulations shall be construed to require or prohibit any person, or public or private entity, to provide or pay for any benefit or service, including the use of facilities, related to an abortion. Medical procedures, benefits, services, and the use of facilities, necessary to save the life of a pregnant woman or to address complications related to an abortion are not subject to this section.

(2) Nothing in this section shall be construed to permit a penalty to be imposed on any person or individual because such person or individual is seeking or has received any benefit or service related to a legal abortion. Accordingly, subject to paragraph (d)(1) of this section, no person shall be excluded from participation in, be denied the benefits of, or be subjected to discrimination under any academic, extracurricular, research, occupational training, employment, or other educational program or activity operated by a recipient that receives Federal financial assistance because such individual has sought or received, or is seeking, a legal abortion, or any benefit or service related to a legal abortion.

Subpart C—Discrimination on the Basis of Sex in Admission and Recruitment Prohibited

§ 1211.300 Admission.

(a) *General.* No person shall, on the basis of sex, be denied admission, or be subjected to discrimination in admission, by any recipient to which §§ 1211.300 through §§ 1211.310 apply, except as provided in § 1211.225 and § 1211.230.

(b) *Specific prohibitions.* (1) In determining whether a person satisfies any policy or criterion for admission, or in making any offer of admission, a recipient to which §§ 1211.300 through 1211.310 apply shall not:

(i) Give preference to one person over another on the basis of sex, by ranking applicants separately on such basis, or otherwise;

(ii) Apply numerical limitations upon the number or proportion of persons of either sex who may be admitted; or

(iii) Otherwise treat one individual differently from another on the basis of sex.

(2) A recipient shall not administer or operate any test or other criterion for admission that has a disproportionately adverse effect on persons on the basis of sex unless the use of such test or criterion is shown to predict validly success in the education program or activity in question and alternative tests or criteria that do not have such a disproportionately adverse effect are shown to be unavailable.

(c) *Prohibitions relating to marital or parental status.* In determining whether a person satisfies any policy or criterion for admission, or in making any offer of admission, a recipient to which §§ 1211.300 through 1211.310 apply:

(1) Shall not apply any rule concerning the actual or potential parental, family, or marital status of a student or applicant that treats persons differently on the basis of sex;

(2) Shall not discriminate against or exclude any person on the basis of pregnancy, childbirth, termination of pregnancy, or recovery therefrom, or establish or follow any rule or practice that so discriminates or excludes;

(3) Subject to § 1211.235(d), shall treat disabilities related to pregnancy, childbirth, termination of pregnancy, or recovery therefrom in the same manner and under the same policies as any other temporary disability or physical condition; and

(4) Shall not make pre-admission inquiry as to the marital status of an applicant for admission, including whether such applicant is ''Miss'' or ''Mrs.'' A recipient may make pre-admission inquiry as to the sex of an applicant for admission, but only if such inquiry is made equally of such applicants of both sexes and if the results of such inquiry are not used in connection with discrimination prohibited by these Title IX regulations.

§ 1211.305 Preference in admission.

A recipient to which §§ 1211.300 through 1211.310 apply shall not give preference to applicants for admission, on the basis of attendance at any educational institution or other school or entity that admits as students only or predominantly members of one sex, if the giving of such preference has the effect of discriminating on the basis of sex in violation of §§ 1211.300 through 1211.310.

§ 1211.310 Recruitment.

(a) *Nondiscriminatory recruitment.* A recipient to which §§ 1211.300 through 1211.310 apply shall not discriminate on the basis of sex in the recruitment and admission of students. A recipient may be required to undertake additional recruitment efforts for one sex as remedial action pursuant to § 1211.110(a), and may choose to undertake such efforts as affirmative action pursuant to § 1211.110(b).

(b) *Recruitment at certain institutions.* A recipient to which §§ 1211.300 through 1211.310 apply shall not recruit primarily or exclusively at educational institutions, schools, or entities that admit as students only or predominantly members of one sex, if such actions have the effect of discriminating on the basis of sex in violation of §§ 1211.300 through 1211.310.

Subpart D—Discrimination on the Basis of Sex in Education Programs or Activities Prohibited

§ 1211.400 Education programs or activities.

(a) *General.* Except as provided elsewhere in these Title IX regulations, no person shall, on the basis of sex, be excluded from participation in, be denied the benefits of, or be subjected to discrimination under any academic, extracurricular, research, occupational training, or other education program or activity operated by a recipient that receives Federal financial assistance. Sections 1211.400 through 1211.455 do not apply to actions of a recipient in connection with admission of its students to an education program or activity of a recipient to which §§ 1211.300 through 1211.310 do not apply, or an entity, not a recipient, to which §§ 1211.300 through 1211.310 would not apply if the entity were a recipient.

(b) *Specific prohibitions.* Except as provided in §§ 1211.400 through 1211.455, in providing any aid, benefit, or service to a student, a recipient shall not, on the basis of sex:

(1) Treat one person differently from another in determining whether such person satisfies any requirement or condition for the provision of such aid, benefit, or service;

(2) Provide different aid, benefits, or services or provide aid, benefits, or services in a different manner;

(3) Deny any person any such aid, benefit, or service;

(4) Subject any person to separate or different rules of behavior, sanctions, or other treatment;

(5) Apply any rule concerning the domicile or residence of a student or applicant, including eligibility for instate fees and tuition;

(6) Aid or perpetuate discrimination against any person by providing significant assistance to any agency, organization, or person that discriminates on the basis of sex in providing any aid, benefit, or service to students or employees;

(7) Otherwise limit any person in the enjoyment of any right, privilege, advantage, or opportunity.

(c) *Assistance administered by a recipient educational institution to study at a foreign institution.* A recipient educational institution may administer or assist in the administration of scholarships, fellowships, or other awards established by foreign or domestic wills, trusts, or similar legal instruments, or by acts of foreign governments and restricted to members of one sex, that are designed to provide opportunities to study abroad, and that are awarded to students who are already matriculating at or who are graduates of the recipient institution; *Provided,* that a recipient educational institution that administers or assists in the administration of such scholarships, fellowships, or other awards that are restricted to members of one sex provides, or otherwise makes available, reasonable opportunities for similar studies for members of the other sex. Such opportunities may be derived

from either domestic or foreign sources.

(d) *Aids, benefits or services not provided by recipient.* (1) This paragraph (d) applies to any recipient that requires participation by any applicant, student, or employee in any education program or activity not operated wholly by such recipient, or that facilitates, permits, or considers such participation as part of or equivalent to an education program or activity operated by such recipient, including participation in educational consortia and cooperative employment and student-teaching assignments.

(2) Such recipient:

(i) Shall develop and implement a procedure designed to assure itself that the operator or sponsor of such other education program or activity takes no action affecting any applicant, student, or employee of such recipient that these Title IX regulations would prohibit such recipient from taking; and

(ii) Shall not facilitate, require, permit, or consider such participation if such action occurs.

§ 1211.405 Housing.

(a) *Generally.* A recipient shall not, on the basis of sex, apply different rules or regulations, impose different fees or requirements, or offer different services or benefits related to housing, except as provided in this section (including housing provided only to married students).

(b) *Housing provided by recipient.* (1) A recipient may provide separate housing on the basis of sex.

(2) Housing provided by a recipient to students of one sex, when compared to that provided to students of the other sex, shall be as a whole:

(i) Proportionate in quantity to the number of students of that sex applying for such housing; and

(ii) Comparable in quality and cost to the student.

(c) *Other housing.* (1) A recipient shall not, on the basis of sex, administer different policies or practices concerning occupancy by its students of housing other than that provided by such recipient.

(2)(i) A recipient which, through solicitation, listing, approval of housing, or otherwise, assists any agency, organization, or person in making housing available to any of its students, shall take such reasonable action as may be necessary to assure itself that such housing as is provided to students of one sex, when compared to that provided to students of the other sex, is as a whole:

(A) Proportionate in quantity; and

(B) Comparable in quality and cost to the student.

(ii) A recipient may render such assistance to any agency, organization, or person that provides all or part of such housing to students of only one sex.

§ 1211.410 Comparable facilities.

A recipient may provide separate toilet, locker room, and shower facilities on the basis of sex, but such facilities provided for students of one sex shall be comparable to such facilities provided for students of the other sex.

§ 1211.415 Access to course offerings.

(a) A recipient shall not provide any course or otherwise carry out any of its education program or activity separately on the basis of sex, or require or refuse participation therein by any of its students on such basis, including health, physical education, industrial, business, vocational, technical, home economics, music, and adult education courses.

(b)(1) With respect to classes and activities in physical education at the elementary school level, the recipient shall comply fully with this section as expeditiously as possible but in no event later than one year from September 29, 2000. With respect to physical education classes and activities at the secondary and post-secondary levels, the recipient shall comply fully with this section as expeditiously as possible but in no event later than three years from September 29, 2000.

(2) This section does not prohibit grouping of students in physical education classes and activities by ability as assessed by objective standards of individual performance developed and applied without regard to sex.

(3) This section does not prohibit separation of students by sex within physical education classes or activities during participation in wrestling, boxing,

rugby, ice hockey, football, basketball, and other sports the purpose or major activity of which involves bodily contact.

(4) Where use of a single standard of measuring skill or progress in a physical education class has an adverse effect on members of one sex, the recipient shall use appropriate standards that do not have such effect.

(5) Portions of classes in elementary and secondary schools, or portions of education programs or activities, that deal exclusively with human sexuality may be conducted in separate sessions for boys and girls.

(6) Recipients may make requirements based on vocal range or quality that may result in a chorus or choruses of one or predominantly one sex.

§ 1211.420 Access to schools operated by LEAs.

A recipient that is a local educational agency shall not, on the basis of sex, exclude any person from admission to:

(a) Any institution of vocational education operated by such recipient; or

(b) Any other school or educational unit operated by such recipient, unless such recipient otherwise makes available to such person, pursuant to the same policies and criteria of admission, courses, services, and facilities comparable to each course, service, and facility offered in or through such schools.

§ 1211.425 Counseling and use of appraisal and counseling materials.

(a) *Counseling.* A recipient shall not discriminate against any person on the basis of sex in the counseling or guidance of students or applicants for admission.

(b) *Use of appraisal and counseling materials.* A recipient that uses testing or other materials for appraising or counseling students shall not use different materials for students on the basis of their sex or use materials that permit or require different treatment of students on such basis unless such different materials cover the same occupations and interest areas and the use of such different materials is shown to be essential to eliminate sex bias. Recipients shall develop and use internal procedures for ensuring that such materials do not discriminate on the basis of sex. Where the use of a counseling test or other instrument results in a substantially disproportionate number of members of one sex in any particular course of study or classification, the recipient shall take such action as is necessary to assure itself that such disproportion is not the result of discrimination in the instrument or its application.

(c) *Disproportion in classes.* Where a recipient finds that a particular class contains a substantially disproportionate number of individuals of one sex, the recipient shall take such action as is necessary to assure itself that such disproportion is not the result of discrimination on the basis of sex in counseling or appraisal materials or by counselors.

§ 1211.430 Financial assistance.

(a) *General.* Except as provided in paragraphs (b) and (c) of this section, in providing financial assistance to any of its students, a recipient shall not:

(1) On the basis of sex, provide different amounts or types of such assistance, limit eligibility for such assistance that is of any particular type or source, apply different criteria, or otherwise discriminate;

(2) Through solicitation, listing, approval, provision of facilities, or other services, assist any foundation, trust, agency, organization, or person that provides assistance to any of such recipient's students in a manner that discriminates on the basis of sex; or

(3) Apply any rule or assist in application of any rule concerning eligibility for such assistance that treats persons of one sex differently from persons of the other sex with regard to marital or parental status.

(b) *Financial aid established by certain legal instruments.* (1) A recipient may administer or assist in the administration of scholarships, fellowships, or other forms of financial assistance established pursuant to domestic or foreign wills, trusts, bequests, or similar legal instruments or by acts of a foreign government that require that awards be made to members of a particular sex specified therein; *Provided,* that the overall effect of the award of

such sex-restricted scholarships, fellowships, and other forms of financial assistance does not discriminate on the basis of sex.

(2) To ensure nondiscriminatory awards of assistance as required in paragraph (b)(1) of this section, recipients shall develop and use procedures under which:

(i) Students are selected for award of financial assistance on the basis of nondiscriminatory criteria and not on the basis of availability of funds restricted to members of a particular sex;

(ii) An appropriate sex-restricted scholarship, fellowship, or other form of financial assistance is allocated to each student selected under paragraph (b)(2)(i) of this section; and

(iii) No student is denied the award for which he or she was selected under paragraph (b)(2)(i) of this section because of the absence of a scholarship, fellowship, or other form of financial assistance designated for a member of that student's sex.

(c) *Athletic scholarships.* (1) To the extent that a recipient awards athletic scholarships or grants-in-aid, it must provide reasonable opportunities for such awards for members of each sex in proportion to the number of students of each sex participating in interscholastic or intercollegiate athletics.

(2) A recipient may provide separate athletic scholarships or grants-in-aid for members of each sex as part of separate athletic teams for members of each sex to the extent consistent with this paragraph (c) and § 1211.450.

§ 1211.435 Employment assistance to students.

(a) *Assistance by recipient in making available outside employment.* A recipient that assists any agency, organization, or person in making employment available to any of its students:

(1) Shall assure itself that such employment is made available without discrimination on the basis of sex; and

(2) Shall not render such services to any agency, organization, or person that discriminates on the basis of sex in its employment practices.

(b) *Employment of students by recipients.* A recipient that employs any of its students shall not do so in a manner that violates §§ 1211.500 through 1211.550.

§ 1211.440 Health and insurance benefits and services.

Subject to § 1211.235(d), in providing a medical, hospital, accident, or life insurance benefit, service, policy, or plan to any of its students, a recipient shall not discriminate on the basis of sex, or provide such benefit, service, policy, or plan in a manner that would violate §§ 1211.500 through 1211.550 if it were provided to employees of the recipient. This section shall not prohibit a recipient from providing any benefit or service that may be used by a different proportion of students of one sex than of the other, including family planning services. However, any recipient that provides full coverage health service shall provide gynecological care.

§ 1211.445 Marital or parental status.

(a) *Status generally.* A recipient shall not apply any rule concerning a student's actual or potential parental, family, or marital status that treats students differently on the basis of sex.

(b) *Pregnancy and related conditions.* (1) A recipient shall not discriminate against any student, or exclude any student from its education program or activity, including any class or extracurricular activity, on the basis of such student's pregnancy, childbirth, false pregnancy, termination of pregnancy, or recovery therefrom, unless the student requests voluntarily to participate in a separate portion of the program or activity of the recipient.

(2) A recipient may require such a student to obtain the certification of a physician that the student is physically and emotionally able to continue participation as long as such a certification is required of all students for other physical or emotional conditions requiring the attention of a physician.

(3) A recipient that operates a portion of its education program or activity separately for pregnant students, admittance to which is completely voluntary on the part of the student as provided in paragraph (b)(1) of this section, shall ensure that the separate portion is comparable to that offered to non-pregnant students.

(4) Subject to § 1211.235(d), a recipient shall treat pregnancy, childbirth, false pregnancy, termination of pregnancy and recovery therefrom in the same manner and under the same policies as any other temporary disability with respect to any medical or hospital benefit, service, plan, or policy that such recipient administers, operates, offers, or participates in with respect to students admitted to the recipient's educational program or activity.

(5) In the case of a recipient that does not maintain a leave policy for its students, or in the case of a student who does not otherwise qualify for leave under such a policy, a recipient shall treat pregnancy, childbirth, false pregnancy, termination of pregnancy, and recovery therefrom as a justification for a leave of absence for as long a period of time as is deemed medically necessary by the student's physician, at the conclusion of which the student shall be reinstated to the status that she held when the leave began.

§ 1211.450 Athletics.

(a) *General.* No person shall, on the basis of sex, be excluded from participation in, be denied the benefits of, be treated differently from another person, or otherwise be discriminated against in any interscholastic, intercollegiate, club, or intramural athletics offered by a recipient, and no recipient shall provide any such athletics separately on such basis.

(b) *Separate teams.* Notwithstanding the requirements of paragraph (a) of this section, a recipient may operate or sponsor separate teams for members of each sex where selection for such teams is based upon competitive skill or the activity involved is a contact sport. However, where a recipient operates or sponsors a team in a particular sport for members of one sex but operates or sponsors no such team for members of the other sex, and athletic opportunities for members of that sex have previously been limited, members of the excluded sex must be allowed to try out for the team offered unless the sport involved is a contact sport. For the purposes of these Title IX regulations, contact sports include boxing, wrestling, rugby, ice hockey, football, basketball, and other sports the purpose or major activity of which involves bodily contact.

(c) *Equal opportunity.* (1) A recipient that operates or sponsors interscholastic, intercollegiate, club, or intramural athletics shall provide equal athletic opportunity for members of both sexes. In determining whether equal opportunities are available, the designated agency official will consider, among other factors:

(i) Whether the selection of sports and levels of competition effectively accommodate the interests and abilities of members of both sexes;

(ii) The provision of equipment and supplies;

(iii) Scheduling of games and practice time;

(iv) Travel and per diem allowance;

(v) Opportunity to receive coaching and academic tutoring;

(vi) Assignment and compensation of coaches and tutors;

(vii) Provision of locker rooms, practice, and competitive facilities;

(viii) Provision of medical and training facilities and services;

(ix) Provision of housing and dining facilities and services;

(x) Publicity.

(2) For purposes of paragraph (c)(1) of this section, unequal aggregate expenditures for members of each sex or unequal expenditures for male and female teams if a recipient operates or sponsors separate teams will not constitute noncompliance with this section, but the designated agency official may consider the failure to provide necessary funds for teams for one sex in assessing equality of opportunity for members of each sex.

(d) *Adjustment period.* A recipient that operates or sponsors interscholastic, intercollegiate, club, or intramural athletics at the elementary school level shall comply fully with this section as expeditiously as possible but in no event later than one year from September 29, 2000. A recipient that operates or sponsors interscholastic, intercollegiate, club, or intramural athletics at the secondary or postsecondary school level shall comply fully with this section as expeditiously as possible but in no event later than three years from September 29, 2000.

§ 1211.455 Textbooks and curricular material.

Nothing in these Title IX regulations shall be interpreted as requiring or prohibiting or abridging in any way the use of particular textbooks or curricular materials.

Subpart E—Discrimination on the Basis of Sex in Employment in Education Programs or Activities Prohibited

§ 1211.500 Employment.

(a) *General*. (1) No person shall, on the basis of sex, be excluded from participation in, be denied the benefits of, or be subjected to discrimination in employment, or recruitment, consideration, or selection therefor, whether full-time or part-time, under any education program or activity operated by a recipient that receives Federal financial assistance.

(2) A recipient shall make all employment decisions in any education program or activity operated by such recipient in a nondiscriminatory manner and shall not limit, segregate, or classify applicants or employees in any way that could adversely affect any applicant's or employee's employment opportunities or status because of sex.

(3) A recipient shall not enter into any contractual or other relationship which directly or indirectly has the effect of subjecting employees or students to discrimination prohibited by §§ 1211.500 through 1211.550, including relationships with employment and referral agencies, with labor unions, and with organizations providing or administering fringe benefits to employees of the recipient.

(4) A recipient shall not grant preferences to applicants for employment on the basis of attendance at any educational institution or entity that admits as students only or predominantly members of one sex, if the giving of such preferences has the effect of discriminating on the basis of sex in violation of these Title IX regulations.

(b) *Application*. The provisions of §§ 1211.500 through 1211.550 apply to:

(1) Recruitment, advertising, and the process of application for employment;

(2) Hiring, upgrading, promotion, consideration for and award of tenure, demotion, transfer, layoff, termination, application of nepotism policies, right of return from layoff, and rehiring;

(3) Rates of pay or any other form of compensation, and changes in compensation;

(4) Job assignments, classifications, and structure, including position descriptions, lines of progression, and seniority lists;

(5) The terms of any collective bargaining agreement;

(6) Granting and return from leaves of absence, leave for pregnancy, childbirth, false pregnancy, termination of pregnancy, leave for persons of either sex to care for children or dependents, or any other leave;

(7) Fringe benefits available by virtue of employment, whether or not administered by the recipient;

(8) Selection and financial support for training, including apprenticeship, professional meetings, conferences, and other related activities, selection for tuition assistance, selection for sabbaticals and leaves of absence to pursue training;

(9) Employer-sponsored activities, including social or recreational programs; and

(10) Any other term, condition, or privilege of employment.

§ 1211.505 Employment criteria.

A recipient shall not administer or operate any test or other criterion for any employment opportunity that has a disproportionately adverse effect on persons on the basis of sex unless:

(a) Use of such test or other criterion is shown to predict validly successful performance in the position in question; and

(b) Alternative tests or criteria for such purpose, which do not have such disproportionately adverse effect, are shown to be unavailable.

§ 1211.510 Recruitment.

(a) *Nondiscriminatory recruitment and hiring*. A recipient shall not discriminate on the basis of sex in the recruitment and hiring of employees. Where a recipient has been found to be presently discriminating on the basis of sex

in the recruitment or hiring of employees, or has been found to have so discriminated in the past, the recipient shall recruit members of the sex so discriminated against so as to overcome the effects of such past or present discrimination.

(b) *Recruitment patterns.* A recipient shall not recruit primarily or exclusively at entities that furnish as applicants only or predominantly members of one sex if such actions have the effect of discriminating on the basis of sex in violation of §§ 1211.500 through 1211.550.

§ 1211.515 Compensation.

A recipient shall not make or enforce any policy or practice that, on the basis of sex:

(a) Makes distinctions in rates of pay or other compensation;

(b) Results in the payment of wages to employees of one sex at a rate less than that paid to employees of the opposite sex for equal work on jobs the performance of which requires equal skill, effort, and responsibility, and that are performed under similar working conditions.

§ 1211.520 Job classification and structure.

A recipient shall not:

(a) Classify a job as being for males or for females;

(b) Maintain or establish separate lines of progression, seniority lists, career ladders, or tenure systems based on sex; or

(c) Maintain or establish separate lines of progression, seniority systems, career ladders, or tenure systems for similar jobs, position descriptions, or job requirements that classify persons on the basis of sex, unless sex is a bona fide occupational qualification for the positions in question as set forth in § 1211.550.

§ 1211.525 Fringe benefits.

(a) *''Fringe benefits'' defined.* For purposes of these Title IX regulations, *fringe benefits* means: Any medical, hospital, accident, life insurance, or retirement benefit, service, policy or plan, any profit-sharing or bonus plan, leave, and any other benefit or service of employment not subject to the provision of § 1211.515.

(b) *Prohibitions.* A recipient shall not:

(1) Discriminate on the basis of sex with regard to making fringe benefits available to employees or make fringe benefits available to spouses, families, or dependents of employees differently upon the basis of the employee's sex;

(2) Administer, operate, offer, or participate in a fringe benefit plan that does not provide for equal periodic benefits for members of each sex and for equal contributions to the plan by such recipient for members of each sex; or

(3) Administer, operate, offer, or participate in a pension or retirement plan that establishes different optional or compulsory retirement ages based on sex or that otherwise discriminates in benefits on the basis of sex.

§ 1211.530 Marital or parental status.

(a) *General.* A recipient shall not apply any policy or take any employment action:

(1) Concerning the potential marital, parental, or family status of an employee or applicant for employment that treats persons differently on the basis of sex; or

(2) Which is based upon whether an employee or applicant for employment is the head of household or principal wage earner in such employee's or applicant's family unit.

(b) *Pregnancy.* A recipient shall not discriminate against or exclude from employment any employee or applicant for employment on the basis of pregnancy, childbirth, false pregnancy, termination of pregnancy, or recovery therefrom.

(c) *Pregnancy as a temporary disability.* Subject to § 1211.235(d), a recipient shall treat pregnancy, childbirth, false pregnancy, termination of pregnancy, recovery therefrom, and any temporary disability resulting therefrom as any other temporary disability for all job-related purposes, including commencement, duration, and extensions of leave, payment of disability income, accrual of seniority and any other benefit or service, and reinstatement, and under any fringe benefit offered to employees by virtue of employment.

(d) *Pregnancy leave.* In the case of a recipient that does not maintain a

leave policy for its employees, or in the case of an employee with insufficient leave or accrued employment time to qualify for leave under such a policy, a recipient shall treat pregnancy, childbirth, false pregnancy, termination of pregnancy, and recovery therefrom as a justification for a leave of absence without pay for a reasonable period of time, at the conclusion of which the employee shall be reinstated to the status that she held when the leave began or to a comparable position, without decrease in rate of compensation or loss of promotional opportunities, or any other right or privilege of employment.

§ 1211.535 Effect of state or local law or other requirements.

(a) *Prohibitory requirements.* The obligation to comply with §§ 1211.500 through 1211.550 is not obviated or alleviated by the existence of any State or local law or other requirement that imposes prohibitions or limits upon employment of members of one sex that are not imposed upon members of the other sex.

(b) *Benefits.* A recipient that provides any compensation, service, or benefit to members of one sex pursuant to a State or local law or other requirement shall provide the same compensation, service, or benefit to members of the other sex.

§ 1211.540 Advertising.

A recipient shall not in any advertising related to employment indicate preference, limitation, specification, or discrimination based on sex unless sex is a bona fide occupational qualification for the particular job in question.

§ 1211.545 Pre-employment inquiries.

(a) *Marital status.* A recipient shall not make pre-employment inquiry as to the marital status of an applicant for employment, including whether such applicant is ''Miss'' or ''Mrs.''

(b) *Sex.* A recipient may make pre-employment inquiry as to the sex of an applicant for employment, but only if such inquiry is made equally of such applicants of both sexes and if the results of such inquiry are not used in connection with discrimination prohibited by these Title IX regulations.

§ 1211.550 Sex as a bona fide occupational qualification.

A recipient may take action otherwise prohibited by §§ 1211.500 through 1211.550 provided it is shown that sex is a bona fide occupational qualification for that action, such that consideration of sex with regard to such action is essential to successful operation of the employment function concerned. A recipient shall not take action pursuant to this section that is based upon alleged comparative employment characteristics or stereotyped characterizations of one or the other sex, or upon preference based on sex of the recipient, employees, students, or other persons, but nothing contained in this section shall prevent a recipient from considering an employee's sex in relation to employment in a locker room or toilet facility used only by members of one sex.

Subpart F—Procedures

§ 1211.600 Notice of covered programs.

Within 60 days of September 29, 2000, each Federal agency that awards Federal financial assistance shall publish in the FEDERAL REGISTER a notice of the programs covered by these Title IX regulations. Each such Federal agency shall periodically republish the notice of covered programs to reflect changes in covered programs. Copies of this notice also shall be made available upon request to the Federal agency's office that enforces Title IX.

§ 1211.605 Compliance information.

(a) *Cooperation and assistance.* The designated agency official shall to the fullest extent practicable seek the cooperation of recipients in obtaining compliance with these Title IX regulations and shall provide assistance and guidance to recipients to help them comply voluntarily with these Title IX regulations.

(b) *Compliance reports.* Each recipient shall keep such records and submit to the designated agency official (or designee) timely, complete, and accurate compliance reports at such times, and in such form and containing such information, as the designated agency official (or designee) may determine to be

necessary to enable the official to ascertain whether the recipient has complied or is complying with these Title IX regulations. In the case of any program under which a primary recipient extends Federal financial assistance to any other recipient, such other recipient shall also submit such compliance reports to the primary recipient as may be necessary to enable the primary recipient to carry out its obligations under these Title IX regulations.

(c) *Access to sources of information.* Each recipient shall permit access by the designated agency official (or designee) during normal business hours to such of its books, records, accounts, and other sources of information, and its facilities as may be pertinent to ascertain compliance with these Title IX regulations. Where any information required of a recipient is in the exclusive possession of any other agency, institution, or person and this agency, institution, or person shall fail or refuse to furnish this information the recipient shall so certify in its report and shall set forth what efforts it has made to obtain the information. Asserted considerations of privacy or confidentiality may not operate to bar the agency from evaluating or seeking to enforce compliance with these Title IX regulations. Information of a confidential nature obtained in connection with compliance evaluation or enforcement shall not be disclosed except where necessary in formal enforcement proceedings or where otherwise required by law.

(d) *Information to beneficiaries and participants.* Each recipient shall make available to participants, beneficiaries, and other interested persons such information regarding the provisions of these Title IX regulations and their applicability to the program for which the recipient receives Federal financial assistance, and make such information available to them in such manner, as the designated agency official finds necessary to apprise such persons of the protections against discrimination assured them by Title IX and these Title IX regulations.

[65 FR 52886, Aug. 30, 2000]

§ 1211.610 Conduct of investigations.

(a) *Periodic compliance reviews.* The designated agency official (or designee) shall from time to time review the practices of recipients to determine whether they are complying with these Title IX regulations.

(b) *Complaints.* Any person who believes himself or herself or any specific class of individuals to be subjected to discrimination prohibited by these Title IX regulations may by himself or herself or by a representative file with the designated agency official (or designee) a written complaint. A complaint must be filed not later than 180 days from the date of the alleged discrimination, unless the time for filing is extended by the designated agency official (or designee).

(c) *Investigations.* The designated agency official (or designee) will make a prompt investigation whenever a compliance review, report, complaint, or any other information indicates a possible failure to comply with these Title IX regulations. The investigation should include, where appropriate, a review of the pertinent practices and policies of the recipient, the circumstances under which the possible noncompliance with these Title IX regulations occurred, and other factors relevant to a determination as to whether the recipient has failed to comply with these Title IX regulations.

(d) *Resolution of matters.* (1) If an investigation pursuant to paragraph (c) of this section indicates a failure to comply with these Title IX regulations, the designated agency official (or designee) will so inform the recipient and the matter will be resolved by informal means whenever possible. If it has been determined that the matter cannot be resolved by informal means, action will be taken as provided for in § 1211.615.

(2) If an investigation does not warrant action pursuant to paragraph (d)(1) of this section the designated agency official (or designee) will so inform the recipient and the complainant, if any, in writing.

(e) *Intimidatory or retaliatory acts prohibited.* No recipient or other person shall intimidate, threaten, coerce, or discriminate against any individual for the purpose of interfering with any right or privilege secured by Title IX

or these Title IX regulations, or because he or she has made a complaint, testified, assisted, or participated in any manner in an investigation, proceeding, or hearing under these Title IX regulations. The identity of complainants shall be kept confidential except to the extent necessary to carry out the purposes of these Title IX regulations, including the conduct of any investigation, hearing, or judicial proceeding arising under these Title IX regulations.

[65 FR 52887, Aug. 30, 2000]

§ 1211.615 Procedure for effecting compliance.

(a) *General*. If there appears to be a failure or threatened failure to comply with these Title IX regulations, and if the noncompliance or threatened noncompliance cannot be corrected by informal means, compliance with these Title IX regulations may be effected by the suspension or termination of or refusal to grant or to continue Federal financial assistance or by any other means authorized by law. Such other means may include, but are not limited to:

(1) A reference to the Department of Justice with a recommendation that appropriate proceedings be brought to enforce any rights of the United States under any law of the United States, or any assurance or other contractual undertaking; and

(2) Any applicable proceeding under State or local law.

(b) *Noncompliance with § 1211.115*. If an applicant fails or refuses to furnish an assurance or otherwise fails or refuses to comply with a requirement imposed by or pursuant to § 1211.115, Federal financial assistance may be refused in accordance with the procedures of paragraph (c) of this section. The agency shall not be required to provide assistance in such a case during the pendency of the administrative proceedings under paragraph (c) of this section except that the agency shall continue assistance during the pendency of such proceedings where such assistance is due and payable pursuant to an application therefor approved prior to September 29, 2000.

(c) *Termination of or refusal to grant or to continue Federal financial assistance*. (1) No order suspending, terminating, or refusing to grant or continue Federal financial assistance shall become effective until:

(i) The designated agency official has advised the applicant or recipient of its failure to comply and has determined that compliance cannot be secured by voluntary means;

(ii) There has been an express finding on the record, after opportunity for hearing, of a failure by the applicant or recipient to comply with a requirement imposed by or pursuant to these Title IX regulations; and

(iii) The expiration of 30 days after the Archivist has filed with the committee of the House, and the committee of the Senate having legislative jurisdiction over the program involved, a full written report of the circumstances and the grounds for such action.

(2) Any action to suspend or terminate or to refuse to grant or to continue Federal financial assistance shall be limited to the particular political entity, or part thereof, or other applicant or recipient as to whom such a finding has been made and shall be limited in its effect to the particular program, or part thereof, in which such noncompliance has been so found.

(d) *Other means authorized by law*. (1) No action to effect compliance by any other means authorized by law shall be taken until:

(i) The designated agency official has determined that compliance cannot be secured by voluntary means;

(ii) The recipient has been notified of its failure to comply and of the action to be taken to effect compliance; and

(iii) The expiration of at least 10 days from the mailing of such notice to the recipient.

(2) During this period of at least 10 days additional efforts shall be made to persuade the recipient to comply with these Title IX regulations and to take such corrective action as may be appropriate.

[65 FR 52887, Aug. 30, 2000]

§ 1211.620 Hearings.

(a) *Opportunity for hearing.* Whenever an opportunity for a hearing is required by § 1211.615(c), reasonable notice shall be given by registered or certified mail, return receipt requested, to the affected applicant or recipient. This notice shall advise the applicant or recipient of the action proposed to be taken, the specific provision under which the proposed action against it is to be taken, and the matters of fact or law asserted as the basis for this action, and either:

(1) Fix a date not less than 20 days after the date of such notice within which the applicant or recipient may request of the designated agency official that the matter be scheduled for hearing; or

(2) Advise the applicant or recipient that the matter in question has been set down for hearing at a stated place and time. The time and place so fixed shall be reasonable and shall be subject to change for cause. The complainant, if any, shall be advised of the time and place of the hearing. An applicant or recipient may waive a hearing and submit written information and argument for the record. The failure of an applicant or recipient to request a hearing for which a date has been set shall be deemed to be a waiver of the right to a hearing under 20 U.S.C. 1682 and § 1211.615(c) and consent to the making of a decision on the basis of such information as may be filed as the record.

(b) *Time and place of hearing.* Hearings shall be held at the offices of the agency in Washington, DC, at a time fixed by the designated agency official unless the official determines that the convenience of the applicant or recipient or of the agency requires that another place be selected. Hearings shall be held before a hearing officer designated in accordance with 5 U.S.C. 556(b).

(c) *Right to counsel.* In all proceedings under this section, the applicant or recipient and the agency shall have the right to be represented by counsel.

(d) *Procedures, evidence, and record.* (1) The hearing, decision, and any administrative review thereof shall be conducted in conformity with 5 U.S.C. 554–557 (sections 5 through 8 of the Administrative Procedure Act), and in accordance with such rules of procedure as are proper (and not inconsistent with this section) relating to the conduct of the hearing, giving of notices subsequent to those provided for in paragraph (a) of this section, taking of testimony, exhibits, arguments and briefs, requests for findings, and other related matters. Both the agency and the applicant or recipient shall be entitled to introduce all relevant evidence on the issues as stated in the notice for hearing or as determined by the hearing officer at the outset of or during the hearing. Any person (other than a Government employee considered to be on official business) who, having been invited or requested to appear and testify as a witness on the Government's behalf, attends at a time and place scheduled for a hearing provided for by these Title IX regulations, may be reimbursed for his or her travel and actual expenses of attendance in an amount not to exceed the amount payable under the standardized travel regulations to a Government employee traveling on official business.

(2) Technical rules of evidence shall not apply to hearings conducted pursuant to these Title IX regulations, but rules or principles designed to assure production of the most credible evidence available and to subject testimony to test by cross-examination shall be applied where reasonably necessary by the hearing officer. The hearing officer may exclude irrelevant, immaterial, or unduly repetitious evidence. All documents and other evidence offered or taken for the record shall be open to examination by the parties and opportunity shall be given to refute facts and arguments advanced on either side of the issues. A transcript shall be made of the oral evidence except to the extent the substance thereof is stipulated for the record. All decisions shall be based upon the hearing record and written findings shall be made.

(e) *Consolidated or joint hearings.* In cases in which the same or related facts are asserted to constitute noncompliance with these Title IX regulations with respect to two or more programs to which these Title IX regulations apply, or noncompliance with

these Title IX regulations and the regulations of one or more other Federal departments or agencies issued under Title IX, the designated agency official may, by agreement with such other departments or agencies where applicable, provide for the conduct of consolidated or joint hearings, and for the application to such hearings of rules of procedures not inconsistent with these Title IX regulations. Final decisions in such cases, insofar as these Title IX regulations are concerned, shall be made in accordance with § 1211.625.

[65 FR 52887, Aug. 30, 2000]

§ 1211.625 Decisions and notices.

(a) *Decisions by hearing officers.* After a hearing is held by a hearing officer such hearing officer shall either make an initial decision, if so authorized, or certify the entire record including recommended findings and proposed decision to the reviewing authority for a final decision, and a copy of such initial decision or certification shall be mailed to the applicant or recipient and to the complainant, if any. Where the initial decision referred to in this paragraph or in paragraph (c) of this section is made by the hearing officer, the applicant or recipient or the counsel for the agency may, within the period provided for in the rules of procedure issued by the designated agency official, file with the reviewing authority exceptions to the initial decision, with the reasons therefor. Upon the filing of such exceptions the reviewing authority shall review the initial decision and issue its own decision thereof including the reasons therefor. In the absence of exceptions the initial decision shall constitute the final decision, subject to the provisions of paragraph (e) of this section.

(b) *Decisions on record or review by the reviewing authority.* Whenever a record is certified to the reviewing authority for decision or it reviews the decision of a hearing officer pursuant to paragraph (a) or (c) of this section, the applicant or recipient shall be given reasonable opportunity to file with it briefs or other written statements of its contentions, and a copy of the final decision of the reviewing authority shall be given in writing to the applicant or recipient and to the complainant, if any.

(c) *Decisions on record where a hearing is waived.* Whenever a hearing is waived pursuant to § 1211.620, the reviewing authority shall make its final decision on the record or refer the matter to a hearing officer for an initial decision to be made on the record. A copy of such decision shall be given in writing to the applicant or recipient, and to the complainant, if any.

(d) *Rulings required.* Each decision of a hearing officer or reviewing authority shall set forth a ruling on each finding, conclusion, or exception presented, and shall identify the requirement or requirements imposed by or pursuant to these Title IX regulations with which it is found that the applicant or recipient has failed to comply.

(e) *Review in certain cases by the Archivist of the United States.* If the Archivist has not personally made the final decision referred to in paragraph (a), (b), or (c) of this section, a recipient or applicant or the counsel for the agency may request the Archivist to review a decision of the reviewing authority in accordance with rules of procedure issued by the designated agency official. Such review is not a matter of right and shall be granted only where the Archivist determines there are special and important reasons therefor. The Archivist may grant or deny such request, in whole or in part. The Archivist may also review such a decision upon his own motion in accordance with rules of procedure issued by the National Archives and Records Administration. In the absence of a review under this paragraph (e), a final decision referred to in paragraph (a), (b), or (c) of this section shall become the final decision of the agency when the Archivist transmits it as such to Congressional committees with the report required under 20 U.S.C. 1682. Failure of an applicant or recipient to file an exception with the reviewing authority or to request review under this paragraph (e) shall not be deemed a failure to exhaust administrative remedies for the purpose of obtaining judicial review.

(f) *Content of orders.* The final decision may provide for suspension or termination of, or refusal to grant or continue Federal financial assistance, in whole or in part, to which these Title IX regulations apply, and may contain such terms, conditions, and other provisions as are consistent with and will effectuate the purposes of Title IX and these Title IX regulations, including provisions designed to assure that no Federal financial assistance to which these Title IX regulations apply will thereafter be extended under such law or laws to the applicant or recipient determined by such decision to be in default in its performance of an assurance given by it pursuant to these Title IX regulations, or to have otherwise failed to comply with these Title IX regulations unless and until it corrects its noncompliance and satisfies the designated agency official that it will fully comply with these Title IX regulations.

(g) *Post-termination proceedings.* (1) An applicant or recipient adversely affected by an order issued under paragraph (f) of this section shall be restored to full eligibility to receive Federal financial assistance if it satisfies the terms and conditions of that order for such eligibility or if it brings itself into compliance with these Title IX regulations and provides reasonable assurance that it will fully comply with these Title IX regulations. An elementary or secondary school or school system that is unable to file an assurance of compliance shall be restored to full eligibility to receive Federal financial assistance if it files a court order or a plan for desegregation that meets the applicable requirements and provides reasonable assurance that it will comply with the court order or plan.

(2) Any applicant or recipient adversely affected by an order entered pursuant to paragraph (f) of this section may at any time request the designated agency official to restore fully its eligibility to receive Federal financial assistance. Any such request shall be supported by information showing that the applicant or recipient has met the requirements of paragraph (g)(1) of this section. If the designated agency official determines that those requirements have been satisfied, the official shall restore such eligibility.

(3) If the designated agency official denies any such request, the applicant or recipient may submit a request for a hearing in writing, specifying why it believes such official to have been in error. It shall thereupon be given an expeditious hearing, with a decision on the record, in accordance with rules of procedure issued by the designated agency official. The applicant or recipient will be restored to such eligibility if it proves at such hearing that it satisfied the requirements of paragraph (g)(1) of this section. While proceedings under this paragraph (g) are pending, the sanctions imposed by the order issued under paragraph (f) of this section shall remain in effect.

[65 FR 52888, Aug. 30, 2000]

§ 1211.630 Judicial review.

Action taken pursuant to 20 U.S.C. 1682 is subject to judicial review as provided in 20 U.S.C. 1683.

[65 FR 52889, Aug. 30, 2000]

§ 1211.635 Forms and instructions; coordination.

(a) *Forms and instructions.* The designated agency official shall issue and promptly make available to interested persons forms and detailed instructions and procedures for implementing these Title IX regulations.

(b) *Supervision and coordination.* The Archivist or his designee may from time to time assign to officials of the agency, or to officials of other departments or agencies of the Government with the consent of such departments or agencies, responsibilities in connection with the effectuation of the purposes of Title IX and these Title IX regulations (other than responsibility for review as provided in § 1211.625(e)), including the achievements of effective coordination and maximum uniformity within the agency and within the Executive Branch of the Government in the application of Title IX and these Title IX regulations to similar programs and in similar situations. Any action taken, determination made, or requirement imposed by an official of another department or agency acting pursuant to an assignment of responsibility

under this section shall have the same effect as though such action had been taken by the designated official of this agency.

[65 FR 52889, Aug. 30, 2000]

PART 1212—GOVERNMENTWIDE REQUIREMENTS FOR DRUG-FREE WORKPLACE (FINANCIAL ASSISTANCE)

Subpart A—Purpose and Coverage

Sec.
1212.100 What does this part do?
1212.105 Does this part apply to me?
1212.110 Are any of my Federal assistance awards exempt from this part?
1212.115 Does this part affect the Federal contracts that I receive?

Subpart B—Requirements for Recipients Other Than Individuals

1212.200 What must I do to comply with this part?
1212.205 What must I include in my drug-free workplace statement?
1212.210 To whom must I distribute my drug-free workplace statement?
1212.215 What must I include in my drug-free awareness program?
1212.220 By when must I publish my drug-free workplace statement and establish my drug-free awareness program?
1212.225 What actions must I take concerning employees who are convicted of drug violations in the workplace?
1212.230 How and when must I identify workplaces?

Subpart C—Requirements for Recipients Who Are Individuals

1212.300 What must I do to comply with this part if I am an individual recipient?
1212.301 [Reserved]

Subpart D—Responsibilities of NARA Awarding Officials

1212.400 What are my responsibilities as a NARA awarding official?

Subpart E—Violations of This Part and Consequences

1212.500 How are violations of this part determined for recipients other than individuals?
1212.505 How are violations of this part determined for recipients who are individuals?
1212.510 What actions will the Federal Government take against a recipient determined to have violated this part?
1212.515 Are there any exceptions to those actions?

Subpart F—Definitions

1212.605 Award.
1212.610 Controlled substance.
1212.615 Conviction.
1212.620 Cooperative agreement.
1212.625 Criminal drug statute
1212.630 Debarment.
1212.635 Drug-free workplace.
1212.640 Employee.
1212.645 Federal agency or agency.
1212.650 Grant.
1212.655 Individual.
1212.660 Recipient.
1212.665 State.
1212.670 Suspension.

AUTHORITY: 41 U.S.C. 701, *et seq.;* 44 U.S.C. 2104(a).

SOURCE: 68 FR 66544, 66617, Nov. 26, 2003, unless otherwise noted.

Subpart A—Purpose and Coverage

§ 1212.100 What does this part do?

This part carries out the portion of the Drug-Free Workplace Act of 1988 (41 U.S.C. 701 *et seq.*, as amended) that applies to grants. It also applies the provisions of the Act to cooperative agreements and other financial assistance awards, as a matter of Federal Government policy.

§ 1212.105 Does this part apply to me?

(a) Portions of this part apply to you if you are either—

(1) A recipient of an assistance award from the NARA; or

(2) A(n) NARA awarding official. (See definitions of award and recipient in §§ 1212.605 and 1212.660, respectively.)

(b) The following table shows the subparts that apply to you:

If you are . . .	see subparts . . .
(1) A recipient who is not an individual	A, B and E.
(2) A recipient who is an individual	A, C and E.
(3) A(n) NARA awarding official	A, D and E.

§ 1212.110 Are any of my Federal assistance awards exempt from this part?

This part does not apply to any award that the Archivist of the United

States or designee determines that the application of this part would be inconsistent with the international obligations of the United States or the laws or regulations of a foreign government.

§ 1212.115 Does this part affect the Federal contracts that I receive?

It will affect future contract awards indirectly if you are debarred or suspended for a violation of the requirements of this part, as described in § 1212.510(c). However, this part does not apply directly to procurement contracts. The portion of the Drug-Free Workplace Act of 1988 that applies to Federal procurement contracts is carried out through the Federal Acquisition Regulation in chapter 1 of Title 48 of the Code of Federal Regulations (the drug-free workplace coverage currently is in 48 CFR part 23, subpart 23.5).

Subpart B—Requirements for Recipients Other Than Individuals

§ 1212.200 What must I do to comply with this part?

There are two general requirements if you are a recipient other than an individual.

(a) First, you must make a good faith effort, on a continuing basis, to maintain a drug-free workplace. You must agree to do so as a condition for receiving any award covered by this part. The specific measures that you must take in this regard are described in more detail in subsequent sections of this subpart. Briefly, those measures are to—

(1) Publish a drug-free workplace statement and establish a drug-free awareness program for your employees (see §§ 1212.205 through 1212.220); and

(2) Take actions concerning employees who are convicted of violating drug statutes in the workplace (see § 1212.225).

(b) Second, you must identify all known workplaces under your Federal awards (see § 1212.230).

§ 1212.205 What must I include in my drug-free workplace statement?

You must publish a statement that—

(a) Tells your employees that the unlawful manufacture, distribution, dispensing, possession, or use of a controlled substance is prohibited in your workplace;

(b) Specifies the actions that you will take against employees for violating that prohibition; and

(c) Lets each employee know that, as a condition of employment under any award, he or she:

(1) Will abide by the terms of the statement; and

(2) Must notify you in writing if he or she is convicted for a violation of a criminal drug statute occurring in the workplace and must do so no more than five calendar days after the conviction.

§ 1212.210 To whom must I distribute my drug-free workplace statement?

You must require that a copy of the statement described in § 1212.205 be given to each employee who will be engaged in the performance of any Federal award.

§ 1212.215 What must I include in my drug-free awareness program?

You must establish an ongoing drug-free awareness program to inform employees about—

(a) The dangers of drug abuse in the workplace;

(b) Your policy of maintaining a drug-free workplace;

(c) Any available drug counseling, rehabilitation, and employee assistance programs; and

(d) The penalties that you may impose upon them for drug abuse violations occurring in the workplace.

§ 1212.220 By when must I publish my drug-free workplace statement and establish my drug-free awareness program?

If you are a new recipient that does not already have a policy statement as described in § 1212.205 and an ongoing awareness program as described in § 1212.215, you must publish the statement and establish the program by the time given in the following table:

If . . .	then you . . .
(a) The performance period of the award is less than 30 days.	must have the policy statement and program in place as soon as possible, but before the date on which performance is expected to be completed.

If . . .	then you . . .
(b) The performance period of the award is 30 days or more.	must have the policy statement and program in place within 30 days after award.
(c) You believe there are extraordinary circumstances that will require more than 30 days for you to publish the policy statement and establish the awareness program.	may ask the NARA awarding official to give you more time to do so. The amount of additional time, if any, to be given is at the discretion of the awarding official.

§ 1212.225 What actions must I take concerning employees who are convicted of drug violations in the workplace?

There are two actions you must take if an employee is convicted of a drug violation in the workplace:

(a) First, you must notify Federal agencies if an employee who is engaged in the performance of an award informs you about a conviction, as required by § 1212.205(c)(2), or you otherwise learn of the conviction. Your notification to the Federal agencies must__

(1) Be in writing;

(2) Include the employee's position title;

(3) Include the identification number(s) of each affected award;

(4) Be sent within ten calendar days after you learn of the conviction; and

(5) Be sent to every Federal agency on whose award the convicted employee was working. It must be sent to every awarding official or his or her official designee, unless the Federal agency has specified a central point for the receipt of the notices.

(b) Second, within 30 calendar days of learning about an employee's conviction, you must either__

(1) Take appropriate personnel action against the employee, up to and including termination, consistent with the requirements of the Rehabilitation Act of 1973 (29 U.S.C. 794), as amended; or

(2) Require the employee to participate satisfactorily in a drug abuse assistance or rehabilitation program approved for these purposes by a Federal, State or local health, law enforcement, or other appropriate agency.

§ 1212.230 How and when must I identify workplaces?

(a) You must identify all known workplaces under each NARA award. A failure to do so is a violation of your drug-free workplace requirements. You may identify the workplaces__

(1) To the NARA official that is making the award, either at the time of application or upon award; or

(2) In documents that you keep on file in your offices during the performance of the award, in which case you must make the information available for inspection upon request by NARA officials or their designated representatives.

(b) Your workplace identification for an award must include the actual address of buildings (or parts of buildings) or other sites where work under the award takes place. Categorical descriptions may be used (e.g., all vehicles of a mass transit authority or State highway department while in operation, State employees in each local unemployment office, performers in concert halls or radio studios).

(c) If you identified workplaces to the NARA awarding official at the time of application or award, as described in paragraph (a)(1) of this section, and any workplace that you identified changes during the performance of the award, you must inform the NARA awarding official.

Subpart C—Requirements for Recipients Who Are Individuals

§ 1212.300 What must I do to comply with this part if I am an individual recipient?

As a condition of receiving a(n) NARA award, if you are an individual recipient, you must agree that—

(a) You will not engage in the unlawful manufacture, distribution, dispensing, possession, or use of a controlled substance in conducting any activity related to the award; and

(b) If you are convicted of a criminal drug offense resulting from a violation occurring during the conduct of any award activity, you will report the conviction:

(1) In writing.

(2) Within 10 calendar days of the conviction.

(3) To the NARA awarding official or other designee for each award that you currently have, unless § 1212.301 or the award document designates a central point for the receipt of the notices.

When notice is made to a central point, it must include the identification number(s) of each affected award.

§ 1212.301 [Reserved]

Subpart D—Responsibilities of NARA Awarding Officials

§ 1212.400 What are my responsibilities as a(n) NARA awarding official?

As a(n) NARA awarding official, you must obtain each recipient's agreement, as a condition of the award, to comply with the requirements in—

(a) Subpart B of this part, if the recipient is not an individual; or

(b) Subpart C of this part, if the recipient is an individual.

Subpart E—Violations of this Part and Consequences

§ 1212.500 How are violations of this part determined for recipients other than individuals?

A recipient other than an individual is in violation of the requirements of this part if the Archivist of the United States or designee determines, in writing, that—

(a) The recipient has violated the requirements of subpart B of this part; or

(b) The number of convictions of the recipient's employees for violating criminal drug statutes in the workplace is large enough to indicate that the recipient has failed to make a good faith effort to provide a drug-free workplace.

§ 1212.505 How are violations of this part determined for recipients who are individuals?

An individual recipient is in violation of the requirements of this part if the Archivist of the United States or designee determines, in writing, that—

(a) The recipient has violated the requirements of subpart C of this part; or

(b) The recipient is convicted of a criminal drug offense resulting from a violation occurring during the conduct of any award activity.

§ 1212.510 What actions will the Federal Government take against a recipient determined to have violated this part?

If a recipient is determined to have violated this part, as described in § 1212.500 or § 1212.505, the NARA may take one or more of the following actions—

(a) Suspension of payments under the award;

(b) Suspension or termination of the award; and

(c) Suspension or debarment of the recipient under 36 CFR part 1209, for a period not to exceed five years.

[68 FR 66544, 66617, Nov. 26, 2003, as amended at 68 FR 66617, Nov. 26, 2003]

§ 1212.515 Are there any exceptions to those actions?

The Archivist of the United States or designee may waive with respect to a particular award, in writing, a suspension of payments under an award, suspension or termination of an award, or suspension or debarment of a recipient if the Archivist of the United States or designee determines that such a waiver would be in the public interest. This exception authority cannot be delegated to any other official.

Subpart F—Definitions

§ 1212.605 Award.

Award means an award of financial assistance by the NARA or other Federal agency directly to a recipient.

(a) The term award includes:

(1) A Federal grant or cooperative agreement, in the form of money or property in lieu of money.

(2) A block grant or a grant in an entitlement program, whether or not the grant is exempted from coverage under the Governmentwide rule 36 CFR part 1207 that implements OMB Circular A–102 (for availability, see 5 CFR 1310.3) and specifies uniform administrative requirements.

(b) The term award does not include:

(1) Technical assistance that provides services instead of money.

(2) Loans.

(3) Loan guarantees.

(4) Interest subsidies.

(5) Insurance.

(6) Direct appropriations.

(7) Veterans' benefits to individuals (*i.e.*, any benefit to veterans, their families, or survivors by virtue of the service of a veteran in the Armed Forces of the United States).

[68 FR 66544, 66617, Nov. 26, 2003, as amended at 68 FR 66617, Nov. 26, 2003]

§ 1212.610 Controlled substance.

Controlled substance means a controlled substance in schedules I through V of the Controlled Substances Act (21 U.S.C. 812), and as further defined by regulation at 21 CFR 1308.11 through 1308.15.

§ 1212.615 Conviction.

Conviction means a finding of guilt (including a plea of nolo contendere) or imposition of sentence, or both, by any judicial body charged with the responsibility to determine violations of the Federal or State criminal drug statutes.

§ 1212.620 Cooperative agreement.

Cooperative agreement means an award of financial assistance that, consistent with 31 U.S.C. 6305, is used to enter into the same kind of relationship as a grant (see definition of grant in § 1212.650), except that substantial involvement is expected between the Federal agency and the recipient when carrying out the activity contemplated by the award. The term does not include cooperative research and development agreements as defined in 15 U.S.C. 3710a.

§ 1212.625 Criminal drug statute.

Criminal drug statute means a Federal or non-Federal criminal statute involving the manufacture, distribution, dispensing, use, or possession of any controlled substance.

§ 1212.630 Debarment.

Debarment means an action taken by a Federal agency to prohibit a recipient from participating in Federal Government procurement contracts and covered nonprocurement transactions. A recipient so prohibited is debarred, in accordance with the Federal Acquisition Regulation for procurement contracts (48 CFR part 9, subpart 9.4) and the common rule, Government-wide Debarment and Suspension (Nonprocurement), that implements Executive Order 12549 and Executive Order 12689.

§ 1212.635 Drug-free workplace.

Drug-free workplace means a site for the performance of work done in connection with a specific award at which employees of the recipient are prohibited from engaging in the unlawful manufacture, distribution, dispensing, possession, or use of a controlled substance.

§ 1212.640 Employee.

(a) *Employee* means the employee of a recipient directly engaged in the performance of work under the award, including—

(1) All direct charge employees;

(2) All indirect charge employees, unless their impact or involvement in the performance of work under the award is insignificant to the performance of the award; and

(3) Temporary personnel and consultants who are directly engaged in the performance of work under the award and who are on the recipient's payroll.

(b) This definition does not include workers not on the payroll of the recipient (e.g., volunteers, even if used to meet a matching requirement; consultants or independent contractors not on the payroll; or employees of subrecipients or subcontractors in covered workplaces).

§ 1212.645 Federal agency or agency.

Federal agency or agency means any United States executive department, military department, government corporation, government controlled corporation, any other establishment in the executive branch (including the Executive Office of the President), or any independent regulatory agency.

§ 1212.650 Grant.

Grant means an award of financial assistance that, consistent with 31 U.S.C. 6304, is used to enter into a relationship—

(a) The principal purpose of which is to transfer a thing of value to the recipient to carry out a public purpose of support or stimulation authorized by a law of the United States, rather than

to acquire property or services for the Federal Government's direct benefit or use; and

(b) In which substantial involvement is not expected between the Federal agency and the recipient when carrying out the activity contemplated by the award.

§ 1212.655 Individual.

Individual means a natural person.

§ 1212.660 Recipient.

Recipient means any individual, corporation, partnership, association, unit of government (except a Federal agency) or legal entity, however organized, that receives an award directly from a Federal agency.

§ 1212.665 State.

State means any of the States of the United States, the District of Columbia, the Commonwealth of Puerto Rico, or any territory or possession of the United States.

§ 1212.670 Suspension.

Suspension means an action taken by a Federal agency that immediately prohibits a recipient from participating in Federal Government procurement contracts and covered nonprocurement transactions for a temporary period, pending completion of an investigation and any judicial or administrative proceedings that may ensue. A recipient so prohibited is suspended, in accordance with the Federal Acquisition Regulation for procurement contracts (48 CFR part 9, subpart 9.4) and the common rule, Government-wide Debarment and Suspension (Nonprocurement), that implements Executive Order 12549 and Executive Order 12689. Suspension of a recipient is a distinct and separate action from suspension of an award or suspension of payments under an award.

SUBCHAPTER B—RECORDS MANAGEMENT

PART 1220—FEDERAL RECORDS; GENERAL

Subpart A—General Provisions of Subchapter B

Sec.
1220.1 What is the scope of Subchapter B?
1220.2 What are the authorities for Subchapter B?
1220.3 What standards are used as guidelines for Subchapter B?
1220.10 Who is responsible for records management?
1220.12 What are NARA's records management responsibilities?
1220.14 Who must follow the regulations in Subchapter B?
1220.16 What recorded information must be managed in accordance with the regulations in Subchapter B?
1220.18 What definitions apply to the regulations in Subchapter B?
1220.20 What NARA acronyms are used throughout Subchapter B?

Subpart B—Agency Records Management Program Responsibilities

1220.30 What are an agency's records management responsibilities?
1220.32 What records management principles must agencies implement?
1220.34 What must an agency do to carry out its records management responsibilities?

AUTHORITY: 44 U.S.C. Chapters 21, 29, 31, and 33.

SOURCE: 74 FR 51014, Oct. 2, 2009, unless otherwise noted.

§ 1220.1 What is the scope of Subchapter B?

Subchapter B specifies policies for Federal agencies' records management programs relating to proper records creation and maintenance, adequate documentation, and records disposition.

§ 1220.2 What are the authorities for Subchapter B?

The regulations in this subchapter implement the provisions of 44 U.S.C. Chapters 21, 29, 31, and 33.

§ 1220.3 What standards are used as guidelines for Subchapter B?

These regulations are in conformance with ISO 15489–1:2001, Information and documentation—Records management. Other standards relating to specific sections of the regulations are cited where appropriate.

§ 1220.10 Who is responsible for records management?

(a) The National Archives and Records Administration (NARA) is responsible for overseeing agencies' adequacy of documentation and records disposition programs and practices, and the General Services Administration (GSA) is responsible for overseeing economy and efficiency in records management. The Archivist of the United States and the Administrator of GSA issue regulations and provide guidance and assistance to Federal agencies on records management programs. NARA regulations are in this subchapter. GSA regulations are in 41 CFR parts 102–193.

(b) Federal agencies are responsible for establishing and maintaining a records management program that complies with NARA and GSA regulations and guidance. Subpart B of this part sets forth basic agency records management requirements.

§ 1220.12 What are NARA's records management responsibilities?

(a) The Archivist of the United States issues regulations and provides guidance and assistance to Federal agencies on ensuring adequate and proper documentation of the organization, functions, policies, decisions, procedures, and essential transactions of the Federal Government and ensuring proper records disposition, including standards for improving the management of records.

(b) NARA establishes standards for the retention of records having continuing value (permanent records), and assists Federal agencies in applying the standards to records in their custody.

(c) Through a records scheduling and appraisal process, the Archivist of the

United States determines which Federal records have temporary value and may be destroyed and which Federal records have permanent value and must be preserved and transferred to the National Archives of the United States. The Archivist's determination constitutes mandatory authority for the final disposition of all Federal records.

(d) The Archivist of the United States issues General Records Schedules (GRS) authorizing disposition, after specified periods of time, of records common to several or all Federal agencies.

§ 1220.14 Who must follow the regulations in Subchapter B?

The regulations in Subchapter B apply to Federal agencies as defined in § 1220.18.

§ 1220.16 What recorded information must be managed in accordance with the regulations in Subchapter B?

The requirements in Subchapter B apply to documentary materials that meet the definition of Federal records. See also Part 1222 of this subchapter.

§ 1220.18 What definitions apply to the regulations in Subchapter B?

As used in subchapter B—

Adequate and proper documentation means a record of the conduct of Government business that is complete and accurate to the extent required to document the organization, functions, policies, decisions, procedures, and essential transactions of the agency and that is designed to furnish the information necessary to protect the legal and financial rights of the Government and of persons directly affected by the agency's activities.

Agency (see Executive agency and Federal agency).

Appraisal is the process by which the NARA determines the value and the final disposition of Federal records, designating them either temporary or permanent.

Commercial records storage facility is a private sector commercial facility that offers records storage, retrieval, and disposition services.

Comprehensive schedule is an agency manual or directive containing descriptions of and disposition instructions for documentary materials in all physical forms, record and nonrecord, created by a Federal agency or major component of an Executive department. Unless taken from General Records Schedules (GRS) issued by NARA, the disposition instructions for records must be approved by NARA on one or more Standard Form(s) 115, Request for Records Disposition Authority, prior to issuance by the agency. The disposition instructions for nonrecord materials are established by the agency and do not require NARA approval. See also *records schedule.*

Contingent records are records whose final disposition is dependent on an action or event, such as sale of property or destruction of a facility, which will take place at some unspecified time in the future.

Disposition means those actions taken regarding records no longer needed for the conduct of the regular current business of the agency.

Disposition authority means the legal authorization for the retention and disposal of records. For Federal records it is found on SF 115s, Request for Records Disposition Authority, which have been approved by the Archivist of the United States. For nonrecord materials, the disposition is established by the creating or custodial agency. See also *records schedule.*

Documentary materials is a collective term that refers to recorded information, regardless of the medium or the method or circumstances of recording.

Electronic record means any information that is recorded in a form that only a computer can process and that satisfies the definition of a Federal record under the Federal Records Act. The term includes both record content and associated metadata that the agency determines is required to meet agency business needs.

Evaluation means the selective or comprehensive inspection, audit, or review of one or more Federal agency records management programs for effectiveness and for compliance with applicable laws and regulations. It includes recommendations for correcting

or improving records management policies and procedures, and follow-up activities, including reporting on and implementing the recommendations.

Executive agency means any executive department or independent establishment in the Executive branch of the U.S. Government, including any wholly owned Government corporation.

Federal agency means any executive agency or any establishment in the Legislative or Judicial branches of the Government (except the Supreme Court, Senate, the House of Representatives, and the Architect of the Capitol and any activities under his direction). (44 U.S.C. 2901(14)).

Federal records (see records).

File means an arrangement of records. The term denotes papers, photographs, maps, electronic information, or other recorded information regardless of physical form or characteristics, accumulated or maintained in filing equipment, boxes, on electronic media, or on shelves, and occupying office or storage space.

Information system means the organized collection, processing, transmission, and dissemination of information in accordance with defined procedures, whether automated or manual.

Metadata consists of preserved contextual information describing the history, tracking, and/or management of an electronic document.

National Archives of the United States is the collection of all records selected by the Archivist of the United States because they have sufficient historical or other value to warrant their continued preservation by the Federal Government and that have been transferred to the legal custody of the Archivist of the United States, currently through execution of a Standard Form (SF) 258 (Agreement to Transfer Records to the National Archives of the United States). See also *permanent record*.

Nonrecord materials are those Federally owned informational materials that do not meet the statutory definition of records (44 U.S.C. 3301) or that have been excluded from coverage by the definition. Excluded materials are extra copies of documents kept only for reference, stocks of publications and processed documents, and library or museum materials intended solely for reference or exhibit.

Permanent record means any Federal record that has been determined by NARA to have sufficient value to warrant its preservation in the National Archives of the United States, even while it remains in agency custody. Permanent records are those for which the disposition is permanent on SF 115, Request for Records Disposition Authority, approved by NARA on or after May 14, 1973. The term also includes all records accessioned by NARA into the National Archives of the United States.

Personal files (also called *personal papers*) are documentary materials belonging to an individual that are not used to conduct agency business. Personal files are excluded from the definition of Federal records and are not owned by the Government.

Recordkeeping requirements means all statements in statutes, regulations, and agency directives or other authoritative issuances, that provide general or specific requirements for Federal agency personnel on particular records to be created and maintained by the agency.

Recordkeeping system is a manual or electronic system that captures, organizes, and categorizes records to facilitate their preservation, retrieval, use, and disposition.

Records or *Federal records* is defined in 44 U.S.C. 3301 as including ''all books, papers, maps, photographs, machine readable materials, or other documentary materials, regardless of physical form or characteristics, made or received by an agency of the United States Government under Federal law or in connection with the transaction of public business and preserved or appropriate for preservation by that agency or its legitimate successor as evidence of the organization, functions, policies, decisions, procedures, operations or other activities of the Government or because of the informational value of the data in them (44 U.S.C. 3301).'' (See also §1222.10 of this part for an explanation of this definition).

Records center is defined in 44 U.S.C. 2901(6) as an establishment maintained and operated by the Archivist (NARA Federal Records Center) or by another

Federal agency primarily for the storage, servicing, security, and processing of records which need to be preserved for varying periods of time and need not be retained in office equipment or space. See also *records storage facility*.

Records management, as used in subchapter B, means the planning, controlling, directing, organizing, training, promoting, and other managerial activities involved with respect to records creation, records maintenance and use, and records disposition in order to achieve adequate and proper documentation of the policies and transactions of the Federal Government and effective and economical management of agency operations.

Records schedule or schedule means any of the following:

(1) A Standard Form 115, Request for Records Disposition Authority that has been approved by NARA to authorize the disposition of Federal records;

(2) A General Records Schedule (GRS) issued by NARA; or

(3) A published agency manual or directive containing the records descriptions and disposition instructions approved by NARA on one or more SF 115s or issued by NARA in the GRS. See also *comprehensive schedule*.

Records storage facility is a records center or a commercial records storage facility, as defined in this section, i.e., a facility used by a Federal agency to store Federal records, whether that facility is operated and maintained by the agency, by NARA, by another Federal agency, or by a private commercial entity.

Retention period is the length of time that records must be kept.

Series means file units or documents arranged according to a filing or classification system or kept together because they relate to a particular subject or function, result from the same activity, document a specific kind of transaction, take a particular physical form, or have some other relationship arising out of their creation, receipt, or use, such as restrictions on access and use. Also called a *records series*.

Temporary record means any Federal record that has been determined by the Archivist of the United States to have insufficient value (on the basis of current standards) to warrant its preservation by the National Archives and Records Administration. This determination may take the form of:

(1) Records designated as disposable in an agency records disposition schedule approved by NARA (SF 115, Request for Records Disposition Authority); or

(2) Records designated as disposable in a General Records Schedule.

Unscheduled records are Federal records whose final disposition has not been approved by NARA on a SF 115, Request for Records Disposition Authority. Such records must be treated as permanent until a final disposition is approved.

§ 1220.20 What NARA acronyms are used throughout Subchapter B?

As used in Subchapter B—

NARA means the National Archives and Records Administration.

NAS means the Space and Security Management Division.

NR means the Office of Regional Record Services.

NWCS means the Special Media Archives Services Division.

NWM means Modern Records Programs, which includes NARA records management staff nationwide.

NWME means the Electronic and Special Media Records Services Division.

NWML means the Lifecycle Management Division.

NWMW means the Washington National Records Center.

NWT means Preservation Programs.

Subpart B—Agency Records Management Responsibilities

§ 1220.30 What are an agency's records management responsibilities?

(a) Under 44 U.S.C. 3101, the head of each Federal agency must make and preserve records containing adequate and proper documentation of the organization, functions, policies, decisions, procedures, and essential transactions of the agency. These records must be designed to furnish the information necessary to protect the legal and financial rights of the Government and of persons directly affected by the agency's activities.

(b) Under 44 U.S.C. 3102, the head of each Federal agency must establish

and maintain an active, continuing program for the economical and efficient management of the records of the agency.

(c) Agency records management programs must provide for:

(1) Effective controls over the creation, maintenance, and use of records in the conduct of current business; and

(2) Cooperation with the Archivist and the Administrator of GSA in applying standards, procedures, and techniques designed to improve the management of records, promote the maintenance and security of records deemed appropriate for preservation, and facilitate the segregation and destruction of records of temporary value.

§ 1220.32 What records management principles must agencies implement?

Agencies must create and maintain authentic, reliable, and usable records and ensure that they remain so for the length of their authorized retention period. A comprehensive records management program provides policies and procedures for ensuring that:

(a) Records documenting agency business are created or captured;

(b) Records are organized and maintained to facilitate their use and ensure integrity throughout their authorized retention periods;

(c) Records are available when needed, where needed, and in a usable format to conduct agency business;

(d) Legal and regulatory requirements, relevant standards, and agency policies are followed;

(e) Records, regardless of format, are protected in a safe and secure environment and removal or destruction is carried out only as authorized in records schedules; and

(f) Continuity of operations is supported by a vital records program (see part 1223 of this subchapter).

§ 1220.34 What must an agency do to carry out its records management responsibilities?

To carry out the responsibilities specified in 44 U.S.C. 3101 and 3102, agencies must:

(a) Assign records management responsibility to a person and office with appropriate authority within the agency to coordinate and oversee implementation of the agency comprehensive records management program principles in § 1220.32;

(b) Advise NARA and agency managers of the name(s) of the individual(s) assigned operational responsibility for the agency records management program. To notify NARA, send the name(s), e-mail and postal addresses, phone and fax numbers of the individual(s) to NARA (NWM), 8601 Adelphi Road, College Park, MD 20740–6001 or to *RM.Communications@nara.gov*. The name, title, and phone number of the official or officials authorized by the head of the agency to sign records disposition schedules and requests for transfer of records to the custody of the National Archives must also be submitted to NARA (NWM) or *RM.Communications@nara.gov;*

(c) Issue a directive(s) establishing program objectives, responsibilities, and authorities for the creation, maintenance, and disposition of agency records. Copies of the directive(s) (including subsequent amendments or supplements) must be disseminated throughout the agency, as appropriate, and a copy must be sent to NARA (NWM);

(d) Assign records management responsibilities in each program (mission) and administrative area to ensure incorporation of recordkeeping requirements and records maintenance, storage, and disposition practices into agency programs, processes, systems, and procedures;

(e) Integrate records management and archival requirements into the design, development, and implementation of electronic information systems as specified in § 1236.12 of this subchapter;

(f) Provide guidance and training to all agency personnel on their records management responsibilities, including identification of Federal records, in all formats and media;

(g) Develop records schedules for all records created and received by the agency and obtain NARA approval of the schedules prior to implementation, in accordance with 36 CFR parts 1225 and 1226 of this subchapter;

(h) Comply with applicable policies, procedures, and standards relating to

records management and recordkeeping requirements issued by the Office of Management and Budget, NARA, GSA, or other agencies, as appropriate (see §1222.22 of this subchapter);

(i) Institute controls ensuring that all records, regardless of format or medium, are properly organized, classified or indexed, and described, and made available for use by all appropriate agency staff; and

(j) Conduct formal evaluations to measure the effectiveness of records management programs and practices, and to ensure that they comply with NARA regulations in this subchapter.

PART 1222—CREATION AND MAINTENANCE OF FEDERAL RECORDS

Subpart A—Identifying Federal Records

Sec.
1222.1 What are the authorities for Part 1222?
1222.2 What definitions apply to this part?
1222.3 What standards are used as guidance for this part?
1222.10 How should agencies apply the statutory definition of Federal records?
1222.12 What types of documentary materials are Federal records?
1222.14 What are nonrecord materials?
1222.16 How are nonrecord materials managed?
1222.18 Under what conditions may nonrecord materials be removed from government agencies?
1222.20 How are personal files defined and managed?

Subpart B—Agency Recordkeeping Requirements

1222.22 What records are required to provide for adequate documentation of agency business?
1222.24 How do agencies establish recordkeeping requirements?
1222.26 What are the general recordkeeping requirements for agency programs?
1222.28 What are the series level recordkeeping requirements?
1222.30 When must agencies comply with the recordkeeping requirements of other agencies?
1222.32 How do agencies manage data and records created or received by contractors?
1222.34 How must agencies maintain records?

AUTHORITY: 44 U.S.C. 2904, 3101, 3102, and 3301.

SOURCE: 74 FR 51014, Oct. 2, 2009, unless otherwise noted.

Subpart A—Identifying Federal Records

§1222.1 What are the authorities for Part 1222?

The statutory authorities for this part are 44 U.S.C. 2904, 3101, 3102, and 3301.

§1222.2 What definitions apply to this part?

See §1220.18 of this subchapter for definitions of terms used in part 1222.

§1222.3 What standards are used as guidance for this part?

These regulations conform with guidance provided in ISO 15489–1:2001, Information and documentation—Records management. Paragraphs 7.1 (Principles of records management programmes), 7.2 (Characteristics of a record), 8.3.5 (Conversion and migration), 8.3.6 (Access, retrieval and use), and 9.6 (Storage and handling) apply to records creation and maintenance.

§1222.10 How should agencies apply the statutory definition of Federal records?

(a) The statutory definition of Federal records is contained in 44 U.S.C. 3301 and provided in §1220.18 of this subchapter.

(b) Several key terms, phrases, and concepts in the statutory definition of a Federal record are further explained as follows:

(1) *Documentary materials* has the meaning provided in §1220.18 of this subchapter.

(2) *Regardless of physical form or characteristics* means that the medium may be paper, film, disk, or other physical type or form; and that the method of recording may be manual, mechanical, photographic, electronic, or any other combination of these or other technologies.

(3) *Made* means the act of creating and recording information by agency personnel in the course of their official duties, regardless of the method(s) or the medium involved.

(4) *Received* means the acceptance or collection of documentary materials by

or on behalf of an agency or agency personnel in the course of their official duties regardless of their origin (for example, other units of their agency, private citizens, public officials, other agencies, contractors, Government grantees) and regardless of how transmitted (in person or by messenger, mail, electronic means, or by any other method). In this context, the term does not refer to misdirected materials. It may or may not refer to loaned or seized materials depending on the conditions under which such materials came into agency custody or were used by the agency. Advice of legal counsel should be sought regarding the ''record'' status of loaned or seized materials.

(5) *Preserved* means the filing, storing, or any other method of systematically maintaining documentary materials in any medium by the agency. This term covers materials not only actually filed or otherwise systematically maintained but also those temporarily removed from existing filing systems.

(6) *Appropriate for preservation* means documentary materials made or received which, in the judgment of the agency, should be filed, stored, or otherwise systematically maintained by an agency because of the evidence of agency activities or information they contain, even if the materials are not covered by its current filing or maintenance procedures.

§ 1222.12 What types of documentary materials are Federal records?

(a) *General*. To ensure that complete and accurate records are made and retained in the Federal Government, agencies must distinguish between records and nonrecord materials by applying the definition of records (see 44 U.S.C. 3301 and 36 CFR 1220.18 and 1222.10 of this subchapter) to agency documentary materials in all formats and media.

(b) *Record status*. Documentary materials are records when they meet the conditions specified in § 1222.10(b).

(c) *Working files and similar materials*. Working files, such as preliminary drafts and rough notes, and other similar materials, are records that must be maintained to ensure adequate and proper documentation if:

(1) They were circulated or made available to employees, other than the creator, for official purposes such as approval, comment, action, recommendation, follow-up, or to communicate with agency staff about agency business; and

(2) They contain unique information, such as substantive annotations or comments that adds to a proper understanding of the agency's formulation and execution of basic policies, decisions, actions, or responsibilities.

(d) *Record status of copies*. The determination as to whether a particular document is a record does not depend upon whether it contains unique information. Multiple copies of the same document and documents containing duplicative information may each have record status depending on how they are used in conducting agency business.

§ 1222.14 What are nonrecord materials?

Nonrecord materials are U.S. Government-owned documentary materials that do not meet the conditions of records status (see § 1222.12(b)) or that are specifically excluded from the statutory definition of records (see 44 U.S.C. 3301). An agency's records management program also needs to include managing nonrecord materials. There are three specific categories of materials excluded from the statutory definition of records:

(a) Library and museum material (but only if such material is made or acquired and preserved solely for reference or exhibition purposes), including physical exhibits, artifacts, and other material objects lacking evidential value.

(b) Extra copies of documents (but only if the sole reason such copies are preserved is for convenience of reference).

(c) Stocks of publications and of processed documents. Catalogs, trade journals, and other publications that are received from other Government agencies, commercial firms, or private institutions and that require no action and are not part of a case on which action is taken. (Stocks do not include

serial or record sets of agency publications and processed documents, including annual reports, brochures, pamphlets, books, handbooks, posters and maps.)

§ 1222.16 How are nonrecord materials managed?

(a) Agencies must develop recordkeeping requirements to distinguish records from nonrecord materials.

(b) The following guidelines should be used in managing nonrecord materials:

(1) If a clear determination cannot be made, the materials should be treated as records. Agencies may consult with NARA for guidance.

(2) Nonrecord materials must be physically segregated from records or, for electronic non-record materials, readily identified and segregable from records;

(3) Nonrecord materials should be purged when no longer needed for reference. NARA's approval is not required to destroy such materials.

§ 1222.18 Under what conditions may nonrecord materials be removed from Government agencies?

(a) Nonrecord materials, including extra copies of unclassified or formally declassified agency records kept only for convenience of reference, may be removed by departing employees from Government agency custody only with the approval of the head of the agency or the individual(s) authorized to act for the agency on records issues.

(b) National security classified information may not be removed from Government custody, except for a removal of custody taken in accordance with the requirements of the National Industrial Security Program established under Executive Order 12829, as amended, or a successor Order.

(c) Information which is restricted from release under the Privacy Act of 1974 (5 U.S.C. 552a), as amended, or other statutes may not be removed from Government custody except as permitted under those statutes.

(d) This section does not apply to use of records and nonrecord materials in the course of conducting official agency business, including telework and authorized dissemination of information.

§ 1222.20 How are personal files defined and managed?

(a) Personal files are defined in § 1220.18 of this subchapter. This section does not apply to agencies and positions that are covered by the Presidential Records Act of 1978 (44 U.S.C. 2201–2207) (see 36 CFR part 1270 of this chapter).

(b) Personal files must be clearly designated as such and must be maintained separately from the office's official records.

(1) Information about private (non-agency) matters and agency business must not be mixed in outgoing agency documents, such as correspondence and messages.

(2) If information about private matters and agency business appears in a received document, the document is a Federal record. Agencies may make a copy of the document with the personal information deleted or redacted, and treat the copy as the Federal record.

(3) Materials labeled ''personal,'' ''confidential,'' or ''private,'' or similarly designated, and used in the transaction of public business, are Federal records. The use of a label such as ''personal'' does not affect the status of documentary materials in a Federal agency.

Subpart B—Agency Recordkeeping Requirements

§ 1222.22 What records are required to provide for adequate documentation of agency business?

To meet their obligation for adequate and proper documentation, agencies must prescribe the creation and maintenance of records that:

(a) Document the persons, places, things, or matters dealt with by the agency.

(b) Facilitate action by agency officials and their successors in office.

(c) Make possible a proper scrutiny by the Congress or other duly authorized agencies of the Government.

(d) Protect the financial, legal, and other rights of the Government and of persons directly affected by the Government's actions.

(e) Document the formulation and execution of basic policies and decisions and the taking of necessary actions, including all substantive decisions and commitments reached orally (person-to-person, by telecommunications, or in conference) or electronically.

(f) Document important board, committee, or staff meetings.

§ 1222.24 How do agencies establish recordkeeping requirements?

(a) Agencies must ensure that procedures, directives and other issuances; systems planning and development documentation; and other relevant records include recordkeeping requirements for records in all media, including those records created or received on electronic mail systems. Recordkeeping requirements must:

(1) Identify and prescribe specific categories of records to be systematically created or received and maintained by agency personnel in the course of their official duties;

(2) Specify the use of materials and recording techniques that ensure the preservation of records as long as they are needed by the Government;

(3) Specify the manner in which these materials must be maintained wherever held;

(4) Propose how long records must be maintained for agency business through the scheduling process in part 1225 of this subchapter;

(5) Distinguish records from nonrecord materials and comply with the provisions in Subchapter B concerning records scheduling and disposition;

(6) Include procedures to ensure that departing officials and employees do not remove Federal records from agency custody and remove nonrecord materials only in accordance with § 1222.18;

(7) Define the special recordkeeping responsibilities of program managers, information technology staff, systems administrators, and the general recordkeeping responsibilities of all agency employees.

(b) Agencies must provide the training described in § 1220.34(f) of this subchapter and inform all employees that they are responsible and accountable for keeping accurate and complete records of their activities.

§ 1222.26 What are the general recordkeeping requirements for agency programs?

To ensure the adequate and proper documentation of agency programs, each program must develop recordkeeping requirements that identify:

(a) The record series and systems that must be created and maintained to document program policies, procedures, functions, activities, and transactions;

(b) The office responsible for maintaining the record copies of those series and systems, and the applicable system administrator responsible for ensuring authenticity, protection, and ready retrieval of electronic records;

(c) Related records series and systems;

(d) The relationship between paper and electronic files in the same series; and

(e) Policies, procedures, and strategies for ensuring that records are retained long enough to meet programmatic, administrative, fiscal, legal, and historical needs as authorized in a NARA-approved disposition schedule.

§ 1222.28 What are the series level recordkeeping requirements?

To ensure that record series and systems adequately document agency policies, transactions, and activities, each program must develop recordkeeping requirements for records series and systems that include:

(a) Identification of information and documentation that must be included in the series and/or system;

(b) Arrangement of each series and the records within the series and/or system;

(c) Identification of the location of the records and the staff responsible for maintaining the records;

(d) Policies and procedures for maintaining the documentation of phone calls, meetings, instant messages, and electronic mail exchanges that include substantive information about agency policies and activities;

(e) Policies and procedures for identifying working files and for determining

the record status of working files in paper and electronic form; and

(f) Policies and procedures for maintaining series consisting of different media.

§ 1222.30 When must agencies comply with the recordkeeping requirements of other agencies?

Agencies must comply with recordkeeping requirements that are imposed government-wide by another agency with jurisdiction over the program or activity being conducted, e.g., requirements for records concerning hazardous waste. Affected agencies must include these requirements in appropriate directives or other official issuances prescribing the agency's organization, functions, or activities.

§ 1222.32 How do agencies manage records created or received by contractors?

(a) Agency officials responsible for administering contracts must safeguard records created, processed, or in the possession of a contractor or a non-Federal entity by taking the following steps:

(1) Agencies must ensure that contractors performing Federal government agency functions create and maintain records that document these activities. Agencies must specify in the contract Government ownership and the delivery to the Government of all records necessary for the adequate and proper documentation of contractor-operated agency activities and programs in accordance with requirements of the Federal Acquisition Regulation (FAR) (Office of Federal Procurement Policy Act of 1974 (Pub. L. 93–400), as amended by Pub. L. 96–83 41 U.S.C.), and, where applicable, the Defense Federal Acquisition Regulation Supplement (DFARS) (48 CFR parts 200–299).

(2) Records management oversight of contract records is necessary to ensure that all recordkeeping needs are met. All records created for Government use and delivered to, or under the legal control of, the Government must be managed in accordance with Federal law. In addition, electronic records and background electronic data specified for delivery to the contracting agency must be accompanied by sufficient technical documentation to permit understanding and use of the records and data.

(3) Contracts that require the creation of data for the Government's use must specify, in addition to the final product, delivery of background supporting data or other records that may have reuse value to the Government. To determine what background supporting data or other records that contractors must deliver, program and contracting officials must consult with agency records and information managers and historians and, when appropriate, with other Government agencies to ensure that all Government needs are met, especially when the data deliverables support a new agency mission or a new Government program.

(4) Deferred ordering and delivery-of-data clauses and rights-in-data clauses must be included in contracts whenever necessary to ensure adequate and proper documentation or because the data have reuse value to the Government.

(b) All data created for Government use and delivered to, or falling under the legal control of, the Government are Federal records subject to the provisions of 44 U.S.C. chapters 21, 29, 31, and 33, the Freedom of Information Act (FOIA) (5 U.S.C. 552), as amended, and the Privacy Act of 1974 (5 U.S.C. 552a), as amended, and must be managed and scheduled for disposition only as provided in Subchapter B.

(c) Agencies must ensure that appropriate authority for retention of classified materials has been granted to contractors or non-Government entities participating in the National Industrial Security Program (NISP), established under Executive order 12829, as amended, or a successor Order.

§ 1222.34 How must agencies maintain records?

Agencies must implement a records maintenance program so that complete records are filed or otherwise identified and preserved, records can be readily found when needed, and permanent and temporary records are physically segregated from each other or, for electronic records, segregable. Agency records maintenance programs must:

(a) Institute procedures for organizing and storing records;

(b) Maintain electronic, audiovisual and cartographic, and microform records in accordance with 36 CFR parts 1236, 1237, and 1238 of this subchapter, respectively;

(c) Assign responsibilities for maintenance of records in all formats within each agency component, including designation of the officials that are responsible for maintenance and disposition of electronic records and management of automated systems used for recordkeeping;

(d) Institute reference and retrieval procedures and controls that:

(1) Facilitate the finding, charging out, and refiling of records, including safeguards against loss during transit; and

(2) Ensure that access to electronic records minimizes the risk of unauthorized additions, deletions, or alterations;

(e) Issue appropriate instructions to all agency employees on handling and protecting records;

(f) Maintain records and nonrecord materials separately, in accordance with § 1222.16;

(g) Maintain personal files separately from records in accordance with § 1222.20; and

(h) Comply with 36 CFR parts 1232 and 1234 of this subchapter when storing records in a records facility.

PART 1223—MANAGING VITAL RECORDS

Sec.

1223.1 What are the authorities for Part 1223?
1223.2 What definitions apply to this part?
1223.3 What standards are used as guidance for Part 1223?
1223.4 What publications are incorporated by reference in this part?
1223.10 What is the purpose of Part 1223?
1223.12 What are the objectives of a vital records program?
1223.14 What elements must a vital records program include?
1223.16 How are vital records identified?
1223.18 Must vital records be in a particular form or format?
1223.20 What are the requirements for accessing vital records during an emergency?
1223.22 How must agencies protect vital records?
1223.24 When can vital records be destroyed?

AUTHORITY: 44 U.S.C. 3101; E.O. 12656, 53 FR 47491; E.O. 13231, 66 FR 53063.

SOURCE: 74 FR 51014, Oct. 2, 2009, unless otherwise noted.

§ 1223.1 What are the authorities for Part 1223?

(a) The authorities for this part are 44 U.S.C. 3101; Executive Orders 12656, Assignment of Emergency Preparedness Responsibilities, and 13231, Critical Infrastructure Protection in the Information Age; and National Security Presidential Directive (NSPD 51)/Homeland Security Presidential Directive (HSPD–20) or applicable successor directives. These authorities require the head of each agency to make and preserve records that contain adequate and proper documentation of the organization and to perform national security emergency preparedness functions.

(b) These regulations are in conformance with guidance provided in Federal Continuity Directive (FCD) 1, Federal Executive Branch National Continuity Program and Requirements, and FCD 2, Federal Executive Branch Mission Essential Function and Primary Mission Essential Function Identification and Submission Process.

§ 1223.2 What definitions apply to this part?

(a) See § 1220.18 of this subchapter for definitions of terms used throughout Subchapter B, including part 1223.

(b) As used in part 1223—

Cycle means the periodic removal of obsolete copies of vital records and their replacement with copies of current vital records. This may occur daily, weekly, quarterly, annually or at other designated intervals.

Disaster means an unexpected occurrence inflicting widespread destruction and distress and having long-term adverse effects on agency operations. Each agency defines what a long-term adverse effect is in relation to its most critical program activities.

Emergency means a situation or an occurrence of a serious nature, developing suddenly and unexpectedly, and demanding immediate action. This is

generally of short duration, for example, an interruption of normal agency operations for a week or less. It may involve electrical failure or minor flooding caused by broken pipes.

Emergency operating records are those types of vital records essential to the continued functioning or reconstitution of an organization during and after an emergency. Included are emergency plans and directive(s), orders of succession, delegations of authority, staffing assignments, selected program records needed to continue the most critical agency operations, as well as related policy or procedural records that assist agency staff in conducting operations under emergency conditions and for resuming normal operations after an emergency.

Legal and financial rights records are that type of vital records essential to protect the legal and financial rights of the Government and of the individuals directly affected by its activities. Examples include accounts receivable records, social security records, payroll records, retirement records, and insurance records. These records were formerly defined as ''rights-and-interests'' records.

National security emergency means any occurrence, including natural disaster, military attack, technological emergency, or other emergency, that seriously degrades or threatens the national security of the United States, as defined in Executive Order 12656.

Off-site storage means a facility other than an agency's normal place of business where records are kept until eligible for final disposition. Vital records may be kept at off-site storage to ensure that they are not damaged or destroyed should an emergency occur in an agency's normal place of business.

Vital records means essential agency records that are needed to meet operational responsibilities under national security emergencies or other emergency conditions (emergency operating records) or to protect the legal and financial rights of the Government and those affected by Government activities (legal and financial rights records).

Vital records program means the policies, plans, and procedures developed and implemented and the resources needed to identify, use, and protect the essential records needed to meet operational responsibilities under national security emergencies or other emergency conditions or to protect the Government's rights or those of its citizens. This is a program element of an agency's emergency management function.

§ 1223.3 What standards are used as guidance for Part 1223?

These regulations conform with guidance provided in ISO 15489–1:2001. Paragraphs 4 (Benefits of records management), Paragraphs 7.1 (Principles of records management programmes) and 9.6 (Storage and handling) apply to vital records.

§ 1223.4 What publications are incorporated by reference in this part?

(a) Certain material is incorporated by reference into this part with the approval of the Director of the Federal Register under 5 U.S.C. 552(a) and 1 CFR part 51. To enforce any edition other than that specified in this section, NARA must publish notice of change in the FEDERAL REGISTER and the material must be available to the public. All approved material is available for inspection at the Office of the Federal Register. For information on the availability of this material at the Office of the Federal Register, call 202–741–6030 or go to *http://www.archives.gov/federal_register/code_of_federal_regulations/ibr_locations.html*.

(b) The material incorporated by reference is also available for inspection at NARA's Archives Library Information Center (NWCCA), Room 2380, 8601 Adelphi Road, College Park, MD 20740–6001, phone number (301) 837–3415, and is available from the sources listed below.

(c) The following Web publication is available on-line at *http://www.fema.gov/pdf/about/offices/fcd1.pdf*; it is published by the Department of Homeland Security (DHS), 245 Murray Lane, Washington, DC, 20528, phone number, (202) 245–2499.

(1) Federal Continuity Directive 1 (''FCD 1''): Federal Executive Branch National Continuity Program and Requirements, February 2008, IBR approved for § 1223.14.

(2) [Reserved]

§ 1223.10 What is the purpose of Part 1223?

Part 1223 specifies policies and procedures needed to establish a program to identify, protect, and manage vital records as part of an agency's continuity of operation plan designed to meet emergency management responsibilities.

§ 1223.12 What are the objectives of a vital records program?

A vital records program has two objectives:

(a) It provides an agency with the information it needs to conduct its business under other than normal operating conditions and to resume normal business afterward; and

(b) It enables agency officials to identify and protect the most important records dealing with the legal and financial rights of the agency and of persons directly affected by the agency's actions.

§ 1223.14 What elements must a vital records program include?

To achieve compliance with this section, an agency's vital records program must contain all elements listed in FCD 1, Annex I (incorporated by reference, see § 1223.4). In carrying out a vital records program, agencies must:

(a) Specify agency staff responsibilities;

(b) Appropriately inform all staff about vital records;

(c) Ensure that the designation of vital records is current and complete; and

(d) Ensure that vital records are adequately protected, accessible, and immediately usable.

§ 1223.16 How are vital records identified?

Agencies identify vital records in the context of the emergency management function. Vital records are those that are needed to perform the most critical functions of the agency and those needed to protect legal and financial rights of the Government and of the persons affected by its actions. Vital records also include emergency plans and related records that specify how an agency will respond to an emergency. The informational content of records series and electronic records systems determines which are vital records. Only the most recent and complete sources of the information are vital records.

§ 1223.18 Must vital records be in a particular form or format?

(a) Vital records can be original records or copies of records. Consult NARA records management guidance on vital records at *http://www.archives.gov/records-mgmt/vital-records/index.html* for further information.

(b) Records may be maintained on a variety of media including paper, magnetic tape, optical disk, photographic film, and microform. In selecting the media, agencies must ensure that equipment needed to read the specific media will be available following an emergency or disaster.

§ 1223.20 What are the requirements for accessing vital records during an emergency?

Agencies must establish retrieval procedures for vital records that are easily implemented, especially since individuals unfamiliar with the records may need to use them in an emergency. For electronic records systems, agencies must also ensure that appropriate hardware, software, and system documentation adequate to operate the system and access the records will be available in case of an emergency.

§ 1223.22 How must agencies protect vital records?

Agencies must take appropriate measures to ensure the survival of the vital records or copies of vital records in case of an emergency.

(a) *Duplication.* Agencies may choose to duplicate vital records as the primary protection method. Duplication can be to the same medium as the original record or to a different medium. When agencies choose duplication as a protection method, the copy of the vital record stored off-site is normally a duplicate of the original record. The agency may store the original records off-site if their protection is necessary, or if it does not need to keep the original records at its normal place of business.

(b) *Dispersal.* Once records are duplicated, they must be dispersed to sites a sufficient distance away to avoid being subject to the same emergency. Dispersal sites may be other office locations of the same agency or some other site.

(c) *Storage considerations.* Copies of emergency operating vital records must be accessible in a very short period of time for use in the event of an emergency. Copies of legal and financial rights records may not be needed as quickly. In deciding where to store vital record copies, agencies must treat records that have the properties of both categories, that is, emergency operating and legal and financial rights records, as emergency operating records.

(1) The off-site copy of legal and financial rights vital records may be stored at an off-site agency location or, in accordance with § 1233.12 of this subchapter, at a records storage facility.

(2) When using a NARA records storage facility for storing vital records that are duplicate copies of original records, the agency must specify on the SF 135, Records Transmittal and Receipt, that they are vital records (duplicate copies) and the medium on which they are maintained. The agency must also periodically cycle (update) them by removing obsolete items and replacing them with the most recent version.

§ 1223.24 When can vital records be destroyed?

The disposition of vital records that are original records is governed by records schedules approved by NARA (see part 1225, Scheduling Records, of this subchapter). Agencies must not destroy original records that are not scheduled. Duplicate copies created and maintained for vital records purposes only may be destroyed when superseded or obsolete during the routine vital records cycle process.

PART 1224—RECORDS DISPOSITION PROGRAMS

Sec.

1224.1 What are the authorities for Part 1224?
1224.2 What definitions apply to this part?
1224.3 What standards are used as guidance for this part?
1224.10 What must agencies do to implement an effective records disposition program?

AUTHORITY: 44 U.S.C. 2111, 2904, 3102, and 3301.

SOURCE: 74 FR 51014, Oct. 2, 2009, unless otherwise noted.

§ 1224.1 What are the authorities for Part 1224?

The statutory authorities for this part are 44 U.S.C. 2111, 2904, 3102, and 3301.

§ 1224.2 What definitions apply to this part?

See § 1220.18 of this subchapter for definitions of terms used in part 1224.

§ 1224.3 What standards are used as guidance for this part?

These regulations conform with guidance provided in ISO 15489–1:2001, Information and documentation—Records management. Paragraphs 7.1 (Principles of records management programmes), 8.3.7 (Retention and disposition), 8.5 (Discontinuing records systems), and 9.9 (Implementing disposition) apply to records disposition.

§ 1224.10 What must agencies do to implement an effective records disposition program?

In order to properly implement the provisions of §§ 1220.30(c)(2), 1220.32(e), and 1220.34(c), (f), and (g) of this subchapter agencies must:

(a) Ensure that all records are scheduled in accordance with part 1225 of this subchapter, schedules are implemented in accordance with part 1226 of this subchapter, and permanent records are transferred to the National Archives of the United States.

(b) Promptly disseminate and implement NARA-approved agency schedules and additions and changes to the General Records Schedules (GRS) in accordance with § 1226.12(a) of this subchapter.

(c) Regularly review agency-generated schedules, and, if necessary, update them.

(d) Incorporate records retention and disposition functionality during the design, development, and implementation

of new or revised recordkeeping systems (whether paper or electronic). See § 1236.6 of this subchapter.

(e) Provide training and guidance to all employees on agency records disposition requirements and procedures and other significant aspects of the records disposition program. When a new or revised records schedule is issued, provide specific guidance to employees responsible for applying the schedule.

PART 1225—SCHEDULING RECORDS

Sec.

1225.1 What are the authorities for this part?
1225.2 What definitions apply to this part?
1225.3 What standards are used as guidance for this part?
1225.10 What Federal records must be scheduled?
1225.12 How are records schedules developed?
1225.14 How do agencies schedule permanent records?
1225.16 How do agencies schedule temporary records?
1225.18 How do agencies request records disposition authority?
1225.20 When do agencies have to get GAO approval for schedules?
1225.22 When must scheduled records be rescheduled?
1225.24 When can an agency apply previously approved schedules to electronic records?
1225.26 How do agencies change a disposition authority?

AUTHORITY: 44 U.S.C. 2111, 2904, 2905, 3102, and Chapter 33.

SOURCE: 74 FR 51014, Oct. 2, 2009, unless otherwise noted.

§ 1225.1 What are the authorities for this part?

The statutory authorities for this part are 44 U.S.C. 2111, 2904, 2905, 3102, and Chapter 33.

§ 1225.2 What definitions apply to this part?

See § 1220.18 of this subchapter for definitions of terms used throughout Subchapter B, including part 1225.

§ 1225.3 What standards are used as guidance for this part?

These regulations conform with guidance provided in ISO 15489–1:2001, Information and documentation—Records management. Paragraphs 4 (Benefits of records management), 6.3 (Responsibilities), 7.1 (Principles of records management programmes), 8.3.7 (Retention and disposition), 9.2 (Determining how long to retain records), 9.10 (Documenting records management processes), 10 (Records management processes and controls), and 11 (Monitoring and auditing) apply to records scheduling.

§ 1225.10 What Federal records must be scheduled?

All Federal records, including those created or maintained for the Government by a contractor, must be covered by a NARA-approved agency disposition authority, SF 115, Request for Records Disposition Authority, or the NARA General Records Schedules.

§ 1225.12 How are records schedules developed?

The principal steps in developing agency records schedules are listed below. Additional details that may be helpful are provided in the NARA records management handbook, *Disposition of Federal Records* at *http://www.archives.gov/records-mgmt/publications/disposition-of-federal-records/index.html*.

(a) Conduct a functional or work process analysis to identify the functions or activities performed by each organization or unit. Identify the recordkeeping requirements for each.

(b) Prepare an inventory for each function or activity to identify records series, systems, and nonrecord materials.

(c) Determine the appropriate scope of the records schedule items, e.g., individual series/system component, work process, group of related work processes, or broad program area.

(d) Evaluate the period of time the agency needs each records series or system based on use, value to agency operations and oversight agencies, and legal obligations. Determine whether a fixed or flexible retention period is more appropriate. For records proposed

as temporary, specify a retention period that meets agency business needs and legal requirements. For records proposed as permanent records, identify how long the records are needed by the agency before they are transferred to NARA.

(e) Determine whether the proposed disposition should be limited to records in a specific medium. Records schedules submitted to NARA for approval on or after December 17, 2007, are media neutral, *i.e.*, the disposition instructions apply to the described records in any medium, unless the schedule identifies a specific medium for a specific series.

(f) Compile a schedule for records, including descriptions and disposition instructions for each item, using an SF 115.

(g) Obtain internal clearances, as appropriate, from program offices and other stakeholders such as the legal counsel, chief information officer, electronic systems manager, and agency historian, as appropriate.

(h) Obtain approval from the Government Accountability Office (GAO), when required (see § 1225.20(a) for the categories that require GAO approval).

(i) Submit an SF 115 covering only new or revised record items to NARA for approval (see § 1225.18(d)).

(j) The disposition instructions on SF 115s approved by the Archivist of the United States are mandatory (44 U.S.C. 3314).

§ 1225.14 How do agencies schedule permanent records?

(a) *Identification*. Identify potentially permanent records. Useful guidelines in the identification of permanent Federal records may be found in the NARA records management handbook, *Disposition of Federal Records* (see § 1225.12 for the Web site address of this publication).

(b) *Requirements*. Each item proposed for permanent retention on an SF 115 must include the following:

(1) Descriptive title of the records series, component of an information system, or appropriate aggregation of series and/or information system components. The descriptive title must be meaningful to agency personnel;

(2) Complete description of the records including:

(i) Agency function;

(ii) Physical type, if appropriate;

(iii) Inclusive dates;

(iv) Statement of how records are arranged;

(v) Statement of restrictions on access under the FOIA if the records are proposed for immediate transfer;

(3) Disposition instructions developed using the following guidelines:

(i) If the records series or system is current and continuing, the SF 115 must specify the period of time after which the records will be transferred to the National Archives of the United States, and if appropriate, the time period for returning inactive records to an approved records storage facility.

(ii) If the records series or system is nonrecurring, i.e., no additional records will be created or acquired, the agency must propose either that the records be transferred to the National Archives of the United States immediately or set transfer for a fixed date in the future.

(c) *Determination*. NARA will appraise the records to determine if they have sufficient value to warrant archival permanent preservation. If NARA determines either that records are not permanent or that the transfer instructions are not appropriate:

(1) NARA will notify the agency and negotiate an appropriate disposition. The disposition instruction on the SF 115 will be modified prior to NARA approval; or

(2) If NARA and the agency cannot agree on the disposition instruction for an item(s), the items(s) will be withdrawn. In these cases, the agency must submit an SF 115 with a revised proposal for disposition; unscheduled records must be treated as permanent until a new schedule is approved.

§ 1225.16 How do agencies schedule temporary records?

(a) *Identification*. Federal agencies request authority to dispose of records, either immediately or on a recurring basis. Requests for immediate disposal are limited to existing records that no longer accumulate. For recurring records, approved schedules provide continuing authority to destroy the

records. The retention periods approved by NARA are mandatory, and the agency must dispose of the records after expiration of the retention period, except as provided in §§ 1226.18 and 1226.20 of this subchapter.

(b) *Requirements*. Each item on an SF 115 proposed for eventual destruction must include the following:

(1) Descriptive title familiar to agency personnel;

(2) Description of the records including agency function, physical type(s) and informational content;

(3) Disposition instructions developed using the following guidelines:

(i) If the record series, component of an electronic information system, or appropriate aggregation of series and/or automated system components is current and continuing, the SF 115 must include file breaks, retention period or event after which the records will be destroyed, and, if appropriate, transfer period for retiring inactive records to an approved records storage facility.

(ii) If the records series, system, or other aggregation is nonrecurring, *i.e.*, no additional records will be created or acquired, the SF 115 must specify either immediate destruction or destruction on a future date.

(c) *Determination*. If NARA determines that the proposed disposition is not consistent with the value of the records, it will request that the agency make appropriate changes.

(1) If NARA determines that records proposed as temporary merit permanent retention and transfer to the National Archives of the United States, the agency must change the disposition instruction prior to approval of the SF 115.

(2) If NARA and the agency cannot agree on the retention period for an item(s), the items(s) will be withdrawn. In these cases, the agency must submit an SF 115 with a revised proposal for disposition; unscheduled records must be treated as permanent until a new schedule is approved.

§ 1225.18 How do agencies request records disposition authority?

(a) Federal agencies submit an SF 115 to NARA to request authority to schedule (establish the disposition for) permanent and temporary records, either on a recurring or one-time basis.

(b) SF 115s include only records not covered by the General Records Schedules (GRS) (see part 1227 of this subchapter), deviations from the GRS (see § 1227.12 of this subchapter), or previously scheduled records requiring changes in retention periods or substantive changes in description.

(c) SF 115s do not include nonrecord material. The disposition of nonrecord materials is determined by agencies and does not require NARA approval.

(d) The following elements are required on a SF 115:

(1) Title and description of the records covered by each item.

(2) Disposition instructions that can be readily applied. Records schedules must provide for:

(i) The destruction of records that no longer have sufficient value to justify further retention (see § 1224.10(b) of this subchapter); and

(ii) The identification of potentially permanent records and provisions for their transfer to the legal custody of NARA.

(3) Certification that the records proposed for disposition are not now needed for the business of the agency or will not be needed after the specified retention periods. The signature of the authorized agency representative on the SF 115 provides certification.

(e) NARA will return SF 115s that are improperly prepared. The agency must make the necessary corrections and resubmit the form to NARA.

§ 1225.20 When do agencies have to get GAO approval for schedules?

(a), Federal agencies must obtain the approval of the Comptroller General for the disposal of the following types of records:

(1) Program records less than 3 years old,

(2) Deviations from General Records Schedule 2–10 (see § 1227.10 of this subchapter for a definition of general records schedules), and

(b) This approval must be obtained before NARA will approve the disposition request.

§ 1225.22 When must scheduled records be rescheduled?

Agencies must submit an SF 115, Request for Records Disposition Authority, to NARA in the following situations:

(a) If an interagency reorganization reassigns functions to an existing department or agency, the gaining organization must submit an SF 115 to NARA within one year of the reorganization. Schedules approved for one department or independent agency do not apply to records of other departments or agencies.

(b) If a new department or agency assumes functions from an existing one, the new agency must schedule records documenting the acquired functions and all other records not covered by the GRS within two years.

(c) If an agency needs to deviate from retention periods in the GRS.

(d) If an agency needs to change retention periods for records previously appraised as temporary by NARA.

(e) If an agency needs to change the approved disposition of records from permanent to temporary or vice versa.

(f) If an agency needs to modify the description of records because the informational content of the records and/or the function documented by the records changes.

(g) If an agency decides to change the scope of the records schedule items to include a greater or lesser aggregation of records (see § 1225.12(c)), unless § 1225.24 applies.

(h) Agencies must submit a new schedule to NARA for electronic versions of previously scheduled records if:

(1) The content and function of the records have changed significantly (e.g., the electronic records contain information that is substantially different from the information included in the hard copy series or are used for different purposes).

(2) The previously approved schedule explicitly excludes electronic records.

(3) The electronic records consist of program records maintained on an agency Web site.

(4) The electronic records consist of temporary program records maintained in a format other than scanned image AND the previously approved schedule is not media neutral.

§ 1225.24 When can an agency apply previously approved schedules to electronic records?

If the conditions specified in § 1225.22(h) do not apply, the following conditions apply:

(a) *Permanent records.* (1) The agency may apply a previously approved schedule for hard copy records to electronic versions of the permanent records when the electronic records system replaces a single series of hard copy permanent records or the electronic records consist of information drawn from multiple previously scheduled permanent series. Agencies must notify the National Archives and Records Administration, Modern Records Programs (NWM), 8601 Adelphi Road, College Park, MD 20740–6001, phone number 301–837–1738, in writing of series of records that have been previously scheduled as permanent in hard copy form, including special media records as described in 36 CFR 1235.52 of this subchapter. An agency should send the notification to the NARA unit that processes its schedules. The notification must be submitted within 90 days of when the electronic recordkeeping system becomes operational and must contain the:

(i) Name of agency;

(ii) Name of the electronic system;

(iii) Organizational unit(s) or agency program that records support;

(iv) Current disposition authority reference; and

(v) Format of the records (e.g., database, scanned images, digital photographs, *etc.*).

(2) If the electronic records include information drawn from both temporary and permanent hard copy series, an agency either may apply a previously approved permanent disposition authority, after submitting the notification required by paragraph (a)(1) of this section or may submit a new schedule if the agency believes the electronic records do not warrant permanent retention.

(b) *Temporary still pictures, sound recordings, motion picture film, and video recordings.* The agency must apply the previously approved schedule to digital

versions. If changes in the approved schedule are required, follow §1225.26.

(c) *Scanned images of temporary records, including temporary program records.* The agency must apply the previously approved schedule. If changes in the approved schedule are required, follow §1225.26.

(d) *Other temporary records maintained in an electronic format other than scanned images.* (1) For temporary records that are covered by an item in a General Records Schedule (other than those General Records Schedule items that exclude electronic master files and databases) or an agency-specific schedule that pertains to administrative housekeeping activities, apply the previously approved schedule. If the electronic records consist of information drawn from multiple hard copy series, apply the previously approved schedule item with the longest retention period.

(2) For temporary program records covered by a NARA-approved media neutral schedule item (*i.e.*, the item appears on a schedule submitted to NARA for approval before December 17, 2007, that is explicitly stated to be media neutral, or it appears on a schedule submitted to NARA for approval on or after December 17, 2007, that is not explicitly limited to a specific recordkeeping medium), apply the previously approved schedule.

§1225.26 How do agencies change a disposition authority?

Agencies must submit an SF 115 to permanently change the approved disposition of records. Disposition authorities are automatically superseded by approval of a later SF 115 for the same records unless the later SF 115 specifies an effective date. As provided in §1226.20(c) of this subchapter, agencies are authorized to retain records eligible for destruction until the new schedule is approved.

(a) SF 115s that revise previously approved disposition authorities must cite all of the following, if applicable:

(1) The SF 115 and item numbers to be superseded;

(2) The General Records Schedules and item numbers that cover the records, if any; and

(3) The current published records disposition manual and item numbers; or the General Records Schedules and item numbers that cover the records.

(b) Agencies must submit with the SF 115 an explanation and justification for the change.

(c) For temporary retention of records beyond their normal retention period, see §1226.18 of this subchapter.

(d) Agencies must secure NARA approval of a change in the period of time that permanent records will remain in agency legal custody prior to transfer to the National Archives of the United States. To request approval, agencies send written requests to the National Archives and Records Administration, Modern Records Programs (NWM), 8601 Adelphi Road, College Park, MD 20740–6001, phone number (301) 837–1738. NARA approval is documented as an annotation to the schedule item. A new SF 115 is not required to extend the time period of agency legal custody.

PART 1226—IMPLEMENTING DISPOSITION

Sec.

1226.1 What are the general authorities for this part?
1226.2 What definitions apply to this part?
1226.3 What standards are used as guidance for this part?
1226.10 Must agencies apply approved schedules to their records?
1226.12 How do agencies disseminate approved schedules?
1226.14 What are the limitations in applying approved records schedule?
1226.16 Does NARA ever withdraw disposition authority?
1226.18 When may agencies temporarily extend retention periods?
1226.20 How do agencies temporarily extend retention periods?
1226.22 When must agencies transfer permanent records?
1226.24 How must agencies destroy temporary records?
1226.26 How do agencies donate temporary records?

AUTHORITY: 44 U.S.C. 2111, 2904, 3102, and 3301.

SOURCE: 74 FR 51014, Oct. 2, 2009, unless otherwise noted.

§ 1226.1 What are the general authorities for this part?

The statutory authorities are 44 U.S.C. 2107, 2111, 2904, 3102, 3301 and 3302.

§ 1226.2 What definitions apply to this part?

See § 1220.18 of this subchapter for definitions of terms used throughout Subchapter B, including part 1226.

§ 1226.3 What standards are used as guidance for this part?

These regulations conform with guidance in ISO 15489–1:2001, Information and documentation—Records management, sections 8.3.7 (Retention and disposition), 8.5 (Discontinuing records systems), 9.2 (Determining how long to retain records), and 9.9 (Implementing disposition).

§ 1226.10 Must agencies apply approved schedules to their records?

The application of approved schedules is mandatory except as provided in §§ 1226.16 and 1226.18. Federal records must be retained as specified in the schedule to conduct Government business, protect rights, avoid waste, and preserve permanent records for transfer to the National Archives of the United States.

§ 1226.12 How do agencies disseminate approved schedules?

(a) Agencies must issue disposition authorities through their internal directives system within six months of approval of the SF 115 or GRS to ensure proper distribution and application of the schedule. The directive must cite the legal authority (GRS or SF 115 and item numbers) for each schedule item covering records.

(b) Agencies must send, via link or file, an electronic copy of each published agency schedule, directive, and other policy issuance relating to records disposition to NARA at *RM.Communications@nara.gov* when the directive, manual, or policy issuance is posted or distributed.

(c) The submission must include the name, title, agency, address, and phone number of the submitter. If the comprehensive records schedule or other policy issuance is posted on a publicly available Web site, the agency must provide the full Internet address (URL).

§ 1226.14 What are the limitations in applying approved records schedules?

Agencies must apply the approved records disposition schedules to their agency's records as follows

(a) Records described by items marked ''disposition not approved'' or ''withdrawn'' may not be destroyed until a specific disposition has been approved by NARA.

(b) Disposition authorities for items on approved SF 115s that specify an organizational component of the department or independent agency as the creator or custodian of the records may be applied to the same records after internal reorganization, but only if the nature, content, and functional importance of the records remain the same. Authority approved for items described in a functional format may be applied to any organizational component within the department or independent agency that is responsible for the relevant function.

(c) Disposition authorities approved for one department or independent agency may not be applied to records of another department or agency. Departments or agencies that acquire records from another department or agency, and/or continue creating the same series of records previously created by another department or agency through interagency reorganization must promptly submit an SF 115 to NARA for disposition authorization. Until the new records schedule is approved, the records are unscheduled. See § 1225.22 of this subchapter.

(d) Unless otherwise specified, newly approved disposition authorities apply retroactively to all existing records as described in the schedule.

(e) When required by court order (*i.e.*, order for expungement or destruction), an agency may destroy temporary records before their NARA-authorized disposition date. In accordance with § 1230.14 of this subchapter, an agency must notify the National Archives and Records Administration, Modern Records Programs (NWM), 8601 Adelphi Road, College Park, MD 20740–6001,

phone number (301) 837–1738, when permanent or unscheduled records are to be destroyed in response to a court order. If the records have significant historical value, NARA will promptly advise the agency of any concerns over their destruction.

§ 1226.16 Does NARA ever withdraw disposition authority?

(a) When required to ensure the preservation of Government records, or when required by an emergency, or to maintain efficiency of Government operations, NARA will withdraw disposal authorizations in approved schedules (44 U.S.C. 2909). This withdrawal may apply to particular items on agency schedules or may apply to all existing authorizations for a specified type of record in any or all agencies.

(b) To both impose and rescind the withdrawal, NARA will notify the affected agency or agencies in writing, either by letter or NARA bulletin.

§ 1226.18 When may agencies temporarily extend retention periods?

(a) Agencies may temporarily retain records approved for destruction beyond their NARA-approved retention period if special circumstances alter the normal administrative, legal, or fiscal value of the records.

(1) Agencies must not retain records whose disposal after a specified period is required by statute, unless retention is ordered by a Court.

(2) In determining whether or not to temporarily extend the retention period of records, agencies must ensure that the extension of retention is consistent with the requirement contained in 5 U.S.C. 552a (Privacy Act of 1974, as amended) that records concerning individuals are maintained only if relevant and necessary to accomplish a purpose of the agency that is required by law or Executive order.

(b) If the records that are to be temporarily retained beyond their approved destruction date have been transferred to records storage facilities, agencies must notify the facility.

(c) Once the special circumstances that require extended retention of records have elapsed, agencies must destroy the records in accordance with the NARA-approved disposition instructions.

(d) Agencies must submit an SF 115 to NARA to change schedule provisions on a continuing basis in accordance with § 1225.26 of this subchapter. Agencies may retain records eligible for destruction until the new schedule is approved.

§ 1226.20 How do agencies temporarily extend retention periods?

(a) Agencies must secure NARA written approval to retain records series or systems that are eligible for destruction under NARA-approved schedules except when:

(1) The agency has requested a change in the records schedule in accordance with § 1225.26 of this subchapter, in which case the agency is authorized to retain records eligible for destruction until the new SF 115 is approved;

(2) The records will be needed for less than one year; or

(3) A court order requires retention of the records.

(b) To request an extension, agencies must send a letter to the National Archives and Records Administration, Modern Records Programs (NWM), 8601 Adelphi Road, College Park, MD 20740–6001, phone number (301) 837–1738. Along with a justification, the request must include:

(1) A concise description of the records series for which the extension is requested.

(2) A citation to the agency records schedule or the GRS currently governing disposition of the records;

(3) A statement of the estimated period of time that the records will be required; and

(4) For records in the agency's custody, a statement of the current and proposed physical location of the records.

(c) Agencies must ensure that records in records storage facilities are retained for the duration of the extension.

§ 1226.22 When must agencies transfer permanent records?

All records scheduled as permanent must be transferred to the National Archives of the United States after the

period specified on the SF 115 in accordance with procedures specified under § 1235.12 of this subchapter.

§ 1226.24 How must agencies destroy temporary records?

(a) *Sale or salvage of unrestricted records*—(1) *Paper records*. Paper records to be destroyed normally must be sold as wastepaper, or otherwise salvaged. All sales must follow the established procedures for the sale of surplus personal property. (See 41 CFR part 101—45, Sale, Abandonment, or Destruction of Personal Property.) The contract for sale must prohibit the resale of all records for use as records or documents.

(2) *Records on electronic and other media*. Records other than paper records (audio, visual, and electronic records on physical media data tapes, disks, and diskettes) may be salvaged and sold in the same manner and under the same conditions as paper records.

(b) *Destruction of unrestricted records*. Unrestricted records that agencies cannot sell or otherwise salvage must be destroyed by burning, pulping, shredding, macerating, or other suitable means authorized by implementing regulations issued under E.O. 12958, as amended or its successor.

(c) *Destruction of classified or otherwise restricted records*. If the records are restricted because they are national security classified or exempted from disclosure by statute, including the Privacy Act, or regulation:

(1) *Paper records*. For paper records, the agency or its wastepaper contractor must definitively destroy the information contained in the records by one of the means specified in paragraph (b) of this section and their destruction must be witnessed either by a Federal employee or, if authorized by the agency, by a contractor employee.

(2) *Electronic records*. Electronic records scheduled for destruction must be disposed of in a manner that ensures protection of any sensitive, proprietary, or national security information. Magnetic recording media previously used for electronic records containing sensitive, proprietary, or national security information must not be reused if the previously recorded information can be compromised in any way by reuse of the media.

§ 1226.26 How do agencies donate temporary records?

(a) Agencies must obtain written approval from NARA before donating records eligible for disposal to an appropriate person, organization, institution, corporation, or government (including a foreign government) that has requested them. Records that are not eligible for disposal cannot be donated.

(b) Agencies request the approval of such a donation by sending a letter to the National Archives and Records Administration, Modern Records Programs (NWM), 8601 Adelphi Road, College Park, MD 20740–6001, phone number (301) 837–1738. The request must include:

(1) The name of the department or agency, and relevant subdivisions, having custody of the records;

(2) The name and address of the proposed recipient of the records;

(3) A list containing:

(i) Description of the records to be transferred,

(ii) The inclusive dates of the records,

(iii) The SF 115 or GRS and item numbers that authorize destruction of the records;

(4) A statement providing evidence:

(i) That the proposed donation is in the best interests of the Government,

(ii) That the proposed recipient agrees not to sell the records as records or documents, and

(iii) That the donation will be made without cost to the U.S. Government;

(5) A certification that:

(i) The records contain no information the disclosure of which is prohibited by law or contrary to the public interest, and/or

(ii) The records proposed for transfer to a person or commercial business are directly pertinent to the custody or operations of properties acquired from the Government, and/or

(iii) A foreign government desiring the records has an official interest in them.

(c) NARA will determine whether the donation is in the public interest and notify the requesting agency of its decision in writing. If NARA determines

such a proposed donation is contrary to the public interest, the agency must destroy the records in accordance with the appropriate disposition authority.

PART 1227—GENERAL RECORDS SCHEDULES

Sec.
1227.1 What are the authorities for Part 1227?
1227.2 What definitions apply to this part?
1227.3 What standards are used as guidance for this part?
1227.10 What are General Records Schedules (GRS)?
1227.12 When must agencies apply the GRS?
1227.14 How do I obtain copies of the GRS?

AUTHORITY: 44 U.S.C. 3303a(d).

SOURCE: 74 FR 51014, Oct. 2, 2009, unless otherwise noted.

§ 1227.1 What are the authorities for Part 1227?

The statutory authority for this part is 44 U.S.C. 3303a(d).

§ 1227.2 What definitions apply to this part?

See § 1220.18 of this subchapter for definitions of terms used in part 1227.

§ 1227.3 What standards are used as guidance for this part?

These regulations conform with guidance provided in ISO 15489–1:2001, Information and documentation—Records management, paragraphs 9.2 (Determining how long to retain records) and 9.9 (Implementing disposition).

§ 1227.10 What are General Records Schedules (GRS)?

General Records Schedules (GRS) are schedules issued by the Archivist of the United States that authorize, after specified periods of time, the destruction of temporary records or the transfer to the National Archives of the United States of permanent records that are common to several or all agencies.

§ 1227.12 When must agencies apply the GRS?

(a) Agencies apply the disposition instructions of the GRS, as provided in the following table.

When NARA issues a new or revised GRS, and . . .	Then . . .
(1) The new or revised GRS states that the provisions must be followed without exception.	All agencies must follow the disposition instructions of the GRS, regardless of whether or not they have existing schedules.
(2) Your agency does not have an existing schedule for these records..	Your agency must follow the disposition instructions of the GRS. If your agency's needs require a different retention period, then your agency must submit an SF 115 in accordance with 36 CFR part 1225 of this subchapter, and a justification for the deviation.
(3) When your agency has an existing schedule and the new or revised GRS permits use of existing agency-specific schedules.	Your agency may follow the disposition instructions in either the GRS or the existing agency schedule, but it must follow the same instructions throughout the agency and instruct its staff to do so. If your agency chooses to follow its own schedule, then it must notify NARA within 120 days of the issuance of the new or revised GRS.
(4) Your agency does not create or maintain any of the records addressed by that GRS.	No action is required.

(b) Except as provided in the table in paragraph (a), agencies must incorporate in their disposition manual or otherwise disseminate new and revised GRS within 6 months after NARA has issued the GRS Transmittal.

(c) NARA may, at its discretion, apply the provisions of the GRS to records in its legal custody, subject to the provisions of § 1235.34 of this subchapter.

§ 1227.14 How do I obtain copies of the GRS?

(a) The GRS and instructions for their use are available online at *http://www.archives.gov/records-mgmt/ardor/records-schedules.html*. They are also available by writing to the National Archives and Records Administration, Modern Records Programs (NWM), 8601 Adelphi Road, College Park, MD 20740–6001, phone number (301) 837–1738.

(b) NARA distributes new and revised GRS to Federal agencies under sequentially numbered GRS transmittals.

PART 1228—LOAN OF PERMANENT AND UNSCHEDULED RECORDS

Sec.
1228.1 What are the authorities for this part?
1228.2 What definitions apply to this part?
1228.8 Do loans of temporary records require NARA approval?
1228.10 When do loans of permanent and unscheduled records require NARA approval?
1228.12 How do agencies obtain approval to loan permanent or unscheduled records?
1228.14 How will NARA handle a loan request?
1228.16 When must agencies retrieve records that have been loaned?

AUTHORITY: 44 U.S.C. 2904.

SOURCE: 74 FR 51014, Oct. 2, 2009, unless otherwise noted.

§ 1228.1 What are the authorities for this part?

The statutory authority for this part is 44 U.S.C. 2904.

§ 1228.2 What definitions apply to this part?

See § 1220.18 of this subchapter for definitions of terms used in part 1228.

§ 1228.8 Do loans of temporary records require NARA approval?

Loans of temporary records between Federal agencies or to non-Federal recipients do not require approval from NARA. The lending agency is responsible for documenting the loan and return of the records.

§ 1228.10 When do loans of permanent and unscheduled records require NARA approval?

Loans of permanent or unscheduled records between Federal agencies or to non-Federal recipients require prior written approval from NARA. The loan of permanent or unscheduled records increases the likelihood of the records becoming lost, misplaced, or incorporated into other files. Agencies should consider reproducing or scanning the records in response to a loan request.

§ 1228.12 How do agencies obtain approval to loan permanent or unscheduled records?

(a) An agency proposing to loan permanent or unscheduled records must prepare a written loan agreement with the proposed recipient. The agreement must include:

(1) The name of the department or agency and subdivisions having custody of the records;

(2) The name and address of the proposed recipient of the records;

(3) A list containing:

(i) Identification of the records to be loaned, by series or system;

(ii) The inclusive dates for each series or system;

(iii) The volume and media of the records to be loaned; and

(iv) The NARA disposition job (SF 115) and item numbers covering the records, if any.

(4) A statement of the purpose and duration of the loan;

(5) A statement specifying any restrictions on the use of the records and how these restrictions will be imposed by the recipient;

(6) A certification that the records will be stored in areas with security and environmental controls equal to those specified in part 1234 of this subchapter; and

(7) A signature block for the Archivist of the United States. The loan must not take place until the Archivist has signed the agreement.

(b) On request, NARA may allow an agency to prepare an annual loan agreement covering multiple transfers from the same series of records to another single Federal agency.

(c) The agency must send a written request to the National Archives and Records Administration, Modern Records Programs (NWM), 8601 Adelphi Road, College Park, MD 20740–6001, phone number (301) 837–1738, transmitting the proposed loan agreement, citing the rationale for not providing copies in place of the original records, and specifying the name, title, and phone number of an agency contact. The request must be submitted or approved by the individual authorized to sign records schedules as described in § 1220.34(b) of this subchapter.

§ 1228.14 How will NARA handle a loan request?

(a) NARA will review the request and, if it is approved, return the signed agreement to the agency within 30 days.

(b) NARA will deny the request within 30 days if the records are due or past due to be transferred to the National Archives of the United States in accordance with part 1235 of this subchapter, if the loan would endanger the records, or if the loan would otherwise violate the regulations in 36 CFR chapter XII, subchapter B. NARA will notify the agency in writing if it disapproves the loan and the reasons for the disapproval of the loan.

§ 1228.16 When must agencies retrieve records that have been loaned?

An agency must contact the recipient of loaned permanent or unscheduled records 30 days prior to the expiration of the loan period (as stated in the loan agreement) to arrange for the return of the records. If the agency extends the duration of the loan, it must notify NARA (see § 1228.12(b)) in writing, specifying the reason for the extension and providing the new expiration date of the loan.

PART 1229—EMERGENCY AUTHORIZATION TO DESTROY RECORDS

Sec.

1229.1 What is the scope of this part?
1229.2 What are the authorities for this part?
1229.3 What definitions apply to this part?
1229.10 What steps must be taken when records are a continuing menace to health or life, or to property?
1229.12 What are the requirements during a state of war or threatened war?

AUTHORITY: 44 U.S.C. 3310 and 3311.

SOURCE: 74 FR 51014, Oct. 2, 2009, unless otherwise noted.

§ 1229.1 What is the scope of this part?

This part describes certain conditions under which records may be destroyed without regard to the provisions of part 1226 of this subchapter.

§ 1229.2 What are the authorities for this part?

The statutory authorities for this part are 44 U.S.C. 3310 and 3311.

§ 1229.3 What definitions apply to this part?

See § 1220.18 of this subchapter for definitions of terms used in part 1229.

§ 1229.10 What steps must be taken when records are a continuing menace to health or life, or to property?

When NARA and the agency that has custody of them jointly determine that records in the custody of an agency of the U.S. Government are a continuing menace to human health or life, or to property, NARA will authorize the agency to eliminate the menace immediately by any method necessary:

(a) When an agency identifies records that pose a continuing menace to human health or life, or to property, the records officer or other designee must immediately notify the National Archives and Records Administration, Modern Records Programs (NWM), 8601 Adelphi Road, College Park, MD 20740–6001, phone number (301) 837–1738. The notice must specify the description of the records, their location and quantity, and the nature of the menace. Notice may be given via e-mail to *RM.Communications@nara.gov*, or via phone, (301) 837–1738, or fax, (301) 837–3698, to NWM or the NARA Regional Administrator.

(b) If NARA concurs in a determination that the records must be destroyed, NARA will notify the agency to immediately destroy the records.

(c) If NARA does not concur that the menace must be eliminated by destruction of the records, NARA will advise the agency on remedial action to address the menace.

§ 1229.12 What are the requirements during a state of war or threatened war?

(a) Destruction of records outside the territorial limits of the continental United States is authorized whenever, during a state of war between the United States and any other nation or when hostile action appears imminent, the head of the agency that has custody of the records determines that

their retention would be prejudicial to the interest of the United States, or that they occupy space urgently needed for military purposes and are without sufficient administrative, fiscal, legal, historical, or other value to warrant their continued preservation.

(b) Within six months after the destruction of any records under this authorization, the agency official who directed the destruction must submit to the National Archives and Records Administration, Modern Records Programs (NWM), 8601 Adelphi Road, College Park, MD 20740–6001, phone number (301) 837–1738, a written statement explaining the reasons for the destruction and a description of the records and how, when, and where the destruction was accomplished.

PART 1230—UNLAWFUL OR ACCIDENTAL REMOVAL, DEFACING, ALTERATION, OR DESTRUCTION OF RECORDS

Sec.
1230.1 What are the authorities for part 1230?
1230.2 What standards are used as guidance for this part?
1230.3 What definitions apply to this part?
1230.10 Who is responsible for preventing the unlawful or accidental removal, defacing, alteration, or destruction of records?
1230.12 What are the penalties for unlawful or accidental removal, defacing, alteration, or destruction of records?
1230.14 How do agencies report incidents?
1230.16 How does NARA handle allegations of damage, alienation, or unauthorized destruction of records?
1230.18 What assistance is available to agencies to recover unlawfully removed records?

AUTHORITY: 44 U.S.C. 3105 and 3106.

SOURCE: 74 FR 51014, Oct. 2, 2009, unless otherwise noted.

§ 1230.1 What are the authorities for part 1230?

The statutory authorities for this part are 44 U.S.C. 3105 and 3106.

§ 1230.2 What standards are used as guidance for this part?

These regulations conform with guidance provided in ISO 15489–1:2001, par. 6.3 (Responsibilities), 7.2 (Characteristics of a record), 8.2 (Records systems characteristics), and 8.3 (Designing and implementing records systems).

§ 1230.3 What definitions apply to this part?

(a) See § 1220.18 of this subchapter for definitions of terms used throughout Subchapter B, including part 1230.

(b) As used in part 1230—

Alteration means the unauthorized annotation, addition, or deletion to a record.

Deface means to obliterate, mar, or spoil the appearance or surface of a record that impairs the usefulness or value of the record.

Removal means selling, donating, loaning, transferring, stealing, or otherwise allowing a record to leave the custody of a Federal agency without the permission of the Archivist of the United States.

Unlawful or accidental destruction (also called unauthorized destruction) means disposal of an unscheduled or permanent record; disposal prior to the end of the NARA-approved retention period of a temporary record (other than court-ordered disposal under § 1226.14(d) of this subchapter); and disposal of a record subject to a FOIA request, litigation hold, or any other hold requirement to retain the records.

§ 1230.10 Who is responsible for preventing the unlawful or accidental removal, defacing, alteration, or destruction of records?

The heads of Federal agencies must:

(a) Prevent the unlawful or accidental removal, defacing, alteration, or destruction of records. Section 1222.24(a)(6) of this subchapter prohibits removing records from the legal custody of the agency. Records must not be destroyed except under the provisions of NARA-approved agency records schedules or the General Records Schedules issued by NARA;

(b) Take adequate measures to inform all employees and contractors of the provisions of the law relating to unauthorized destruction, removal, alteration or defacement of records;

(c) Implement and disseminate policies and procedures to ensure that records are protected against unlawful

or accidental removal, defacing, alteration and destruction; and

(d) Direct that any unauthorized removal, defacing, alteration or destruction be reported to NARA.

§ 1230.12 What are the penalties for unlawful or accidental removal, defacing, alteration, or destruction of records?

The penalties for the unlawful or accidental removal, defacing, alteration, or destruction of Federal records or the attempt to do so, include a fine, imprisonment, or both (18 U.S.C. 641 and 2071).

§ 1230.14 How do agencies report incidents?

The agency must report promptly any unlawful or accidental removal, defacing, alteration, or destruction of records in the custody of that agency to the National Archives and Records Administration, Modern Records Programs (NWM), 8601 Adelphi Road, College Park, MD 20740–6001, phone number 301–837–1738.

(a) The report must include:

(1) A complete description of the records with volume and dates if known;

(2) The office maintaining the records;

(3) A statement of the exact circumstances surrounding the removal, defacing, alteration, or destruction of records;

(4) A statement of the safeguards established to prevent further loss of documentation; and

(5) When appropriate, details of the actions taken to salvage, retrieve, or reconstruct the records.

(b) The report must be submitted or approved by the individual authorized to sign records schedules as described in § 1220.34(b) of this subchapter.

§ 1230.16 How does NARA handle allegations of unlawful or accidental removal, defacing, alteration, or destruction?

Upon receiving any credible information that records are at risk of actual, impending, or threatened damage, alienation, or unauthorized destruction, NARA will contact the agency as follows:

(a) If the threat has not yet resulted in damage, removal, or destruction, NARA will contact the agency by phone promptly and follow up in writing within five business days.

(b) If records have allegedly been damaged, removed, or destroyed, NARA will notify the agency in writing promptly with a request for a response within 30 days.

§ 1230.18 What assistance is available to agencies to recover unlawfully removed records?

NARA will assist the head of the agency in the recovery of any unlawfully removed records, including contacting the Attorney General, if appropriate.

PART 1231—TRANSFER OF RECORDS FROM THE CUSTODY OF ONE EXECUTIVE AGENCY TO ANOTHER

Sec.

1231.1 What is the authority for part 1231?
1231.2 What definitions apply to this part?
1231.10 Who has the authority to approve the transfer of records from the custody of one executive agency to another?
1231.12 How do executive agencies request to transfer records to another executive agency?
1231.14 May the records of terminated agencies be transferred to another agency?
1231.16 What restrictions are there on use of transferred records?
1231.18 When are records transferred between executive agencies without NARA approval?

AUTHORITY: 44 U.S.C. 2908.

SOURCE: 74 FR 51014, Oct. 2, 2009, unless otherwise noted.

§ 1231.1 What is the authority for part 1231?

The authority for this part is 44 U.S.C. 2908.

§ 1231.2 What definitions apply to this part?

See § 1220.18 of this subchapter for definitions of terms used throughout Subchapter B, including this part.

§ 1231.10 Who has the authority to approve the transfer of records from the custody of one executive agency to another?

NARA must approve in writing the transfer of records from the custody of one executive agency to another, except as provided in § 1231.18(a).

§ 1231.12 How do executive agencies request to transfer records to another executive agency?

An executive agency that proposes to transfer records to another agency must request approval of the transfer of records in writing from the National Archives and Records Administration, Modern Records Programs (NWM), 8601 Adelphi Road, College Park, MD 20740–6001, phone number (301) 837–1738. The request must include:

(a) A concise description of the records to be transferred, including the volume in cubic feet;

(b) A statement of the restrictions imposed on the use of records;

(c) A statement of the agencies and persons using the records and the purpose of this use;

(d) A statement of the current and proposed physical and organizational locations of the records;

(e) A justification for the transfer including an explanation of why it is in the best interests of the Government; and

(f) Copies of the concurrence in the transfer by the heads of all agencies involved in the proposed transfer.

§ 1231.14 May the records of terminated agencies be transferred to another agency?

The records of executive agencies whose functions are terminated or are in process of liquidation may be transferred to another executive agency that inherits the function. All such transfers must be made in accordance with the provisions of this part.

§ 1231.16 What restrictions are there on use of transferred records?

Restrictions imposed under a statute or Executive order must continue to be imposed after the transfer. Restrictions imposed by agency determination must also continue, unless the restrictions are removed by agreement between the agencies concerned.

§ 1231.18 When are records transferred between executive agencies without NARA approval?

Records are transferred between executive agencies without NARA approval when:

(a) Records are transferred to a NARA or agency-operated records center or to the National Archives of the United States in accordance with Parts 1232, 1233, and 1235 of this subchapter;

(b) Temporary records are loaned for official use;

(c) The transfer of records or functions or both is required by statute, Executive Order, Presidential reorganization plan, or Treaty, or by specific determinations made thereunder;

(d) The records are transferred between two components of the same executive department; or

(e) Records accessioned into the National Archives of the United States are later found to lack sufficient value for continued retention in the National Archives. The disposition of such records is governed by § 1235.34 of this subchapter.

PART 1232—TRANSFER OF RECORDS TO RECORDS STORAGE FACILITIES

Sec.

1232.1 What are the authorities for part 1232?
1232.2 What definitions apply to this part?
1232.3 What standards are used as guidance for this part?
1232.10 Where can a Federal agency transfer records for storage?
1232.12 Under what conditions may Federal records be stored in records storage facilities?
1232.14 What requirements must an agency meet before it transfers records to a records storage facility?
1232.16 What documentation must an agency create before it transfers records to a records storage facility?
1232.18 What procedures must an agency follow to transfer records to an agency records center or commercial records storage facility?

AUTHORITY: 44 U.S.C. 2907 and 3103.

SOURCE: 74 FR 51014, Oct. 2, 2009, unless otherwise noted.

§ 1232.1 What are the authorities for part 1232?

The statutory authorities for this part are 44 U.S.C. 2907 and 3103.

§ 1232.2 What definitions apply to this part?

See § 1220.18 of this subchapter for definitions of terms used throughout Subchapter B, including part 1232.

§ 1232.3 What standards are used as guidance for this part?

These regulations conform with guidance provided in ISO 15489–1:2001 Paragraphs 7.1 (Principles of records management programmes), 8.3.3 (Physical storage medium and protection), 8.3.6 (Access, retrieval and use), 8.3.7 (Retention and disposition), 9.6 (Storage and handling), and 9.8.3 (Location and tracking) apply to records creation and maintenance.

§ 1232.10 Where can a Federal agency transfer records for storage?

Federal agencies may store records in the following types of records storage facilities, so long as the facilities meet the facility standards in 36 CFR part 1234. Records transferred to a records storage facility remain in the legal custody of the agency.

(a) NARA Federal Records Centers. NARA owns or operates records centers for the storage, processing, and servicing of records for Federal agencies under the authority of 44 U.S.C. 2907. These NARA records centers include a National Personnel Records Center that contains designated records of the Department of Defense and the Office of Personnel Management and other designated records pertaining to former Federal civilian employees. A list of NARA Federal Records Centers is available from the NARA Web site at *http://www.archives.gov/locations/index.html* and also in the U.S. Government Manual, which is for sale from the Superintendent of Documents, U.S. Government Printing Office, Mail Stop: SSOP, Washington, DC 20402–9328, and is available on the Internet from *http://www.access.gpo.gov/nara/index.html*.

(b) Records centers operated by or on behalf of one or more Federal agencies other than NARA.

(c) Commercial records storage facilities operated by private entities.

§ 1232.12 Under what conditions may Federal records be stored in records storage facilities?

The following chart shows what records can be stored in a records storage facility and the conditions that apply:

Type of record	Conditions
(a) Permanent records	Any storage facility that meets the provisions of 36 CFR part 1234.
(b) Unscheduled records	(1) Any storage facility that meets the provisions of 36 CFR part 1234. (2) Also requires prior notification to NARA (see § 1232.14(b)).
(c) Temporary records (excluding Civilian Personnel Records).	Any storage facility that meets the provisions of 36 CFR part 1234.
(d) Vital records	Storage facility must meet the provisions of 36 CFR parts 1223 and 1234.
(e) Civilian Personnel Records	May only be transferred to the National Personnel Records Center (NPRC), St. Louis, MO (see part 1233 of this subchapter).

§ 1232.14 What requirements must an agency meet before it transfers records to a records storage facility?

An agency must meet the following requirements before it transfers records to a records storage facility:

(a) Ensure that the requirements of 36 CFR part 1234 are met. Special attention must be paid to ensuring appropriate storage conditions for records on non-paper based media (e.g., film, audio tape, magnetic tape), especially those that are scheduled for long-term or permanent retention, as those records typically require more stringent environmental controls (see 36 CFR parts 1236 and 1237).

(b) To transfer unscheduled records, notify the National Archives and Records Administration, Modern Records Programs (NWM), 8601 Adelphi Road, College Park, MD 20740–6001, phone number (301) 837–1738, in writing prior to the transfer. The notification

must identify the records storage facility and include a copy of the information required by § 1232.16(a).

(c) For all records being transferred, create documentation sufficient to identify and locate files. (See § 1232.16.)

(d) Ensure that NARA-approved retention periods are implemented properly and that records documenting final disposition actions (destruction or transfer to the National Archives of the United States) are created and maintained.

§ 1232.16 What documentation must an agency create before it transfers records to a records storage facility?

(a) Documentation must include for each individual records series spanning one or more consecutive years transferred to storage:

(1) Creating office;

(2) Series title;

(3) Description (in the case of permanent or unscheduled records, the description must include a folder title list of the box contents or equivalent detailed records description);

(4) Date span;

(5) Physical form and medium of records (e.g., paper, motion picture film, sound recordings, photographs, or digital images);

(6) Volume;

(7) Citation to NARA-approved records schedule or agency records disposition manual (unscheduled records must cite the date the agency notified NARA or, if available, the date the SF 115 was submitted to NARA);

(8) Restrictions on access if applicable;

(9) Disposition (''permanent,'' ''temporary,'' or ''unscheduled; SF 115 pending'');

(10) Date of disposition action (transfer to the National Archives of the United States or destruction);

(11) Physical location, including name and address of facility; and

(12) Control number or identifier used to track records.

(b) In the case of permanent and unscheduled records, provide copies of such documentation to NARA and advise NARA in writing of the new location whenever the records are moved to a new storage facility. For permanent records, the agency must transmit this documentation to the National Archives and Records Administration, Modern Records Programs (NWM), 8601 Adelphi Road, College Park, MD 20740–6001, phone number (301) 837–1738, no later than 30 days after records are transferred to the agency records center or commercial records storage facility.

(1) Retain temporary records until the expiration of their NARA-approved retention period and no longer, except as provided for in § 1226.18 of this subchapter.

(2) Transfer permanent records to the National Archives of the United States in accordance with 36 CFR part 1235.

§ 1232.18 What procedures must an agency follow to transfer records to an agency records center or commercial records storage facility?

Federal agencies must use the following procedures to transfer records to an agency records center or commercial records storage facility:

(a) Agreements with agency records centers or contracts with commercial records storage facilities must incorporate the standards in 36 CFR part 1234 and allow for inspections by the agency and NARA to ensure compliance. An agency must remove records promptly from a facility if deficiencies identified during an inspection are not corrected within six months of issuance of the report.

(b) For temporary records, the agency must make available to NARA on request the documentation specified in § 1232.16.

(c) Retain temporary records until the expiration of their NARA-approved retention period and no longer, except as provided for in § 1226.18 of this subchapter.

(d) Ensure that NARA-approved retention periods are implemented properly and that records documenting final disposition actions (destruction or transfer to the National Archives of the United States) are created and maintained as required by 36 CFR 1232.14.

(1) Agencies must establish procedures that ensure that temporary records are destroyed in accordance with NARA-approved records schedules and that NARA-approved changes to

schedules, including the General Records Schedules, are applied to records in agency records centers or commercial records storage facilities in a timely fashion. Procedures must include a requirement that the agency records center or commercial records storage facility notify agency records managers or the creating office before the disposal of temporary records unless disposal of temporary records is initiated by the agency.

(2) Move temporary records that are subsequently reappraised as permanent to a facility that meets the environmental control requirements for permanent records in § 1234.14 of this subchapter within one year of their re-appraisal, if not already in such a facility. (Paper-based permanent records in an existing records storage facility that does not meet the environmental control requirements in § 1234.14 of this subchapter on October 1, 2009, must be moved from that facility no later than February 28, 2010.)

(3) Agencies must establish procedures to ensure that the agency records centers or commercial records storage facilities transfer permanent records to the National Archives of the United States as individual series spanning one or more years and in accordance with the provisions of part 1235 of this subchapter.

(e) Agencies must ensure that records that are restricted because they are security classified or exempt from disclosure by statute, including the Privacy Act of 1974 (5 U.S.C. 552a, as amended), or regulation are stored and maintained in accordance with applicable laws, Executive orders, or regulations.

(f) Agencies must ensure that temporary records, including restricted records (security classified or exempted from disclosure by statute, including the Privacy Act of 1974, or regulation), are destroyed in accordance with the requirements specified in § 1226.24 of this subchapter.

(g) Agencies must ensure that emergency operating vital records, as defined in 36 CFR part 1223, that are transferred to an agency records center or commercial records storage facility are available in accordance with 36 CFR 1223.24.

(h) Provide access to appropriate NARA staff to records wherever they are located in order to conduct an inspection in accordance with 36 CFR part 1239 or to process a request for records disposition authority.

PART 1233—TRANSFER, USE, AND DISPOSITION OF RECORDS IN A NARA FEDERAL RECORDS CENTER

Sec.

1233.1 What are the authorities for part 1233?
1233.2 What definitions apply to this part?
1233.3 What standards are used as guidance for this part?
1233.10 How does an agency transfer records to a NARA Federal Records Center?
1233.12 How does an agency transfer vital records to a NARA Federal Records Center?
1233.14 What personnel records must be transferred to the National Personnel Records (NPRC)?
1233.16 How does an agency transfer records to the National Personnel Records Center (NPRC)?
1233.18 What reference procedures are used in NARA Federal Records Centers?
1233.20 How are disposal clearances managed for records in NARA Federal Records Centers?

AUTHORITY: 44 U.S.C. 2907 and 3103.

SOURCE: 74 FR 51014, Oct. 2, 2009, unless otherwise noted.

§ 1233.1 What are the authorities for part 1233?

The statutory authorities for this part are 44 U.S.C. 2907 and 3103.

§ 1233.2 What definitions apply to this part?

See § 1220.18 of this subchapter for definitions of terms used throughout Subchapter B, including part 1233.

§ 1233.3 What standards are used as guidance for this part?

These regulations conform with guidance provided in ISO 15489–1:2001. Paragraphs 7.1 (Principles of records management programmes), 8.3.3 (Physical storage medium and protection), 8.3.6 (Access, retrieval and use), 8.3.7 (Retention and disposition), 9.6 (Storage and handling), and 9.8.3 (Location and tracking) apply to records creation and maintenance.

§ 1233.10 How does an agency transfer records to a NARA Federal Records Center?

An agency transfers records to a NARA Federal Records Center using the following procedures:

(a) General. NARA will ensure that its records centers meet the facilities standards in 36 CFR part 1234, which meets the agency's obligation in § 1232.14(a) of this subchapter.

(b) Agencies must use their designated NARA Federal Records Center(s) as specified in their agency agreement with NARA (Federal Records Center Program (FRCP)) for the storage of records.

(c) Transfers to NARA Federal Records Centers must be preceded by the submission of a Standard Form (SF) 135, Records Transmittal and Receipt, or an electronic equivalent. Preparation and submission of this form will meet the requirements for records description provided in § 1232.14(c) of this subchapter, except the folder title list required for permanent and unscheduled records. A folder title list is also required for records that are scheduled for sampling or selection after transfer.

(d) A separate SF 135 or electronic equivalent is required for each individual records series having the same disposition authority and disposition date.

(e) For further guidance on transfer of records to a NARA Federal Records Center, consult the NARA Federal Records Centers Program Web site (*http://www.archives.gov/frc/toolkit.html#transfer*), or current NARA publications and bulletins by contacting the National Archives and Records Administration, Office of Regional Records Services (NR), 8601 Adelphi Road, College Park, MD or phone (301) 837–2950, or individual NARA Federal Records Centers *http://www.archives.gov/frc/locations.html*.

§ 1233.12 How does an agency transfer vital records to a NARA Federal Records Center?

For assistance on selecting an appropriate site among NARA facilities for storage of vital records, agencies may contact National Archives and Records Administration, Office of Regional Records Services, 8601 Adelphi Road, College Park, MD or phone (301) 837–2950. The actual transfers are governed by the general requirements and procedures in this part and 36 CFR part 1223.

§ 1233.14 What personnel records must be transferred to the National Personnel Records Center (NPRC)?

(a) Civilian personnel files:

(1) General Records Schedules 1 and 2 specify that certain Federal civilian personnel, medical, and pay records must be centrally stored at the National Personnel Records Center headquartered in St. Louis, MO.

(2) [Reserved]

(b) The following types of medical treatment records are transferred to the NPRC:

(1) Inpatient (hospitalization) records created for all categories of patients (active duty personnel, retirees, and dependents) receiving inpatient treatment and extended ambulatory procedures; and

(2) Outpatient medical treatment records for military retirees, dependents, and other civilians treated at military health care facilities (excludes active duty military personnel at time of military discharge or retirement).

§ 1233.16 How does an agency transfer records to the National Personnel Records Center (NPRC)?

Agencies must use the following procedures when transferring records to the NPRC:

(a) *Civilian personnel files*. (1) Forward the official personnel folder (OPF) and the employee medical folder (EMF) to the NPRC at the same time.

(2) Transfer EMFs and OPFs in separate folders.

(3) Retirement of individual folders is based on the date of separation and should occur within 90 to 120 days after the employee separates from Federal service.

(4) For additional guidance, consult the Office of Personnel Management (OPM) 1900 E Street, NW., Washington, DC 20415, phone number (202) 606–1800, Web site *http://www.opm.gov/feddata/recguide2008.pdf*, for the OPM publication ''The Guide to Personnel Recordkeeping'' for procedures on the transfer of OPFs and EMFs.

(b) *Military medical records.* Military health care facilities should contact their facility records managers for guidance on transferring medical records to NPRC. For additional guidance, consult the ''Transactions with the National Personnel Records Center (NPRC), St. Louis, MO'' section of the NARA Federal Records Centers Program Web site (*http://www.archives.gov/frc/toolkit.html#transactions*).

(c) *Other guidance assistance.* For further guidance assistance consult the NPRC Web site (*http://www.archives.gov/facilities/mo/st_louis.html*).

§ 1233.18 What reference procedures are used in NARA Federal Records Centers?

(a) Agency records transferred to a NARA Federal Records Center remain in the legal custody of the agency. NARA acts as the agency's agent in maintaining the records. NARA will not disclose the record except to the agency that maintains the record, or under rules established by that agency which are consistent with existing laws.

(b) For general reference requests agencies may use an FRCP electronic system or, the Optional Form (OF) 11, Reference Request—Federal Records Centers, a form jointly designated by that agency and NARA, or their electronic equivalents.

(c) For civilian personnel records, agencies must use the following forms:

(1) Standard Form 127, Request for Official Personnel Folder (Separated Employee), to request transmission of personnel folders of separated employees stored at the National Personnel Records Center. Additional instructions on requesting OPFs are available online at *http://www.archives.gov/st-louis/civilian-personnel/federal-agencies.html*.

(2) Standard Form 184, Request for Employee Medical Folder (Separated Employee), to request medical folders stored at the National Personnel Records Center. Additional instructions on requesting EMFs are available online at *http://www.archives.gov/st-louis/civilian-personnel/federal-agencies.html*.

(3) Optional Form 11, Reference Request—Federal Records Center to request medical records transferred to other NARA Federal Records Centers prior to September 1, 1984. The request must include the name and address of the agency's designated medical records manager

(d) For military personnel records reference requests, the following forms must be used:

(1) Federal agencies must use Standard Form (SF) 180, Request Pertaining to Military Records, to obtain information from military service records in the National Personnel Records Center (Military Personnel Records); authorized agencies requesting the loan of a military personnel record may order records using eMilrecs (electronic equivalent of the SF 180). Access to eMilrecs and additional information is available on line at: *http://www.archives.gov/st-louis/military-personnel/agencies/ompf-fed-agency.html*.

(2) A military veteran or the next of kin of a deceased, former member of the military may order military personnel records through the submission of an SF 180 or an online records request system. Additional information is available on line at: *http://www.archives.gov/veterans/evetrecs*.

(3) Members of the public and nongovernmental organizations also may obtain copies of SF 180 by submitting a written request to the National Personnel Records Center (Military Personnel Records), 9700 Page Boulevard, St. Louis, MO 63132. OMB Control Number 3095–0029 has been assigned to the SF 180.

(4) Agencies may furnish copies of the SF 180 to the public to aid in inquiries. Copies of SF 180 are available at: *http://www.archives.gov/st-louis/military-personnel/standard-form-180.html#sf*.

(5) For guidance on requesting original medical treatment records, military hospitals and clinics should consult the ''Transactions with the National Personnel Records Center (NPRC), St. Louis, MO'' section of the NARA Federal Records Centers Program Web site (*http://www.archives.gov/frc/toolkit.html#transactions*).

(e) For further guidance on requesting records from a NARA Federal Records Center, consult the NARA Federal Records Centers Program Web

site (*http://www.archives.gov/frc/toolkit.html#retrieval*), or current NARA publications and bulletins by contacting the Office of Regional Records Services (NR), or individual NARA Federal Records Centers (*http://www.archives.gov/frc/locations.html*), or the Washington National Records Center (NWMW).

§ 1233.20 How are disposal clearances managed for records in NARA Federal Records Centers?

(a) The National Personnel Records Center will destroy records covered by General Records Schedules 1 and 2 in accordance with those schedules without further agency clearance.

(b) NARA Federal Records Centers will destroy other eligible Federal records only with the written concurrence of the agency having legal custody of the records.

(c) NARA Federal Records Centers will maintain documentation on the final disposition of records, as required in 36 CFR 1232.14(d).

(d) When NARA approves an extension of retention period beyond the time authorized in the records schedule for records stored in NARA Federal Records Centers, NARA will notify those affected records centers to suspend disposal of the records (see § 1226.18 of this subchapter).

(e) For further guidance on records disposition, consult the NARA Federal Records Centers Program Web site (*http://www.archives.gov/frc/toolkit.html#disposition*), or current NARA publications and bulletins by contacting the Office of Regional Records Services (NR) or individual NARA Federal Records Centers (*http://www.archives.gov/frc/locations.html*), individual NARA regional facilities, or the Washington National Records Center (NWMW).

PART 1234—FACILITY STANDARDS FOR RECORDS STORAGE FACILITIES

Subpart A—General

Sec.
1234.1 What authorities apply to part 1234?
1234.2 What does this part cover?
1234.3 What publications are incorporated by reference?
1234.4 What definitions are used in this part?

Subpart B—Facility Standards

1234.10 What are the facility requirements for all records storage facilities?
1234.12 What are the fire safety requirements that apply to records storage facilities?
1234.14 What are the requirements for environmental controls for records storage facilities?

Subpart C—Handling Deviations From NARA's Facility Standards

1234. 20 What rules apply if there is a conflict between NARA standards and other regulatory standards that a facility must follow?
1234. 22 How does an agency request a waiver from a requirement in this subpart?
1234. 24 How does NARA process a waiver request?

Subpart D—Facility Approval and Inspection Requirements

1234.30 How does an agency request authority to establish or relocate records storage facilities?
1234.32 What does an agency have to do to certify a fire-safety detection and suppression system?
1234.34 When may NARA conduct an inspection of a records storage facility?
APPENDIX A TO PART 1234—MINIMUM SECURITY STANDARDS FOR LEVEL III FEDERAL FACILITIES
APPENDIX B TO PART 1234—ALTERNATIVE CERTIFIED FIRE-SAFETY DETECTION AND SUPPRESSION SYSTEM(S)

AUTHORITY: 44 U.S.C. 2104(a), 2904, 2907, 3102, and 3103.

SOURCE: 74 FR 51014, Oct. 2, 2009, unless otherwise noted.

Subpart A—General

§ 1234.1 What authorities apply to part 1234?

NARA is authorized to establish, maintain and operate records centers for Federal agencies under 44 U.S.C. 2907. NARA is authorized, under 44 U.S.C. 3103, to approve a records center that is maintained and operated by an agency. NARA is also authorized to promulgate standards, procedures, and guidelines to Federal agencies with respect to the storage of their records in commercial records storage facilities. See 44 U.S.C. 2104(a), 2904, and 3102. The

regulations in this subpart apply to all records storage facilities Federal agencies use to store, service, and dispose of their records.

§ 1234.2 What does this part cover?

(a) This part covers the establishment, maintenance, and operation of records centers, whether Federally-owned and operated by NARA or another Federal agency, or Federally-owned and contractor operated. This part also covers an agency's use of commercial records storage facilities. Records centers and commercial records storage facilities are referred to collectively as records storage facilities. This part specifies the minimum structural, environmental, property, and life-safety standards that a records storage facility must meet when the facility is used for the storage of Federal records.

(b) Except where specifically noted, this part applies to all records storage facilities. Certain noted provisions apply only to new records storage facilities established or placed in service on or after September 28, 2005.

§ 1234.3 What publications are incorporated by reference in this part?

(a) Certain material is incorporated by reference into this part with the approval of the Director of the Federal Register under 5 U.S.C. 552(a) and 1 CFR part 51. To enforce any edition other than that specified in this section, NARA must publish notice of change in the FEDERAL REGISTER and the material must be available to the public. All approved material is available for inspection at the Office of the Federal Register. For information on the availability of this material at the Office of the Federal Register, call 202–741–6030 or go to *http://www.archives.gov/federal_register/code_of_federal_regulations/ibr_locations.html*.

(b) The material incorporated by reference is also available for inspection at NARA's Archives Library Information Center (NWCCA), Room 2380, 8601 Adelphi Road, College Park, MD 20740–6001, phone number (301) 837–3415, and is available for purchase from the sources listed below. If you experience difficulty obtaining the standards referenced below, contact NARA's Space and Security Management Division (NAS), National Archives and Records Administration, 8601 Adelphi Road, College Park, MD 20740–6001, phone number (301) 837–1867.

(c) *American National Standards Institute (ANSI)*. The following standards are available from the American National Standards Institute, 25 West 43rd St., 4th Floor, New York, NY 10036, phone number (212) 642–4900, or online at *http://webstore.ansi.org*.

(1) IAPMO/ANSI UMC 1–2003 (''IAPMO/ANSI UMC 1''), Uniform Mechanical Code, 2003, IBR approved for § 1234.12.

(2) NFPA 40 (''NFPA 40–1997''), Standard for the Storage and Handling of Cellulose Nitrate Motion Picture Film, 1997 Edition, IBR approved for § 1234.12.

(3) NFPA 42 (''NFPA 42''), Code for the Storage of Pyroxylin Plastic, 1997 Edition, IBR approved for § 1234.12.

(4) NFPA 54 (''NFPA 54''), National Fuel Gas Code, 2002 Edition, IBR approved for § 1234.12.

(5) NFPA 101 (''NFPA 101''), Life Safety Code, 1997 Edition, IBR approved for § 1234.12.

(d) *Document Center Inc*. The following standards are available from the standards reseller the Document Center Inc., 111 Industrial Road, Suite 9, Belmont, CA, 94002, phone number (650) 591–7600, or online at *http://www.document-center.com*.

(1) ANSI/NAPM IT9.18–1996 (''ANSI/NAPM IT9.18''), Imaging Materials—Processed Photographic Plates—Storage Practices, September 8, 1996, IBR approved for § 1234.14.

(2) ANSI/NAPM IT9.23–1996 (''ANSI/NAPM IT9.23''), Imaging Materials—Polyester Base Magnetic Tape—Storage, September 6, 1996, IBR approved for § 1234.14.

(e) *Document Engineering Co., Inc. (DECO)*. The following standards are available from the standards reseller DECO—Document Engineering Co., Inc., 15210 Stagg Street, Van Nuys, CA, phone number (818) 782–1010, or online at *http://www.doceng.com*.

(1) ANSI/NAPM IT9.20–1996 (''ANSI/NAPM IT9.20''), Imaging Materials—Reflection Prints—Storage Practices, September 8, 1996, IBR approved for § 1234.14.

(2) NFPA 221 (''NFPA 221''), Standard for Fire Walls and Fire Barrier Walls, 1994 Edition, November 1, 1994, IBR approved for § 1234.4.

(3) ASTM E 119–98 (''ASTM E 119–98''), Standard Test Methods for Fire Tests of Building Construction and Materials, 1998, IBR approved for § 1234.12.

(4) NFPA 10 (''NFPA 10''), Portable Fire Extinguishers, 1994 Edition, November 1, 1994, IBR approved for Appendix B to part 1234.

(5) NFPA 13 (''NFPA 13''), Standard for Installation of Sprinkler Systems, 2002 Edition, October 1, 2002, IBR approved for §§ 1234.10 and 1234.12, and Appendix B to part 1234.

(6) NFPA 20 (''NFPA 20''), Standard for the Installation of Centrifugal Fire Pumps, 1996 Edition, January 1, 1996, IBR approved for Appendix B to part 1234.

(f) *Global Engineering Documents*. The following standards are available from the standards reseller Global Engineering Documents, 15 Inverness Way, East Englewood, CO 80112, phone number (800) 854–7179, or online at *http://www.global.ihs.com*.

(1) ANSI/PIMA IT9.25–1998 (''ANSI/PIMA IT9.25''), Imaging Materials—Optical Disc Media—Storage, 1998, IBR approved for § 1234.14.

(2) Reserved.

(g) *Techstreet*. The following standards are available from the standards reseller Techstreet, 3916 Ranchero Drive, Ann Arbor, MI 48108, phone number (800) 699–9277, or online at *http://www.Techstreet.com*.

(1) ANSI/PIMA IT9.11–1998 (''ANSI/PIMA IT9.11''), Imaging Materials—Processed Safety Photographic Films—Storage, January 1, 1998, IBR approved for § 1234.14.

(2) UL 827 (''UL 827''), Central-Station Alarm Services, Sixth Edition, April 23, 1999, IBR approved for Appendix B to part 1234.

(3) UL 1076 (''UL 1076''), Proprietary Burglar Alarm Units and Systems, Fifth Edition, February 1, 1999, IBR approved for § 1234.10

(h) The following standards are not available from the original publisher or a standards reseller. As indicated in paragraph (b) of this section, the standards are available for inspection at the NWCCA. In order to inspect the standards at a NARA location other than the NARA facility in College Park, MD, please contact the NWCCA, Room 2380, 8601 Adelphi Road, College Park, MD 20740–6001, phone number (301) 837–3415 or e-mail your request to *alic@nara.gov*.

(1) ANSI/ASHRAE 55–1992 (''ANSI/ASHRAE 55''), Thermal Environmental Conditions for Human Occupancy, 1992, IBR approved for § 1234.14.

(2) ANSI/ASHRAE 62–1989 (''ANSI/ASHRAE 62''), Ventilation for Acceptable Indoor Air Quality, 1989, IBR approved for § 1234.14.

(3) UL 611 (''UL 611''), Central-Station Burglar-Alarm Systems, February 22, 1996, IBR approved for § 1234.10

§ 1234.4 What definitions are used in this part?

The following definitions apply to this part:

Auxiliary spaces mean non-records storage areas such as offices, research rooms, other work and general storage areas but excluding boiler rooms or rooms containing equipment operating with a fuel supply such as generator rooms.

Commercial records storage facility has the meaning specified in § 1220.18 of this chapter.

Existing records storage facility means any records center or commercial records storage facility used to store records on September 27, 2005, and that has stored records continuously since that date.

Fire barrier wall means a wall, other than a fire wall, having a fire resistance rating, constructed in accordance with NFPA 221 (incorporated by reference, see § 1234.3).

Licensed fire protection engineer means a licensed or registered professional engineer with a recognized specialization in fire protection engineering. For those States that do not separately license or register fire protection engineers, a licensed or registered professional engineer with training and experience in fire protection engineering, operating within the scope of that licensing or registration, who is also a professional member of the Society of Fire Protection Engineers.

Must and provide means that a provision is mandatory.

New records storage facility means any records center or commercial records storage facility established or converted for use as a records center or commercial records storage facility on or after September 28, 2005.

Permanent record has the meaning specified in § 1220.18 of this subchapter.

Records center has the meaning specified in § 1220.18 of this subchapter.

Records storage area means the area intended for long-term storage of records that is enclosed by four fire barrier walls, the floor, and the ceiling.

Records storage facility has the meaning specified in § 1220.18 of this subchapter.

Sample/Select records means records whose final disposition requires an analytical or statistical sampling prior to final disposition authorization, in which some percentage of the original accession will be retained as permanent records.

Should or may means that a provision is recommended or advised but not required.

Temporary record has the meaning specified in § 1220.18 of this subchapter.

Unscheduled records has the meaning specified in § 1220.18 of this subchapter.

Subpart B—Facility Standards

§ 1234.10 What are the facility requirements for all records storage facilities?

(a) The facility must be constructed with non-combustible materials and building elements, including walls, columns and floors. There are two exceptions to this requirement:

(1) Roof elements may be constructed with combustible materials if installed in accordance with local building codes and if roof elements are protected by a properly installed, properly maintained wet-pipe automatic sprinkler system, as specified in NFPA 13 (incorporated by reference, see § 1234.3).

(2) An agency may request a waiver of the requirement specified in paragraph (a) from NARA for an existing records storage facility with combustible building elements to continue to operate until October 1, 2009. In its request for a waiver, the agency must provide documentation that the facility has a fire suppression system specifically designed to mitigate this hazard and that the system meets the requirements of § 1234.12(s). Requests must be submitted to the Director, Space and Security Management Division (NAS), National Archives and Records Administration, 8601 Adelphi Road, College Park, MD 20740–6001, phone number (301) 837–1867.

(b) A facility with two or more stories must be designed or reviewed by a licensed fire protection engineer and civil/structural engineer to avoid catastrophic failure of the structure due to an uncontrolled fire on one of the intermediate floor levels. For new buildings the seals on the construction drawings serve as proof of this review. For existing buildings, this requirement may be demonstrated by a professional letter of opinion under seal by a licensed fire protection engineer that the fire resistance of the separating floor(s) is/(are) at least four hours, and a professional letter of opinion under seal by a licensed civil/structural engineer that there are no obvious structural weaknesses that would indicate a high potential for structural catastrophic collapse under fire conditions.

(c) The building must be sited a minimum of five feet above and 100 feet from any 100 year flood plain areas, or be protected by an appropriate flood wall that conforms to local or regional building codes.

(d) The facility must be designed in accordance with the applicable national, regional, state, or local building codes (whichever is most stringent) to provide protection from building collapse or failure of essential equipment from earthquake hazards, tornadoes, hurricanes and other potential natural disasters.

(e) Roads, fire lanes and parking areas must permit unrestricted access for emergency vehicles.

(f) A floor load limit must be established for the records storage area by a licensed structural engineer. The limit must take into consideration the height and type of the shelving or storage equipment, the width of the aisles, the configuration of the space, etc. The allowable load limit must be posted in a conspicuous place and must not be exceeded.

(g) The facility must ensure that the roof membrane does not permit water to penetrate the roof. NARA strongly recommends that this requirement be met by not mounting equipment on the roof and placing nothing else on the roof that may cause damage to the roof membrane. Alternatively, a facility may meet this requirement with stringent design specifications for roof-mounted equipment in conjunction with a periodic roof inspection program performed by appropriately certified professionals.

(1) New records storage facilities must meet the requirements in this paragraph (g) beginning on September 28, 2005.

(2) Existing facilities must meet the requirements in this paragraph (g) no later than October 1, 2009.

(h) Piping (with the exception of fire protection sprinkler piping and storm water roof drainage piping) must not be run through records storage areas unless supplemental measures such as gutters or shields are used to prevent water leaks and the piping assembly is inspected for potential leaks regularly. If drainage piping from roof drains must be run though records storage areas, the piping must be run to the nearest vertical riser and must include a continuous gutter sized and installed beneath the lateral runs to prevent leakage into the storage area. Vertical pipe risers required to be installed in records storage areas must be fully enclosed by shaft construction with appropriate maintenance access panels.

(1) New records storage facilities must meet the requirements in this paragraph (h) beginning on September 28, 2005.

(2) Existing facilities must meet the requirements in this paragraph (h) no later than October 1, 2009.

(i) The following standards apply to records storage shelving and racking systems:

(1) All storage shelving and racking systems must be designed and installed to provide seismic bracing that meets the requirements of the applicable state, regional, and local building code (whichever is most stringent);

(2) Racking systems, steel shelving, or other open-shelf records storage equipment must be braced to prevent collapse under full load. Each racking system or shelving unit must be industrial style shelving rated at least 50 pounds per cubic foot supported by the shelf;

(3) Compact mobile shelving systems (if used) must be designed to permit proper air circulation and fire protection (detailed specifications that meet this requirement can be provided by NARA by writing to Director, Space and Security Management Division (NAS), National Archives and Records Administration, 8601 Adelphi Road, College Park, MD 20740–6001.), phone number (301) 837–1867).

(j) The area occupied by the records storage facility must be equipped with an anti-intrusion alarm system, or equivalent, meeting the requirements of UL 1076 (incorporated by reference, see §1234.3), level AA, to protect against unlawful entry after hours and to monitor designated interior storage spaces. This intrusion alarm system must be monitored in accordance with UL 611, (incorporated by reference, see §1234.3).

(k) The facility must comply with the requirements for a Level III facility as defined in the Department of Justice, U. S. Marshals Service report Vulnerability Assessment of Federal Facilities dated June 28, 1995. These requirements are provided in Appendix A to this part 1234. Agencies may require compliance with Level IV or Level V facility security requirements if the facility is classified at the higher level.

(l) Records contaminated by hazardous materials, such as radioactive isotopes or toxins, infiltrated by insects, or exhibiting active mold growth must be stored in separate areas having separate air handling systems from other records.

(m) To eliminate damage to records and/or loss of information due to insects, rodents, mold and other pests that are attracted to organic materials under specific environmental conditions, the facility must have an Integrated Pest Management program as defined in the Food Protection Act of 1996 (Section 303, Pub. L. 104–170, 110 Stat. 1512). This states in part that Integrated Pest Management is a sustainable approach to managing pests by combining biological, cultural,

physical, and chemical tools in a way that minimizes economic, health, and environmental risks. The IPM program emphasizes three fundamental elements:

(1) *Prevention*. IPM is a preventive maintenance process that seeks to identify and eliminate potential pest access, shelter, and nourishment. It also continually monitors for pests themselves, so that small infestations do not become large ones;

(2) *Least-toxic methods*. IPM aims to minimize both pesticide use and risk through alternate control techniques and by favoring compounds, formulations, and application methods that present the lowest potential hazard to humans and the environment; and

(3) *Systems approach*. The IPM pest control contract must be effectively coordinated with all other relevant programs that operate in and around a building, including plans and procedures involving design and construction, repairs and alterations, cleaning, waste management, food service, and other activities.

(n) For new records storage facilities only, the additional requirements in this paragraph (n) must be met:

(1) Do not install mechanical equipment, excluding material handling and conveyance equipment that have operating thermal breakers on the motor, containing motors rated in excess of 1 HP within records storage areas (either floor mounted or suspended from roof support structures).

(2) Do not install high-voltage electrical distribution equipment (*i.e.*, 13.2kv or higher switchgear and transformers) within records storage areas (either floor mounted or suspended from roof support structures).

(3) A redundant source of primary electric service such as a second primary service feeder should be provided to ensure continuous, dependable service to the facility especially to the HVAC systems, fire alarm and fire protection systems. Manual switching between sources of service is acceptable.

(4) A facility storing permanent records must be kept under positive air pressure, especially in the area of the loading dock. In addition, to prevent fumes from vehicle exhausts from entering the facility, air intake louvers must not be located in the area of the loading dock, adjacent to parking areas, or in any location where a vehicle engine may be running for any period of time. Loading docks must have an air supply and exhaust system that is separate from the remainder of the facility.

§ 1234.12 What are the fire safety requirements that apply to records storage facilities?

(a) The fire detection and protection systems must be designed or reviewed by a licensed fire protection engineer. If the system was not designed by a licensed fire protection engineer, the review requirement is met by furnishing a report under the seal of a licensed fire protection engineer that describes the design intent of the fire detection and suppression system, detailing the characteristics of the system, and describing the specific measures beyond the minimum features required by code that have been incorporated to minimize loss. The report should make specific reference to appropriate industry standards used in the design, such as those issued by the National Fire Protection Association, and any testing or modeling or other sources used in the design.

(b) All interior walls separating records storage areas from each other and from other storage areas in the building must be at least three-hour fire barrier walls. A records storage facility may not store more than 250,000 cubic feet total of Federal records in a single records storage area. When Federal records are combined with other records in a single records storage area, only the Federal records will apply toward this limitation.

(c) Fire barrier walls that meet the following specifications must be provided:

(1) For existing records storage facilities, at least one-hour-rated fire barrier walls must be provided between the records storage areas and other auxiliary spaces.

(2) For new records storage facilities, two-hour-rated fire barrier walls must be provided between the records storage areas and other auxiliary spaces. One exterior wall of each stack area must be designed with a maximum fire

resistive rating of one hour, or, if rated more than one hour, there must be at least one knock-out panel in one exterior wall of each stack area.

(d) Penetrations in the walls must not reduce the specified fire resistance ratings. The fire resistance ratings of structural elements and construction assemblies must be in accordance with ASTM E 119–98 (incorporated by reference, see § 1234.3).

(e) The fire resistive rating of the roof must be a minimum of ½ hour for all records storage facilities, or must be protected by an automatic sprinkler system designed, installed, and maintained in accordance with NFPA 13 (incorporated by reference, see § 1234.3).

(f) Openings in fire barrier walls separating records storage areas must be avoided to the greatest extent possible. If openings are necessary, they must be protected by self-closing or automatic Class A fire doors, or equivalent doors that maintain the same rating as the wall.

(g) Roof support structures that cross or penetrate fire barrier walls must be cut and supported independently on each side of the fire barrier wall.

(h) If fire barrier walls are erected with expansion joints, the joints must be protected to their full height.

(i) Building columns in the records storage areas must be at least 1-hour fire resistant or protected in accordance with NFPA 13 (incorporated by reference, see § 1234.3).

(j) Automatic roof vents for routine ventilation purposes must not be designed into new records storage facilities. Automatic roof vents, designed solely to vent in the case of a fire, with a temperature rating at least twice that of the sprinkler heads are acceptable.

(k) Where lightweight steel roof or floor supporting members (e.g., bar joists having top chords with angles 2 by 12 inches or smaller, 1/4-inch thick or smaller, and 13/16-inch or smaller Web diameters) are present, they must be protected either by applying a 10-minute fire resistive coating to the top chords of the joists, or by retrofitting the sprinkler system with large drop sprinkler heads. If a fire resistive coating is applied, it must be a product that will not release (off gas) harmful fumes into the facility. If fire resistive coating is subject to air erosion or flaking, it must be fully enclosed in a drywall containment constructed of metal studs with fire retardant drywall. Retrofitting may require modifications to the piping system to ensure that adequate water capacity and pressure are provided in the areas to be protected with these large drop sprinkler heads.

(l) Open flame (oil or gas) unit heaters or equipment, if used in records storage areas, must be installed or used in the records storage area in accordance with NFPA 54 (incorporated by reference, see § 1234.3), and the IAPMO/ANSI UMC 1, Uniform Mechanical Code (incorporated by reference, see § 1234.3).

(m) For existing records storage facilities, boiler rooms or rooms containing equipment operating with a fuel supply (such as generator rooms) must be separated from records storage areas by 2-hour-rated fire barrier walls with no openings directly from these rooms to the records storage areas. Such areas must be vented directly to the outside to a location where fumes will not be drawn back into the facility.

(n) For new records storage facilities, boiler rooms or rooms containing equipment operating with a fuel supply (such as generator rooms) must be separated from records storage areas by 4-hour-rated fire barrier walls with no openings directly from these rooms to the records storage areas. Such areas must be vented directly to the outside to a location where fumes will not be drawn back into the facility.

(o) For new records storage facilities, fuel supply lines must not be installed in areas containing records and must be separated from such areas with 4-hour rated construction assemblies.

(p) Equipment rows running perpendicular to the wall must comply with NFPA 101 (incorporated by reference, see § 1234.3), with respect to egress requirements.

(q) No oil-type electrical transformers, regardless of size, except thermally protected devices included in fluorescent light ballasts, may be installed in the records storage areas. All electrical wiring must be in metal conduit, except that armored cable may be

used where flexible wiring connections to light fixtures are required. Battery charging areas for electric forklifts must be separated from records storage areas with at least a 2-hour rated fire barrier wall.

(r) Hazardous materials, including records on cellulose nitrate film, must not be stored in records storage areas. Nitrate motion picture film and nitrate sheet film may be stored in separate areas that meet the requirements of the appropriate NFPA standards, NFPA 40–1997 (incorporated by reference, see § 1234.3), or NFPA 42 (incorporated by reference, see § 1234.3).

(s) All record storage and adjoining areas must be protected by a professionally-designed fire-safety detection and suppression system that is designed to limit the maximum anticipated loss in any single fire event involving a single ignition and no more than 8 ounces of accelerant to a maximum of 300 cubic feet of records destroyed by fire. Section 1234.32 specifies how to document compliance with this requirement.

§ 1234.14 What are the requirements for environmental controls for records storage facilities?

(a) *Paper-based temporary records.* Paper-based temporary records must be stored under environmental conditions that prevent the active growth of mold. Exposure to moisture through leaks or condensation, relative humidities in excess of 70%, extremes of heat combined with relative humidity in excess of 55%, and poor air circulation during periods of elevated heat and relative humidity are all factors that contribute to mold growth.

(b) *Nontextual temporary records.* Nontextual temporary records, including microforms and audiovisual and electronic records, must be stored in records storage space that is designed to preserve them for their full retention period. New records storage facilities that store nontextual temporary records must meet the requirements in this paragraph (b) beginning on September 28, 2005. Existing records storage facilities that store nontextual temporary records must meet the requirements in this paragraph (b) no later than October 1, 2009. At a minimum, nontextual temporary records must be stored in records storage space that meets the requirements for medium term storage set by the appropriate standard in this paragraph (b). In general, medium term conditions as defined by these standards are those that will ensure the preservation of the materials for at least 10 years with little information degradation or loss. Records may continue to be usable for longer than 10 years when stored under these conditions, but with an increasing risk of information loss or degradation with longer times. If temporary records require retention longer than 10 years, better storage conditions (cooler and drier) than those specified for medium term storage will be needed to maintain the usability of these records. The applicable standards are:

(1) ANSI/PIMA IT9.11 (incorporated by reference, see § 1234.3);

(2) ANSI/NAPM IT9.23 (incorporated by reference, see § 1234.3);

(3) ANSI/PIMA IT9.25 (incorporated by reference, see § 1234.3);

(4) ANSI/NAPM IT9.20 (incorporated by reference, see § 1234.3); and/or

(5) ANSI/NAPM IT9.18 (incorporated by reference, see § 1234.3).

(c) *Paper-based permanent, unscheduled and sample/select records.* Paper-based permanent, unscheduled, and sample/select records must be stored in records storage space that provides 24 hour/365 days per year air conditioning (temperature, humidity, and air exchange) equivalent to that required for office space. See ANSI/ASHRAE Standard 55 (incorporated by reference, see § 1234.3), and ASHRAE Standard 62 (incorporated by reference, see § 1234.3), for specific requirements. New records storage facilities that store paper-based permanent, unscheduled, and/or sample/select records must meet the requirement in this paragraph (c) beginning on September 28, 2005. Existing storage facilities that store paper-based permanent, unscheduled, and/or sample/select records must meet the requirement in this paragraph (c) no later than October 1, 2009.

(d) *Nontextual permanent, unscheduled, and/or sample/select records.* All records storage facilities that store microfilm, audiovisual, and/or electronic permanent, unscheduled, and/or sample/select

records must comply with the storage standards for permanent and unscheduled records in parts 1238, 1237, and/or 1236 of this subchapter, respectively.

Subpart C—Handling Deviations From NARA's Facility Standards

§ 1234.20 What rules apply if there is a conflict between NARA standards and other regulatory standards that a facility must follow?

(a) If any provisions of this part conflict with local or regional building codes, the following rules of precedence apply:

(1) Between differing levels of fire protection and life safety, the more stringent provision applies; and

(2) Between mandatory provisions that cannot be reconciled with a requirement of this part, the local or regional code applies.

(b) If any of the provisions of this part conflict with mandatory life safety or ventilation requirements imposed on underground storage facilities by 30 CFR chapter I, 30 CFR chapter I applies.

(c) NARA reserves the right to require documentation of the mandatory nature of the conflicting code and the inability to reconcile that provision with NARA requirements.

§ 1234.22 How does an agency request a waiver from a requirement in this part?

(a) *Types of waivers that may be approved.* NARA may approve exceptions to one or more of the standards in this part for:

(1) Systems, methods, or devices that are demonstrated to have equivalent or superior quality, strength, fire resistance, effectiveness, durability, and safety to those prescribed by this subpart;

(2) Existing agency records centers that met the NARA standards in effect prior to January 3, 2000, but do not meet a new standard required to be in place on September 28, 2005; and

(3) The application of roof requirements in §§ 1234.10 and 1234.12 to underground storage facilities.

(b) *Where to submit a waiver request.* The agency submits a waiver request, containing the information specified in paragraphs (c), (d), and/or (e) of this section to the Director, Space and Security Management Division (NAS), National Archives and Records Administration, 8601 Adelphi Rd., College Park, MD 20740–6001, phone number (301) 837–1867.

(c) *Content of request for waivers for equivalent or superior alternatives.* The agency's waiver request must contain:

(1) A statement of the specific provision(s) of this part for which a waiver is requested, a description of the proposed alternative, and an explanation how it is equivalent to or superior to the NARA requirement; and

(2) Supporting documentation that the alternative does not provide less protection for Federal records than that which would be provided by compliance with the corresponding provisions contained in this subpart. Documentation may take the form of certifications from a licensed fire protection engineer or a structural or civil engineer, as appropriate; reports of independent testing; reports of computer modeling; and/or other supporting information.

(d) *Content of request for waiver for previously compliant agency records center.* The agency's waiver request must identify which requirement(s) the agency records center cannot meet and provide a plan with milestones for bringing the center into compliance.

(e) *Content of request for waiver of roof requirements for underground facility.* The agency's waiver request must identify the location of the facility and whether the facility is a drift entrance facility or a vertical access facility.

§ 1234.24 How does NARA process a waiver request?

(a) *Waiver for equivalent or superior alternative.* NARA will review the waiver request and supporting documentation.

(1) If in NARA's judgment the supporting documentation clearly supports the claim that the alternative is equivalent or superior to the NARA requirement, NARA will grant the waiver and notify the requesting agency within 30 calendar days.

(2) If NARA questions whether supporting documentation demonstrates that the proposed alternative offers at least equal protection to Federal

records, NARA will consult the appropriate industry standards body or other qualified expert before making a determination. NARA will notify the requesting agency within 30 calendar days of receipt of the request that consultation is necessary and will provide a final determination within 60 calendar days. If NARA does not grant the waiver, NARA will furnish a full explanation of the reasons for its decision.

(b) *Waiver of new requirement for existing agency records center*. NARA will review the agency's waiver request and plan to bring the facility into compliance.

(1) NARA will approve the request and plan within 30 calendar days if NARA judges the planned actions and time frames for bringing the facility into compliance are reasonable.

(2) If NARA questions the feasibility or reasonableness of the plan, NARA will work with the agency to develop a revised plan that NARA can approve and the agency can implement. NARA may grant a short-term temporary waiver, not to exceed 180 calendar days, while the revised plan is under development.

(c) *Waiver of roof requirements for underground storage facilities*. NARA will normally grant the waiver and notify the requesting agency within 10 work days if the agency has not also requested a waiver of a different requirement under § 1234.30. If the agency has another waiver request pending for the same facility, NARA will respond to all of the waiver requests at the same time and within the longest time limits.

Subpart D—Facility Approval and Inspection Requirements

§ 1234.30 How does an agency request authority to establish or relocate records storage facilities?

(a) *General policy*. Agencies are responsible for ensuring that records in their legal custody are stored in appropriate space as outlined in this part. Under § 1232.18(a), agencies are responsible for initiating action to remove records from space that does not meet these standards if deficiencies are not corrected within 6 months after initial discovery of the deficiencies by NARA or the agency and to complete removal of the records within 18 months after initial discovery of the deficiencies.

(1) *Agency records centers*. Agencies must obtain prior written approval from NARA before establishing or relocating an agency records center. Each separate agency records center must be specifically approved by NARA prior to the transfer of any records to that individual facility. If an agency records center has been approved for the storage of Federal records of one agency, any other agency that proposes to store its records in that facility must still obtain NARA approval to do so.

(2) *Commercial records storage facilities*. An agency may contract for commercial records storage services. However, before any agency records are transferred to a commercial records storage facility, the transferring agency must ensure that the facility meets all of the requirements for an agency records storage facility set forth in this subpart and must submit the documentation required in paragraph (e) of this section.

(b) *Exclusions*. For purposes of this section, the term ''agency records center'' excludes NARA-owned and operated records centers. For purposes of this section and § 1234.34, the term ''agency records center'' also excludes agency records staging and/or holding areas with a capacity for containing less than 25,000 cubic feet of records. However, such records centers and areas, including records centers operated and maintained by NARA, must comply with the facility standards in §§ 1234.10 through 1234.14.

(c) *Content of requests for agency records centers*. Requests for authority to establish or relocate an agency records center, or to use an agency records center operated by another agency, must be submitted in writing to the Director, Space and Security Management Division (NAS), National Archives and Records Administration, 8601 Adelphi Road, College Park, MD 20740–6001, phone number (301) 837–1867. The request must identify the specific facility and, for requests to establish or relocate the agency's own records center, document compliance with the standards in this subpart. Documentation requirements for § 1234.12(s) are specified in § 1234.32.

(d) *Approval of requests for agency records centers.* NARA will review the submitted documentation to ensure the facility demonstrates full compliance with the standards in this subpart. NARA reserves the right to visit the facility, if necessary, to make the determination of compliance. NARA will inform the agency of its decision within 45 calendar days after the request is received, and will provide the agency information on the areas of noncompliance if the request is denied. Requests will be denied only if NARA determines that the facility does not demonstrate full compliance with the standards in this subpart. Approvals will be valid for a period of 10 years, unless the facility is materially changed before then or an agency or NARA inspection finds that the facility does not meet the standards in this subpart. Material changes require submission of a new request for NARA approval.

(e) *Documentation requirements for storing Federal records in commercial records storage facilities.* At least 45 calendar days before an agency first transfers records to a commercial records storage facility, the agency must submit documentation to NARA that the facility complies with the standards in this subpart. The documentation may take the form of a copy of the agency's contract that incorporates this subpart in its provisions or a statement from the agency records officer that certifies that the facility meets the standards in this subpart. An agency must provide the documentation for each separate commercial records storage facility where its records will be stored. Documentation must be sent to the Director, Space and Security Management Division (NAS), National Archives and Records Administration, 8601 Adelphi Road, College Park, MD 20740–6001, phone number (301) 837–1867. The agency must submit updated documentation to NARA every 10 years if it continues to store records in that commercial records storage facility.

§ 1234.32 What does an agency have to do to certify a fire-safety detection and suppression system?

(a) *Content of documentation.* The agency must submit documentation to the Director, Space and Security Management Division (NAS), National Archives and Records Administration, 8601 Adelphi Road, College Park, MD 20740–6001, phone number (301) 837–1867, that describes the space being protected (e.g., the type and stacking height of the storage equipment used, or how the space is designed, controlled, and operated) and the characteristics of the fire-safety detection and suppression system used. The documentation must demonstrate how that system meets the requirement in § 1234.12(s) through:

(1) A statement that the facility is using a NARA certified system as described in Appendix B to this part;

(2) A report of the results of independent live fire testing (Factory Mutual, Underwriters Laboratories or Southwest Research Institute); or

(3) A report under seal of a licensed fire protection engineer that:

(i) Describes the design intent of the fire suppression system to limit the maximum anticipated loss in any single fire event involving a single ignition and no more than 8 fluid ounces of petroleum-type hydrocarbon accelerant (such as, for example, heptanes or gasoline) to a maximum of 300 cubic feet of Federal records destroyed by fire. The report need not predict a maximum single event loss at any specific number, but rather should describe the design intent of the fire suppression system. The report may make reasonable engineering and other assumptions such as that the fire department responds within XX minutes (the local fire department's average response time) and promptly commences suppression actions. In addition, any report prepared under this paragraph should assume that the accelerant is saturated in a cotton wick that is 3 inches in diameter and 6 inches long and sealed in a plastic bag and that the fire is started in an aisle at the face of a carton at floor level. Assumptions must be noted in the report;

(ii) Details the characteristics of the system; and

(iii) Describes the specific measures beyond the minimum features required by the applicable building code that have been incorporated to limit destruction of records. The report should

make specific references to industry standards used in the design, such as those issued by the National Fire Protection Association, and any testing or modeling or other sources used in the design.

(b) *NARA action.* (1) NARA will approve the fire-safety detection and suppression system within 10 work days if NARA has previously approved the system design for similarly configured space or if a report of independent testing of a new system design is furnished as documentation.

(2) If, in NARA's judgment, the supporting documentation provided in accordance with paragraph (a)(3) of this section clearly demonstrates compliance with §1234.12(s), NARA will approve the fire-safety detection and suppression system within 30 calendar days.

(3) If NARA questions whether supporting documentation demonstrates compliance with §1234.12(s), NARA will consult the appropriate industry standards body or other qualified expert before making a determination. Before any consultation, NARA may ask the agency for additional clarifying information. NARA will notify the requesting agency within 30 calendar days of receipt of the request that consultation is necessary and will provide a final determination within 60 calendar days. If NARA does not approve the system, NARA will furnish a full explanation of the reasons for its decision.

(4) NARA will maintain a list of approved alternative systems.

§1234.34 When may NARA conduct an inspection of a records storage facility?

(a) At the time an agency submits a request to establish an agency records center, pursuant to §1234.30, NARA may conduct an inspection of the proposed facility to ensure that the facility complies fully with the standards in this subpart. NARA may also conduct periodic inspections of agency records centers so long as such facility is used as an agency records center. NARA will inspect its own records center facilities on a periodic basis to ensure that they are in compliance with the requirements of this subpart.

(b) Agencies must ensure, by contract or otherwise, that agency and NARA officials, or their delegates, have the right to inspect commercial records storage facilities to ensure that such facilities fully comply with the standards in this subpart. NARA may conduct periodic inspections of commercial records storage facilities so long as agencies use such facilities to store agency records. The using agency, not NARA, will be responsible for paying any fee or charge assessed by the commercial records storage facility for NARA's conducting an inspection.

(c) NARA will contact the agency operating the records center or the agency holding a contract with a commercial records storage facility in advance to set a date for the inspection.

APPENDIX A TO PART 1234—MINIMUM SECURITY STANDARDS FOR LEVEL III FEDERAL FACILITIES

RECOMMENDED STANDARDS CHART

[Reproduced from Section 2.3 (pp. 2–6 through 2–9) of U.S. Department of Justice, United States Marshals Service report *Vulnerability Assessment of Federal Facilities*]

	Level III
Perimeter Security	
Parking:	
Control of facility parking	Required.
Control of adjacent parking	Desirable.
Avoid leases where parking cannot be controlled	Desirable.
Leases should provide security control for adjacent parking	Desirable.
Post signs and arrange for towing unauthorized vehicles	Required.
ID system and procedures for authorized parking (placard, decal, card key, etc.)	Required.
Adequate lighting for parking areas	Required.
Closed Circuit Television (CCTV) Monitoring:	
CCTV surveillance cameras with time lapse video recording	Recommended.
Post signs advising of 24 hour video surveillance	Recommended.
Lighting:	
Lighting with emergency power backup	Required.
Physical Barriers:	

RECOMMENDED STANDARDS CHART—Continued

[Reproduced from Section 2.3 (pp. 2–6 through 2–9) of U.S. Department of Justice, United States Marshals Service report *Vulnerability Assessment of Federal Facilities*]

	Level III
Extend physical perimeter with barriers (concrete and/or steel composition)	Desirable.
Parking barriers	Desirable.
Entry Security	
Receiving/Shipping:	
Review receiving/shipping procedures (current)	Required.
Implement receiving/shipping procedures (modified)	Required.
Access Control:	
Evaluate facility for security guard requirements	Required.
Security guard patrol	Recommended.
Intrusion detection system with central monitoring capability	Required.
Upgrade to current life safety standards (fire detection, fire suppression systems, etc.)	Required.
Entrances/Exits:	
X-ray & magnetometer at public entrances	Recommended.
Require x-ray screening of all mail/packages	Recommended.
High security locks	Required.
Interior Security	
Employee/Visitor Identification:	
Agency photo ID for all personnel displayed at all times	Recommended.
Visitor control/screening system	Required.
Visitor identification accountability system	Recommended.
Establish ID issuing authority	Recommended.
Utilities:	
Prevent unauthorized access to utility areas	Required.
Provide emergency power to critical systems (alarm systems, radio communications, computer facilities, etc.).	Required.
Occupant Emergency Plans:	
Examine occupant emergency plans (OEP) and contingency procedures based on threats	Required.
OEPs in place, updated annually, periodic testing exercise	Required.
Assign & train OEP officials (assignment based on largest tenant in facility)	Required.
Annual tenant training	Required.
Daycare Centers:	
Evaluate whether to locate daycare facilities in buildings with high threat activities	Required.
Compare feasibility of locating daycare in outside locations	Required.
Security Planning	
Intelligence Sharing:	
Establish law enforcement agency/security liaisons	Required.
Review/establish procedure for intelligence receipt/dissemination	Required.
Establish uniform security/threat nomenclature	Required.
Training:	
Conduct annual security awareness training	Required.
Establish standardized unarmed guard qualifications/training requirements	Required.
Establish standardized armed guard qualifications/training requirements	Required.
Tenant Assignment:	
Co-locate agencies with similar security needs	Desirable.
Do not co-locate high/low risk agencies	Desirable.
Administrative Procedures:	
Establish flexible work schedule in high threat/high risk areas to minimize employee vulnerability to criminal activity.	Desirable.
Arrange for employee parking in/near building after normal work hours	Recommended.
Conduct background security checks and/or establish security control procedures for service contract personnel.	Required.
Construction/Renovation:	
Install mylar film on all exterior windows (shatter protection)	Recommended.
Review current projects for blast standards	Required.
Review/establish uniform standards for construction	Required.
Review/establish new design standard for blast resistance	Required.
Establish street set-back for new construction	Recommended.

TERMS AND DEFINITIONS IN RECOMMENDED STANDARDS CHART

[Reproduced from Appendix B, Details of Recommended Security Standards, U.S. Department of Justice, United States Marshals Service report *Vulnerability Assessment of Federal Facilities*]

Term	Definition/description
B.1 Perimeter Security	
Parking	
Control of Facility Parking	Access to government parking should be limited where possible to government vehicles and personnel. At a minimum, authorized parking spaces and vehicles should be assigned and identified.
Control of Adjacent Parking	Where feasible, parking areas adjacent to federal space should also be controlled to reduce the potential for threats against Federal facilities and employee exposure to criminal activity.
Avoid Leases Where Parking Cannot Be Controlled.	Avoid leasing facilities where parking cannot be controlled. If necessary, relocate offices to facilities that do provide added security through regulated parking.
Lease Should Provide Control for Adjacent Parking.	Endeavor to negotiate guard services as part of lease.
Post Signs and Arrange for Towing Unauthorized Vehicles.	Procedures should be established and implemented to alert the public to towing policies, and the removal of unauthorized vehicles.
ID System and Procedures for Authorized Parking.	Procedures should be established for identifying vehicles and corresponding parking spaces (placard, decal, card key, etc.)
Adequate Lighting for Parking Areas	Effective lighting provides added safety for employees and deters illegal or threatening activities.
Closed circuit television (CCTV) monitoring	
CCTV Surveillance Cameras With Time Lapse Video Recording.	Twenty-four hour CCTV surveillance and recording is desirable at all locations as a deterrent. Requirements will depend on assessment of the security level for each facility. Time-lapse video recordings are also highly valuable as a source of evidence and investigative leads.
Post Signs Advising of 24 Hour Video Surveillance.	Warning signs advising of twenty-four hour surveillance act as a deterrent in protecting employees and facilities.
Lighting	
Lighting with Emergency Power Backup	Standard safety code requirement in virtually all areas. Provides for safe evacuation of buildings in case of natural disaster, power outage, or criminal/terrorist activity.
Physical Barriers	
Extend Physical Perimeter, With Barriers	This security measure will only be possible in locations where the Government controls the property and where physical constraints are not present. (barriers of concrete and/or steel composition)
Parking Barriers	Desirable to prevent unauthorized vehicle access.
B.2 Entry Security	
Receiving/Shipping	
Review Receiving/Shipping Procedures (Current).	Audit current standards for package entry and suggest ways to enhance security.
Implement Receiving/Shipping Procedures (Modified).	After auditing procedures for receiving/shipping, implement improved procedures for security enhancements.
Access Control	
Evaluate Facility for Security Guard Requirements.	If security guards are required, the number of guards at any given time will depend on the size of the facility, the hours of operation, and current risk factors, etc.
Security Guard Patrol	Desirable for level I and II facilities and may be included as lease option. Level III, IV and V facilities will have security guard patrol based on facility evaluation.
Intrusion Detection System With Central Monitoring Capability.	Desirable in Level I facilities, based on evaluation for Level II facilities, and required for Levels III, IV and V.
Upgrade to Current Life Safety Standards	Required for all facilities as part of GSA design requirements, (e.g. fire detection, fire suppression systems, etc.)
Entrances/Exits	
X-Ray and Magnetometer at Public Entrances.	May be impractical for Level I and II facilities. Level III and IV evaluations would focus on tenant agencies, public interface, and feasibility. Required for Level V.
Require X-Ray Screening of all Mail/Packages.	All packages entering building should be subject to x-ray screening and/or visual inspection.

TERMS AND DEFINITIONS IN RECOMMENDED STANDARDS CHART—Continued

[Reproduced from Appendix B, Details of Recommended Security Standards, U.S. Department of Justice, United States Marshals Service report *Vulnerability Assessment of Federal Facilities*]

Term	Definition/description
High Security Locks	Any exterior entrance should have a high security lock as determined by GSA specifications and/or agency requirements.
B.3 Interior Security	
Employee/Visitor Identification	
Agency Photo ID for all Personnel Displayed At All Times.	May not be required in smaller facilities.
Visitor Control/Security System	Visitors should be readily apparent in Level I facilities. Other facilities may ask visitors to sign-in with a receptionist or guard, or require an escort, or formal identification/badge.
Visitor Id Accountability System	Stringent methods of control over visitor badges will ensure that visitors wearing badges have been screened and are authorized to be at the facility during the appropriate time frame.
Establish Id Issuing Authority	Develop procedures and establish authority for issuing employee and visitor IDs.
Utilities	
Prevent Unauthorized Access to Utility Areas.	Smaller facilities may not have control over utility access, or locations of utility areas. Where possible, assure that utility areas are secure and that only authorized personnel can gain entry.
Provide Emergency Power To Critical Systems.	Tenant agency is responsible for determining which computer and communication systems require back-up power. All alarm systems, CCTV monitoring devices, fire detection systems, entry control devices, etc. require emergency power sources. (Alarm Systems, Radio Communications, Computer Facilities, Etc.)
Occupant Emergency Plans	
Examine Occupant Emergency Plan (OEP) and Contingency Procedures Based on Threats.	Review and update current OEP procedures for thoroughness. OEPs should reflect the current security climate.
Assign and Train OEP Officials	Assignment based on GSA requirement that largest tenant in facility maintain OEP responsibility. Officials should be assigned, trained and a contingency plan established to provide for the possible absence of OEP officials in the event of emergency activation of the OEP.
Annual Tenant Training	All tenants should be aware of their individual responsibilities in an emergency situation.
Day Care Center	
Re-Evaluate Current Security and Safety Standards.	Conduct a thorough review of security and safety standards.
Assess Feasibility of Locating Day Care Within Federal Facility.	If a facility is being considered for a day care center, an evaluation should be made based on the risk factors associated with tenants and the location of the facility.
B.4 Security Planning	
Intelligence Sharing	
Establish Law Enforcement Agency/Security Liaisons.	Intelligence sharing between law enforcement agencies and security organizations should be established in order to facilitate the accurate flow of timely and relevant information between appropriate government agencies. Agencies involved in providing security must be part of the complete intelligence process.
Review/Establish Procedures for Intelligence Receipt/Dissemination.	Determine what procedures exist to ensure timely delivery of critical intelligence. Review and improve procedures to alert agencies and specific targets of criminal/terrorist threats. Establish standard administrative procedures for response to incoming alerts. Review flow of information for effectiveness and time critical dissemination.
Establish Uniform Security/Threat Nomenclature.	To facilitate communication, standardized terminology for Alert Levels should be implemented. (Normal, Low, Moderate, and High—As recommended by Security Standards Committee)
Training	
Conduct Annual Security Awareness Training.	Provide security awareness training for all tenants. At a minimum, self-study programs utilizing videos, and literature, etc. should be implemented. These materials should provide up-to-date information covering security practices, employee security awareness, and personal safety, etc.

TERMS AND DEFINITIONS IN RECOMMENDED STANDARDS CHART—Continued

[Reproduced from Appendix B, Details of Recommended Security Standards, U.S. Department of Justice, United States Marshals Service report *Vulnerability Assessment of Federal Facilities*]

Term	Definition/description
Establish Standardized Armed And Unarmed Guard Qualifications/Training Requirements.	Requirements for these positions should be standardized government wide.
Tenant Assignment	
Co-Locate Agencies With Similar Security Needs.	To capitalize on efficiencies and economies, agencies with like security requirements should be located in the same facility if possible.
Do Not Co-Locate High/Low Risk Agencies	Low risk agencies should not take on additional risk by being located with high risk agencies.
Administrative Procedures	
Establish Flexible Work Schedule in High Threat/High Risk Area to Minimize Employee Vulnerability to Criminal Activity.	Flexible work schedules can enhance employee safety by staggering reporting and departure times. As an example flexible schedules might enable employees to park closer to the facility by reducing the demand for parking at peak times of the day.
Arrange for Employee Parking In/Near Building After Normal Work Hours.	Minimize exposure to criminal activity by allowing employees to park at or inside the building.
Conduct Background Security Checks and/or Establish Security Control Procedures for Service Contract Personnel.	Establish procedures to ensure security where private contract personnel are concerned. Procedures may be as simple as observation or could include sign-in/escort. Frequent visitors may necessitate a background check with contractor ID issued.
Construction/Renovation	
Install Mylar Film on All Exterior Windows (Shatter Protection).	Application of shatter resistant material to protect personnel and citizens from the hazards of flying glass as a result of impact or explosion.
Review Current Projects For Blast Standards.	Design and construction projects should be reviewed if possible, to incorporate current technology and blast standards. Immediate review of ongoing projects may generate savings in the implementation of upgrading to higher blast standards prior to completion of construction.
Review/Establish Uniform Standards For Construction.	Review, establish, and implement uniform construction standards as it relates to security considerations.
Review/Establish New Design Standard for Blast RESISTANCE.	In smaller facilities or those that lease space, control over design standards may not be possible. However, future site selections should attempt to locate in facilities that do meet standards. New construction of government controlled facilities should review, establish, and implement new design standards for blast resistance.
Establish Street Set-Back for New Construction.	Every foot between a potential bomb and a building will dramatically reduce damage and increase the survival rate. Street set-back is always desirable, but should be used in conjunction with barriers in Level IV and V facilities.

(Reproduced from Appendix C, *Classification Table,* U.S. Department of Justice, United States Marshals Service report *Vulnerability Assessment of Federal Facilities*)

Level	Typical location
III	Agency Mix: Government Records.

APPENDIX B TO PART 1234—ALTERNATIVE CERTIFIED FIRE-SAFETY DETECTION AND SUPPRESSION SYSTEM(S)

1. *General.* This Appendix B contains information on the Fire-safety Detection and Suppression System(s) tested by NARA through independent live fire testing that are certified to meet the requirement in §1234.12(s) for storage of Federal Records. Use of a system specified in this appendix is optional. A facility may choose to have an alternate fire-safety detection and suppression system approved under §1234.32).

2. *Specifications for NARA facilities using 15 foot high records storage.* NARA fire-safety systems that incorporate all components specified in paragraphs 2.a. through n. of this appendix have been tested and certified to meet the requirements in §1234.12(s) for an acceptable fire-safety detection and suppression system for storage of Federal records.

a. The records storage height must not exceed the nominal 15 feet (±3 inches) records storage height.

b. All records storage and adjoining areas must be protected by automatic wet-pipe

sprinklers. Automatic sprinklers are specified herein because they provide the most effective fire protection for high piled storage of paper records on open type shelving.

c. The sprinkler system must be rated at no higher than 285 degrees Fahrenheit utilizing quick response (QR) fire sprinkler heads and designed by a licensed fire protection engineer to provide the specified density for the most remote 1,500 square feet of floor area at the most remote sprinkler head in accordance with NFPA 13 (incorporated by reference, see §1234.3). For facilities with roofs rated at 15 minutes or greater, provide ½″ QR sprinklers rated at no higher than 285 degrees Fahrenheit designed to deliver a density of 0.30 gpm per square foot. For unrated roofs, provide 0.64″ QR ''large drop'' sprinklers rated at no higher than 285 degrees Fahrenheit. For facilities using 7 or 8 shelf track files, use QR sprinklers rated at no higher than 285 degrees Fahrenheit. For new construction and replacement sprinklers, NARA recommends that the sprinklers be rated at 165 degrees Fahrenheit. Installation of the sprinkler system must be in accordance with NFPA 13 (incorporated by reference, see §1234.3).

d. Maximum spacing of the sprinkler heads must be on a 10-foot grid and the positioning of the heads must provide complete, unobstructed coverage, with a clearance of not less than 18 inches from the top of the highest stored materials.

e. The sprinkler system must be equipped with a water-flow alarm connected to an audible alarm within the facility and to a continuously staffed fire department or an Underwriters Laboratory approved central monitoring station (see UL 827 (incorporated by reference, see §1234.3)) with responsibility for immediate response.

f. A manual fire alarm system must be provided with a Underwriters Laboratory approved (grade A) central monitoring station service or other automatic means of notifying the municipal fire department. A manual alarm pull station must be located adjacent to each exit. Supplemental manual alarm stations are permitted within the records storage areas.

g. All water cutoff valves in the sprinkler system must be equipped with automatic closure alarm (tamper alarm) connected to a continuously staffed station, with responsibility for immediate response. If the sprinkler water cutoff valve is located in an area used by the public, in addition to the tamper alarm, the valves must be provided with frangible (easily broken) padlocks.

h. A dependable water supply free of interruption must be provided including a continuous site fire loop connected to the water main and sized to support the facility with only one portion of the fire loop operational. This normally requires a backup supply system having sufficient pressure and capacity to meet both fire hose and sprinkler requirements for 2-hours. A fire pump connected to an emergency power source must be provided in accordance with NFPA 20 (incorporated by reference, see §1234.3), when adequate water pressure is not assured. In the event that public water mains are not able to supply adequate volumes of water to the site, onsite water storage must be provided.

i. Interior fire hose stations equipped with a 1½ inch diameter hose may be provided in the records storage areas if required by the local fire department, enabling any point in the records storage area to be reached by a 50-foot hose stream from a 100-foot hose lay. If provided, these cabinets must be marked ''For Fire Department Use Only.''

j. Where fire hose cabinets are not required, fire department hose outlets must be provided at each floor landing in the building core or stair shaft. Hose outlets must have an easily removable adapter and cap. Threads and valves must be compatible with the local fire department's equipment. Spacing must be so that any point in the record storage area can be reached with a 50-foot hose stream from a 100-foot hose lay.

k. In addition to the designed sprinkler flow demand, 500 gpm must be provided for hose stream demand. The hose stream demand must be calculated into the system at the base of the main sprinkler riser.

l. Fire hydrants must be located within 250 feet of each exterior entrance or other access to the records storage facility that could be used by firefighters. Each required hydrant must provide a minimum flow capacity of 500 gpm at 20 psi. All hydrants must be at least 50 feet away from the building walls and adjacent to a roadway usable by fire apparatus. Fire hydrants must have at least two, 2½ inch hose outlets and a pumper connection. All threads must be compatible with local standards.

m. Portable water-type fire extinguishers (2½ gallon stored pressure type) must be provided at each fire alarm striking station. The minimum number and locations of fire extinguishers must be as required by NFPA 10 (incorporated by reference, see §1234.3).

n. Single level catwalks without automatic sprinklers installed underneath may be provided in the service aisles if the edges of all files in the front boxes above the catwalks are stored perpendicular to the aisle (to minimize files exfoliation in a fire). Where provided, the walking surface of the catwalks must be of expanded metal at least .09-inch thickness with a 2-inch mesh length. The surface opening ratio must be equal or greater than 0.75. The sprinkler water demand for protection over bays with catwalks where records above the catwalks are not perpendicular to the aisles must be calculated hydraulically to give .30 gpm per square foot for the most remote 2,000 square feet.

PART 1235—TRANSFER OF RECORDS TO THE NATIONAL ARCHIVES OF THE UNITED STATES

Subpart A—General Transfer Requirements

Sec.
1235.1 What are the authorities for part 1235?
1235.2 What definitions apply to this part?
1235.3 What standards are used as guidance for this part?
1235.4 What publications are incorporated by reference in this part?
1235.10 What records do agencies transfer to the National Archives of the United States?
1235.12 When must agencies transfer records to the National Archives of the United States?
1235.14 May agencies retain records for the conduct of regular agency business after they are eligible for transfer?
1235.16 How will NARA respond to an agency's request to retain records?
1235.18 How do agencies transfer records to the National Archives of the United States?
1235.20 How do agencies indicate that transferred records contain information that is restricted from public access?
1235.22 When does legal custody of records transfer to NARA?

Subpart B—Administration of Transferred Records

1235.30 How may records in the National Archives of the United States be used?
1235.32 How does NARA handle restrictions on transferred records?
1235.34 May NARA destroy transferred records?

Subpart C—Transfer Specifications and Standards

1235.40 What records are covered by additional transfer requirements?
1235.42 What specifications and standards for transfer apply to audiovisual, cartographic, and related records?
1235.44 What general transfer requirements apply to electronic records?
1235.46 What electronic media may be used for transferring records to the National Archives of the United States?
1235.48 What documentation must agencies transfer with electronic records?
1235.50 What specifications and standards for transfer apply to electronic records?

AUTHORITY: 44 U.S.C. 2107 and 2108.

SOURCE: 74 FR 51014, Oct. 2, 2009, unless otherwise noted.

Subpart A—General Transfer Requirements

§ 1235.1 What are the authorities for part 1235?

The statutory authorities for this part are 44 U.S.C. 2107 and 2108.

§ 1235.2 What definitions apply to this part?

See § 1220.18 of this subchapter for definitions of terms used in part 1235.

§ 1235.3 What standards are used as guidance for this part?

These regulations conform to guidance provided in ISO 15489–1:2001. Paragraphs 8.3 (Designing and implementing records systems), 9.6 (Storage and handling), and 9.7 (Access) are particularly relevant to this part.

§ 1235.4 What publications are incorporated by reference in this part?

(a) Certain material is incorporated by reference into this part with the approval of the Director of the Federal Register under 5 U.S.C. 552(a) and 1 CFR part 51. To enforce any edition other than that specified in this section, the NARA must publish notice of change in the FEDERAL REGISTER and the material must be available to the public. All approved material is available for inspection at the Office of the Federal Register. For information on the availability of this material at the Office of the Federal Register, call 202–741–6030 or go to *http://www.archives.gov/federal_register/code_of_federal_regulations/ibr_locations.html*.

(b) The material incorporated by reference is also available for inspection at NARA's Archives Library Information Center (NWCCA), Room 2380, 8601 Adelphi Road, College Park, MD 20740–6001, phone number (301) 837–3415, and is available for purchase from the sources listed below. If you experience difficulty obtaining the standards referenced below, contact National Archives and Records Administration, Electronic/Special Media Records Services Division (NWME), 8601 Adelphi Road, College Park, MD 20740, phone number (301) 837–1578.

(c) *International Organization for Standards (ISO)*. The following ISO

standards are available from the American National Standards Institute, 25 West 43rd St., 4th Floor, New York, NY 10036, phone number (212) 642–4900, or online at *http://webstore.ansi.org*.

(1) ISO/IEC 15896:1999 (''ISO/IEC 15896''), Information technology—Data interchange on 12,7 mm 208-track magnetic tape cartridges—DLT 5 format, First Edition, December 15, 1999, IBR approved for § 1235.46.

(2) ISO/IEC 16382:2000 (''ISO/IEC 16382''), Information technology—Data interchange on 12,7 mm 208-track magnetic tape cartridges—DLT 6 format, First Edition, May 15, 2000, IBR approved for § 1235.46.

(d) *Document Engineering Co., Inc.* The following standards are available from the standards reseller DECO—Document Engineering Co., Inc., 15210 Stagg Street, Van Nuys, CA, phone number (818) 782–1010, or online at *http://www.doceng.com:*

(1) ANSI X3.39–1986 (''ANSI X3.39''), American National Standard: Recorded Magnetic Tape for Information Interchange (1600 CPI, PE), 1986, IBR approved for § 1235.46.

(2) [Reserved]

(e) The following standards are not available from the original publisher or a standards reseller. As indicated in paragraph (b) of this section, the standards are available for inspection at the NWCCA. In order to inspect the standards at a NARA location other than the NARA facility in College Park, MD, please contact the NWCCA, Room 2380, 8601 Adelphi Road, College Park, MD 20740–6001, phone number (301) 837–3415 or e-mail your request to *alic@nara.gov*.

(1) ANSI X3.54–1986 (''ANSI X3.54''), American National Standard: Recorded Magnetic Tape for Information Interchange (6250 CPI, Group Coded Recording), 1986, IBR approved for § 1235.46.

(2) ANSI X3.180–1990 (''ANSI X3.180''), American National Standard: Magnetic Tape and Cartridge for Information Interchange—18-Track, Parallel, ½ inch (12.65 mm), 37871 cpi (1491 cpmm), Group-Coded—Requirements for Recording, 1990, IBR approved for § 1235.46.

(3) ANSI/NISO/ISO 9660–1990 (''ANSI/NISO/ISO 9660''), American National Standard for Volume and File Structure of CD–ROM for Information Exchange, 1990, IBR approved for § 1235.46.

(4) ISO/IEC 15307:1997 (''ISO/IEC 15307''), Information technology—Data interchange on 12,7 mm 128-track magnetic tape cartridges—DLT 4 format, First Edition, December 1, 1997, IBR approved for § 1235.46.

§ 1235.10 What records do agencies transfer to the National Archives of the United States?

Agencies must transfer to the National Archives of the United States records that have been scheduled as permanent on an SF 115, Request for Records Disposition Authority, records that are designated as permanent in a GRS; and, when appropriate, records that are accretions to holdings (continuations of series already accessioned.)

§ 1235.12 When must agencies transfer records to the National Archives of the United States?

Permanent records must be transferred to the National Archives of the United States when:

(a) The records are eligible for transfer based on the transfer date specified in a NARA-approved records schedule, or

(b) The records have been in existence for more than 30 years (see also § 1235.14).

§ 1235.14 May agencies retain records for the conduct of regular agency business after they are eligible for transfer?

(a) Agencies may retain records longer than specified on a records disposition schedule only with written approval from NARA.

(b) If the agency determines that the records are needed for the conduct of regular business, the records officer must submit to the National Archives and Records Administration, Modern Records Programs (NWM), 8601 Adelphi Road, College Park, MD 20740–6001, phone number (301) 837–1738, a written request certifying continuing need. This certification must:

(1) Include a comprehensive description and location of records to be retained;

(2) Cite the NARA-approved disposition authority;

(3) Describe the current business for which the records are required;

(4) Estimate the length of time the records will be needed (if no date is provided by the agency, approved certification requests will be effective for a maximum of five years);

(5) Explain why agency needs cannot be met by NARA reference services or copies of records deposited in the National Archives of the United States; and

(6) If records are retained to enable routine public reference by the agency rather than NARA, cite the statutory authority authorizing this agency activity.

§ 1235.16 How will NARA respond to an agency's request to retain records?

(a) *Approval.* NARA will provide written approval of the request to retain the records for the specified period within 30 days of receipt of the request.

(b) *Disapproval.* NARA will provide written disapproval of an agency's request within 30 days. Requests will be denied if the agency is retaining the records primarily to:

(1) Provide access services to persons outside the agency that can be provided by NARA, or

(2) Function as an agency archives, unless specifically authorized by statute or by NARA.

§ 1235.18 How do agencies transfer records to the National Archives of the United States?

Agencies transfer records by submitting a signed SF 258, Agreement to Transfer Records to the National Archives of the United States. Each SF 258 must correlate to a specific records series or other aggregation of records, as identified in an item on the SF 115 or cited on the SF 258.

§ 1235.20 How do agencies indicate that transferred records contain information that is restricted from public access?

When completing an SF 258, agencies must indicate restrictions on the use and examination of records and attach a written justification. The justification must cite the statute or Freedom of Information Act (FOIA) exemption (5 U.S.C. 552(b) as amended), that authorizes the restrictions.

§ 1235.22 When does legal custody of records transfer to NARA?

Legal custody of records passes from the agency to NARA when the appropriate NARA official signs the SF 258 acknowledging receipt of the records.

Subpart B—Administration of Transferred Records

§ 1235.30 How may records in the National Archives of the United States be used?

(a) NARA will enforce restrictions that are consistent with FOIA (5 U.S.C. 552(b) as amended) for both official use of the records by Federal agencies and research by the public.

(b) NARA regulations in Subchapter C of this chapter apply to Federal agency personnel using transferred records for official Government purposes, and to the public at large.

§ 1235.32 How does NARA handle restrictions on transferred records?

(a) *For records less than 30 years old.* Unless required by law, NARA will remove or relax restrictions on transferred records less than 30 years old only with the written concurrence of the transferring agency or, if applicable, its successor agency. If the transferring agency no longer exists, and there is no successor, the Archivist may relax, remove, or impose restrictions to serve the public interest.

(b) *For records more than 30 years old.* (1) After records are more than 30 years old, most statutory and other restrictions on transferred records expire. NARA, however, after consulting with the transferring agency, may keep the restrictions in force for a longer period.

(2) See part 1256 of this chapter for restrictions on specific categories of records, including national security classified information and information that would invade the privacy of an individual that NARA restricts beyond 30 years.

§ 1235.34 May NARA destroy transferred records?

NARA will not destroy records transferred to NARA's custody except:

(a) With the written concurrence of the agency or its successor, or

(b) As authorized on an SF 258.

Subpart C—Transfer Specifications and Standards

§ 1235.40 What records are covered by additional transfer requirements?

In addition to complying with subparts A and B of this part, agencies must follow the specifications and requirements in this subpart when transferring audiovisual, cartographic, architectural, and electronic records to the National Archives of the United States. In general, such records must be transferred to the National Archives of the United States as soon as they become inactive or whenever the agency cannot provide proper care and handling of the records, including adequate storage conditions (see parts 1236 and 1237 of this subchapter).

§ 1235.42 What specifications and standards for transfer apply to audiovisual records, cartographic, and related records?

In general the physical types described below comprise the minimum record elements that are needed for future preservation, duplication, and reference for audiovisual records, cartographic records, and related records.

(a) *Motion pictures.* (1) Agency-sponsored or produced motion picture films (e.g., public information films) whether for public or internal use:

(i) Original negative or color original plus separate optical sound track;

(ii) Intermediate master positive or duplicate negative plus optical track sound track; and,

(iii) Sound projection print and video recording, if they exist.

(2) Agency-acquired motion picture films: Two projection prints in good condition or one projection print and one videotape.

(3) Unedited footage, outtakes, and trims (the discards of film productions) that are properly arranged, labeled, and described and show unstaged, unrehearsed events of historical interest or historically significant phenomena:

(i) Original negative or color original; and

(ii) Matching print or videotape.

(b) *Video recordings.* (1) For videotape, the original or earliest generation videotape and a copy for reference. Agencies must comply with requirements in § 1237.12(d) of this subchapter for original videotapes, although VHS copies can be transferred as reference copies.

(2) For video discs, the premaster videotape used to manufacture the video disc and two copies of the disc. Agencies must consult the National Archives and Records Administration, Special Media Archives Services Division, (NWCS), 8601 Adelphi Road, College Park, MD 20740, phone number (301) 837–2903, before initiating transfers of video discs that depend on interactive software and nonstandard equipment.

(c) *Still pictures.* (1) For analog black-and-white photographs, an original negative and a captioned print. The captioning information may be maintained in another file such as a database if the file number correlation is clear. If the original negative is nitrate, unstable acetate, or glass based, the agency must also transfer a duplicate negative on a polyester base.

(2) For analog color photographs, the original color negative, color transparency, or color slide; a captioned print (or captioning information maintained in another file if the file number correlation is clear); and a duplicate negative, or slide, or transparency, if they exist.

(3) For slide sets, the original and a reference set, and the related audio recording (in accordance with paragraph (e) of this section) and script.

(4) For other pictorial records such as posters, original art work, and filmstrips, the original and a reference copy.

(d) *Digital photographic records.* See 36 CFR 1235.48(e) and 1235.50(e) for transfer requirements for digital photographic records.

(e) *Sound recordings*—(1) *Disc recordings.*

(i) For electronic recordings, the origination recording regardless of form and two compact discs (CDs) or digital video disks (DVDs).

(ii) For analog disc recordings, the master tape and two disc pressings of each recording, typically a vinyl copy

for playback at 33⅓ revolutions per minute (rpm).

(2) For analog audio recordings on magnetic tape (open reel, cassette, or cartridge), the original tape, or the earliest available generation of the recording, and a subsequent generation copy for reference. Agencies must comply with the requirements in 36 CFR 1237.12(c) of this subchapter for audio recordings.

(f) *Finding aids and production documentation*. The following records must be transferred to the National Archives of the United States with the audiovisual records to which they pertain:

(1) Existing finding aids such as data sheets, shot lists, continuities, review sheets, catalogs, indexes, list of captions, and other documentation that are needed or useful to identify or retrieve audiovisual records. Agencies must consult the National Archives and Records Administration, Special Media Archives Services Division (NWCS), 8601 Adelphi Road, College Park, MD 20740, phone number (301) 837–2903, concerning transfer of finding aids that do not meet the requirements of this part for electronic records.

(2) Production case files or similar files that include copies of production contracts, scripts, transcripts, and appropriate documentation bearing on the origin, acquisition, release, and ownership of the production.

(g) *Maps and charts*. (1) Manuscript maps; printed and processed maps on which manuscript changes, additions, or annotations have been made for record purposes or which bear manuscript signatures to indicate official approval; and single printed or processed maps that have been attached to or interfiled with other documents of a record character or in any way made an integral part of a record.

(2) Master sets of printed or processed maps issued by the agency. A master set must include one copy of each edition of a printed or processed map issued.

(3) Paper copies of computer-related and computer-plotted maps that can no longer be reproduced electronically.

(4) Index maps, card indexes, lists, catalogs, or other finding aids that may be helpful in using the maps transferred.

(5) Records related to preparing, compiling, editing, or printing maps, such as manuscript field notebooks of surveys, triangulation and other geodetic computations, and project folders containing agency specifications for creating the maps.

(h) *Aerial photography and remote sensing imagery, including:* (1) Vertical and oblique negative aerial film created using conventional aircraft.

(2) Annotated copy negatives, internegatives, rectified negatives, and glass plate negatives from vertical and oblique aerial film created using conventional aircraft.

(3) Annotated prints from aerial film created using conventional aircraft.

(4) Infrared, ultraviolet, multispectral (multiband), video, imagery radar, and related tapes, converted to a film base.

(5) Indexes and other finding aids in the form of photo mosaics, flight line indexes, coded grids, and coordinate grids.

(i) *Architectural and related engineering drawings, including:*

(1) Design drawings, preliminary and presentation drawings, and models that document the evolution of the design of a building or structure.

(2) Master sets of drawings that document both the initial design and construction and subsequent alterations of a building or structure. This category includes final working drawings, ''as-built'' drawings, shop drawings, and repair and alteration drawings.

(3) Drawings of repetitive or standard details of one or more buildings or structures.

(4) ''Measured'' drawings of existing buildings and original or photocopies of drawings reviewed for approval.

(5) Related finding aids and specifications to be followed.

(j) *Digital geospatial data records*. See § 1235.48(c) for transfer requirements for digital geospatial data records.

§ 1235.44 What general transfer requirements apply to electronic records?

(a) Each agency must retain a copy of permanent electronic records that it

transfers to NARA until it receives official notification that NARA has assumed responsibility for continuing preservation of the records.

(b) For guidance related to the transfer of electronic records other than those covered in this subpart, the agency must consult with the National Archives and Records Administration, Electronic/Special Media Records Services Division (NWME), 8601 Adelphi Road, College Park, MD 20740, phone number (301) 837–3420.

(c) When transferring digital photographs and their accompanying metatdata, the agency must consult with the National Archives and Records Administration, Special Media Archives Services Division (NWCS) for digital photographs, 8601 Adelphi Road, College Park, MD 20740, phone number (301) 837–2903.

§ 1235.46 What electronic media may be used for transferring records to the National Archives of the United States?

(a) *General.* This section specifies the media or method used to transfer permanent records to the National Archives of the United States. (See 36 CFR 1236.28 for the requirements governing the selection of electronic records storage media for current agency use.) The agency must use only media that is are sound and free from defects for transfers to the National Archives of the United States. When permanent electronic records may be disseminated through multiple electronic media (e.g., magnetic tape, CD–ROM) or mechanisms (e.g., FTP), the agency and NARA must agree on the most appropriate medium or method for transfer of the records into the National Archives of the United States.

(b) *Magnetic tape.* Agencies may transfer electronic records to the National Archives of the United States on magnetic tape as follows:

(1) Open-reel magnetic tape must be on ½-inch 9-track tape reels recorded at 1600 or 6250 bpi that meet ANSI X3.39 or ANSI X3.54 (both incorporated by reference, see § 1235.4), respectively.

(2) 18-track 3480-class cartridges must be recorded at 37,871 bpi that meet ANSI X3.180 (incorporated by reference see, § 1235.4). The data must be blocked at no more than 32,760 bytes per block.

(3) For DLT tape IV cartridges, the data must be blocked at no more than 32,760 bytes per block and must conform to the standards cited in the table as follows:

If you are copying the records on . . .	. . . then, the standard below applies.
DLTtape IV with a DLT 4000 drive . . .	ISO/IEC 15307 (incorporated by reference see, § 1235.4).
DLTtape IV with a DLT 7000 drive . . .	ISO/IEC 15896 (incorporated by reference see, § 1235.4).
DLTtape IV with a DLT 8000 drive . . .	ISO/IEC 16382 (incorporated by reference see, § 1235.4).

(c) *Compact-Disk, Read Only Memory (CD–ROM) and Digital Video Disks (DVDs).* Agencies may use CD–ROMs and DVDs to transfer permanent electronic records to the National Archives of the United States.

(1) CD–ROMs used for this purpose must conform to ANSI/NISO/ISO 9660 (incorporated by reference, see § 1235.4).

(2) Permanent electronic records must be stored in discrete files. Transferred CD–ROMs and DVDs may contain other files, such as software or temporary records, but all permanent records must be in files that contain only permanent records. Agencies must indicate at the time of transfer if a CD–ROM or DVD contains temporary records and where those records are located on the CD–ROM or DVD. The agency must also specify whether NARA should return the CD–ROM or DVD to the agency or dispose of it after copying the permanent records to an archival medium.

(3) If permanent electronic records are stored on both CD–ROM (or DVD) and other media, such as magnetic tape, the agency and NARA must agree on the medium that will be used to transfer the records into the National Archives of the United States.

(d) *File Transfer Protocol.* Agencies may use File Transfer Protocol (FTP) to transfer permanent electronic records to the National Archives of the United States only with NARA's approval. Several important factors may

limit the use of FTP as a transfer method, including the number of records, record file size, and available bandwidth. Agencies must contact the National Archives and Records Administration, Special Media Archives Services Division (NWCS), 8601 Adelphi Road, College Park, MD 20740, phone number (301) 837–2903, or the National Archives and Records Administration, Electronic/Special Media Records Services Division (NWME), 8601 Adelphi Road, College Park, MD 20740, phone number (301) 837–1578, to initiate the transfer discussions. Each transfer of electronic records via FTP must be preceded with a signed SF 258 sent to NWME.

(1) FTP file structure may use the 64-character Joliet extension naming convention only when letters, numbers, dashes (–), and underscores (_____) are used in the file and/or directory names, with a slash (/) used to indicate directory structures. Otherwise, FTP file structure must conform to an 8.3 file naming convention and file directory structure as cited in ANSI/NISO/ISO 9660 (incorporated by reference, see § 1235.4).

(2) Permanent electronic records must be transferred in discrete files, separate from temporary files. All permanent records must be transferred in files that contain only permanent records.

§ 1235.48 What documentation must agencies transfer with electronic records?

(a) *General*. Agencies must transfer documentation adequate to identify, service, and interpret the permanent electronic records This documentation must include completed NARA Form 14097, Technical Description for Transfer of Electronic Records, for magnetic tape media, and a completed NARA Form 14028, Information System Description Form, or their equivalents. Agencies must submit the required documentation, if electronic, in an electronic form that conforms to the provisions of this section.

(b) *Data files*. Documentation for data files and data bases must include record layouts, data element definitions, and code translation tables (codebooks) for coded data. Data element definitions, codes used to represent data values, and interpretations of these codes must match the actual format and codes as transferred.

(c) *Digital geospatial data files*. Digital geospatial data files must include the documentation specified in paragraph (b) of this section. In addition, documentation for digital geospatial data files can include metadata that conforms to the Federal Geographic Data Committee's Content Standards for Digital Geospatial Metadata, as specified in Executive Order 12906 of April 11, 1994 (3 CFR, 1995 Comp., p. 882) (Federal geographic data standards are available at *http://www.fgdc.gov/standards/standards_publications*).

(d) *Documents containing SGML tags*. Documentation for electronic files containing textual documents with SGML tags must include a table for interpreting the SGML tags, when appropriate.

(e) *Electronic records in other formats*. (1) This paragraph (e) applies to the documentation for the following types of electronic records:

(i) E-mail messages with attachments;

(ii) Scanned images of textual records;

(iii) Records in portable document format (PDF);

(iv) Digital photographic records; and

(v) Web content records.

(2) Guidance on the documentation for electronic records in these formats are available on the NARA Electronic Records Management Initiative Web page at *http://www.archives.gov/records-mgmt/initiatives/transfer-to-nara.html* or from the National Archives and Records Administration, Special Media Archives Services Division (NWCS), 8601 Adelphi Road, College Park, MD 20740, phone number (301) 837–2903 for digital photographs and metadata, or the National Archives and Records Administration, Electronic/Special Media Records Services Division (NWME), 8601 Adelphi Road, College Park, MD 20740, phone number 301–837–1578, for other electronic records.

§ 1235.50 What specifications and standards for transfer apply to electronic records?

(a) *General.* (1) Agencies must transfer electronic records in a format that is independent of specific hardware or software. Except as specified in paragraphs (c) through (e) of this section, the records must be written in American Standard Code for Information Interchange (ASCII) or Extended Binary Coded Decimal Interchange Code (EBCDIC) with all control characters and other non-data characters removed. Agencies must consult with the National Archives and Records Administration, Electronic/Special Media Records Services Division (NWME), 8601 Adelphi Road, College Park, MD 20740, phone number (301) 837–1578 about electronic records in other formats.

(2) Agencies must have advance approval from NARA for compression of the records, and agencies must comply with a request from NARA to provide the software to decompress the records.

(3) Agencies interested in transferring scheduled electronic records using a Tape Archive (TAR) utility must contact the National Archives and Records Administration, Electronic/Special Media Records Services Division (NWME), 8601 Adelphi Road, College Park, MD 20740, phone number (301) 837–1578 to initiate transfer discussions.

(b) *Data files and databases.* Data files and databases must be transferred to the National Archives of the United States as flat files or as rectangular tables; *i.e.*, as two-dimensional arrays, lists, or tables. All ''records'' (within the context of the computer program, as opposed to a Federal record) or ''tuples,'' *i.e.*, ordered collections of data items, within a file or table must have the same logical format. Each data element within a record must contain only one data value. A record must not contain nested repeating groups of data items. The file must not contain extraneous control characters, except record length indicators for variable length records, or marks delimiting a data element, field, record, or file. If records or data elements in different files need to be linked or combined, then each record must contain one or more data elements that constitute primary and/or foreign keys enabling valid linkages between the related records in separate files.

(c) *Digital geospatial data files.* Digital spatial data files must be transferred to the National Archives of the United States in a format that complies with a non-proprietary, published open standard maintained by or for a Federal, national, or international standards organization. Acceptable transfer formats include the Geography Markup Language (GML) as defined by the Open GIS Consortium.

(d) *Textual documents.* Electronic textual documents must be transferred as plain ASCII files; however, such files may contain standard markup language such as Standard Generalized Markup Language (SGML) or XML tags.

(e) *Electronic mail, scanned images of textual records, portable document format records, digital photographic records, and Web content records.* For guidance on the transfer of these records to NARA, agencies should consult the transfer requirements available on the NARA Electronic Records Management Initiative Web page at *http://www.archives.gov/records-mgmt/initiatives/transfer-to-nara.html* or contact the National Archives and Records Administration, Special Media Archives Services Division (NWCS), 8601 Adelphi Road, College Park, MD 20740, phone number 301–837–2903 for digital photographs and metadata, or the National Archives and Records Administration, Electronic/Special Media Records Services Division (NWME), 8601 Adelphi Road, College Park, MD 20740, phone number (301) 837–1578, for other electronic records,

PART 1236—ELECTRONIC RECORDS MANAGEMENT

Subpart A—General

Sec.

1236.1 What are the authorities for part 1236?
1236.2 What definitions apply to this part?
1236.4 What standards are used as guidance for this part?

1236.6 What are agency responsibilities for electronic records management?

Subpart B—Records Management and Preservation Considerations for Designing and Implementing Electronic Information Systems

1236.10 What records management controls must agencies establish for records in electronic information systems?
1236.12 What other records management and preservation considerations must be incorporated into the design, development, and implementation of electronic information systems?
1236.14 What must agencies do to protect records against technological obsolescence?

Subpart C—Additional Requirements for Electronic Records

1236.20 What are appropriate recordkeeping systems for electronic records?
1236.22 What are the additional requirements for managing electronic mail records?
1236.24 What are the additional requirements for managing unstructured electronic records?
1236.26 What actions must agencies take to maintain electronic information systems?
1236.28 What additional requirements apply to the selection and maintenance of electronic records storage media for permanent records?

AUTHORITY: 44 U.S.C. 2904, 3101, 3102, and 3105.

SOURCE: 74 FR 51014, Oct. 2, 2009, unless otherwise noted.

Subpart A—General

§ 1236.1 What are the authorities for part 1236?

The statutory authority for this part is 44 U.S.C. 2904, 3101, 3102, and 3105. OMB Circular A–130, Management of Federal Information Resources, applies to records and information systems containing records.

§ 1236.2 What definitions apply to this part?

(a) See § 1220.18 of this subchapter for definitions of terms used throughout Subchapter B, including part 1236.

(b) As used in part 1236—

Electronic information system means an information system that contains and provides access to computerized Federal records and other information.

Electronic mail system means a computer application used to create, receive, and transmit messages and other documents. Excluded from this definition are file transfer utilities (software that transmits files between users but does not retain any transmission data), data systems used to collect and process data that have been organized into data files or data bases on either personal computers or mainframe computers, and word processing documents not transmitted on an e-mail system.

Metadata consists of preserved contextual information describing the history, tracking, and/or management of an electronic document.

Unstructured electronic records means records created using office automation applications such as electronic mail and other messaging applications, word processing, or presentation software.

§ 1236.4 What standards are used as guidance for this part?

These regulations conform with ISO 15489–1:2001. Paragraph 9.6 (Storage and handling) is relevant to this part.

§ 1236.6 What are agency responsibilities for electronic records management?

Agencies must:

(a) Incorporate management of electronic records into the records management activities required by parts 1220–1235 of this subchapter;

(b) Integrate records management and preservation considerations into the design, development, enhancement, and implementation of electronic information systems in accordance with subpart B of this part; and

(c) Appropriately manage electronic records in accordance with subpart C of this part.

Subpart B—Records Management and Preservation Considerations for Designing and Implementing Electronic Information Systems

§ 1236.10 What records management controls must agencies establish for records in electronic information systems?

The following types of records management controls are needed to ensure that Federal records in electronic information systems can provide adequate and proper documentation of agency business for as long as the information is needed. Agencies must incorporate controls into the electronic information system or integrate them into a recordkeeping system that is external to the information system itself (see § 1236.20 of this part).

(a) *Reliability:* Controls to ensure a full and accurate representation of the transactions, activities or facts to which they attest and can be depended upon in the course of subsequent transactions or activities.

(b) *Authenticity:* Controls to protect against unauthorized addition, deletion, alteration, use, and concealment.

(c) *Integrity:* Controls, such as audit trails, to ensure records are complete and unaltered.

(d) *Usability:* Mechanisms to ensure records can be located, retrieved, presented, and interpreted.

(e) *Content:* Mechanisms to preserve the information contained within the record itself that was produced by the creator of the record;

(f) *Context:* Mechanisms to implement cross-references to related records that show the organizational, functional, and operational circumstances about the record, which will vary depending upon the business, legal, and regulatory requirements of the business activity; and

(g) Structure: controls to ensure the maintenance of the physical and logical format of the records and the relationships between the data elements.

§ 1236.12 What other records management and preservation considerations must be incorporated into the design, development, and implementation of electronic information systems?

As part of the capital planning and systems development life cycle processes, agencies must ensure:

(a) That records management controls (see § 1236.10) are planned and implemented in the system;

(b) That all records in the system will be retrievable and usable for as long as needed to conduct agency business (i.e., for their NARA-approved retention period). Where the records will need to be retained beyond the planned life of the system, agencies must plan and budget for the migration of records and their associated metadata to new storage media or formats in order to avoid loss due to media decay or technology obsolescence. (See § 1236.14.)

(c) The transfer of permanent records to NARA in accordance with part 1235 of this subchapter.

(d) Provision of a standard interchange format (e.g., ASCII or XML) when needed to permit the exchange of electronic documents between offices using different software or operating systems.

§ 1236.14 What must agencies do to protect records against technological obsolescence?

Agencies must design and implement migration strategies to counteract hardware and software dependencies of electronic records whenever the records must be maintained and used beyond the life of the information system in which the records are originally created or captured. To successfully protect records against technological obsolescence, agencies must:

(a) Determine if the NARA-approved retention period for the records will be longer than the life of the system where they are currently stored. If so, plan for the migration of the records to a new system before the current system is retired.

(b) Carry out upgrades of hardware and software in such a way as to retain the functionality and integrity of the

electronic records created in them. Retention of record functionality and integrity requires:

(1) Retaining the records in a usable format until their authorized disposition date. Where migration includes conversion of records, ensure that the authorized disposition of the records can be implemented after conversion;

(2) Any necessary conversion of storage media to provide compatibility with current hardware and software; and

(3) Maintaining a link between records and their metadata through conversion or migration, including capture of all relevant associated metadata at the point of migration (for both the records and the migration process).

(c) Ensure that migration strategies address non-active electronic records that are stored off-line.

Subpart C—Additional Requirements for Electronic Records

§ 1236.20 What are appropriate recordkeeping systems for electronic records?

(a) *General*. Agencies must use electronic or paper recordkeeping systems or a combination of those systems, depending on their business needs, for managing their records. Transitory e-mail may be managed as specified in § 1236.22(c).

(b) *Electronic recordkeeping*. Recordkeeping functionality may be built into the electronic information system or records can be transferred to an electronic recordkeeping repository, such as a DoD–5015.2 STD-certified product. The following functionalities are necessary for electronic recordkeeping:

(1) *Declare records*. Assign unique identifiers to records.

(2) *Capture records*. Import records from other sources, manually enter records into the system, or link records to other systems.

(3) *Organize records*. Associate with an approved records schedule and disposition instruction.

(4) *Maintain records security*. Prevent the unauthorized access, modification, or deletion of declared records, and ensure that appropriate audit trails are in place to track use of the records.

(5) *Manage access and retrieval*. Establish the appropriate rights for users to access the records and facilitate the search and retrieval of records.

(6) *Preserve records*. Ensure that all records in the system are retrievable and usable for as long as needed to conduct agency business and to meet NARA-approved dispositions. Agencies must develop procedures to enable the migration of records and their associated metadata to new storage media or formats in order to avoid loss due to media decay or technology obsolescence.

(7) *Execute disposition*. Identify and effect the transfer of permanent records to NARA based on approved records schedules. Identify and delete temporary records that are eligible for disposal. Apply records hold or freeze on disposition when required.

(c) *Backup systems*. System and file backup processes and media do not provide the appropriate recordkeeping functionalities and must not be used as the agency electronic recordkeeping system.

§ 1236.22 What are the additional requirements for managing electronic mail records?

(a) Agencies must issue instructions to staff on the following retention and management requirements for electronic mail records:

(1) The names of sender and all addressee(s) and date the message was sent must be preserved for each electronic mail record in order for the context of the message to be understood. The agency may determine that other metadata is needed to meet agency business needs, e.g., receipt information.

(2) Attachments to electronic mail messages that are an integral part of the record must be preserved as part of the electronic mail record or linked to the electronic mail record with other related records.

(3) If the electronic mail system identifies users by codes or nicknames or identifies addressees only by the name of a distribution list, retain the intelligent or full names on directories or

distributions lists to ensure identification of the sender and addressee(s) of messages that are records.

(4) Some e-mail systems provide calendars and task lists for users. These may meet the definition of Federal record. Calendars that meet the definition of Federal records are to be managed in accordance with the provisions of GRS 23, Item 5.

(5) Draft documents that are circulated on electronic mail systems may be records if they meet the criteria specified in 36 CFR 1222.10(b) of this subchapter.

(b) Agencies that allow employees to send and receive official electronic mail messages using a system not operated by the agency must ensure that Federal records sent or received on such systems are preserved in the appropriate agency recordkeeping system.

(c) Agencies may elect to manage electronic mail records with very short-term NARA-approved retention periods (transitory records with a very short-term retention period of 180 days or less as provided by GRS 23, Item 7, or by a NARA-approved agency records schedule) on the electronic mail system itself, without the need to copy the record to a paper or electronic recordkeeping system, provided that:

(1) Users do not delete the messages before the expiration of the NARA-approved retention period, and

(2) The system's automatic deletion rules ensure preservation of the records until the expiration of the NARA-approved retention period.

(d) Except for those electronic mail records within the scope of paragraph (c) of this section:

(1) Agencies must not use an electronic mail system to store the recordkeeping copy of electronic mail messages identified as Federal records unless that system has all of the features specified in § 1236.20(b) of this part.

(2) If the electronic mail system is not designed to be a recordkeeping system, agencies must instruct staff on how to copy Federal records from the electronic mail system to a recordkeeping system.

(e) Agencies that retain permanent electronic mail records scheduled for transfer to the National Archives must either store them in a format and on a medium that conforms to the requirements concerning transfer at 36 CFR part 1235 or maintain the ability to convert the records to the required format and medium at the time transfer is scheduled.

(f) Agencies that maintain paper recordkeeping systems must print and file their electronic mail records with the related transmission and receipt data specified by the agency's electronic mail instructions.

§ 1236.24 What are the additional requirements for managing unstructured electronic records?

(a) Agencies that manage unstructured electronic records electronically must ensure that the records are filed in a recordkeeping system that meets the requirements in § 1236.10, except that transitory e-mail may be managed in accordance with § 1236.22(c).

(b) Agencies that maintain paper files as their recordkeeping systems must establish policies and issue instructions to staff to ensure that unstructured records are printed out for filing in a way that captures any pertinent hidden text (such as comment fields) or structural relationships (e.g., among worksheets in spreadsheets or other complex documents) required to meet agency business needs.

§ 1236.26 What actions must agencies take to maintain electronic information systems?

(a) Agencies must maintain inventories of electronic information systems and review the systems periodically for conformance to established agency procedures, standards, and policies as part of the periodic reviews required by 44 U.S.C. 3506. The review should determine if the records have been properly identified and described, and if the schedule descriptions and retention periods reflect the current informational content and use. If not, agencies must submit an SF 115, Request for Records Disposition Authority, to NARA.

(b) Agencies must maintain up-to-date documentation about electronic information systems that is adequate to:

(1) Specify all technical characteristics necessary for reading and processing the records contained in the system;

(2) Identify all inputs and outputs;

(3) Define the contents of the files and records;

(4) Determine restrictions on access and use;

(5) Understand the purpose(s) and function(s) of the system;

(6) Describe update cycles or conditions and rules for adding, changing, or deleting information in the system; and

(7) Ensure the timely, authorized disposition of the records.

§ 1236.28 What additional requirements apply to the selection and maintenance of electronic records storage media for permanent records?

(a) Agencies must maintain the storage and test areas for electronic records storage media containing permanent and unscheduled records within the following temperature and relative humidity ranges:

(1) Temperature—62° to 68 °F.

(2) Relative humidity—35% to 45%.

(b) Electronic media storage libraries and test or evaluation areas that contain permanent or unscheduled records must be smoke-free.

(c) For additional guidance on the maintenance and storage of CDs and DVDS, agencies may consult the National Institute of Standards and Technology (NIST) Special Publication 500–252, Care and Handling of CDs and DVDs at *http://www.itl.nist.gov/iad/894.05/papers/CDandDVDCareandHandlingGuide.pdf*, contact phone number (301) 975–6478.

(d) Agencies must test magnetic computer tape media no more than 6 months prior to using them to store electronic records that are unscheduled or scheduled for permanent retention. This test should verify that the magnetic computer tape media are free of permanent errors and in compliance with NIST or industry standards.

(e) Agencies must annually read a statistical sample of all magnetic computer tape media containing permanent and unscheduled records to identify any loss of data and to discover and correct the causes of data loss. In magnetic computer tape libraries with 1800 or fewer tape media, a 20% sample or a sample size of 50 media, whichever is larger, should be read. In magnetic computer tape libraries with more than 1800 media, a sample of 384 media should be read. Magnetic computer tape media with 10 or more errors should be replaced and, when possible, lost data must be restored. All other magnetic computer tape media which might have been affected by the same cause (i.e., poor quality tape, high usage, poor environment, improper handling) must be read and corrected as appropriate.

(f) Before the media are 10 years old, agencies must copy permanent or unscheduled data on magnetic records storage media onto tested and verified new electronic media.

PART 1237—AUDIOVISUAL, CARTOGRAPHIC, AND RELATED RECORDS MANAGEMENT

Sec.

1237.1 What is the applicability and scope of this part?
1237.2 What are the authorities for part 1237?
1237.3 What standards are incorporated by reference for this part?
1237.4 What definitions apply to this part?
1237.10 How must agencies manage their audiovisual, cartographic, and related records?
1237.12 What record elements must be created and preserved for permanent audiovisual records?
1237.14 What are the scheduling requirements for audiovisual, cartographic, and related records?
1237.16 How do agencies store audiovisual records?
1237.18 What are the environmental standards for audiovisual records storage?
1237.20 What are special considerations in the maintenance of audiovisual records?
1237.22 What are special considerations in the storage and maintenance of cartographic and related records?
1237.24 What are the special considerations for storage and maintenance of aerial photographic records?
1237.26 What materials and processes must agencies use to create audiovisual records?
1237.28 What special concerns apply to digital photographs?
1237.30 How do agencies manage records on nitrocellulose-base and cellulose-acetate base film?

AUTHORITY: 44 U.S.C. 2904 and 3101.

SOURCE: 74 FR 51014, Oct. 2, 2009, unless otherwise noted.

§ 1237.1 What is the applicability and scope of this part?

Agencies must manage audiovisual, cartographic, and related records in accordance with parts 1220–1235. This part prescribes additional policies and procedures for managing audiovisual, cartographic, and related records to ensure adequate and proper documentation and authorized, timely, and appropriate disposition.

§ 1237.2 What are the authorities for part 1237?

The authorities for this part are 44 U.S.C. 2904 and 3101.

§ 1237.3 What standards are incorporated by reference in this part?

(a) Certain material is incorporated by reference into this part with the approval of the Director of the Federal Register under 5 U.S.C. 552(a) and 1 CFR part 51. To enforce any edition other than that specified in this section, NARA must publish notice of change in the FEDERAL REGISTER and the material must be available to the public. All approved material is available for inspection at the Office of the Federal Register. For information on the availability of this material at the Office of the Federal Register, call (202) 741–6030 or go to *http://www.archives.gov/federal_register/code_of_federal_regulations/ibr_locations.html*.

(b) The material incorporated by reference is also available for inspection at NARA's Archives Library Information Center (NWCCA), Room 2380, 8601 Adelphi Road, College Park, MD 20740–6001, phone number (301) 837–3415, and is available for purchase from the sources listed below. If you experience difficulty obtaining the standards referenced below, contact NARA's Policy and Planning Staff (NPOL), National Archives and Records Administration, 8601 Adelphi Road, College Park, MD 20740–6001, phone number (301) 837–1850.

(c) *American National Standards Institute (ANSI) and International Organization for Standards (ISO) standards*. The following ANSI and ISO standards are available from the American National Standards Institute, 25 West 43rd St., 4th Floor, New York, NY 10036, phone number (212) 642–4900, or online at *http://webstore.ansi.org*.

(1) ISO 18906: 2000 (''ISO 18906''), Imaging Materials—Photographic Films—Specifications for Safety Film, First Edition, December 15, 2000, IBR approved for § 1237.26.

(2) ISO 18911: 2000 (''ISO 18911''), Imaging materials—Processed safety photographic films—Storage practices, First Edition, November 1, 2000, IBR approved for § 1238.20, IBR approved for §§ 1237.16 and 1237.18.

(3) ISO 18920: 2000 (''ISO 18920''), Imaging Materials—Processed Photographic Reflection Prints—Storage Practices, First Edition, July 15, 2000, IBR approved for § 1237.18.

(4) ANSI/AIIM TR34: 1996 (''ANSI/AIIM TR34''), Sampling Procedures for Inspection by Attributes of Images in Electronic Image Management and Micrographic Systems, May 13, 1996, IBR approved for § 1237.28.

(d) *National Fire Protection Association (NFPA)*. The following standards are available from the National Fire Protection Association, 1 Batterymarch Park, P.O. Box 9109, Quincy, MA 02269–9101, phone number (617) 770–3000 or online at *http://catalog.nfpa.org*.

(1) NFPA 40–2007 (''NFPA 40–2007''), Standard for the Storage and Handling of Cellulose Nitrate Film, 2007, IBR approved for § 1237.30.

(2) Reserved.

(e) *Techstreet*. The following standards are available from the standards reseller Techstreet, 3916 Ranchero Drive, Ann Arbor, MI 48108, phone number (800) 699–9277, or online at *http://www.Techstreet.com*.

(1) ISO 18902: 2001 (''ISO 18902''), Imaging Materials—Processed Photographic Films, Plates, and Papers—Filing Enclosures and Storage Containers, 2001, IBR approved for § 1237.16.

(2) ISO 18923: 2000 (''ISO 18923''), Imaging Materials—Polyester-Base Magnetic Tape—Storage Practices, First Edition, June 1, 2000, IBR approved for § 1237.18.

(3) ISO 18925: 2002 (''ISO 18925''), Imaging Materials—Optical Disc Media—Storage Practices, First Edition, June 1, 2002, IBR approved for § 1237.18.

(f) The following standards are not available from the original publisher or a standards reseller. As indicated in paragraph (b) of this section, the standards are available for inspection at the NWCCA. In order to inspect the standards at a NARA location other than the NARA facility in College Park, MD, please contact the NWCCA, Room 2380, 8601 Adelphi Road, College Park, MD 20740–6001, phone number (301) 837–3415 or e-mail your request to *alic@nara.gov*.

(1) ISO 2859–1: 1996 (''ISO 2859–1''), Sampling Procedures for Inspection by Attributes—Part 1: Sampling Plans Indexed by Acceptable Quality Level (AQL) for Lot-by-Lot Inspection, 1996, IBR approved for § 1237.28.

(2) ANSI/NAPM IT9.11–1993 (''ANSI/NAPM IT9.11–1993''), Imaging Media—Processed Safety Photographic Films—Storage, 1993, IBR approved for § 1237.16.

§ 1237.4 What definitions apply to this part?

(a) See § 1220.18 of this subchapter for definitions of terms used throughout Subchapter B, including part 1237.

(b) As used in part 1237—

Aerial photographic records means film-based images of the surface of the earth, of other planetary bodies, or of the atmosphere that have been taken from airborne vehicles or satellites. They include vertical and oblique aerial negative film taken from conventional aircraft as well as copy negatives, internegatives, rectified negatives, and annotated and other prints from these negatives. Also included are infrared, ultraviolet, multispectral, video, and radar imagery that has been converted to a film base. These records also include the relevant index system in whatever form it may exist such as mosaics, flight-line overlays or annotated maps, or electronic data bases capturing the latitude and longitude (or other coordinate-based location data) of individual aerial photographic center points.

Architectural and engineering records means graphic records that depict the proposed and actual construction of stationary structures, such as buildings, bridges, and canals as well as movable objects, such as ships, aircraft, vehicles, weapons, machinery, and equipment. These records are also known as design and construction drawings and include closely related indexes and written specifications.

Audiovisual means any pictorial or aural means of communicating information, e.g., photographic prints, negatives, slides, digital images, sound recordings, and moving images.

Audiovisual equipment means equipment used for recording, producing, duplicating, processing, broadcasting, distributing, storing, or exhibiting audiovisual materials or for providing any audiovisual services.

Audiovisual production means an organized and unified presentation, developed according to a plan or script, containing visual imagery, sound, or both, and used to convey information. An audiovisual production generally is a self-contained presentation.

Audiovisual records means records in pictorial or aural form, including still photographs and motion media (*i.e.*, moving images whether on motion picture film or as video recordings), sound recordings, graphic works (e.g., printed posters), mixed media, and related finding aids and production files.

Cartographic records means graphic representations drawn to scale of selected cultural and physical features of the surface of the earth, of other planetary bodies, and of the atmosphere. They include maps, charts, photomaps, orthophotomaps and images, atlases, cartograms, globes, and relief models. Related records are those that are integral to the map-making process, such as field survey notes, geodetic controls, map history case files, source material, indexes, and finding aids.

§ 1237.10 How must agencies manage their audiovisual, cartographic, and related records?

Each Federal agency must manage its audiovisual, cartographic and related records as required in parts 1220 through 1235. In addition, agencies must:

(a) Prescribe the types of audiovisual, cartographic, and related records to be created and maintained. (See § 1235.42 of this subchapter for transfer requirements for permanent audiovisual records.)

(b) Create and maintain current inventories showing the location of all generations of audiovisual records and all cartographic and related records, especially those not maintained centrally by the agency.

§ 1237.12 What record elements must be created and preserved for permanent audiovisual records?

For permanent audiovisual records, the following record elements must be created or acquired and preserved for transfer into the National Archives of the United States. (See § 1235.42 of this subchapter for transfer requirements for permanent audiovisual records.)

(a) *Motion pictures.* (1) Agency-sponsored or produced motion picture films (e.g., public information films) whether for public or internal use:

(i) Original negative or color original plus separate optical sound track;

(ii) Intermediate master positive or duplicate negative plus optical track sound track; and,

(iii) Sound projection print and video recording, if both exist.

(2) Agency-acquired motion picture films: Two projection prints in good condition or one projection print and one videotape.

(3) Unedited footage, outtakes and trims (the discards of film productions) that are properly arranged, labeled, and described and show unstaged, unrehearsed events of historical interest or historically significant phenomena:

(i) Original negative or color original; and

(ii) Matching print or videotape.

(b) *Video recordings.* (1) For analog videotapes, the original or earliest generation videotape using industrial-quality or professional videotapes for originals and a copy for reference.

(2) For video discs, the premaster video used to manufacture the video disc and two copies of the disc.

(c) *Still pictures.* (1) For analog black-and-white photographs, an original negative and a captioned print or the captioning information maintained in another file such as a data base if the file number correlation is clear. If the original negative is nitrate, unstable acetate, or glass based, a duplicate negative on a polyester base is needed.

(2) For analog color photographs, the original color negative, color transparency, or color slide; a captioned print of the original color negative and/or captioning information in another file such as a data base with a clear correlation to the relevant image; and a duplicate negative, or slide, or transparency.

(3) For slide sets, the original and a reference set, and the related audio recording and script.

(4) For other pictorial records such as posters, original art work, and filmstrips, the original and a reference copy.

(d) *Digital photographic records.* See § 1237.28 for requirements for digital photographs.

(e) *Sound recordings.* (1) Disc recordings:

(i) For electronic recordings, the origination recording regardless of form and two compact discs (CDs) or digital video disks (DVDs).

(ii) For analog disc recordings, the master tape and two disc pressings of each recording, typically a vinyl copy for playback at 33⅓ revolutions per minute (rpm).

(2) For analog audio recordings on magnetic tape (open reel, cassette, or cartridge), the original tape, or the earliest available generation of the recording, and a subsequent generation copy for reference.

(f) *Finding aids and production documentation.* (1) Existing finding aids such as data sheets, shot lists, continuities, review sheets, catalogs, indexes, list of captions, and other documentation that identifies the records.

(2) Production case files or similar files that include copies of production contracts, scripts, transcripts, and appropriate documentation bearing on the origin, acquisition, release, and ownership of the production.

§ 1237.14 What are the additional scheduling requirements for audiovisual, cartographic, and related records?

The disposition instructions should also provide that permanent records be transferred to the National Archives of the United States within 5–10 years after creation (see also 36 CFR part 1235). See § 1235.42 of this subchapter for

specifications and standards for transfer to the National Archives of the United States of audiovisual, cartographic, and related records.

§ 1237.16 How do agencies store audiovisual records?

Agencies must maintain appropriate storage conditions for permanent, long-term temporary or unscheduled audiovisual records:

(a) Ensure that audiovisual records storage facilities comply with 36 CFR part 1234.

(b) For the storage of permanent, long-term temporary, or unscheduled records, use audiovisual storage containers or enclosures made of non-corroding metal, inert plastics, paper products and other safe materials recommended in ISO 18902 and ISO 18911 (both incorporated by reference, see § 1237.3);

(c) Store originals and use copies (e.g., negatives and prints) separately, whenever practicable. Store distinct audiovisual record series separately from textual series (e.g., store poster series separately from other kinds of agency publications, or photographic series separately from general reference files). Retain intellectual control through finding aids, annotations, or other descriptive mechanisms;

(d) Store series of permanent and unscheduled x-ray films, i.e, x-rays that are not interspersed among paper records (case files), in accordance with § 1238.20 of this subchapter. Store series of temporary x-ray films under conditions that will ensure their preservation for their full retention period, in accordance with ANSI/PIMA IT9.11–1993 (incorporated by reference, see § 1237.3);

(e) Store posters and similar graphic works in oversize formats, in map cases, hanging files, or other enclosures that are sufficiently large or flexible to accommodate the records without rolling, folding, bending, or other ways that compromise image integrity and stability; and

(f) Store optical disks in individual containers and use felt-tip, water-based markers for disk labeling.

§ 1237.18 What are the environmental standards for audiovisual records storage?

(a) *Photographic film and prints.* The requirements in this paragraph apply to permanent, long-term temporary, and unscheduled audiovisual records.

(1) *General guidance.* Keep all film in cold storage following guidance by the International Organization for Standardization in ISO 18911 (incorporated by reference, see § 1237.3). See also ISO 18920 (incorporated by reference, see § 1237.3).

(2) *Color images and acetate-based media.* Keep in an area maintained below 40 degrees Fahrenheit with 20–40% relative humidity to retard the fading of color images and the deterioration of acetate-based media.

(b) *Digital images on magnetic tape.* For digital images stored on magnetic tape, keep in an area maintained at a constant temperature range of 62 degrees Fahrenheit to 68 degrees Fahrenheit, with constant relative humidity from 35% to 45%. See also the recommendations in ISO 18923 (incorporated by reference, see § 1237.3); and the requirements for electronic records storage in 36 CFR 1236.28.

(c) *Digital images on optical media.* For permanent, long-term temporary, or unscheduled digital images maintained on optical media (e.g., CDs, DVDs), use the recommended storage temperature and humidity levels stated in ISO 18925 (incorporated by reference, see § 1237.3).

§ 1237.20 What are special considerations in the maintenance of audiovisual records?

Agencies must:

(a) Handle audiovisual records in accordance with commonly accepted industry practices.

(b) Protect audiovisual records, including those recorded on digital media or magnetic sound or video media, from accidental or deliberate alteration or erasure.

(c) If different versions of audiovisual productions (e.g., short and long versions or foreign-language versions) are prepared, keep an unaltered copy of each version for record purposes.

(d) Link audiovisual records with their finding aids, including captions

and published and unpublished catalogs, inventories, indexes, and production files and similar documentation created in the course of audiovisual production. Establish and communicate agency-wide, clear captioning standards, procedures, and responsibilities.

(e) Maintain current and accessible documentation identifying creators of audiovisual products, their precise relationship to the agency, and the nature and status of copyright or other rights affecting the present and future use of items acquired from sources outside the agency. (See § 1222.32 of this subchapter for requirements to ensure agency ownership of appropriate contractor produced records.)

(f) Create unique identifiers for all audiovisual records (e.g., for digital files, use file naming conventions), that clarify connections between related elements (e.g., photographic prints and negatives, or original edited masters and dubbing for video and audio recordings), and that associate records with the relevant creating, sponsoring, or requesting offices.

(g) Maintain temporary and permanent audiovisual records separately.

(h) Require that personnel wear white lint-free cotton (or other approved) gloves when handling film.

§ 1237.22 What are special considerations in the storage and maintenance of cartographic and related records?

Agencies must:

(a) Maintain permanent and unscheduled cartographic, architectural, and engineering records in an environment that does not exceed 70 degrees Fahrenheit and with relative humidity under 50%.

(b) Create an identification scheme for each series and assign unique identification designations to each item within a series.

(c) Maintain lists or indexes for each series with cross-references to related textual records.

(d) Avoid interfiling separate series of maps, charts, or drawings, and file permanent cartographic and architectural records separately from temporary series unless hand-corrected versions have been systematically filed with other published maps in a central or master file.

(e) Avoid rolling and folding maps and drawings. Store permanent maps and drawings flat in shallow drawer map cases in acid-free folders.

(f) Do not laminate original oversize records. Consult the National Archives and Records Administration, Preservation Programs, (NWT), 8601 Adelphi Road, College Park, MD 20740, phone number (301) 837–1785 for preservation, storage, and treatment options.

§ 1237.24 What are special considerations for storage and maintenance of aerial photographic records?

(a) Mark each aerial film container with a unique identification code to facilitate identification and filing.

(b) Mark aerial film indexes with the unique aerial film identification codes or container codes for the aerial film that they index. Also, file and mark the aerial indexes in such a way that they can easily be retrieved by area covered.

§ 1237.26 What materials and processes must agencies use to create audiovisual records?

Agencies must:

(a) For picture negatives and motion picture preprints (negatives, masters, and all other copies) of permanent, long-term temporary, or unscheduled records, use polyester base media and process in accordance with industry standards as specified in ISO 18906 (incorporated by reference, see § 1237.3).

(1) Ensure that residual sodium thiosulfate (hypo) on newly processed black-and-white photographic film does not exceed 0.014 grams per square meter.

(2) Require laboratories to process film in accordance with this standard. Process color film in accordance with the manufacturer's recommendations.

(3) If using reversal type processing, require full photographic reversal; *i.e.*, develop, bleach, expose, develop, fix, and wash.

(b) Avoid using motion pictures in a final ''A & B'' format (two precisely matched reels designed to be printed together) for the reproduction of excerpts or stock footage.

(c) Use only industrial or professional video and audio recording equipment,

new and previously unrecorded magnetic tape stock and blank optical media (e.g., DVD and CD), for original copies of permanent, long-term temporary, or unscheduled recordings. Limit the use of consumer formats to distribution or reference copies or to subjects scheduled for destruction. Avoid using videocassettes in the VHS format for use as originals of permanent or unscheduled records.

(d) Record permanent, long-term, temporary, or unscheduled audio recordings on optical media from major manufacturers. Avoid using cassettes as originals for permanent records or unscheduled records (although they may be used as reference copies).

(e) For born-digital or scanned digital images that are scheduled as permanent or unscheduled, a record (or master) version of each image must be comparable in quality to a 35 mm film photograph or better, and must be saved in Tagged Image File Format (TIFF) or JPEG File Interchange Format (JFIF, JPEG). For more detailed requirements on image format and resolution, see § 1235.48(e) of this subchapter. For temporary digital photographs, agencies select formats that they deem most suitable for fulfillment of business needs.

§ 1237.28 What special concerns apply to digital photographs?

Digital photographs, either originating in digital form (''born-digital'') or scanned from photographic prints, slides, and negatives, are subject to the provisions of this part and the requirements of 36 CFR part 1236, and NARA guidance for transfer of digital photographs located on the following NARA Web page—*http://www.archives.gov/records-mgmt/initiatives/digital-photo-records.html*. In managing digital photographs, agency and contractor personnel must:

(a) Schedule digital photographs and related databases as soon as possible for the minimum time needed for agency business and transfer the records promptly according to the disposition instructions on their records schedule.

(b) Select image management software and hardware tools that will meet long-term archival requirements, including transfer to the National Archives of the United States, as well as business needs. Additional information and assistance is available from the National Archives and Records Administration, Modern Records Program (NWM), 8601 Adelphi Road, College Park, MD 20740, phone number (301) 837–1738.

(c) When developing digital image storage strategies, build redundancy into storage systems, backing up image files through on-line approaches, off-line, or combinations of the two. (See also electronic storage requirements in § 1236.28 of this subchapter).

(d) For scanned digital images of photographic prints, slides, and negatives that are scheduled as permanent or unscheduled, document the quality control inspection process employed during scanning.

(1) Visually inspect a sample of the images for defects, evaluate the accuracy of finding aids, and verify file header information and file name integrity.

(2) Conduct the sample using a volume sufficiently large to yield statistically valid results, in accordance with one of the quality sampling methods presented in ANSI/AIIM TR34 (incorporated by reference, see § 1237.3). (See also ISO 2859–1 (incorporated by reference, see § 1237.3).)

(e) For born-digital images scheduled as permanent, long-term temporary, or unscheduled, perform periodic inspections, using sampling methods or more comprehensive verification systems (e.g., checksum programs), to evaluate image file stability, documentation quality, and finding aid reliability. Agencies must also establish procedures for refreshing digital data (recopying) and file migration, especially for images and databases retained for five years or more.

(f) Designate a record set of images that is maintained separately from other versions. Record sets of permanent or unscheduled images that have already been compressed once (e.g., compressed TIFF or first-generation JPEG) must not be subjected to further changes in image size.

(g) Organize record images in logical series. Group permanent digital images separately from temporary digital images.

(h) Document information about digital photographic images as they are produced. For permanent or unscheduled images descriptive elements must include:

(1) An identification number;

(2) Information about image content;

(3) Identity and organizational affiliation of the photographer;

(4) Existence of any copyright or other potential restrictions on image use; and

(5) Technical data including file format and version, bit depth, image size, camera make and model, compression method and level, custom or generic color profiles (ICC/ICM profile), and, where applicable, Exchangeable Image File Format (EXIF) information embedded in the header of image files by certain digital cameras.

(i) Provide a unique file name to identify the digital image.

(j) Develop finding aids sufficiently detailed to ensure efficient and accurate retrieval. Ensure that indexes, caption lists, and assignment logs can be used to identify and chronologically cut-off block of images for transfer to the NARA.

§ 1237.30 How do agencies manage records on nitrocellulose-base and cellulose-acetate base film?

(a) The nitrocellulose base, a substance akin to gun cotton, is chemically unstable and highly flammable. Agencies must handle nitrocellulose-base film (used in the manufacture of sheet film, 35 mm motion pictures, aerial and still photography into the 1950s) as specified below:

(1) Remove nitrocellulose film materials (e.g., 35mm motion picture film and large series of still pictures) from records storage areas.

(2) Notify the National Archives and Records Administration, Modern Records Program (NWM), 8601 Adelphi Road, College Park, MD 20740, phone number (301) 837–1738, about the existence of nitrocellulose film materials for a determination of whether they may be destroyed or retained after a copy is made by the agency for transfer to NARA. If NARA appraises nitrate film materials as disposable and the agency wishes to retain them, the agency must follow the standard NFPA 40–2007 (incorporated by reference, see § 1237.3).

(3) Follow the packing and shipping of nitrate film as specified in Department of Transportation regulations (49 CFR 172.101, Hazardous materials table; 172.504, Transportation; 173.24, Standard requirements for all packages; and 173.177, Motion picture film and X-ray film—nitrocellulose base).

(b) Agencies must inspect cellulose-acetate film periodically for an acetic odor, wrinkling, or the presence of crystalline deposits on the edge or surface of the film that indicate deterioration. Agencies must notify the National Archives and Records Administration, Modern Records Program (NWM), 8601 Adelphi Road, College Park, MD 20740, phone number (301) 837–1738, immediately after inspection about deteriorating permanent or unscheduled audiovisual records composed of cellulose acetate so that they can be copied by the agency prior to transfer of the original and duplicate film to NARA.

PART 1238—MICROFORMS RECORDS MANAGEMENT

Subpart A—General

Sec.
1238.1 What is the scope of this part?
1238.2 What are the authorities for part 1238?
1238.3 What definitions apply to this part?
1238.4 What standards are used as guidance for this part?
1238.5 What publications are incorporated by reference?

Subpart B—Microfilming Standards

1238.10 What are the format standards for microfilming records?
1238.12 What documentation is required for microfilmed records?
1238.14 What are the microfilming requirements for permanent and unscheduled records?
1238.16 What are the microfilming requirements for temporary records, duplicates, and user copies?

Subpart C—Storage, Use, and Disposition Standards for Microform Records

1238.20 How must microforms records be stored?

1238.22 What are the inspection requirements for permanent and unscheduled microform records?
1238.24 What are NARA inspection requirements for temporary microform records?
1238.26 What are the restrictions on use for permanent and unscheduled microform records?
1238.28 What must agencies do when sending permanent microform records to a records storage facility?
1238.30 What must agencies do when transferring permanent microform records to the National Archives of the United States?
1238.32 Do agencies need to request NARA approval for the disposition of all microform and source records?

AUTHORITY: 44 U.S.C. chapters 29 and 33.

SOURCE: 74 FR 51014, Oct. 2, 2009, unless otherwise noted.

Subpart A—General

§ 1238.1 What is the scope of this part?

This part covers the standards and procedures for using micrographic technology in the management of Federal records.

§ 1238.2 What are the authorities for part 1238?

The statutory authorities for this part are 44 U.S.C. chapters 29 and 33.

§ 1238.3 What definitions apply to this part?

See § 1220.18 of this subchapter for definitions of terms used in part 1238.

§ 1238.4 What standards are used as guidance for this part?

These regulations conform with guidance provided in ISO15489–1:2001, part 7.1 (Principles of records management programmes), and 9.6 (storage and handling).

§ 1238.5 What publications are incorporated by reference in this part?

(a) Certain material is incorporated by reference into this part with the approval of the Director of the Federal Register under 5 U.S.C. 552(a) and 1 CFR part 51. To enforce any edition other than that specified in this section, NARA must publish notice of change in the FEDERAL REGISTER and the material must be available to the public. All approved material is available for inspection at the Office of the Federal Register. For information on the availability of this material at the Office of the Federal Register, call (202) 741–6030 or go to *http://www.archives.gov/federal_register/code_of_federal_regulations/ibr_locations.html*.

(b) The material incorporated by reference is also available for inspection at NARA's Archives Library Information Center (NWCCA), Room 2380, 8601 Adelphi Road, College Park, MD 20740–6001, phone number (301) 837–3415, and is available for purchase from the sources listed below. If you experience difficulty obtaining the standards referenced below, contact NARA's Policy and Planning Staff (NPOL), National Archives and Records Administration, 8601 Adelphi Road, College Park, MD 20740–6001, phone number (301) 837–1850.

(c) *American National Standards Institute (ANSI) and International Organization for Standards (ISO) standards*. The following ANSI and ISO standards are available from the American National Standards Institute, 25 West 43rd St., 4th Floor, New York, NY 10036, phone number (212) 642–4900,or online at *http://webstore.ansi.org*.

(1) ANSI/AIIM MS1–1996 (''ANSI/AIIM MS1''), Standard Recommended Practice for Alphanumeric Computer-Output Microforms—Operational Practices for Inspection and Quality Control, August 8, 1996, IBR approved for § 1238.14.

(2) ANSI/AIIM MS5–R1998) (''ANSI/AIIM MS5''), Standard for Information and Image Management—Microfiche, December, 1998, IBR approved for § 1238.10.

(3) ANSI/AIIM MS14–1996 (''ANSI/AIIM MS14''), Standard Recommended Practice—Specifications for 16mm and 35mm Roll Microfilm, August 8, 1996, IBR approved for § 1238.10.

(4) ANSI/AIIM MS19–1993 (''ANSI/AIIM MS19''), Standard Recommended Practice—Identification of Microforms, August 18, 1993, IBR approved for § 1238.12.

(5) ANSI/AIIM MS32–1996 (''ANSI/AIIM MS32''), Standard Recommended Practice—Microrecording of Engineering Source Documents on 35mm Microfilm, February 16, 1996, IBR approved for § 1238.10.

(6) ANSI/AIIM MS41–1996 (''ANSI/AIIM MS41''), Dimensions of Unitized Microfilm Carriers and Apertures (Aperture, Camera, Copy and Image Cards), July 16, 1996, IBR approved for § 1238.10.

(7) ANSI/AIIM MS43–1998 (''ANSI/AIIM MS43''), Standard Recommended Practice—Operational Procedures—Inspection and Quality Control of Duplicate Microforms of Documents and From COM), June 2, 1998, IBR approved for § 1238.14,

(8) ANSI/AIIM MS45–1990 (''ANSI/AIIM MS 45''), Recommended Practice for Inspection of Stored Silver-Gelatin Microforms for Evidence of Deterioration, January 22, 1990, IBR approved for § 1238.22.

(9) ISO 18911:2000 (''ISO 18911''), Imaging materials—Processed safety photographic films—Storage practices, First Edition, November 1, 2000, IBR approved for § 1238.20.

(d) *Techstreet*. The following standards are available from the standards reseller Techstreet, 3916 Ranchero Drive, Ann Arbor, MI 48108, phone number (800) 699–9277, or online at *www.Techstreet.com*.

(1) ISO 18901:2002 (''ISO 18901''), Imaging Materials—Processed silver-gelatin type black-and-white films—Specifications for stability, February 15, 2002, IBR approved for §§ 1238.10, 1238.14, and 1238.20.

(2) Reserved

(e) *Document Center Inc*. The following are available from the standards reseller the Document Center Inc., 111 Industrial Road, Suite 9, Belmont, CA, 94002, phone number (650) 591–7600, or online at *http://www.document-center.com*.

(1) ANSI/NAPM IT2.19–1994 (''ANSI/NAPM IT2.19), American National Standard for Photography—Density Measurements—Part 2: Geometric Conditions for Transmission Density, February 20, 1995, IBR approved for § 1238.14.

(2) ANSI/PIMA IT9.2–1998 (''ANSI/PIMA IT9.2''), Photographic Processed Films, Plates, and Papers-Filing Enclosures and Storage Containers, April 15, 1998, IBR approved for §§ 1238.10 and 1238.20.

(3) ANSI/AIIM MS 23–1998 (''ANSI/AIIM MS23''), Standard Recommended Practice—Production, Inspection, and Quality Assurance of First-Generation, Silver Microforms of Documents, June 2, 1998, IBR approved for §§ 1238.10 and 1238.14.

(4) ANSI/ISO 3334–1991, ANSI/AIIM MS51–1991 (''ANSI/ISO 3334, ANSI/AIIM MS51''), Micrographics—ISO Resolution Test Chart No. 2—Description and Use, May 10, 1991, IBR approved for § 1238.14.

(5) ANSI/NAPM IT2.18–1996 (''ANSI/NAPM IT2.18''), American National Standard for Photography—Density Measurements—Part 3: Spectral Conditions, March 8, 1996, IBR approved for § 1238.14.

Subpart B—Microfilming Standards

§ 1238.10 What are the format standards for microfilming records?

The following formats must be used when microfilming records:

(a) *Roll film*—(1) *Source documents*. The formats described in ANSI/AIIM MS14 (incorporated by reference, see § 1238.5) must be used for microfilming source documents on 16mm and 35mm roll film. A reduction ratio no greater than 1:24 is recommended for correspondence or similar typewritten documents. Use ANSI/AIIM MS23 (incorporated by reference, see § 1238.5) for the appropriate reduction ratio and format for meeting image quality requirements. When microfilming on 35mm film for aperture card applications, the format dimensions in ANSI/AIIM MS32 (incorporated by reference, see § 1238.5), Table 1 must be used, and the aperture card format ''D Aperture'' shown in ANSI/AIIM MS41 (incorporated by reference, see § 1238.5), Figure 1, must be used. The components of the aperture card, including the paper and adhesive, must conform to the requirements of ANSI/PIMA IT9.2 (incorporated by reference, see § 1238.5). The 35mm film used in the aperture card application must conform to film designated as LE 500 in ISO 18901 (incorporated by reference, see § 1238.5).

(2) *COM*. Microfilm created using computer output microfilm (COM) technology must use the simplex mode described in ANSI/AIIM MS14 (incorporated by reference, see § 1238.5) at an

effective ratio of 1:24 or 1:48 depending upon the application.

(b) *Microfiche*. When creating microfiche, either by microfilming source documents or using COM technology, the formats and reduction ratios prescribed in ANSI/AIIM MS5 (incorporated by reference, see § 1238.5) must be used as specified for the size and quality of the documents being filmed. Use ANSI/AIIM MS23 (incorporated by reference, see § 1238.5) for determining the appropriate reduction ratio and format for meeting the image quality requirements.

(c) *Index placement*—(1) *Source documents*. When microfilming source documents, place indexes, registers, or other finding aids, if microfilmed, either in the first frames of the first roll of film or in the last frames of the last roll of film of a series. For microfiche, place the indexes in the last frames of the last microfiche or microfilm jacket of a series.

(2) *COM*. Place indexes on COM following the data on a roll of film, in the last frames of a single microfiche, or in the last frames of the last fiche in a series. Other locations for indexes may be used only if dictated by special system constraints.

§ 1238.12 What documentation is required for microfilmed records?

Agencies must ensure that the microforms capture all information contained on the source documents and that they can be used for the purposes the source documents served. Microform records must be labeled and organized to support easy retrieval and use. Agencies must:

(a) Arrange, describe, and index the filmed records to permit retrieval of any particular document or component of the records.

(b) Title each microform roll or fiche with a titling target or header. For fiche, place the titling information in the first frame if the information will not fit on the header. At a minimum, titling information must include:

(1) The title of the records;

(2) The number or identifier for each unit of microform;

(3) The security classification, if any; and

(4) The name of the agency and suborganization, the inclusive dates, names, or other data identifying the records to be included on a unit of microform.

(c) Add an identification target showing the date of microfilming. When necessary to give the microform copy legal standing, the target must also identify the person who authorized the microfilming. Use ANSI/AIIM MS19 (incorporated by reference, see § 1238.5) for standards for identification targets.

§ 1238.14 What are the microfilming requirements for permanent and unscheduled records?

(a) Agencies must apply the standards in this section when microfilming:

(1) Permanent paper records where the original paper record will be destroyed (only after authorization from NARA);

(2) Unscheduled paper records where the original paper record will be destroyed (only after authorization from NARA); and

(3) Permanent and unscheduled original microform records (no paper originals) produced by automation, such as COM.

(b) Agencies must use polyester-based silver gelatin type film that conforms to ISO 18901 (incorporated by reference, see § 1238.5) for LE 500 film in all applications.

(c) Agencies must process microforms so that the residual thiosulfate ion concentration will not exceed 0.014 grams per square meter in accordance with ISO 18901 (incorporated by reference, see § 1238.5) and use the processing procedures in ANSI/AIIM MS1 and ANSI/AIIM MS23 (both incorporated by reference, see § 1238.5).

(d) Agencies must use the following standards for quality:

(1) *Resolution*—(i) *Source documents*. Agencies must determine minimum resolution on microforms of source documents using the method in the Quality Index Method for determining resolution and anticipated losses when duplicating, as described in ANSI/AIIM MS23 and ANSI/AIIM MS43 (both incorporated by reference, see § 1238.5). Agencies must perform resolution tests using an ANSI/ISO 3334 Resolution Test Chart (incorporated by reference, see

§ 1238.5) or a commercially available certifiable target manufactured to comply with this standard, and read the patterns following the instructions of ANSI/ISO 3334. Agencies must use the smallest character used to display information to determine the height used in the Quality Index formula. Agencies must use a Quality Index of five at the third generation level.

(ii) *COM*. COM must meet the requirements of ANSI/AIIM MS1 (incorporated by reference, see § 1238.5).

(2) *Background density of images*. Agencies must use the background ISO standard visual diffuse transmission density on microforms appropriate to the type of documents being filmed. Agencies must use the procedure for density measurement described in ANSI/AIIM MS23 (incorporated by reference, see § 1238.5). The densitometer must meet with ANSI/NAPM IT2.18 (incorporated by reference, see § 1238.5) for spectral conditions and ANSI/NAPM IT2.19 (incorporated by reference, see § 1238.5) for geometric conditions for transmission density.

(i) Recommended visual diffuse transmission background densities for images of documents are as follows:

Classification	Description of document	Background density
Group 1	High-quality, high contrast printed book, periodicals, and black typing	1.3–1.5
Group 2	Fine-line originals, black opaque pencil writing, and documents with small high contrast printing.	1.15–1.4
Group 3	Pencil and ink drawings, faded printing, and very small printing, such as footnotes at the bottom of a printed page.	1.0–1.2
Group 4	Low-contrast manuscripts and drawing, graph paper with pale, fine-colored lines; letters typed with a worn ribbon; and poorly printed, faint documents.	0.8–1.0
Group 5	Poor-contrast documents (special exception).	0.7–0.85

(ii) Recommended visual diffuse transmission densities for computer generated images are as follows:

Film type	Process	Density measurement method	Min. Dmax [1]	Max. Dmin [1]	Minimum density difference
Silver gelatin	Conventional	Printing or diffuse	0.75	0.15	0.60
Silver gelatin	Full reversal	Printing	1.50	0.20	1.30

[1] Character or line density, measured with a microdensitometer or by comparing the microfilm under a microscope with an image of a known density.

(3) *Base plus fog density of microfilms*. The base plus fog density of unexposed, processed microfilms must not exceed 0.10. When a tinted base film is used, the density will be increased. The difference must be added to the values given in the tables in paragraph (d)(2) of this section.

(4) *Line or stroke width*. Due to optical limitations in most micrographic systems, microfilm images of thin lines appearing in the source documents will tend to fill in as a function of their width and density. Therefore, as the reduction ratio of a given system is increased, reduce the background density as needed to ensure that the copies will be legible.

§ 1238.16 What are the microfilming requirements for temporary records, duplicates, and user copies?

(a) *Temporary records with a retention period over 99 years*. Agencies must use the microfilming requirements in § 1238.14.

(b) *Temporary records to be kept for less than 99 years, duplicates, and user copies*. NARA does not require the use of specific standards for these microforms. Agencies may select a film stock that meets their needs and ensures the preservation of the microforms for their full retention period. NARA recommends that agencies consult appropriate standards, available as noted in § 1238.3, and manufacturer's instructions for processing production, and

maintenance of microform to ensure that the images are accessible and usable for the entire retention period of the records.

Subpart C—Storage, Use, and Disposition of Microform Records

§ 1238.20 How must microform records be stored?

(a) *Permanent and unscheduled records.* Agencies must store permanent and unscheduled microform records under the extended term storage conditions specified in ISO 18911 and ANSI/PIMA IT9.2 (both incorporated by reference, see § 1238.5), except that the relative humidity of the storage area must be a constant 35 percent RH, plus or minus 5 percent. Non-silver copies of microforms must be maintained in a different storage area than are silver gelatin originals or duplicate copies).

(b) *Temporary records.* Agencies must store temporary microform records under conditions that will ensure their preservation for their authorized retention period. NARA suggests that agencies may consult Life Expectance (LE) guidelines in ISO 18901 (incorporated by reference, see § 1238.5).

§ 1238.22 What are the inspection requirements for permanent and unscheduled microform records?

(a) Agencies must inspect, or arrange for a contractor or NARA to inspect master microform of permanent or unscheduled records following the inspection requirements in paragraph (b) of this section.

(b) The microforms listed in paragraph (a) of this section must be inspected initially in accordance with ANSI/AIIM MS45 (incorporated by reference, see § 1238.5). All microforms must be inspected when they are two years old. After the initial two-year inspection, unless there is a catastrophic event, the microforms must be inspected as follows until they are transferred to NARA:

(1) For microfilm produced after 1990, inspect the microfilm every 5 years.

(2) For microfilm produced prior to 1990, inspect the microfilm every 2 years.

(c) To facilitate inspection, the agency must maintain an inventory that lists each microform series or publication by production date, producer, processor, format, and results of previous inspections.

(d) The inspection must include the following elements:

(1) An inspection for aging blemishes following ANSI/AIIM MS45 (incorporated by reference, see § 1238.5);

(2) A rereading of resolution targets;

(3) A remeasurement of density; and

(4) A certification of the environmental conditions under which the microforms are stored, as specified in § 1238.20(a).

(e) The agency must prepare an inspection report, and send a copy to NARA in accordance with § 1238.28(c). The inspection report must contain:

(1) A summary of the inspection findings, including:

(i) A list of batches by year that includes the identification numbers of microfilm rolls and microfiche in each batch;

(ii) The quantity of microforms inspected;

(iii) An assessment of the overall condition of the microforms;

(iv) A summary of any defects discovered, e.g., redox blemishes or base deformation; and

(v) A summary of corrective actions taken.

(2) A detailed inspection log created during the inspection that contains the following information:

(i) A complete description of all records inspected (title; roll or fiche number or other unique identifier for each unit of film inspected; security classification, if any; and inclusive dates, names, or other data identifying the records on the unit of film);

(ii) The date of inspection;

(iii) The elements of inspection (see paragraph (d) of this section);

(iv) Any defects uncovered; and

(v) The corrective action taken.

(f) If an inspection finds that a master microform is deteriorating, the agency must make a silver duplicate in accordance with § 1238.14 to replace the deteriorating master. The duplicate microform must meet inspection requirements (see § 1238.22) before it may be transferred to a record center or NARA.

(g) Inspections must be conducted in environmentally controlled areas in accordance with ANSI/AIIM MS45 (incorporated by reference, see § 1238.5).

§ 1238.24 What are NARA inspection requirements for temporary microform records?

NARA recommends, but does not require, that agencies use the inspection procedures described in § 1238.22(a).

§ 1238.26 What are the restrictions on use for permanent and unscheduled microform records?

(a) Agencies must not use the silver gelatin master microform or duplicate silver gelatin microform of permanent or unscheduled records created in accordance with § 1238.14 of this part for reference purposes. Agencies must ensure that the master microform remains clean and undamaged during the process of making a duplicating master.

(b) Agencies must use duplicates for:

(1) Reference;

(2) Further duplication on a recurring basis;

(3) Large-scale duplication; and

(4) Distribution of records on microform.

(c) Agencies retaining the original record in accordance with an approved records disposition schedule may apply agency standards for the use of microform records.

§ 1238.28 What must agencies do when sending permanent microform records to a records storage facility?

Agencies must:

(a) Follow the procedures in part 1232 of this chapter and the additional requirements in this section.

(b) Package non-silver copies separately from the silver gelatin original or silver duplicate microform copy and clearly label them as non-silver copies.

(c) Include the following information on the transmittal (SF 135 for NARA Federal Records Centers), or in an attachment to the transmittal. For records sent to an agency records center or commercial records storage facility, submit this information to NARA as part of the documentation required by § 1232.14 of this subchapter:

(1) Name of the agency and program component;

(2) The title of the records and the media and format used;

(3) The number or identifier for each unit of microform;

(4) The security classification, if any;

(5) The inclusive dates, names, or other data identifying the records to be included on a unit of microform;

(6) Finding aids that are not contained in the microform; and

(7) The inspection log forms and inspection reports required by § 1238.22(e).

(d) Agencies may transfer permanent microform records to a records storage facility meeting the storage requirements in § 1232.14(a) (see § 1233.10 of this subchapter for NARA Federal Records Centers) of this subchapter only after the first inspection or with certification that the microforms will be inspected by the agency, a contractor, or a NARA Federal Records Center (on a reimbursable basis) when the microforms become 2 years old.

§ 1238.30 What must agencies do when transferring permanent microform records to the National Archives of the United States?

Agencies must:

(a) Follow the procedures in part 1235 of this subchapter and the additional requirements in this section.

(b) If the records are not in a NARA Federal Records Center, submit the information specified in § 1232.14(c) of this subchapter.

(c) Transfer the silver gelatin original (or duplicate silver gelatin microform created in accordance with § 1238.14) plus one microform copy.

(d) Ensure that the inspections of the microforms are up-to-date. NARA will not accession permanent microform records until the first inspection has been performed (when the microforms are 2 years old).

(e) Package non-silver copies separately from the silver gelatin original or silver duplicate microform copy and clearly label them as non-silver copies.

§ 1238.32 Do agencies need to request NARA approval for the disposition of all microform and source records?

(a) *Permanent or unscheduled records.* Agencies must schedule both source

documents (originals) and microforms. NARA must approve the schedule, SF 115, Request for Records Disposition Authority, in accordance with part 1225 of this subchapter before any records, including source documents, may be destroyed.

(1) Agencies that comply with the standards in § 1238.14 must include on the SF 115 the following certification: ''This certifies that the records described on this form were (or will be) microfilmed in accordance with the standards set forth in 36 CFR part 1238.''

(2) Agencies using microfilming methods, materials, and procedures that do not meet the standards in § 1238.14(a) must include on the SF 115 a description of the system and standards used.

(3) When an agency intends to retain the silver original microforms of permanent records and destroy the original records, the agency must certify in writing on the SF 115 that the microform will be stored in compliance with the standards of § 1238.20 and inspected as required by § 1238.22.

(b) *Temporary records.* Agencies do not need to obtain additional NARA approval when destroying scheduled temporary records that have been microfilmed. The same approved retention period for temporary records is applied to microform copies of these records. The original records can be destroyed once microfilm is verified, unless legal or other requirements prevent their early destruction.

PART 1239—PROGRAM ASSISTANCE AND INSPECTIONS

Subpart A—General

Sec.
1239.1 What is the scope of this part?
1239.2 What are the authorities for part 1239?
1239.3 What definitions apply to this part?
1239.4 What standards are used as guidance for this part?

Subpart B—Program Assistance

1239.10 What program assistance does NARA provide?
1239.12 Whom may agencies contact to request assistance?

Subpart C—Inspections

1239.20 When will NARA undertake an inspection?
1239.22 How does NARA notify the agency of the inspection?
1239.24 How does NARA conduct an inspection?
1239.26 What are an agency's follow up obligations for an inspection report?

AUTHORITY: 44 U.S.C. 2904 and 2906.

SOURCE: 74 FR 51014, Oct. 2, 2009, unless otherwise noted.

Subpart A—General

§ 1239.1 What is the scope of this part?

NARA's statutory authorities include assisting agencies in carrying out their records management responsibilities and, when necessary, inspecting agency programs and reporting to Congress on those inspections. Part 1239 identifies the types of records management guidance and program assistance NARA provides to agencies under its 44 U.S.C. chapter 29 mandate; the conditions under which NARA will invoke its inspection authority, also under chapter 29; and the requirements for agencies to cooperate fully in such inspections.

§ 1239.2 What are the authorities for part 1239?

The authorities for this part are 44 U.S.C. 2904 and 2906.

§ 1239.3 What definitions apply to this part?

(a) See § 1220.18 of this subchapter for definitions of terms used in part 1239.

(b) As used in part 1239—

Inspection means a formal review and report by NARA under 44 U.S.C. 2904(c) and 2906(a) of an agency's recordkeeping processes that focus on significant records management problems affecting records at risk that meet one or more of the following criteria:

(1) Have a direct and high impact on legal rights or government accountability;

(2) Are the subject of high profile litigation, Congressional attention, or widespread media coverage;

(3) Have high research potential; or

(4) Are permanent records with a large volume, regardless of format.

§ 1239.4 What standards are used as guidance for this part?

These regulations conform with guidance provided in ISO 15489–1:2001. Paragraphs 7.1, Principles of records management programmes, and 10, Monitoring and auditing, apply to this part.

Subpart B—Program Assistance

§ 1239.10 What program assistance does NARA provide?

(a) NARA publishes handbooks, conducts workshops and other training sessions, and furnishes information and guidance to Federal agencies about the creation of records, their maintenance and use, and their disposition. NARA also may conduct a targeted assistance project in cooperation with an agency to address a serious records management issue in the agency.

(b) Information on NARA handbooks and guidance is available at *http://www.archives.gov/records-mgmt/*.

(c) Information on NARA training is available at *http://www.archives.gov/records-mgmt/training/*.

§ 1239.12 Whom may agencies contact to request program assistance?

Agencies in the Washington, DC, area desiring information or assistance related to any of the areas covered by subchapter B may contact the National Archives and Records Administration, Life Cycle Management Division (NWML), 8601 Adelphi Rd., College Park, MD 20740–6001, phone number 301–837–1738. Agency field organizations may contact the appropriate NARA Regional Administrator regarding records management assistance, including for records in or scheduled for transfer to the records center or the archival operations within the region.

Subpart C—Inspections

§ 1239.20 When will NARA undertake an inspection?

NARA may undertake an inspection when an agency fails to address specific records management problems involving high risk to significant records. Problems may be identified through a risk assessment or through other means, such as reports in the media, Congressional inquiries, allegations of unauthorized destruction, reports issued by the GAO or an agency's Inspector General, or observations by NARA staff members. Inspections will be undertaken when other NARA program assistance efforts (see § 1239.10) have failed to mitigate situations where there is a high risk of loss of significant records, or when NARA agrees to a request from the agency head that NARA conduct an inspection to address specific significant records management issues in the agency. NARA reports to Congress and the Office of Management and Budget on inspections in accordance with 44 U.S.C. 2904.

§ 1239.22 How does NARA notify the agency of the inspection?

(a) Once NARA identifies the need to conduct an agency inspection, the Archivist of the United States sends a letter to the head of the agency. If the agency being inspected is a component of a cabinet department, the letter will be addressed to the head of the component, with a copy sent to the head of the department. NARA will also send copies to the agency's records officer. The letter will include:

(1) Notification that NARA intends to conduct an inspection, the records that will be inspected, and the issues to be addressed;

(2) A beginning date for the inspection that is no more than 30 days after the date of the letter; and

(3) A request that the agency appoint a point of contact who will assist NARA in conducting the inspection.

(b) If the agency does not respond to NARA's notification letter, NARA will use its statutory authority under 44 U.S.C. 2904(c)(8) to report the matter to the agency's congressional oversight committee and to the Office of Management and Budget.

§ 1239.24 How does NARA conduct an inspection?

(a) The NARA inspection team leader will coordinate with the agency point of contact to arrange an initial meeting with the agency. The initial meeting will address such matters as the parameters of the inspection, any surveys or other inspection instruments, the

offices to be visited, and the timing of site visits.

(b) After the inspection is complete, NARA will prepare a draft inspection report and transmit it to the agency within 45 calendar days of the last site visit. The report will include:

(1) An executive summary;

(2) Background and purpose of inspection;

(3) Inspection methodology, including offices visited;

(4) Findings;

(5) Corrective actions needed and other recommendations; and

(6) Any necessary appendixes, such as summaries of each site visit or the inspection instrument.

(c) The draft report is sent to the agency for review, with a response deadline of 45 days.

(d) NARA will incorporate any necessary corrections or revisions in the final report and issue the report to the head of the agency within 45 days.

§ 1239.26 What are an agency's follow up obligations for an inspection report?

The agency must submit a plan of corrective action that specifies how the agency will address each inspection report recommendation, including a timeline for completion, and proposed progress reporting dates. The agency must submit the plan of corrective action to NARA within 60 days of transmission of the final report. NARA may take up to 60 days to review and comment on the plan. Once the plan is agreed upon by both sides, agencies must submit progress reports to NARA until all actions are completed.

PARTS 1240–1249 [RESERVED]

SUBCHAPTER C—PUBLIC AVAILABILITY AND USE

PART 1250—NARA RECORDS SUBJECT TO FOIA

Subpart A—General Information About Freedom of Information Act (FOIA) Requests

Sec.
1250.1 Scope of this part.
1250.2 Presumption of Openness and Proactive Disclosures.
1250.3 Definitions.
1250.4 Who can file a FOIA request?
1250.6 Does FOIA apply to all of the records at NARA?
1250.8 Does NARA provide access under FOIA to all the executive branch records housed at NARA facilities?
1250.10 Do I need to use FOIA to gain access to records at NARA?
1250.12 What types of records are available in NARA's FOIA library?
1250.14 Preservation of FOIA-related materials.

Subpart B—How To Request Records Under FOIA

1250.20 What do I include in my FOIA request?
1250.22 Where do I send my FOIA request?
1250.24 Does NARA accept electronic FOIA requests?
1250.26 How does NARA process my FOIA request?
1250.27 How does NARA determine estimated completion dates for FOIA requests?
1250.28 How do I request expedited processing?
1250.30 How does NARA respond to my request?
1250.32 How may I request assistance with the FOIA process?
1250.38 In what format does NARA provide copies?

Subpart C—Fees

1250.50 General information on fees for all FOIA requests.
1250.51 What fee policies apply to archival records?
1250.52 What fee policies apply to operational records?
1250.53 What is the FOIA fee schedule for operational records?
1250.54 How does NARA calculate FOIA fees for operational records?
1250.56 How may I request a fee waiver for operational records?

Subpart D—Appeals

1250.70 When may I appeal NARA's FOIA determination?
1250.72 How do I file an appeal?
1250.74 How does NARA process appeals?

Subpart E—Confidential Commercial Information

1250.80 How does a submitter identify records containing confidential commercial information?
1250.82 How does NARA process FOIA requests for confidential commercial information?

AUTHORITY: 44 U.S.C. 2104(a) and 2204(3)(c)(1); 5 U.S.C. 552; E.O. 13526; E.O. 12600; 52 FR 23781; 3 CFR, 1987 Comp., p. 235.

Subpart A—General Information About Freedom of Information Act (FOIA) Requests

SOURCE: 79 FR 56504, Sept. 22, 2014, unless otherwise noted.

§ 1250.1 Scope of this part.

This part implements the provisions of the Freedom of Information Act (FOIA), 5 U.S.C. 552, as amended, for NARA operational records and archival records that are subject to FOIA. This part contains the rules that we follow to process FOIA requests, such as the amount of time we have to make a determination regarding the release of records and what fees we may charge. Other NARA regulations in 36 CFR parts 1254 through 1275 provide detailed guidance for conducting research at NARA.

§ 1250.2 Presumption of Openness and Proactive Disclosures.

NARA, consistent with its core mission, has always been committed to providing public access to as many of our records as possible. We therefore continue to affirmatively release and post records, or descriptions of such records, on our Web site at *www.archives.gov* in the absence of any FOIA request. We proactively identify and make discretionary disclosures of additional records of interest to the public whenever possible.

§ 1250.3 Definitions.

The following definitions apply to this part:

(a) *Archival records* means permanently valuable records of the United States Government that have been transferred to the legal custody of the Archivist of the United States. These are historical documents and do not include NARA operational records as defined in paragraph (l) of this section.

(b) *Commercial use request* means a request that asks for information for a use or purpose that furthers a commercial, trade, or profit interest of the requester or the person or entity on whose behalf the request is made.

(c) *Confidential commercial information* means records provided by a submitter that may contain trade secrets or confidential business or financial information that is exempt from release under the FOIA because disclosure could reasonably be expected to cause the submitter substantial competitive harm.

(d) *Educational institution request* means a request made by a school, university, or other educational institution that operates a program of scholarly research. To qualify for this category, a requester must show that the request is authorized by, and is made under the auspices of, a qualifying institution and that the records are sought to further scholarly research, not for a commercial use.

(e) *Expedited processing* means the process set forth in the FOIA that allows requesters to ask for faster processing of their FOIA request if they can demonstrate a specific compelling need.

(f) *Fee category* means one of the four categories set forth in the FOIA to determine whether a requester will be charged fees for search, review, and duplication. The categories are: Commercial requesters; non-commercial scientific or educational institutions; news media requesters; and all other requesters.

(g) *Fee waiver* means the waiver or reduction of fees if a requester is able to demonstrate that certain standards set forth in the FOIA are satisfied, including that the information is in the public interest and is not requested for a commercial interest.

(h) *FOIA Public Liaison* means an agency official who is responsible for assisting in reducing delays, increasing transparency and understanding of the status of requests, and assisting in the resolution of disputes.

(i) *FOIA request* means a written request, that cites the Freedom of Information Act, for access to NARA operational records, records of the executive branch of the Federal Government held by NARA, or Presidential or Vice Presidential records in NARA's custody that were created after January 19, 1981.

(j) *Freedom of Information Act (FOIA)* means the law codified at 5 U.S.C. 552 that provides the public with the right to request Government records from Federal executive branch agencies.

(k) *Non-commercial scientific institution request* means a request submitted by an institution that is not operated on a basis that furthers the commercial, trade, or profit interests of any person or organization, and which is operated solely for the purpose of conducting scientific research.

(l) *Operational records* means records that NARA creates or receives in carrying out our mission and responsibilities as an executive branch agency. This does not include archival records as defined in paragraph (a) of this section.

(m) *Original Classification Authority* means the authority to classify information as National Security Information at creation, as granted by the President of the United States in Executive Order 13526, section 1.3, and defined in 32 CFR part 2001.

(n) *Other request* means a request submitted by any individual whose request does not qualify as a commercial-use request, representative of the news media request (including a request made by a freelance journalist), or an educational or non-commercial scientific institution request.

(o) *Presidential records* means the official Presidential and Vice Presidential records created or received by the President, the Vice President, or the White House staff since January 20, 1981, and covered under the Presidential Records Act, 44 U.S.C. 2201–2207. Presidential Executive orders also apply to these records.

(p) *Presidential Records Act* (PRA) means the law that, in part, governs access to Presidential and Vice Presidential records and is codified at 44 U.S.C. 2201–2207 and Part 1270 of these regulations. The PRA contains six restrictions that authorize NARA to withhold information, which apply for 12 years after a President leaves office. Four of the PRA restrictions are identical to FOIA Exemptions 1, 3, 4, and 6. Two relate to appointments to Federal office and confidential communications requesting or submitting advice between the President and his advisers, or between and among such advisers. The PRA also excludes application of FOIA Exemption 5.

(q) *Representative of the news media* means a person or entity that is organized and operated to publish or broadcast news to the public, and that actively gathers information of potential interest to a segment of the public, uses its editorial skills to turn raw materials into a distinct work, and distributes that work to an audience. The term ''news'' means information that is about current events or that would be of current interest to the public. Examples of news media entities include television or radio stations that broadcast news to the public at large and publishers of periodicals, including print and online publications that disseminate news and make their products available through a variety of means to the general public. We consider requests for records that support the news-dissemination function of the requester to be a non-commercial use. We consider ''freelance'' journalists who demonstrate a solid basis for expecting publication through a news media entity as working for that entity. A publishing contract provides the clearest evidence that a journalist expects publication; however, we also consider a requester's past publication record. We decide whether to grant a requester media status on a case-by-case basis, based on the requester's intended use.

(r) *Review* means examining documents responsive to a request to determine whether any portions of them are exempt from disclosure. Review time includes processing any record for disclosure (i.e., doing all that is necessary to prepare the record for disclosure), including redacting the record and marking the appropriate FOIA exemptions.

(s) *Search* means the process of looking for and retrieving records or information responsive to a request. It also includes reasonable efforts to locate and retrieve information from records maintained in electronic form or format.

(t) *Submitter* means any person or entity providing potentially confidential commercial information to an agency, which information may be subject to a FOIA request. The term submitter includes, but is not limited to, individuals, corporations, state governments, and foreign governments.

§ 1250.4 Who can file a FOIA request?

Any individual, partnership, corporation, association, or public or private organization other than a Federal agency, regardless of nationality, may file a FOIA request with NARA. The Administrative Procedure Act, 5 U.S.C. 551(2), excludes Federal agencies from filing FOIA requests. However, state and local governments may file FOIA requests.

§ 1250.6 Does the FOIA apply to all of the records at NARA?

No, the FOIA applies only to the records of the executive branch of the Federal Government and certain Presidential and Vice Presidential records:

If you want access to . . .	Then access is governed by . . .
(a) Records of executive branch agencies	This CFR part and parts 1254 through 1260 of this chapter. FOIA applies to these records.
(b) Records of the Federal courts and judicial branch agencies.	Parts 1254 through 1260 of this chapter. FOIA does not apply to these records.
(c) Records of Congress and legislative branch agencies.	Parts 1254 through 1260 of this chapter. FOIA does not apply to these records.
(d) Presidential records (created by Presidents and Vice Presidents holding office since 1981).	This part and parts 1254 through 1270 of this chapter. FOIA applies to these records five years after the President and Vice President leave office.

If you want access to . . .	Then access is governed by . . .
(e) Documents created by Presidents holding office before 1981 and housed in a NARA Presidential library.	The deed of gift under which they were given to NARA. These documents are not agency records and FOIA does not apply to these materials.
(f) Nixon Presidential materials	Part 1275 of this chapter. FOIA does not apply to these materials.

§ 1250.8 Does NARA provide access under FOIA to all the executive branch records housed at NARA facilities?

(a) NARA provides access under FOIA to the records NARA creates (*operational* records) and records originating in the executive branch that have been transferred to the legal custody of the Archivist of the United States (*archival* records).

(b) NARA's National Personnel Records Center (NPRC), located in St. Louis, Missouri, is the repository for twentieth-century personnel and medical records of former members of the military and personnel records of former civilian employees of the Federal Government.

(1) Those official personnel and medical files that have been transferred to NARA's legal custody, which occurs 62 years after the date of an employee's or veteran's separation from Federal service, are processed by NARA according to this part, at §§ 1250.20 through 1250.32.

(2) Those personnel and medical records that remain in the legal custody of the agencies that created them are governed by the FOIA and other access regulations of the originating agencies, which the NPRC processes under authority delegated by the originating agencies, not under the provisions of this part. Because of the intricacies of other agencies' FOIA regulations, further explanation here is not feasible. More information about the NPRC processes, including access to NPRC records, is available on NARA's Web site at *http://www.archives.gov/st-louis/military-personnel/* and at *http://www.archives.gov/st-louis/civilian-personnel*.

(c) NARA's Federal records centers store records that agencies no longer need for day-to-day business. These records remain in the legal custody of the agencies that created them. Requests for access to another agency's records in a NARA Federal records center should be made directly to the originating agency. We do not process FOIA requests for these records.

(d) If your FOIA request includes a record in the legal custody of an originating agency, we forward that request to the originating agency for processing. We also provide you with notification that we have done so and with contact information for the originating agency. (See 36 CFR 1256.2 for more information about how to access records that are stored in Federal records centers.)

§ 1250.10 Do I need to use FOIA to gain access to records at NARA?

(a) Most *archival* records held by NARA have no restrictions to access and are available to the public for research without filing a FOIA request. You may either visit a NARA facility as a researcher to view and copy records or you may write to request copies of specific records. (See subpart B of 36 CFR part 1256 for more information about how to access archival records).

(b) If you are seeking access to *archival* records that are not yet available to the public, you need to file a FOIA request. (See 36 CFR 1256.22 for information on how to request access to restricted archival records. See paragraph (d) of this section, and part 1260, for additional procedures on access to classified records.)

(c) You must also file a FOIA request when you request access to NARA *operational* records (records NARA creates) that are not already available to the public.

(d) If you are requesting records that you know are classified to protect national security interests, you may wish to use the Mandatory Declassification Review process, which is set forth at 36 CFR 1260.70. (Please see NARA's FOIA Guide, available online at *http://www.archives.gov/foia/foia-guide.html*, for the differences between the FOIA

and Mandatory Declassification Review access processes.)

§ 1250.12 What types of records are available in NARA's FOIA library?

(a) We make available certain materials (listed in the FOIA) for public inspection and copying in both our physical FOIA Library as well as on NARA's Web site, available at *http://www.archives.gov/foia/electronic-reading-room.html*.

(b) The materials provided through NARA's FOIA Library include:

(1) Final NARA orders;

(2) Written statements of NARA policy which are not published in the FEDERAL REGISTER;

(3) Operational staff manuals and instructions to staff that affect members of the public;

(4) At our discretion, copies of operational records requested three or more times under FOIA and other records that have been, or are likely to become, the subject of subsequent FOIA requests for substantially the same records;

(5) An index, updated quarterly, to these materials; and

(6) FOIA logs including opening and closing date, requester's and organization's name, description of the records, and final disposition.

(c) You may inspect and copy these materials during normal working hours at the NARA facility where the records are located. See 36 CFR part 1253 and NARA's Web site at *http://www.archives.gov/* for locations and research room procedures.

(d) You may also access much of these materials on the NARA Web site. Any of these materials created after October 31, 1996, are on NARA's Web site at *http://www.archives.gov/foia/electronic-reading-room.html*.

(e) For a paper copy of the index to these online materials, write to: NARA FOIA Officer (NGC); Room 3110; National Archives and Records Administration; 8601 Adelphi Road; College Park, MD 20740–6001.

§ 1250.14 Preservation of FOIA-related records.

Each NARA component preserves all correspondence pertaining to the requests that it receives under this part, as well as copies of all requested records, until Title 44 of the United States Code or NARA's General Records Schedule 14 authorizes disposition or destruction. Records will not be disposed of while they are the subject of a pending request, appeal, or lawsuit under the FOIA.

Subpart B—How To Request Records Under FOIA

§ 1250.20 What do I include in my FOIA request?

In your FOIA request:

(a) Describe the records you seek in sufficient detail to enable NARA staff to locate them with a reasonable amount of effort. The more information you provide, the better possibility NARA has of finding the records you are seeking. Information that will help NARA find the records includes:

(1) The agencies, offices, or individuals involved;

(2) The approximate date(s) when the records were created;

(3) The subject, title, or description of the records sought; and

(4) Author, recipient, case number, file designation, or reference number.

(b) Include your name and full mailing address as well as phone number and email address. This information allows us to reach you faster if we have any questions about your request. It is your responsibility to keep your current mailing address up to date with the office where you have filed the FOIA request.

(c) If you request records about yourself, you must do so in accordance with the Privacy Act and our implementing regulations at 36 CFR part 1202. This includes requirements to verify your identity (see 36 CFR 1202.40). If you request records about someone other than yourself, you may receive greater access if you submit either a notarized document signed by the other person that certifies their identity and gives their permission for you to have access, or proof that the other person is deceased (e.g., a copy of a death certificate or an obituary). NARA may, at its discretion, require you to supply additional information if necessary to verify that a particular individual has

consented to disclosure of records about them.

(d) Mark both your letter and envelope, or the subject line of your email, with the words ''FOIA Request.''

(e) Before filing your request, you may find it helpful to consult NARA's ''Freedom of Information Act Reference Guide''—which is available electronically at *http://www.archives.gov/foia/foia-guide.html*, and in paper form. For a paper copy of NARA's FOIA Guide, write to: NARA FOIA Officer (NGC); Room 3110; National Archives and Records Administration; 8601 Adelphi Road; College Park, MD 20740–6001. For additional information about the FOIA, you may refer directly to the statute at 5 U.S.C. 552 or visit *http://www.foia.gov*.

§ 1250.22 Where do I send my FOIA request?

(a) NARA has several FOIA Customer Service Centers that process FOIA requests. You should send your FOIA request to the appropriate FOIA Customer Service Center that you believe would have the records you seek:

For:	Mail/submit request to or call:
(1) Archival records located in the Washington, DC, area . . .	Chief, Special Access and FOIA Staff (RD–F), Room 5500, National Archives and Records Administration, 8601 Adelphi Road, College Park, MD 20740–6001 OR by e-mail to *Specialaccess_foia@nara.gov*.
(2) Archival records maintained in other parts of the country . . .	. . . the director of the facility in which the records are located. You can find locations and contact information for NARA facilities at *http://www.archives.gov/locations/* or 36 CFR 1253.5.
(3) Presidential records subject to FOIA	. . . the director of the Presidential library in which the records are located. You can find locations and contact information for NARA's Presidential libraries at *http://www.archives.gov/locations/* or 36 CFR 1253.3.
(4) Operational records of any NARA unit except the Office of the Inspector General . . .	NARA FOIA Officer (NGC), Room 3110, National Archives and Records Administration, 8601 Adelphi Road, College Park, MD 20740–6001 OR by email to *FOIA@nara.gov* OR online at *https://foiaonline.regulations.gov*.
(5) Operational records of the Office of the Inspector General . . .	Office of the Inspector General (OIG), FOIA Request, Room 1300, National Archives and Records Administration, 8601 Adelphi Road, College Park, MD 20740–6001.
(6) Any other records, or if you are unable to determine where to send your request or if you do not have access to the internet for a list of NARA's FOIA (7) Public Liaisons and Customer Service Centers . . .	NARA FOIA Officer (NGC), Room 3110, National Archives and Records Administration, 8601 Adelphi Road, College Park, MD 20740–6001 OR call (301) 837–FOIA (3642) ** Within 10 working days of receiving a request, this office will forward your request to the office(s) that is likely to have the records you are seeking.

(b) NARA officially receives your request when it reaches the proper office's FOIA staff, but no later than 10 working days after the request first arrives at one of the offices in the table above. Receipt by the appropriate office initiates the time period for responding to your request (see 36 CFR 1250.26).

(c) If you have questions concerning the processing of your FOIA request, you may contact the designated FOIA Customer Service Center for the facility processing your request. If that initial contact does not resolve your concerns, you may wish to contact the designated FOIA Public Liaison for the facility processing your request. You can find a list of NARA's FOIA Customer Service Centers and Public Liaisons at *http://www.archives.gov/foia/contacts.html*.

§ 1250.24 Does NARA accept electronic FOIA requests?

Yes. You may submit and track requests for NARA *operational* records through the *FOIAonline* program, accessible at *https://foiaonline.regulations.gov*, or by sending an email to *FOIA@nara.gov*. The body of the message must contain all of the information listed in 36 CFR 1250.20. You may also file a FOIA request by emailing your request to the offices listed in the table at 36 CFR 1250.22.

§ 1250.26 How does NARA process my FOIA request?

(a) *Acknowledgement*. NARA acknowledges all FOIA requests in writing within 20 working days after receipt by the appropriate office (see 36 CFR 1250.22). The acknowledgement letter or email informs you of your request tracking number, and any complexity

in processing that may lengthen the time NARA requires to reach a final decision on the release of the records. The acknowledgement letter or email may also seek additional information to clarify your request or to ask you to narrow the scope of a very large or broad request.

(b) *Clarification of requests.* Requests must reasonably describe the records sought. If we determine that a request does not reasonably describe the records sought, or if we are uncertain about another aspect of the request, we contact you to ask for clarification.

(c) *Search cut-off date.* As the end or cut-off date for a records search, NARA uses the date on which we first begin our search for documents responsive to your request, unless you specify an earlier cut-off date. This includes those cases when you request records ''through the present,'' ''through today,'' or similar language. If NARA uses any other search end date, we inform you of that date.

(d) *Stops in processing time, clarification requests, and administrative closure.* NARA may stop the clock for processing a request one time in order to seek your clarification. In such a case, the processing time resumes upon our receipt of your response. We provide at least 60 calendar days for you to respond to a request for clarification. If you do not clarify the request within 60 calendar days, we deny the request for not reasonably describing the records sought and provide you with the opportunity to appeal under the procedures in Subpart D. Should you not answer any correspondence, or should the correspondence be returned as undeliverable, NARA reserves the right to administratively close the FOIA request 60 calendar days after the date of the last correspondence we send.

(e) *Confidential commercial information.* If you have requested records containing confidential commercial information, refer to 36 CFR 1250.82 for information on how we process that request.

(f) *Processing queues.* NARA places FOIA requests in simple or complex processing queues to be processed in the order received, on a first-in, first-out basis. In most cases, we make a determination about release of the records you requested within 20 working days from when the appropriate office receives your request (simple queue processing). However, if complexity or unusual circumstances prevent NARA from making a decision within 20 working days, we place your request into a complex processing queue. This way, such cases do not hold up the processing of other requests that do not include such time-consuming factors. We notify you of complicating factors in our acknowledgement letter or email, and you may choose to limit the scope of your request to convert the complex processing queue request to a simple processing queue request. For more detailed information on NARA's multitrack processing queues, see our FOIA Guide at *http://www.archives.gov/foia-guide.html* (for a paper copy, see 36 CFR 1250.20(d)).

(g) *Complex processing queue factors.* We place into a complex processing queue any request that cannot be completed within 20 working days due to complexity, volume, because it contains national security information, because it involves Presidential or Vice Presidential records, or involves unusual circumstances. Unusual circumstances include the need to:

(1) Search for and collect the records from one or more field facilities;

(2) Search for, collect, and review a voluminous amount of records that are part of a single request;

(3) Consult with another Federal agency before releasing records; or

(4) Refer records to another Federal agency for declassification.

(h) *Complex processing schedule.* If NARA needs to extend the deadline for more than an additional 10 working days due to the complexity of a request or as a result of unusual circumstances, we ask if you wish to modify your request so that we can answer the request sooner. If you do not wish to modify your request, we work with you to arrange an alternative schedule for review and release.

(i) *Complex processing: National security declassification and release.* NARA does not have the authority to declassify and release records containing national security information without the approval of the agencies that have

Original Classification Authority for the information contained in the records. We send copies of the documents to the appropriate originating Federal agencies for declassification review. We also send you an initial response to your FOIA request within 20 working days, informing you of this consultation with, or referral to, another Federal agency, except to the extent that the association with the other agency may itself be classified. Upon your request, we provide you an estimated date of completion.

(j) *Complex processing: Presidential or Vice Presidential records.* If you request Presidential or Vice Presidential records and we determine that the records are not subject to any applicable FOIA or Presidential Records Act (PRA) exemption (and can therefore be released), we must notify the current and former President(s) or Vice President(s) of our intention to disclose information from those records. After receiving the notice, the current and former President(s) and Vice President(s) have a period of time (as set out in the applicable Executive order on implementation of the PRA) in which to choose whether to invoke Executive Privilege to deny access to the requested information. Although we send you an initial status response to your FOIA request within 20 working days in these cases, the final response to your FOIA request will take longer. We can provide the final response only at the end of the Presidential notification period set forth in the Executive order.

§ 1250.27 How does NARA determine estimated completion dates for FOIA requests?

(a) When you ask for an estimated completion date for records that do not require consultation with another agency, we estimate the completion date on the basis of our reasonable judgment at that point as to how long it will take to complete the request. Given the uncertainty inherent in establishing any estimate, the estimated completion date may be subject to change at any time.

(b) When you ask for an estimated completion date for records that must be reviewed by another agency, our estimate is also based on information from the other agency:

(1) When we send documents for consultation to another agency, we ask the agency to provide an estimated completion date for its portion of the processing.

(2) We keep the consulting agency's estimated completion date for its portion of the processing in the request file and use it in addition to our own processing time estimate to provide you with an overall estimated completion date.

(3) If the consulted agency or agencies do not provide us with an estimated completion date, we provide you with an estimate based on our general experience working with the agency or agencies and the types and volumes of records at issue.

§ 1250.28 How do I request expedited processing?

(a) NARA processes requests and appeals on an expedited basis whenever we determine that one or more of the following criteria exist:

(1) A reasonable expectation of an imminent threat to an individual's life or physical safety;

(2) A reasonable expectation of an imminent loss of a substantial due process right;

(3) An urgent need to inform the public about an actual or alleged Federal Government activity (this criterion applies only to those requests made by a person primarily engaged in disseminating information to the public); or

(4) A matter of widespread and exceptional media interest in which there exist possible questions that affect public confidence in the Government's integrity.

(b) NARA can expedite requests, or segments of requests, only for records over which we have control. If NARA must refer a request to another agency, we will inform you and suggest that you seek expedited review from that agency. NARA cannot expedite the review of classified records nor can we shorten the Presidential notification period described in 36 CFR 1250.26(j).

(c) To request expedited processing, you must submit a statement, certified to be true and correct, explaining the

basis for your need for expedited processing. You must send the request to the appropriate official at the address listed in § 1250.22 of this subpart. You may request expedited processing when you first request records or at any time during NARA's processing of your request or appeal.

(d) We will respond to your request for expedited processing within 10 calendar days of our receipt of your request to expedite. If we grant your request, the NARA office responsible for the review of the requested records will process your request as a priority, and it will be processed as soon as practicable. We will inform you if we deny your request for expedited processing. If you decide to appeal that denial, we will expedite our review of your appeal.

§ 1250.30 How does NARA respond to my request?

(a) NARA sends you a response informing you of our release determination, including whether any responsive records were located, how much responsive material was located, whether the records have been released in full or withheld in full or in part, where you may review the records, and any fees you must pay for the request. We will use plain language in all written communications with requesters.

(b) If we deny any part of your request, our response will explain the reasons for the denial, which FOIA exemptions apply to withhold records, and your right to appeal that determination.

(c) NARA may withhold records in full or in part if any of the nine FOIA exemptions apply. NARA withholds information only where disclosure is prohibited by law (such as information that remains classified, or information that is specifically exempt by statute) or where we reasonably foresee that disclosure would cause harm to an interest protected by one of the FOIA exemptions. If we must withhold part of a record, we provide access to the rest of the information in the record. On the released portion of the record, we indicate the amount of information we redacted and the exemption(s) we applied, unless including that indication would harm an interest the exemption protects. NARA may also determine that a request does not reasonably describe the records sought; the information requested is not a record subject to FOIA; the requested record does not exist, cannot be located, or has been destroyed; or the requested record is not readily reproducible in the form or format you sought. Information that may be exempt from disclosure under the FOIA is:

Section of the FOIA:	Reason for exemption:
5 U.S.C. 552(b)(1)	"(A) specifically authorized under criteria established by an Executive order to be kept secret in the interest of national defense or foreign policy and (B) are in fact properly classified pursuant to such Executive order."
5 U.S.C. 552(b)(2)	"related solely to the internal personnel rules and practices of an agency."
5 U.S.C. 552(b)(3)	"specifically exempted from disclosure by statute (other than § 552(b) of this title), provided that the statute: (A) Requires that the matters be withheld from the public in such a manner as to leave no discretion on the issue; or (B) Establishes particular criteria for withholding or refers to particular types of matters to be withheld;"
5 U.S.C. 552(b)(4)	"trade secrets and commercial or financial information obtained from a person that are privileged or confidential;"
5 U.S.C. 552(b)(5)	"inter-agency or intra-agency memorandums or letters which would not be available by law to a party other than an agency in litigation with the agency;"
5 U.S.C. 552(b)(6)	"personnel and medical files and similar files the disclosure of which would constitute a clearly unwarranted invasion of personal privacy;"

Section of the FOIA:	Reason for exemption:
5 U.S.C. 552(b)(7)	"records or information compiled for law enforcement purposes, but only to the extent that the production of such law enforcement records or information: (A) could reasonably be expected to interfere with enforcement proceedings; (B) would deprive a person of a right to a fair trial or an impartial adjudication; (C) could reasonably be expected to constitute an unwarranted invasion of personal privacy; (D) could reasonably be expected to disclose the identity of a confidential source, including a State, local, or foreign agency or authority or any private institution which furnished information on a confidential basis, and, in the case of a record or information compiled by a criminal law enforcement authority in the course of a criminal investigation, or by an agency conducting lawful national security intelligence investigation, information furnished by a confidential source; (E) would disclose techniques and procedures for law enforcement investigations or prosecutions, or would disclose guidelines for law enforcement investigations or prosecutions if such disclosure could reasonably be expected to risk circumvention of the law; or (F) could reasonably be expected to endanger the life or physical safety of any individual;"
5 U.S.C. 552(b)(8)	"contained in or related to examination, operating, or condition reports prepared by, on behalf of, or for the use of an agency responsible for the regulation or supervision of financial institutions;" or
5 U.S.C. 552(b)(9)	"geological and geophysical information and data, including maps, concerning wells."

(d) If a request involves a voluminous amount of material or searches in multiple locations, we provide you with interim responses, releasing the records on a rolling basis.

(e) NARA may not withhold Presidential records subject to FOIA under 5 U.S.C. 552(b)(5) as defined in the table in paragraph (c) of this section. However, NARA may withhold Presidential records under the remaining FOIA exemptions. In addition, Presidential records may be withheld under the six PRA restrictions for a period of 12 years from when a President leaves office, in accordance with 44 U.S.C. 2204 and 36 CFR part 1270. Representatives of the current and former Presidents may also review Presidential records, and may assert constitutionally-based privileges that would prevent NARA from releasing some or all or the information requested.

§ 1250.32 How may I request assistance with the FOIA process?

(a) For assistance at any point in the FOIA process, you may contact the NARA FOIA Public Liaison. That individual is responsible for assisting you to reduce delays, increase transparency and understanding of the status of requests, and resolve any FOIA disputes. You can find a list of our FOIA Customer Service Centers and Public Liaisons at *http://www.archives.gov/foia/contacts.html*.

(b) The Office of Government Information Services (OGIS), part of NARA, serves as the Federal FOIA Ombudsman and assists requesters and agencies to prevent and resolve FOIA disputes. OGIS also reviews agencies' FOIA policies, procedures, and compliance. You may contact OGIS using the information provided below in 36 CFR 1250.74(c).

§ 1250.38 In what format does NARA provide copies?

After all applicable fees are paid, we provide you copies of records in the format you request if the records already exist in that format, or if they are readily reproducible in the format you request.

Subpart C—Fees

§ 1250.50 General information on fees for all FOIA requests.

(a) If you have failed to pay FOIA fees in the past, we will require you to pay your past-due bill and we may also require that you pay the anticipated fee before we begin processing your current request. If we estimate that your fees may be greater than $250, we may also require advance payment or a deposit before we begin processing your request. If you fail to make an advance payment within 60 calendar days after the date of NARA's fee letter, we will close the request.

(b) If we determine that you (acting either alone or with other requesters) are breaking down a single request into a series of requests in order to avoid or reduce fees, we may aggregate all of these requests when calculating the fees. In aggregating requests, we may consider the subject matter of the requests and whether the requests were filed close in time to one another.

(c) If, in the course of negotiating fees, you do not respond to a NARA component within 60 calendar days, we reserve the right to administratively close the FOIA request after 60 calendar days have passed from the date of our last correspondence to you.

§ 1250.51 What fee policies apply to archival records?

(a) NARA is specifically authorized to charge fees for copying archival records under a separate fee statute, 44 U.S.C. 2116(c). As a result, archival records are exempt from the FOIA fee waiver provisions, per 5 U.S.C. 552(a)(4)(A)(vi), and we do not grant fee waivers for archival records requested under the FOIA. However, we make most of our archival records available for examination at the NARA facility where the records are located. Whenever this is possible, you may review the records in a NARA research room at that facility free of charge and may also use your own equipment to make copies.

(b) We do not charge search fees for FOIA requests for archival records, but we do limit the search to two hours.

(c) If you would like us to make copies of archival records, we typically require you to pay all applicable fees (in accordance with the fee schedule) before we provide the copies.

(d) You can find our Fee Schedule for archival records at: *www.archives.gov/research/order/fees.html*.

§ 1250.52 What fee policies apply to operational records?

(a) For operational records, we may charge search fees even if the records are not releasable or we do not find any responsive records during our search.

(b) If you are a noncommercial FOIA requester entitled to receive 100 free pages, but the records cannot be copied onto standard-sized (8.5″ by 11″) photocopy paper, we copy them on larger paper and reduce the copy fee by the normal charge for 100 standard-sized photocopies. If the records are not on textual media (e.g., they are photographs or electronic files), we provide the equivalent of 100 pages of standard-sized paper copies for free.

(c) We do not charge you any fee if the total cost for processing your request is $25 or less.

(d) If estimated search or review fees exceed $50, we will contact you. If you have specified a different limit that you are willing to spend, we will contact you only if we estimate the fees will exceed that specified amount.

§ 1250.53 What is the FOIA fee schedule for operational records?

In responding to FOIA requests for operational records, NARA charges the following fees, where applicable, unless we have given you a reduction or waiver of fees under § 1250.56.

(a) *Search fees*—(1) *Manual searching*. When the search is relatively straightforward and can be performed by a clerical or administrative employee, the search rate is $16 per hour (or fraction thereof). When the request is more complicated and must be done by a NARA professional employee, the rate is $33 per hour (or fraction thereof).

(2) *Computer searching*. NARA bases the fees for computer searches on the actual cost to NARA of operating the computer and the salary of the operator. When the search is relatively straightforward and a clerical or administrative employee can conduct it, the search rate is $16 per hour (or fraction thereof). When the request is more complicated and a NARA professional employee must perform it, the rate is $33 per hour (or fraction thereof).

(b) *Review fees*. (1) NARA charges review fees for time we spend examining documents that are responsive to a request to determine whether we must apply any FOIA exemptions to withhold information. NARA charges review fees even if we ultimately are unable to disclose a record.

(2) The review fee is $33 per hour (or fraction thereof).

(3) NARA does not charge review fees for time we spend resolving general

legal or policy issues regarding the application of exemptions. However, NARA does charge review fees for time we spend obtaining and considering any formal objection to disclosure made by a confidential commercial information submitter.

(c) *Reproduction fees*—(1) *Self-service photocopying.* At NARA facilities with self-service photocopiers, you may make reproductions of released paper records for $0.25 per page.

(2) *Photocopying standard-sized pages.* When we make the photocopies for operational records, the charge is $0.30 per page.

(3) *Reproductions of electronic records.* NARA charges you for our direct costs for staff time for programming, computer operations, and printouts or electromagnetic media to reproduce the requested electronic information. When the work is relatively straightforward and a clerical or administrative employee can perform it, the rate is $16 per hour (or fraction thereof). When the request is more complicated and a NARA professional employee must do it, the rate is $33 per hour (or fraction thereof).

(4) *Copying other media.* This is the direct cost to NARA of the reproduction. We provide specific rates on a case-by-case basis.

§ 1250.54 How does NARA calculate FOIA fees for operational records?

(a) If you are a commercial use requester, NARA charges you fees for searching, reviewing, and copying responsive records.

(b) If you are an educational or scientific institution requester, or a member of the news media, you are entitled to search time, review time, and up to 100 pages of copying without charge. NARA charges copying fees only beyond the first 100 pages.

(c) If you do not fall into either of the categories in paragraphs (a) and (b) of this section, and are an ''other requester,'' you are entitled to two hours of search and review time, and up to 100 pages of copying without charge. NARA may charge for search time beyond the first two hours and for copying beyond the first 100 pages.

(d) NARA does not charge a fee for processing a FOIA request if it exceeds any time limit under 5 U.S.C. 552(a)(6) in processing that request, unless unusual or exceptional circumstances (defined under the FOIA statute) are relevant.

§ 1250.56 How may I request a fee waiver for operational records?

(a) We waive or reduce your fees for NARA operational records only if your request meets *both* of the following criteria:

(1) The request is in the public interest (*i.e.*, the information is likely to contribute significantly to public understanding of the operations or activities of the Government); and

(2) The request is not primarily in your commercial interest.

(b) To be eligible for a fee waiver or reduction you must explain:

(1) How the records you are requesting pertain to the operations and activities of the Federal Government. There must be a clear connection between the identifiable operations or activities of the Federal Government and the subject of your request;

(2) How the release will reveal meaningful information that the public does not already know about Federal Government activities. Disclosing information that is already in the public domain, in either the same or a substantially-identical form, does not add anything new to the public's understanding of Government activities;

(3) How disclosure to you will advance public understanding of the issue;

(4) Your expertise or understanding of the requested records as well as your ability and intention to effectively convey information to the public. NARA ordinarily presumes that a representative of the news media satisfies this consideration;

(5) How you intend to disseminate the requested information to a broad spectrum of the public; and

(6) How disclosure will lead to a significantly greater understanding of the Government by the public.

(c) After reviewing your request and determining that there is a substantial public interest in release, we also determine if the request primarily furthers your commercial interests. If it

does, you are not eligible for a fee waiver.

(d) You should ask for waiver or reduction of fees when you first submit your request to NARA, and should address the criteria referenced above. You may also ask for a fee waiver at a later time while the underlying record request is still pending or during an administrative appeal.

(e) We may also waive (either partially or in full) or reduce fees for operational records in additional circumstances as a matter of administrative discretion.

Subpart D—Appeals

§ 1250.70 When may I appeal NARA's FOIA determination?

You may appeal when there is any adverse determination, including:

(a) Refusal to release a record, either in whole or in part;

(b) Determination that a record does not exist or cannot be found;

(c) Determination that the record you sought was not subject to the FOIA;

(d) Denial of a request for expedited processing;

(e) Denial of a fee waiver request; or

(f) Fee category determination.

§ 1250.72 How do I file an appeal?

(a) You may submit your appeal via mail or electronically. All appeals must be in writing and received by NARA within 60 calendar days from the date of our determination letter.

(1) For appeals submitted via mail, you should mark both your letter and envelope with the words ''FOIA Appeal,'' and include either your tracking number or a copy of your initial request and our determination letter.

(i) If NARA's Inspector General denied your request, send your appeal to the Archivist of the United States; (ATTN: FOIA Appeal Staff); Room 4200, National Archives and Records Administration; 8601 Adelphi Road; College Park, Maryland 20740–6001.

(ii) Send all other appeals for denial of access to Federal records to the Deputy Archivist of the United States; (ATTN: FOIA Appeal Staff); Room 4200; National Archives and Records Administration; 8601 Adelphi Road; College Park, Maryland 20740–6001.

(iii) For Presidential records, send appeals to the appropriate Presidential library director at the address listed in 36 CFR 1253.3.

(2) For all appeals submitted electronically, except those regarding Presidential records, send an email to *FOIA@nara.gov*. For Presidential records, electronic appeals must contain all the information listed in § 1250.72 and be sent to the email address of the appropriate Presidential library. These email addresses are listed in 36 CFR 1253.3. The subject line of the email should read ''PRA/FOIA appeal.''

(b) In your appeal letter, you may include as much or as little related information as you wish, as long as it clearly identifies NARA's initial determination letter (including the assigned request number, if known) from which you are appealing, and why we should release the records, grant your fee waiver request, or expedite the processing of your request. If we were not able to find the records you wanted, explain why you believe NARA's search was inadequate. If we denied you access to records and told you that those records were not subject to FOIA, please explain why you believe the records are subject to FOIA.

§ 1250.74 How does NARA process appeals?

(a) We respond to your appeal within 20 working days after the appeal official designated in 36 CFR 1250.72(a)(1)(i) and (ii) receives it. If we reverse or modify the initial decision, we inform you in writing and, if applicable, reprocess your request. For Presidential records, if we release any additional information, we must follow the notification procedures outlined in 36 CFR 1250.26(j). If we do not change our initial decision, we respond in writing to you, explain the reasons for the decision, and set out any FOIA exemptions that apply.

(1) An adverse determination by the Archivist or Deputy Archivist will be the final action by NARA; and

(2) NARA will cease processing an appeal if a requester files a FOIA lawsuit.

(b) We notify you of your right to seek judicial review of an adverse determination as set forth in the FOIA at 5 U.S.C. 552(a)(4)(B). If you wish to seek judicial review of any adverse determination, you must first appeal it administratively under this section.

(c) We also inform you that the Office of Government Information Services (OGIS) offers mediation services to resolve disputes between FOIA requesters and Federal agencies as a non-exclusive alternative to litigation. You may contact OGIS in any of the following ways:

Office of Government Information Services, National Archives and Records Administration, 8601 Adelphi Road—OGIS, College Park, MD 20740, *ogis.archives.gov*, Email: *ogis@nara.gov*, Telephone: 202–741–5770, Facsimile: 202–741–5769, Toll-free: 1–877–684–6448.

Subpart E—Confidential Commercial Information

§ 1250.80 How does a submitter identify records containing confidential commercial information?

At the time of submission, a submitter of business information is expected to designate, by appropriate markings, any portions of its submission that it considers to be protected from disclosure under FOIA Exemption 4. Although these portions may be designated, this does not preclude NARA from conducting a full FOIA review of all such documents if a FOIA request for those records has been received. These designations will expire 10 years after the date of the submission unless the submitter requests, and provides justification for, a longer designation period, or NARA extends the designation period at its discretion.

§ 1250.82 How does NARA process FOIA requests for confidential commercial information?

If NARA receives a FOIA request for records containing confidential commercial information or for records that we believe may contain confidential commercial information, we follow these procedures:

(a) If the records are less than 10 years old or are still covered under an extended FOIA Exemption 4 designation period, we review the records in response to a FOIA request. If we then believe that we should release the records under FOIA, we make reasonable efforts to inform the submitter. The notice to the submitter describes the business information requested or includes copies of the requested records. NARA does not notify the submitter when we determine that:

(1) We must withhold the information under FOIA's exemptions;

(2) The information has been lawfully published or made available to the public; or

(3) We are required by a statute (other than the FOIA), or by a regulation issued in accordance with the requirements of Executive Order 12600, to disclose the information.

(b) If the records are 10 or more years old, we review the records in response to a FOIA request as we would any other records, and at our discretion, inform the submitter. NARA releases the records if we determine that neither Exemption 4 nor any other exemption applies.

(c) When the request is for information from a single or small number of submitters, we send a notice via registered mail to the submitter's last known address. NARA's notice to the submitter includes a copy of the FOIA request and tells the submitter the time limits and procedures for objecting to the release of the requested material.

(d) When the request involves information from a voluminous number of submitters, we may post or publish the notice in a place or manner reasonably likely to inform the submitters of the proposed disclosure, instead of sending letters.

(e) We provide the submitter with 20 working days from the date of NARA's notice to object to the release and to explain a basis for the objection, including justification and support for the claim. The NARA FOIA Officer may extend this period as appropriate.

(f) We review and consider all objections to release that we receive within the time limit. Any information provided by a submitter under this provision may itself be subject to disclosure

under FOIA. NARA considers a submitter who fails to respond within the time period specified in the notice to have no objection to disclosure of the information. If we decide to release the records, we inform the submitter in writing, along with NARA's reasons for the decision to release. We include with the notice copies of the records as we intend to release them. We also inform the submitter that we intend to release the records within a reasonable time after the date of the notice unless a U.S. District Court forbids disclosure. NARA will not consider any information we receive after the date of a disclosure decision.

(g) If the requester files a lawsuit under the FOIA for access to any withheld records, we promptly notify the submitter.

(h) NARA notifies the requester in three circumstances:

(1) When we notify the submitter of the opportunity to object to disclosure, or to extend the time for objecting;

(2) When we notify the submitter of our intent to disclose the requested information; and

(3) When a submitter files a lawsuit to prevent the disclosure of the information.

PART 1251—TESTIMONY BY NARA EMPLOYEES RELATING TO AGENCY INFORMATION AND PRODUCTION OF RECORDS IN LEGAL PROCEEDINGS

Sec.

1251.1 What is the purpose of this part?
1251.2 To what demands does this part apply?
1251.3 What definitions apply to this part?
1251.4 May employees provide records or give testimony in response to a demand without authorization?
1251.6 How does the General Counsel determine whether to comply with a demand for records or testimony?
1251.8 Who is authorized to accept service of a subpoena demanding the production of records or testimony?
1251.10 What are the filing requirements for a demand for documents or testimony?
1251.12 How does NARA process your demand?
1251.14 Who makes the final determination on compliance with demands for records or testimony?
1251.16 Are there any restrictions that apply to testimony?
1251.18 Are there any restrictions that apply to the production of records?
1251.20 Are there any fees associated with providing records or testimony?
1251.22 Are there penalties for providing records or testimony in violation of this part?

AUTHORITY: 44 U.S.C. 2104; 44 U.S.C. 2108; 44 U.S.C. 2109; 44 U.S.C. 2111 note; 44 U.S.C. 2112; 44 U.S.C. 2116; 44 U.S.C. ch. 22; 44 U.S.C. 3103.

SOURCE: 73 FR 79393, Dec. 29, 2008, unless otherwise noted.

§ 1251.1 What is the purpose of this part?

(a) This part provides the policies and procedures to follow when submitting a demand to an employee of the National Archives and Records Administration (NARA) to produce records or provide testimony relating to agency information in connection with a legal proceeding. You must comply with these requirements when you request the release or disclosure of records or agency information.

(b) The National Archives and Records Administration intends these provisions to:

(1) Promote economy and efficiency in its programs and operations;

(2) Minimize NARA's role in controversial issues not related to its mission;

(3) Maintain NARA's impartiality among private litigants when NARA is not a named party; and

(4) Protect sensitive, confidential information and the deliberative processes of NARA.

(c) In providing for these requirements, NARA does not waive the sovereign immunity of the United States.

(d) This part provides guidance for the internal operations of NARA. It does not create any right or benefit, substantive or procedural, that a party may rely upon in any legal proceeding against the United States.

§ 1251.2 To what demands does this part apply?

This part applies to demands to NARA employees for factual, opinion, or expert testimony relating to agency information or for production of records in legal proceedings whether or

not NARA is a named party. However, it does not apply to:

(a) Demands upon or requests for a NARA employee to testify as to facts or events that are unrelated to his or her official duties and that are unrelated to the functions of NARA;

(b) Demands upon or requests for a former NARA employee to testify as to matters in which the former employee was not directly or materially involved while at NARA;

(c) Requests for the release of, or access to, records under the Freedom of Information Act, 5 U.S.C. 552, as amended; the Privacy Act, 5 U.S.C. 552a; the Federal Records Act, 44 U.S.C. chs. 21, 29, 31, 33; the Presidential Records Act, 44 U.S.C. ch. 22; or the Presidential Recordings and Materials Preservation Act, 44 U.S.C. 2111 note;

(d) Demands for records or testimony in matters before the Equal Employment Opportunity Commission or the Merit Systems Protection Board; and

(e) Congressional demands and requests for testimony or records.

§ 1251.3 What definitions apply to this part?

The following definitions apply to this part:

Court of competent jurisdiction means, for purposes of this part, the judge or some other competent entity, as authorized by statute or regulation or other lawful means, and not simply by an attorney or court clerk, must sign a demand for records the disclosure of which is constrained by the Privacy Act, 5 U.S.C. 552a because section (b)(11) of the Act requires appropriate authorization of a court of competent jurisdiction. See *Doe* v. *Digenova,* 779 F.2d 74 (D.C. Cir. 1985); *Stiles* v. *Atlanta Gas Light Company*, 453 F. Supp. 798 (N.D. Ga. 1978).

Demand means a subpoena, or an order or other command of a court or other competent authority, for the production, disclosure, or release of records in a legal proceeding, or for the appearance and testimony of a NARA employee in a legal proceeding.

General Counsel means the General Counsel of NARA or a person to whom the General Counsel has delegated authority under this part. General Counsel also means the Inspector General of NARA (or a person to whom the Inspector General has delegated authority under this part) when a demand is made for records of NARA's Office of the Inspector General, or for the testimony of an employee of NARA's Office of the Inspector General.

Legal proceeding means any matter before a court of law, administrative board or tribunal, commission, administrative law judge, hearing officer, legislative body, or other body that conducts a legal or administrative proceeding. Legal proceeding includes all phases of litigation.

NARA means the National Archives and Records Administration.

NARA employee or employee means:

(1) Any current or former officer or employee of NARA, except that this definition does not include former NARA employees who are retained or hired as expert witnesses concerning, or who agree to testify about, matters available to the public or matters with which they had no specific involvement or responsibility during their employment with NARA;

(2) Any other individual hired through contractual agreement by or on behalf of NARA or who has performed or is performing services under such an agreement for NARA;

(3) Any individual who served or is serving in any consulting or advisory capacity to NARA, whether formal or informal; and

(4) Any individual who served or is serving in any volunteer or internship capacity to NARA.

Records or agency information means:

(1) Archival records, which are permanently valuable records of the United States Government that have been transferred to the legal custody of the Archivist of the United States;

(2) Operational records, which are those records that NARA creates or receives in carrying out its mission and responsibilities as an executive branch agency. This does not include archival records as defined above in this section;

(3) All documents and materials which are NARA agency records under the Freedom of Information Act, 5 U.S.C. 552, as amended;

(4) Presidential records as defined in 44 U.S.C. 2201; historical materials as

defined in 44 U.S.C. 2101; records as defined in 44 U.S.C. 2107 and 44 U.S.C. 3301;

(5) All other documents and materials contained in NARA files; and

(6) All other information or materials acquired by a NARA employee in the performance of his or her official duties or because of his or her official status.

Testimony means any written or oral statements, including depositions, answers to interrogatories, affidavits, declarations, interviews, and statements made by an individual in connection with a legal proceeding.

§ 1251.4 May employees provide records or give testimony in response to a demand without authorization?

No, except as otherwise permitted by § 1251.14 of this part, no employee may produce records and information or provide any testimony relating to agency information in response to a demand, or other legal request, without the prior, written approval of the General Counsel.

§ 1251.6 How does the General Counsel determine whether to comply with a demand for records or testimony?

The General Counsel may consider the following factors in determining whether or not to grant an employee permission to testify on matters relating to agency information, or permission to produce records in response to a demand:

(a) NARA's compliance with the demand is required by federal law, regulation or rule, or is otherwise permitted by this part;

(b) The purposes of this part are met;

(c) Allowing such testimony or production of records would be necessary to prevent a miscarriage of justice;

(d) NARA has an interest in the decision that may be rendered in the legal proceeding;

(e) Allowing such testimony or production of records would assist or hinder NARA in performing its statutory duties;

(f) Allowing such testimony or production of records would involve a substantial use of NARA resources;

(g) Responding to the demand would interfere with the ability of NARA employees to do their work;

(h) Allowing such testimony or production of records would be in the best interest of NARA or the United States;

(i) The records or testimony can be obtained from the publicly available records of NARA or from other sources;

(j) The demand is unduly burdensome or otherwise inappropriate under the applicable rules of discovery or the rules of procedure governing the case or matter in which the demand arose;

(k) Disclosure would violate a statute, Executive Order or regulation;

(l) Disclosure would reveal confidential, sensitive, or privileged information, trade secrets or similar, confidential commercial or financial information, otherwise protected information, or information which would otherwise be inappropriate for release;

(m) Disclosure would impede or interfere with an ongoing law enforcement investigation or proceeding, or compromise constitutional rights;

(n) Disclosure would result in NARA appearing to favor one litigant over another;

(o) Disclosure relates to documents that were created by another agency;

(p) A substantial Government interest is implicated;

(q) The demand is within the authority of the party making it;

(r) The demand is sufficiently specific to be answered; and

(s) Other factors, as appropriate.

§ 1251.8 Who is authorized to accept service of a subpoena demanding the production of records or testimony?

(a) Demands for testimony, except those involving an employee of NARA's Office of the Inspector General, must be addressed to, and served on, the General Counsel, National Archives and Records Administration, Suite 3110, 8601 Adelphi Road, College Park, MD 20740–6001.

(b) Demands for the testimony of an employee of NARA's Office of the Inspector General must be addressed to, and served on, the Inspector General, National Archives and Records Administration, Suite 1300, 8601 Adelphi Road, College Park, MD 20740–6001.

(c) Demands for the production of NARA operational records, except those of the Office of the Inspector General, must be addressed to, and served on, the General Counsel.

(d) Demands for records of the Inspector General must be addressed to, and served on, the Inspector General.

(e) Demands for the production of records stored in a Federal Records Center (FRC), including the National Personnel Records Center, must be addressed to, and served on, the director of the FRC where the records are stored. NARA honors the demand to the extent required by law, if the agency having legal title to the records has not imposed any restrictions. If the agency has imposed restrictions, NARA notifies the authority issuing the demand that NARA abides by the agency-imposed restrictions and refers the authority to the agency for further action.

(f) Demands for the production of materials designated as Federal archival records, Presidential records or donated historical materials administered by NARA must be addressed to, and served on either: the Assistant Archivist for Records Services—Washington, DC (for records located in Headquarters); Director of Archival Operations (for records located in the regions); or the appropriate Presidential Library Director.

(g) For matters in which the United States is a party, the Department of Justice should contact the General Counsel instead of submitting a demand for records or testimony on its own or another agency's behalf.

(h) The demanding party is responsible for complying with all service requirements, including any additional requirements contained in the Federal Rules of Civil Procedure or other statutory or regulatory authority.

(i) Contact information for each NARA facility may be found at 36 CFR part 1253.

§ 1251.10 What are the filing requirements for a demand for documents or testimony?

You must comply with the following requirements, as appropriate, whenever you issue a demand to a NARA employee for records, agency information or testimony:

(a) Your demand must be in writing and must be served on the appropriate party as identified in § 1251.8.

(b) Demands for production of records that are governed by the Privacy Act require authorization of a court of competent jurisdiction as defined in § 1251.3.

(c) Your written demand (other than a demand pursuant to the Federal Rules of Civil Procedure in a case in which NARA is a party, in which case you must comply with the requirements of that rule) must contain the following information:

(1) The caption of the legal proceeding, docket number, and name and address of the court or other authority involved;

(2) A copy of the complaint or equivalent document setting forth the assertions in the case and any other pleading or document necessary to show relevance;

(3) A list of categories of records sought, a detailed description of how the information sought is relevant to the issues in the legal proceeding, and a specific description of the substance of the testimony or records sought;

(4) A statement as to how the need for the information outweighs the need to maintain any confidentiality of the information and outweighs the burden on NARA to produce the records or provide testimony;

(5) A statement indicating that the information sought is not available from another source, from other persons or entities, or from the testimony of someone other than a NARA employee, such as a retained expert;

(6) If testimony is requested, the intended use of the testimony, a general summary of the desired testimony, and a showing that no document could be provided and used instead of testimony;

(7) A description of all previous decisions, orders, or pending motions in the case that bear upon the relevance of the requested records or testimony;

(8) The name, address, and telephone number of counsel to each party in the case; and

(9) An estimate of the amount of time that the requester and other parties may require with each NARA employee for time spent by the employee in connection with the request for testimony.

(d) NARA reserves the right to require additional information to process your demand.

(e) Your demand (other than a demand pursuant to the Federal Rules of Civil Procedure in a case in which NARA is a party, in which case you must comply with the requirements of that rule) should be submitted at least 45 days before the date that records or testimony is required. Demands submitted in less than 45 days before records or testimony is required must be accompanied by a written explanation stating the reasons for the late request and the reasons for expedited processing.

(f) Failure to cooperate in good faith to enable the General Counsel to make an informed decision may serve as the basis for a determination not to comply with your demand.

(g) The information collection contained in this section has been approved by the Office of Management and Budget under the Paperwork Reduction Act under the control number 3095–0038.

§ 1251.12 How does NARA process your demand?

(a) After service of a demand for production of records or for testimony, an appropriate NARA official reviews the demand and, in accordance with the provisions of this, determines whether, or under what conditions, to produce records or authorize the employee to testify on matters relating to agency information.

(b) NARA processes demands in the order in which we receive them. NARA will not complete and return certifications, affidavits, or similar documents submitted with a demand for records, but if requested will certify records in accordance with NARA's published fee schedule at 36 CFR part 1258. Absent exigent or unusual circumstances, NARA responds within 45 days from the date of receipt. The time for response depends upon the scope of the demand.

(c) The General Counsel may grant a waiver of any procedure described by this part where a waiver is considered necessary to promote a significant interest of NARA or the United States or for other good cause.

§ 1251.14 Who makes the final determination on compliance with demands for records or testimony?

The General Counsel makes the final determination on demands to employees for testimony. The appropriate NARA official authorized to accept service, as described in § 1251.8, makes the final determination on demands for the production of records. The NARA official notifies the requester and, as necessary, the court or other authority of the final determination and any conditions that may be imposed on the release of records or information, or on the testimony of a NARA employee. If the NARA official deems it appropriate not to comply with the demand, the official communicates the reasons for the noncompliance as appropriate.

§ 1251.16 Are there any restrictions that apply to testimony?

(a) The General Counsel may impose conditions or restrictions on the testimony of NARA employees including, for example, limiting the areas of testimony or requiring the requester and other parties to the legal proceeding to agree that the transcript of the testimony will be kept under seal or will only be used or made available in the particular legal proceeding for which testimony was requested. The General Counsel may also require a copy of the transcript of testimony at the requester's expense.

(b) NARA may offer the employee's written declaration instead of testimony.

(c) If authorized to testify pursuant to this part, an employee may testify as to facts within his or her personal knowledge, but, unless specifically authorized to do so by the General Counsel, the employee must not:

(1) Disclose confidential or privileged information; or

(2) For a current NARA employee, testify as an expert or opinion witness with regard to any matter arising out of the employee's official duties or the

functions of NARA unless testimony is being given on behalf of the United States.

§ 1251.18 Are there any restrictions that apply to the production of records?

(a) The General Counsel may impose conditions or restrictions on the release of records and agency information, including the requirement that parties to the proceeding obtain a protective order or execute a confidentiality agreement to limit access and any further disclosure. The terms of the protective order or of a confidentiality agreement must be acceptable to the General Counsel. In cases where protective orders or confidentiality agreements have already been executed, NARA may condition the release of records and agency information on an amendment to the existing protective order or confidentiality agreement.

(b) Typically, original NARA records will not be produced in response to a demand. Instead of the original records, NARA provides certified copies for evidentiary purposes (see 28 U.S.C. 1733; 44 U.S.C. 2116). Such copies must be given judicial notice and must be admitted into evidence equally with the originals from which they were made (see 44 U.S.C. 2116). If the General Counsel so determines, under exceptional circumstances, original NARA records may be made available for examination in response to a demand, but they are not to be presented as evidence.

§ 1251.20 Are there any fees associated with producing records or providing testimony?

(a) *Generally*. The General Counsel may condition the production of records or appearance for testimony upon advance payment of a reasonable estimate of the costs to NARA.

(b) *Fees for records*. Fees for producing records include fees for searching, reviewing, and duplicating records, costs of attorney time spent in reviewing the demand or request, and expenses generated by materials and equipment used to search for, produce, and copy the responsive information. Costs for employee time are calculated on the basis of the hourly pay of the employee (including all pay, allowance, and benefits). Fees for duplication are the same as those charged by NARA in part 1258 of this title.

(c) *Witness fees*. Fees for attendance by a witness include fees, expenses, and allowances prescribed by the court's rules. If no such fees are prescribed, witness fees are determined based upon the rule of the Federal district court closest to the location where the witness appears.

(d) *Payment of fees*. (1) Witness fees for current NARA employees must be submitted to the General Counsel and made payable to the Treasury of the United States.

(2) Fees for the production of records, including records certification fees, must be submitted to the official who makes the final determination on demands for the production of records, as described in § 1251.14, and made payable to the National Archives Trust Fund (NATF).

(3) Applicable fees paid to former NARA employees providing testimony should be paid directly to the former employee in accordance with 28 U.S.C. 1821 or other applicable statutes.

(e) *Certification (authentication) of copies of records*. NARA may certify that records are true copies in order to facilitate their use as evidence. Request certified copies from NARA at least 45 days before the date they are needed. We charge a certification fee for each document certified.

(f) *Waiver or reduction of fees*. The General Counsel, in his or her sole discretion, may, upon a showing of good cause, waive or reduce any fees in connection with the testimony, production, or certification of records.

(g) *De minimis fees*. Fees are not assessed if the total charge is $10.00 or less, or as otherwise stated in NARA policy.

§ 1251.22 Are there any penalties for providing records or testimony in violation of this part?

(a) An employee who discloses official records or information or gives testimony relating to official information, except as expressly authorized by NARA or as ordered by a Federal court after NARA has had the opportunity to

be heard, may face the penalties provided in 18 U.S.C. 641 and other applicable laws. Additionally, former NARA employees are subject to the restrictions and penalties of 18 U.S.C. 207 and 216.

(b) A current NARA employee who testifies or produces official records and information in violation of this part is subject to disciplinary action.

PART 1252—PUBLIC USE OF RECORDS, DONATED HISTORICAL MATERIALS, AND FACILITIES; GENERAL

Sec.
1252.1 Scope.
1252.2 Definitions.

AUTHORITY: 44 U.S.C. 2104(a).

§ 1252.1 Scope.

This subchapter prescribes rules and procedures governing the public use of records and donated historical materials in the custody of the National Archives and Records Administration (NARA). Except for part 1250, this subchapter does not apply to current operating records of NARA. This subchapter also prescribes rules and procedures governing the public use of certain NARA facilities.

[59 FR 29191, June 6, 1994]

§ 1252.2 Definitions.

The following definitions are established for terms used in this subchapter.

Archives or archival records mean Federal records that have been determined by NARA to have sufficient historical or other value to warrant their continued preservation by the U.S. Government, and have been transferred to the National Archives of the United States.

Director means the head of a Presidential library, the head of a Presidential Materials Staff, the head of a NARA division, branch, archival center, or unit responsible for servicing archival records, the head of a regional archives, or the head of a Federal records center.

Documents mean, for purposes of part 1254 of this chapter, archives, FRC records, donated historical materials, Nixon Presidential historical materials, and Presidential records, regardless of the media on which they are contained. Document form may include paper, microforms, photographs, sound recordings, motion pictures, maps, drawings, and electronic files.

Donated historical materials means books, correspondence, documents, papers, pamphlets, magnetic tapes, pictures, photographs, plats, maps, films, motion pictures, sound recordings, and other documental media having historical or commemorative value accepted by NARA from a source other than an agency of the U.S. Government.

Federal records center includes the Washington National Records Center, the National Personnel Records Center, and the Federal records centers listed in § 1253.6 of this chapter.

Federal records center records (FRC records) mean records which, pending their transfer to the National Archives of the United States or their disposition in any other manner authorized by law, have been transferred to a Federal records center operated by NARA.

Nixon Presidential historical materials has the meaning specified in § 1275.16 of this chapter.

Presidential records has the meaning specified in § 1270.14 of this chapter.

Records mean records or microfilm copies of records transferred to NARA under 44 U.S.C. 2107 and 3103; namely, archives and Federal records center records as the terms are defined in § 1252.2. The term *records* does not include current operating records of NARA, the public availability of which is governed by part 1250 of this chapter, or donated historical materials as defined in this section.

Researcher means a person who has been granted access to original documents or copies of documents.

[33 FR 4885, Mar. 22, 1968, 42 FR 13022, Mar. 8, 1977, and 49 FR 33253, Aug. 22, 1984. Redesignated and amended at 50 FR 15723, 15726, Apr. 19, 1985; 59 FR 29191, June 6, 1994]

PART 1253—LOCATION OF NARA FACILITIES AND HOURS OF USE

Sec.
1253.1 National Archives Building.
1253.2 National Archives at College Park.
1253.3 Presidential Libraries.
1253.4 Federal Records Centers.

1253.5 Archival research rooms.
1253.6 Federal Register.
1253.7 Federal Holidays.
1253.8 Notification Process for Changes in Hours.

AUTHORITY: 44 U.S.C. 2104(a).

SOURCE: 75 FR 71545, Nov. 24, 2010, unless otherwise noted.

§ 1253.1 National Archives Building.

The National Archives Building is located at 700 Pennsylvania Avenue, NW., Washington, DC 20408. Hours for the Research Center and the Central Research Room are posted at *http://www.archives.gov*. The exhibit areas' hours of operation are also posted at *http://www.archives.gov*. Last admission to the exhibit areas of the building will be no later than 30 minutes before the stated closing hour. The phone number for the National Archives Building is 202–357–5000.

§ 1253.2 National Archives at College Park.

The National Archives at College Park is located at 8601 Adelphi Road, College Park, MD 20740–6001. Hours for the Research Center are posted at *http://www.archives.gov*. The phone number for the Research Center is 800–234–8861.

§ 1253.3 Presidential Libraries.

Hours for the Presidential libraries' research rooms are posted at *http://www.archives.gov*. The Presidential library museums are open every day except Thanksgiving, December 25, and January 1. For more specific information about museum hours, please contact the libraries directly or visit the NARA Web site at *http://www.archives.gov*. Contact information for each library is as follows:

(a) Herbert Hoover Library is located at 210 Parkside Drive, West Branch, IA 52358 (mailing address: P.O. Box 488, West Branch, IA 52358). The phone number is 319–643–5301 and the fax number is 319–643–6045. The email address is *hoover.library@nara.gov*.

(b) Franklin D. Roosevelt Library is located at 4079 Albany Post Road, Hyde Park, NY 12538. The phone number is 800–FDR–VISIT or 845–486–7770 and the fax number is 845–486–1147. The email address is *roosevelt.library@nara.gov*.

(c) Harry S. Truman Library is located at 500 W. U.S. Hwy. 24, Independence, MO 64050. The phone number is 800–833–1225 or 816–268–8200 and the fax number is 816–268–8295. The email address is *truman.library@nara.gov*.

(d) Dwight D. Eisenhower Library is located at 200 SE. 4th Street, Abilene, KS 67410. The phone number is 877–RING–IKE or 785–263–6700 and the fax number is 785–263–6715. The email address is *eisenhower.library@nara.gov*.

(e) John Fitzgerald Kennedy Library is located at Columbia Point, Boston, MA 02125. The phone number is 866–JFK–1960 or 617–514–1600 and the fax number is 617–514–1652. The email address is *kennedy.library@nara.gov*.

(f) Lyndon Baines Johnson Library and Museum is located at 2313 Red River Street, Austin, TX 78705. The phone number is 512–721–0200 and the fax number is 512–721–0170. The email address is *johnson.library@nara.gov*.

(g) Richard Nixon Library, California is located at 18001 Yorba Linda Boulevard, Yorba Linda, CA 92886. The phone number is 714–983–9120 and the fax number is 714–983–9111. The email address is *nixon@nara.gov*. Richard Nixon Library, Maryland is located at 8601 Adelphi Road, College Park, MD 20740. The phone number is 301–837–3290 and the fax number is 301–837–3202. The email address is *nixon@nara.gov*.

(h) Gerald R. Ford Library is located at 1000 Beal Avenue, Ann Arbor, MI 48109. The phone number is 734–205–0555 and the fax number is 734–205–0571. The email address is *ford.library@nara.gov*. Gerald R. Ford Museum is located at 303 Pearl Street NW., Grand Rapids, MI 49504. The phone number is 616–254–0400 and the fax number is 616–254–0386. The email address is *ford.museum@nara.gov*.

(i) Jimmy Carter Library is located at 441 Freedom Parkway, Atlanta, GA 30307. The phone number is 404–865–7100 and the fax number is 404–865–7102. The email address is *carter.library@nara.gov*.

(j) Ronald Reagan Library is located at 40 Presidential Drive, Simi Valley, CA 93065. The phone number is 800–410–8354 or 805–577–4000 and the fax number is 805–577–4074. The email address is *reagan.library@nara.gov*.

(k) George Bush Library is located at 1000 George Bush Drive West, College Station, TX 77845. The phone number is

979–691–4000 and the fax number is 979–691–4050. The email address is *bush.library@nara.gov*.

(l) William J. Clinton Library is located at 1200 President Clinton Avenue, Little Rock, AR 72201. The phone number is 501–374–4242 and the fax number is 501–244–2883. The email address is *clinton.library@nara.gov*.

(m) George W. Bush Library is located at 2943 SMU Boulevard, Dallas, TX 75205. The phone number is 214–346–1650 and the fax number is 214–346–1699. The email address is *gwbush.library@nara.gov*.

[79 FR 49452, Aug. 21, 2014]

§ 1253.4 Federal Records Centers.

Hours for federal records centers are posted at *http://www.archives.gov/frc/*. Contact information for each center is as follows:

(a) Atlanta Federal Records Center is located at 4712 Southpark Blvd., Ellenwood, GA 30294. The telephone number is 404–736–2820.

(b) Boston Federal Records Center is located at the Frederick C. Murphy Federal Center, 380 Trapelo Road, Waltham, MA 02452. The telephone number is 781–663–0130.

(c) Chicago Federal Records Center is located at 7358 Pulaski Road, Chicago, IL 60629. The telephone number is 773–948–9000.

(d) Dayton Federal Records Center is located at 3150 Springboro Road, Dayton, OH 45439. The telephone number is 937–425–0600.

(e) Denver Federal Records Center is located at 17101 Huron Street, Broomfield, CO 80023. The telephone number is 303–604–4760.

(f) Fort Worth Federal Records Center is located at 1400 John Burgess Drive, Fort Worth, Texas 76140. The telephone number is 817–551–2000.

(g) Kansas City Federal Records Center is located at 8600 NE Underground Drive, Pillar 300–G, Kansas City, MO 64161. The telephone number is 816–994–1700.

(h) Kingsridge Federal Records Center is located at 8801 Kingsridge Drive, Dayton, OH 45458. The telephone number is 937–425–0690.

(i) Lee's Summit Federal Records Center is located at 200 Space Center Drive, Lee's Summit, MO 64064. The telephone number is 816–268–8100.

(j) Lenexa Federal Records Center is located at 17501 W. 98th Street, Suite 3150, Lenexa, KS 66219. The telephone number is 913–825–7800.

(k) National Personnel Records Center—Military Personnel Records is located at 1 Archives Drive, St. Louis, MO 63138. The telephone number is 314–801–0582.

(l) National Personnel Records Center—Civilian Personnel Records is located at 1411 Boulder Boulevard, Valmeyer, IL 62295. The telephone number is 618–935–3005.

(m) Philadelphia Federal Records Center is located at 14700 Townsend Road, Philadelphia, PA 19154. The telephone number is 215–305–2000.

(n) Pittsfield Federal Records Center is located at 10 Conte Drive, Pittsfield, MA 01201. The telephone number is 413–236–3603.

(o) Riverside Federal Records Center is located at 23123 Cajalco Road, Perris, CA 92570. The telephone number is 951–956–2000.

(p) San Francisco Federal Records Center is located at Leo J. Ryan Building, 1000 Commodore Drive, San Bruno, CA 94066. The telephone number is 650–238–3500.

(q) Seattle Federal Records Center is located at 6125 Sand Point Way, NE., Seattle, WA 98115. The telephone number is 206–336–5115.

(r) Washington National Records Center is located at 4205 Suitland Road, Suitland, MD 20746. The phone number is 301–778–1600.

[79 FR 49453, Aug. 21, 2014]

§ 1253.5 Archival Research Rooms.

Hours for archival research rooms outside of the Washington, DC area, including extended hours for microfilm research only, are posted at *http://www.archives.gov*. Contact information for each archival research facility is as follows:

(a) The National Archives at Atlanta is located at 5780 Jonesboro Road, Morrow, GA 30260. The telephone number is 770–968–2458.

(b) The National Archives at Boston is located in the Frederick C. Murphy

Federal Center, 380 Trapelo Road, Waltham, MA 02452–6399. The telephone number is 781–663–0121.

(c) The National Archives at Chicago is located at 7358 South Pulaski Road, Chicago, IL 60629–5898. The telephone number is 773–948–9009.

(d) The National Archives at Denver is located at 17101 Huron Street, Broomfield, CO 80023–8909. The telephone number is 303–604–4749.

(e) The National Archives at Fort Worth is located at 1400 John Burgess Drive, Fort Worth, Texas 76140. The telephone number is 817–551–2000.

(f) The National Archives at Kansas City is located at 400 West Pershing Road, Kansas City, MO 64108. The telephone number is 816–268–8017.

(g) The National Archives at New York City is located in the Alexander Hamilton U.S. Customs House, 1 Bowling Green, New York, NY 10004–1415. The telephone number is 212–401–1623.

(h) The National Archives at Philadelphia is located at 14700 Townsend Road, Philadelphia, PA 19154. The telephone number is 215–305–2000.

(i) The National Archives at Riverside is located at 23123 Cajalco Road, Perris, CA 92570. The telephone number is 951–956–2000.

(j) The National Archives at San Francisco is located in the Leo J. Ryan Building, 1000 Commodore Drive, San Bruno, CA 94066–2350. The telephone number is 650–238–3478.

(k) The National Archives at Seattle is located at 6125 Sand Point Way, NE., Seattle, WA 98115–7999. The telephone number is 206–336–5141.

(l) The National Archives at St. Louis is located at 1 Archives Drive, St. Louis, MO 63138. The telephone number is 314–801–0850.

[79 FR 49453, Aug. 21, 2014]

§ 1253.6 Federal Register.

The location and business hours of the Office of the Federal Register are posted at *http://www.archives.gov*, and codified in 1 CFR 2.3.

[75 FR 71545, Nov. 24, 2010. Redesignated at 79 FR 49454, Aug. 21, 2014]

§ 1253.7 Federal holidays.

(a) NARA research rooms are closed on all Federal holidays.

(b) The exhibit areas in the National Archives Building are closed on Thanksgiving and December 25.

(c) The Presidential library museums are open every day except Thanksgiving, December 25, and January 1).

[75 FR 71545, Nov. 24, 2010. Redesignated and amended at 79 FR 49454, Aug. 21, 2014]

§ 1253.8 Notification process for changes in hours.

(a) NARA will follow the procedure found in § 1253.8(c) when proposing to change hours of operations for research rooms, exhibit areas and museums, except as noted in § 1253.8(d).

(b) Changing hours of operations for research rooms, exhibit areas and museums may not be arbitrary. Proposed changes must be documented by evidence of a business need to change the hours of operation.

(c) The notification process must proceed as follows:

(1) Post a notice on *http://www.archives.gov*.

(2) Post notices in areas visible to the public in their research room, exhibit areas or museum.

(3) Issue a press release, e-mail notification, or other means normally used by that unit to notify the public of events at their location.

(4) These notices will provide written determination justifying the change in hours.

(d) In the event that emergency changes to hours of operations for research rooms, exhibit areas and museums are necessary, including but not limited to inclement weather, NARA units will give as much advance notice to the public as possible. Emergency notification will be posted at *http://www.archives.gov*.

[75 FR 71545, Nov. 24, 2010. Redesignated and amended at 79 FR 49454, Aug. 21, 2014]

PART 1254—USING RECORDS AND DONATED HISTORICAL MATERIALS

Subpart A—General Information

Sec.

1254.1 What kinds of archival materials may I use for research?
1254.2 Does NARA provide information about documents?

1254.4 Where and when are documents available to me for research?
1254.6 Do I need a researcher identification card to use archival materials at a NARA facility?
1254.8 What information do I need to provide when applying for a researcher identification card?
1254.10 For how long and where is my researcher identification card valid?
1254.12 Will NARA log or inspect my computer, other equipment, and notes?
1254.14 Are some procedures in regional archives and Presidential libraries different from those in the Washington, DC, area?

Subpart B—Research Room Rules

GENERAL PROCEDURES

1254.20 What general policies apply in all NARA facilities where archival materials are available for research?
1254.22 Do I need to register when I visit a NARA facility for research?
1254.24 Whom does NARA allow in research rooms?
1254.26 What can I take into a research room with me?
1254.28 What items are not allowed in research rooms?
1254.30 Does NARA provide any supplies?
1254.32 What rules apply to public access use of the Internet on NARA-supplied computers?

RULES RELATING TO USING ORIGINAL DOCUMENTS

1254.34 What are my responsibilities when using documents?
1254.36 What care must I take when handling documents?
1254.38 How do I keep documents in order?
1254.40 How does NARA prevent removal of documents?

RULES RELATING TO USING MICROFILM

1254.42 What are the rules that apply to using self-service microfilm?
1254.44 How long may I use a microfilm reader?

OTHER CONDUCT RULES

1254.46 Are there other rules of conduct that I must follow?
1254.48 When does NARA revoke research privileges?
1254.50 Does NARA consider reinstating research privileges?
1254.52 Can NARA extend the period of revoked research privileges?

Subpart C—Copying Archival Materials

GENERAL INFORMATION

1254.60 What are NARA's copying services?
1254.62 Does NARA have archival materials protected by copyright?
1254.64 Will NARA certify copies?

RULES RELATING TO SELF-SERVICE COPYING

1254.70 How may I make my own copies of documents?
1254.72 What procedures do I follow to copy documents?
1254.74 What documents are unsuitable for copying on a self-service or personal copier or scanner?
1254.76 What procedures do I follow to copy formerly national security-classified documents?

RULES RELATING TO USING COPYING EQUIPMENT

1254.80 Does NARA allow me to use scanners or other personal copying equipment?
1254.82 What limitations apply to my use of self-service card-operated copiers?
1254.84 How may I use a debit card for copiers in the Washington, DC, area?
1254.86 May I use a personal paper-to-paper copier at the National Archives at College Park?
1254.88 What are the rules for the Motion Picture, Sound, and Video Research Room at the National Archives at College Park?

Subpart D—Microfilming Archival Materials

1254.90 What is the scope of this subpart?
1254.92 How do I submit a request to microfilm records and donated historical materials?
1254.94 What must my request include?
1254.96 What credits must I give NARA?
1254.98 May NARA make subsequent use of my publication?
1254.100 How does NARA evaluate requests?
1254.102 What requests does NARA not approve?
1254.104 How does NARA determine fees to prepare documents for microfilming?
1254.106 What are NARA's equipment standards?
1254.108 What are NARA's requirements for the microfilming process?
1254.110 Does NARA ever rescind permission to microfilm?

AUTHORITY: 44 U.S.C. 2101–2118.

SOURCE: 69 FR 39314, June 30, 2004, unless otherwise noted.

Subpart A—General Information

§ 1254.1 What kinds of archival materials may I use for research?

(a) The National Archives and Records Administration (NARA) preserves records of all three branches

(Executive, Legislative, and Judicial) of the Federal Government in record groups that reflect how government agencies created and maintained them. Most of these records are of Executive Branch agencies. We also have individual documents and collections of donated historical materials that significantly supplement existing records in our custody or provide information not available elsewhere in our holdings. Descriptions of many of our records are available through our Web site, *http://www.archives.gov*.

(b) We provide information about records and we make them available to the public for research unless they have access restrictions. Some records may be exempt from release by law. Donors may apply restrictions on access to historical materials that they donate to NARA. Access restrictions are further explained in part 1256 of this chapter. We explain procedures for obtaining information about records in § 1254.2.

(c) In addition to traditional paper (textual) materials, our holdings also include special media materials such as microfilm, still pictures, motion pictures, sound and video recordings, cartographic and architectural records, and electronic records. The majority of these materials are housed at the National Archives at College Park, 8601 Adelphi Road, College Park, MD 20740–6001. Many of these types of materials also are represented in the holdings of our Presidential libraries and our regional archives facilities listed in part 1253 of this chapter.

(d) The majority of our archival materials are 30 years old or older.

(e) Records creating agencies hold the legal title and control access to records housed in NARA records centers. Our procedures to obtain access to these records are in § 1256.2.

§ 1254.2 Does NARA provide information about documents?

(a) Upon request, we provide overall information about our holdings or about specific documents, if the time required to furnish the information is not excessive and if the information is not restricted (see part 1256 of this chapter). For anyone unable to visit, we may provide information contained in specific documents by offering copies of the documents for a fee (see § 1254.60).

(b) Requests must be on designated forms when we require them. The Office of Management and Budget (OMB) approves these forms as information collections and the forms bear the approved control number.

(c) If requests that we receive in the normal course of reference service do not specifically cite the Freedom of Information Act (5 U.S.C. 552, as amended), we do not consider those requests made under the Act. To make a request under the Act, follow the procedures in part 1250 of this chapter.

§ 1254.4 Where and when are documents available to me for research?

(a) You may obtain general information about the location of records by visiting the NARA Web site at *www.archives.gov;* writing to the National Archives and Records Administration (NWCC2), 8601 Adelphi Road, College Park, MD 20740–6001; completing our Inquire form at *http://www.archives.gov/global_pages/inquire_form.html;* sending a fax request to (301) 837–0483; or calling (202) 501–5400, (301) 837–2000, or toll free (866) 272–6272.

(b) The locations of NARA's research rooms are shown in part 1253 of this chapter. Hours for research rooms are posted at *http://www.archives.gov*. Contact our facilities directly for information about their particular holdings. A facility or unit director may authorize that documents be made available at times other than the times specified.

(c) Before planning a visit, contact the facility holding materials of potential interest to determine whether the documents are available, whether there are enough documents to warrant a visit, or whether ordering copies would be more practical.

(d) In addition to the procedures in this part, researchers who wish to use archival materials that contain national security classified information must follow procedures in part 1256 of this chapter.

[69 FR 39314, June 30, 2004, as amended at 75 FR 71547, Nov. 24, 2010]

§ 1254.6 Do I need a researcher identification card to use archival materials at a NARA facility?

(a) Yes, you need a researcher identification card to use original archival materials at a NARA facility. See §§ 1254.8 and 1254.10 for information on obtaining a card.

(b) You also need a researcher identification card if you wish to use only microfilm copies of documents at NARA's Washington, DC, area facilities and in any NARA facility where the microfilm research room is not separate from the textual research room.

(c) If you are using only microfilm copies of records in some regional archives where the microfilm research room is separate from the textual room, you do not need an identification card but you must register as described in § 1254.22.

[69 FR 39314, June 30, 2004, as amended at 75 FR 10415, Mar. 8, 2010]

§ 1254.8 What information do I need to provide when applying for a researcher identification card?

(a) You must apply in person and show identification containing your picture or physical description, such as a driver's license or school identification card. You also must provide proof of your current address, such as a bank statement, utility bill, or department of motor vehicles change of address card, if the address on your driver's license or other identification is not current. Students who consider the home of their parents as their permanent address, but who do not live there during the academic session, must provide their current student address. If you travel long distance to conduct research in original archival materials at a NARA facility, we may ask you how we can contact you locally. In special circumstances, the director of a facility or unit has the authority to grant exceptions to these requirements.

(b) If you apply for access to large quantities of documents or to documents that are especially fragile or valuable, we may require you to furnish additional information about reasons why you require access. Some materials are too fragile or valuable for direct handling or viewing. Preservation concerns (*see* §§ 1254.20(b) and 1254.36(e)) and availability of resources (*see* § 1254.20(c)) may limit our ability to accommodate certain requests.

(c) If you are younger than 14, you must follow the procedures in § 1254.24 to seek permission to conduct research.

(d) We do not issue you a researcher identification card if the appropriate supervisor or director of the NARA facility determines that the documents that you wish to use are not in the legal custody of NARA and you do not present appropriate written authorization from the legal title holder to examine the documents.

(e) The collection of information contained in this section has been approved by the Office of Management and Budget with the control number 3095–0016.

§ 1254.10 For how long and where is my researcher identification card valid?

(a) Your card is valid for 1 year and may be renewed. Cards we issue at one NARA facility are valid at each facility, except as described in paragraph (b) of this section. Cards are not transferable and you must present your card if a guard or research room attendant requests to see it.

(b) At NARA facilities in the Washington, DC, area and other NARA facilities that issue and use plastic researcher identification cards as part of their security systems, we issue a plastic card to replace the paper card issued at some NARA facilities at no charge. The plastic card is valid at all NARA facilities.

[69 FR 39314, June 30, 2004, as amended at 75 FR 10415, Mar. 8, 2010]

§ 1254.12 Will NARA log or inspect my computer, other equipment, and notes?

(a) If you bring personal computers, scanners, tape recorders, cameras, and other equipment into our facilities, we will inspect the equipment.

(1) In the Washington, DC, area, you must complete the Equipment Log at the guard's desk. The guard checks the log for proof of your personal ownership before you remove your equipment from the building.

(2) In the regional archives and Presidential libraries, we may tag your

equipment after inspection and approval.

(b) Not all NARA facilities permit you to take your personal notes into the research room. In research rooms that permit taking in your notes, a NARA or contractor employee may stamp, initial, and date notes and other research materials we approve for admission to indicate that they are your personal property.

(c) We inspect your personal property, including notes, electrostatic copies, equipment cases, tape recorders, cameras, personal computers, and other property, before you may remove them from our research rooms or facilities.

§ 1254.14 Are some procedures in regional archives and Presidential libraries different from those in the Washington, DC, area?

Yes, the variety of facilities, locations of research rooms, room sizes, and other factors contribute to differences in some, but not all, practices from the Washington, DC, area. When the appropriate regional director of archival operations or Presidential library director indicates, you must follow the procedures in regional archives and Presidential library archival research rooms where researchers use original documents. These procedures are in addition to the procedures we specify elsewhere in this part. The procedures are either posted in the facility or the staff gives copies of them to researchers.

Subpart B—Research Room Rules

GENERAL PROCEDURES

§ 1254.20 What general policies apply in all NARA facilities where archival materials are available for research?

(a) Researchers may use original documents only in the designated research room at the facility where they are stored.

(b) Researchers must use microfilm copies or other alternative copies of documents when available, rather than the original documents. Some of our microfilm publications are available in more than one NARA facility.

(c) We may limit the quantity of documents that we deliver to you at one time. In some research rooms, we furnish records according to a specific time schedule.

§ 1254.22 Do I need to register when I visit a NARA facility for research?

(a) Yes, you must register each day you enter a NARA research facility by furnishing the information on the registration sheet or scanning an encoded researcher identification card. We may ask you for additional personal identification.

(b) NARA facilities in the Washington, DC, area contain several research rooms; you must register in each research room you visit on a daily basis.

(c) In regional archives, you also sign out when leaving the research room for the day. In some Presidential libraries, where we instruct you to do so, you sign out when you leave the building.

[69 FR 39314, June 30, 2004, as amended at 75 FR 10415, Mar. 8, 2010]

§ 1254.24 Whom does NARA allow in research rooms?

(a) We limit admission to research rooms in our facilities to individuals examining or copying documents and other materials.

(b) We do not admit children under the age of 14 to these research rooms unless we grant them research privileges (*see* paragraph (d) of this section).

(c) The appropriate supervisor may make exceptions for a child who is able to read and who will be closely supervised by an adult while in the research room. The adult must agree in writing to be present when the child uses documents and to be responsible for compliance with the research room and copying rules in subparts B and C of this part.

(d) Students under the age of 14 who wish to perform research on original documents must apply in person at the facility where the documents are located. At the National Archives Building, apply to the chief of the Research Support Branch (NWCC1). At the National Archives at College Park, apply to the chief of the Research Support Branch (NWCC2). For regional archives and Presidential libraries, apply to the

appropriate supervisor or archivist in charge. We may require either that the student must present a letter of reference from a teacher or that an adult accompany the student while doing research. Students may contact NARA by phone, e-mail, fax, or letter in advance of their visit to discuss their eligibility for research privileges. Current contact information for our facilities is available on our Web site, *http://www.archives.gov*.

(e) We may permit adults and children participating in scheduled tours or workshops in our research rooms when they do not handle any documents that we show to them. These visitors do not need a researcher identification card.

§ 1254.26 What can I take into a research room with me?

(a) *Personal belongings*. You may take a hand-held wallet and coin purse for the carrying of currency, coins, credit cards, keys, driver's license, and other identification cards into research rooms, but these are subject to inspection when you enter or leave the room. The guard or research room attendant determines whether your wallet or purse is sufficiently small for purposes of this section. You may take cell phones, pagers, and similar telecommunications devices into a research room only under the circumstances cited in § 1254.46(b) and, for cell phone cameras, in § 1254.70(g).

(b) *Notes and reference materials*. You may take notes, references, lists of documents to be consulted, and other materials into a research room if the supervisor administering the research room or the senior staff member on duty in the research room determines that they are essential to your work requirements. Not all facilities permit you to take notes into the research room. In facilities that allow you to bring notes, staff may stamp your items to indicate that they are your property.

(c) You may bring back into the research room on subsequent visits your research notes made on notepaper and notecards we provide and electrostatic copies you make on copying machines in NARA research rooms which are marked with the statement ''Reproduced at the National Archives.'' You must show any notes and copies to the research room attendant for inspection when you enter the research room.

(d) Personal equipment. The research room attendant, with approval from the supervisor, archivist, or lead archives technician in charge of the room, may admit personal computers, tape recorders, scanners, cameras, and similar equipment if the equipment meets NARA's approved standards for preservation. We do not approve the use of any equipment that could potentially damage documents. If demand to use equipment exceeds the space available for equipment use, we may impose time limits. If you wish to use computers, sound recording devices, or other equipment, you must work in areas the research room attendant designates, when required.

§ 1254.28 What items are not allowed in research rooms?

(a) You may not bring into the research rooms overcoats, raincoats, jackets, hats, or other outerwear; personal paper-to-paper copiers, unless permitted in accordance with § 1254.86 of this part; briefcases, satchels, valises, suitcases, day packs, purses, boxes, or similar containers of personal property. We may make exceptions for headwear worn for religious or health reasons. In facilities where we provide notepaper and notecards, you also may not bring into the research room notebooks, notepaper, notecards, folders or other containers for papers.

(b) You may store personal items at no cost in lockers or other storage facilities in the NARA facility. These lockers or other storage facilities are available on a first-come-first-served basis.

(c) You must remove your personal belongings each night from the lockers or other storage facilities we provide to hold them. If you do not remove your personal belongings, NARA personnel will remove them. We post directions for reclaiming confiscated items near the lockers or other storage facilities.

(d) NARA is not responsible for the loss or theft of articles you store in the lockers.

(e) We may charge a replacement fee for lost locker keys.

(f) Knives and other sharp objects such as box cutters, razors, or wire are not permitted in our research rooms.

§ 1254.30 Does NARA provide any supplies?

Yes, in most facilities NARA furnishes you, without charge, pencils and specially marked lined and unlined notepaper and notecards, for use in the research rooms. NARA also provides diskettes and paper for our public access computers. Return unused pencils and notepaper, notecards, diskettes, and printer paper to the research room attendant at the end of the day.

§ 1254.32 What rules apply to public access use of the Internet on NARA-supplied computers?

(a) Public access computers (workstations) are available for Internet use in all NARA research rooms. The number of workstations varies per location. We provide these workstations for research purposes on a first-come-first-served basis. When others are waiting to use the workstation, we may impose a 30-minute time limit on the use of the equipment.

(b) You should not expect privacy while using these workstations. These workstations are operated and maintained on a United States Government system, and activity may be monitored to protect the system from unauthorized use. By using this system, you expressly consent to such monitoring and the reporting of unauthorized use to the proper authorities.

(c) You may not use these workstations to gain access to entertainment or other inappropriate Web sites in our research rooms. You also may not use these workstations to conduct private business not related to your research or NARA holdings.

(d) NARA provides at least one Internet access workstation in each facility that complies with the Workforce Investment Act of 1998, ensuring comparable accessibility to individuals with disabilities.

(e) You may download information to a diskette and print materials, but the research room staff will furnish the diskettes and paper. You may not use personally owned diskettes on NARA personal computers. You may not load files or any type of software on these workstations.

RULES RELATING TO USING ORIGINAL DOCUMENTS

§ 1254.34 What are my responsibilities when using documents?

(a) You must sign for the documents you receive and we may require you to show your researcher identification card.

(b) You are responsible for the proper handling of and prevention of damage to all documents delivered to you until you return them. Specific handling instructions are given in §§ 1254.36 and 1254.38.

(c) When you finish using the documents, you must return them to the research room attendant.

(d) You must not remove the reference service slip that accompanies the documents to the research room.

(e) If we ask, you must return documents up to 15 minutes before closing time.

(f) Before leaving a research room, even for a short time, you must notify the research room attendant and place all documents in their proper containers.

§ 1254.36 What care must I take when handling documents?

To prevent damage to documents, we have rules relating to the physical handling of documents.

(a) You must use only pencils in research rooms where original documents are used.

(b) You must not lean on, write on, refold, trace, or otherwise handle documents in any way likely to cause damage.

(c) You must follow any additional rules that apply to the use of special media records at our facilities, such as wearing cotton gloves we provide you for handling still pictures and any original film-based materials.

(d) You must identify documents for reproduction only with a paper tab that we provide you. You must not use paper clips, rubber bands, self-stick notes or similar devices to identify documents.

(e) You must use exceptionally valuable or fragile documents only under

conditions the research room attendant specifies.

(f) You must request that research room personnel unstaple or remove other fasteners from documents that cannot otherwise be read.

(g) If you notice damage to any document(s), notify the research room attendant immediately.

§ 1254.38 How do I keep documents in order?

(a) You must keep unbound documents in the order in which we deliver them to you.

(b) You must not attempt to rearrange documents that appear to be in disorder. Instead, you must refer any suspected problems with the records to the research room attendant.

(c) You may use only one folder at a time.

(d) Remove documents from only one container at a time.

§ 1254.40 How does NARA prevent removal of documents?

(a) You must not remove documents from a research room. Removing, mutilating, or revising or otherwise altering documents is forbidden by law and is punishable by fine or imprisonment or both (18 U.S.C. 2071).

(b) Upon leaving the research room or facility, you must present for examination any article that could contain documents or microfilm, as well as presenting copies or notes to ensure that no original records are mixed in with them.

(c) To ensure that no one unlawfully removes or mutilates documents, NARA may post at the entrance to research rooms instructions supplementing the rules in this part. These instructions are specific to the kinds of records you use or to the facility where the records are stored.

RULES RELATING TO USING MICROFILM

§ 1254.42 What are the rules that apply to using self-service microfilm?

NARA makes available microfilm copies of many records on a self-service basis.

(a) When microfilm is available on a self-service basis, research room attendants assist you in identifying research sources on microfilm and provide information concerning how to locate and retrieve the roll(s) of film containing the information of interest. You are responsible for retrieving and examining the roll(s).

(b) Unless you require assistance in learning how to operate microfilm reading equipment or have a disability, we expect you to install the microfilm on the reader, rewind it when finished, remove it from the reader, and return it to the proper microfilm box. You must carefully remove from and return to the proper microfilm boxes rewound microfilm. You must take care when loading and unloading microfilm from microfilm readers. Report damaged microfilm to the research room attendant as soon you discover it.

(c) Unless we make an exception, you may use only one roll of microfilm at a time.

(d) After using each roll, you must return the roll of microfilm to the location from which you removed it, unless we otherwise instruct you.

(e) You should bring to the attention of the research room attendant any microfilm you find in the wrong box or file cabinet.

§ 1254.44 How long may I use a microfilm reader?

(a) Use of the microfilm readers in the National Archives Building is on a first-come-first served basis.

(b) Archival operations directors at our regional archives may permit reservations for use of microfilm readers and set time limits on use to meet local circumstances.

[69 FR 39314, June 30, 2004, as amended at 75 FR 10415, Mar. 8, 2010]

OTHER CONDUCT RULES

§ 1254.46 Are there other rules of conduct that I must follow?

(a) Part 1280 specifies conduct rules for all NARA facilities. You must also obey any additional rules supplementing Subpart B of part 1254 that are posted or distributed by the facility director.

(b) You may not eat, drink, chew gum, smoke, or use smokeless tobacco products, or use a cell phone, pager, or similar communications device that emits sound signals in a research room.

Communications devices must be in vibrate mode. You must make and receive telephone calls outside of research rooms.

(c) We prohibit loud talking and other activities likely to disturb other researchers.

§ 1254.48 When does NARA revoke research privileges?

(a) Behaviors listed in paragraphs (a)(1) through (a)(4) of this section may result in NARA denying or revoking research privileges.

(1) Refusing to follow the rules and regulations of a NARA facility;

(2) Demonstrating by actions or language that you present a danger to documents or NARA property;

(3) Presenting a danger to other researchers, NARA or contractor employees, or volunteers; or

(4) Verbally or physically harassing or annoying other researchers, NARA or contractor employees, or volunteers.

(b) Denying or revoking research privileges means:

(1) We may deny or revoke your research privileges for up to 180 days;

(2) You lose research privileges at all NARA research rooms nationwide; and

(3) You lose your valid researcher identification card if you already have one.

(c) We notify all NARA facilities of the revocation of your research privileges.

(d) If we revoke your research privileges, we send you a written notice of the reasons for the revocation within 3 working days of the action.

§ 1254.50 Does NARA consider reinstating research privileges?

(a) You have 30 calendar days after the date of revocation to appeal the action in writing and seek reinstatement of research privileges. Mail your appeal to: Deputy Archivist of the United States, 8601 Adelphi Road, College Park, MD 20740–6001.

(b) The Deputy Archivist has 30 calendar days from receipt of an appeal to decide whether to reinstate your research privileges and to respond to you in writing.

(c) If the Deputy Archivist upholds the revocation of privileges or if you do not appeal, you may request in writing reinstatement of research privileges no earlier than 180 calendar days from the date we revoked privileges. This request may include application for a new researcher identification card.

(d) Our reinstatement of research privileges applies to all research rooms.

(e) If we reinstate your research privileges, we issue you a card for a probationary period of 60 days. At the end of the probationary period, you may apply for a new, unrestricted identification card, which we issue to you if your conduct during the probationary period follows the rules of conduct in this part and in part 1280 of this chapter.

[69 FR 39314, June 30, 2004, as amended at 76 FR 6555, Feb. 7, 2011]

§ 1254.52 Can NARA extend the period of revoked research privileges?

(a) If the reinstatement of research privileges would pose a threat to the safety of persons, property, or NARA holdings, or if, in the case of a probationary identification card, you fail to comply with the rules of conduct for NARA facilities, we may extend the revocation of privileges for additional 180-day periods. We send you a written notice of an extension within 3 workdays of our decision to continue the revocation of research privileges.

(b) You have 30 calendar days after the decision to extend the revocation of research privileges to appeal the action in writing. Mail your appeal to the Deputy Archivist at the address given in § 1254.50(a). The Deputy Archivist has 30 calendar days from receipt of your appeal to decide whether to reinstate your research privileges and to respond to you in writing.

[69 FR 39314, June 30, 2004, as amended at 76 FR 6555, Feb. 7, 2011]

Subpart C—Copying Archival Materials

GENERAL INFORMATION

§ 1254.60 What are NARA's copying services?

(a) You may order copies of many of our documents for a fee. Our fee schedule for copies is located in § 1258.12 of

this chapter. Exceptions to the fee schedule are located in § 1258.4. See § 1258.6 about reproductions NARA may provide without charging a fee.

(b) For preservation reasons, we do not make copies from the original documents if the documents are available on microfilm and a clear copy (electrostatic, photographic, or microfilm) can be made from the microfilm.

§ 1254.62 Does NARA have archival materials protected by copyright?

Yes, although many of our holdings are in the public domain as products of employees or agents of the Federal Government, some records and donated historical materials do have copyright protection. Particularly in the case of some special media records, Federal agencies may have obtained materials from private commercial sources, and these may carry publication restrictions in addition to copyright protection. Presidential records may also contain copyrighted materials. You are responsible for obtaining any necessary permission for use, copying, and publication from copyright holders and for any other applicable provisions of the Copyright Act (Title 17, United States Code).

§ 1254.64 Will NARA certify copies?

Yes, the responsible director of a unit, or any of his or her superiors, the Director of the Federal Register, and their designees may certify copies of documents as true copies for a fee. The fee is found at § 1258.12(a).

RULES RELATING TO SELF-SERVICE COPYING

§ 1254.70 How may I make my own copies of documents?

(a) Self-service copiers are available in some of our facilities. Contact the appropriate facility to ask about availability before you visit.

(b) In the Washington, DC, area, self-service card-operated copiers are located in research rooms. Other copiers we set aside for use by reservation are located in designated research areas. Procedures for use are outlined in §§ 1254.80 through 1254.84 of this subpart.

(c) You may use NARA self-service copiers where available after the research room attendant reviews the documents to determine their suitability for copying. The appropriate supervisor or the senior archivist on duty in the research room reviews the determination of suitability if you request.

(d) We may impose time limits on using self-service copiers if others are waiting to use them.

(e) In some of our facilities, you may use your own scanner or personal paper-to-paper copier to copy textual materials if the equipment meets our standards cited in §§ 1254.80 and 1254.86. Contact the appropriate facility for additional details before you visit.

(f) You must follow our document handling instructions in §§ 1254.36 and 1254.72. You also must follow our microfilm handling instructions in § 1254.42.

(g) You may use a hand-held camera with no flash or a cell phone camera to take pictures of documents only if you have the permission of the research room attendant.

(h) You may not use a self-service copier or personal scanner to copy some special media records. If you wish to copy motion pictures, maps and architectural drawings, or aerial photographic film, the appropriate staff can advise you on how to order copies. If you wish to obtain copies of electronic records files, the appropriate staff will assist you.

§ 1254.72 What procedures do I follow to copy documents?

(a) You must use paper tabs to designate individual documents you wish to copy. You must show the container including the tabbed documents to the research room attendant who determines whether they can be copied on the self-service copier. The manager of the staff administering the research room reviews the determination of suitability if you ask. After copying is completed, you must return documents removed from files for copying to their original position in the file container, you must refasten any fasteners removed to facilitate copying, and you must remove any tabs placed on the documents to identify items to be copied.

(b) If you are using a reserved copier, you must submit the containers of documents to the attendant for review before your appointment. The review time required is specified in each research room. Research room attendants may inspect documents after copying.

(c) You may copy from only one box and one folder at a time. After copying the documents, you must show the original documents and the copies to a research room attendant.

§ 1254.74 What documents are unsuitable for copying on a self-service or personal copier or scanner?

(a) Bound archival volumes (except when specialized copiers are provided).

(b) Documents fastened together by staples, clips, acco fasteners, rivets, or similar fasteners, where folding or bending documents may cause damage.

(c) Documents larger than the glass copy plate of the copier.

(d) Documents with uncancelled security classification markings.

(e) Documents with legal restrictions on copying.

(f) Documents that the research room attendant judges to be in poor physical condition or which may be subject to possible damage if copied.

§ 1254.76 What procedures do I follow to copy formerly national security-classified documents?

(a) We must properly cancel security classification markings (Confidential, Secret, Top Secret) and other restricted markings on declassified records before documents are copied. Only a NARA staff member can cancel security markings. Properly declassified documents bear the declassification authority as required by 32 CFR 2001.24.

(b) You may not remove from the research room copies of documents bearing uncancelled classification markings. We confiscate copies of documents with uncancelled markings.

(c) When you copy individual documents, the research room staff cancels the classification markings on each page of the copy and places the declassification authority on the first page of each document. If you copy only selected pages from a document, you must make a copy of the first page bearing the declassification authority and attach that page to any subsequent page(s) you copy from the document. You must show this declassification authority to the guard or research room attendant when you remove copies of documents from the research room or the building.

(d) Before you copy formerly-classified materials, we provide you with a declassification strip, which you attach to the copier. The strip reproduces on each page copied and cancels the security markings. We may also provide a declassification strip to attach to your personal copier or scanner.

(e) Staff at Presidential libraries cancel security markings before documents are provided to researchers in research rooms.

RULES RELATING TO USING COPYING EQUIPMENT

§ 1254.80 Does NARA allow me to use scanners or other personal copying equipment?

(a) Subject to §§ 1254.26(d) and 1254.86, you may use scanners and other copying equipment if the equipment meets certain conditions or minimum standards described in paragraphs (b) through (g) of this section. Exceptions are noted in paragraph (h). The supervisor administering the research room or the senior staff member on duty in the research room reviews the research room attendant's determination if you request.

(b) Equipment platens or copy boards must be the same size or larger than the records. No part of a record may overhang the platen or copy board.

(c) No part of the equipment may come in contact with records in a manner that causes friction, abrasion, or that otherwise crushes or damages records.

(d) We prohibit drum scanners.

(e) We prohibit automatic feeder devices on flatbed scanners. When using a slide scanner, we must check slides after scanning to ensure that no damage occurs while the slide is inside the scanner.

(f) Light sources must not raise the surface temperature of the record you copy. You must filter light sources that generate ultraviolet light.

(g) All equipment surfaces must be clean and dry before you use records. You may not clean or maintain equipment, such as replacing toner cartridges, when records are present. We do not permit aerosols or ammonia-containing cleaning solutions. We permit a 50 percent water and 50 percent isopropyl alcohol solution for cleaning.

(h) If you wish to use a scanner or other personal copier in a regional archives or Presidential library, contact the facility first for approval. Not all facilities permit the use of scanners or personal copying equipment because of space, electrical load concerns, and other reasons. Your request must state the space and power consumption requirements and the intended period of use.

(i) In facilities that provide a self-service copier or permit the use of personal paper-to-paper copiers or scanners, you must show documents you wish to copy to the research room attendant for approval.

(j) If you have any question about what is permissible at any given facility, consult with the facility before your visit. Contact information for our facilities is found in part 1253 of this chapter and at the NARA Web site, *http://www.archives.gov*.

§ 1254.82 What limitations apply to my use of self-service card-operated copiers?

(a) There is a 5-minute time limit on copiers in research rooms when others are waiting to use the copier. If you use a microfilm reader-printer, we may limit you to three copies when others are waiting to use the machine. If you wish to copy large quantities of documents, you should see a staff member in the research room to reserve a copier for an extended time period.

(b) If we must cancel an appointment due to copier failure, we make every effort to schedule a new mutually agreed-upon time. However, we do not displace researchers whose appointments are not affected by the copier failure.

§ 1254.84 How may I use a debit card for copiers in the Washington, DC, area?

Your research identification card can be used as a debit card if you arrange with the Cashier's Office to set up an account using cash, check, money order, debit card, or credit card. Your researcher identification card number as encoded on the card forms the basis of your account in the debit system. You may also purchase generic debit cards of values up to $20 each from the Cashier's Office using any of the above payment methods. When the Cashier's Office is closed or at any other time during the hours research rooms are open as cited in part 1253 of this chapter, you may use cash or credit card to purchase a debit card from the vending machines located in the research rooms. Inserting the debit card into a card reader connected to the copier enables you to make copies for the appropriate fee, which are found in § 1258.12 of this chapter. You can add value to your card using the vending machine in the research room or at the Cashier's Office. We do not make refunds.

[75 FR 10415, Mar. 8, 2010]

§ 1254.86 May I use a personal paper-to-paper copier at the National Archives at College Park?

(a) At the National Archives at College Park facility NARA approves a limited number of researchers to bring in and use personal paper-to-paper copying equipment in the Textual Research Room (Room 2000). Requests must be made in writing to the chief of the Research Support Branch (NWCC2), National Archives and Records Administration, 8601 Adelphi Rd., College Park, MD 20740–6001. Requests must identify the records you wish to copy, the expected duration of the project, and the make and model of the equipment.

(b) We evaluate requests using the following criteria:

(1) A minimum of 3,000 pages must be copied;

(2) The project is expected to take at least 4 weeks, with the copier in use a minimum of 6 hours per day or 30 hours per week;

(3) The copying equipment must meet our standards for preservation (*see* §§ 1254.26(d) and 1254.80); and

(4) Space is available for the personal copying project. NARA allows no more than 3 personal copying projects in the research room at one time, with Federal agencies given priority over other users.

(c) You must coordinate with research room management and oversee the installation and removal of copying equipment. You are responsible for the cost and supervision of all service calls and repairs. You must remove copying equipment and supplies within two business days after the personal copying project is completed.

(d) NARA is not responsible for any personal equipment or consumable supplies.

(e) You must be trained by NARA staff on the proper methods for handling and copying archival documents.

(f) You must abide by all regulations on copying stated in this subpart.

(g) We reserve the right to discontinue the privilege of using a personal copier at any time without notice. We discontinue your privilege if you violate one of the conditions in this subpart, we need to provide space for a Federal agency, or we lack staff to supervise the area.

(h) The collection of information contained in this section has been approved by the Office of Management and Budget with the control number 3095–0035.

[69 FR 39314, June 30, 2004, as amended at 69 FR 55505, Sept. 15, 2004]

§ 1254.88 What are the rules for the Motion Picture, Sound, and Video Research Room at the National Archives at College Park?

(a) We provide use of NARA viewing and listening equipment in the research room on a first-come-first-served basis. When others are waiting to use the equipment, we may impose a 3-hour limit on your use.

(b) You may use the NARA-furnished recorder or your personal recording device and media to make a copy of unrestricted archival materials in the research room.

(c) We provide you with a copy of the Motion Picture, Sound, and Video Research Room rules and a warning notice on potential copyright claims in unrestricted titles. You are responsible for obtaining any needed permission or release from a copyright owner for other than personal use of the copy.

(d) The research room attendant may inspect and tag your personal recording equipment before admitting you into the unrestricted viewing and copying area in the research room. You must place all equipment and accessory devices on the carts we provide, except that you may place a tripod holding a video camera on the floor in front of a film-viewing station. We are not responsible for damage to or loss of personal equipment and accessories.

(e) You must remain in the research room at your audio or film viewing station at all times while your personal equipment is in use. You must remove your personal equipment from the research room when you leave the room for the day. We cannot be responsible for any damage to or loss of your equipment.

(f) We are not responsible for assisting with ''hook-up'' to NARA viewing equipment, for providing compatibility between the personal recording equipment and NARA viewing equipment, or for the quality of the copies you make. We provide you information on the types of NARA equipment that we have in the research room and on the cables necessary for hook-up to our viewing equipment.

(g) When you bring audio or video recording tapes or cassettes into the unrestricted area of the research room, the research room attendant marks the recording media ''NARA-approved personal property'' for identification purposes. We inspect this media before you leave the research room and when you leave the research complex at the National Archives at College Park.

(h) You may reserve a NARA-furnished video copying station and 120-minute blank video cassette, for a fee, on a first-come-first-served basis for 90 minutes. If no one else is waiting to use the station, you may reserve an additional 90 minutes. You may not connect personal recording devices to NARA equipment at the video copying

station. You may use only NARA-provided tapes at the video copying station. Fees for use of the station and blank cassette are specified in § 1258.12 of this chapter.

(i) You may not take any personal recording device or media in the restricted viewing area in the research room.

Subpart D—Microfilming Archival Materials

§ 1254.90 What is the scope of this subpart?

(a) This subpart establishes rules and procedures for the use of privately owned microfilm equipment to film accessioned archival records and donated historical materials in NARA's legal and physical custody by:

(1) Foreign, Federal, state, and local government agencies;

(2) Private commercial firms;

(3) Academic research groups; or

(4) Other entities or individuals that request exemption from obtaining copies through the regular fee schedule reproduction ordering system of NARA.

(b) If you wish to microfilm Federal agency records in the physical custody of the Washington National Records Center (WNRC), contact the director, WNRC, about procedures for obtaining permission from the originating agency to film those records (*see* § 1253.4). For information about procedures for obtaining permission from the originating agency to film records in the records center operation of one of NARA's regional records facilities or in the physical custody of the National Personnel Records Center (NPRC), contact the Regional Administrator of the region in which the records are located (*see* § 1253.6), or the director, NPRC, for records in NPRC (*see* § 1253.5).

(c) Federal agencies that need to microfilm archival records in support of the agency's mission must contact the appropriate office as specified in § 1254.92(a) as soon as possible after the need is identified for information concerning standards and procedures that apply to their microfilming of archival records.

§ 1254.92 How do I submit a request to microfilm records and donated historical materials?

(a) You must submit your request to microfilm materials to the appropriate office.

(1) Submit your written request to microfilm archival records or donated historical materials (except donated historical materials under the control of the Office of Presidential Libraries) in the Washington, DC, area to the Assistant Archivist for Records Services—Washington, DC (NW), 8601 Adelphi Rd., College Park, MD 20740–6001.

(2) Submit your written request to microfilm archival records or donated historical materials in a NARA regional archives to the Assistant Archivist for Regional Records Services (NR), 8601 Adelphi Rd., College Park, MD 20740–6001.

(3) Submit your written request to microfilm records or donated historical materials in a Presidential library or donated historical materials in the Washington area under the control of the Office of Presidential Libraries to the Assistant Archivist for Presidential Libraries (NL), 8601 Adelphi Rd., College Park, MD 20740–6001.

(4) OMB control number 3095–0017 has been assigned to the information collection contained in this section.

(b) You must submit your request to use privately owned microfilm equipment four months in advance of the proposed starting date of the microfilming project. If you submit your request with less advance notice, we consider it and may approve it if we have available adequate NARA space and staff and if you can complete all training, records preparation, and other NARA requirements in a shorter time frame.

(1) You may include in your request only one project to microfilm a complete body of documents, such as an entire series, a major continuous segment of a very large series which is reasonably divisible, or a limited number of separate series related by provenance or subject.

(2) We do not accept additional requests from an individual or organization to microfilm records in a NARA

facility while we evaluate an earlier request from that individual or organization to microfilm records at that facility.

(3) We establish the number of camera spaces available to a single project based upon the total number of projects approved for filming at that time.

§ 1254.94 What must my request include?

(a) A description of the documents you wish to copy that includes the following elements:

(1) Record group number or agency of origin or, for donated historical materials, title of the collection;

(2) Title of series or file segment;

(3) Date span; and

(4) Estimated volume in number of pages or cubic feet.

(b) The estimated amount of time (work-days) that the microfilm copying project will take; the date that you would like to begin the project; and the number of persons who would require training (*see* § 1254.108(b)).

(c) The number and a description of the equipment that you will use for copying including:

(1) The name of the manufacturer and model number; and

(2) The type of light source to be employed (fluorescent, tungsten, or electronic flash) and if electronic flash (*i.e.*, strobe) or fluorescent, whether the light source is filtered to omit ultraviolet radiation.

(d) A statement of the procedures that you will follow to ensure that you copy all pages, that the images on the microfilm are legible, and that the microfilm is properly processed. At a minimum, the procedures should meet the requirements specified in part 1230 of this chapter regarding the microfilming of permanent records.

§ 1254.96 What credits must I give NARA?

(a) You must agree to credit NARA as having custody of the original documents. The credit must appear at the beginning of a microfilm publication and in any publicity material or descriptions of the publication.

(b) If the original documents are Federal records, you must agree to include on the film this statement: ''The documents reproduced in this publication are among the records of the (name of agency) in the custody of the National Archives of the United States. (Name of microfilm publication producer) does not claim any copyright interest in these official U.S. Government records.''

(c) If the original documents are donated historical materials, you must agree to include on the film this statement: ''The documents reproduced in this publication are donated historical materials from (name of donor) in the custody of the (name of Presidential library or National Archives of the United States). The National Archives and Records Administration administers them in accordance with the requirements of the donor's deed of gift and the U.S. Copyright Law, Title 17, U.S.C. (Name of microfilm publication producer) does not claim any copyright interest in these donated historical materials.''

(d) If the original documents are Presidential or Vice-Presidential records as specified in 44 U.S.C. 2201, you must agree to include on the film this statement: ''The documents reproduced in this publication are Presidential records in the custody of the (name of Presidential library or National Archives of the United States). The National Archives and Records Administration administers them in accordance with the requirements of Title 44, U.S.C. (Name of microfilm publication producer) does not claim any copyright interest in these official Presidential records.''

(e) If the original documents are records of Congress, you must agree to include on the film this statement: ''The documents reproduced in this publication are among the records of the (House of Representatives/Senate) in the physical custody of the National Archives and Records Administration (NARA). NARA administers them in accordance with the requirements of the (House/Senate). (Name of microfilm publication producer) does not claim any copyright interest in these official congressional records.''

§ 1254.98 May NARA make subsequent use of my publication?

You must give NARA a royalty-free worldwide license, to take effect seven years after you complete filming at the NARA facility, to publish, display, reproduce, distribute, and sell the publication, and to create derivative works based on the publication, and to use the publication in collective works, all without limitation. The license required by this section must be written to take effect upon publication if there is no commercial distributor, or once commercial distribution ends if less than seven years from the date you complete filming at the NARA facility.

§ 1254.100 How does NARA evaluate requests?

(a) NARA evaluates requests by estimating how well completion of a proposed project would further our efforts to preserve and to make available to the public the historically valuable records of the Government.

(b) In considering multiple requests to film at the same time, we give priority to microfilming records that have research value for a variety of studies or that contain basic information for fields of research in which researchers have demonstrated substantial interest.

(c) The records to be filmed should be reasonably complete and not subject to future additions, especially of appreciable volumes, within the original body of records. Records with pending or future end-of-series additions are appropriate for filming.

(d) The records to be filmed should not have substantial numbers of documents withdrawn because of continuing national security classification, privacy, or other restrictions.

(e) We approve only requests to microfilm a complete body of documents, such as an entire series or a major continuous segment of a very large series that is reasonably divisible. Microfilming a complete body of documents means that you must consecutively copy all documents within the file unit(s), from the first to the last page, not skipping any pages in between except for pages that are exact duplicates or blank pages that are not included in a pagination scheme.

(f) We normally approve only requests that include assurances that the project will adhere to the specifications in part 1230 of this chapter concerning microfilm stock standards, index placement, and microfilm processing for permanent records.

(g) We approve only requests that specify that NARA will receive a first generation silver halide duplicate negative containing no splices made from the original camera negative of the microform record created in accordance with part 1230 of this chapter.

(1) We may use this duplicate negative microform to make duplicate preservation and reference copies. The copies may be made available for NARA and public use in NARA facilities and programs immediately upon receipt.

(2) We may also make additional use of the microform, as indicated in § 1254.98, seven years after you complete filming at the NARA facility, or upon delivery of the publication if there is no commercial distributor, or when the commercial distributor is no longer available, whichever occurs first. We may choose to add our own editorial material to the microform copies.

(3) You must deliver detailed roll lists with the microfilm. The lists must give the full range of file titles and a complete list of all file numbers on each roll of microfilm. We prefer that the list be provided in a fielded, electronic format to facilitate its use by staff and researchers. If the electronic format is a data file with defined or delimited fields, you should transfer with the file the records layout identifying the fields, any coded values for fields, and explanations of any delimiters.

(4) Microfilm projects may donate to us additional indexes and finding aids. NARA and the microfilm project execute a deed of gift that specifies restrictions on NARA's use and dissemination of these products under mutually acceptable terms.

§ 1254.102 What requests does NARA not approve?

(a) We do not approve any request that does not include all of the information we require in §§ 1254.94 and 1254.96.

(b) We do not normally approve requests to microfilm documents that:

(1) Have previously been microfilmed and made available to the public;

(2) We have approved for microfilming by another party; or

(3) We plan to film as a NARA microfilm publication or which relate closely to other documents previously microfilmed or approved for microfilming by NARA. We may grant exceptions to this provision at our discretion.

(c) We normally do not approve requests to microfilm documents:

(1) Having restrictions on access that preclude their reproduction;

(2) Known to be protected by copyright;

(3) Having high intrinsic value that only authorized NARA personnel may handle;

(4) In vulnerable physical condition;

(5) Having a high research demand and which we would have to deny to others for an extended period of time during the microfilming process. Where possible, we assist you in developing filming schedules that avoid the need to close documents for a lengthy period of time; and

(6) In formats, such as oversize documents, bound volumes, and others, that would be subject to excessive stress and possible damage from special equipment you plan to use, as well as documents fastened with grommets, heavy duty staples, miscellaneous fasteners, or wafers and other adhesives that cannot be removed without tearing or breaking documents.

(d) We normally do not approve requests from persons or organizations that failed to produce usable microfilm or to honor commitments they made in previous requests, or for whom we have had to rescind previous permission to microfilm documents because of their conduct.

(e) We do not approve requests to microfilm records in NARA facilities in which there is insufficient space available for private microfilming. We do not permit private microfilming in our records storage (stack) areas.

(1) Federal agencies microfilming records in support of the agency's mission may use the space set aside for private microfilming. Agency microfilming takes priority over private microfilming when there is insufficient space to accommodate both at the same time.

(2) When a NARA facility does not have enough space to accommodate all requests, we may schedule separate projects by limiting the time allowed for each particular project or by requiring projects to alternate their use of the space.

(3) We also do not approve requests where the only space available for filming is in the facility's research room, and such work would disturb researchers. We do not move records from a facility lacking space for private microfilming to another NARA facility for that purpose.

(f) We do not approve requests to microfilm records when there is not enough staff to provide the necessary support services, including document preparation, training of private microfilmers, and monitoring the filming.

(g) We do not approve the start of a project to microfilm records until you have agreed in writing to the amount and schedule of fees for any training, microfilm preparation, and monitoring we must conduct that is necessary to support your project. Our letter of tentative approval for the project includes an agreement detailing the records in the project and the detailed schedule of fees for NARA services for the project. We give final approval when we receive your signed copy of the agreement.

§ 1254.104 How does NARA determine fees to prepare documents for microfilming?

(a) As part of our evaluation of a request to microfilm documents, we determine the amount of microfilm preparation that we must do before you can microfilm the documents and the estimated cost of such preparation. We base fees for microfilm preparation on direct salary costs (including benefits) and supply costs when we perform the work. When a NARA contractor performs the work, the fees are the cost to NARA. Microfilm preparation includes:

(1) Removing document fasteners from documents when the fasteners can be removed without damage to the documents; and

(2) Taking any document conservation actions that must be accomplished in order to film the documents, such as document flattening or mending.

(b) We provide you detailed information on the fees for microfilm preparation in the letter of approval. You must pay fees in accordance with § 1258.14 of this chapter. When a body of documents requires extensive microfilm preparation, we may establish a different payment schedule at our discretion.

§ 1254.106 What are NARA's equipment standards?

(a) Because we have limited space in many NARA facilities, microfilm/fiche equipment should be operable from a table top unless we have given written permission to use free standing/floor model cameras. You may only use planetary type camera equipment. You may not use automatic rotary cameras and other equipment with automatic feed devices. We may approve your use of book cradles or other specialized equipment designed for use with bound volumes, oversized documents, or other formats, as well as other camera types not specified here, on a case-by-case basis.

(b) The power consumption of the equipment normally must not exceed 1.2 kilowatts. Power normally available is 115 volts, 60 hz. You must make requests for electricity exceeding that normally available at least 90 days in advance.

(c) You may not use equipment having clamps or other devices to exert pressure upon or to attach the document to any surface in a way that might damage the document.

(d) The equipment must not use a heat generating light source in close enough proximity to the documents to result in their physical distortion or degradation. All sources of ultraviolet light must be filtered.

§ 1254.108 What are NARA's requirements for the microfilming process?

(a) Your equipment must conform to the equipment standards in § 1254.106.

(b) You must handle documents according to the training and instructions provided by our staff so that documents are not damaged during copying and so that their original order is maintained. Only persons who have attended NARA training will be permitted to handle the documents or supervise microfilming operations. We charge you fees for training services and these fees will be based on direct salary costs (including benefits) and any related supply costs. We specify these fees in the written agreement we require for project approval in § 1254.102(h).

(c) You may microfilm documents from only one file unit at a time. After you complete microfilming, you must return documents you removed from files for microfilming to their original position in the file container, refasten any fasteners you removed to facilitate copying, and remove any tabs you placed on the documents to identify items to copy. We will provide fasteners for replacement as necessary.

(d) You may not leave documents unattended on the copying equipment or elsewhere.

(e) Under normal microfilming conditions, actual copying time per sheet must not exceed 30 seconds.

(f) You must turn off any lights used with the camera when the camera is not in actual operation.

(g) You may operate microfilm equipment only in the presence of the research room attendant or a designated NARA employee. If NARA places microfilm projects in a common research area with other researchers, the project will not be required to pay for monitoring that is ordinarily provided. If the microfilm project is performed in a research room set aside for copying and filming, we charge the project fees for these monitoring services and these fees will be based on direct salary costs (including benefits). When more than one project share the same space, monitoring costs will be divided equally among the projects. We specify the monitoring service fees in the written agreement required for project approval in § 1254.102(h).

(h) The equipment normally should be in use each working day that it is in a NARA facility. The director of the NARA facility (as defined in § 1252.2 of this chapter) decides when you must remove equipment because of lack of

regular use. You must promptly remove equipment upon request of the facility director.

(i) We assume no responsibility for loss or damage to microfilm equipment or supplies you leave unattended.

(j) We inspect the microform output at scheduled intervals during the project to verify that the processed film meets the microfilm preparation and filming standards required by part 1230 of this chapter. To enable us to properly inspect the film, we must receive the film within 5 days after it has been processed. You must provide NARA with a silver halide duplicate negative of the filmed records (*see* §1254.100(g)) according to the schedule shown in paragraph (k). If the processed film does not meet the standards, we may require that you refilm the records.

(k) When you film 10,000 or fewer images, you must provide NARA with a silver halide duplicate negative upon completion of the project. When the project involves more than 10,000 images, you must provide a silver halide duplicate negative of the first completed roll or segment of the project reproducing this image count to NARA for evaluation. You also must provide subsequent completed segments of the project, in quantities approximating 100,000 or fewer images, to NARA within 30 days after filming unless we approve other arrangements.

(l) If the microfilming process is causing visible damage to the documents, such as flaking, ripping, separation, fading, or other damage, filming must stop immediately and until the problems can be addressed.

§1254.110 Does NARA ever rescind permission to microfilm?

We may, at any time, rescind permission to microfilm records if:

(a) You fail to comply with the microfilming procedures in §1254.108;

(b) Inspection of the processed microfilm reveals persistent problems with the quality of the filming or processing;

(c) You fail to proceed with the microfilming or project as indicated in the request, or

(d) The microfilming project has an unanticipated adverse effect on the condition of the documents or the space set aside in the NARA facility for microfilming.

(e) You fail to pay NARA fees in the agreed to amount or on the agreed to payment schedule.

PART 1256—ACCESS TO RECORDS AND DONATED HISTORICAL MATERIALS

Subpart A—General Information

Sec.
1256.1 What does this part cover?
1256.2 How do I obtain access to records stored in Federal Records Centers?
1256.6 How do I obtain access to records of defunct agencies?
1256.8 How do I obtain access to Presidential records?
1256.10 How do I obtain access to Nixon Presidential materials?

Subpart B—Access to Federal Archival Records

1256.20 May I obtain access to Federal archival records?
1256.22 How do I request access to restricted information in Federal archival records?
1256.24 How long may access to some records be denied?
1256.26 When can I appeal decisions about access to Federal archival records?
1256.28 Does NARA make any exceptions for access to records containing privacy-restricted information?

Subpart C—Access to Donated Historical Materials

1256.30 How do I obtain access to donated historical materials?
1256.32 How do I request access to restricted information in donated historical materials?
1256.34 How long may access to some donated historical materials be denied?
1256.36 When can I appeal decisions about access to donated historical materials?

Subpart D—General Restrictions

1256.40 What are general restrictions?
1256.42 Who imposes general restrictions?
1256.44 Does NARA ever waive general restrictions?
1256.46 National security-classified information.
1256.48 Information about internal agency rules and practices.
1256.50 Information exempted from disclosure by statute.
1256.52 Trade secrets and commercial or financial information.

1256.54 Inter- and intra-agency memoranda (subject to privilege).
1256.56 Information that would invade the privacy of a living individual.
1256.58 Information related to law enforcement investigations.
1256.60 Information relating to financial institutions.
1256.62 Geological and geophysical information relating to wells.

Subpart E—Access to Materials Containing National Security-Classified Information

1256.70 What controls access to national security-classified information?
1256.72 What are FOIA requests and mandatory review requests?
1256.74 How does NARA process Freedom of Information Act (FOIA) requests for classified information?
1256.76 How do I request mandatory review of classified information under Executive Order 12958, as amended?
1256.78 How does NARA handle my mandatory review request?
1256.80 How does NARA provide classified access to historical researchers and former Presidential appointees?

Subpart F—Domestic Distribution of United States Information Agency Audiovisual Materials in the National Archives of the United States

1256.90 What does this subpart cover?
1256.92 What is the purpose of this subpart?
1256.94 Definition.
1256.96 What provisions apply to the transfer of USIA audiovisual records to the National Archives of the United States?
1256.98 Can I get access to and obtain copies of USIA audiovisual records transferred to the National Archives of the United States?
1256.100 What is the copying policy for USIA audiovisual records that either have copyright protection or contain copyrighted material?
1256.102 What fees does NARA charge?

AUTHORITY: 44 U.S.C. 2101–2118; 22 U.S.C. 1461(b); 5 U.S.C. 552; E.O. 12958 (60 FR 19825, 3 CFR, 1995 Comp., p. 333; E.O. 13292, 68 FR 15315, 3 CFR, 2003 Comp., p. 196; E.O. 13233, 66 FR 56023, 3 CFR, 2001 Comp., p. 815.

SOURCE: 69 FR 39325, June 30, 2004, unless otherwise noted.

Subpart A—General Information

§ 1256.1 What does this part cover?

This part describes NARA's policies on access to archival records of the Executive Branch and donated historical materials in the National Archives of the United States and to records in the physical custody of the Federal records centers. This part applies to records and materials covered by the Federal Records Act (44 U.S.C. 2108 and chs. 29, 31, 33) and donated historical materials. This part does not apply to Presidential, Supreme Court, Senate, House of Representatives, and Architect of the Capitol records except for the purpose of directing mandatory review requests in subpart E.

§ 1256.2 How do I obtain access to records stored in Federal Records Centers?

Agencies that retire their records to a Federal records center (FRC) set rules for access to those records. Address requests for access to records stored in Federal records centers directly to the appropriate agency or to the appropriate FRC director at the address shown in part 1253. When the agency's rules permit, NARA makes FRC records available to requesters. When the agency's rules and restrictions do not permit access FRCs receive requests that should have been sent to the agency, the FRC director refers the requests and any appeals for access, including those made under the Freedom of Information Act (5 U.S.C. 552, as amended), to the responsible agency.

§ 1256.6 How do I obtain access to records of defunct agencies?

NARA handles access to archives and FRC records received from agencies that have ceased to exist without a successor in function as described in Subpart B.

§ 1256.8 How do I obtain access to Presidential records?

See 36 CFR part 1270, Presidential Records, for the rules for access to Presidential records transferred to NARA.

§ 1256.10 How do I obtain access to Nixon Presidential materials?

See 36 CFR part 1275, Preservation and Protection of and Access to the Presidential Historical Materials of the Nixon Administration, for the rules for access to Nixon Presidential materials.

Subpart B—Access to Federal Archival Records

§ 1256.20 May I obtain access to Federal archival records?

(a) Most Federal archival records are open for research without submitting a Freedom of Information Act (FOIA) request. Part 1254 specifies procedures for using unrestricted records in a NARA research room, submitting reference requests, and ordering copies of records.

(b) Some records are subject to restrictions prescribed by statute, Executive Order, or by restrictions specified in writing in accordance with 44 U.S.C. 2108 by the agency that transferred the records to the National Archives of the United States. All agency-specified restrictions must comply with the FOIA. Even if the records are not national-security classified, we must screen some records for other information exempt from release under the FOIA.

§ 1256.22 How do I request access to restricted information in Federal archival records?

(a) You may file a FOIA request. To request access under the provisions of the FOIA, see part 1250 of this chapter, Public Availability and Use of Federal Records.

(b) For classified information in Federal records, you may file a FOIA request or a mandatory review request under Executive Order 12958, as amended, as described in § 1256.74.

§ 1256.24 How long may access to some records be denied?

(a) Although many records are open for research, some records are closed for long periods, either under our general restrictions, described in subpart D of this part, or another governing authority. For example, in accordance with 44 U.S.C. 2108(b), we do not grant access to restricted census and survey records of the Bureau of the Census less than 72 years old containing data identifying individuals enumerated in population censuses.

(b) Screening records takes time. We screen records as soon as possible and can often make most of the records in which you are interested available. In the case of electronic structured databases, NARA can make a copy of records with restricted information masked. In response to FOIA requests for records in other media, we make a copy of the record available if we can mask or ''redact'' restricted information.

§ 1256.26 When can I appeal decisions about access to Federal archival records?

(a) For information on filing appeals for requests made under the FOIA, see 36 CFR part 1250, subpart D, Appeals.

(b) For information on filing appeals for requests made under mandatory review, see § 1260.54 of this chapter.

§ 1256.28 Does NARA make any exceptions for access to records containing privacy-restricted information?

(a) *NARA policy*. Access to archival records containing information access to which would invade the privacy of an individual is restricted by § 1256.56.

(1) NARA may authorize access to such records for the purpose of research to qualified persons doing biomedical or social science research under the conditions outlined in this section as long as the records do not also contain information restricted by statute or national security-classified information.

(2) If NARA is able to make a copy of such records with all personal identifiers masked or deleted, NARA will make such a ''sanitized'' copy of the record available to all researchers in accordance with § 1256.24.

(3) NARA will not grant access to restricted census and survey records of the Bureau of the Census less than 72 years old containing data identifying individuals enumerated in population censuses in accordance with 44 U.S.C. 2108(b).

(b) *Request for access*. Researchers who wish to have access to records restricted by § 1256.56 to conduct biomedical or social science research must submit a written request to the NARA FOIA/Privacy Act Officer (NGC), National Archives and Records Administration, 8601 Adelphi Road, College Park, MD 20740–6001. OMB control number 3095–0002 has been assigned to this collection of information requirement. Researchers are encouraged to consult

informally with NARA before submitting the formal request. The request must include the following information:

(1) Name and mailing address;

(2) Institutional affiliation and position, if applicable;

(3) List of published research, if applicable;

(4) References from two persons who have first-hand knowledge of the requester's qualifications to perform the research;

(5) A statement of the nature of the research to be conducted and any plans for publication or presentation of the research findings;

(6) A listing of all sources of grant funds supporting the research project or its publication;

(7) A statement of the methodology to be used;

(8) A statement of the administrative, technical, and physical safeguards to be employed by the researcher to prevent unauthorized use or disclosure of the records;

(9) A listing of the record groups and series titles to be used; and

(10) A statement that the researcher will abide by the conditions of access to be prescribed by NARA and that the researcher will assume responsibility for the action of all persons working with the researcher on the project.

(c) *Access Review Committee.* Requests made under paragraph (b) of this section will be reviewed by NARA's Access Review Committee, which is composed of the Deputy Archivist of the United States, the Assistant Archivist for the Office of Records Services—Washington, DC, the Assistant Archivist for the Official of Regional Records Services, and the director(s) of the NARA division(s) that has custody of the requested records. The Committee may consult other persons within and outside the Federal Government who are knowledgeable in the research field for assistance in evaluating a request.

(1) The Committee will examine the request to determine whether:

(i) The requested information is of such a highly sensitive personal nature that disclosure must not be permitted even for biomedical or social science research;

(ii) The methodology proposed by the requester will permit the researcher to obtain the projected research results without revealing personally identifying information;

(iii) The research results are intended to be published or presented at an academic or research conference;

(iv) The requester is a biomedical or social science researcher who has previous research experience and has submitted or intends to submit articles or books on such research for publication;

(v) The safeguards proposed by the requester will adequately protect the personal information; and

(vi) NARA has sufficient staff and space available to safeguard privacy interests necessary to accommodate the research project.

(2) The decision of the Committee will be made in writing to the requester within 15 workdays after receipt of a completed request. At the discretion of the Committee, the researcher may meet with the Committee to discuss the project or to discuss revising the research proposal to meet possible objections of the Committee.

(d) *Conditions of access.* Researchers who are granted access to restricted records, all others associated with the research project who will have access to personally identifiable information from the records, and the manager of any facility handling the records containing personal identifiers must agree in writing to maintain the confidentiality of the information and to adhere to the conditions of access imposed by NARA. NARA will impose the following conditions of access on any project; additional conditions may be imposed on the use of specific records or on specific projects:

(1) The records may be used only for the purpose of the research and for the reporting of research findings as described in the approved research project. The records may not be used for any other purpose;

(2) The records and any authorized copies of records may not be transferred to any person or institution not directly involved with the approved research project and subject to a written agreement to maintain confidentiality specified in § 1256.28(d);

(3) Reasonable administrative, technical, and physical safeguards, as approved by NARA, to prevent unauthorized use or disclosure of the records must be established by the researcher and followed by all persons associated with the project;

(4) When required by NARA, the records must be consulted at the NARA facility where the records are located;

(5) The researcher's notes must not contain any individually identifiable information. The researcher must use an alternate code system to render personally identifiable information as anonymous in all research notes;

(6) Persons who are identified in the records may not be contacted by or on behalf of the researcher;

(7) Before publication or public presentation of the data, the final research product(s) must be provided to the Deputy Archivist of the United States for review. NARA's review is limited to ensuring that there is no possible identification of individuals in the research findings. NARA will not evaluate the validity of the research findings.

(e) *Noncompliance with conditions of access.* If we discover that a researcher has violated any of the conditions of access, we will take steps to revoke the NARA research privileges of that person and will consult with NARA's General Counsel or his or her designee to determine any other steps to be taken to prevent any further disclosure of the personal information concerned. NARA may also inform the following persons and organizations of the researcher's failure to follow the conditions of use:

(1) The institution with which the researcher is affiliated, if applicable;

(2) Persons who served as references in the application for access;

(3) Organizations that provided grant funds for the project;

(4) The sponsor of the publication or public presentation; and

(5) Appropriate professional organizations.

Subpart C—Access to Donated Historical Materials

§ 1256.30 How do I obtain access to donated historical materials?

NARA encourages researchers to confer about donated historical materials with the appropriate director or reference staff member at the facilities listed in part 1253 of this chapter. Some donated historical materials have restrictions on their use and availability as stated in writing by the donors in the Donor's Deed of Gift. Some may have other restrictions imposed by statute or Executive Order. If warranted, the Archivist may apply general restrictions to donated materials even when not specified in the donor's deed of gift. NARA staff can assist you with questions about restrictions or copyright protection that may apply to donated materials. See § 1256.36 for information on appealing closure of donated materials and subpart D of this part for information about general restrictions.

§ 1256.32 How do I request access to restricted information in donated historical materials?

(a) At Presidential libraries and regional archives, you may write to the appropriate director at the facilities in part 1253 of this chapter. In the Washington, DC, area, you may write to the Director of Access Programs (NWC) for donated textual materials or the Director of Modern Records Programs (NWM) for donated electronic records. The mailing address for NWC and NWM is Office of Records Services—Washington, DC, 8601 Adelphi Road, College Park, MD 20740–6001.

(b) You may request a review of documents restricted under terms of a donor's deed of gift or other legal instrument to determine whether the conditions originally requiring the closure still exist. Your request must describe each document requested so that the staff can locate it with a reasonable amount of effort. For files that NARA previously screened, you may cite the reference to the withheld document as it appears on the withdrawal sheet.

(c) In many instances, the director or his or her designated representative will determine whether entire documents or portions of them can be opened. However, a donor or his or her representative reserves the right to determine whether the donor's materials, a series, or a document or portions of it should remain closed (*see* § 1256.36).

(d) For classified information in donated historical materials, you may file a mandatory review request under Executive Order 12958, as amended, as described in § 1256.74.

§ 1256.34 How long may access to some donated historical materials be denied?

Some donated historical materials are closed for long periods, either under the provisions of the deed of gift, our general restrictions described in subpart D of this part, or another governing authority. We are sometimes able to make a copy of materials with restricted information redacted.

§ 1256.36 When can I appeal decisions about access to donated historical materials?

(a) If you wish to appeal a denial of access from the director or his designated representative in implementing the provisions of a donor's deed of gift, you may write a letter addressed to the Deputy Archivist of the United States, National Archives and Records Administration, 8601 Adelphi Road, College Park, MD 20740–6001. The Deputy Archivist, the Assistant Archivist for Presidential Libraries, and the Assistant Archivist for Records Services—Washington, DC, or their designated representatives, compose the Board of Review for appeals relating to donated historical materials.

(b) The board's decision is final. If the board cannot make a determination on your request within 30 working days of receipt, NARA informs you of the reason for the delay. If the board determines that a document should remain closed, you may not file a new appeal for two years. Similarly, you may not file an appeal on documents in collections that have been open for research for less than 2 years.

(c) In some cases, the donor or his representative may reserve the right to determine whether the donor's materials, a series, or a document or portions of it should remain closed; you cannot appeal such decisions.

(d) For information on filing appeals for requests made under mandatory review of White House originated information, see § 1260.62 of this chapter.

Subpart D—General Restrictions

§ 1256.40 What are general restrictions?

General restrictions apply to certain kinds of information or classes of records, regardless of the record group to which the records have been allocated. These general restrictions may apply to records and materials not covered by the Freedom of Information Act. The general restrictions are listed and explained in §§ 1256.46 through 1256.62.

§ 1256.42 Who imposes general restrictions?

The Archivist of the United States imposes all general restrictions in accordance with 5 U.S.C. 552, as amended, and 44 U.S.C. 2107(4), 2108, and 2111.

§ 1256.44 Does NARA ever waive general restrictions?

NARA may provide access to records withheld under a general restriction only to:

(a) NARA employees for work purposes;

(b) The creating agency or its authorized agent in the conduct of agency business;

(c) The donor, in the case of donated historical materials; or

(d) The subject of the records in some cases or the subject's authorized agent.

§ 1256.46 National security-classified information.

In accordance with 5 U.S.C. 552(b)(1), NARA cannot disclose records containing information regarding national defense or foreign policy that is properly classified under the provisions of the pertinent Executive Order on Classified National Security Information and its implementing directive (Executive Order 12958, as amended).

§ 1256.48 Information about internal agency rules and practices.

(a) NARA may withhold from disclosure, in accordance with 5 U.S.C. 552(b)(2), the following:

(1) Records that contain information on substantial internal matters of agencies that, if disclosed, could risk circumvention of a legal requirement,

such as a statute or an agency regulation.

(2) Records containing information that states or assesses an agency's vulnerability to outside interference or harm. NARA withholds records that identify agency programs, systems, or facilities deemed most sensitive. NARA also withholds records describing specific measures that can be used to counteract such agency vulnerabilities.

(b) The Archivist of the United States may determine that this general restriction does not apply to specific records because enough time has passed that agency statutes or regulations would not be compromised and programs, systems, and facilities would not be harmed.

§ 1256.50 Information exempted from disclosure by statute.

In accordance with 5 U.S.C. 552(b)(3), NARA withholds records containing information that is specifically exempted from disclosure by statute when that statute:

(a) Requires withholding information from the public, leaving no discretion; or

(b) Establishes particular criteria for withholding or refers to particular types of matters to be withheld.

§ 1256.52 Trade secrets and commercial or financial information.

In accordance with 5 U.S.C. 552(b)(4), NARA may withhold records that contain trade secrets and commercial or financial information, obtained from a person, that is privileged or confidential. Such records may be disclosed only if:

(a) The person who provided the information agrees to its release; or

(b) In the judgment of the Archivist of the United States, enough time has passed that release of the information would not result in substantial competitive harm to the submitter of the information. See 36 CFR 1250.82 for additional regulatory guidance.

§ 1256.54 Inter- and intra-agency memoranda (subject to privilege).

(a) In accordance with 5 U.S.C. 552(b)(5), NARA may withhold information found in inter-agency or intra-agency records if that information is subject to a legally recognized privilege, including the:

(1) Deliberative process privilege;

(2) Attorney work product privilege; and

(3) Attorney-client privilege.

(b) The Archivist of the United States may determine that this general restriction does not apply to specific records because enough time has passed that release of the information would not result in the harm that the privilege was intended to protect or confidential attorney-client communications.

§ 1256.56 Information that would invade the privacy of a living individual.

(a) In accordance with 5 U.S.C. 552(b)(6), NARA will withhold records in personnel and medical and similar files containing information about a living individual that reveals details of a highly personal nature that, if released, would cause a clearly unwarranted invasion of personal privacy. Privacy information may include, but is not limited to, information about the physical or mental health or the medical or psychiatric care or treatment of the individual, and that:

(1) Contains personal information not known to have been previously made public, and

(2) Relates to events less than 75 years old.

(b) The Archivist of the United States may determine that this general restriction does not apply to:

(1) Specific records because enough time has passed that the privacy of living individuals is not compromised; or

(2) Researchers for the purpose of biomedical and social science research when such researchers have provided NARA with adequate written assurance that the record(s) will be used solely as a research or reporting record and that no individually identifiable information will be disclosed.

§ 1256.58 Information related to law enforcement investigations.

(a) In accordance with 5 U.S.C. 552(b)(7), NARA will withhold records compiled for law enforcement purposes. Unless otherwise determined by the Archivist in accordance with paragraph

(b) of this section, records compiled for law enforcement purposes may be disclosed only if all of the following conditions are met:

(1) The release of the information does not interfere with law enforcement proceedings;

(2) The release of the information would not deprive a person of a right to a fair trial or an impartial adjudication;

(3) The release of the information would not constitute an unwarranted invasion of personal privacy;

(4) Confidential sources and information provided by a confidential source are not revealed;

(5) Confidential investigation techniques are not described; and

(6) Release of the information would not endanger the life or physical safety of any person.

(b) The Archivist of the United States may determine that this general restriction does not apply to specific records because enough time has passed that:

(1) The safety of persons is not endangered, and

(2) The public interest in disclosure outweighs the continued need for confidentiality.

§ 1256.60 Information relating to financial institutions.

(a) In accordance with 5 U.S.C. 552(b)(8), NARA may withhold information in records contained in or relating to the examination, operating, or condition reports prepared by, on behalf of, or for the use of an agency responsible for the regulation or supervision of financial institutions.

(b) The Archivist of the United States may determine that this general restriction does not apply to specific records because enough time has passed that current financial information is not compromised.

§ 1256.62 Geological and geophysical information relating to wells.

(a) In accordance with 5 U.S.C. 552(b)(9), NARA may withhold information in records that relates to geological and geophysical information and data, including maps, concerning wells.

(b) The Archivist of the United States may determine that this general restriction does not apply to specific records because enough time has passed that current proprietary rights are not compromised.

Subpart E—Access to Materials Containing National Security-Classified Information

§ 1256.70 What controls access to national security-classified information?

(a) The declassification of and public access to national security-classified information, hereinafter referred to as ''classified information'' is governed by Executive Order 12958 of April 17, 1995 (3 CFR, 1995 Comp., p. 333) and as amended by Executive Order 13292 of March 25, 2003 (68 FR 15315, 3 CFR, 2003 Comp. 196), 32 CFR part 2001, and the Freedom of Information Act (5 U.S.C. 552, as amended).

(b) Public access to documents declassified in accordance with this regulation may be restricted or denied for other reasons under the provisions of 5 U.S.C. 552(b) for accessioned agency records; §§ 1256.30 through 1256.36 of this part for donated historical materials; 44 U.S.C. 2111, 44 U.S.C. 2201 *et seq.*, and 36 CFR part 1270 for Presidential records; and 44 U.S.C. 2111 note and 36 CFR part 1275 for Nixon Presidential materials.

§ 1256.72 What are FOIA requests and mandatory review requests?

(a) You may file a FOIA request for Executive Branch agency records, regardless of whether they contain classified information. The FOIA also applies to Presidential records as cited in § 1256.74(b). The FOIA does not apply to records of the Judicial and Legislative Branches or to donated historical materials.

(b) You may only file a mandatory review request if the records contain classified information. NARA handles mandatory review requests for records we hold for the Executive, Judicial, and Legislative Branches as well as donated historical materials under E.O. 12958, as amended, section 3.5.

§ 1256.74 How does NARA process Freedom of Information Act (FOIA) requests for classified information?

(a) NARA processes FOIA requests for access to classified information in Federal records in accordance with the provisions of 36 CFR part 1250. Time limits for responses to FOIA requests for classified information are those provided in the FOIA, rather than the longer time limits provided for responses to mandatory review requests specified by Executive Order 12958, Classified National Security Information (3 CFR, 1995 Comp., p. 333), as amended by Executive Order 13292 (68 FR 15315, 3 CFR, 2003 Comp., p. 196).

(b) NARA processes requests for access to classified information in Presidential records under the FOIA and the Presidential Records Act (PRA) in accordance with the provisions of part 1270 of this chapter. Time limits for responses to FOIA requests for classified information are those provided in the FOIA, the PRA, and Executive Order 13233, Further Implementation of the Presidential Records Act (3 CFR, 2001 Comp., p. 815).

§ 1256.76 How do I request mandatory review of classified information under Executive Order 12958, as amended?

(a) You may request mandatory review of classified information that is in the legal custody of NARA, as well as in legislative and judicial records NARA holds. Your mandatory review request must describe the document or material containing the information with sufficient specificity to enable NARA to locate it with a reasonable amount of effort. When possible, a request must include the name of the originator and recipient of the information, as well as its date, subject, and file designation. Information we reviewed within the previous 2 years is not subject to mandatory review. We notify you if this provision applies to your request.

(b) You must address your mandatory review request to the appropriate staff in the following table.

If the documents are . . .	. . . then address your request to
(1) Presidential records and donated historical materials at a Presidential library.	The appropriate library cited in 36 CFR part 1253.
(2) Nixon Presidential materials.	Director, Nixon Presidential Materials Staff (NLNS), 8601 Adelphi Road, College Park, MD 20740–6001.
(3) Presidential materials maintained in the Washington, DC, area.	Director, Presidential Materials Staff (NLMS), 700 Pennsylvania Avenue, NW., Washington, DC 20408.
(4) Federal records, donated historical materials related to Federal records, judicial records, legislative records maintained in the Washington, DC, area.	Chief, Special Access/FOIA Staff (NWCTF), 8601 Adelphi Road, College Park, MD 20740–6001.
(5) Federal records and judicial records maintained at a regional archives.	The appropriate regional archives cited in 36 CFR part 1253.

§ 1256.78 How does NARA handle my mandatory review request?

(a) You may find our procedures for mandatory review and appeals of denials in part 1260 of this chapter, Declassification of National Security Information.

(1) When agencies provide declassification guidance and delegate declassification authority to the Archivist of the United States, NARA reviews for declassification and releases the requested information or those declassified portions of the request that constitute a coherent segment unless withholding is otherwise warranted under applicable law.

(2) When we do not have guidance from agencies, we coordinate the declassification review with the original classifying agency or agencies under the provisions of part 1260, subchapter D of this chapter.

(b) If we cannot identify the information you seek from the description you provide or if the volume of information you seek is so large that processing it would interfere with our capacity to serve all requesters on an equitable basis, we notify you that, unless you provide additional information or narrow the scope of your request, we cannot take further action.

§ 1256.80 How does NARA provide classified access to historical researchers and former Presidential appointees?

(a) In accordance with the requirements of section 4.4 of E.O. 12958, as amended, we may grant access to classified information to certain eligible persons. These persons are engaged in historical research projects or previously occupied policy-making positions to which they were appointed by the President. If you seek permission to examine materials under this special historical researcher/Presidential appointees access program, you must contact NARA in advance. We need at least 4 months before you wish to have access to the materials to permit time for the responsible agencies to process your request for access. If you seek access to classified Presidential records under section 4.4 of E.O. 12958, you must first qualify under special access provisions of 44 U.S.C. 2205. NARA informs you of the agencies to which you have to apply for permission to examine classified information, including classified information originated by the White House or classified information in the custody of the National Archives which was originated by a defunct agency.

(b) You may examine records under this program only after the originating or responsible agency:

(1) Determines in writing that access is consistent with the interest of national security; and

(2) Takes appropriate steps to protect classified information from unauthorized disclosure or compromise, and ensures that the information is safeguarded in a manner consistent with Executive Order 12958, as amended.

(c) The originating or responsible agency limits the access granted to former Presidential and Vice Presidential appointees to items that the person originated, reviewed, signed, or received while serving as an appointee.

(d) To protect against the possibility of unauthorized access to restricted documents, a director may issue instructions supplementing the research room rules provided in 36 CFR part 1254.

Subpart F—Domestic Distribution of United States Information Agency Audiovisual Materials in the National Archives of the United States

§ 1256.90 What does this subpart cover?

This subpart contains procedures governing the public availability of audiovisual records and other materials subject to 22 U.S.C. 1461(b) that have been transferred to the National Archives of the United States by the United States Information Agency (USIA).

§ 1256.92 What is the purpose of this subpart?

This subpart implements section 501 of the United States Information and Educational Exchange Act of 1948 (22 U.S.C. 1461), as amended by section 202 of Public Law 101–246 (104 Stat. 49, Feb. 16, 1990). This subpart also outlines procedures that permit the public to inspect and obtain copies of USIA audiovisual records and other materials in the United States that were prepared for dissemination abroad and that have been transferred to NARA for preservation and domestic distribution.

§ 1256.94 Definition.

For the purposes of this subpart, ''Audiovisual records'' mean motion picture films, videotapes, and sound recordings, and other materials regardless of physical form or characteristics that were prepared for dissemination abroad.

§ 1256.96 What provisions apply to the transfer of USIA audiovisual records to the National Archives of the United States?

The provisions of 44 U.S.C. 2107 and 36 CFR part 1228 apply to the transfer of USIA audiovisual records to NARA, and to their deposit with the National Archives of the United States. At the time the audiovisual records are transferred to NARA, the Director of USIA, in accordance with § 1228.266(e) of this chapter, will also transfer any production or title files bearing on the ownership of rights in the productions in connection with USIA's official overseas programming.

§ 1256.98 Can I get access to and obtain copies of USIA audiovisual records transferred to the National Archives of the United States?

NARA provides access to USIA audiovisual records after the appropriate time period of restriction has passed.

(a) No USIA audiovisual records in the National Archives of the United States that were prepared for dissemination abroad are available for copying until at least 12 years after USIA first disseminated these materials abroad, or, in the case of materials prepared for foreign dissemination but not disseminated abroad, until at least 12 years after the preparation of the materials.

(b) If the appropriate time has passed, you may have access to USIA audiovisual records that do not have copyright protection and do not contain copyright material. USIA audiovisual records prepared for dissemination abroad that NARA determines do not have copyright protection nor contain copyrighted material are available for examination and copying as described in the regulations in parts 1252, 1253, 1254, 1256, and 1258 of this chapter. To determine whether materials have copyright protection or contain copyrighted material, NARA relies on information contained within or fastened to individual records (for example, copyright notices); information contained within relevant USIA production, title, or other files that USIA transferred to NARA; information provided by requesters under § 1256.100(b) (for example, evidence from the Copyright Office that copyright has lapsed or expired); and information provided by copyright or license holders.

§ 1256.100 What is the copying policy for USIA audiovisual records that either have copyright protection or contain copyrighted material?

If the appropriate time has passed, as stated in § 1256.98(a), USIA audiovisual records that either have copyright protection or contain copyrighted material may be copied as follows:

(a) USIA audiovisual records prepared for dissemination abroad that NARA determines may have copyright protection or may contain copyrighted material are made available for examination in NARA research facilities as described in the regulations in this title.

(b) Copies of USIA audiovisual records prepared for dissemination abroad that NARA determines may have copyright protection or may contain copyrighted material are provided to you if you seek the release of such materials in the United States once NARA has:

(1) Ensured, as described in paragraph (c) of this section, that you have secured and paid for necessary United States rights and licenses;

(2) Been provided with evidence from the Copyright Office demonstrating that copyright protection in the materials sought, or relevant portions in the materials, has lapsed or expired; or

(3) Received your signed certification in accordance with paragraph (d) of this section that you will use the materials sought only for purposes permitted by the Copyright Act of 1976, as amended, including the fair use provisions of 17 U.S.C. 107. No copies of USIA audiovisual records will be provided until the fees authorized under part 1258 of this chapter have been paid.

(c) If NARA determines that a USIA audiovisual record prepared for dissemination abroad may have copyright protection or may contain copyrighted material, you may obtain copies of the material by submitting to NARA written evidence from all copyright and license owner(s) that any necessary fees have been paid or waived and any necessary licenses have been secured.

(d) If NARA has determined that a USIA audiovisual record prepared for dissemination abroad may have copyright protection or may contain copyrighted material, persons seeking the release of such material in the United States may obtain copies of the material by submitting to NARA the following certification statement:

> I, (printed name of individual), certify that my use of the copyrighted portions of the (name or title and NARA identifier of work involved) provided to me by the National Archives and Records Administration (NARA), will be limited to private study, scholarship, or research purposes, or for other purposes permitted by the Copyright Act of 1976, as amended. I understand that I am solely responsible for the subsequent use of the copyrighted portions of the work identified above.

(e) In every instance where NARA provides a copy of an audiovisual record under this subpart, and NARA has determined that the work reproduced may have copyright protection or may contain copyrighted material, NARA must provide you with a warning notice of copyright.

(f) Nothing in this section limits NARA's ability to make copies of USIA audiovisual records for preservation, arrangement, repair and rehabilitation, description, exhibition, security, or reference purposes.

§ 1256.102 What fees does NARA charge?

Copies of audiovisual records will only be provided under this subpart upon payment of fees in accordance with 44 U.S.C. 2116(c) and 22 U.S.C. 1461(b)(3). *See* § 1258.4(b) for additional information.

PART 1258—FEES

Sec.
1258.1 [Reserved]
1253.2 What definitions apply to the regulations in this part?
1258.4 What costs make up the NARA fees?
1258.6 How does NARA calculate fees for individual products?
1258.8 How does NARA change fees for existing records reproductions?
1258.10 How does NARA develop and publicize new records reproduction fees?
1258.12 When does NARA provide records reproductions without charge?
1258.16 What is NARA's refund policy?
1258.18 Where can I find NARA's current fees and information on how to order reproductions?

AUTHORITY: 44 U.S.C. 2116(c) and 44 U.S.C. 2307.

SOURCE: 76 FR 62632, October 11, 2011, unless otherwise noted.

§ 1258.1 [Reserved]

§ 1258.2 What definitions apply to the regulations in this part?

Accession means the method of acquiring archival records or donated materials from various Governmental bodies.

Archival records means records that have been accessioned into the legal custody of NARA, donated historical materials in the legal custody of NARA and its Presidential libraries, and Congressional, Supreme Court, and other historical materials in NARA's physical custody and for which NARA has a formal agreement for their permanent retention.

Certification means affixing a seal to copies certifying the copies are a valid reproduction of a file; this service is available for an additional fee.

Cost means the total amount of money spent by the NATF for providing services including, but not limited to, salaries; benefits; rent; communication and utilities; printing and reproductions; consulting and other services; payments to other agencies/funds; supplies and materials; depreciation; system upgrades/replacements; *etc.*

Custodial units mean NARA's Federal Records Centers, National Personnel Records Center, archival reference operations nationwide, and Presidential Libraries.

Fee means the price researchers pay for reproductions of records. Certification of records is also a reproduction fee.

Records center records means Federal records in the physical custody of NARA records centers, but still in the legal custody of the agencies that created and maintained them.

§ 1258.4 What costs make up the NARA fees?

(a) 44 U.S.C. 2116(c) allows the NATF to recover all of its costs for providing records reproduction services to the public. The vast majority of materials that are reproduced are from the holdings of NARA, which require special handling, due to the age, condition and historical significance. Examples of special handling include the following:

(1) *The placement of each record by hand on the reproduction equipment.* Many of the records are fragile and have historical uniqueness; reproduction equipment operators must take great care in handling these records. For example, each page of a document must be carefully placed by hand on the reproduction equipment, a copy made, the page removed, and the process re-started.

(2) *Clarity and legibility of the reproduced records.* Older records may be handwritten and darkened from age, which requires extra time to make sure

we produce copies that are as clear and legible as possible.

(3) *Inability to use automatic document feeders.* Because of the requirements in paragraph (a)(1) of this section, automatic document feeders cannot be used for the duplication of paper materials. This adds time and cost to the price of copying these irreplaceable documents.

(b) The NATF costs, at a minimum, include:

(1) Salaries and benefits of the NATF staff involved in all aspects of the records reproduction process (includes, but is not limited to, compensation for full- and part-time employees, temporary appointments, overtime, awards, Civil Service Retirement Service and Federal Employees' Retirement System contributions, health benefits, life insurance benefits and Thrift Savings Plan contributions).

(2) Travel and transportation (includes, but is not limited to, travel and transportation of persons, transportation of things, and contract mail service).

(3) Rent, communications and utilities (includes, but is not limited to, telecommunications, equipment rental, and postage).

(4) Printing and reproductions (includes, but is not limited to, commercial printing, advertising, and printing of forms).

(5) Consulting and other services (includes, but is not limited to, management and professional services, contract labor, work performed in support of reproduction orders, and maintenance of equipment).

(6) Payments to other agencies/funds (includes, but is not limited to, reimbursements and payments to other agencies and other funds within NARA). Specifically, the NATF ''hires'' the NARA custodial units to do reproduction work. In return, the NATF reimburses the custodial units for the cost of salaries and benefits.

(7) Supplies and materials (includes, but is not limited to, general supplies, and materials and parts).

(8) Depreciation (spreading the cost of an asset over the span of several years).

(9) System upgrades/replacement (includes, but is not limited to, installation of operating equipment, software upgrades, and system changes).

§ 1258.6 How does NARA calculate fees for individual products?

NARA calculates the fees for individual products using the following:

(a) *Cost summary.* A summary of all costs incurred by the NATF in providing records reproduction services.

(b) *Percent of revenue.* The percentage of the total NATF revenue represented by sales of a product. This is determined and used where a more accurate percentage based upon actual usage is not available. To calculate this percentage, an analysis is made to determine the current percent of NATF sales revenue represented by each product line. The sales volume is then reviewed with the custodial units to determine if this represents anticipated sales.

(c) *Actual cost percent calculation.* Using the information calculated in the Cost Summary, the actual revenue cost percentage is determined. In some cases, the actual percentage of cost can be calculated from available data or known constraints of the product line. For example, if the contractor responsible for providing copy support does not support the reproduction of a given product line then zero (0) percent of the contractor's costs would be allocated to that product line.

(d) *Forecasted volume.* The prediction of a product's sales volume in future year(s). These estimates are made by working with the custodial units and taking into account historical sales volume. An annual percent change is then estimated

(e) *Reimbursements to the custodial units.* The amount paid to the custodial units for records reproductive services in support of NATF customer orders. The NATF reimburses the custodial units for services rendered to the NATF for the reproduction of NARA holdings. To determine the reimbursement per copy for an item, past reimbursement fees are changed by the compounded annual Government salary changes as issued by the Office of Personnel Management for the fiscal years being projected. The new rates are reviewed with custodial unit personnel and adjustments are made as required.

(f) *Additional cost allocation*. The costs unique to a given product line. Each product line is evaluated to determine the costs that are unique to that product line, such as purchase and installation costs of specialty equipment, replacement costs for aging equipment, copier leases and maintenance costs, etc. These costs are then allocated against those product lines that use the equipment. Where costs cross product lines, the allocations are apportioned based upon the percent of the estimated copy volume for each product line.

(g) *Fee calculation*. The product fee is calculated by the following formula: {[(Percent of Revenue * NATF Overhead Costs) + Reimbursement + Additional Costs]/Projected Sales Volume}

This calculation is completed for each product.

(h) *Final review*. After the suggested new fees are calculated, NATF reviews them to establish the final fees. Fees may be adjusted across product lines to ensure that the NATF can succeed in total cost recovery.

§ 1258.8 How does NARA change fees for existing records reproductions?

(a) The NATF conducts periodic reviews of its fees to ensure that the costs of providing services to the public are properly recovered.

(b) Existing records reproduction fees may be adjusted annually based on the following factors:

(1) Inflation.

(2) The Office of Personnel Management (OPM) salary changes.

(3) Reallocation of shared costs across product lines using the methodology described in § 1258.6.

(4) The projected sales volume for the product.

(5) The actual sales volume for the product.

(6) The approval of the Archivist of the United States.

(d) NARA will place a notice on our Web site (*http://www.archives.gov*) annually when announcing that records reproduction fees will be adjusted in accordance with this regulation.

§ 1258.10 How does NARA develop and publicize new records reproduction fees?

(a) Custodial units prepare a justification proposal for a proposed records reproduction service and send the justification to the custodial unit office head, through appropriate channels, for concurrence and forwarding to NATF. The justification proposal includes, at a minimum, the following information:

(1) Estimated monthly volume of product orders based on available historical data;

(2) Identification of the equipment and supplies required to provide the product and service;

(3) Brief description of the process required to provide the product and service, including the amount of time for each number and grade level of staff.

(4) Identification of any services or products that will be replaced by the proposed products and services;

(5) Identification of other NARA units that may have a demand for the proposed services; and

(6) Any other relevant information.

(b) After receiving the proposal, NATF staff:

(1) Assesses the potential customer base for the proposed products and services, consulting other NARA offices.

(2) If the potential demand does not warrant establishing fees for new records reproduction products and services, NATF notifies the proposing office that the new product and service are not approved and the reasons why.

(3) If the potential demand warrants, NATF prepares a cost analysis following the methodology in § 1258.6 and develops a proposed recommended fee for review by NARA's Financial Resources Division and approval by the Archivist of the United States.

(c) *Notification of new records reproduction services and trial periods:* (1) The public will be notified of new records reproduction services, including the business case for determining initial fee, on-line at *http://www.archives.gov*, by press releases, and through NARA's social media outlets.

(2) New records reproduction services fees have an initial trial period of one year. During this time, the public is

encouraged to provide feedback to NARA about the new records reproduction services and their fees as directed in the notification of the new services.

(3) Prior to the expiration of a trial period, NATF will assess the validity of the fees for the new records reproduction products and services, and make one of three determinations:

(i) Retain products, services and fees;

(ii) Retain products or services but adjust fees up or down; or

(iii) Discontinue products or services.

(d) The public will be notified of NATF determination, including business case for determination, in NARA research rooms nationwide, on-line at *http://www.archives.gov*, press releases, and through NARA's social media outlets.

§ 1258.12 When does NARA provide records reproductions without charge?

At the discretion of the Secretary of the NATF, customers are not charged a fee for records reproductions or certifications in the instances described in this section.

(a) When NARA furnishes copies of records to other elements of the Federal Government. However, a fee may be charged if the appropriate director determines that the service cannot be performed without reimbursement;

(b) When NARA wishes to disseminate information about its activities to the general public through press, radio, television, and newsreel representatives;

(c) When the reproduction is to furnish the donor of a document or other gift with a copy of the original;

(d) When the reproduction is for individuals or associations having official voluntary or cooperative relations with NARA in its work;

(e) When the reproduction is for a foreign, State, or local government or an international agency and furnishing it without charge is an appropriate courtesy; and

(f) For records of other Federal agencies in NARA Federal records centers only:

(1) When furnishing the service free conforms to generally established business custom, such as furnishing personal reference data to prospective employers of former Government employees;

(2) When the reproduction of not more than one copy of the document is required to obtain from the Government financial benefits to which the requesting person may be entitled (*e.g.*, veterans or their dependents, employees with workmen's compensation claims, or persons insured by the Government);

(3) When the reproduction of not more than one copy of a hearing or other formal proceeding involving security requirements for Federal employment is requested by a person directly concerned in the hearing or proceeding; and

(4) When the reproduction of not more than one copy of a document is for a person who has been required to furnish a personal document to the Government (*e.g.*, a birth certificate required to be given to an agency where the original cannot be returned to the individual).

§ 1258.16 What is NARA's refund policy?

Due to the age, original media type, and general condition of many of the items in NARA's holdings, it is occasionally difficult to make a legible reproduction. NARA staff will notify customers if they anticipate that the original will result in a reproduction of questionable legibility before requesting the reproduction and after approval of the customer. After a records reproduction is completed, the product undergoes a review to determine if it is an accurate representation of the original item. Because of the preapproval process, NARA does not provide refunds except in special cases. If a customer requests a refund, a review is made of the order to determine if the customer was properly notified of the questionable nature of the original and if the product is a true representation of the original. If the customer authorized proceeding and the product is a true representation of the original, no refund will be issued.

§ 1258.18 Where can I find NARA's current fees and information on how to order reproductions?

(a) NARA's fee schedule, methods of payment, and ordering portal are located at *http://www.archives.gov*.

(b) Fee schedules for reproductions made from the holdings of Presidential libraries may differ because of regional cost variations. Presidential library fee schedules are available at *http://www.archives.gov/presidential-libraries/*. Some services may not be available at all NARA facilities.

(c) In order to preserve certain records which are in poor physical condition, NARA may restrict customers to photographic or other kinds of duplication instead of electrostatic copies.

[76 FR 62632, October 11, 2011, as amended at 78 FR 59825, Sept. 30, 2013]

SUBCHAPTER D—DECLASSIFICATION

PART 1260—DECLASSIFICATION OF NATIONAL SECURITY INFORMATION

Subpart A—General Information

Sec.
1260.1 What is the purpose of this part?
1260.2 What definitions apply to the regulations in this part?
1260.4 What NARA holdings are covered by this part?

Subpart B—Responsibilities

1260.20 Who is responsible for the declassification of classified national security Executive Branch information that has been accessioned by NARA?
1260.22 Who is responsible for the declassification of classified national security White House originated information in NARA's holdings?
1260.24 Who is responsible for declassification of foreign government information in NARA's holdings?
1260.26 Who is responsible for issuing special procedures for declassification of records pertaining to intelligence activities and intelligence sources or methods, or of classified cryptologic records in NARA's holdings?
1260.28 Who is responsible for declassifying Restricted Data, Formerly Restricted Data, and Transclassified Foreign Nuclear Information?

Subpart C—The National Declassification Center (NDC)

1260.30 What is the NDC?
1260.32 How is the NDC administered?
1260.34 What are the responsibilities of the NDC?
1260.36 What are agency responsibilities with the NDC?
1260.38 How does the NDC ensure the quality of declassification reviews?
1260.40 What types of referrals will the NDC process?
1260.42 How does the NDC process referrals of Federal Records?
1260.44 How does the NDC process RAC Project referrals?
1260.46 How does the Department of Defense process referrals?

Subpart D—Automatic Declassification

1260.50 How are records at NARA reviewed as part of the automatic declassification process?
1260.52 What are the procedures when agency personnel review records in NARA's legal and physical custody?
1260.54 Will NARA loan accessioned records back to the agencies to conduct declassification review?
1260.56 What are NARA considerations when implementing automatic declassification?

Subpart E—Systematic Declassification

1260.60 How does the NDC facilitate systematic review of records exempted at the individual record or file series level?

Subpart F—Mandatory Declassification Review (MDR)

1260.70 How does a researcher submit an MDR request?
1260.72 What procedures does NARA follow when it receives a request for Executive Branch records under MDR?
1260.74 What are agency responsibilities after receiving an MDR request forwarded by NARA?
1260.76 What are NARA's procedures after it has received the agency's declassification determinations?
1260.78 What is the appeal process when an MDR request for Executive Branch information in NARA's legal custody is denied in whole or in part?

Subpart G—Reclassification of Records Transferred to NARA

1260.80 What actions must NARA take when information in its physical and legal custody is reclassified after declassification under proper authority?
1260.82 What actions must NARA take with information in its physical and legal custody that has been made available to the public after declassification without proper authority?

AUTHORITY: 44 U.S.C. 2101 to 2118; 5 U.S.C. 552; E.O. 13526, 75 FR 707, 3 CFR, 2009 Comp., p. 298; Presidential Memorandum of December 29, 2009 ''Implementation of the Executive Order, Classified National Security Information,'' 75 FR 733, 3 CFR, 2009 Comp., p. 412; 32 CFR Part 2001.

SOURCE: 76 FR 81828, Dec. 29, 2011, unless otherwise noted.

Subpart A—General Information

§ 1260.1 What is the purpose of this part?

(a) This subchapter defines the responsibilities of NARA and other Federal agencies for declassification of classified national security information in the holdings of NARA. This part also describes NARA's procedures for:

(1) Operation of the National Declassification Center,

(2) Processing referrals to other agencies,

(3) Facilitating systematic reviews of NARA holdings, and

(4) Processing mandatory declassification review requests for NARA holdings.

(b) Regulations for researchers who wish to request access to materials containing classified national security information are found in 36 CFR part 1256.

(c) For the convenience of the user, the following table provides references between the sections contained in this part and the relevant sections of the Order and the Implementing Directive.

CFR section	Related section of E.O. 13526	Related section of Implementing Directive
1260.20 Who is responsible for the declassification of classified national security Executive Branch information that has been accessioned by NARA?.	3.3, 3.3(d)(3), 3.6	
1260.22 Who is responsible for the declassification of classified national security White House originated information in NARA's holdings?.	3.3(d)(3), 3.6	
1260.24 Who is responsible for declassification of foreign government information in NARA's holdings?.	6.1(s)	
1260.28 Who is responsible for declassifying Restricted Data (as defined by the Atomic Energy Act of 1954, as amended), Formerly Restricted Data (as defined in 10 CFR 1045.3, and Transclassified Foreign Nuclear Information (as defined in 32 CFR 2001.24(i))?.		2001.24(i)
1260.34 What are the responsibilities of the NDC?	3.3, 3.3(d)(3), 3.4	
1260.36 What are agency responsibilities with the NDC?	3.3(d)(3)	
1260.40 What types of referrals will the NDC process?	3.3	
1260.42 How does the NDC process referrals of Federal Records?	3.3(d)(3)(B)	
1260.46 How does the Department of Defense process referrals?	3.3	
1260.50 How are records at NARA reviewed as part of the automatic declassification process?.	3.3	
1260.52 What are the procedures when agency personnel review records in NARA's legal and physical custody?.	3.3	2001.30(p)
1260.56 What are NARA considerations when implementing automatic declassification?.	3.3	
1260.72 What procedures does NARA follow when it receives a request for Executive Branch records under MDR?.	3.6(a), 3.6(b)	2001.33
1260.74 What are agency responsibilities after receiving an MDR request forwarded by NARA?.	3.5(c)	
1260.76 What are NARA's procedures after it has received the agency's declassification determinations?.		Appendix A
1260.78 What is the appeal process when an MDR request for Executive Branch information in NARA's legal custody is denied in whole or in part?.	3.3	2001.30(p), 2001.33
1260.80 What actions must NARA take when information in its physical and legal custody is reclassified after declassification under proper authority?.		2001.13
1260.82 What actions must NARA take with information in its physical and legal custody that has been made available to the public after declassification without proper authority?.	emsp;	2001.13

§ 1260.2 What definitions apply to the regulations in this part?

Classified national security information, or *classified information*, means information that has been determined under Executive Order 13526 or any predecessor order to require protection against unauthorized disclosure and is marked to indicate its classified status when in documentary form.

Declassification means the authorized change in the status of information from classified information to unclassified information.

Equity refers to information:

(1) Originally classified by or under the control of an agency;

(2) In the possession of the receiving agency in the event of transfer of function; or

(3) In the possession of a successor agency for an agency that has ceased to exist.

File series means file units or documents arranged according to a filing system or kept together because they relate to a particular subject or function, result from the same activity, document a specific kind of transaction, take a particular physical form, or have some other relationship arising out of their creation, receipt, or use, such as restrictions on access or use.

Integral file block means a distinct component of a file series, as defined in this section, that should be maintained as a separate unit in order to ensure the integrity of the records. An integral file block may consist of a set of records covering either a specific topic or a range of time such as presidential administration or a 5-year retirement schedule within a specific file series that is retired from active use as a group. For purposes of automatic declassification, integral file blocks shall contain only records dated within 10 years of the oldest record in the file block.

Mandatory declassification review means the review for declassification of classified information in response to a request for declassification that meets the requirements under section 3.5 of Executive Order 13526.

Records means the records of an agency and Presidential materials or Presidential records, as those terms are defined in title 44, United States Code, including those created or maintained by a government contractor, licensee, certificate holder, or grantee that are subject to the sponsoring agency's control under the terms of the contract, license, certificate, or grant.

Referral means that information in an agency's records that was originated by or is of interest to another agency is sent to that agency for a determination of its classification status.

Systematic declassification review means the review for declassification of classified information, including previously exempted information, contained in records that have been determined by the Archivist of the United States to have permanent historical value in accordance with 44 U.S.C. 2107.

§ 1260.4 What NARA holdings are covered by this part?

The NARA holdings covered by this part are records legally transferred to NARA, including Federal records, 44 U.S.C. 2107; Presidential records, 44 U.S.C. 2201–2207; Nixon Presidential materials, 44 U.S.C. 2111 note; and donated historical materials, 44 U.S.C. 2111.

Subpart B—Responsibilities

§ 1260.20 Who is responsible for the declassification of classified national security Executive Branch information that has been accessioned by NARA?

(a) Consistent with the requirements of section 3.3 of the Order on automatic declassification, the originating agency is responsible for declassification of its information and identifying equity holders.

(b) An agency may delegate declassification authority to NARA.

(c) If an agency does not delegate declassification authority to NARA, the agency is responsible for reviewing the records to identify the equities of other agencies before the date that the records become eligible for automatic declassification.

(d) NARA is responsible for the declassification of records in its legal custody of defunct agencies that have no successor. NARA will consult with agencies having an equity in the records before making declassification determinations in accordance with sections 3.3(d)(3) and 3.6 of the Order.

§ 1260.22 Who is responsible for the declassification of classified national security White House originated information in NARA's holdings?

(a) NARA is responsible for declassification of information from a previous administration that was originated by:

(1) The President and Vice President;

(2) The White House staff;

(3) Committees, commissions, or boards appointed by the President; or,

(4) Others specifically providing advice and counsel to the President or acting on behalf of the President.

(b) NARA will consult with agencies having equity in the records before making declassification determinations in accordance with sections 3.3(d)(3) and 3.6 of Executive Order 13526.

§ 1260.24 Who is responsible for declassification of foreign government information in NARA's holdings?

(a) The agency that received or classified the information is responsible for its declassification.

(b) In the case of a defunct agency, NARA is responsible for declassification of foreign government information, as defined in section 6.1(s) of the Order, in its holdings and will consult with the agencies having equity in the records before making declassification determinations.

§ 1260.26 Who is responsible for issuing special procedures for declassification of records pertaining to intelligence activities and intelligence sources or methods, or of classified cryptologic records in NARA's holdings?

(a) The Director of National Intelligence is responsible for issuing special procedures for declassification of classified records pertaining to intelligence activities and intelligence sources and methods.

(b) The Secretary of Defense is responsible for issuing special procedures for declassification of classified cryptologic records.

§ 1260.28 Who is responsible for declassifying Restricted Data, Formerly Restricted Data, and Transclassified Foreign Nuclear Information?

(a) Only designated officials within the Department of Energy (DOE) may declassify Restricted Data (RD) *(as defined by the Atomic Energy Act of 1954, as amended)*. The declassification of Formerly Restricted Data (FRD) *(as defined in 10 CFR 1045.3)* may only be performed after designated officials within DOE, in conjunction with designated officials within DOD, have determined that the FRD marking may be removed. Declassification of Transclassified Foreign Nuclear Information (TFNI) *(as defined in 32 CFR 2001.24(i))* may be performed only by designated officials within DOE.

(b) Any record that contains RD, FRD, or TFNI shall be excluded from automatic declassification and referred by the primary reviewing agency to DOE using a completed SF 715 to communicate both the referral action and the actions taken on the equities of the primary reviewing agency. Any record identified by the primary reviewing agency as potentially containing RD, FRD, or TFNI shall be referred to DOE using a completed SF 715.

Subpart C—The National Declassification Center (NDC)

§ 1260.30 What is the NDC?

The National Declassification Center (NDC) is established within NARA to streamline declassification processes, facilitate quality-assurance measures, and implement standardized training for declassification of records determined to have permanent historical value.

§ 1260.32 How is the NDC administered?

(a) The NDC is administered by a Director, who shall be appointed by the Archivist of the United States, in consultation with the Secretaries of State, Defense, Energy, and Homeland Security, the Attorney General, and the Director of National Intelligence.

(b) The Archivist, in consultation with the representatives of the participants in the NDC and after receiving comments from the general public, shall develop priorities for declassification activities under the responsibility of the NDC that are based upon researcher interest and likelihood of declassification.

§ 1260.34 What are the responsibilities of the NDC?

The NDC shall coordinate the following activities:

(a) Referrals, to include:

(1) Timely and appropriate processing of all referrals in accordance with section 3.3(d)(3) of Executive Order 13526; and

(2) The exchange among agencies of detailed declassification guidance to

enable referrals as identified in paragraph (a)(1) of this section.

(b) General interagency declassification activities as necessary to fulfill the requirements of sections 3.3 and 3.4 of the Order;

(c) The development of effective, transparent, standard declassification work processes, training, and quality assurance measures;

(d) The development of solutions to declassifying information contained in electronic records and special media; and planning for solutions for declassifying information as new technologies emerge;

(e) The documentation and publication of declassification review decisions; and support of NDC declassification responsibilities by linking and using existing agency databases; and

(f) Storage, and related services, on a reimbursable basis, for Federal records containing classified national security information.

§ 1260.36 What are agency responsibilities with the NDC?

Agency heads shall fully cooperate with the Archivist and the activities of the NDC and provide the following resources for NDC operations:

(a) Adequate and current declassification guidelines to process referrals in accordance with section 3.3(d)(3) of the Order and as indicated in § 1260.54(a); and

(b) Assignment of agency personnel to the NDC, at the request of the Archivist, with delegated authority by the agency head to review and exempt or declassify information originated by that agency found in records accessioned into the National Archives of the United States; and

(c) Coordination with the NDC of the establishment of any agency centralized facilities and internal operations to conduct declassification reviews to ensure that such agencies conduct internal declassification reviews of records of permanent historical value.

§ 1260.38 How does the NDC ensure the quality of declassification reviews?

An interagency team of experienced declassification reviewers, established by NDC, conducts a sampling of reviewed records according to a sampling regime approved by a separate interagency program management team. The interagency team will verify that each series of agency reviewed records complies with the requirements of the Special Historical Records Review Plan (Supplement) dated March 3, 2000 (DOE–NARA Plan), pursuant to the requirements of Public Law 105–261 (112 Stat. 2259) and Public Law No. 106–65 (113 Stat. 938). Record series that cannot be verified to have been reviewed in accordance with the DOE–NARA Plan will not proceed through the NDC verification process until verification is received by the NDC. The DOE will participate on the interagency team to conduct the quality control reviews required by the DOE–NARA Plan in accordance with priorities established by the NDC.

§ 1260.40 What types of referrals will the NDC process?

The NDC processes referrals of both Federal records and Presidential records. Referrals identified in accessioned Federal records will be processed by the Interagency Referral Center (IRC); referrals identified in records maintained by the Presidential Libraries will be processed by the Remote Archives Capture (RAC) Project. (The RAC Project is a collaborative program to facilitate the declassification review of classified records in the Presidential Libraries in accordance with section 3.3 of the Order. In this project, classified Presidential records at the various Presidential Libraries are scanned and brought to the Washington, DC, metropolitan area in electronic form for review by equity-holding agencies.)

§ 1260.42 How does the NDC process referrals of Federal Records?

(a) All referrals are processed through the IRC.

(b) Agencies will have one year from the time they receive formal notification of referrals by the NDC to review their equity in the records. If an agency does not complete its review within one year of formal notification, its information will be automatically declassified in accordance with section

3.3(d)(3)(B) of the Order unless the information has been properly exempted by an equity holding agency under section 3.3 of the Order.

(c) Once notified, the agencies will coordinate their review with the NDC so the NDC can properly manage the workflow of the IRC.

§ 1260.44 How does the NDC process RAC Project referrals?

(a) The Presidential Libraries use the RAC Project to process referrals.

(b) Agencies will be notified of RAC Project referrals according to an annual prioritization schedule via the NDC.

(c) The RAC Project identifies the primary agency with equity in the record.

(d) The primary agency will have up to one year from the time it is notified of their referral to complete the review of its equity and identify all other agencies (''secondary agencies'') with an interest in the record. If an agency does not complete its review in one year, its equity will be automatically declassified.

(e) Secondary agencies receiving notification of their referrals through the RAC Project will have up to one year from the date of notification to complete their review.

§ 1260.46 How does the Department of Defense process referrals?

(a) The Department of Defense (DOD) established the Joint Referral Center (JRC) to review DOD agencies' records and all DOD equities within those records for declassification in accordance with section 3.3 of the Order.

(b) The JRC shall include sufficient quality assurance review policies that are in accordance with policies at the NDC and will provide the NDC with sufficient information on the results of these reviews to facilitate non-DOD agency referral processing and final archival processing for public release.

(c) NARA may loan accessioned records to the JRC for this purpose.

Subpart D—Automatic Declassification

§ 1260.50 How are records at NARA reviewed as part of the automatic declassification process?

(a) Consistent with the requirements of section 3.3 of Executive Order 13526 on automatic declassification, NARA staff may review for declassification records for which the originating agencies have provided written authority to apply their approved declassification guides. The originating agency must review records for which this authority has not been provided.

(b) Agencies may choose to review their own records that have been transferred to NARA's legal custody, by sending personnel to the NARA facility where the records are located to conduct the declassification review.

(c) Classified materials in the Presidential Libraries may be referred to agencies holding equity in the records through the RAC Project.

§ 1260.52 What are the procedures when agency personnel review records in NARA's legal and physical custody?

(a) NARA will:

(1) Make the records available to properly cleared agency reviewers;

(2) Provide space for agency reviewers in the facility in which the records are located to the extent that space is available; and

(3) Provide training and guidance for agency reviewers on the proper handling of archival materials.

(b) Agency reviewers must:

(1) Follow NARA security regulations and abide by NARA procedures for handling archival materials;

(2) Use the Standard Form (SF) 715 and follow NARA procedures for identifying and documenting records that require exemption, referral, or exclusion in accordance with section 3.3 of the Order or 32 CFR 2001.30(p); and

(3) Obtain permission from NARA before bringing into a NARA facility computers, scanners, tape recorders, microfilm readers, and other equipment necessary to view or copy records. NARA will not allow the use of

any equipment that poses an unacceptable risk of damage to archival materials. See 36 CFR part 1254 for more information on acceptable equipment.

(4) Provide NARA with information, as requested by the Archivist and/or NDC Director, on their review so as to facilitate the processing of referrals and archival processing.

§ 1260.54 Will NARA loan accessioned records back to the agencies to conduct declassification review?

In rare cases, when agency reviewers cannot be accommodated at a NARA facility, NARA will consider a request to loan records back to an originating agency in the Washington, DC, metropolitan area for declassification review. Each request will be judged on a case-by-case basis. The requesting agency must:

(a) Ensure that the facility in which the documents will be stored and reviewed passes a NARA inspection to ensure that the facility maintains:

(1) The correct archival environment for the storage of permanent records; and

(2) The correct security conditions for the storage and handling of classified national security materials.

(b) Meet NARA requirements for ensuring the safety of the records;

(c) Abide by NARA procedures for handling of archival materials;

(d) Identify and mark documents that cannot be declassified in accordance with NARA procedures; and

(e) Obtain NARA approval for use of any equipment such as scanners, copiers, or cameras to ensure that they do not pose an unacceptable risk of damage to archival materials.

§ 1260.56 What are NARA considerations when implementing automatic declassification?

(a) *Integral File Blocks.* Classified records within an integral file block that have not been reviewed and properly exempted from declassification, or referred to an equity holder, will be automatically declassified on December 31 of the year that is 25 years from the date of the most recent record within the file block, except as specified in paragraphs (b), (c), and (d) of this section. For the purposes of automatic declassification, integral file blocks shall contain only records dated within 10 years of the oldest record in the block. The records of each Presidential Administration will be treated as an integral file block and will be scanned for declassification review through the RAC Project.

(b) *Special media records.* After consultation with the Director of the National Declassification Center and before the records are subject to automatic declassification, an agency head or senior agency official may delay automatic declassification for up to five additional years for classified information contained in media that make a review for possible declassification exemptions more difficult or costly. NARA, through the NDC, will coordinate processing of referrals made in these special media records as part of its overall prioritization strategy.

(c) *Referrals.* The IRC at the NDC will provide official notification for Federal records, while the RAC Project will provide formal notification for Presidential records. For agencies which fail to act on their referrals after formal notification by the IRC or the RAC Project, NARA will automatically declassify their information in accordance with section 3.3(d)(3)(B) of the Order.

(d) *Additional referrals.* Agencies will identify referrals in accordance with section 3.3(d)(3) of the Order. NARA will delay automatic declassification for up to 1 year for classified records that have been identified by the originating agency or by NARA as having classified information that requires referral that were not identified by the primary reviewing agency.

(e) *Other circumstances.* Information from another agency that has not been properly identified and referred is not subject to automatic declassification. When NARA identifies information, in accordance with section 3.3 of the Order, that agency will have up to 1 year from the date of formal notification to review its information for declassification.

(f) *Discovery of information inadvertently not reviewed.* When NARA identifies a file series or collection in its physical and legal custody that contains classified information over 25

years old and that was inadvertently not reviewed before the effective date of automatic declassification, NARA must report the discovery to the Information Security Oversight Office (ISOO) and to the responsible agency head or senior agency official within 90 days of discovery. ISOO, the responsible agency, and NARA will consult on a delay of up to three years to review the records.

Subpart E—Systematic Declassification

§ 1260.60 How does the NDC facilitate systematic review of records exempted at the individual record or file series level?

(a) NARA, through the NDC, follows the procedures established in § 1260.52 above regarding agency access for review of exempt file series.

(b) NARA, through the NDC, will establish a prioritization schedule for review of exempted individual Federal records. This schedule will take into account upcoming exemption expiration, researcher interest and likelihood of declassification. This schedule will be included as part of the NDC annual work plan.

(c) The Presidential Libraries will work directly with agencies to facilitate the review of records exempted at the file series level.

(d) The Presidential Libraries, through the NDC, will establish a prioritization schedule for review of previously exempted classified materials in the Presidential Library system. These materials will be referred to agencies holding equity in the records via the RAC Project.

Subpart F—Mandatory Declassification Review (MDR)

§ 1260.70 How does a researcher submit an MDR request?

(a) For Federal records in NARA's physical and legal custody, requests for MDR should be submitted to: National Archives at College Park, ANDC (Attn: MDR Staff), 8601 Adelphi Road, Room 2600, College Park MD 20740 or *specialaccess_foia@nara.gov;*

(b) For Presidential records, Nixon Presidential materials, or donated presidential materials in the custody of the Presidential Libraries, MDR requests should be submitted to the Presidential Library with physical and legal custody of the records;

(c) For Congressional records in NARA's custody, MDR requests should be submitted to: The Center for Legislative Archives, 700 Pennsylvania Ave. NW., Washington, DC 20408 or *legislative.archives@nara.gov*.

(d) For all records in NARA's physical and legal custody, MDR requests must describe the record or material with sufficient specificity to enable NARA to locate it with a reasonable amount of effort. If NARA is unable to locate the record or material, or requires additional information, NARA will inform the requester.

§ 1260.72 What procedures does NARA follow when it receives a request for Executive Branch records under MDR?

(a) NARA will review the requested records and determine if they have already been released. If not, NARA will refer copies of the records to the originating agency and to agencies that may have an interest or activity with respect to the classified information for declassification review. Agencies may also send personnel to a NARA facility where the records are located to conduct a declassification review, or may delegate declassification authority to NARA.

(b) When the records were originated by a defunct agency that has no successor agency, NARA is responsible for making the declassification determinations, but will consult with agencies having interest in or activity with respect to the classified information.

(c) If the document or information has been reviewed for declassification within the past 2 years, NARA may opt not to conduct a second review and may instead inform the requester of this fact and of the prior review decision and advise the requester of appeal rights in accordance with 32 CFR 2001.33.

(d) If NARA determines that a requester has submitted a request for the same information under both MDR and the Freedom of Information Act (FOIA), as amended, NARA will notify

the requester that he/she is required to elect one process or the other. If the requester fails to elect one or the other, the request will be treated under the FOIA, unless the requested information or materials are subject only to mandatory review.

(e) In every case, NARA will acknowledge receipt of the request and inform the requester of the action taken. If additional time is necessary to make a declassification determination on material for which NARA has delegated authority, NARA will tell the requester how long it will take to process the request and advise the requester of available appeal rights. NARA may also inform the requester if part or all of the requested information is referred to other agencies for declassification review in accordance with section 3.6(a) and (b) of the Executive Order.

(f) If NARA fails to provide the requester with a final decision on the mandatory review request within one year of the original date of the request, the requester may appeal to the Interagency Security Classification Appeals Panel (ISCAP).

§ 1260.74 What are agency responsibilities after receiving an MDR request forwarded by NARA?

(a) The agency receiving the referral will promptly process and review the referral for declassification and public release on a line-by-line basis in accordance with section 3.5(c) of the Order and communicate its review decisions to NARA.

(b) The agency must notify NARA of any other agency to which it forwards the request in those cases requiring the declassification determination of another agency to which NARA has not already sent a referral for review.

(c) The agency must return to NARA a complete copy of each referred document with the agency determination clearly stated to leave no doubt about the status of the information and the authority for its continued classification or its declassification.

§ 1260.76 What are NARA's procedures after it has received the agency's declassifications determination?

(a) If a document cannot be declassified in its entirety, the agency must return to NARA a copy of the document with those portions that require continued classification clearly marked. If a document requires continued classification in its entirety, the agency must return to NARA a copy of the document clearly so marked.

(b) NARA will notify the requester of the results of its review and make available copies of documents declassified in full and in part. If the requested information cannot be declassified in its entirety, NARA will send the requester a notice of the right to appeal the determination within 60 calendar days to the Deputy Archivist of the United States, National Archives and Records Administration, 8601 Adelphi Road, College Park, MD 20740–6001. Additional information on appeals is located in 36 CFR Part 1264 and in Appendix A to 32 CFR Part 2001 (Article VIII).

§ 1260.78 What is the appeal process when an MDR request for Executive Branch information in NARA's legal custody is denied in whole or in part?

(a) NARA shall respond to the requester in writing that her/his mandatory declassification review request was denied in full or in part and the rationale for the denial by using the appropriate category in either section 1.4 of the Order for information that is less than 25 years old, or section 3.3 of the Order for information that is older than 25 years, or 32 CFR 2001.30(p) for information governed by the Atomic Energy Act of 1954, as amended, or the National Security Act of 1947, as amended. NARA will send the requester a notice of the right to appeal the determination within 60 calendar days to the Deputy Archivist of the United States, National Archives and Records Administration, 8601 Adelphi Road, College Park, MD. If a final decision on the appeal is not made within 60 working days of the date of the appeal, the requester may appeal to the Interagency Security Classification Appeals Panel (ISCAP).

(b) NARA will process all appeals in accordance with 32 CFR 2001.33(a)(2)(iii). NARA will inform all agencies with equity interests in the denied information. Those agencies will assist NARA in the appellate process and provide NARA with final declassification review decisions in a timely manner and consistent with 32 CFR 2001.33(a)(2)(iii).

(c) NARA will also notify the requester of the right to appeal denials of access to the Interagency Security Classification Appeals Panel, Attn: Mandatory Declassification Review Appeals, c/o Information Security Oversight Office, National Archives and Records Administration, 700 Pennsylvania Avenue NW., Room 503, Washington, DC 20408; *iscap@nara.gov*.

(d) The pertinent NARA office or Presidential Library will coordinate the potential release of information declassified by the Interagency Security Classification Appeals Panel (ISCAP).

Subpart G—Reclassification of Records Transferred to NARA

§ 1260.80 What actions must NARA take when information in its physical and legal custody is reclassified after declassification under proper authority?

(a) When information in the physical and legal custody of NARA that has been available for public use following declassification under proper authority is proposed for reclassification in accordance with 32 CFR 2001.13(b)(1), NARA shall take the following actions:

(1) The agency head making the determination to reclassify the information shall notify the Archivist of the potential reclassification in writing,

(2) The Archivist shall suspend public access pending approval or disapproval by the Director of the Information Security Oversight Office of the reclassification request, and

(3) The Director of the Information Oversight Office shall normally make a decision on the validity of the reclassification request within 30 days, and

(4) The decision of the Director of ISOO may be appealed by the Archivist or the agency head to the President through the National Security Advisor.

(5) Access shall remain suspended pending a prompt decision on the appeal.

(b) [Reserved]

§ 1260.82 What actions must NARA take with information in its physical and legal custody that has been made available to the public after declassification without proper authority?

(a) When information in the physical and legal custody of NARA has been made available for public use following declassification without proper authority and needs to have its original classification markings restored, the original classification authority shall notify the Archivist in writing in accordance with 32 CFR 2001.13(a)(1).

(b) If the Archivist does not agree with the reclassification decision and the information is more than 25 years old, the information will be temporarily withdrawn from public access and the Archivist will appeal the agency decision to the Director of ISOO, who will make a final decision in accordance with 32 CFR 2001.13(a)(1). The decision of the Director of ISOO may be appealed by the Archivist or the agency head to the President through the National Security Advisor.

(c) Information about records that have been reclassified or have had their classification restored as described in §§ 1260.80 and 1260.82 will be made available quarterly through the NARA Web site, *http://www.archives.gov/about/plans-reports/withdrawn/*. Information will include the responsible agency, NARA location, date withdrawn, number of records, and number of pages.

SUBCHAPTER E—PRESIDENTIAL RECORDS

PART 1270—PRESIDENTIAL RECORDS

Subpart A—General Provisions

Sec.
1270.10 Scope of part.
1270.12 Application.
1270.14 Definitions.

Subpart B—Actions Taken on Behalf of Former Presidents

1270.20 Designation of person or persons to act for former President.
1270.22 When Archivist may act for former President.

Subpart C—Disposal of Presidential Records

1270.30 Disposal of Presidential Records by incumbent President.
1270.32 Disposal of Presidential Records in the custody of the Archivist.

Subpart D—Access to Presidential Records

1270.40 Identification of restricted records.
1270.42 Denial of access to public; right to appeal.
1270.44 Exceptions to restricted access.
1270.46 Notice of intent to disclose Presidential records.

Subpart E—Presidential Records Compiled for Law Enforcement Purposes

1270.50 Consultation with law enforcement agencies.

AUTHORITY: 44 U.S.C. 2201–2207.

SOURCE: 53 FR 50404, Dec. 15, 1988, unless otherwise noted.

Subpart A—General Provisions

§ 1270.10 Scope of part.

These regulations implement the provisions of the Presidential Records Act of 1978, Pub. L. No. 95–591, 92 Stat. 2523–27, as amended by Pub. L. No. 98–497, sec. 107(b)(7), 98 Stat. 2287 (1984) (codified at 44 U.S.C. 2201–07), by setting forth the policies and procedures governing preservation, protection, and disposal of, and access to Presidential and Vice-Presidential records created during a term of office of the President or Vice President beginning on or after January 20, 1981. Nothing in these regulations is intended to govern procedures for assertion of, or response to, any constitutionally based privilege which may be available to an incumbent or former President.

§ 1270.12 Application.

(a) These regulations apply to all Presidential records created during a term of office of the President beginning on or after January 20, 1981.

(b) Vice-Presidential records shall be subject to the provisions of this part in the same manner as Presidential records. The Vice President's duties and responsibilities, with respect to Vice-Presidential records, shall be the same as the President's duties and responsibilities with respect to Presidential records. The Archivist's authority with respect to Vice-Presidential records shall be the same as the Archivist's authority with respect to Presidential records, except that the Archivist may, when he determines it to be in the public interest, enter into an agreement with a non-Federal archival repository for the deposit of Vice-Presidential records.

§ 1270.14 Definitions.

For the purposes of this part—

(a) The terms *documentary material*, *Presidential records*, *personal records*, *Archivist*, and *former President* have the meanings given them by 44 U.S.C. 2201 (1)–(5), respectively.

(b) The term *agency* has the meaning given it by 5 U.S.C. 551(1) (A)–(D) and 552(f).

(c) The term *Presidential archival depository* has the meaning given it by 44 U.S.C. 2101(1).

(d) The term *Vice-Presidential records* means documentary materials, or any reasonably segregable portion thereof, created or received by the Vice President, his immediate staff, or a unit or individual of the Office of the Vice President whose function is to advise and assist the Vice President, in the course of conducting activities which relate to or have an effect upon the carrying out of the constitutional,

statutory, or other official or ceremonial duties of the Vice President. The term includes documentary materials of the kind included under the term *Presidential records*.

(e) The term *filed* means the date something is received in the office of the official to whom it is addressed.

Subpart B—Actions Taken on Behalf of Former Presidents

§ 1270.20 Designation of person or persons to act for former President.

(a) A President or former President may designate some person or persons to exercise, upon death or disability of the President or former President, any or all of the discretion or authority granted to the President or former President by chapter 22 of title 44 U.S.C.

(b) When a President or former President designates a person or persons to act for him pursuant to paragraph (a) of this section, this designation shall be effective only if the Archivist has received notice of the designation before the President or former President dies or is disabled.

(c) The notice required by paragraph (b) of this section shall be in writing, and shall include the following information:

(1) Name(s) of the person or persons designated to act for the President or former President;

(2) The current addresses of the person or persons designated; and

(3) The records, identified with reasonable specificity, over which the designee(s) will exercise discretion or authority.

§ 1270.22 When Archivist may act for former President.

In those instances where a President has specified, in accordance with 44 U.S.C. 2204(a), restrictions on access to Presidential records, but has not made a designation under § 1270.20 of this subpart, the Archivist shall, upon the death or disability of a President or former President, exercise the discretion or authority granted to a President or former President by 44 U.S.C. 2204.

Subpart C—Disposal of Presidential Records

§ 1270.30 Disposal of Presidential records by incumbent President.

A President may, while in office, dispose of any Presidential records which in his opinion lack administrative, historical, informational, or evidentiary value if one of the following two sets of requirements is satisfied:

(a)(1) The President has obtained the written views of the Archivist concerning the proposed disposal; and

(2) The Archivist states in his written views to the President that he does not intend to request, with respect to the President's proposed disposal of Presidential records, the advice of the Committees on Rules and Administration and Governmental Affairs of the Senate, and the Committees on House Administration and Government Operations of the House of Representatives because he does not consider—

(i) The records proposed for disposal to be of special interest to the Congress; or

(ii) Consultation with the Congress concerning the proposed disposal to be in the public interest; or

(b)(1) The President has obtained the written views of the Archivist concerning the proposed disposal;

(2) The Archivist states in his written views either—

(i) That the records proposed for disposal may be of special interest to the Congress; or

(ii) That consultation with the Congress concerning the proposed disposal is in the public interest; and

(3) The President submits copies of the proposed disposal schedule to the Committees on Rules and Administration and Governmental Affairs of the Senate and the Committees on House Administration and Government Operations of the House of Representatives at least 60 calendar days of continuous session of Congress in advance of the proposed disposal date. For the purpose of this section, continuity of session is broken only by an adjournment of Congress *sine die*, and the days on which either House is not in session because of an adjournment of more than 3 days to

a day certain are excluded in the computation of the days in which Congress is in continuous session.

§ 1270.32 Disposal of Presidential Records in the custody of the Archivist.

(a) The Archivist may dispose of Presidential records which he has appraised and determined to have insufficient administrative, historical, informational, or evidentiary value to warrant their continued preservation.

(b) When Presidential records are scheduled for disposal pursuant to paragraph (a) of this section, the Archivist shall publish a notice of this disposal in the FEDERAL REGISTER at least 60 days before the proposed disposal date.

(c) The notice required by paragraph (b) of this section, shall include the following:

(1) A reasonably specific description of the records scheduled for disposal; and

(2) A concise statement of the reason for disposal of the records.

(d) Publication in the FEDERAL REGISTER of the notice required by paragraph (b) of this section shall constitute a final agency action for purposes of review under chapter 7 of title 5 U.S.C. (5 U.S.C. 701–706).

Subpart D—Access to Presidential Records

§ 1270.40 Identification of restricted records.

(a) If a President, prior to the conclusion of his term of office or last consecutive term of office, as the case may be, specifies durations, not to exceed 12 years, for which access to certain information contained in Presidential records shall be restricted, in accordance with 44 U.S.C. 2204, the Archivist or his designee shall identify the Presidential records affected, or any reasonably segregable portion thereof, in consultation with that President or his designated representative(s).

(b) The Archivist shall restrict public access to the information contained in those records identified as affected until—

(1) The date on which the former President waives the restriction on disclosure of the record or information contained within;

(2) The expiration of the period of restriction specified under 44 U.S.C. 2204(a) for the category of information under which a certain record, or a portion thereof, was restricted; or

(3) The Archivist has determined that the former President or an agent of the former President has placed in the public domain through publication a restricted record or a reasonably segregable portion thereof, if this date is earlier than either of the dates specified in paragraph (b)(1) or (2) of this section.

§ 1270.42 Denial of access to public; right to appeal.

(a) Any person denied access to a Presidential record (hereinafter *the requester*) because of a determination that the record or a reasonable segregable portion of the record was properly restricted under 44 U.S.C. 2204(a), and not placed in the public domain by the former President or his agent, may file an administrative appeal with the appropriate Presidential library director at the address cited in part 1253 of this chapter.

(b) All appeals must be received by NARA within 35 calendar days of the date of NARA's denial letter.

(c) Appeals shall be in writing and shall set forth the reason(s) why the requester believes access to the records sought should be allowed. The requester shall identify the specific records sought.

(d) Upon receipt of an appeal, the appropriate Presidential library director has 30 working days from the date an appeal is received to consider the appeal and respond in writing to the requester. The director's response must state whether or not the Presidential records requested are to be released and the basis for this determination. The director's decision to withhold release of Presidential records is final and not subject to judicial review.

[53 FR 50404, Dec. 15, 1988, as amended at 70 FR 16717, Apr. 1, 2005]

§ 1270.44 Exceptions to restricted access.

(a) Notwithstanding any restrictions on access imposed pursuant to section

2204 or these regulations, and subject to any rights, defenses, or privileges which the United States or any agency or person may invoke, Presidential records shall be made available in the following instances:

(1) Pursuant to subpoena or other judicial process properly issued by a court of competent jurisdiction for the purposes of any civil or criminal investigation or proceeding;

(2) To an incumbent President if the records sought contain information which is needed for the conduct of current business of his office and is not otherwise available;

(3) To either House of Congress, or, to the extent of matter within its jurisdiction, to a Congressional committee or subcommittee if the records sought contain information which is needed for the conduct of business within its jurisdiction and is not otherwise available.

(b) Requests by an incumbent President, a House of Congress, or a Congressional committee or subcommittee pursuant to paragraph (a) of this section shall be addressed to the Archivist. All requests shall be in writing and, where practicable, identify the records sought with reasonable specificity.

(c) Presidential records of a former President shall be available to the former President or his designated representative upon request.

§ 1270.46 Notice of intent to disclose Presidential records.

(a) The Archivist or his designee shall notify a former President or his designated representative(s) before any Presidential records of his Administration are disclosed.

(b)(1) The notice given by the Archivist or his designee shall:

(i) Be in writing;

(ii) Identify the particular records with reasonable specificity;

(iii) State the reason for the disclosure; and

(iv) Specify the date on which the record will be disclosed.

(2) In the case of records to be disclosed in accordance with § 1270.44, the notice shall also:

(i) Identify the requester and the nature of the request;

(ii) Specify whether the requested records contain materials to which access would otherwise be restricted pursuant to 44 U.S.C. 2204(a) and identify the category of restriction within which the record to be disclosed falls; and

(iii) Specify the date of the request.

(c) If, after receiving the notice required by paragraph (a) of this section, a former President raises rights or privileges which he believes should preclude the disclosure of a Presidential record, and the Archivist nevertheless determines that the record in question should be disclosed, in whole or in part, the Archivist shall notify the former President or his representative of this determination. The notice given by the Archivist or his designee shall:

(1) Be in writing;

(2) State the basis upon which the determination to disclose the record is made; and

(3) Specify the date on which the record will be disclosed.

(d) The Archivist shall not disclose any records covered by any notice required by paragraph (a) or (c) of this section for at least 30 calendar days from receipt of the notice by the former President, unless a shorter time period is required by a demand for Presidential records under § 1270.44.

(e) Copies of all notices provided to former Presidents under this section shall be provided at the same time to the incumbent President.

Subpart E—Presidential Records Compiled for Law Enforcement Purposes

§ 1270.50 Consultation with law enforcement agencies.

(a) For the processing of Presidential records compiled for law enforcement purposes that may be subject to 5 U.S.C. 552(b)(7), the Archivist shall request specific guidance from the appropriate Federal agency on the proper treatment of a record if there is no general guidance applicable, if the record is particularly sensitive, or if the type of record or information is widespread throughout the files.

(b) When specific agency guidance is requested under paragraph (a) of this section, the Archivist shall notify the

appropriate Federal agency of the decision regarding disclosure of the specific documents. Notice shall include the following:

(1) A description of the records in question;

(2) Statements that the records described contain information compiled for law enforcement purposes and may be subject to the exemption provided by 5 U.S.C. 552(b)(7) for records of this type; and,

(3) The name of a contact person at NARA.

(c) Agency guidance under this section is not binding on the Archivist. The final determination on whether Presidential records may be subject to the exemption in 5 U.S.C. 552(b)(7) is the Archivist's responsibility.

SUBCHAPTER F—NIXON PRESIDENTIAL MATERIALS

PART 1275—PRESERVATION AND PROTECTION OF AND ACCESS TO THE PRESIDENTIAL HISTORICAL MATERIALS OF THE NIXON ADMINISTRATION

Sec.
1275.1 Scope of part.

Subpart A—General Provisions

1275.10 Purpose.
1275.12 Application.
1275.14 Legal custody.
1275.16 Definitions.
1275.18 Requests or demands for access.

Subpart B—Preservation and Protection

1275.20 Responsibility.
1275.22 Security.
1275.24 Archival processing.
1275.26 Access procedures.
1275.28 Extraordinary authority during emergencies.

Subpart C—Access to Materials by Former President Nixon, Federal Agencies, and for Use in Any Judicial Proceeding

1275.30 Access by former President Nixon.
1275.32 Access by Federal agencies.
1275.34 Access for use in judicial proceedings.

Subpart D—Access by the Public

1275.40 Scope of subpart.
1275.42 Processing period; notice of proposed opening.
1275.44 Rights and privileges; right to a fair trial.
1275.46 Segregation and review; Senior Archival Panel; Presidential Materials Review Board.
1275.48 Transfer of materials.
1275.50 Restriction of materials related to abuses of governmental power.
1275.52 Restriction of materials of general historical significance unrelated to abuses of governmental power.
1275.54 Periodic review of restrictions.
1275.56 Appeal of restrictions.
1275.58 Deletion of restricted portions.
1275.60 Requests for declassification.
1275.62 Reference room locations, hours, and rules.
1275.64 Reproduction of tape recordings of Presidential conversations.
1275.66 Reproduction and authentication of other materials.
1275.68 Amendment of regulations.
1275.70 Freedom of information requests.

APPENDIX A TO PART 1275—SETTLEMENT AGREEMENT

AUTHORITY: 44 U.S.C. 2104, 2111 note.

SOURCE: 51 FR 7230, Feb. 28, 1986, unless otherwise noted.

§ 1275.1 Scope of part.

This part sets forth policies and procedures concerning the preservation and protection of and access to the tape recordings, papers, documents, memorandums, transcripts, and other objects and materials which constitute the Presidential historical materials of Richard M. Nixon, covering the period beginning January 20, 1969, and ending August 9, 1974.

Subpart A—General Provisions

§ 1275.10 Purpose.

This part 1275 implements the provisions of title I of the Presidential Recordings and Materials Preservation Act (Pub. L. 93–526; 88 Stat. 1695). It prescribes policies and procedures by which the National Archives and Records Administration will preserve, protect, and provide access to the Presidential historical materials of the Nixon Administration.

§ 1275.12 Application.

This part 1275 applies to all of the Presidential historical materials of the Nixon Administration in the custody of the Archivist of the United States pursuant to the provisions of title I of the Presidential Recordings and Materials Preservation Act (Pub. L. 93–526; 88 Stat. 1695).

§ 1275.14 Legal custody.

The Archivist of the United States has or will obtain exclusive legal custody and control of all Presidential historical materials of the Nixon Administration held pursuant to the provisions of title I of the Presidential Recordings and Materials Preservation Act (Pub. L. 93–526; 88 Stat. 1695).

§ 1275.16 Definitions.

For the purposes of this part 1275, the following terms have the meaning ascribed to them in this § 1275.16.

(a) *Presidential historical materials.* The term *Presidential historical materials* (also referred to as *historical materials* and *materials*) shall mean all papers, correspondence, documents, pamphlets, books, photographs, films, motion pictures, sound and video recordings, machine-readable media, plats, maps, models, pictures, works of art, and other objects or materials made or received by former President Richard M. Nixon or by members of his staff in connection with his constitutional or statutory powers or duties as President and retained or appropriate for retention as evidence of or information about these powers or duties. Included in this definition are materials relating to the political activities of former President Nixon or members of his staff, but only when those activities directly relate to or have a direct effect upon the carrying out of constitutional or statutory powers or duties. Excluded from this definition are documentary materials of any type that are determined to be the official records of an agency of the Government; private or personal materials; stocks of publications, processed documents, and stationery; and extra copies of documents produced only for convenience or reference when they are clearly so identified.

(b) *Private or personal materials.* The term *private or personal materials* shall mean those papers and other documentary or commemorative materials in any physical form relating solely to a person's family or other non-governmental activities, including private political associations, and having no connection with his constitutional or statutory powers or duties as President or as a member of the President's staff.

(c) *Abuses of governmental power popularly identifed under the generic term ''Watergate.''* The term *abuses of governmental power popularly identified under the generic term ''Watergate''* (also referred to as *abuses of governmental power*), shall mean those alleged acts, whether or not corroborated by judicial, administrative or legislative proceedings, which allegedly were conducted, directed or approved by Richard M. Nixon, his staff or persons associated with him in his constitutional or statutory functions as President, or as political activities directly relating to or having a direct effect upon those functions, and which—

(1) Were within the purview of the charters of the Senate Select Committee on Presidential Campaign Activities or the Watergate Special Prosecution Force; or

(2) Are circumscribed in the Articles of Impeachment adopted by the House Committee on the Judiciary and reported to the House of Representatives for consideration in House Report No. 93–1305.

(d) *General historical significance.* The term *general historical significance* shall mean having administrative, legal, research or other historical value as evidence of or information about the constitutional or statutory powers or duties of the President, which an archivist has determined is of a quality sufficient to warrant the retention by the United States of materials so designated.

(e) *Archivist.* The term *Archivist* shall mean the Archivist of the United States or his designated agent. The term *archivist* shall mean an employee of the National Archives and Records Administration who, by education or experience, is specially trained in archival science.

(f) *Agency.* The term *agency* shall mean an executive department, military department, independent regulatory or nonregulatory agency, Government corporation, Government-controlled corporation, or other establishment in the executive branch of the Government including the Executive Office of the President. For purposes of § 1275.32 only, the term *agency* shall also include the White House Office.

(g) *Archival processing.* The term *archival processing* may include the following general acts performed by archivists with respect to the Presidential historical materials: Shelving boxes of documents in chronological, alphabetical, numerical or other sequence; surveying and developing a location register and cross-index of the boxes; arranging materials; refoldering and reboxing the documents and

affixing labels; producing finding aids such as folder title lists, scope and content notes, biographical data, and series descriptions; rewinding, duplicating and preserving the original tape recordings; enhancing the tape recordings on which the conversations are wholly or partially unintelligible so that extraneous noises may be filtered out; producing general subject matter logs of the tape recordings; reproducing and transcribing tape recordings; reviewing the materials to identify items that appear subject to restriction; identifying items in poor physical condition and assuring their preservation; identifying materials requiring further processing; and preparation for public access of all materials which are not subject to restriction.

(h) *Staff*. The term *staff* shall mean those persons whose salaries were paid fully or partially from appropriations to the White House Office or Domestic Council, or who were detailed on a nonreimbursable basis to the White House Office or Domestic Council from any other Federal activity; or those pesons who otherwise were designated as assistants to the President, in connection with their service in that capacity; or any persons whose files were sent to the White House Central Files Unit or Special Files Unit, for purposes of those files.

(i) *National security classified information*. The term *national security classified information* shall mean any matter which is security classified under existing law, and has been or should be designated as such.

[51 FR 7230, Feb. 28, 1986, as amended at 61 FR 17844, Apr. 23, 1996]

§ 1275.18 Requests or demands for access.

Each agency which receives a request or legal demand for access to Presidential historical materials of the Nixon Administration shall immediately forward the request or demand to the Archivist of the United States, National Archives and Records Administration (NARA), Washington, DC 20408.

Subpart B—Preservation and Protection

§ 1275.20 Responsibility.

The Archivist is responsible for the preservation and protection of the Nixon Presidential historical materials.

[61 FR 17845, Apr. 23, 1996]

§ 1275.22 Security.

The Archivist is responsible for providing adequate security for the Presidential historical materials.

§ 1275.24 Archival processing.

When authorized by the Archivist and until the commencement of archival processing in accordance with subpart D of this part, archivists may process the Presidential historical materials to the extent necessary for protecting and preserving the materials, and for providing authorized access to the materials pursuant to subpart C of this part.

§ 1275.26 Access procedures.

(a) The Archivist will receive and/or prepare appropriate documentation of each access authorized under this part 1275.

(b) Entry to the records storage areas will be provided by the Archivist only to archival, maintenance, security, or other necessary personnel or to Mr. Nixon or his agent. Two persons, at least one of whom represents the Archivist, will be present at all times that records storage areas are occupied.

(c) The Archivist will determine that each individual having access to the Presidental historical materials has a security clearance equivalent to the highest degree of national security classification that may be applicable to any of the material examined.

(d) The Archivist will provide former President Nixon or his designated attorney or agent (hereinafter Mr. Nixon), prior notice of, and allow him to be present during, each search necessary to comply with an authorized access under § 1275.32 or § 1275.34.

(e) Only NARA archivists shall conduct searches necessary to comply with

authorized accesses under §§ 1275.32 and 1275.34.

(f) Prior to releasing Presidential historical materials in accordance with an access authorized under § 1275.32 or § 1275.34, the Archivist will give Mr. Nixon notice of the nature and identity of, and at his request allow him access to, those Presidential historical materials which the archivists have determined are covered by the subpoena, or other lawful process, or request. The notice will also inform Mr. Nixon that he may file a claim with the Archivist objecting to the release of all or portions of the described materials within 5 workdays of his receiving the notice described herein. The claim should detail the alleged rights and privileges of Mr. Nixon which would be violated by the release of the materials. The Archivist will refrain from releasing any of the materials to the requester during this period, and while any claim of right or privilege is pending before him, will refrain from releasing the materials subject to the claim.

(g) The Archivist will notify Mr. Nixon in writing of the administrative determination on any claims filed in accordance with paragraph (f) of this section. In the event the determination is wholly or partially adverse to the claim, the Archivist will refrain from releasing the materials to the requester for an additional 5 workdays from Mr. Nixon's receipt of the determination.

(h) Whenever possible, a copy, which shall be certified upon request, instead of the original documentary Presidential historical materials shall be provided to comply with a subpoena or other lawful process or request. Whenever the original documentary material is removed, a certified copy of the material shall be inserted in the proper file until the return of the original.

§ 1275.28 Extraordinary authority during emergencies.

In the event of an emergency that threatens the physical preservation of the Presidential historical materials or their environs, the Archivist will take such steps as may be necessary, including removal of the materials to temporary locations outside the metropolitan area of the District of Columbia, to preserve and protect the materials.

Subpart C—Access to Materials by Former President Nixon, Federal Agencies, and For Use in Any Judicial Proceeding

§ 1275.30 Access by former President Nixon.

In accordance with the provisions of subpart B of this part, former President Richard M. Nixon or his designated agent shall at all times have access to Presidential historical materials in the custody and control of the Archivist.

§ 1275.32 Access by Federal agencies.

In accordance with the provisions of subpart B of this part, any Federal agency or department in the executive branch shall have access for lawful Government use to the Presidential historical materials in the custody and control of the Archivist to the extent necessary for ongoing Government business. The Archivist will only consider written requests from heads of agencies or departments, deputy heads of agencies or departments, or heads of major organizational components or functions within agencies or departments.

§ 1275.34 Access for use in judicial proceedings.

In accordance with the provisions of subpart B of this part, and subject to any rights, defenses, or privileges which the Federal Government or any person may invoke, the Presidential historical materials in the custody and control of the Archivist will be made available for use in any judicial proceeding and are subject to subpoena or other lawful process.

Subpart D—Access by the Public

§ 1275.40 Scope of subpart.

This subpart sets forth policies and procedures concerning public access to the Presidential historical materials of Richard M. Nixon.

§ 1275.42 Processing period; notice of proposed opening.

(a)(1) The archivists will conduct archival processing of those materials other than tape recordings to prepare them for public access. In processing the materials, the archivists will give priority to segregating private or personal materials and transferring them to their proprietary or commemorative owner in accordance with § 1275.48. In conducting such archival processing, the archivists will restrict portions of the materials pursuant to §§ 1275.50 and 1275.52. All materials other than tape recordings to which reference is made in § 1275.64 will be prepared for public access and released subject to restrictions or outstanding claims or petitions seeking such restrictions. The Archivist will open for public access each integral file segment of materials upon completion of archival processing of that segment.

(2) The archivists will conduct archival processing of the tape recordings to prepare them for public access in accordance with the provisions set forth in the Settlement Agreement (see Appendix A to this part). In conducting the archival processing of the tape recordings, the archivists will restrict segments of the tape recordings pursuant to §§ 1275.50 and 1275.52. The tape segments which consist of abuses of governmental power information, as defined in § 1275.16(c), will be given priority processing by the archivists and will be prepared for public access and released following review and resolution of objections from the Nixon estate and other interested parties as set forth in the Settlement Agreement (see Appendix A to this Part). After the tape segments which consist of abuses of governmental power information have been released, the archivists will conduct archival processing of those tape recordings which were taped in the Cabinet Room, as set forth in the Settlement Agreement, Appendix A to this Part. Following release of the Cabinet Room tape recordings, the remaining tape recordings will be prepared for public access and released in five segments in accordance with the schedule set forth in the Settlement Agreement. In addition, NARA will identify and return any additional private or personal segments to the Nixon estate, at approximately the time that NARA proposes each segment for public release.

(b) At least 30 calendar days prior to the opening to public access of any integral file segment of the materials, the Archivist will publish notice in the FEDERAL REGISTER of the proposed opening. The notice will reasonably identify the material to be opened and will include a reference to the right of any interested person to file a claim or petition in accordance with § 1275.44. Copies of the notice will be sent to the incumbent President of the United States or his designated agent and by first-class mail to the last known address of: Mr. Nixon, or his designated agent or heirs; any former staff member reasonably identifiable as the individual responsible for creating or maintaining the file segment proposed to be opened; any individual named in the material which the Archivist may not restrict in accordance with § 1275.50(b) because the material is essential to an understanding of any abuse of governmental power; and any persons named in the materials who are registered with the National Archives and Records Administration in accordance with paragraph (c) of this section.

(c) The Archivist will maintain a registry which shall contain the names and mailing addresses of persons who wish to receive personal notice of the proposed opening of integral file segments of the materials when those segments contain references about them. To be included in the registry, a person must submit his/her name and mailing address to the National Archives and Records Administration (NLN), Washington, DC 20408. Both the envelope and letter should be prominently marked, ''Nixon Materials Registry.'' By submitting his/her name for inclusion in the registry, a person agrees to reimburse the United States for the cost of first-class postage for each instance of personal notice received.

[51 FR 7230, Feb. 28, 1986, as amended at 61 FR 17845, Apr. 23, 1996]

§ 1275.44 Rights and privileges; right to a fair trial.

(a) Within 30 days following publication of the notice prescribed in

§ 1275.42(b), any person claiming a legal or constitutional right or privilege which would prevent or limit public access to any of the materials shall notify the Archivist in writing of the claimed right or privilege and the specific materials to which it relates. Unless the claim states that particular materials are private or personal (see paragraph (d) of this section), the Archivist will notify the claimant by certified mail, return receipt requested, of his decision regarding public access to the pertinent materials. If that decision is adverse to the claimant, the Archivist will refrain from providing public access to the pertinent materials for at least 30 calendar days from receipt by the claimant of such notice.

(b) Within 30 days following publication of the notice prescribed in § 1275.42(b), officers of any Federal, State, or local court and other persons who believe that public access to any of the materials may jeopardize an individual's right to a fair and impartial trial should petition the Archivist setting forth the relevant circumstances that warrant withholding specified materials. The Archivist will notify the petitioner by certified mail, return receipt requested, of his decision regarding public access to the pertinent materials. If that decision is adverse to the petitioner, the Archivist will refrain from providing public access to the pertinent materials for at least 30 calendar days from receipt by the petitioner of such notice.

(c) In reaching decisions required by paragraphs (a) and (b) of this section, the Archivist may consult with other appropriate Federal agencies. If these consultations require the transfer of copies of the materials to Federal officials in agencies other than the National Archives and Records Administration, the Archivist will transfer these copies in accordance with the procedures prescribed in §§ 1275.26 and 1275.32.

(d) Within 30 days following publication of notice prescribed in § 1275.42(b), any person claiming that materials proposed for public access are in fact private or personal, as defined in § 1275.16(b), and that he or she is the proprietary or commemorative owner of those materials shall notify the Archivist in writing. The claim shall describe the specific materials to which it refers, and the claimant's basis for concluding that these materials are private or personal. Upon receipt of such a claim, the Archivist will transmit it to the Presidential Materials Review Board for its consideration and determination in accordance with § 1275.46(i). The Archivist will refrain from providing public access to the pertinent materials or from returning them to the claimant for at least 30 calendar days from receipt by the claimant or any intervening parties of the Board's determination.

(e)(1) In place of the right to make all other objections with respect to the tape segments that NARA has designated as abuses of governmental power materials, the Nixon estate may object to their release only on the ground that such designation by NARA is clearly inconsistent with the term ''abuses of governmental power'' as used in § 104(a)(1) of the Presidential Recordings and Materials Preservation Act (PRMPA) and defined in § 1275.16(c), as qualified by § 1275.50(b). Any such objection may not be based on isolated instances of alleged failure by NARA to apply the appropriate review standard, but only on a pattern of misapplication of the requirements of the PRMPA and its implementing regulations. Further, any such objection must be accompanied by specific examples of alleged review errors and contain sufficient information to enable the review panel of three Presidential Library archivists appointed by the Archivist, as described in the Settlement Agreement, Appendix A to this Part, to locate those examples readily.

(2) If an objection is made by the Nixon estate to the abuses of governmental power tape segments, the matter shall be immediately referred to a panel of three Presidential Library archivists appointed by the Archivist as set forth in the Settlement Agreement, Appendix A to this Part. The decision of the panel shall be either that the Nixon estate's objection is sustained or that it is rejected. The decision shall include a brief statement of the panel's reasons, but it need not include an item-by-item determination. In deciding whether the designation by NARA

of the material proposed to be released is clearly inconsistent with the definition of ''abuses of governmental power'', the panel shall consider whether the release would seriously injure legitimate interests of identifiable individuals, whether the errors suggest a pattern of misinterpretation, and any other factor that bears on the issue of whether NARA's designation of material as relating to ''abuses of governmental power'' was reasonable, considered as a whole. The panel's decision shall be final and binding on all parties to the *Kutler* litigation, and no party may exercise any right to appeal to any person, board, or court that might otherwise be available.

(3) The Nixon estate may, at any time, elect to use the procedures outlined in paragraphs (e)(1) and (e)(2) of this section for the tape recordings other than the abuses of governmental power segments, except that the standard under which objections shall be made by the Nixon estate, and under which the review panel shall decide their merits, is whether the release taken as a whole is plainly inconsistent with the requirements of the Presidential Recordings and Materials Preservation Act of 1974 and these regulations. If the Nixon estate elects to use the procedures in paragraph 1 of the Settlement Agreement (Appendix A to this Part) in place of the provisions in paragraphs 4 (b) and (d) and 5(c) of the Settlement Agreement for a tape segment, the estate cannot subsequently revert back to the formal objection process set forth in this section for that tape segment.

[51 FR 7230, Feb. 28, 1986; 51 FR 8671, Mar. 13, 1986, as amended at 61 FR 17845, Apr. 23, 1996]

§ 1275.46 Segregation and review; Senior Archival Panel; Presidential Materials Review Board.

(a) During the processing period described in § 1275.42(a), the Archivist will assign archivists to segregate private or personal materials, as defined in § 1275.16(b). The archivists shall have sole responsibility for the initial review and determination of private or personal materials. At all times when the archivists or other authorized officials have access to the materials in accordance with these regulations, they shall take all reasonable steps to minimize the degree of intrusion into private or personal materials. Except as provided in these regulations, the archivists or other authorized officials shall not disclose to any person private or personal or otherwise restricted information learned as a result of their activities under these regulations.

(b) During the processing period described in § 1275.42(a), the Archivist will assign archivists to segregate materials neither relating to abuses of governmental power, as defined in § 1275.16(c), nor otherwise having general historical significance, as defined in § 1275.16(d). The archivists shall have sole responsibility for the initial review and determination of those materials which are not related to abuses of governmental power and do not otherwise have general historical significance.

(c) During the processing period described in § 1275.42(a), the Archivist will assign archivists to segregate materials subject to restriction, as prescribed in §§ 1275.50 and 1275.52. The archivists shall have sole responsibility for the initial review and determination of materials that should be restricted. The archivists shall insert a notification of withdrawal at the front of the file folder or container affected by the removal of restricted material. The notification shall include a brief description of the restricted material and the basis for the restriction as prescribed in §§ 1275.50 and 1275.52.

(d) If the archivists are unable to make a determination required in paragraphs (a), (b), or (c) of this section, or if the archivists conclude that the required determination raises significant issues involving interpretation of these regulations or will have far-reaching precedential value, the archivists shall submit the pertinent materials, or representative examples of them, to a panel of senior archivists selected by the Archivist. The Panel shall then have the sole responsibility for the initial determination required in paragraphs (a), (b), or (c) of this section.

(e) If the Senior Archival Panel is unable to make a determination required in paragraph (d) of this section, or if the panel concludes that the required

determination raises significant issues involving interpretation of these regulations or will have far-reaching precedential value, the Panel shall certify the matter and submit the pertinent materials, or representative examples of them, to the Presidential Materials Review Board.

(f) The Presidential Materials Review Board (Board) shall consist of the Archivist, who shall serve as Chairman, and the following additional members:

(1) The Assistant Archivist for the Office of the National Archives;

(2) The Assistant Archivist for the Office of the Presidential Libraries;

(3) The Director of the Legal Counsel Staff of the National Archives and Records Administration; and

(4) The Historian of a Federal agency who shall be selected by the Archivist in his capacity as Chairman.

The Board shall meet at the call of the Chairman. Three members of the Board shall constitute a quorum for the conduct of the Board's business, although each member of the Board may participate in all of the Board's decisions. Members of the Board may be represented by their delegates on those occasions when they are unable to attend the meetings of the Board. The Board may consult with officials of interested Federal agencies in formulating its decisions. To the extent these consultations require the transfer of copies of materials to Federal officials outside the National Archives and Records Administration, the Board shall comply with the requirements of §§ 1275.26 and 1275.32.

(g) When the matter certified to the Board by the Senior Archival Panel involves a determination required in paragraphs (a) or (b) of this section, the Board shall prepare a final written decision, together with dissenting and concurring opinions, of the proper categorization and disposition of the pertinent materials. The Board's decision will be the final administrative determination.

(h) When the matter certified to the Board by the Senior Archival Panel involves a determination required in paragraph (c) of this section, the Board shall recommend an initial determination to the Senior Archival Panel, which shall retain the sole responsibility for the initial determination.

(i) When the Board considers a matter referred to it by the Archivist as provided in § 1275.44(d), it shall follow these procedures:

(1) The Board shall notify the claimant of its consideration of the claim, and invite the claimant to supplement at his discretion the basis for the claim.

(2) The Board will publish notice in the FEDERAL REGISTER, advising the public of its consideration of the claim, and describing the materials in question as fully as reasonably possible without disclosing arguably private or personal information. The notice will further advise that any member of the public may petition the Board within 15 calendar days of the publication of notice, setting forth the intervenor's views concerning the public or private nature of the materials.

(3) The Board shall take into account the positions maintained by the claimant and any intervenors in reaching its decision. The Board shall issue its decision, including dissenting and concurring opinions, no sooner than 20 days nor later than 60 days from the publication of notice in the FEDERAL REGISTER provided in paragraph (h)(2), of this section. The Board's decision shall be the final administrative determination. The Archivist will notify the claimant and any intervenors of the Board's decision by certified mail, return receipt requested, and shall refrain from acting upon that decision for 30 calendar days as provided in § 1275.44(d).

[51 FR 7230, Feb. 28, 1986, as amended at 61 FR 17845, Apr. 23, 1996]

§ 1275.48 Transfer of materials.

(a) The Archivist will transfer sole custody and use of those materials determined to be private or personal, or to be neither related to abuses of governmental power nor otherwise of general historical significance, to former President Nixon's estate, or, when appropriate and after notifying the Nixon estate, to the former staff member having primary proprietary or commemorative interest in the materials. Such materials to be transferred include all

segments of the original tape recordings that have been or will be identified as private or personal.

(b) Materials determined to be neither related to abuses of governmental power nor otherwise of general historical significance, and transferred pursuant to paragraph (a) of this section, shall upon such transfer no longer be deemed Presidential historical materials as defined in § 1275.16(a).

[51 FR 7230, Feb. 28, 1986, as amended at 61 FR 17845, Apr. 23, 1996; 64 FR 56678, Oct. 21, 1999]

§ 1275.50 Restriction of materials related to abuses of governmental power.

(a) The Archivist will restrict access to materials determined during the processing period to relate to abuses of governmental power, as defined in § 1275.16(c), when:

(1) The Archivist, in accordance with § 1275.44, is in the process of reviewing or has determined the validity of a claim by any person of a legal or constitutional right or privilege; or

(2) The Archivist, in accordance with § 1275.44, is in the process of reviewing or has determined the validity of a petition by any person of the need to protect an individual's right to a fair and impartial trial; or

(3) The release of the materials would violate a Federal statute; or

(4) The materials are authorized under criteria established by Executive order to be kept secret in the interest of national defense or foreign policy, provided that any question as to whether materials are in fact properly classified or are properly subject to classification shall be resolved in accordance with the applicable Executive order or as otherwise provided by law. However, the Archivist may waive this restriction when:

(i)(A) The requester is engaged in a historical research project; or

(B) The requester is a former Federal official who had been appointed by the President to a policymaking position and who seeks access only to those classified materials which he originated, reviewed, signed or received while in public office; and

(ii) The requester has a security clearance equivalent to the highest degree of national security classification that may be applicable to any of the materials to be examined; and

(iii) The Archivist has determined that the heads of agencies having subject matter interest in the material do not object to the granting of access to the materials; and

(iv) The requester has signed a statement, which declares that the requester will not publish, disclose, or otherwise compromise the classified material to be examined and that the requester has been made aware of Federal criminal statutes which prohibit the compromise or disclosure of this information.

(b) The Archivist will restrict access to any portion of materials determined to relate to abuses of governmental power when the release of those portions would constitute a clearly unwarranted invasion of personal privacy or constitute libel of a living person: *Provided,* That if material related to an abuse of governmental power refers to, involves or incorporates such personal information, the Archivist will make available such personal information, or portions thereof, if such personal information, or portions thereof, is essential to an understanding of the abuses of governmental power.

§ 1275.52 Restriction of materials of general historical significance unrelated to abuses of governmental power.

(a) The Archivist will restrict access to materials determined during the processing period to be of general historical significance, but not related to abuses of governmental power, under one or more of the circumstances specified in § 1275.50(a).

(b) The Archivist will restrict access to materials of general historical significance, but not related to abuses of governmental power, when the release of these materials would:

(1) Disclose trade secrets and commercial or financial information obtained from a person and privileged or confidential; or

(2) Constitute a clearly unwarranted invasion of personal privacy or constitute libel of a living person; or

(3) Disclose investigatory materials compiled for law enforcement purposes,

but only when the disclosure of such records would:

(i) Interfere with enforcement proceedings;

(ii) Deprive a person of a right to a fair trial or an impartial adjudication;

(iii) Constitute an unwarranted invasion of personal privacy;

(iv) Disclose the identity of a confidential source, and in the case of a record compiled by a criminal law enforcement authority in the course of a criminal investigation or by an agency conducting a lawful national security intelligence investigation, confidential information furnished only by the confidential source;

(v) Disclose investigative techniques and procedures; or

(vi) Endanger the life or physical safety of law enforcement personnel.

§ 1275.54 Periodic review of restrictions.

The Archivist periodically will assign archivists to review materials placed under restriction by § 1275.50 or § 1275.52 and to make available for public access those materials which, with the passage of time or other circumstances, no longer require restriction. If the archivists are unable to determine whether certain materials should remain restricted, the archivists shall submit the pertinent materials, or representative examples of them, to the Senior Archival Panel described in § 1275.44(d), which shall then have the responsibility for determining if the materials should remain restricted. The Senior Archival Panel may seek the recommendations of the Presidential Materials Review Board, in the manner prescribed in paragraph (e) and (h) of § 1275.46, in making its determination. Before opening previously restricted materials, the Archivist will comply with the notice requirements of § 1275.42(b).

[51 FR 7230, Feb. 28, 1986; 51 FR 8671, Mar. 13, 1986]

§ 1275.56 Appeal of restrictions.

Upon petition of any researcher who claims in writing to the Archivist that the restriction of specified materials is inappropriate and should be removed, the archivists shall submit the pertinent materials, or representative examples of them, to the Presidential Materials Review Board described in § 1275.46(f). The Board shall review the restricted materials, and consult with interested Federal agencies as necessary. To the extent these consultations require the transfer of copies of materials to Federal officials outside the National Archives and Records Administration, the Board shall comply with the requirements of §§ 1275.26 and 1275.32. As necessary and practicable, the Board shall also seek the views of any person, including former President Nixon, whose rights or privileges might be adversely affected by a decision to open the materials. The Board shall prepare a final written decision, including dissenting and concurring opinions, as to the continued restriction of all or part of the pertinent materials. The Board's decision shall be the final administrative determination. The Archivist will notify the petitioner and other interested persons of the final administrative determination within 60 calendar days following receipt of such petition. If the Board's decision is to open previously restricted materials, the Archivist will comply with the notice requirements of § 1275.42(b).

[51 FR 7230, Feb. 28, 1986, as amended at 61 FR 17846, Apr. 23, 1996]

§ 1275.58 Deletion of restricted portions.

The Archivist will provide a requester any reasonably segregable portions of otherwise restricted materials after the deletion of the portions which are restricted under this § 1275.50 or § 1275.52.

§ 1275.60 Requests for declassification.

Challenges to the classification and requests for the declassification of national security classified materials shall be governed by the provisions of 36 CFR part 1254 of this chapter, as that may be amended from time to time.

§ 1275.62 Reference room locations, hours, and rules.

The Archivist shall, from time to time, separately prescribe the precise location or locations where the materials shall be available for public reference, and the hours of operation and

rules governing the conduct of researchers using such facilities. This information may be obtained by writing to: Office of Presidential Libraries (NL), The National Archives, Washington, DC 20408.

§ 1275.64 Reproduction of tape recordings of Presidential conversations.

(a) To ensure the preservation of original tape recordings of conversations which were recorded or caused to be recorded by any officer or employee of the Federal Government and which:

(1) Involve former President Richard M. Nixon or other individuals who, at the time of the conversation, were employed by the Federal Government; and

(2) Were recorded in the White House or in the office of the President in the Executive Office Buildings located in Washington, DC; Camp David, MD; Key Biscayne, FL; or San Clemente, CA; and

(3) Were recorded during the period beginning January 20, 1969, and ending August 9, 1974, the Archivist will produce duplicate copies of such tape recordings in his custody for public and official reference use. The original tape recordings shall not be available for public access.

(b) Since the original tape recordings may contain information which is subject to restriction in accordance with § 1275.50 or § 1275.52, the archivists shall review the tapes and delete restricted portions from copies for public and official reference use.

(c) Researchers may listen to reference copies of the tape recordings described in paragraph (a) of this section in a National Archives building in the Washington, DC area and at other reference locations established by the Archivist in accordance with § 1275.62.

(d) The reproduction for members of the public of the reference copies of the available tape recordings described in paragraph (a) of this section will be permitted as follows: Copies of tape recordings will be made available following the public release of the tape segments contemplated in § 1275.42(a). Effective as of April 20, 2001, NARA will allow members of the public to obtain copies of all tapes that have been made available to the public by that date and that subsequently become available as they are released. Such copying will be controlled by NARA or its designated contractor. The fees for the reproduction of the tape recordings under this section shall be those prescribed in the schedule set forth in part 1258 of this chapter.

(e) The Archivist shall produce and maintain a master preservation copy of the original tape recordings for preservation purposes. The Archivist shall ensure that the master preservation copy, like the portions of the original tape recordings retained by the Archivist, does not contain those segments of the tape recordings which have been identified as private or personal and which have been transferred to the Nixon estate in accordance with § 1275.48.

[51 FR 7230, Feb. 28, 1986, as amended at 61 FR 17846, Apr. 23, 1996; 64 FR 56678, Oct. 21, 1999; 67 FR 44766, July 5, 2002]

§ 1275.66 Reproduction and authentication of other materials.

(a) Copying of materials, including tape recordings described in § 1275.64, may be done by NARA, by a contractor designated by NARA, or by researchers using self-service copiers or copying equipment.

(b) The Archivist may authenticate and attest copies of materials when necessary for the purpose of the research.

(c) The fees for reproduction and authentication of materials under this section shall be those prescribed in the schedule set forth in part 1258 of this chapter or pertinent successor regulation, as that schedule is amended from time to time.

[51 FR 7230, Feb. 28, 1986, as amended at 61 FR 17846, Apr. 23, 1996; 67 FR 44766, July 5, 2002]

§ 1275.68 Amendment of regulations.

The Archivist may from time to time amend the regulations of this subpart D in accordance with the applicable law concerning such amendments.

§ 1275.70 Freedom of information requests.

(a) The Archivist will process Freedom of Information Act requests for access to only those materials within the Presidential historical materials

which are identifiable by an archivist as records of an agency as defined in §1275.16(f). The Archivist will process these requests in accordance with the Freedom of Information regulations set forth in §1254.30 of this chapter or pertinent successor regulations.

(b) In order to allow NARA archivists to devote as much time and effort as possible to the processing of materials for general public access, the Archivist will not process those Freedom of Information requests where the requester can reasonably obtain the same materials through a request directed to an agency (as defined in §1275.16(f)), unless the requester demonstrates that he or she has unsuccessfully sought access from that agency or its successor in law or function.

[51 FR 7230, Feb. 28, 1986, as amended at 61 FR 17846, Apr. 23, 1996]

APPENDIX A TO PART 1275—SETTLEMENT AGREEMENT

Settlement Agreement filed April 12, 1996, in *Stanley I. Kutler and Public Citizen* v. *John W. Carlin, Archivist of the United States, and William E. Griffin and John H. Taylor, Co-executors of Richard M. Nixon's Estate, Civil Action No. 92–0662–NHJ (D.D.C.) (Johnson, J.).* By letter dated April 17, 2001, NARA and the Nixon estate agreed to waive paragraph 11 of this Settlement Agreement, such that the delay on public copying until January 1, 2003, of tapes not made publicly available before April 12, 1996, shall no longer apply. This change is reflected in 36 CFR 1275.64.

Settlement Agreement

This Settlement Agreement (''Agreement'') is made by and entered into among plaintiffs Stanley I. Kutler and Public Citizen; defendant/cross-claim defendant John W. Carlin, in his official capacity as Archivist of the United States; and defendant-intervenors/cross-claimants John H. Taylor and William E. Griffin, co-executors of the estate of Richard M. Nixon (''the Nixon estate''), in the above-entitled action by and through the parties' undersigned attorneys.

It is hereby agreed, by and among the parties, appearing through their undersigned attorneys, that this action is partially settled on the following terms:

TERMS OF AGREEMENT

1(a). As soon as practicable, the National Archives and Records Administration (''the Archives'') will publicly release the segments of tape recordings made during the Presidency of Richard M. Nixon (''tape recordings'' or ''tapes'') identified by the Archives as relating to ''abuses of governmental power,'' as defined by 36 CFR Part 1275, along with the corresponding portions of the tape log and any other finding aid. The date of that release, which is expected to be on or about November 15, 1996, shall be determined in the following manner.

(b). No later than April 15, 1996, the Archives shall deliver to an agent of the Nixon estate a copy of the approximately 201 hours of abuses of governmental power tape segments that it proposes to release, together with the corresponding portions of the tape log and any other finding aid, for review by the Nixon estate to determine whether it intends to object to the release. The Archives agrees to provide a period of orientation to the designated Nixon estate agent with respect to the review of the abuses of governmental power tape segments and to be available to respond to questions thereafter.

(c). In place of the right to make all other objections with respect to the tape recordings that the Archives has designated as abuses of governmental power materials, the Nixon estate agrees that it may object to their release only on the ground that such designation by the Archives is clearly inconsistent with the term ''abuses of governmental power'' as used in section 104(a)(1) of the Presidential Recordings and Materials Preservation Act of 1974 (''the Act''), 44 U.S.C. §2111 note, and defined in 36 CFR 1275.16(c), as qualified by 36 CFR 1275.50(b). Any such objection shall be in writing and may not be based on isolated instances of alleged failure by the Archives to apply the appropriate review standard, but only on a pattern of misapplication of the requirements of the Act and its implementing regulations. Further, any such objection must be accompanied by specific examples of alleged review errors and contain sufficient information to enable the review panel described in subparagraph 1(e) below to locate those examples readily. Nothing in this paragraph shall preclude the Nixon estate and the Archives from having informal discussions regarding the appropriate treatment of any of the abuses of governmental power tape segments.

(d). The Nixon estate shall have until October 1, 1996, to submit any objection in accordance with subparagraph 1(c) above. If no such objection is filed, the Archives shall proceed to issue a notice of proposed release pursuant to 36 CFR 1275.42 as soon as possible, but no later than October 15, 1996.

(e). If an objection is made, the matter shall be immediately referred to a panel of the following three Presidential Library archivists: David Alsobrook, Frances Seeber, and Claudia Anderson. If any of these three persons is unable to serve, the Archivist shall appoint a substitute who is acceptable to the other parties.

(f). The panel shall have such access to the tapes as it deems necessary to make its decision. The decision of the panel shall be either that the Nixon estate's objection is sustained or that it is rejected. The decision shall include a brief statement of the panel's reasons, but it need not include an item-by-item determination. In deciding whether the designation by the Archives of the material proposed to be released is clearly inconsistent with the definition of ''abuses of governmental power,'' the panel shall consider whether the release would seriously injure legitimate interests of identifiable individuals, whether the errors suggest a pattern of misinterpretation, and any other factor that bears on the issue of whether the Archives' designation of material as relating to abuses of governmental power was reasonable, considered as a whole. The decision of the panel shall be made within sixty (60) days of the date of the objection. However, if the panel determines that exceptional circumstances interfere with its ability to meet this deadline, the panel shall have up to an additional sixty (60) days to make its decision. The Archives shall notify the other parties of the need for an extension and briefly describe the reasons therefor. The panel's decision shall be final and binding on all parties, and no party may exercise any right to appeal to any person, board, or court that might otherwise be available. Nothing contained in this Agreement shall preclude the panel from advising the Archives of any particular processing errors that it believes may have been made, but the Archivist shall make the final determination as to whether to accept such advice.

(g). If the objection of the Nixon estate is sustained, the Archives shall re-review the tapes sufficiently to address the concerns raised by whatever aspect of the objection is sustained. At the conclusion of such re-review, the same process of review, first by the Nixon estate and then by the panel in the event of further objection, shall be repeated for those tape segments concerning the subject matter of the sustained objection prior to any release of tape recordings designated as relating to abuses of governmental power.

(h). The Nixon estate agrees to inform the Archives and plaintiffs whether it intends to file objections as soon as it has made its decision. If there is an objection by the Nixon estate and it is overruled, the FEDERAL REGISTER notice shall be published within ten (10) days of the date of the panel's decision.

(i). If, following the FEDERAL REGISTER notice, no objection by other individuals to a release is received within the time provided by law, the Archives shall release the tape recordings within ten (10) days after such time has expired. If objections are received, they shall be promptly considered by the Archives and shall be decided as soon thereafter as practical. Any materials as to which an objection to release has been timely filed shall not be released until such objection has been resolved pursuant to 36 CFR 1275.44. All materials not objected to shall be released no later than thirty (30) days after the time for objections has expired, provided that the Archives may withhold any additional conversation to which no objection has been made, pending final resolution of an objection to another conversation, if (i) such additional conversation is in close proximity on the tapes to the objected-to conversation and it would be burdensome for the Archives to separate out the releasable and objected-to portions, or (ii) the subjects of the releasable and the objected-to conversations are closely related to one another and the Archives determines that it might be misleading or might unfairly prejudice a living individual to release only one conversation. Any release under this Agreement shall include the corresponding portions of the tape log and any other finding aid.

(j). The Archives shall send to plaintiff Kutler, to arrive no later than the day that the release of the tapes occurs, a copy of the portions of the tape log and any other finding aid that correspond to the tapes being released. The Archives shall also make suitable arrangements for plaintiff Kutler to listen to such tapes on the date of their release, and/or on such other subsequent business days as plaintiff Kutler shall designate.

2(a). Although the Agreement provides that the Archives will identify and return to the Nixon estate a copy of any private or personal materials identified on the tapes, the parties have been unable to reach agreement regarding the Archivist's retention and maintenance of the original tape recordings in their entirety, including those segments deemed to be private or personal, along with a master preservation copy. The government's position is that it is complying with the Act by retaining the original tapes and a master preservation copy, including those portions containing private or personal conversations. The Nixon estate's position, with which plaintiffs agree, is that the family has statutory, constitutional, and other rights that prevent the Archives from retaining private or personal materials, on both the original tapes and all copies.

(b). The parties have agreed to litigate the issue described in subparagraph 2(a) above, including the validity of 36 CFR 1275.48(a) and 1275.64(e) as proposed for amendment. The parties further agree that the Court shall retain jurisdiction of that issue, as provided in paragraph 14 below, and that the right to litigate this issue includes the right to seek review in the United States Court of Appeals for the District of Columbia Circuit and the United States Supreme Court. If there is litigation between the Nixon estate and the Archivist over the issue described in subparagraph 2(a) above, the plaintiffs shall

support the Nixon estate in any such litigation by filing a brief supporting the estate's position in District Court. The parties agree to make all reasonable efforts to expedite resolution of this issue.

(c). This Agreement and all discussions, negotiations and exchanges of information leading to it shall be entirely without prejudice to any positions the parties may take in the event of such litigation. Nothing in this Agreement, in any discussions leading to it, or in any information or materials exchanged by the parties as part of the mediation may be relied on or disclosed by any party to support or rebut the position of any party with respect to the treatment of private or personal materials on the original tapes. Nothing in this subparagraph prevents any party from expressing its understanding as to the meaning and effect of the legal position of another party.

3. The Archives will provide to the Nixon estate any additional private or personal materials at approximately the time that the Archives proposes each segment identified in paragraphs 4 and 5 below for public release. Any additional copies of that material (other than on a master preservation copy, the status of which will be determined in accordance with the resolution of the issue as described in subparagraph 2(a) above), will be destroyed by appropriate method, with appropriate means of verification.

4(a). The second group of tapes to be processed for release is the approximately 278 hours recorded in the Cabinet Room. The projected date for publishing a notice of proposed opening of tapes in that group is August 1, 1997. The Archives will make the Cabinet Room tapes proposed for release available to the Nixon estate in no fewer than four (4) segments. The process by which those tapes will be reviewed by the Nixon estate, and the objections handled by the Archives, is set forth in the following subparagraphs of this paragraph 4.

(b). The Nixon estate agrees to review each segment as it is received and promptly to call to the attention of the Archives any concerns that it may have. The Archives and the Nixon estate agree to attempt to work out their differences informally in order to minimize any objections to a proposed release. To facilitate informal consultation between the Nixon estate and the Archives concerning the tape review, the Archivist shall designate a panel member identified in subparagraph 1(e) above who will serve as a contact with the Nixon estate and assure access to information relating to Presidential libraries practices and procedures that may arise in the course of the tape review. The designated individual will be responsible for assuring that the Nixon estate has access to the appropriate person to answer its concerns. The Nixon estate may communicate with the designated individual orally or in writing. If the Archives agrees with the Nixon estate that any portion of a segment that has been sent to the Nixon estate as a proposed release should not be released, the Archives shall assure that there is appropriate documentation to reflect that change.

(c). The Nixon estate will have a period of at least six (6) months in which to review all of the Cabinet Room tapes, beginning on the date the Archives makes the first installment of such tapes available to the estate for review (but in no event will the six (6) months begin earlier than November 15, 1996). During the review of the Cabinet Room tapes, the Nixon estate will employ an agent or agents who will spend an average of at least thirty two (32) hours a week (total) in actual review of the tapes. The Nixon estate may request from the Archives an extension of the six-month review period, which the Archives shall grant if good cause is shown.

(d). If, during its review, the Nixon estate becomes aware that there are materials proposed for release that it believes should not be heard even by individuals on the registry list, it will promptly advise the Archives of any such materials so that they can be reviewed and/or segregated by the Archives before any other individual is permitted to listen to them. The Nixon estate will cooperate with the Archives so that the required FEDERAL REGISTER notice is published as soon as possible, but in no event shall such notice be provided later than ten (10) days after the time the Nixon estate completes its review. Final objections from the Nixon estate to the release of portions of the tapes shall be filed in accordance with 36 CFR Part 1275 no later than the date for filing objections by other persons. Thereafter, subject to paragraph 7 below, the provisions of subparagraphs 1(i) and 1(j) above will apply.

5(a). The remaining tapes, consisting of approximately 2338 hours, shall be processed for release in five (5) segments. Because the precise number of hours of tapes for each month cannot readily be determined, the parties have agreed to divide the releases into the segments set forth below. The Archives will begin processing (which includes, but is not limited to, tape review, preparing tapes for declassification review, tape editing and production of finding aids) each segment before processing of the preceding segment is concluded. Processing of the tapes in each segment is projected to take from about fifteen (15) to about twenty three (23) months. The approximate number of hours of tapes to be reviewed in each segment is set forth in parentheses in the following listing of the segments. The projected number of months between the completion of the Archives' processing of the immediately preceding segment and the completion of the Archives' processing of each listed segment is set forth in brackets.

1. February 1971–July 1971 (437 hours) [8 months]
2. August 1971–December 1971 (405 hours) [7 months]
3. January 1972–June 1972 (440 hours) [7 months]
4. July 1972–October 1972 (410 hours) [6 months]
5. November 1972–July 1973 (646 hours) [10 months]

(b). The time estimates in this Agreement are not enforceable as such, but the parties agree to have the Court retain jurisdiction to consider requests that it enter a binding order setting a schedule for the Archives to complete the processing of the tapes. No party may seek such an order unless that party first provides twenty (20) days' written notice to the other parties of that party's intention to seek such an order. Further, no party may seek such an order except on the ground that the Archives has unreasonably failed to meet the estimates contained herein by a substantial amount. The type of proof that will demonstrate reasonableness on the part of the Archives in this regard may include, but will not necessarily be limited to, a showing that the Archives is reasonably allocating its resources among its various programs and activities in the event that it experiences a shortage of resources, including any occasioned by court order.

(c). Portions of each segment processed by the Archives shall be provided to the Nixon estate when the processing of each month of tape recorded material is completed, unless there are a very few hours for two (2) or more months, which may then be combined into a single unit. During its review of the chronological tape segments, the Nixon estate will employ an agent or agents who will spend an average of at least thirty two (32) hours a week (total) in actual review of the tapes, forty eight (48) weeks of the year. As its review of the tapes proceeds, the Nixon estate shall provide a written report of its progress to the Archives and the plaintiffs on a bimonthly basis. The report shall include the number of hours worked in each week, the number of hours of tapes reviewed in each week, and the Nixon estate's projected completion date for review of the segment currently under review. The provisions of subparagraphs 4(b) and 4(d) above shall apply to the review, objections, and releases with respect to the chronological tape segments, subject to paragraph 7 below.

(d). If one of the other parties to this Agreement determines that the Nixon estate's review is not being conducted diligently or in good faith, or that the estate's estimated completion date(s) of one or more segments is unreasonable, that party may petition the Archivist to establish an earlier date(s) for the completion of the review of that segment and/or of future segments. Any such date(s) established by the Archivist shall provide the Nixon estate with a reasonable opportunity to protect and assert its interests without unduly delaying the release of the tapes, and shall be based upon consideration of the progress of the Archives' review and its scheduled completion date(s); the progress to date of the estate's review; and the time reasonably necessary to complete the estate's review and to formulate and present any objections. The Archives may also propose earlier dates for the completion of the review by the Nixon estate on the basis provided for in this subparagraph. If a proposal for an earlier date is made, the Nixon estate will have a reasonable opportunity to respond.

6. Once the Archives has completed processing the approximately 2338 hours of tapes discussed in paragraph 5 above, and has made corresponding releases, the Archives shall identify any additional copies of partial tape segments in its possession. If the Archives determines that some or all of such additional partial tape segments are duplicative of any tape recordings that it has already processed, the Archives may dispose of the duplicative tape segments, following notification to the parties, subject to paragraph 3 above. To the extent that such partial tape segments are not duplicative of the tape recordings already processed, the Archives shall promptly process such non-duplicative portions and shall treat any portions determined to be private or personal consistently with the resolution of the issue to be litigated as described in paragraph 2 above.

7(a). After completion of the procedures described in paragraph 4 above, the Cabinet Room tapes that are found to be releasable under paragraph 4 above may be released if either there has been a final decision by the district court on the issue to be litigated as described in subparagraph 2(a) above, or the release is scheduled after April 1, 1998, whichever of these two events happens sooner.

(b). After completion of the procedures described in paragraph 5 above, the tapes described in paragraph 5(a) above that are found to be releasable may be released if either there has been a final judgment by the district court, which is not subject to further review by appeal or certiorari, with regard to the issue to be litigated as described in subparagraph 2(a) above, or there has been a final decision by the United States Court of Appeals for the District of Columbia Circuit on this issue, or the release is scheduled to take place after November 1, 1999, whichever of these three events happens sooner.

(c). As used in subparagraphs 7(a) and (b) above, the term ''final decision'' means a decision not subject to reconsideration under Rule 59 of the Federal Rules of Civil Procedure, or Rules 35 or 40 of the Federal Rules of Appellate Procedure, respectively.

8. The Nixon estate may, at any time, elect to use the procedures in paragraph 1 above with respect to any tape segment in place of the provisions of paragraphs 4(b) and (d) and 5(c) above, with the following substitution: The standard under which objections shall be made, and under which the panel shall decide their merits, is whether the release taken as a whole is plainly inconsistent with the requirements of the Act and its implementing regulations. Provided, however, that once the Nixon estate elects to use the procedures in paragraph 1 above in place of the provisions in paragraphs 4(b) and (d) and 5(c) above, it cannot subsequently revert back to the formal objection process set forth in 36 CFR Part 1275 for that tape segment.

9. Within thirty (30) days of the Court's entry of an order as described in paragraph 14 below, the Archivist shall designate a particular person who shall be responsible for responding to reasonable inquiries from the plaintiffs on the status of the releases and objections. Such designation may be changed at any time at the Archivist's discretion by a notice to plaintiffs through their counsel.

10. If the Archives appoints a Senior Archival Panel as defined in 36 CFR 1275.46(d) and (e), no party to the Agreement may object to the appointment of such a panel on the ground that the suggestion to appoint such a panel was originated by an individual other than the processing archivists assigned to the Archives' Nixon Presidential Materials Staff.

11. The Archives will allow members of the public to obtain copies of publicly accessible portions of the tapes after the releases described in paragraph 5 above, are completed; provided, however, that if the releases described in paragraph 5 above are not completed by December 31, 1999, the Archives will allow members of the public to obtain copies only of the abuses of governmental power tapes, together with any other tapes publicly released as of the date of the filing of this Agreement with the Court, beginning January 1, 2000. Further provided, that if the releases described in paragraph 5 above are not completed by December 31, 2002, the Archives will, beginning January 1, 2003, allow members of the public to obtain copies of all tapes that have been made available to the public by that date and tapes that subsequently become available, as they are released.

12(a). Promptly after the Court enters the Order provided for in paragraph 14 below, plaintiff Kutler will withdraw his request under the Freedom of Information Act, 5 U.S.C. 552, for any and all tape logs and other finding aids, which is pending in *Kutler* v. *Carlin, et al.*, Civ. A. No. 92–0661–NHJ (D.D.C.). In all other respects, plaintiff Kutler's request in that action shall be unaffected by this Agreement.

(b). Nothing in this Agreement shall affect the processing by the Archives of any dictabelts, which are a collection of recordings of former President Nixon and other White House staff members dictating memoranda, correspondence and speech drafts, that are included in the materials that are subject to the Act.

13. Pursuant to Rule 315 of this Court, the plaintiffs and the defendant shall attempt to resolve the plaintiffs' claim for attorneys' fees and expenses and shall advise the Court no later than forty-five (45) days after this Court has entered the Order provided for in paragraph 14 below on whether they have been able to resolve the issue of attorneys' fees and expenses. If no resolution has been reached, they will, at that time, recommend a schedule to the Court to resolve such claim.

14. The parties agree to the dissolution of the preliminary injunction entered on August 9, 1993, and dismissal with prejudice of this action, including all claims and cross-claims, except for the issue to be litigated as described in subparagraph 2(a) above, and any fees and expenses claimed pursuant to paragraph 13 above, by filing the attached Joint Motion to Vacate Preliminary Injunction and to Dismiss Claims, and the attached Consent Order. The parties agree that the Court shall retain jurisdiction to: (a) Consider the entry of an order in accordance with the terms of paragraph 5 above; (b) resolve the issue to be litigated as described in subparagraph 2(a) above; (c) determine any fees and expenses claimed pursuant to paragraph 13 above; and (d) for the purpose of enforcing the terms of this Agreement. The parties further agree that such jurisdiction, except with respect to the issue described in paragraph 2 above, will be retained only until the later of the implementation of paragraph 11 above or the completion of the releases called for in paragraph 5 above. Plaintiffs and the Nixon estate further agree that they will not challenge any regulations issued by the Archives which implement and are consistent with this Agreement.

15. The terms of this Agreement may not be altered except with the written consent of the parties. Nothing in this Agreement constitutes an admission of liability or wrongdoing on the part of any party.

Executed this 12th day of April, 1996.

For Plaintiffs Stanley I. Kutler and Public Citizen:

Alan B. Morrison,

(*D.C. Bar No. 073114*), Public Citizen Litigation Group, 1600 20th Street NW., Washington, DC 20009, (202) 588–1000.

For Defendant John W. Carlin:

Anne L. Weismann,

(*D.C. Bar No. 298190*)

Judry L. Subar,

(*D.C. Bar No. 347518*)

Alina S. Kofsky,

(*D.C. Bar No. 419093*), Department of Justice, Federal Programs Branch, Civil Division, 901 E Street NW., Room 1010, Washington, DC 20530, (202) 514–4523.

For Defendant-Intervenors John H. Taylor and William E. Griffin:

Herbert J. Miller,

(*D.C. Bar No. 026120*)

R. Stan Mortenson,

(*D.C. Bar No. 114678*)

Scott L. Nelson,

(*D.C. Bar No. 413548*)

Ellen Fels Berkman,

(*D.C. Bar No. 433310*)

Miller, Cassidy, Larroca & Lewin,

2555 M Street, NW., Washington, DC 20037, (202) 293–6400.

[61 FR 17846, Apr. 23, 1996, as amended at 67 FR 44766, July 5, 2002]

SUBCHAPTER G—NARA FACILITIES

PART 1280—USE OF NARA FACILITIES

Subpart A—What Are the General Rules of Conduct on NARA Property?

General Information on Using NARA Facilities

Sec.
1280.1 What is the purpose of this part?
1280.2 What property is under the control of the Archivist of the United States?
1280.4 Can children under the age of 14 use NARA facilities?
1280.6 May I bring a seeing-eye dog or other assistance animal?
1280.8 Will my belongings be searched?
1280.10 Are there special rules for driving on NARA property?
1280.12 Is parking available?
1280.14 May I use the shuttle bus to travel to the National Archives at College Park or to the National Archives Building in Washington, DC?
1280.16 Are there additional rules posted?

Prohibited Activities

1280.18 May I bring guns or other weapons onto NARA property?
1280.20 What is your policy on illegal drugs and alcohol?
1280.22 Is gambling allowed on NARA property?
1280.24 Is smoking allowed on NARA property?
1280.26 May I pass out fliers on NARA property?
1280.28 Where can I eat and drink on NARA property?
1280.30 Are soliciting, vending, and debt collection allowed on NARA property?
1280.32 What other behavior is not permitted?
1280.34 What are the types of corrective action NARA imposes for prohibited behavior?
1280.36 May I file an appeal if I am banned from NARA facilities?

Subpart B—What Are the Rules for Filming, Photographing, or Videotaping on NARA Property?

1280.40 Definitions.
1280.42 When do the rules in this subpart apply?
1280.44 May I film, photograph, or videotape on NARA property for commercial purposes?
1280.46 What are the rules for filming, photographing, or videotaping on NARA property for personal use?
1280.48 How do I apply to film, photograph, or videotape on NARA property for news purposes?
1280.50 What will I be allowed to film, photograph, or videotape for news purposes?
1280.52 What are the rules for filming, photographing, or videotaping on NARA property for news purposes?

Subpart C—What Are the Additional Rules for Using NARA Facilities in the Washington, DC, Area?

1280.60 Where do I enter the National Archives Building in Washington, DC?
1280.62 When are the exhibit areas in the National Archives Building open?
1280.64 What entrance should I use to enter the National Archives at College Park?
1280.66 May I use the National Archives Library?
1280.68 May I use the cafeteria at the National Archives at College Park?

Subpart D—What Rules Apply to Use NARA Public Areas in the Washington, DC, Area?

1280.70 When does NARA allow non-NARA groups to use the public areas of NARA property?
1280.71 What are the general rules for using NARA property in the Washington, DC, area?
1280.72 What additional rules apply for a NARA approved event?
1280.74 What spaces in the National Archives Building are available for use by non-NARA groups and organizations?
1280.76 When are the public areas available for private events in the National Archives Building?
1280.78 Does NARA charge fees for the use of public areas in the National Archives Building?
1280.80 How do I request to use NARA public areas in the National Archives Building?
1280.82 How will NARA handle my request to use public areas in the National Archives Building?
1280.84 May I ask to use the Rotunda?
1280.85 What space in the National Archives at College Park is available for use by non-NARA groups and organizations?
1280.86 When are the public areas available for events in the National Archives at College Park?
1280.87 Does NARA charge fees for the use of public areas in the National Archives at College Park?
1280.88 How do I request to use NARA public areas in the National Archives at College Park?

1280.89 How will NARA handle my request to use public areas in the National Archives at College Park?

Subpart E—What Additional Rules Apply for Use of Facilities in Presidential Libraries?

1280.90 What are the rules of conduct while visiting the Presidential libraries?
1280.92 When are the Presidential library museums open to the public?
1280.94 When do Presidential libraries allow other groups to use their public areas for events?
1280.96 Supplemental rules.

Subpart F—What Additional Rules Apply for Use of Public Areas at Regional Records Services Facilities?

1280.100 What are the rules of conduct at NARA regional records services facilities?
1280.102 When do NARA regional records services facilities allow other groups to use their public areas for events?

AUTHORITY: 44 U.S.C. 2102 notes, 2104(a), 2112, 2903

SOURCE: 65 FR 34978, June 1, 2000, unless otherwise noted.

Subpart A—What Are the General Rules of Conduct on NARA Property?

GENERAL INFORMATION ON USING NARA FACILITIES

§ 1280.1 What is the purpose of this part?

(a) This part tells you what rules you must follow when you use property under the control of the Archivist of the United States (see § 1280.2 of this part).

(b) When you are using other NARA facilities, the General Services Administration (GSA) regulations, Conduct on Federal Property, at 41 CFR part 102–74, Subpart C, apply to you. These facilities are the NARA regional records services facilities, the Washington National Records Center in Suitland, MD, the National Personnel Records Center in St. Louis, MO, and the Office of the Federal Register in Washington, DC. The rules in §§ 1280.32(l), 1280.34 (a)(1) and (a)(2), and 1280.36 also apply to you. The rules in Subpart B of this part also apply to you if you wish to film, take photographs, or make videotapes. The rules in Subpart F of this part also apply to you if you wish to use the NARA-assigned conference rooms in those facilities.

(c) If you are using records in a NARA research room in a NARA facility, you must also follow the rules in 36 CFR part 1254. If you violate a rule or regulation in 36 CFR part 1254, you are subject to the types of corrective action set forth in that part, including revocation of research privileges.

(d) If you violate a rule or regulation in this part you are subject to, among other types of corrective action, removal and banning from the facility.

[65 FR 34978, June 1, 2000, as amended at 68 FR 53882, Sept. 15, 2003, 73 FR 36793, June 30, 2008]

§ 1280.2 What property is under the control of the Archivist of the United States?

The following property is under the control of the Archivist of the United States and is defined as ''NARA property'' in this part 1280:

(a) *The National Archives Building*. Property under the control of the Archivist includes:

(1) The Pennsylvania Avenue, NW, entrance between 7th and 9th Streets including the area within the retaining walls on either side of the entrance, inclusive of the statues, and the steps and ramps leading up to the entrance of the building;

(2) On the 7th Street, 9th Street, and Constitution Avenue, NW, sides of the building, all property between the National Archives Building and the curb line of the street, including the sidewalks and other grounds, the steps leading up to the Constitution Avenue entrance, the Constitution Avenue entrance, and the portico area between the steps and the Constitution Avenue entrance.

(3) The National Park Service controls the areas on the Pennsylvania Avenue side of the National Archives Building that are not under the control of the Archivist of the United States.

(b) *The National Archives at College Park*. Property under control of the Archivist includes approximately 37 acres bounded:

(1) On the west by Adelphi Road;

(2) On the north by the Potomac Electric Power Company right-of-way;

(3) On the east by Metzerott Road; and

(4) On the south by the University of Maryland.

(c) *The Presidential Libraries*. Property under control of the Archivist includes the Presidential Libraries and Museums that are listed in 36 CFR 1253.3.

(d) *The National Archives at Atlanta*. The National Archives at Atlanta in Morrow, Georgia, as specified in 36 CFR 1253.7(d).

(e) *The Federal Records Centers*. The Federal Records Centers in Ellenwood, Georgia, and Riverside, California, as specified in 36 CFR 1253.6 (d) and (l), respectively.

(f) *Additional Facilities*. As other properties come under the control of the Archivist of the United States, they will be listed in these regulations as soon as practicable.

[65 FR 34978, June 1, 2000, as amended at 71 FR 76166, Dec. 20, 2006; 72 FR 4432, Jan. 31, 2007; 75 FR 19557, Apr. 15, 2010]

§ 1280.4 What items are subject to inspection by NARA?

NARA may, at its discretion, inspect the personal property in the possession of any NARA contractor, employee, student intern, visitor, volunteer, or other person arriving on, working at, visiting, or departing from NARA property.

[71 FR 76167, Dec. 20, 2006]

§ 1280.6 Can children under the age of 14 use NARA facilities?

Children under the age of 14 will be admitted to NARA facilities only if they are accompanied by an adult who will supervise them at all times while on NARA property. The director of a NARA facility may authorize a lower age limit for admission of unaccompanied children to meet special circumstances (e.g., students who have been given permission to conduct research without adult supervision).

[65 FR 34978, June 1, 2000. Redesignated at 71 FR 76167, Dec. 20, 2006]

§ 1280.8 May I bring a seeing-eye dog or other assistance animal?

Yes, persons with disabilities may bring guide dogs or other animals used for guidance and assistance onto NARA property. You may not bring any other animals into a NARA facility except for official purposes.

[65 FR 34978, June 1, 2000. Redesignated at 71 FR 76167, Dec. 20, 2006]

§ 1280.10 Are there special rules for driving on NARA property?

(a) You must obey speed limits, posted signs, and other traffic laws, and park only in designated spaces.

(b) NARA will tow, at the owner's expense, any vehicle that is parked illegally. Except in emergencies, you may not park in spaces reserved for holders of NARA parking permits. If an emergency forces you to leave your vehicle in an illegal area, you must notify the security guards at that NARA facility as soon as possible. We will not tow your illegally parked car if you have notified a security guard of an emergency unless it is creating a hazard or blocking an entrance or an exit.

(c) We may deny any vehicle access to NARA property for public safety or security reasons.

§ 1280.12 Is parking available?

(a) *The National Archives Building*. There is no parking available for researchers or visitors to the National Archives Building. However, this building is easily accessible by bus or subway and there are several commercial parking lots located near the building.

(b) *The National Archives at College Park*. The National Archives at College Park has limited public parking space. The garage is open to the public on a first-come, first-served basis during the hours the research rooms are open. There is public bus service to this building. Individuals and groups visiting the National Archives at College Park are encouraged to use public transportation or car pool to get to the building as the parking lot is often full during our busiest hours.

(c) *Records services facilities*. Most records services facilities have onsite parking available for researchers. Parking at these facilities and at the

Washington National Records Center is governed by GSA regulations, Management of Buildings and Grounds, found at 41 CFR part 101–20. The National Archives at Philadelphia on Market Street (in Philadelphia) and the National Archives at New York City do not have onsite parking. However, there is ample parking in commercial parking garages near these facilities.

(d) *Presidential Libraries.* All of the Presidential Libraries have onsite parking for researchers and museum visitors. Some of the spaces are reserved for staff and for security reasons.

[65 FR 34978, June 1, 2000, as amended at 75 FR 19558, Apr. 15, 2010]

§ 1280.14 May I use the shuttle bus to travel to the National Archives at College Park or to the National Archives Building in Washington, DC?

The NARA shuttle, which travels concurrently each hour between the National Archives Building and the National Archives at College Park, is intended for NARA employees' use for official purposes. Other Government employees on official business or researchers may also use the shuttle if space is available. The shuttle operates Monday through Friday, excluding Federal holidays, 8:00 a.m. to 5:00 p.m.

[65 FR 34978, June 1, 2000; 65 FR 35840, June 6, 2000]

§ 1280.16 Are there additional rules posted?

Yes, there are additional rules posted on NARA property. You must, at all times while on NARA property, comply with official NARA signs and with the directions of the guards and NARA staff.

PROHIBITED ACTIVITIES

§ 1280.18 May I bring guns or other weapons onto NARA property?

No, you may not bring firearms or other dangerous or deadly weapons either openly or concealed onto NARA property except for official business. You also may not bring explosives, or items intended to be used to fabricate an explosive or incendiary device, onto NARA property. State-issued concealed-carry permits are not valid on NARA property.

§ 1280.20 What is your policy on illegal drugs and alcohol?

You may not use or be in possession of illegal drugs on NARA property. You also may not enter NARA property while under the influence of illegal drugs or alcohol. Using alcoholic beverages on NARA property is prohibited except for occasions when the Archivist of the United States or his/her designee has granted an exemption in writing.

§ 1280.22 Is gambling allowed on NARA property?

(a) No, you may not participate in any type of gambling while on NARA property. This includes:

(1) Participating in games for money or other personal property;

(2) Operating gambling devices;

(3) Conducting a lottery or pool; or

(4) Selling or purchasing numbers tickets.

(b) This rule does not apply to licensed blind operators of vending facilities who are selling chances for any lottery set forth in a State law and conducted by an agency of a State as authorized by section 2(a)(5) of the Randolph-Sheppard Act (20 U.S.C. 107, *et seq.*)

§ 1280.24 Is smoking allowed on NARA property?

Smoking is not allowed inside any NARA facility.

§ 1280.26 May I pass out fliers on NARA property?

No, you may not distribute or post handbills, fliers, pamphlets or other materials on bulletin boards or elsewhere on NARA property, except in those spaces designated by NARA as public forums. This prohibition does not apply to displays or notices distributed as part of authorized Government activities or bulletin boards used by employees to post personal notices.

§ 1280.28 Where can I eat and drink on NARA property?

You may only eat and drink in designated areas in NARA facilities. Eating and drinking is prohibited in the

research, records storage, and museum areas unless specifically authorized by the Archivist or designee.

§ 1280.30 Are soliciting, vending, and debt collection allowed on NARA property?

(a) No, on NARA property you may not:

(1) Solicit for personal, charitable, or commercial causes;

(2) Sell any products;

(3) Display or distribute commercial advertising; or

(4) Collect private debts.

(b) If you are a NARA employee or contractor, you may participate in national or local drives for funds for welfare, health or other purposes that are authorized by the Office of Personnel Management and/or approved by NARA (e.g. the Combined Federal Campaign). Also, nothing in this section prohibits employees from activities permitted under the Standards of Ethical Conduct and Office of Government Ethics rules.

§ 1280.32 What other behavior is not permitted?

We reserve the right to remove anyone from NARA property who is:

(a) Stealing NARA property;

(b) Willfully damaging or destroying NARA property;

(c) Creating any hazard to persons or things;

(d) Throwing anything from or at a NARA building;

(e) Improperly disposing of rubbish.

(f) Acting in a disorderly fashion;

(g) Acting in a manner that creates a loud or unusual noise or a nuisance;

(h) Acting in a manner that unreasonably obstructs the usual use of NARA facilities:

(i) Acting in a manner that otherwise impedes or disrupts the performance of official duties by Government and contract employees;

(j) Acting in a manner that prevents the general public from obtaining NARA-provided services in a timely manner; or

(k) Loitering.

(l) Threatening directly (e.g., in-person communications or physical gestures) or indirectly (e.g., via regular mail, electronic mail, or phone) any NARA employee, visitor, volunteer, contractor, other building occupants, or property.

[65 FR 34978, June 1, 2000, as amended at 68 FR 53882, Sept. 15, 2003]

§ 1280.34 What are the types of corrective action NARA imposes for prohibited behavior?

(a) Individuals who violate the provisions of this part are subject to:

(1) Removal from the premises (removal for up to seven calendar days) and possible law enforcement notification;

(2) Banning from property owned or operated by NARA;

(3) Arrest for trespass; and

(4) Any additional types of corrective action prescribed by law.

(b) The regional administrator of the facility (or the director if so designated) has the authority to have the individual immediately removed and denied further access to the premises for up to seven calendar days. During this removal period, the Assistant Archivist for Administration renders a decision on whether the individual should be banned from specific or all NARA facilities permanently or temporarily (in up to one-year increments). Long-term banning under this part includes automatic revocation of research privileges, notwithstanding the time periods set forth in 36 CFR 1254.48 . Research privileges remain revoked until the ban is lifted, at which time an application for new privileges may be submitted.

(c) Upon written notification by the Assistant Archivist for Administration, individuals may be banned from all NARA facilities. All NARA facilities will be notified of the banning of individuals.

[68 FR 53882, Sept. 15, 2003, as amended at 73 FR 36793, June 30, 2008]

§ 1280.36 May I file an appeal if I am banned from NARA facilities?

Yes, within 30 calendar days of receiving such notification, an individual may appeal the decision in writing. In the request, the individual must state the reasons for the appeal and mail it to the Deputy Archivist of the United

States for reconsideration (address: National Archives and Records Administration (ND), 8601 Adelphi Road, College Park, MD 20740–6001). The Deputy Archivist has 30 calendar days from receipt of an appeal to make a decision to rescind, modify, or uphold the ban. If the ban is upheld, further requests by the affected individual will not be acted upon if received prior to the expiration of a period of one year from the date of the last request for reconsideration. After one year has passed, a further request for reconsideration will be considered, and the Deputy Archivist will decide, within 30 calendar days of receiving the request, whether the ban remains in place or is rescinded. Notice of the decision will be provided in writing to the affected individual.

[68 FR 53882, Sept. 15, 2003]

Subpart B—What Are the Rules for Filming, Photographing, or Videotaping on NARA Property?

§ 1280.40 Definitions.

(a) *Filming, photographing, or videotaping for commercial purposes.* Any filming, photographing, or videotaping to promote commercial enterprises or commodities.

(b) *News filming, photographing, or videotaping.* Any filming, photographing, or videotaping done by a commercial or non-profit news organization that is intended for use in a television or radio news broadcast, newspaper, or periodical.

(c) *Personal use filming, photographing, or videotaping.* Any filming, photographing, or videotaping intended solely for personal use that will not be commercially distributed.

§ 1280.42 When do the rules in this subpart apply?

(a) These rules apply to anyone who is filming, photographing, or videotaping inside any NARA-run facility and while on NARA property.

(b) Filming, photographing, and videotaping on the grounds of any NARA regional records services facility, or on the grounds surrounding the Washington National Records Center are governed by GSA regulations, Management of Buildings and Grounds, found at 41 CFR part 101–20, and must be approved by a GSA official.

§ 1280.44 May I film, photograph, or videotape on NARA property for commercial purposes?

No, filming, photographing, and videotaping on NARA property for commercial purposes is prohibited.

§ 1280.46 What are the rules for filming, photographing, or videotaping on NARA property for personal use?

(a) You may film, photograph, or videotape outside a NARA facility so long as you do not impede vehicular or pedestrian traffic.

(b) You may film, photograph, or videotape inside a NARA facility during regular business hours in public areas, including research rooms and exhibition areas, under the following conditions:

(1) You may not use a flash or other supplemental lighting; and

(2) You may not use a tripod or similar equipment.

(c) You may not film, photograph, or videotape in any of the exhibit areas of the National Archives Building in Washington, DC, including the Rotunda where the Declaration of Independence, the Constitution, and the Bill of Rights are displayed.

[65 FR 34978, June 1, 2000, as amended at 73 FR 36793, June 30, 2008; 75 FR 3863, Jan. 25, 2010]

§ 1280.48 How do I apply to film, photograph, or videotape on NARA property for news purposes?

(a) If you wish to film, photograph, or videotape for news purposes at the National Archives Building (as delineated in § 1280.2(a)), the National Archives at College Park, or the Washington National Records Center, you must request permission from the NARA Public Affairs Officer, 700 Pennsylvania Avenue, NW., Washington, DC 20408–0001. See also § 1280.42(b) for additional permissions relating to the Washington National Records Center.

(b) If you wish to film, photograph, or videotape for news purposes at a Presidential library or at a regional records services facility, you must contact the director of the library (see 36

CFR 1253.3 for contact information) or regional records services facility (see 36 CFR 1253.6 for contact information) to request permission.

(c) Your request for permission to film, photograph, or videotape for news purposes must contain the following information:

(1) The name of the organization you are working for;

(2) Areas you wish to film, photograph, or videotape;

(3) Documents, if any, you wish to film;

(4) The purpose of the project you are working on;

(5) What you intend to do with the film, photograph, or videotape; and

(6) How long you will need to complete your work on NARA property.

(d) You must request permission at least one week in advance of your desired filming date. If you make a request within a shorter time period, we may not be able to accommodate your request.

(e) OMB control number 3095–0040 has been assigned to the information collection contained in this section.

(f) This section does not apply to you if you have permission to use your own microfilming equipment to film archival records and donated historical materials under the provisions of 36 CFR 1254.90 through 1254.110. You must follow the procedures in 36 CFR part 1254 for permission to film archival records and donated materials for research purposes or for microfilm publications.

[65 FR 34978, June 1, 2000, as amended at 36793, June 30, 2008]

§ 1280.50 What will I be allowed to film, photograph, or videotape for news purposes?

(a) NARA will permit you to film, photograph, or videotape sections of the interior or exterior of any NARA facility only for stories about:

(1) NARA programs;

(2) NARA exhibits;

(3) NARA holdings;

(4) NARA services;

(5) A former President;

(6) A researcher who has made or is making use of NARA holdings (provided that the researcher also approves your request); or

(7) Any other NARA-related activity approved by the appropriate NARA representative.

(b) NARA reserves the right to reject any request that does not meet the criteria set forth in 36 CFR 1280.50(a) and (c) or because of scheduling or staffing constraints.

(c) We will not grant you permission to film, photograph, or videotape if you intend to use the film, photographs, or videotape for commercial, partisan political, sectarian, or similar activities.

§ 1280.52 What are the rules for filming, photographing, or videotaping on NARA property for news purposes?

The following conditions and restrictions apply to anyone that has been granted permission to film, photograph, or videotape for news purposes under Subpart B:

(a) NARA may limit or prohibit use of artificial light in connection with the filming, photographing, or videotaping of documents for news purposes. You may not use any supplemental lighting devices while filming, photographing, or videotaping inside a NARA facility in the Washington, DC, area without the prior permission of the NARA Public Affairs Officer. If the Public Affairs Officer approves your use of artificial lighting in the Rotunda, NARA will use facsimiles in place of the Declaration of Independence, the Constitution, and the Bill of Rights. If NARA approves your use of high intensity lighting, NARA will cover or replace with facsimiles all other exhibited documents that fall within the boundaries of such illumination. You may not use any supplemental lighting devices at the Presidential Libraries and the regional records services facilities without permission from a NARA representative at that facility.

(b) On a case-by-case basis, the Public Affairs Officer or other appropriate NARA representative may grant you permission to film, photograph, or videotape in stack areas containing unclassified records.

(c) While filming, photographing, or videotaping, you are liable for injuries to people or property that result from your activities on NARA property.

(d) At all times while on NARA property, you must conduct your activities in accordance with all applicable NARA regulations contained in this part.

(e) Your filming, photographing, or videotaping activity may not impede people who are entering or exiting any NARA facility unless otherwise authorized by the facility's director, or by the NARA Public Affairs Officer for Washington, DC, area facilities.

(f) You must be accompanied by a NARA staff member when filming, photographing, or videotaping the interior of any NARA facility.

(g) NARA will approve your request to do press interviews of NARA personnel on NARA property only when such employees are being interviewed in connection with official business. Interviews with NARA staff and researchers may take place only in areas designated by the NARA Public Affairs Officer for Washington, DC, area facilities, or by the appropriate NARA representative at other NARA facilities.

(h) You may film and photograph documents only in those areas which the NARA Public Affairs Staff designates in the National Archives Building, the National Archives at College Park, or the Washington National Records Center or in those areas designated as appropriate by the staff liaison at other NARA facilities.

(i) We will limit your film and photography sessions to two hours.

(j) You may not state or imply that NARA approves of or will sponsor:

(1) Your activities or views; or

(2) The uses to which you put images depicting any NARA facility.

[65 FR 34978, June 1, 2000, as amended at 73 FR 36794, June 30, 2008]

Subpart C—What Are the Additional Rules for Using NARA Facilities in the Washington, DC, Area?

§ 1280.60 Where do I enter the National Archives Building in Washington, DC?

(a) To conduct research or official business, you must enter the Pennsylvania Avenue entrance of the National Archives Building.

(b) To visit the exhibit areas of the National Archives Building, including the National Archives Experience and Rotunda, you must enter through the Constitution Avenue entrance.

[65 FR 34978, June 1, 2000, as amended at 71 FR 42060, July 25, 2006]

§ 1280.62 When are the exhibit areas in the National Archives Building open?

(a) The exhibit areas' hours of operation are posted at *http://www.archives.gov*. Last admission to the exhibit areas of the building will be no later than 30 minutes before the stated closing hour. The Archivist of the United States reserves the authority to close the exhibit areas to the public at any time for special events or other purposes. The building is closed on Thanksgiving and December 25.

[75 FR 71547, Nov. 24, 2010]

§ 1280.64 What entrance should I use to enter the National Archives at College Park?

You may enter the National Archives at College Park facility only through the main entrance on Adelphi Road. This entrance will be open to visitors during normal business hours described in 36 CFR 1253.2. Commercial deliveries must be made at the loading dock which is accessible only from Metzerott Road.

§ 1280.66 May I use the National Archives Library?

The National Archives Library facilities in the National Archives Building and in the National Archives at College Park are operated to meet the needs of researchers and NARA staff members. If you are not conducting research in archival materials at NARA, NARA Library staff will refer you to public libraries and other possible sources for such published materials.

§ 1280.68 May I use the cafeterias?

Yes, the Charters Café in the National Archives Building is normally open to the public Monday through

Friday, 10 a.m. to 4 p.m. and the cafeteria at the National Archives at College Park is open to the public from 8 a.m. to 4 p.m.

[73 FR 36794, June 30, 2008]

Subpart D—What Rules Apply to Use NARA Public Areas in the Washington, DC, Area?

GENERAL

SOURCE: 73 FR 36794, June 30, 2008, unless otherwise noted.

§ 1280.70 When does NARA allow non-NARA groups to use the public areas of NARA property?

(a) The primary use of NARA property in the Washington, DC, area (the National Archives Building and the National Archives at College Park), including those areas open to the public, is the conduct of official NARA business, including public programs and other activities conducted in conjunction with government and non-government organizations and the Foundation for the National Archives (''Foundation''). In conducting official business, NARA and its partners use all of the public areas of the Washington, DC, area facilities. There are no public areas in the Washington National Records Center in Suitland, MD.

(b) NARA may permit, under the conditions described in this subpart, the occasional use of certain public areas by other Federal agencies, quasi-Federal agencies, and state, local, and tribal government organizations for official activities. NARA also permits the occasional, non-official use of its public areas by organizations when the activity relates to or furthers NARA's archival, records, or other programs.

§ 1280.71 What are the general rules for using NARA property in the Washington, DC, area?

In addition to the rules listed in Subparts A, B, and C of this part, you must adhere to the following rules when using NARA public spaces:

(a) All use must relate to or further the archival, records, or other activities of NARA. Examples of use that meet this standard include programs that promote research in or the dissemination and use of NARA holdings, including educational programs and materials, the preservation of NARA holdings or the historical records and documentary materials of other institutions, and the use and enjoyment of NARA exhibits.

(b) All use must be consistent with the public perception of NARA as an archival and research institution.

(c) When NARA cohosts an activity with the Foundation or other organizations, NARA must be identified as the cohost in all materials and publicity relating to the activity.

(d) When NARA has authorized your organization to use NARA property, you may not characterize your use of NARA property as an endorsement by NARA of your organization or its activities, or otherwise suggest an official relationship between NARA and your organization.

(e) You are not allowed to charge an admission fee or make any indirect assessment for admission, and you may not otherwise collect money at the event.

(f) You may not use NARA property or permission to use that property to advertise, promote, or sell commercial enterprises, products, or services, or for partisan political, sectarian, or similar purposes.

(g) You may not use NARA property if you or your organization or group engages in discriminatory practices proscribed by the Civil Rights Act of 1964, as amended.

(h) You must not misrepresent your identity to the public nor conduct any activities in a misleading or fraudulent manner.

(i) You must ensure that no Government property is destroyed, displaced, or damaged during your use of NARA public areas. You must take prompt action to replace, return, restore, repair or repay NARA for any damage caused to Government property during the use of NARA facilities.

§ 1280.72 What additional rules apply for a NARA approved event?

(a) Approved applicants must provide support people as needed to register guests, distribute approved literature, name tags, and other material.

(b) We must approve in advance any item that you plan to distribute or display during your use of NARA property, or any notice or advertisement that refers, directly or indirectly, to NARA, the Foundation for the National Archives, or the National Archives Trust Fund, or incorporates any of the seals described in 36 CFR 1200.2.

(c) We must approve in advance any vendor or caterer who will work in NARA facilities. You must comply with all NARA requirements for the use of food and drink at your event.

(d) No food or drink may be present or consumed in areas where original records or historical materials are displayed.

NATIONAL ARCHIVES BUILDING, WASHINGTON, DC

§ 1280.74 What spaces in the National Archives Building are available for use by non-NARA groups and organizations?

You may ask to use the following areas in the National Archives Building, Washington, DC:

Area	Capacity
Rotunda Galleries	250 persons.
William G. McGowan Theater	290 persons.
Archivist's Reception Room	125 persons.
Presidential Conference Rooms.	20 to 70 persons.

§ 1280.76 When are the public areas available for private events in the National Archives Building?

Most public areas are available for set-up and use on weekdays from 6 p.m. until 10:30 p.m. during the fall and winter seasons (day after Labor Day through March 14). The areas are available for set-up and use from 7:30 p.m. until 10:30 p.m. in the spring season (March 15 through Labor Day). The areas are not available during weekends or on Federal holidays. A NARA staff member must be present at all times when non-NARA groups use NARA spaces.

§ 1280.78 Does NARA charge fees for the use of public areas in the National Archives Building?

(a) NARA is authorized to charge fees for the occasional, non-official use of its public areas, as well as for services related to such use, including additional cleaning, security, and other staff services. NARA will either exercise this authority directly, or, for activities co-sponsored with the Foundation for the National Archives, as part of your group's arrangements with the Foundation.

(b) We will inform organizations interested in using public spaces in the National Archives Building in advance and in writing of the total estimated cost associated with using the public area of interest. Fees NARA charges are paid to the National Archives Trust Fund.

(c) Federal and quasi-Federal agencies, State, local, and tribal governmental institutions using public space for official government functions pay fees to the National Archives Trust Fund only for the costs for room rental, administrative fees, additional cleaning, security, and other staff services NARA provides.

[73 FR 36794, June 30, 2008, as amended at 78 FR 41305, July 10, 2013]

§ 1280.80 How do I request to use NARA public areas in the National Archives Building?

(a) Direct your request to use space to Special Events (Partnerships Division), National Archives and Records Administration, 700 Pennsylvania Avenue NW., Washington, DC 20408; or request by email to *specialevents@nara.gov*.

(b) You must submit requests, signed by an authorized official of your organization, to use NARA public areas at least 30 calendar days before the proposed event is to occur.

(c) OMB control number 3095–0043 has been assigned to the information collection contained in this section.

[73 FR 36794, June 30, 2008, as amended at 78 FR 41305, July 10, 2013]

§ 1280.82 How will NARA handle my request to use public areas in the National Archives Building?

(a) When you ask to use property in the National Archives Building, we review your request to:

(1) Ensure that it meets all of the provisions in this subpart;

(2) Determine if the public area you have requested is available on the date and time you have requested;

(3) Evaluate whether your proposed use is appropriate for the requested space; and

(4) Determine the costs of the event.

(b) When we have completed this review, we will notify you of the decision. We may ask for additional information before deciding whether or not to approve your event.

(c) NARA reserves the right to review, reject, or require changes in any material, activity, or caterer you intend to use for the event.

§ 1280.84 May I ask to use the Rotunda?

The Rotunda is primarily used for the public exhibition of the Charters of Freedom and other documents from NARA's holdings. NARA also uses the Rotunda for activities that further its Strategic Plan. Therefore, the use of the Rotunda for private events is not permitted. NARA may, upon application, permit other Federal agencies, quasi-Federal agencies, and State, local, and tribal governments to use the Rotunda for official functions, with NARA as a co-sponsor. Governmental groups that use the Rotunda for official functions must reimburse NARA for the cost of additional cleaning, security, and other staff services.

NATIONAL ARCHIVES AT COLLEGE PARK, MD

§ 1280.85 What space in the National Archives at College Park is available for use by non-NARA groups and organizations?

You may ask to use the following areas:

Area	Capacity
Auditorium	300.
Lecture Rooms	30 to 70 persons (or up to 300 with all dividers removed).

§ 1280.86 When are the public areas available for events in the National Archives at College Park?

Most areas are available for set-up and use from 8 a.m. until 9:30 p.m., Monday through Friday, and from 9 a.m. until 4:30 p.m. on Saturday. A NARA staff member must be present at all times when the public area is in use. If the space and staff are available, we may approve requests for events held before or after these hours and on Sunday.

§ 1280.87 Does NARA charge fees for the use of public areas in the National Archives at College Park?

NARA may charge a fee under 44 U.S.C. 2903(b) for the use of public areas in the National Archives at College Park. We inform organizations in advance and in writing of the total estimated cost of using the public areas. Federal and quasi-Federal agencies, State, local, and tribal governmental institutions using public space for official government functions pay fees to the National Archives Trust Fund only for the costs for room rental, administrative fees, additional cleaning, security, and other staff services NARA provides.

[78 FR 41305, July 10, 2013]

§ 1280.88 How do I request to use NARA public areas in the National Archives at College Park?

(a) Direct your request to use space to Special Events (Partnerships Division), National Archives and Records Administration, 700 Pennsylvania Avenue NW., Washington, DC 20408; or request by email to *specialevents@nara.gov*.

(b) You must submit requests for use of NARA public areas at least 30 calendar days before the proposed event is to occur.

(c) OMB control number 3095–0043 has been assigned to the information collection contained in this section.

[73 FR 36794, June 30, 2008, as amended at 78 FR 41305, July 10, 2013]

§ 1280.89 How will NARA handle my request to use public areas in the National Archives at College Park?

(a) When you ask to use public areas at the National Archives at College Park, we will review your request to:

(1) Ensure that it meets all of the provisions in this subpart;

(2) Determine if the room you have requested is available on the date and time you have requested; and

(3) Determine the cost of the event.

(b) When we have completed this review, we will notify you of the decision. We may ask for additional information before deciding whether or not to approve your event.

(c) NARA reserves the right to review, reject, or require changes in any material, activity, or caterer you intend to use for the event.

Subpart E—What Additional Rules Apply for Use of Facilities in Presidential Libraries?

§ 1280.90 What are the rules of conduct while visiting the Presidential libraries?

In addition to the rules in Subpart A, when visiting the museums of the Presidential Libraries, you may be required to check all of your parcels and luggage in areas designated by Library staff.

§ 1280.92 When are the Presidential library museums open to the public?

(a) The Presidential library museums are open every day except Thanksgiving, December 25, and January 1 (with the exception of the Lyndon Baines Johnson Library which is only closed December 25). For more specific information about museum hours, please contact the libraries directly or visit the NARA Web site at *http://www.archives.gov*. Hours for the Presidential libraries' research rooms are also posted at *http://www.archives.gov*.

(b) See 36 CFR 1253.3 for the operating hours of the research rooms of the Presidential Libraries.

[65 FR 34978, June 1, 2000, as amended at 75 FR 71547, Nov. 24, 2010]

§ 1280.94 When do Presidential libraries allow other groups to use their public areas for events?

(a) Although Presidential Library buildings and grounds are intended primarily for the libraries' use in carrying out their programs, you may request the use of Presidential Library facilities when the proposed activity is:

(1) Sponsored, cosponsored, or authorized by the library;

(2) Conducted to further the library's interests; and

(3) Scheduled so as not to interfere with the normal operation of the library.

(b) Your event at the library must be for the benefit of or in connection with the mission and programs of the library and must be consistent with the public perception of the library as a research and cultural institution.

(c) To request the use of a library area, you must apply in writing to the library director (see 36 CFR 1253.3 for the address) and complete NA Form 16011, Application for Use of Space in Presidential Libraries. OMB control number 3095–0024 has been assigned to the information collection contained in this section.

(d) You may not use library facilities for any activities that involve:

(1) Profit making;

(2) Commercial advertising and sales;

(3) Partisan political activities;

(4) Sectarian activities, or other similar activities; or

(5) Any use inconsistent with those authorized in this section.

(e) You may not charge admission fees, indirect assessment, or take any other kind of monetary collection at the event. NARA will charge normal admission fees to the museum if that area is used for the event.

(f) You will be assessed additional charges by the library director to reimburse the Government for expenses incurred as a result of your use of the library facility.

§ 1280.96 Supplemental rules.

Library directors may establish appropriate supplemental rules governing use of Presidential libraries and adjacent buildings and areas under NARA control.

Subpart F—What Additional Rules Apply for Use of Public Areas at Regional Records Services Facilities?

§ 1280.100 What are the rules of conduct at NARA regional records services facilities?

While at any NARA regional records services facility, you are subject to all of the following:

(a) The GSA regulations, Conduct on Federal Property (41 CFR Part 102–74, Subpart C);

(b) The rules in Subparts B and F of this part;

(c) Section 1280.1(b through d);

(d) Section 1280.32(1);

(e) Section 1280.34 (a)(1) and (a)(2); and

(f) Section 1280.36.

[68 FR 53883, Sept. 15, 2003]

§ 1280.102 When do NARA regional records services facilities allow other groups to use their public areas for events?

(a) Although NARA regional records services facility auditoriums and other public spaces in the facility buildings and the facility grounds are intended primarily for the use of the NARA regional records services facility in carrying out its programs, you may request to use one of these areas for lectures, seminars, meetings, and similar activities when these activities are:

(1) Sponsored, cosponsored, or authorized by the NARA regional records services facility;

(2) To further NARA's interests; and

(3) Scheduled so as not to interfere with the normal operation of the NARA regional records services facility.

(b) Your event at the NARA regional records services facility must be for the benefit of or in connection with the mission and programs of NARA.

(c) You must ask permission to use a public area at a NARA regional records services facility from the director of that facility (see 36 CFR 1253.6 for a list of addresses).

(d) NARA regional records services facilities will not allow use of any auditoriums or other public spaces for any activities that involve:

(1) Profit making;

(2) Commercial advertising and sales;

(3) Partisan political activities;

(4) Sectarian activities, or other similar activities; or

(5) Any use inconsistent with those authorized in this section.

(e) You may not charge admission fees, indirect assessment, or take any other kind of monetary collection at the event.

(f) You will be assessed a charge by the facility director to reimburse the Government for expenses incurred as a result of the your use of the facility.

PART 1281—PRESIDENTIAL LIBRARY FACILITIES

Sec.

1281.1 What is the scope of this part?
1281.2 What publications are incorporated by reference?
1281.3 What definitions apply to this part?
1281.4 What are the architectural and design standards for Presidential libraries?
1281.6 What certifications must be provided to NARA?
1281.8 What information must be provided to NARA for its report to Congress on a new Presidential library facility?
1281.10 When does a foundation consult with NARA before offering a gift of a physical or material change, or addition to an existing library?
1281.12 What information must be provided to NARA for its report to Congress on a change or addition to a Presidential library facility?
1281.14 What type of endowment is required for a Presidential library?
1281.16 What standard does NARA use for measuring building size?

AUTHORITY: 44 U.S.C. 2104(a), 2112.

SOURCE: 73 FR 34198, June 17, 2008, unless otherwise noted.

§ 1281.1 What is the scope of this part?

(a) This part implements provisions of the Presidential Libraries Act, codified at 44 U.S.C. 2112(a) and (g). The Act requires the Archivist of the United States to promulgate architectural and design standards for new and existing Presidential libraries in order to ensure that such depositories preserve Presidential records subject to Chapter 22 of this title and papers and other historical materials accepted for deposit under section 2111 of this title and contain adequate research facilities. In addition the Archivist must submit a written report to the Congress before accepting new libraries or certain proposed physical or material changes or additions to an existing library; and to ensure, for existing libraries subject to the mandatory endowment requirement, that the endowment specified by 44 U.S.C. 2112(g) has

been transferred to the National Archives Trust Fund before acceptance by the Archivist.

(b) This part applies to design and construction of new libraries that are offered to NARA on or after July 17, 2008 and to material changes or additions to new and existing libraries funded wholly by gift on or after that date.

§ 1281.2 What publications are incorporated by reference?

(a) The materials listed in this section are incorporated by reference in the corresponding sections noted. These incorporations by reference were approved by the Director of the Federal Register in accordance with 5 U.S.C. 552(a) and 1 CFR part 51. These materials are incorporated as they exist on the date of the approval, and notice of any change in these materials will be published in the FEDERAL REGISTER. The materials are available for purchase at the corresponding addresses noted below. You may inspect a copy at the National Archives and Records Administration, 8601 Adelphi Road, College Park, MD 20740 or at the Office of the Federal Register (OFR). For information on the availability of this material at the OFR, call 202–741–6030, or go to: *http://www.archives.gov/federal_register/code_of_federal_regulations/ibr_locations.html*.

(b) The following materials are available for purchase from the Building Owners and Managers Association (BOMA), BOMA International 1201 New York Avenue, NW., Suite 300, Washington DC, 20005, *http://www.boma.org*. or the American National Standards Institute, (ANSI), Inc., 11 West 42nd Street, New York, NY 10036.

(1) ANSI/BOMA Z65.1–1996, Standard Method for Measuring Floor Areas in Office Buildings (the BOMA Standard), approved June 7, 1996; IBR approved for §§ 1281.3, and 1281.16.

(2) [Reserved]

[73 FR 34198, June 17, 2008, as amended at 76 FR 11337, Mar. 2, 2011]

§ 1281.3 What definitions apply to this part?

The following definitions apply to this part:

Architectural and design standards. This term refers to the document cited in § 1281.4.

Archival functions. The term means arranging, describing, reviewing, preserving, reproducing, restoring, exhibiting, and making available Presidential and other records and historical materials in the care and custody of the Presidential libraries, and includes the salaries and expenses of NARA personnel performing those functions.

Endowment library. This term means a Presidential library that is subject to the endowment requirements of 44 U.S.C. 2112(g). The term includes the existing libraries of presidents who took the oath of office as President for the first time on or after January 20, 1985, the proposed library of President George W. Bush, and the libraries of presidents who take the oath of office as President for the first time on or after July 1, 2002.

Equipment. As used in this part, the term means operating equipment that must be furnished with the new library and included in the calculation of the required endowment. Operating equipment is fundamental to the operation of the library and is normally built into the facility or permanently mounted to the structure.

Existing library. This term means a Presidential library that has been accepted by the Archivist under 44 U.S.C. 2112(a) and established as part of the system of Presidential libraries managed by NARA.

Facility operations. This term means those activities, including administrative services, involved with maintaining, operating, protecting, and improving a Presidential library.

Foundation. This term means a private organization organized under state law to construct a new Presidential library. The term usually refers to nonprofit charitable organizations that meet the requirements of section 501(c)(3) of the Internal Revenue Code (26 CFR 501(c)(3)). The term specifically includes ''foundation'' and ''institute,'' as those terms are used in 44 U.S.C. 2112(a)(1)(B).

Historical materials. The term ''historical materials'' has the meaning set forth at 44 U.S.C. 2101.

New library. This term means a Presidential library for a President who took the oath of office as President for the first time on or after January 20, 1985, that has not been accepted by the Archivist under 44 U.S.C. 2112(a). Presidential libraries that have been accepted by the Archivist and established as part of the system of Presidential libraries that are managed by NARA are ''existing libraries.''

Physical or material change or addition. This term means any addition of square footage, as defined by the BOMA Standard (incorporated by reference in § 1281.2) or any physical or material change to the existing structure of an existing library that results in a significant increase in the cost of facility operations.

Presidential library. This term means a Presidential archival depository as defined in 44 U.S.C. 2101.

Presidential records. The term has the meaning set forth at 44 U.S.C. 2201.

§ 1281.4 What are the architectural and design standards for Presidential libraries?

The Archivist is required by 44 U.S.C. 2112(a)(2) to promulgate architectural and design standards for Presidential libraries. The standards address the architectural, design, and structural requirements of a new Presidential library and additions or renovations, and they ensure that Presidential libraries are safe and efficient to operate and provide adequate and secure research and museum facilities. A copy of the standards is provided to the foundation upon request and is available from the Office of Presidential Libraries (NL), Room 2200, 8601 Adelphi Rd., College Park, MD 20740–6001.

§ 1281.6 What certifications must be provided to NARA?

(a) The foundation must provide to NARA design and construction certifications specified in the architectural and design standards.

(b) Any item that NARA finds is not in compliance with the architectural and design standards must be corrected by the foundation or, if not corrected by the foundation, will be corrected by NARA with the foundation paying the full cost of taking necessary corrective action.

§ 1281.8 What information must be provided to NARA for its report to Congress on a new Presidential library facility?

(a) NARA must submit a report to Congress on a proposed new library pursuant to 44 U.S.C. 2112(a)(3). The foundation that is building the library must help NARA as necessary in compiling the information needed for this report. If a State, political subdivision, university, institution of higher learning, or institute participates in the construction of the new library (e.g., by making land available for the facility), that party is subject to the same requirement. Requested information must be sent to the Office of Presidential Libraries (NL), Room 2200, 8601 Adelphi Rd., College Park, MD 20740–6001 far enough in advance of the anticipated date of transfer of the Library for NARA to compile and submit the report so that it may lie before Congress for the minimum time period specified in 44 U.S.C. 2112(a)(5). The normal lead time for submitting the required information is a least six months in advance of the anticipated date of transfer, but the submission date is subject to negotiation between NARA and the foundation in specific cases. The collection of information by NARA for these purposes has been approved under the Paperwork Reduction Act by the Office of Management and Budget with the control number 3095–0036.

(b) Paragraph (a)(3) of 44 U.S.C. 2112 lists the information that NARA must include in its report to Congress. The foundation and NARA will agree as part of the planning process for a new library on what information the foundation will provide and when. The same requirement applies to other entities involved in the construction of a new library (e.g., a local government or university). Foundations will normally be responsible, at a minimum, for providing the following information to NARA:

(1) A description of the land, facility, and equipment offered as a gift or to be made available without transfer of title, which must include:

(i) The legal description of the land, including plat, and evidence of clear title to the land upon which the library is constructed;

(ii) Site plan, floor plans, building sections and elevations, artist's representation of building and grounds;

(iii) Description of building contents, including furniture, equipment, and museum installations; and

(iv) Measurement of the facility in accordance with § 1281.16.

(2) A statement specifying the estimated total cost of the library and the amount of the endowment required pursuant to 44 U.S.C. 2112(g);

(3) An offer or other statement setting forth the terms of the proposed agreement for transfer or use of the facility, if any;

(4) Copies of any proposed agreements between the state, other political subdivision, the donating group, other institutions, and the United States which may affect ownership or operation of the library facility;

(5) A statement of and copies of any proposed agreements concerning the proposed support of library programs by non-federal sources; and

(6) A statement on cost-saving design features of the building.

(7) A written certification that the library and the equipment therein will comply with NARA standards.

§ 1281.10 When does a foundation consult with NARA before offering a gift of a physical or material change, or addition to an existing library?

A foundation must consult with the Office of Presidential Libraries before beginning the process of offering a gift for the purpose of making a physical or material change or addition to a new or existing library. NARA will furnish the interested foundation the current architectural and design standards as specified in § 1281.4. Others may request a single copy by writing the Office of Presidential Libraries (NL), Room 2200, 8601 Adelphi Road, College Park, Maryland 20740–6001.

§ 1281.12 What information must be provided to NARA for its report to Congress on a change or addition to a Presidential library facility?

(a) NARA must submit a report to Congress on a proposed physical or material change or addition to an existing library that is being funded wholly by gift. The foundation or other party offering the gift to NARA must help NARA as necessary in compiling the information needed for the report. Required information must be sent to the Office of Presidential Libraries (NL), Room 2200, 8601 Adelphi Rd., College Park, MD 20740–6001, far enough in advance of the Archivist's acceptance of the gift for NARA to compile and submit the report to Congress in accordance with 44 U.S.C. 2112(a)(5). The normal lead time for submitting the required information on physical or material changes or additions is at least nine (9) months in advance of the anticipated date that work will begin on the physical or material change or addition to the library. The collection of information contained in this section has been approved under the Paperwork Reduction Act by the Office of Management and Budget with the control number 3095–0036.

(b) Paragraph (a)(4) of 44 U.S.C. 2112 lists the information that NARA must include in its report to Congress. The donor and NARA will agree as part of the planning process what information the donor will provide and when, but donors will normally be responsible, at a minimum, for providing the following information to NARA:

(1) A description of the gift, which must include as appropriate:

(i) The legal description of the land, including plat;

(ii) Site plan, floor plans, building sections and elevations, artist's representation of building and grounds as they will be affected by the gift;

(iii) Description of building contents that are part of the gift, including furniture, equipment, and museum installations;

(iv) For endowment libraries, a measurement of the addition or change to the facility in accordance with § 1281.16; and

(v) A review of all critical spaces where NARA holdings will be stored,

used, or exhibited, including information on life-safety, environmental, holdings storage, and other systems against NARA standards.

(2) A statement of the estimated total cost of the proposed physical or material change or addition to the library, and, for endowment libraries, an estimate of the amount of the additional endowment required pursuant to 44 U.S.C. 2112(g).

(3) A statement of the purpose of the proposed change or addition.

(4) A written certification that the library and the equipment therein will comply with NARA standards after the change or addition is made.

§ 1281.14 What type of endowment is required for a Presidential library?

(a) *Endowment requirement—new libraries.* The foundation or organization that is offering NARA a new Presidential library must establish an endowment for the library, by gift or bequest, in the National Archives Trust Fund before the Archivist may accept the transfer of the library. The purpose of the endowment is to help NARA defray the cost of facility operations. The endowment requirement for the prospective new library of President George W. Bush is set forth in paragraphs 2 and 3 of 44 U.S.C. 2112(g). The endowment requirements for the new libraries of presidents taking the oath of office from the first time on or after July 1, 2002, are set forth in paragraphs 2, 3, and 5 of 44 U.S.C. 2112(g).

(b) *Endowment requirement—change or addition to an endowment library.* For a proposed physical or material change or addition to an endowment library that is being funded wholly by gift, the foundation or other organization that is offering the gift must agree, as a condition of the gift, to transfer monies by gift or bequest to the library's existing endowment in the National Archives Trust Fund in an amount sufficient to satisfy the requirements of paragraphs 2, 3, and 5 of 44 U.S.C. 2112(g). The Archivist must determine that the additional endowment monies have been transferred to the Trust Fund before he accepts the gift of the physical or material change or addition.

(c) *Use of endowment income.* The income from a library's endowment is available to cover the cost of facility operations, but is not available for the performance of archival functions.

(d) *Calculating a library's endowment.* The formulas for calculating the required endowment are set forth in 44 U.S.C. 2112(g)(3)–(5).

(e) *Equipment costs that must be included in the endowment calculation.* The cost of all operating equipment provided with a new library must be included in the endowment calculation pursuant to 44 U.S.C. 2112(g)(3). The Archivist will provide in the architectural and design standards, a list of equipment guidelines, recommendations, and minimum requirements for a foundation's use in designing and building a new library. The list is not exhaustive and requirements may change with evolving technology, program requirements, and the final library design.

(f) *Formula for a shared use library building.* For endowment purposes, the construction cost of a shared use library building containing both NARA and Foundation-controlled areas will be determined using the following formula: The percentage of the usable square footage of the NARA-controlled areas to the usable square footage of the entire building multiplied by the cost of the entire building. That figure is then used in calculating a library's endowment as specified by subsection (d) of this section and 44 U.S.C. 2112(g)(3)–(5).

§ 1281.16 What standard does NARA use for measuring building size?

For purposes of 44 U.S.C. 2112(g)(3) and (4), and this part, NARA has adopted the BOMA Standard (incorporated by reference in § 1281.2) as the standard for measuring the size of the facility and the value for calculating the endowment. The architectural and design standards contain the description of the area to be measured as to obtain the useable square footage and the exclusions to the measurement.

PART 1284—EXHIBITS

Sec.

1284.1 Scope of part.

1284.20 Does NARA exhibit privately-owned material?
1284.30 Does NARA lend documents to other institutions for exhibit purposes?

AUTHORITY: 44 U.S.C. 2104(a), 2109.

SOURCE: 69 FR 39323, June 30, 2004, unless otherwise noted.

§ 1284.1 Scope of part.

This part sets forth policies and procedures concerning the exhibition of materials.

§ 1284.20 Does NARA exhibit privately-owned material?

(a) NARA does not normally accept for display documents, paintings, or other objects belonging to private individuals or organizations except as part of a NARA-produced exhibit.

(b) NARA may accept for temporary special exhibit at the National Archives Building privately-owned documents or other objects under the following conditions:

(1) The material to be displayed relates to the institutional history of the National Archives and Records Administration or its predecessor organizations, the National Archives Establishment and the National Archives and Records Service;

(2) Exhibition space is available in the building that NARA judges to be appropriate in terms of security, light level, climate control, and available exhibition cases or other necessary fixtures; and

(3) NARA has resources (such as exhibit and security staff) available to produce the special exhibit.

(c) The Director of Museum Programs (NWE), in conjunction with the NARA General Counsel when appropriate, reviews all offers to display privately-owned material in the Washington, DC, area, and negotiates the terms of exhibition for offers that NARA can accept. Directors of Presidential libraries perform these tasks for their respective libraries. The lender must provide in writing evidence of title to and authenticity of the item(s) to be displayed before NARA makes a loan agreement.

(d) The Director of Museum Programs or director of the pertinent Presidential library will inform the offering private individual or organization of NARA's decision in writing within 60 days.

§ 1284.30 Does NARA lend documents to other institutions for exhibit purposes?

Yes, NARA considers lending documents that are in appropriate condition for exhibition and travel. Prospective exhibitors must comply with NARA's requirements for security, fire protection, environmental controls, packing and shipping, exhibit methods, and insurance. For additional information, contact Registrar, Museum Programs (NWE), National Archives and Records Administration, 8601 Adelphi Road, College Park, MD 20740–6001.

SUBCHAPTER H—JFK ASSASSINATION RECORDS

PART 1290—GUIDANCE FOR INTERPRETATION AND IMPLEMENTATION OF THE PRESIDENT JOHN F. KENNEDY ASSASSINATION RECORDS COLLECTION ACT OF 1992 (JFK ACT)

Sec.
1290.1 Scope of assassination record.
1290.2 Scope of additional records and information.
1290.3 Sources of assassination records and additional records and information.
1290.4 Types of materials included in scope of assassination record and additional records and information.
1290.5 Requirement that assassination records be released in their entirety.
1290.6 Originals and copies.
1290.7 Additional guidance.
1290.8 Implementing the JFK Act—Notice of Assassination Record Designation.

AUTHORITY: 44 U.S.C. 2107.

SOURCE: 60 FR 33349, June 28, 1995, unless otherwise noted. Redesignated at 65 FR 39550, June 27, 2000.

§ 1290.1 Scope of assassination record.

(a) An *assassination record* includes, but is not limited to, all records, public and private, regardless of how labeled or identified, that document, describe, report on, analyze or interpret activities, persons, or events reasonably related to the assassination of President John F. Kennedy and investigations of or inquiries into the assassination.

(b) An *assassination record* further includes, without limitation:

(1) All records as defined in Section 3(2) of the JFK Act;

(2) All records collected by or segregated by all Federal, state, and local government agencies in conjunction with any investigation or analysis of or inquiry into the assassination of President Kennedy (for example, any intra-agency investigation or analysis of or inquiry into the assassination; any interagency communication regarding the assassination; any request by the House Select Committee on Assassinations to collect documents and other materials; or any inter- or intra-agency collection or segregation of documents and other materials);

(3) Other records or groups of records listed in the Notice of Assassination Record Designation, as described in § 1290.8 of this chapter.

[60 FR 33349, June 28, 1995. Redesignated at 65 FR 39550, June 27, 2000, as amended at 66 FR 18873, Apr. 12, 2001]

§ 1290.2 Scope of additional records and information.

The term *additional records and information* includes:

(a) All documents used by government offices and agencies during their declassification review of assassination records as well as all other documents, indices, and other material (including but not limited to those that disclose cryptonyms, code names, or other identifiers that appear in assassination records) that the Assassination Records Review Board (Review Board) has a reasonable basis to believe may constitute an assassination record or would assist in the identification, evaluation or interpretation of an assassination record. The Review Board will identify in writing those records and other materials it intends to seek under this section.

(b) All training manuals, instructional materials, and guidelines created or used by the agencies in furtherance of their review of assassination records.

(c) All records, lists, and documents describing the procedure by which the agencies identified or selected assassination records for review.

(d) Organizational charts of government agencies.

(e) Records necessary and sufficient to describe the agency's:

(1) Records policies and schedules;

(2) Filing systems and organization;

(3) Storage facilities and locations;

(4) Indexing symbols, marks, codes, instructions, guidelines, methods, and procedures;

(5) Search methods and procedures used in the performance of the agencies' duties under the JFK Act; and

(6) Reclassification to a higher level, transfer, destruction, or other information (e.g., theft) regarding the status of assassination records.

(f) Any other record that does not fall within the scope of assassination record as described in § 1290.1, but which has the potential to enhance, enrich, and broaden the historical record of the assassination.

[60 FR 33349, June 28, 1995. Redesignated at 65 FR 39550, June 27, 2000, as amended at 66 FR 18873, Apr. 12, 2001]

§ 1290.3 Sources of assassination records and additional records and information.

Assassination records and additional records and information may be located at, or under the control of, without limitation:

(a) Agencies, offices, and entities of the executing, legislative, and judicial branches of the Federal Government;

(b) Agencies, offices, and entities of the executive, legislative, and judicial branches of state and local governments;

(c) Record repositories and archives of Federal, state, and local governments, including presidential libraries;

(d) Record repositories and archives of universities, libraries, historical societies, and other similar organizations;

(e) Individuals who possess such records by virtue of service with a government agency, office, or entity;

(f) Persons, including individuals and corporations, who have obtained such records from sources identified in paragraphs (a) through (e) of this section;

(g) Persons, including individuals and corporations, who have themselves created or have obtained such records from sources other than those identified in paragraphs (a) through (e) of this section;

(h) Federal, state, and local courts where such records are being held under seal; or

(i) Foreign governments.

§ 1290.4 Types of materials included in scope of assassination record and additional records and information.

The term *record* in *assassination record* and *additional records and information* includes, for purposes of interpreting and implementing the JFK Act:

(a) Papers, maps, and other documentary material;

(b) Photographs;

(c) Motion pictures;

(d) Sound and video recordings;

(e) Machine readable information in any form; and

(f) Artifacts.

§ 1290.5 Requirement that assassination records be released in their entirety.

An assassination record shall be released in its entirety except for portions specifically postponed pursuant to the grounds for postponement of public disclosure of records established in § 2107.6 of the JFK Act, and no portion of any assassination record shall be withheld from public disclosure solely on grounds of non-relevance unless, in the Review Board's sole discretion, release of part of a record is sufficient to comply with the intent and purposes of the JFK Act.

§ 1290.6 Originals and copies.

(a) For purposes of determining whether originals or copies of assassination records will be made part of the President John F. Kennedy Assassination Records Collection (JFK Assassination Records Collection) established under the JFK Act, the following shall apply:

(1) In the case of papers, maps, and other documentary materials, the Review Board may determine that record copies of government records, either the signed original, original production or a reproduction that has been treated as the official record maintained to chronicle government functions or activities, may be placed in the JFK Assassination Records Collection;

(2) In the case of other papers, maps, and other documentary material, the Review Board may determine that a true and accurate copy of a record in lieu of the original may be placed in the JFK Assassination Records Collection;

(3) In the case of photographs, the original negative, whenever available (otherwise, the earliest generation print that is a true and accurate copy), may be placed in the JFK Assassination Records Collection;

(4) In the case of motion pictures, the camera original, whenever available (otherwise, the earliest generation

print that is a true and accurate copy), may be placed in the JFK Assassination Records Collection;

(5) In the case of sound and video recordings, the original recording, whenever available (otherwise, the earliest generation copy that is a true and accurate copy), may be placed in the JFK Assassination Records Collection;

(6) In the case of machine-readable information, a true and accurate copy of the original (duplicating all information contained in the original and in a format that permits retrieval of the information), may be placed in the JFK Assassination Records Collection; and

(7) In the case of artifacts, the original objects themselves may be placed in the JFK Assassination Records Collection.

(b) To the extent records from foreign governments are included in the JFK Assassination Records Collection, copies of the original records shall be sufficient for inclusion in the collection.

(c) In cases where a copy, as defined in paragraph (a) of this section, is authorized by the Review Board to be included in the JFK Assassination Records Collection, the Review Board may require that a copy be certified if, in its discretion, it determines a certification to be necessary to ensure the integrity of the JFK Assassination Records Collection. In cases where an original, as defined in paragraph (a) of this section, is required for inclusion in the JFK Assassination Records Collection, the Review Board may, at its discretion, accept the best available copy. In such cases that records included in the JFK Assassination Records Collection, whether originals or copies, contain illegible portions, such records shall have attached thereto a certified transcription of the illegible language to the extent practicable.

(d) For purposes of implementing the JFK Act, the term *copy* means a true and accurate photocopy duplication by a means appropriate to the medium of the original record that preserves and displays the integrity of the record and the information contained in it.

(e) Nothing in this section shall be interpreted to suggest that additional copies of any assassination records contained in the JFK Assassination Records Collection are not also assassination records that, at the Review Board's discretion, may also be placed in the JFK Assassination Records Collection.

(f) Nothing in this section shall be interpreted to prevent or to preclude copies of any electronic assassination records from being reformatted electronically in order to conform to different hardward and/or software requirements of audiovisual or machine readable formats if such is the professional judgment of the National Archives and Records Administration.

§ 1290.7 Additional guidance.

(a) A government agency, office, or entity includes, for purposes of interpreting and implementing the JFK Act, all current, past, and former departments, agencies, offices, divisions, foreign offices, bureaus, and deliberative bodies of any Federal, state, or local government and includes all inter- or intra-agency working groups, committees, and meetings that possess or created records relating to the assassination of President John F. Kennedy.

(b) The inclusion of artifacts in the scope of the term assassination record is understood to apply solely to the JFK Assassination Records Collection and to implement fully the terms of the JFK Act and has no direct or indirect bearing on the interpretation or implementation of any other statute or regulation.

(c) Whenever artifacts are included in the JFK Assassination Records Collection, it shall be sufficient to comply with the JFK Act if the public is provided access to photographs, drawings, or similar materials depicting the artifacts. Additional display of or examination by the public of artifacts in the JFK Assassination Records Collection shall occur under the terms and conditions established by the National Archives and Records Administration to ensure their preservation and protection for posterity.

(d) The terms and, or, any, all, and the plural and singular forms of nouns shall be understood in their broadest and most inclusive sense and shall not be understood to be terms of limitation.

(e) Unless the Review Board in its sole discretion directs otherwise, records that are identified with respect to a particular person shall include all records ralating to that person that use or reflect the true name or any other name, pseudonym, codeword, symbol number, cryptonym, or alias used to identify that person.

(f) Unless the Review Board in its sole discretion directs otherwise, records that are identified by the Review Board with respect to a particular operation or program shall include all records, pertaining to that program by any other name, pseudonym, codeword, symbol, number, or cryptonym.

§ 1290.8 Implementing the JFK Act—Notice of Assassination Record Designation.

(a) A Notice of Assassination Record Designation (NARD) shall be the mechanism for the Review Board to announce publicly its determination that a record or group of records meets the definition of assassination records.

(b) Notice of all NARDs will be published in the FEDERAL REGISTER within 30 days of the decision to designate such records as assassination records.

(c) In determining to designate such records as assassination records, the Review Board must determine that the record or group of record will more likely than not enhance, enrich, and broaden the historical record of the assassination.

PARTS 1291–1299 [RESERVED]

CHAPTER XV—OKLAHOMA CITY NATIONAL MEMORIAL TRUST

Part		*Page*
1500	[Reserved]	
1501	General provisions	757
1502–1599	[Reserved]	

PART 1500 [RESERVED]

PART 1501—GENERAL PROVISIONS

AUTHORITY: 16 U.S.C. 450ss; Pub. L. 105–58, 111 Stat. 1261.

SOURCE: 65 FR 14761, Mar. 17, 2000, unless otherwise noted.

§ 1501.1 Cross reference to National Park Service regulations.

As permitted by the Oklahoma City National Memorial Act, the Oklahoma City National Memorial Trust (the Trust) adopts by cross reference the provisions of the National Park Service in 36 CFR chapter I as shown in the following table. The table also indicates those parts, sections, and paragraphs that the Trust has chosen to exclude from adoption.

NATIONAL PARK SERVICE REGULATIONS

36 CFR Chapter I
Excluding parts 3 and 6–199
PART 1 GENERAL PROVISIONS
§ 1.1 Purpose
§ 1.2 Applicability and Scope
§ 1.3 Penalties
Excluding paragraphs (b) and (c)
§ 1.4 Definitions
Excluding paragraph (b)
§ 1.5 Closures and public use limits
§ 1.6 Permits
§ 1.7 Public Notice
§ 1.8 Information Collection
§ 1.10 Symbolic Signs
PART 2 RESOURCE PROTECTION, PUBLIC USE AND RECREATION
Excluding §§ 2.3, 2.16, 2.19, 2.60
§ 2.1 Preservation of natural and cultural and archeological resources
§ 2.2 Wildlife Protection
Excluding paragraphs (b), (c), and (d)
§ 2.4 Weapons, traps, and nets
Excluding paragraph (a)(2)
§ 2.5 Research specimens
§ 2.10 Camping and food storage
Excluding paragraphs (b)(1), (b)(2), (b)(3), (b)(4), (b)(6), (b)(8), and (d)
§ 2.11 Picnicking
§ 2.12 Audio Disturbances
Excluding paragraph (a)(3)
§ 2.13 Fires
Excluding paragraph (c)
§ 2.14 Sanitation and refuse
Excluding paragraphs (a)(7) and (a)(9)
§ 2.15 Pets
Excluding paragraphs (b) and (e)
§ 2.17 Aircraft and air delivery
Excluding paragraph (a)(2)
§ 2.18 Snowmobiles
Excluding paragraphs (d) and (e)
§ 2.20 Skating, skateboards and similar devices
§ 2.21 Smoking
Excluding paragraph (b)
§ 2.22 Property
§ 2.23 Recreation fees
Excluding paragraph (a)
§ 2.30 Misappropriation of property and services
§ 2.31 Trespassing, tampering and vandalism
§ 2.32 Interfering with agency functions
§ 2.33 Report of injury or damage
§ 2.34 Disorderly conduct
§ 2.35 Alcoholic beverages and controlled substances
§ 2.36 Gambling
§ 2.37 Noncommercial soliciting
§ 2.38 Explosives
§ 2.50 Special events
§ 2.51 Public assemblies, meetings
§ 2.52 Sale or distribution of printed matter
§ 2.61 Residing on Federal lands
§ 2.62 Memorialization
PART 4 VEHICLES AND TRAFFIC SAFETY
§ 4.1 Applicability and scope
§ 4.2 State law applicable
§ 4.3 Authorized emergency vehicles
§ 4.4 Report of motor vehicle accident
§ 4.10 Travel on park roads and designated routes
Excluding paragraph (c)(3)
§ 4.11 Load, weight and size limits
§ 4.12 Traffic control devices
§ 4.13 Obstructing traffic
§ 4.14 Open container of alcoholic beverage
§ 4.15 Safety belts
§ 4.20 Right of way
§ 4.21 Speed limits
Excluding paragraphs (a)(2) and (a)(3)
§ 4.22 Unsafe operation
§ 4.23 Operating under the influence of alcohol or drugs
§ 4.30 Bicycles
§ 4.31 Hitchhiking
PART 5 COMMERCIAL AND PRIVATE OPERATIONS
Excluding §§ 5.4, 5.9, and 5.10
§ 5.1 Advertisements
§ 5.2 Alcoholic beverages; sale of intoxicants
Excluding paragraph (b)
§ 5.3 Business operations
§ 5.5 Commercial photography
§ 5.6 Commercial vehicles
§ 5.7 Construction of buildings or other facilities
§ 5.8 Discrimination in employment practices
§ 5.13 Nuisances
§ 5.14 Prospecting, mining, and mineral leasing

PARTS 1502–1599 [RESERVED]

CHAPTER XVI—MORRIS K. UDALL SCHOLARSHIP AND EXCELLENCE IN NATIONAL ENVIRONMENTAL POLICY FOUNDATION

Part		*Page*
1600	Public availability of documents and records	761
1601–1699	[Reserved]	

PART 1600—PUBLIC AVAILABILITY OF DOCUMENTS AND RECORDS

Subpart A—Procedures for Disclosure of Records Under the Freedom of Information Act

Sec.
1600.1 General provisions.
1600.2 Public reading room.
1600.3 Requests for records.
1600.4 Timing of responses to requests.
1600.5 Responses to requests.
1600.6 Disclosure of requested records
1600.7 Special procedures for confidential Commercial information
1600.8 Appeals.
1600.9 Preservation of records.
1600.10 Fees.

Subpart B—Protection of Privacy and Access to Individual Records Under the Privacy Act of 1974

1600.21 General provisions.
1600.22 Requests for access to records.
1600.23 Responsibility for responding to requests for access to records.
1600.24 Responses to requests for access to records.
1600.25 Appeals from denials of requests for access to records.
1600.26 Requests for amendment or correction of records.
1600.27 Requests for accountings of record disclosures.
1600.28 Preservation of records.
1600.29 Fees.
1600.30 Notice of court-ordered and emergency disclosures.

AUTHORITY: 5 U.S.C. 552, 552a, 553; 20 U.S.C. 5608(a)(3).

Subpart A is also issued under 5 U.S.C. 571–574.

SOURCE: 66 FR 15034, Mar. 15, 2001, unless otherwise noted.

Subpart A—Procedures for Disclosure of Records Under the Freedom of Information Act

§ 1600.1 General provisions.

(a) This subpart contains the rules that the Morris K. Udall Scholarship and Excellence in National Environmental Policy Foundation (the Foundation) follows in processing requests for records under the Freedom of Information Act (FOIA), 5 U.S.C. 552. These rules should be read together with the FOIA, which provides additional information about access to records. Requests made by individuals for records about themselves under the Privacy Act of 1974, 5 U.S.C. 552a, which are processed under subpart B of this part, are processed under this subpart also. Information routinely provided to the public as part of a regular Foundation activity (for example, press releases, annual reports, informational brochures and the like) may be provided to the public without following this subpart. As a matter of policy, the Foundation makes discretionary disclosures of records or information exempt from disclosure under the FOIA whenever disclosure would not foreseeably harm an interest protected by a FOIA exemption, but this policy does not create any right enforceable in court.

(b) This subpart applies to all Foundation programs, including the U.S. Institute for Environmental Conflict Resolution (USIECR).

§ 1600.2 Public reading room.

(a) The Foundation maintains a public reading room that contains the records that the FOIA requires to be made regularly available for public inspection and copying. An index of reading room records shall be available for inspection and copying and shall be updated at least quarterly.

(b) The public reading room is located at the offices of the Foundation, 110 S. Church Avenue, Suite 3350, Tucson, Arizona.

(c) The Foundation also makes reading room records created on or after November 1, 1996, available electronically, if possible, at the Foundation's web site (which can be found at *www.udall.gov*). This includes the index of the reading room records, which will indicate which records are available electronically.

§ 1600.3 Requests for records.

(a) *How made and addressed.* You may make a request for records of the Foundation by writing to the General Counsel, Morris K. Udall Foundation, 110 South Church Avenue, Suite 3350, Tucson, Arizona 85701–1650. If you are making a request for records about yourself, see § 1600.21 for additional requirements. If you are making a request for records about another individual, either a written authorization signed by

that individual permitting disclosure of those records to you or proof that that individual is deceased (for example, a copy of a death certificate or an obituary) will help the processing of your request. For the quickest possible handling, you should mark both your request letter and the envelope ''Freedom of Information Act Request.''

(b) *Description of records sought.* You must describe the records that you seek in enough detail to enable Foundation personnel to locate them with a reasonable amount of effort. Whenever possible, your request should include specific information about each record sought, such as the date, title or name, author, recipient, and subject matter of the record. If the Foundation determines that your request does not reasonably describe records, it will tell you either what additional information is needed or why your request is otherwise insufficient. If your request does not reasonably describe the records you seek, the response to your request may be delayed.

(c) *Types of records not available.* The FOIA does not require the Foundation to:

(1) Compile or create records solely for the purpose of satisfying a request for records;

(2) Provide records not yet in existence, even if such records may be expected to come into existence at some future time; or

(3) Restore records destroyed or otherwise disposed of, except that the Foundation must notify the requester that the requested records have been destroyed or disposed of.

(d) *Agreement to pay fees.* If you make a FOIA request, your request shall be considered an agreement by you to pay all applicable fees charged under § 1600.10, up to $25.00, unless you seek a waiver of fees. The Foundation ordinarily will confirm this agreement in an acknowledgment letter. When making a request, you may specify a willingness to pay a greater or lesser amount.

§ 1600.4 Timing of responses to requests.

(a) *In general.* The Foundation ordinarily shall respond to requests according to their order of receipt.

(b) *Multitrack processing.* (1) The Foundation may use two or more processing tracks by distinguishing between simple and more complex requests based on the amount of work and/or time needed to process the request. The anticipated number of pages involved may be considered by the Foundation in establishing processing tracks. If the Foundation sets a page limit for its faster track, it will advise those whose request is placed in its slower track(s) of the page limits of its faster track(s).

(2) If the Foundation uses multitrack processing, it may provide requesters in its slower track(s) with an opportunity to limit the scope of their requests in order to qualify for faster processing within the specified limits of its faster track(s).

(c) *Unusual circumstances.* (1) Where the statutory time limits for processing a request cannot be met because of ''unusual circumstances,'' as defined in the FOIA, and the Foundation decides to extend the time limits on that basis, the Foundation shall as soon as practicable notify the requester in writing of the unusual circumstances and of the date by which processing of the request can be expected to be completed. Where the extension is for more than 10 working days, the Foundation shall provide the requester with an opportunity either to modify the request so that it may be processed within the time limits or to arrange an alternative time period for processing the request or a modified request.

(2) Where the Foundation reasonably believes that multiple requests submitted by a requester, or by a group of requesters acting in concert, constitute a single request that would otherwise involve unusual circumstances, and the requests involve clearly related matters, they may be aggregated. Multiple requests involving unrelated matters will not be aggregated.

(d) *Expedited processing.* (1) Requests and appeals will be taken out of order and given expedited treatment whenever it is determined that they involve:

(i) Circumstances in which the lack of expedited treatment could reasonably be expected to pose an imminent threat to the life or physical safety of an individual; or

(ii) An urgency to inform the public about an actual or alleged federal government activity, if made by a person primarily engaged in disseminating information;

(2) You may ask for expedited processing of a request for records at any time.

(3) In order to request expedited processing, you must submit a statement, certified to be true and correct to the best of your knowledge and belief, explaining in detail the basis for requesting expedited processing. For example, if you are a requester within the category in paragraph (d)(1)(ii) of this section, and you are not a full-time member of the news media, you must establish that you are a person whose main professional activity or occupation is information dissemination, though it need not be your sole occupation; you also must establish a particular urgency to inform the public about the government activity involved in the request, beyond the public's right to know about government activity generally. The formality of certification may be waived as a matter of administrative discretion.

(4) Within 10 calendar days of receipt of a request for expedited processing, the Foundation will decide whether to grant it and will notify you of the decision. If a request for expedited treatment is granted, the request will be given priority and processed as soon as practicable. If a request for expedited processing is denied, any appeal of that decision will be acted on expeditiously.

§ 1600.5 Responses to requests.

(a) *Acknowledgments of requests.* On receipt of your request, the Foundation ordinarily will send an acknowledgment letter to you, which will confirm your agreement to pay fees under § 1600.3(d) and provide an assigned request number for further reference.

(b) *Referral to another agency.* When a requester seeks records that originated in another Federal government agency, the Foundation will refer the request to the other agency for response. If the Foundation refers the request to another agency, it will notify the requester of the referral. A request for any records classified by some other agency will be referred to that agency for response.

(c) *Grants of requests.* Ordinarily, the Foundation will have 20 business days from when your request is received to determine whether to grant or deny your request. Once the Foundation determines to grant a request in whole or in part, it will notify you in writing. The Foundation will inform you in the notice of any fee charged under § 1600.10 and will disclose records to you promptly on payment of any applicable fee. Records disclosed in part will be marked or annotated to show the amount of information deleted, unless doing so would harm an interest protected by an applicable exemption. The location of the information deleted also will be indicated on the record, if technically feasible.

(d) *Adverse determinations of requests.* If the Foundation denies your request in any respect, it will notify you of that determination in writing. Adverse determinations, or denials of requests, consist of: a determination to withhold any requested record in whole or in part; a determination that a requested record does not exist or cannot be located; a determination that a record is not readily reproducible in the form or format sought; a determination that what has been requested is not a record subject to the FOIA; a determination on any disputed fee matter, including a denial of a request for a fee waiver; and a denial of a request for expedited treatment. The denial letter shall be signed by the General Counsel or his/her designee, and shall include:

(1) The name and title or position of the person responsible for the denial;

(2) A brief statement of the reason(s) for the denial, including any FOIA exemption applied by the component in denying the request;

(3) An estimate of the volume of records or information withheld, in number of pages or in some other reasonable form of estimation. This estimate does not need to be provided if the volume is otherwise indicated through deletions on records disclosed in part, or if providing an estimate would harm an interest protected by an applicable exemption; and

(4) A statement that the denial may be appealed under § 1600.8(a) and a description of the requirements for appeal.

§ 1600.6 Disclosure of requested records.

(a) The Foundation shall make requested records available to the public to the greatest extent possible in keeping with the FOIA, except that the following records are exempt from the disclosure requirements:

(1) Records specifically authorized under criteria established by an Executive order to be kept secret in the interest of national defense or foreign policy and which are, in fact, properly classified pursuant to such Executive order;

(2) Records related solely to the internal personnel rules and practices of the Foundation;

(3) Records specifically exempted from disclosure by statute (other than 5 U.S.C. 552(b)), provided that such statute requires that the matters be withheld from the public in such a manner as to leave no discretion on the issue or that the statute establishes particular criteria for withholding information or refers to particular types of matters to be withheld. An example that applies to the Foundation is the confidentiality protection for dispute resolution communications provided by the Administrative Dispute Resolution Act of 1996 (ADRA, 5 U.S.C. 571–574).

(4) Records containing trade secrets and commercial or financial information obtained from a person and privileged or confidential;

(5) Interagency or intra-agency memoranda or letters which would not be available by law to a party other than an agency in litigation with the Foundation;

(6) Personnel and medical files and similar files the disclosure of which would constitute a clearly unwarranted invasion of personal privacy;

(7) Records or information compiled for law enforcement purposes, but only to the extent that the production of such law enforcement records or information:

(i) could reasonably be expected to interfere with enforcement proceedings;

(ii) would deprive a person of a right to a fair trial or an impartial adjudication;

(iii) could reasonably be expected to constitute an unwarranted invasion of personal privacy;

(iv) could reasonably be expected to disclose the identity of a confidential source, including a State, local or foreign agency or authority or any private institution which furnished information on a confidential basis, and in the case of a recorded or information compiled by criminal law enforcement authority in the course of a criminal investigation or by an agency conducting a lawful national security intelligence investigation, information furnished by a confidential source;

(v) would disclose techniques and procedures for law enforcement investigations or prosecutions, or would disclose guidelines for law enforcement investigations or prosecutions if such disclosure could reasonably be expected to risk circumvention of the law; or

(vi) could reasonably be expected to endanger the life or physical safety of any individual.

(8) Records contained in or related to examination, operating, or condition reports prepared by, or on behalf of, or for the use of an agency responsible for the regulation or supervision of financial institutions;

(9) Geological or geophysical information and data, including maps, concerning wells.

(b) If a requested record contains exempted material along with nonexempted material, all reasonable segregable nonexempt material shall be disclosed.

(c) Even if an exemption described in paragraph (a) of this section may be reasonably applicable to a requested record, or portion thereof, the Foundation may elect under the circumstances of any particular request not to apply the exemption to such requested record, or portion thereof, subject to the provisions in § 1600.7 for confidential commercial information. The fact that the exemption is not applied by the Foundation to any requested

record, or portion thereof, has no precedential significance as to the application or non-application of the exemption to any other requested record, or portion thereof, no matter when the request is received.

§ 1600.7 Special procedures for confidential commercial information.

(a) *Definitions.* For purposes of this section:

(1) *Business submitter* means any person or entity which provides confidential commercial information, directly or indirectly, to the Foundation and who has a proprietary interest in the information.

(2) *Commercial-use requester* means requesters seeking information for a use or purpose that furthers the commercial, trade, or profit interests of the requester or the person on whose behalf the request is made. In determining whether a requester properly belongs in this category, the Foundation shall determine, whenever reasonably possible, the use to which a requester will put the documents requested. Where the Foundation has reasonable cause to doubt the use to which a requester will put the records sought, or where that use is not clear from the request itself, the Foundation shall seek additional clarification before assigning the request to a specific category.

(3) *Confidential commercial information* means records provided to the government by a submitter that arguably contain material exempt from disclosure under Exemption 4 of the FOIA, because disclosure could reasonably be expected to cause substantial competitive harm.

(b) *In general.* Confidential commercial information provided to the Foundation by a business submitter shall not be disclosed pursuant to an FOIA request except in accordance with this section.

(c) *Designation of business information.* Business submitters should use good-faith efforts to designate, by appropriate markings, either at the time of submission or at a reasonable time thereafter, those portions of their submissions which they deem to be protected under Exemption 4 of the FOIA, 5 U.S.C. 552(b)(4). Any such designation will expire 10 years after the records were submitted to the government, unless the submitter requests, and provides reasonable justification for, a designation period of longer duration.

(d) *Predisclosure notification.* (1) Except as is provided for in paragraph (i) of this section, the Foundation shall, to the extent permitted by law, provide a submitter with prompt written notice of an FOIA request or administrative appeal encompassing its confidential business information whenever required under paragraph (e) of this section. Such notice shall either describe the exact nature of the business information requested or provide copies of the records or portions thereof containing the business information.

(2) Whenever the Foundation provides a business submitter with the notice set forth in paragraph (e)(1) of this section, the Foundation shall notify the requester that the request includes information that may arguably be exempt from disclosure under Exemption 4 of the FOIA and that the person or entity who submitted the information to the Foundation has been given the opportunity to comment on the proposed disclosure of information.

(e) *When notice is required.* The Foundation shall provide a business submitter with notice of a request whenever—

(1) The business submitter has in good faith designated the information as business information deemed protected from disclosure under 5 U.S.C. 552(b)(4); or

(2) The Foundation has reason to believe that the request seeks business information the disclosure of which may result in substantial commercial or financial injury to the business submitter.

(f) *Opportunity to object to disclosure.* Through the notice described in paragraph (d) of this section, the Foundation shall, to the extent permitted by law, afford a business submitter at least 10 working days within which it can provide the Foundation with a detailed written statement of any objection to disclosure. Such statement shall demonstrate why the information is contended to be a trade secret or commercial or financial information that is privileged or confidential and

why disclosure would cause competitive harm. Whenever possible, the business submitter's claim of confidentiality should be supported by a statement or certification by an officer or authorized representative of the business submitter. Information provided by a submitter pursuant to this paragraph may itself be subject to disclosure under the FOIA.

(g) *Notice of intent to disclose.* (1) The Foundation shall consider carefully a business submitter's objections and specific grounds for nondisclosure prior to determining whether to disclose confidential commercial business information. Whenever the Foundation decides to disclose such information over the objection of a business submitter, the Foundation shall forward to the business submitter a written notice at least 10 working days before the date of disclosure containing—

(i) A statement of the reasons for which the business submitter's disclosure objections were not sustained,

(ii) A description of the confidential commercial information to be disclosed, and

(iii) A specified disclosure date.

(2) Such notice of intent to disclose likewise shall be forwarded to the requester at least 10 working days prior to the specified disclosure date.

(h) *Notice of FOIA lawsuit.* Whenever a requester brings suit seeking to compel disclosure of confidential commercial information, the Foundation shall promptly notify the business submitter of such action.

(i) *Exceptions to predisclosure notification.* The requirements of this section shall not apply if—

(1) The Foundation determines that the information should not be disclosed;

(2) The information lawfully has been published or has been officially made available to the public;

(3) Disclosure of the information is required by law (other than 5 U.S.C. 552); or

(4) The designation made by the submitter in accordance with paragraph (c) of this section appears obviously frivolous; except that, in such a case, the Foundation will provide the submitter with written notice of any final decision to disclose confidential commercial information within a reasonable number of days prior to a specified disclosure date.

§ 1600.8 Appeals.

(a) *Appeals of adverse determinations.* If you are dissatisfied with the Foundation's response to your request, you may appeal an adverse determination denying your request, in any respect, to the Executive Director of the Foundation, 110 S. Church Avenue, Suite 3350, Tucson, AZ 85701–1650. You must make your appeal in writing, and it must be received by the Executive Director within 60 days of the date of the letter denying your request. Your appeal letter may include as much or as little related information as you wish, as long as it clearly identifies the determination (including the assigned request number, if known) that you are appealing. For the quickest possible handling, you should mark your appeal letter and the envelope ''Freedom of Information Act Appeal.''

(b) *Responses to appeals.* The decision on your appeal will be made in writing. A decision affirming an adverse determination in whole or in part shall contain a statement of the reason(s) for the affirmance, including any FOIA exemption(s) applied, and will inform you of the FOIA provisions for court review of the decision. If the adverse determination is reversed or modified on appeal, in whole or in part, you will be notified in a written decision and your request will be reprocessed in accordance with that appeal decision.

(c) *When appeal is required.* If you wish to seek review by a court of any adverse determination, you must first appeal it under this section.

§ 1600.9 Preservation of records.

The Foundation will preserve all correspondence pertaining to the requests that it receives under this subpart, as well as copies of all requested records, until disposition or destruction is authorized by title 44 of the United States Code or the National Archives and Records Administration's General Records Schedule 14. Records will not be disposed of while they are the subject of a pending request, appeal, or lawsuit under the FOIA.

§ 1600.10 Fees.

(a) *In general*. The Foundation will charge you for processing requests under the FOIA in accordance with paragraph (c) of this section, except where fees are limited under paragraph (d) of this section or where a waiver or reduction of fees is granted under paragraph (i) of this section. The Foundation ordinarily will collect all applicable fees before sending copies of requested records to you. You must pay fees by check or money order made payable to the United States Treasury.

(b) *Definitions*. For purposes of this section:

(1) *Commercial use request* means a request from or on behalf of a person seeking information for a use or purpose that furthers his or her commercial, trade, or profit interests, which can include furthering those interests through litigation. If the Foundation determines that you will put the records to a commercial use, either because of the nature of your request itself or because the Foundation has reasonable cause to doubt your stated use, the Foundation will provide you a reasonable opportunity to submit further clarification.

(2) *Direct costs* means those expenses that the Foundation actually incurs in searching for and duplicating (and, in the case of commercial use requests, reviewing) records to respond to a FOIA request. Direct costs include, for example, the salary of the employee performing the work and the cost of operating duplication machinery.

(3) *Duplication* means the process of making a copy of a record, or the information contained in it, available in response to a FOIA request. Copies can take the form of paper, microfilm, audiovisual materials, or electronic records (for example, magnetic tape or disk), among others. The Foundation will honor your specified preference of form or format of disclosure if the record is readily reproducible with reasonable efforts in the requested form or format.

(4) *Educational institution* means a preschool, a public or private elementary or secondary school, an institution of undergraduate or graduate higher education, an institution of professional education, and an institution of vocational education, which operates a program or programs of scholarly research.

(5) *Noncommercial scientific institution* means an institution that is not operated on a ''commercial'' basis, as that term is defined in paragraph (b)(1) of this section, and that is operated solely for the purpose of conducting scientific research, the results of which are not intended to promote any particular product or industry. To be in this category, a requester must show that the request is authorized by and is made under the auspices of a qualifying institution and that the records are not sought for a commercial use but are sought to further scientific research.

(6) *Representative of the news media*, or *news media requester*, means any person actively gathering news for an entity that is organized and operated to publish or broadcast news to the public. The term *news* means information that is about current events or that would be of current interest to the public. Examples of news media entities include television or radio stations broadcasting to the public at large and publishers of periodicals (but only in those instances where they can qualify as disseminators of *news*) who make their products available for purchase or subscription by the general public. For *freelance* journalists to be regarded as working for a news organization, they must demonstrate a solid basis for expecting publication through that organization. A publication contract would be the clearest proof, but the Foundation shall also look to the past publication record of a requester in making this determination. To be in this category, a requester must not be seeking the requested records for a commercial use. However, a request for records supporting the news-dissemination function of the requester shall not be considered to be for a commercial use.

(7) *Review* means the examination of a record located in response to a request in order to determine whether any portion of it is exempt from disclosure. It also includes processing any record for disclosure—for example, doing all that is necessary to redact it and prepare it for disclosure. Review costs are recoverable even if a record ultimately is not disclosed. Review

time does not include time spent resolving general legal or policy issues regarding the application of exemptions.

(8) *Search* means the process of looking for and retrieving records or information responsive to a request. It includes page-by-page or line-by-line identification of information within records and also includes reasonable efforts to locate and retrieve information from records maintained in electronic form or format.

(c) *Fees*. In responding to FOIA requests, the Foundation will charge the following fees unless a waiver or reduction of fees has been granted under paragraph (i) of this section:

(1) *Search*. Search fees will be charged for all requests, except for those by educational institutions, noncommercial scientific institutions, or representatives of the news media (subject to the limitations of paragraph (d) of this section). Charges may be made for time spent searching even if no responsive record is located or if the record(s) are withheld as entirely exempt from disclosure.

(2) *Duplication*. Duplication fees will be charged for all requests, subject to the limitations of paragraph (d) of this section. For a paper photocopy of a record, the fee will be ten cents per page. For other forms of duplication (including copies produced by computer, such as tapes or printouts), the Foundation will charge the direct costs, including operator time, of producing the copy.

(3) *Review*. Review fees will be charged only for commercial use requests. Review fees will be charged only for the initial record review—in other words, the review done when the Foundation determines whether an exemption applies to a particular record or record portion at the initial request level. No charge will be made for review at the administrative appeal level for an exemption already applied. However, records or record portions withheld under an exemption that is subsequently determined not to apply may be reviewed again to determine whether any other exemption not previously considered applies; the costs of that review are chargeable where it is made necessary by such a change of circumstances.

(4) *Searches and reviews—amounts of fees*. (i) For each quarter hour spent in searching for and/or reviewing a requested record, the fees will be: $4.00 for clerical personnel; $7.00 for professional personnel; and $10.25 for managerial personnel.

(ii) For computer searches of records, you will be charged the direct costs of conducting the search, although certain requesters (as provided in paragraph (d)(1) of this section) will be charged no search fee and certain other requesters (as provided in paragraph (d)(4) of this section) will be entitled to the cost equivalent of two hours of manual search time without charge. These direct costs will include the cost of operating a central processing unit for that portion of operating time that is directly attributable to searching for responsive records, as well as the costs of operator/programmer salary apportionable to the search.

(d) *Limitations on charging fees*. (1) No search fee will be charged for requests by educational institutions, noncommercial scientific institutions, or representatives of the news media.

(2) Review fees will be charged only for commercial use requests.

(3) No search fee or review fee will be charged for a quarter-hour period unless more than half of that period is required for search or review.

(4) Except for commercial use requests, the Foundation will provide the first 100 pages of duplication and the first two hours of search time to requesters without charge. These provisions work together, so that the Foundation will not begin to assess fees until after providing the free search and reproduction. For example, if a request involves three hours of search time and duplication of 105 pages of documents, the Foundation will charge only for the cost of one hour of search time and five pages of reproduction.

(5) Whenever a total fee calculated under paragraph (d) of this section is $14.00 or less for any request, no fee will be charged.

(e) *Notice of anticipated fees in excess of $25.00*. When the Foundation determines or estimates that the fees will be more than $25.00, it will notify you of

the actual or estimated amount of the fees, unless you have indicated a willingness to pay fees as high as those anticipated. If only a portion of the fee can be estimated readily, the Foundation will advise you that the estimated fee may be only a portion of the total fee. In cases in which you have been notified that actual or estimated fees amount to more than $25.00, the request will not be considered received and further work will not be done on it until you agree in writing to pay the anticipated total fee. A notice under this paragraph will offer you an opportunity to discuss the matter with Foundation personnel in order to reformulate the request to meet your needs at a lower cost.

(f) *Charging interest.* The Foundation may charge interest on any unpaid bill starting on the 31st day following the date of billing. Interest charges will be assessed at the rate provided in 31 U.S.C. 3717 and will accrue from the date of the billing until payment is received by the Foundation.

(g) *Aggregating requests.* Where the Foundation reasonably believes that a requester or a group of requesters acting together is attempting to divide a request into a series of requests for the purpose of avoiding fees, it may aggregate those requests and charge accordingly. The Foundation may presume that multiple requests of this type made within a 30-day period have been made in order to avoid fees. Where requests are separated by a longer period, they will be aggregated only if there exists a solid basis for determining that aggregation is warranted under all the circumstances involved. Multiple requests involving unrelated matters will not be aggregated.

(h) *Advance payments.* (1) No advance payment (that is, payment before work is begun on a request) will ordinarily be required, except as described in paragraphs (h)(2) and (3) of this section. Payment owed for work already completed (that is, a prepayment before copies are sent to you) is not considered an advance payment.

(2) Where the Foundation determines or estimates that a total fee to be charged under this section will be more than $250.00, it may require you to make an advance payment of an amount up to the amount of the entire anticipated fee before beginning to process the request, except where it receives satisfactory assurance of full payment from you and you have a history of prompt payment.

(3) If you have previously failed to pay a properly charged FOIA fee within 30 days of the date of billing, the Foundation may require you to pay the full amount due, plus any applicable interest, and to make an advance payment of the full amount of any anticipated fee, before it begins to process a new request or continues to process a pending request from you.

(4) In cases in which the Foundation requires advance payment or payment due under paragraph (h)(2) or (3) of this section, the request shall not be considered received and further work will not be done on it until the required payment is received.

(i) *Requirements for waiver or reduction of fees.* (1) Records responsive to a request will be furnished without charge or at a charge reduced below that established under paragraph (c) of this section where the Foundation determines, based on all available information, that the requester has demonstrated that:

(i) Disclosure of the requested information is in the public interest because it is likely to contribute significantly to public understanding of the operations or activities of the government, and

(ii) Disclosure of the information is not primarily in the commercial interest of the requester.

(2) Where only some of the records to be released satisfy the requirements for a waiver of fees, a waiver will be granted for those records.

(3) If you request a waiver or reduction of fees, your request should address the factors listed in paragraph (i)(1) of this section.

Subpart B—Protection of Privacy and Access to Individual Records Under the Privacy Act of 1974

§ 1600.21 General provisions.

(a) *Purpose and scope.* This subpart contains the rules that the Morris K. Udall Scholarship and Excellence in

National Environmental Policy Foundation (the ''Foundation'') follows under the Privacy Act of 1974, 5 U.S.C. 552a. These rules should be read together with the Privacy Act, which provides additional information about records maintained on individuals. The rules in this subpart apply to all records in systems of records maintained by the Foundation that are retrieved by an individual's name or personal identifier. They describe the procedures by which individuals may request access to records about themselves, request amendment or correction of those records, and request an accounting of disclosures of those records by the Foundation. In addition, the Foundation processes all Privacy Act requests for access to records under the Freedom of Information Act (FOIA), 5 U.S.C. 552, following the rules contained in subpart A of this part, which gives requests the benefit of both statutes.

(b) *Applicability*. This subpart applies to all Foundation programs, including the U.S. Institute for Environmental Conflict Resolution (USIECR).

(c) *Definitions*. As used in this subpart:

(1) *Request for access to a record means a request* made under Privacy Act subsection (d)(1).

(2) *Request for amendment or correction of a record* means a request made under Privacy Act subsection (d)(2).

(3) *Request for an accounting* means a request made under Privacy Act subsection (c)(3).

(4) *Requester* means an individual who makes a request for access, a request for amendment or correction, or a request for an accounting under the Privacy Act.

§ 1600.22 Requests for access to records.

(a) *How made and addressed*. You may make a request for access to a Foundation record about yourself by appearing in person or by writing to the Foundation. Your request should be sent or delivered to the Foundation's General Counsel, at 110 S. Church Avenue, Suite 3350, Tucson, AZ 85701–1650. For the quickest possible handling, you should mark both your request letter and the envelope ''Privacy Act Request.''

(b) *Description of records sought*. You must describe the records that you want in enough detail to enable Foundation personnel to locate the system of records containing them with a reasonable amount of effort. Whenever possible, your request should describe the records sought, the time periods in which you believe they were compiled, and the name or identifying number of each system of records in which you believe they are kept. The Foundation publishes notices in the FEDERAL REGISTER that describe its systems of records. A description of the Foundation's systems of records also may be found as part of the ''Privacy Act Compilation'' published by the National Archives and Records Administration's Office of the Federal Register. This compilation is available in most large reference and university libraries. This compilation also can be accessed electronically at the Government Printing Office's World Wide Web site (which can be found at *http://www.access.gpo.gov/su_docs*).

(c) *Agreement to pay fees*. If you make a Privacy Act request for access to records, it shall be considered an agreement by you to pay all applicable fees charged under § 1600.29 up to $25.00. The Foundation ordinarily will confirm this agreement in an acknowledgment letter. When making a request, you may specify a willingness to pay a greater or lesser amount.

(d) *Verification of identity*. When you make a request for access to records about yourself, you must verify your identity. You must state your full name, current address, and date and place of birth. You must sign your request and your signature must either be notarized or submitted by you under 28 U.S.C. 1746, a law that permits statements to be made under penalty of perjury as a substitute for notarization. In order to help the identification and location of requested records, you may also, at your option, include your social security number.

(e) *Verification of guardianship*. When making a request as the parent or guardian of a minor or as the guardian of someone determined by a court to be incompetent, for access to records

about that individual, you must establish:

(1) The identity of the individual who is the subject of the record, by stating the name, current address, date and place of birth, and, at your option, the social security number of the individual;

(2) Your own identity, as required in paragraph (d) of this section;

(3) That you are the parent or guardian of that individual, which you may prove by providing a copy of the individual's birth certificate showing your parentage or by providing a court order establishing your guardianship; and (4) That you are acting on behalf of that individual in making the request.

§ 1600.23 Responsibility for responding to requests for access to records.

(a) *In general.* In determining which records are responsive to a request, the Foundation ordinarily will include only those records in its possession as of the date the Foundation begins its search for them. If any other date is used, the Foundation will inform the requester of that date.

(b) *Authority to grant or deny requests.* The Foundation's General Counsel, or his/her designee, is authorized to grant or deny any request for access to a record of the Foundation.

(c) *Consultations and referrals.* When the Foundation receives a request for access to a record in its possession, it will determine whether another agency of the Federal Government is better able to determine whether the record is exempt from access under the Privacy Act. If the Foundation determines that it is best able to process the record in response to the request, then it will do so. If the Foundation determines that it is not best able to process the record, then it will either:

(1) Respond to the request regarding that record, after consulting with the agency best able to determine whether the record is exempt from access and with any other agency that has a substantial interest in it; or (2) Refer the responsibility for responding to the request regarding that record to another agency that originated the record (but only if that agency is subject to the Privacy Act). Ordinarily, the agency that originated a record will be presumed to be best able to determine whether it is exempt from access.

(d) *Notice of referral.* Whenever the Foundation refers all or any part of the responsibility for responding to your request to another agency, it ordinarily will notify you of the referral and inform you of the name of each agency to which the request has been referred and of the part of the request that has been referred.

(e) *Timing of responses to consultations and referrals.* All consultations and referrals shall be handled according to the date the Privacy Act access request was initially received by the Foundation, not any later date.

§ 1600.24 Responses to requests for access to records.

(a) *Acknowledgments of requests.* On receipt of your request, the Foundation ordinarily will send an acknowledgment letter, which shall confirm your agreement to pay fees under § 1600.22(c) and may provide an assigned request number for further reference.

(b) *Grants of requests for access.* Once the Foundation makes a determination to grant your request for access in whole or in part, it will notify you in writing. The Foundation will inform you in the notice of any fee charged under § 1600.29 and will disclose records to you promptly on payment of any applicable fee. If your request is made in person, the Foundation may disclose records to you directly, in a manner not unreasonably disruptive of its operations, on payment of any applicable fee and with a written record made of the grant of the request. If you are accompanied by another person when you make a request in person, you shall be required to authorize in writing any discussion of the records in the presence of the other person.

(c) *Adverse determinations of requests for access.* If the Foundation makes an adverse determination denying your request for access in any respect, it will notify you of that determination in writing. Adverse determinations, or denials of requests, consist of: a determination to withhold any requested record in whole or in part; a determination that a requested record does not exist or cannot be located; a determination that what has been requested

is not a record subject to the Privacy Act; a determination on any disputed fee matter; and a denial of a request for expedited treatment. The notification letter shall be signed by the General Counsel, or his/her designee, and shall include:

(1) The name and title or position of the person responsible for the denial;

(2) A brief statement of the reason(s) for the denial, including any Privacy Act exemption(s) applied by the Foundation in denying the request; and

(3) A statement that the denial may be appealed under §1600.25(a) and a description of the requirements of §1600.25(a).

§1600.25 Appeals from denials of requests for access to records.

(a) *Appeals.* If you are dissatisfied with the Foundation's response to your request for access to records, you may appeal an adverse determination denying your request in any respect to the Executive Director of the Foundation, 110 S. Church Avenue, Suite 3350, Tucson, AZ 85701–1650. You must make your appeal in writing, and it must be received within 60 days of the date of the letter denying your request. Your appeal letter may include as much or as little related information as you wish, as long as it clearly identifies the determination (including the assigned request number, if any) that you are appealing. For the quickest possible handling, you should mark both your appeal letter and the envelope ''Privacy Act Appeal.''

(b) *Responses to appeals.* The decision on your appeal will be made in writing. A decision affirming an adverse determination in whole or in part will include a brief statement of the reason(s) for the affirmance, including any Privacy Act exemption applied, and will inform you of the Privacy Act provisions for court review of the decision. If the adverse determination is reversed or modified on appeal in whole or in part, you will be notified in a written decision and your request will be reprocessed in accordance with that appeal decision.

(c) *When appeal is required.* If you wish to seek review by a court of any adverse determination or denial of a request, you must first appeal it under this section.

§1600.26 Requests for amendment or correction of records.

(a) *How made and addressed.* You may make a request for amendment or correction of a Foundation record about yourself by following the procedures in §1600.22. Your request should identify each particular record in question, state the amendment or correction that you want, and state why you believe that the record is not accurate, relevant, timely, or complete. You may submit any documentation that you think would be helpful.

(b) *Foundation responses.* Within 10 working days of receiving your request for amendment or correction of records, the Foundation will send you a written acknowledgment of its receipt of your request, and it will promptly notify you whether your request is granted or denied. If the Foundation grants your request in whole or in part, it will describe the amendment or correction made and advise you of your right to obtain a copy of the corrected or amended record. If the Foundation denies your request in whole or in part, it will send you a letter stating:

(1) The reason(s) for the denial; and

(2) The procedure for appeal of the denial under paragraph (c) of this section, including the name and business address of the official who will act on your appeal.

(c) *Appeals.* You may appeal a denial of a request for amendment or correction to the Executive Director in the same manner as a denial of a request for access to records (see §1600.25), and the same procedures will be followed. If your appeal is denied, you will be advised of your right to file a Statement of Disagreement as described in paragraph (d) of this section and of your right under the Privacy Act for court review of the decision.

(d) *Statements of Disagreement.* If your appeal under this section is denied in whole or in part, you have the right to file a Statement of Disagreement that states your reason(s) for disagreeing with the Foundation's denial of your request for amendment or correction. Statements of Disagreement must be concise, must clearly identify each

part of any record that is disputed, and should be no longer than one typed page for each fact disputed. Your Statement of Disagreement must be sent to the Foundation, which will place it in the system of records in which the disputed record is maintained and will mark the disputed record to indicate that a Statement of Disagreement has been filed and where in the system of records it may be found.

(e) *Notification of amendment/correction or disagreement*. Within 30 working days of the amendment or correction of a record, the Foundation shall notify all persons, organizations, or agencies to which it previously disclosed the record, if an accounting of that disclosure was made, that the record has been amended or corrected. If an individual has filed a Statement of Disagreement, the Foundation will attach a copy of it to the disputed record whenever the record is disclosed and may also attach a concise statement of its reason(s) for denying the request to amend or correct the record.

§ 1600.27 Requests for an accounting of record disclosures.

(a) *How made and addressed*. Except where accountings of disclosures are not required to be kept (as stated in paragraph (b) of this section), you may make a request for an accounting of any disclosure that has been made by the Foundation to another person, organization, or agency of any record about you. This accounting contains the date, nature, and purpose of each disclosure, as well as the name and address of the person, organization, or agency to which the disclosure was made. Your request for an accounting should identify each particular record in question and should be made by writing to the Foundation, following the procedures in § 1600.22.

(b) *Where accountings are not required*. The Foundation is not required to provide accountings to you where they relate to disclosures for which accountings are not required to be kept—in other words, disclosures that are made to employees within the agency and disclosures that are made under the FOIA.

(c) *Appeals*. You may appeal a denial of a request for an accounting to the Foundation Executive Director in the same manner as a denial of a request for access to records (see § 1600.25) and the same procedures will be followed.

§ 1600.28 Preservation of records.

The Foundation will preserve all correspondence pertaining to the requests that it receives under this subpart, as well as copies of all requested records, until disposition or destruction is authorized by title 44 of the United States Code or the National Archives and Records Administration's General Records Schedule 14. Records will not be disposed of while they are the subject of a pending request, appeal, or lawsuit under the Act.

§ 1600.29 Fees.

The Foundation will charge fees for duplication of records under the Privacy Act in the same way in which it charges duplication fees under § 1600.10. No search or review fee will be charged for any record.

§ 1600.30 Notice of court-ordered and emergency disclosures.

(a) *Court-ordered disclosures*. When a record pertaining to an individual is required to be disclosed by a court order, the Foundation will make reasonable efforts to provide notice of this to the individual. Notice will be given within a reasonable time after the Foundation's receipt of the order—except that in a case in which the order is not a matter of public record, the notice will be given only after the order becomes public. This notice will be mailed to the individual's last known address and will contain a copy of the order and a description of the information disclosed.

(b) *Emergency disclosures*. Upon disclosing a record pertaining to an individual made under compelling circumstances affecting health or safety, the Foundation will notify that individual of the disclosure. This notice will be mailed to the individual's last known address and will state the nature of the information disclosed; the person, organization, or agency to

which it was disclosed; the date of disclosure; and the compelling circumstances justifying the disclosure.

PARTS 1601–1699 [RESERVED]

FINDING AIDS

A list of CFR titles, subtitles, chapters, subchapters and parts and an alphabetical list of agencies publishing in the CFR are included in the CFR Index and Finding Aids volume to the Code of Federal Regulations which is published separately and revised annually.

Table of CFR Titles and Chapters
Alphabetical List of Agencies Appearing in the CFR
List of CFR Sections Affected

Table of CFR Titles and Chapters

(Revised as of July 1, 2015)

Title 1—General Provisions

I Administrative Committee of the Federal Register (Parts 1—49)
II Office of the Federal Register (Parts 50—299)
III Administrative Conference of the United States (Parts 300—399)
IV Miscellaneous Agencies (Parts 400—500)

Title 2—Grants and Agreements

SUBTITLE A—OFFICE OF MANAGEMENT AND BUDGET GUIDANCE FOR GRANTS AND AGREEMENTS
I Office of Management and Budget Governmentwide Guidance for Grants and Agreements (Parts 2—199)
II Office of Management and Budget Guidance (Parts 200—299)
SUBTITLE B—FEDERAL AGENCY REGULATIONS FOR GRANTS AND AGREEMENTS
III Department of Health and Human Services (Parts 300—399)
IV Department of Agriculture (Parts 400—499)
VI Department of State (Parts 600—699)
VII Agency for International Development (Parts 700—799)
VIII Department of Veterans Affairs (Parts 800—899)
IX Department of Energy (Parts 900—999)
X Department of the Treasury (Parts 1000—1099)
XI Department of Defense (Parts 1100—1199)
XII Department of Transportation (Parts 1200—1299)
XIII Department of Commerce (Parts 1300—1399)
XIV Department of the Interior (Parts 1400—1499)
XV Environmental Protection Agency (Parts 1500—1599)
XVIII National Aeronautics and Space Administration (Parts 1800—1899)
XX United States Nuclear Regulatory Commission (Parts 2000—2099)
XXII Corporation for National and Community Service (Parts 2200—2299)774
XXIII Social Security Administration (Parts 2300—2399)
XXIV Housing and Urban Development (Parts 2400—2499)
XXV National Science Foundation (Parts 2500—2599)
XXVI National Archives and Records Administration (Parts 2600—2699)
XXVII Small Business Administration (Parts 2700—2799)

Title 2—Grants and Agreements—Continued

Chap.	
XXVIII	Department of Justice (Parts 2800—2899)
XXIX	Department of Labor (Parts 2900—2999)
XXX	Department of Homeland Security (Parts 3000—3099)
XXXI	Institute of Museum and Library Services (Parts 3100—3199)
XXXII	National Endowment for the Arts (Parts 3200—3299)
XXXIII	National Endowment for the Humanities (Parts 3300—3399)
XXXIV	Department of Education (Parts 3400—3499)
XXXV	Export-Import Bank of the United States (Parts 3500—3599)
XXXVI	Office of National Drug Control Policy, Executive Office of the President (Parts 3600—3699)
XXXVII	Peace Corps (Parts 3700—3799)
LVIII	Election Assistance Commission (Parts 5800—5899)
LIX	Gulf Coast Ecosystem Restoration Council (Parts 5900—5999)

Title 3—The President

I	Executive Office of the President (Parts 100—199)

Title 4—Accounts

I	Government Accountability Office (Parts 1—199)

Title 5—Administrative Personnel

I	Office of Personnel Management (Parts 1—1199)
II	Merit Systems Protection Board (Parts 1200—1299)
III	Office of Management and Budget (Parts 1300—1399)
IV	Office of Personnel Management and Office of the Director of National Intelligence (Parts 1400—1499)
V	The International Organizations Employees Loyalty Board (Parts 1500—1599)
VI	Federal Retirement Thrift Investment Board (Parts 1600—1699)
VIII	Office of Special Counsel (Parts 1800—1899)
IX	Appalachian Regional Commission (Parts 1900—1999)
XI	Armed Forces Retirement Home (Parts 2100—2199)
XIV	Federal Labor Relations Authority, General Counsel of the Federal Labor Relations Authority and Federal Service Impasses Panel (Parts 2400—2499)
XVI	Office of Government Ethics (Parts 2600—2699)
XXI	Department of the Treasury (Parts 3100—3199)
XXII	Federal Deposit Insurance Corporation (Parts 3200—3299)
XXIII	Department of Energy (Parts 3300—3399)
XXIV	Federal Energy Regulatory Commission (Parts 3400—3499)
XXV	Department of the Interior (Parts 3500—3599)
XXVI	Department of Defense (Parts 3600—3699)
XXVIII	Department of Justice (Parts 3800—3899)

Title 5—Administrative Personnel—Continued

Chap.	
XXIX	Federal Communications Commission (Parts 3900—3999)
XXX	Farm Credit System Insurance Corporation (Parts 4000—4099)
XXXI	Farm Credit Administration (Parts 4100—4199)
XXXIII	Overseas Private Investment Corporation (Parts 4300—4399)
XXXIV	Securities and Exchange Commission (Parts 4400—4499)
XXXV	Office of Personnel Management (Parts 4500—4599)
XXXVII	Federal Election Commission (Parts 4700—4799)
XL	Interstate Commerce Commission (Parts 5000—5099)
XLI	Commodity Futures Trading Commission (Parts 5100—5199)
XLII	Department of Labor (Parts 5200—5299)
XLIII	National Science Foundation (Parts 5300—5399)
XLV	Department of Health and Human Services (Parts 5500—5599)
XLVI	Postal Rate Commission (Parts 5600—5699)
XLVII	Federal Trade Commission (Parts 5700—5799)
XLVIII	Nuclear Regulatory Commission (Parts 5800—5899)
XLIX	Federal Labor Relations Authority (Parts 5900—5999)
L	Department of Transportation (Parts 6000—6099)
LII	Export-Import Bank of the United States (Parts 6200—6299)
LIII	Department of Education (Parts 6300—6399)
LIV	Environmental Protection Agency (Parts 6400—6499)
LV	National Endowment for the Arts (Parts 6500—6599)
LVI	National Endowment for the Humanities (Parts 6600—6699)
LVII	General Services Administration (Parts 6700—6799)
LVIII	Board of Governors of the Federal Reserve System (Parts 6800—6899)
LIX	National Aeronautics and Space Administration (Parts 6900—6999)
LX	United States Postal Service (Parts 7000—7099)
LXI	National Labor Relations Board (Parts 7100—7199)
LXII	Equal Employment Opportunity Commission (Parts 7200—7299)
LXIII	Inter-American Foundation (Parts 7300—7399)
LXIV	Merit Systems Protection Board (Parts 7400—7499)
LXV	Department of Housing and Urban Development (Parts 7500—7599)
LXVI	National Archives and Records Administration (Parts 7600—7699)
LXVII	Institute of Museum and Library Services (Parts 7700—7799)
LXVIII	Commission on Civil Rights (Parts 7800—7899)
LXIX	Tennessee Valley Authority (Parts 7900—7999)
LXX	Court Services and Offender Supervision Agency for the District of Columbia (Parts 8000—8099)
LXXI	Consumer Product Safety Commission (Parts 8100—8199)
LXXIII	Department of Agriculture (Parts 8300—8399)
LXXIV	Federal Mine Safety and Health Review Commission (Parts 8400—8499)
LXXVI	Federal Retirement Thrift Investment Board (Parts 8600—8699)

Title 5—Administrative Personnel—Continued

Chap.

LXXVII Office of Management and Budget (Parts 8700—8799)

LXXX Federal Housing Finance Agency (Parts 9000—9099)

LXXXIII Special Inspector General for Afghanistan Reconstruction (Parts 9300—9399)

LXXXIV Bureau of Consumer Financial Protection (Parts 9400—9499)

LXXXVI National Credit Union Administration (Parts 9600—9699)

XCVII Department of Homeland Security Human Resources Management System (Department of Homeland Security—Office of Personnel Management) (Parts 9700—9799)

XCVII Council of the Inspectors General on Integrity and Efficiency (Parts 9800—9899)

XCIV Military Compensation and Retirement Modernization Commission (Parts 9900—9999)

Title 6—Domestic Security

I Department of Homeland Security, Office of the Secretary (Parts 1—199)

X Privacy and Civil Liberties Oversight Board (Parts 1000—1099)

Title 7—Agriculture

SUBTITLE A—OFFICE OF THE SECRETARY OF AGRICULTURE (PARTS 0—26)

SUBTITLE B—REGULATIONS OF THE DEPARTMENT OF AGRICULTURE

I Agricultural Marketing Service (Standards, Inspections, Marketing Practices), Department of Agriculture (Parts 27—209)

II Food and Nutrition Service, Department of Agriculture (Parts 210—299)

III Animal and Plant Health Inspection Service, Department of Agriculture (Parts 300—399)

IV Federal Crop Insurance Corporation, Department of Agriculture (Parts 400—499)

V Agricultural Research Service, Department of Agriculture (Parts 500—599)

VI Natural Resources Conservation Service, Department of Agriculture (Parts 600—699)

VII Farm Service Agency, Department of Agriculture (Parts 700—799)

VIII Grain Inspection, Packers and Stockyards Administration (Federal Grain Inspection Service), Department of Agriculture (Parts 800—899)

IX Agricultural Marketing Service (Marketing Agreements and Orders; Fruits, Vegetables, Nuts), Department of Agriculture (Parts 900—999)

X Agricultural Marketing Service (Marketing Agreements and Orders; Milk), Department of Agriculture (Parts 1000—1199)

XI Agricultural Marketing Service (Marketing Agreements and Orders; Miscellaneous Commodities), Department of Agriculture (Parts 1200—1299)

Title 7—Agriculture—Continued

Chap.	
XIV	Commodity Credit Corporation, Department of Agriculture (Parts 1400—1499)
XV	Foreign Agricultural Service, Department of Agriculture (Parts 1500—1599)
XVI	Rural Telephone Bank, Department of Agriculture (Parts 1600—1699)
XVII	Rural Utilities Service, Department of Agriculture (Parts 1700—1799)
XVIII	Rural Housing Service, Rural Business-Cooperative Service, Rural Utilities Service, and Farm Service Agency, Department of Agriculture (Parts 1800—2099)
XX	Local Television Loan Guarantee Board (Parts 2200—2299)
XXV	Office of Advocacy and Outreach, Department of Agriculture (Parts 2500—2599)
XXVI	Office of Inspector General, Department of Agriculture (Parts 2600—2699)
XXVII	Office of Information Resources Management, Department of Agriculture (Parts 2700—2799)
XXVIII	Office of Operations, Department of Agriculture (Parts 2800—2899)
XXIX	Office of Energy Policy and New Uses, Department of Agriculture (Parts 2900—2999)
XXX	Office of the Chief Financial Officer, Department of Agriculture (Parts 3000—3099)
XXXI	Office of Environmental Quality, Department of Agriculture (Parts 3100—3199)
XXXII	Office of Procurement and Property Management, Department of Agriculture (Parts 3200—3299)
XXXIII	Office of Transportation, Department of Agriculture (Parts 3300—3399)
XXXIV	National Institute of Food and Agriculture (Parts 3400—3499)
XXXV	Rural Housing Service, Department of Agriculture (Parts 3500—3599)
XXXVI	National Agricultural Statistics Service, Department of Agriculture (Parts 3600—3699)
XXXVII	Economic Research Service, Department of Agriculture (Parts 3700—3799)
XXXVIII	World Agricultural Outlook Board, Department of Agriculture (Parts 3800—3899)
XLI	[Reserved]
XLII	Rural Business-Cooperative Service and Rural Utilities Service, Department of Agriculture (Parts 4200—4299)

Title 8—Aliens and Nationality

I	Department of Homeland Security (Immigration and Naturalization) (Parts 1—499)
V	Executive Office for Immigration Review, Department of Justice (Parts 1000—1399)

Title 9—Animals and Animal Products

Chap.

I Animal and Plant Health Inspection Service, Department of Agriculture (Parts 1—199)

II Grain Inspection, Packers and Stockyards Administration (Packers and Stockyards Programs), Department of Agriculture (Parts 200—299)

III Food Safety and Inspection Service, Department of Agriculture (Parts 300—599)

Title 10—Energy

I Nuclear Regulatory Commission (Parts 0—199)

II Department of Energy (Parts 200—699)

III Department of Energy (Parts 700—999)

X Department of Energy (General Provisions) (Parts 1000—1099)

XIII Nuclear Waste Technical Review Board (Parts 1300—1399)

XVII Defense Nuclear Facilities Safety Board (Parts 1700—1799)

XVIII Northeast Interstate Low-Level Radioactive Waste Commission (Parts 1800—1899)

Title 11—Federal Elections

I Federal Election Commission (Parts 1—9099)

II Election Assistance Commission (Parts 9400—9499)

Title 12—Banks and Banking

I Comptroller of the Currency, Department of the Treasury (Parts 1—199)

II Federal Reserve System (Parts 200—299)

III Federal Deposit Insurance Corporation (Parts 300—399)

IV Export-Import Bank of the United States (Parts 400—499)

V Office of Thrift Supervision, Department of the Treasury (Parts 500—599)

VI Farm Credit Administration (Parts 600—699)

VII National Credit Union Administration (Parts 700—799)

VIII Federal Financing Bank (Parts 800—899)

IX Federal Housing Finance Board (Parts 900—999)

X Bureau of Consumer Financial Protection (Parts 1000—1099)

XI Federal Financial Institutions Examination Council (Parts 1100—1199)

XII Federal Housing Finance Agency (Parts 1200—1299)

XIII Financial Stability Oversight Council (Parts 1300—1399)

XIV Farm Credit System Insurance Corporation (Parts 1400—1499)

XV Department of the Treasury (Parts 1500—1599)

XVI Office of Financial Research (Parts 1600—1699)

XVII Office of Federal Housing Enterprise Oversight, Department of Housing and Urban Development (Parts 1700—1799)

Title 12—Banks and Banking—Continued

Chap.

XVIII Community Development Financial Institutions Fund, Department of the Treasury (Parts 1800—1899)

Title 13—Business Credit and Assistance

I Small Business Administration (Parts 1—199)

III Economic Development Administration, Department of Commerce (Parts 300—399)

IV Emergency Steel Guarantee Loan Board (Parts 400—499)

V Emergency Oil and Gas Guaranteed Loan Board (Parts 500—599)

Title 14—Aeronautics and Space

I Federal Aviation Administration, Department of Transportation (Parts 1—199)

II Office of the Secretary, Department of Transportation (Aviation Proceedings) (Parts 200—399)

III Commercial Space Transportation, Federal Aviation Administration, Department of Transportation (Parts 400—1199)

V National Aeronautics and Space Administration (Parts 1200—1299)

VI Air Transportation System Stabilization (Parts 1300—1399)

Title 15—Commerce and Foreign Trade

SUBTITLE A—OFFICE OF THE SECRETARY OF COMMERCE (PARTS 0—29)

SUBTITLE B—REGULATIONS RELATING TO COMMERCE AND FOREIGN TRADE

I Bureau of the Census, Department of Commerce (Parts 30—199)

II National Institute of Standards and Technology, Department of Commerce (Parts 200—299)

III International Trade Administration, Department of Commerce (Parts 300—399)

IV Foreign-Trade Zones Board, Department of Commerce (Parts 400—499)

VII Bureau of Industry and Security, Department of Commerce (Parts 700—799)

VIII Bureau of Economic Analysis, Department of Commerce (Parts 800—899)

IX National Oceanic and Atmospheric Administration, Department of Commerce (Parts 900—999)

XI Technology Administration, Department of Commerce (Parts 1100—1199)

XIII East-West Foreign Trade Board (Parts 1300—1399)

XIV Minority Business Development Agency (Parts 1400—1499)

SUBTITLE C—REGULATIONS RELATING TO FOREIGN TRADE AGREEMENTS

Title 15—Commerce and Foreign Trade—Continued

Chap.

XX Office of the United States Trade Representative (Parts 2000—2099)

SUBTITLE D—REGULATIONS RELATING TO TELECOMMUNICATIONS AND INFORMATION

XXIII National Telecommunications and Information Administration, Department of Commerce (Parts 2300—2399)

Title 16—Commercial Practices

I Federal Trade Commission (Parts 0—999)

II Consumer Product Safety Commission (Parts 1000—1799)

Title 17—Commodity and Securities Exchanges

I Commodity Futures Trading Commission (Parts 1—199)

II Securities and Exchange Commission (Parts 200—399)

IV Department of the Treasury (Parts 400—499)

Title 18—Conservation of Power and Water Resources

I Federal Energy Regulatory Commission, Department of Energy (Parts 1—399)

III Delaware River Basin Commission (Parts 400—499)

VI Water Resources Council (Parts 700—799)

VIII Susquehanna River Basin Commission (Parts 800—899)

XIII Tennessee Valley Authority (Parts 1300—1399)

Title 19—Customs Duties

I U.S. Customs and Border Protection, Department of Homeland Security; Department of the Treasury (Parts 0—199)

II United States International Trade Commission (Parts 200—299)

III International Trade Administration, Department of Commerce (Parts 300—399)

IV U.S. Immigration and Customs Enforcement, Department of Homeland Security (Parts 400—599)

Title 20—Employees' Benefits

I Office of Workers' Compensation Programs, Department of Labor (Parts 1—199)

II Railroad Retirement Board (Parts 200—399)

III Social Security Administration (Parts 400—499)

IV Employees' Compensation Appeals Board, Department of Labor (Parts 500—599)

V Employment and Training Administration, Department of Labor (Parts 600—699)

Title 20—Employees' Benefits—Continued

Chap.

VI Office of Workers' Compensation Programs, Department of Labor (Parts 700—799)

VII Benefits Review Board, Department of Labor (Parts 800—899)

VIII Joint Board for the Enrollment of Actuaries (Parts 900—999)

IX Office of the Assistant Secretary for Veterans' Employment and Training Service, Department of Labor (Parts 1000—1099)

Title 21—Food and Drugs

I Food and Drug Administration, Department of Health and Human Services (Parts 1—1299)

II Drug Enforcement Administration, Department of Justice (Parts 1300—1399)

III Office of National Drug Control Policy (Parts 1400—1499)

Title 22—Foreign Relations

I Department of State (Parts 1—199)

II Agency for International Development (Parts 200—299)

III Peace Corps (Parts 300—399)

IV International Joint Commission, United States and Canada (Parts 400—499)

V Broadcasting Board of Governors (Parts 500—599)

VII Overseas Private Investment Corporation (Parts 700—799)

IX Foreign Service Grievance Board (Parts 900—999)

X Inter-American Foundation (Parts 1000—1099)

XI International Boundary and Water Commission, United States and Mexico, United States Section (Parts 1100—1199)

XII United States International Development Cooperation Agency (Parts 1200—1299)

XIII Millennium Challenge Corporation (Parts 1300—1399)

XIV Foreign Service Labor Relations Board; Federal Labor Relations Authority; General Counsel of the Federal Labor Relations Authority; and the Foreign Service Impasse Disputes Panel (Parts 1400—1499)

XV African Development Foundation (Parts 1500—1599)

XVI Japan-United States Friendship Commission (Parts 1600—1699)

XVII United States Institute of Peace (Parts 1700—1799)

Title 23—Highways

I Federal Highway Administration, Department of Transportation (Parts 1—999)

II National Highway Traffic Safety Administration and Federal Highway Administration, Department of Transportation (Parts 1200—1299)

III National Highway Traffic Safety Administration, Department of Transportation (Parts 1300—1399)

Title 24—Housing and Urban Development

Chap.

SUBTITLE A—OFFICE OF THE SECRETARY, DEPARTMENT OF HOUSING AND URBAN DEVELOPMENT (PARTS 0—99)

SUBTITLE B—REGULATIONS RELATING TO HOUSING AND URBAN DEVELOPMENT

I Office of Assistant Secretary for Equal Opportunity, Department of Housing and Urban Development (Parts 100—199)

II Office of Assistant Secretary for Housing-Federal Housing Commissioner, Department of Housing and Urban Development (Parts 200—299)

III Government National Mortgage Association, Department of Housing and Urban Development (Parts 300—399)

IV Office of Housing and Office of Multifamily Housing Assistance Restructuring, Department of Housing and Urban Development (Parts 400—499)

V Office of Assistant Secretary for Community Planning and Development, Department of Housing and Urban Development (Parts 500—599)

VI Office of Assistant Secretary for Community Planning and Development, Department of Housing and Urban Development (Parts 600—699) [Reserved]

VII Office of the Secretary, Department of Housing and Urban Development (Housing Assistance Programs and Public and Indian Housing Programs) (Parts 700—799)

VIII Office of the Assistant Secretary for Housing—Federal Housing Commissioner, Department of Housing and Urban Development (Section 8 Housing Assistance Programs, Section 202 Direct Loan Program, Section 202 Supportive Housing for the Elderly Program and Section 811 Supportive Housing for Persons With Disabilities Program) (Parts 800—899)

IX Office of Assistant Secretary for Public and Indian Housing, Department of Housing and Urban Development (Parts 900—1699)

X Office of Assistant Secretary for Housing—Federal Housing Commissioner, Department of Housing and Urban Development (Interstate Land Sales Registration Program) (Parts 1700—1799)

XII Office of Inspector General, Department of Housing and Urban Development (Parts 2000—2099)

XV Emergency Mortgage Insurance and Loan Programs, Department of Housing and Urban Development (Parts 2700—2799) [Reserved]

XX Office of Assistant Secretary for Housing—Federal Housing Commissioner, Department of Housing and Urban Development (Parts 3200—3899)

XXIV Board of Directors of the HOPE for Homeowners Program (Parts 4000—4099) [Reserved]

XXV Neighborhood Reinvestment Corporation (Parts 4100—4199)

Title 25—Indians

I Bureau of Indian Affairs, Department of the Interior (Parts 1—299)

Title 25—Indians—Continued

Chap.

II Indian Arts and Crafts Board, Department of the Interior (Parts 300—399)

III National Indian Gaming Commission, Department of the Interior (Parts 500—599)

IV Office of Navajo and Hopi Indian Relocation (Parts 700—799)

V Bureau of Indian Affairs, Department of the Interior, and Indian Health Service, Department of Health and Human Services (Part 900)

VI Office of the Assistant Secretary-Indian Affairs, Department of the Interior (Parts 1000—1199)

VII Office of the Special Trustee for American Indians, Department of the Interior (Parts 1200—1299)

Title 26—Internal Revenue

I Internal Revenue Service, Department of the Treasury (Parts 1—End)

Title 27—Alcohol, Tobacco Products and Firearms

I Alcohol and Tobacco Tax and Trade Bureau, Department of the Treasury (Parts 1—399)

II Bureau of Alcohol, Tobacco, Firearms, and Explosives, Department of Justice (Parts 400—699)

Title 28—Judicial Administration

I Department of Justice (Parts 0—299)

III Federal Prison Industries, Inc., Department of Justice (Parts 300—399)

V Bureau of Prisons, Department of Justice (Parts 500—599)

VI Offices of Independent Counsel, Department of Justice (Parts 600—699)

VII Office of Independent Counsel (Parts 700—799)

VIII Court Services and Offender Supervision Agency for the District of Columbia (Parts 800—899)

IX National Crime Prevention and Privacy Compact Council (Parts 900—999)

XI Department of Justice and Department of State (Parts 1100—1199)

Title 29—Labor

SUBTITLE A—OFFICE OF THE SECRETARY OF LABOR (PARTS 0—99)

SUBTITLE B—REGULATIONS RELATING TO LABOR

I National Labor Relations Board (Parts 100—199)

II Office of Labor-Management Standards, Department of Labor (Parts 200—299)

III National Railroad Adjustment Board (Parts 300—399)

Title 29—Labor—Continued

Chap.

IV Office of Labor-Management Standards, Department of Labor (Parts 400—499)

V Wage and Hour Division, Department of Labor (Parts 500—899)

IX Construction Industry Collective Bargaining Commission (Parts 900—999)

X National Mediation Board (Parts 1200—1299)

XII Federal Mediation and Conciliation Service (Parts 1400—1499)

XIV Equal Employment Opportunity Commission (Parts 1600—1699)

XVII Occupational Safety and Health Administration, Department of Labor (Parts 1900—1999)

XX Occupational Safety and Health Review Commission (Parts 2200—2499)

XXV Employee Benefits Security Administration, Department of Labor (Parts 2500—2599)

XXVII Federal Mine Safety and Health Review Commission (Parts 2700—2799)

XL Pension Benefit Guaranty Corporation (Parts 4000—4999)

Title 30—Mineral Resources

I Mine Safety and Health Administration, Department of Labor (Parts 1—199)

II Bureau of Safety and Environmental Enforcement, Department of the Interior (Parts 200—299)

IV Geological Survey, Department of the Interior (Parts 400—499)

V Bureau of Ocean Energy Management, Department of the Interior (Parts 500—599)

VII Office of Surface Mining Reclamation and Enforcement, Department of the Interior (Parts 700—999)

XII Office of Natural Resources Revenue, Department of the Interior (Parts 1200—1299)

Title 31—Money and Finance: Treasury

SUBTITLE A—OFFICE OF THE SECRETARY OF THE TREASURY (PARTS 0—50)

SUBTITLE B—REGULATIONS RELATING TO MONEY AND FINANCE

I Monetary Offices, Department of the Treasury (Parts 51—199)

II Fiscal Service, Department of the Treasury (Parts 200—399)

IV Secret Service, Department of the Treasury (Parts 400—499)

V Office of Foreign Assets Control, Department of the Treasury (Parts 500—599)

VI Bureau of Engraving and Printing, Department of the Treasury (Parts 600—699)

VII Federal Law Enforcement Training Center, Department of the Treasury (Parts 700—799)

VIII Office of International Investment, Department of the Treasury (Parts 800—899)

Title 31—Money and Finance: Treasury—Continued

Chap.

IX Federal Claims Collection Standards (Department of the Treasury—Department of Justice) (Parts 900—999)

X Financial Crimes Enforcement Network, Department of the Treasury (Parts 1000—1099)

Title 32—National Defense

SUBTITLE A—DEPARTMENT OF DEFENSE

I Office of the Secretary of Defense (Parts 1—399)

V Department of the Army (Parts 400—699)

VI Department of the Navy (Parts 700—799)

VII Department of the Air Force (Parts 800—1099)

SUBTITLE B—OTHER REGULATIONS RELATING TO NATIONAL DEFENSE

XII Defense Logistics Agency (Parts 1200—1299)

XVI Selective Service System (Parts 1600—1699)

XVII Office of the Director of National Intelligence (Parts 1700—1799)

XVIII National Counterintelligence Center (Parts 1800—1899)

XIX Central Intelligence Agency (Parts 1900—1999)

XX Information Security Oversight Office, National Archives and Records Administration (Parts 2000—2099)

XXI National Security Council (Parts 2100—2199)

XXIV Office of Science and Technology Policy (Parts 2400—2499)

XXVII Office for Micronesian Status Negotiations (Parts 2700—2799)

XXVIII Office of the Vice President of the United States (Parts 2800—2899)

Title 33—Navigation and Navigable Waters

I Coast Guard, Department of Homeland Security (Parts 1—199)

II Corps of Engineers, Department of the Army (Parts 200—399)

IV Saint Lawrence Seaway Development Corporation, Department of Transportation (Parts 400—499)

Title 34—Education

SUBTITLE A—OFFICE OF THE SECRETARY, DEPARTMENT OF EDUCATION (PARTS 1—99)

SUBTITLE B—REGULATIONS OF THE OFFICES OF THE DEPARTMENT OF EDUCATION

I Office for Civil Rights, Department of Education (Parts 100—199)

II Office of Elementary and Secondary Education, Department of Education (Parts 200—299)

III Office of Special Education and Rehabilitative Services, Department of Education (Parts 300—399)

IV Office of Career, Technical and Adult Education, Department of Education (Parts 400—499)

Title 34—Education—Continued

Chap.

V Office of Bilingual Education and Minority Languages Affairs, Department of Education (Parts 500—599)[Reserved]

VI Office of Postsecondary Education, Department of Education (Parts 600—699)

VII Office of Educational Research and Improvement, Department of Education (Parts 700—799)[Reserved]

SUBTITLE C—REGULATIONS RELATING TO EDUCATION

XI [Reserved]

XII National Council on Disability (Parts 1200—1299)

Title 35 [Reserved]

Title 36—Parks, Forests, and Public Property

I National Park Service, Department of the Interior (Parts 1—199)

II Forest Service, Department of Agriculture (Parts 200—299)

III Corps of Engineers, Department of the Army (Parts 300—399)

IV American Battle Monuments Commission (Parts 400—499)

V Smithsonian Institution (Parts 500—599)

VI [Reserved]

VII Library of Congress (Parts 700—799)

VIII Advisory Council on Historic Preservation (Parts 800—899)

IX Pennsylvania Avenue Development Corporation (Parts 900—999)

X Presidio Trust (Parts 1000—1099)

XI Architectural and Transportation Barriers Compliance Board (Parts 1100—1199)

XII National Archives and Records Administration (Parts 1200—1299)

XV Oklahoma City National Memorial Trust (Parts 1500—1599)

XVI Morris K. Udall Scholarship and Excellence in National Environmental Policy Foundation (Parts 1600—1699)

Title 37—Patents, Trademarks, and Copyrights

I United States Patent and Trademark Office, Department of Commerce (Parts 1—199)

II U.S. Copyright Office, Library of Congress (Parts 200—299)

III Copyright Royalty Board, Library of Congress (Parts 300—399)

IV Assistant Secretary for Technology Policy, Department of Commerce (Parts 400—599)

Title 38—Pensions, Bonuses, and Veterans' Relief

I Department of Veterans Affairs (Parts 0—199)

II Armed Forces Retirement Home (Parts 200—299)

Title 39—Postal Service

Chap.

I United States Postal Service (Parts 1—999)

III Postal Regulatory Commission (Parts 3000—3099)

Title 40—Protection of Environment

I Environmental Protection Agency (Parts 1—1099)

IV Environmental Protection Agency and Department of Justice (Parts 1400—1499)

V Council on Environmental Quality (Parts 1500—1599)

VI Chemical Safety and Hazard Investigation Board (Parts 1600—1699)

VII Environmental Protection Agency and Department of Defense; Uniform National Discharge Standards for Vessels of the Armed Forces (Parts 1700—1799)

VIII Gulf Coast Ecosystem Restoration Council (Parts 1800—1899)

Title 41—Public Contracts and Property Management

SUBTITLE A—FEDERAL PROCUREMENT REGULATIONS SYSTEM [NOTE]

SUBTITLE B—OTHER PROVISIONS RELATING TO PUBLIC CONTRACTS

50 Public Contracts, Department of Labor (Parts 50–1—50–999)

51 Committee for Purchase From People Who Are Blind or Severely Disabled (Parts 51–1—51–99)

60 Office of Federal Contract Compliance Programs, Equal Employment Opportunity, Department of Labor (Parts 60–1—60–999)

61 Office of the Assistant Secretary for Veterans' Employment and Training Service, Department of Labor (Parts 61–1—61–999)

62—100 [Reserved]

SUBTITLE C—FEDERAL PROPERTY MANAGEMENT REGULATIONS SYSTEM

101 Federal Property Management Regulations (Parts 101–1—101–99)

102 Federal Management Regulation (Parts 102–1—102–299)

103—104 [Reserved]

105 General Services Administration (Parts 105–1—105–999)

109 Department of Energy Property Management Regulations (Parts 109–1—109–99)

114 Department of the Interior (Parts 114–1—114–99)

115 Environmental Protection Agency (Parts 115–1—115–99)

128 Department of Justice (Parts 128–1—128–99)

129—200 [Reserved]

SUBTITLE D—OTHER PROVISIONS RELATING TO PROPERTY MANAGEMENT [RESERVED]

SUBTITLE E—FEDERAL INFORMATION RESOURCES MANAGEMENT REGULATIONS SYSTEM [RESERVED]

SUBTITLE F—FEDERAL TRAVEL REGULATION SYSTEM

300 General (Parts 300–1—300–99)

301 Temporary Duty (TDY) Travel Allowances (Parts 301–1—301–99)

Chap.

302 Relocation Allowances (Parts 302–1—302–99)

303 Payment of Expenses Connected with the Death of Certain Employees (Part 303–1—303–99)

304 Payment of Travel Expenses from a Non-Federal Source (Parts 304–1—304–99)

Title 42—Public Health

I Public Health Service, Department of Health and Human Services (Parts 1—199)

IV Centers for Medicare & Medicaid Services, Department of Health and Human Services (Parts 400—599)

V Office of Inspector General-Health Care, Department of Health and Human Services (Parts 1000—1999)

Title 43—Public Lands: Interior

SUBTITLE A—OFFICE OF THE SECRETARY OF THE INTERIOR (PARTS 1—199)

SUBTITLE B—REGULATIONS RELATING TO PUBLIC LANDS

I Bureau of Reclamation, Department of the Interior (Parts 400—999)

II Bureau of Land Management, Department of the Interior (Parts 1000—9999)

III Utah Reclamation Mitigation and Conservation Commission (Parts 10000—10099)

Title 44—Emergency Management and Assistance

I Federal Emergency Management Agency, Department of Homeland Security (Parts 0—399)

IV Department of Commerce and Department of Transportation (Parts 400—499)

Title 45—Public Welfare

SUBTITLE A—DEPARTMENT OF HEALTH AND HUMAN SERVICES (PARTS 1—199)

SUBTITLE B—REGULATIONS RELATING TO PUBLIC WELFARE

II Office of Family Assistance (Assistance Programs), Administration for Children and Families, Department of Health and Human Services (Parts 200—299)

III Office of Child Support Enforcement (Child Support Enforcement Program), Administration for Children and Families, Department of Health and Human Services (Parts 300—399)

IV Office of Refugee Resettlement, Administration for Children and Families, Department of Health and Human Services (Parts 400—499)

V Foreign Claims Settlement Commission of the United States, Department of Justice (Parts 500—599)

Title 45—Public Welfare—Continued

Chap.

VI National Science Foundation (Parts 600—699)

VII Commission on Civil Rights (Parts 700—799)

VIII Office of Personnel Management (Parts 800—899)

X Office of Community Services, Administration for Children and Families, Department of Health and Human Services (Parts 1000—1099)

XI National Foundation on the Arts and the Humanities (Parts 1100—1199)

XII Corporation for National and Community Service (Parts 1200—1299)

XIII Office of Human Development Services, Department of Health and Human Services (Parts 1300—1399)

XVI Legal Services Corporation (Parts 1600—1699)

XVII National Commission on Libraries and Information Science (Parts 1700—1799)

XVIII Harry S. Truman Scholarship Foundation (Parts 1800—1899)

XXI Commission on Fine Arts (Parts 2100—2199)

XXIII Arctic Research Commission (Part 2301)

XXIV James Madison Memorial Fellowship Foundation (Parts 2400—2499)

XXV Corporation for National and Community Service (Parts 2500—2599)

Title 46—Shipping

I Coast Guard, Department of Homeland Security (Parts 1—199)

II Maritime Administration, Department of Transportation (Parts 200—399)

III Coast Guard (Great Lakes Pilotage), Department of Homeland Security (Parts 400—499)

IV Federal Maritime Commission (Parts 500—599)

Title 47—Telecommunication

I Federal Communications Commission (Parts 0—199)

II Office of Science and Technology Policy and National Security Council (Parts 200—299)

III National Telecommunications and Information Administration, Department of Commerce (Parts 300—399)

IV National Telecommunications and Information Administration, Department of Commerce, and National Highway Traffic Safety Administration, Department of Transportation (Parts 400—499)

Title 48—Federal Acquisition Regulations System

1 Federal Acquisition Regulation (Parts 1—99)

2 Defense Acquisition Regulations System, Department of Defense (Parts 200—299)

Title 48—Federal Acquisition Regulations System—Continued

Chap.

3 Health and Human Services (Parts 300—399)

4 Department of Agriculture (Parts 400—499)

5 General Services Administration (Parts 500—599)

6 Department of State (Parts 600—699)

7 Agency for International Development (Parts 700—799)

8 Department of Veterans Affairs (Parts 800—899)

9 Department of Energy (Parts 900—999)

10 Department of the Treasury (Parts 1000—1099)

12 Department of Transportation (Parts 1200—1299)

13 Department of Commerce (Parts 1300—1399)

14 Department of the Interior (Parts 1400—1499)

15 Environmental Protection Agency (Parts 1500—1599)

16 Office of Personnel Management, Federal Employees Health Benefits Acquisition Regulation (Parts 1600—1699)

17 Office of Personnel Management (Parts 1700—1799)

18 National Aeronautics and Space Administration (Parts 1800—1899)

19 Broadcasting Board of Governors (Parts 1900—1999)

20 Nuclear Regulatory Commission (Parts 2000—2099)

21 Office of Personnel Management, Federal Employees Group Life Insurance Federal Acquisition Regulation (Parts 2100—2199)

23 Social Security Administration (Parts 2300—2399)

24 Department of Housing and Urban Development (Parts 2400—2499)

25 National Science Foundation (Parts 2500—2599)

28 Department of Justice (Parts 2800—2899)

29 Department of Labor (Parts 2900—2999)

30 Department of Homeland Security, Homeland Security Acquisition Regulation (HSAR) (Parts 3000—3099)

34 Department of Education Acquisition Regulation (Parts 3400—3499)

51 Department of the Army Acquisition Regulations (Parts 5100—5199)

52 Department of the Navy Acquisition Regulations (Parts 5200—5299)

53 Department of the Air Force Federal Acquisition Regulation Supplement (Parts 5300—5399) [Reserved]

54 Defense Logistics Agency, Department of Defense (Parts 5400—5499)

57 African Development Foundation (Parts 5700—5799)

61 Civilian Board of Contract Appeals, General Services Administration (Parts 6100—6199)

63 Department of Transportation Board of Contract Appeals (Parts 6300—6399)

99 Cost Accounting Standards Board, Office of Federal Procurement Policy, Office of Management and Budget (Parts 9900—9999)

Title 49—Transportation

Chap.

SUBTITLE A—OFFICE OF THE SECRETARY OF TRANSPORTATION (PARTS 1—99)

SUBTITLE B—OTHER REGULATIONS RELATING TO TRANSPORTATION

I Pipeline and Hazardous Materials Safety Administration, Department of Transportation (Parts 100—199)

II Federal Railroad Administration, Department of Transportation (Parts 200—299)

III Federal Motor Carrier Safety Administration, Department of Transportation (Parts 300—399)

IV Coast Guard, Department of Homeland Security (Parts 400—499)

V National Highway Traffic Safety Administration, Department of Transportation (Parts 500—599)

VI Federal Transit Administration, Department of Transportation (Parts 600—699)

VII National Railroad Passenger Corporation (AMTRAK) (Parts 700—799)

VIII National Transportation Safety Board (Parts 800—999)

X Surface Transportation Board, Department of Transportation (Parts 1000—1399)

XI Research and Innovative Technology Administration, Department of Transportation (Parts 1400—1499) [Reserved]

XII Transportation Security Administration, Department of Homeland Security (Parts 1500—1699)

Title 50—Wildlife and Fisheries

I United States Fish and Wildlife Service, Department of the Interior (Parts 1—199)

II National Marine Fisheries Service, National Oceanic and Atmospheric Administration, Department of Commerce (Parts 200—299)

III International Fishing and Related Activities (Parts 300—399)

IV Joint Regulations (United States Fish and Wildlife Service, Department of the Interior and National Marine Fisheries Service, National Oceanic and Atmospheric Administration, Department of Commerce); Endangered Species Committee Regulations (Parts 400—499)

V Marine Mammal Commission (Parts 500—599)

VI Fishery Conservation and Management, National Oceanic and Atmospheric Administration, Department of Commerce (Parts 600—699)

Alphabetical List of Agencies Appearing in the CFR

(Revised as of July 1, 2015)

Agency	CFR Title, Subtitle or Chapter
Administrative Committee of the Federal Register	1, I
Administrative Conference of the United States	1, III
Advisory Council on Historic Preservation	36, VIII
Advocacy and Outreach, Office of	7, XXV
Afghanistan Reconstruction, Special Inspector General for	5, LXXXIII
African Development Foundation	22, XV
Federal Acquisition Regulation	48, 57
Agency for International Development	2, VII; 22, II
Federal Acquisition Regulation	48, 7
Agricultural Marketing Service	7, I, IX, X, XI
Agricultural Research Service	7, V
Agriculture Department	2, IV; 5, LXXIII
Advocacy and Outreach, Office of	7, XXV
Agricultural Marketing Service	7, I, IX, X, XI
Agricultural Research Service	7, V
Animal and Plant Health Inspection Service	7, III; 9, I
Chief Financial Officer, Office of	7, XXX
Commodity Credit Corporation	7, XIV
Economic Research Service	7, XXXVII
Energy Policy and New Uses, Office of	2, IX; 7, XXIX
Environmental Quality, Office of	7, XXXI
Farm Service Agency	7, VII, XVIII
Federal Acquisition Regulation	48, 4
Federal Crop Insurance Corporation	7, IV
Food and Nutrition Service	7, II
Food Safety and Inspection Service	9, III
Foreign Agricultural Service	7, XV
Forest Service	36, II
Grain Inspection, Packers and Stockyards Administration	7, VIII; 9, II
Information Resources Management, Office of	7, XXVII
Inspector General, Office of	7, XXVI
National Agricultural Library	7, XLI
National Agricultural Statistics Service	7, XXXVI
National Institute of Food and Agriculture	7, XXXIV
Natural Resources Conservation Service	7, VI
Operations, Office of	7, XXVIII
Procurement and Property Management, Office of	7, XXXII
Rural Business-Cooperative Service	7, XVIII, XLII, L
Rural Development Administration	7, XLII
Rural Housing Service	7, XVIII, XXXV, L
Rural Telephone Bank	7, XVI
Rural Utilities Service	7, XVII, XVIII, XLII, L
Secretary of Agriculture, Office of	7, Subtitle A
Transportation, Office of	7, XXXIII
World Agricultural Outlook Board	7, XXXVIII
Air Force Department	32, VII
Federal Acquisition Regulation Supplement	48, 53
Air Transportation Stabilization Board	14, VI
Alcohol and Tobacco Tax and Trade Bureau	27, I
Alcohol, Tobacco, Firearms, and Explosives, Bureau of	27, II
AMTRAK	49, VII
American Battle Monuments Commission	36, IV
American Indians, Office of the Special Trustee	25, VII

Agency	CFR Title, Subtitle or Chapter
Animal and Plant Health Inspection Service	7, III; 9, I
Appalachian Regional Commission	5, IX
Architectural and Transportation Barriers Compliance Board	36, XI
Arctic Research Commission	45, XXIII
Armed Forces Retirement Home	5, XI
Army Department	32, V
Engineers, Corps of	33, II; 36, III
Federal Acquisition Regulation	48, 51
Bilingual Education and Minority Languages Affairs, Office of	34, V
Blind or Severely Disabled, Committee for Purchase from People Who Are	41, 51
Broadcasting Board of Governors	22, V
Federal Acquisition Regulation	48, 19
Career, Technical and Adult Education, Office of	34, IV
Census Bureau	15, I
Centers for Medicare & Medicaid Services	42, IV
Central Intelligence Agency	32, XIX
Chemical Safety and Hazardous Investigation Board	40, VI
Chief Financial Officer, Office of	7, XXX
Child Support Enforcement, Office of	45, III
Children and Families, Administration for	45, II, III, IV, X
Civil Rights, Commission on	5, LXVIII; 45, VII
Civil Rights, Office for	34, I
Council of the Inspectors General on Integrity and Efficiency	5, XCVIII
Court Services and Offender Supervision Agency for the District of Columbia	5, LXX
Coast Guard	33, I; 46, I; 49, IV
Coast Guard (Great Lakes Pilotage)	46, III
Commerce Department	2, XIII; 44, IV; 50, VI
Census Bureau	15, I
Economic Analysis, Bureau of	15, VIII
Economic Development Administration	13, III
Emergency Management and Assistance	44, IV
Federal Acquisition Regulation	48, 13
Foreign-Trade Zones Board	15, IV
Industry and Security, Bureau of	15, VII
International Trade Administration	15, III; 19, III
National Institute of Standards and Technology	15, II
National Marine Fisheries Service	50, II, IV
National Oceanic and Atmospheric Administration	15, IX; 50, II, III, IV, VI
National Telecommunications and Information Administration	15, XXIII; 47, III, IV
National Weather Service	15, IX
Patent and Trademark Office, United States	37, I
Productivity, Technology and Innovation, Assistant Secretary for	37, IV
Secretary of Commerce, Office of	15, Subtitle A
Technology Administration	15, XI
Technology Policy, Assistant Secretary for	37, IV
Commercial Space Transportation	14, III
Commodity Credit Corporation	7, XIV
Commodity Futures Trading Commission	5, XLI; 17, I
Community Planning and Development, Office of Assistant Secretary for	24, V, VI
Community Services, Office of	45, X
Comptroller of the Currency	12, I
Construction Industry Collective Bargaining Commission	29, IX
Consumer Financial Protection Bureau	5, LXXXIV; 12, X
Consumer Product Safety Commission	5, LXXI; 16, II
Copyright Royalty Board	37, III
Corporation for National and Community Service	2, XXII; 45, XII, XXV
Cost Accounting Standards Board	48, 99
Council on Environmental Quality	40, V
Court Services and Offender Supervision Agency for the District of Columbia	5, LXX; 28, VIII
Customs and Border Protection	19, I
Defense Contract Audit Agency	32, I

Agency	CFR Title, Subtitle or Chapter
Defense Department	2, XI; 5, XXVI; 32, Subtitle A; 40, VII
Advanced Research Projects Agency	32, I
Air Force Department	32, VII
Army Department	32, V; 33, II; 36, III; 48, 51
Defense Acquisition Regulations System	48, 2
Defense Intelligence Agency	32, I
Defense Logistics Agency	32, I, XII; 48, 54
Engineers, Corps of	33, II; 36, III
National Imagery and Mapping Agency	32, I
Navy Department	32, VI; 48, 52
Secretary of Defense, Office of	2, XI; 32, I
Defense Contract Audit Agency	32, I
Defense Intelligence Agency	32, I
Defense Logistics Agency	32, XII; 48, 54
Defense Nuclear Facilities Safety Board	10, XVII
Delaware River Basin Commission	18, III
District of Columbia, Court Services and Offender Supervision Agency for the	5, LXX; 28, VIII
Drug Enforcement Administration	21, II
East-West Foreign Trade Board	15, XIII
Economic Analysis, Bureau of	15, VIII
Economic Development Administration	13, III
Economic Research Service	7, XXXVII
Education, Department of	2, XXXIV; 5, LIII
Bilingual Education and Minority Languages Affairs, Office of	34, V
Career, Technical and Adult Education, Office of	34, IV
Civil Rights, Office for	34, I
Educational Research and Improvement, Office of	34, VII
Elementary and Secondary Education, Office of	34, II
Federal Acquisition Regulation	48, 34
Postsecondary Education, Office of	34, VI
Secretary of Education, Office of	34, Subtitle A
Special Education and Rehabilitative Services, Office of	34, III
Career, Technical, and Adult Education, Office of	34, IV
Educational Research and Improvement, Office of	34, VII
Election Assistance Commission	2, LVIII; 11, II
Elementary and Secondary Education, Office of	34, II
Emergency Oil and Gas Guaranteed Loan Board	13, V
Emergency Steel Guarantee Loan Board	13, IV
Employee Benefits Security Administration	29, XXV
Employees' Compensation Appeals Board	20, IV
Employees Loyalty Board	5, V
Employment and Training Administration	20, V
Employment Standards Administration	20, VI
Endangered Species Committee	50, IV
Energy, Department of	2, IX; 5, XXIII; 10, II, III, X
Federal Acquisition Regulation	48, 9
Federal Energy Regulatory Commission	5, XXIV; 18, I
Property Management Regulations	41, 109
Energy, Office of	7, XXIX
Engineers, Corps of	33, II; 36, III
Engraving and Printing, Bureau of	31, VI
Environmental Protection Agency	2, XV; 5, LIV; 40, I, IV, VII
Federal Acquisition Regulation	48, 15
Property Management Regulations	41, 115
Environmental Quality, Office of	7, XXXI
Equal Employment Opportunity Commission	5, LXII; 29, XIV
Equal Opportunity, Office of Assistant Secretary for	24, I
Executive Office of the President	3, I
Environmental Quality, Council on	40, V
Management and Budget, Office of	2, Subtitle A; 5, III, LXXVII; 14, VI; 48, 99

Agency	CFR Title, Subtitle or Chapter
National Drug Control Policy, Office of	2, XXXVI; 21, III
National Security Council	32, XXI; 47, 2
Presidential Documents	3
Science and Technology Policy, Office of	32, XXIV; 47, II
Trade Representative, Office of the United States	15, XX
Export-Import Bank of the United States	2, XXXV; 5, LII; 12, IV
Family Assistance, Office of	45, II
Farm Credit Administration	5, XXXI; 12, VI
Farm Credit System Insurance Corporation	5, XXX; 12, XIV
Farm Service Agency	7, VII, XVIII
Federal Acquisition Regulation	48, 1
Federal Aviation Administration	14, I
Commercial Space Transportation	14, III
Federal Claims Collection Standards	31, IX
Federal Communications Commission	5, XXIX; 47, I
Federal Contract Compliance Programs, Office of	41, 60
Federal Crop Insurance Corporation	7, IV
Federal Deposit Insurance Corporation	5, XXII; 12, III
Federal Election Commission	5, XXXVII; 11, I
Federal Emergency Management Agency	44, I
Federal Employees Group Life Insurance Federal Acquisition Regulation	48, 21
Federal Employees Health Benefits Acquisition Regulation	48, 16
Federal Energy Regulatory Commission	5, XXIV; 18, I
Federal Financial Institutions Examination Council	12, XI
Federal Financing Bank	12, VIII
Federal Highway Administration	23, I, II
Federal Home Loan Mortgage Corporation	1, IV
Federal Housing Enterprise Oversight Office	12, XVII
Federal Housing Finance Agency	5, LXXX; 12, XII
Federal Housing Finance Board	12, IX
Federal Labor Relations Authority	5, XIV, XLIX; 22, XIV
Federal Law Enforcement Training Center	31, VII
Federal Management Regulation	41, 102
Federal Maritime Commission	46, IV
Federal Mediation and Conciliation Service	29, XII
Federal Mine Safety and Health Review Commission	5, LXXIV; 29, XXVII
Federal Motor Carrier Safety Administration	49, III
Federal Prison Industries, Inc.	28, III
Federal Procurement Policy Office	48, 99
Federal Property Management Regulations	41, 101
Federal Railroad Administration	49, II
Federal Register, Administrative Committee of	1, I
Federal Register, Office of	1, II
Federal Reserve System	12, II
Board of Governors	5, LVIII
Federal Retirement Thrift Investment Board	5, VI, LXXVI
Federal Service Impasses Panel	5, XIV
Federal Trade Commission	5, XLVII; 16, I
Federal Transit Administration	49, VI
Federal Travel Regulation System	41, Subtitle F
Financial Crimes Enforcement Network	31, X
Financial Research Office	12, XVI
Financial Stability Oversight Council	12, XIII
Fine Arts, Commission on	45, XXI
Fiscal Service	31, II
Fish and Wildlife Service, United States	50, I, IV
Food and Drug Administration	21, I
Food and Nutrition Service	7, II
Food Safety and Inspection Service	9, III
Foreign Agricultural Service	7, XV
Foreign Assets Control, Office of	31, V
Foreign Claims Settlement Commission of the United States	45, V
Foreign Service Grievance Board	22, IX
Foreign Service Impasse Disputes Panel	22, XIV
Foreign Service Labor Relations Board	22, XIV
Foreign-Trade Zones Board	15, IV

Agency	CFR Title, Subtitle or Chapter
Forest Service	36, II
General Services Administration	5, LVII; 41, 105
Contract Appeals, Board of	48, 61
Federal Acquisition Regulation	48, 5
Federal Management Regulation	41, 102
Federal Property Management Regulations	41, 101
Federal Travel Regulation System	41, Subtitle F
General	41, 300
Payment From a Non-Federal Source for Travel Expenses	41, 304
Payment of Expenses Connected With the Death of Certain Employees	41, 303
Relocation Allowances	41, 302
Temporary Duty (TDY) Travel Allowances	41, 301
Geological Survey	30, IV
Government Accountability Office	4, I
Government Ethics, Office of	5, XVI
Government National Mortgage Association	24, III
Grain Inspection, Packers and Stockyards Administration	7, VIII; 9, II
Gulf Coast Ecosystem Restoration Council	2, LIX; 40, VIII
Harry S. Truman Scholarship Foundation	45, XVIII
Health and Human Services, Department of	2, III; 5, XLV; 45, Subtitle A,
Centers for Medicare & Medicaid Services	42, IV
Child Support Enforcement, Office of	45, III
Children and Families, Administration for	45, II, III, IV, X
Community Services, Office of	45, X
Family Assistance, Office of	45, II
Federal Acquisition Regulation	48, 3
Food and Drug Administration	21, I
Human Development Services, Office of	45, XIII
Indian Health Service	25, V
Inspector General (Health Care), Office of	42, V
Public Health Service	42, I
Refugee Resettlement, Office of	45, IV
Homeland Security, Department of	2, XXX; 6, I; 8, I
Coast Guard	33, I; 46, I; 49, IV
Coast Guard (Great Lakes Pilotage)	46, III
Customs and Border Protection	19, I
Federal Emergency Management Agency	44, I
Human Resources Management and Labor Relations Systems	5, XCVII
Immigration and Customs Enforcement Bureau	19, IV
Transportation Security Administration	49, XII
HOPE for Homeowners Program, Board of Directors of	24, XXIV
Housing and Urban Development, Department of	2, XXIV; 5, LXV; 24, Subtitle B
Community Planning and Development, Office of Assistant Secretary for	24, V, VI
Equal Opportunity, Office of Assistant Secretary for	24, I
Federal Acquisition Regulation	48, 24
Federal Housing Enterprise Oversight, Office of	12, XVII
Government National Mortgage Association	24, III
Housing—Federal Housing Commissioner, Office of Assistant Secretary for	24, II, VIII, X, XX
Housing, Office of, and Multifamily Housing Assistance Restructuring, Office of	24, IV
Inspector General, Office of	24, XII
Public and Indian Housing, Office of Assistant Secretary for	24, IX
Secretary, Office of	24, Subtitle A, VII
Housing—Federal Housing Commissioner, Office of Assistant Secretary for	24, II, VIII, X, XX
Housing, Office of, and Multifamily Housing Assistance Restructuring, Office of	24, IV
Human Development Services, Office of	45, XIII
Immigration and Customs Enforcement Bureau	19, IV
Immigration Review, Executive Office for	8, V
Independent Counsel, Office of	28, VII

Agency	CFR Title, Subtitle or Chapter
Indian Affairs, Bureau of	25, I, V
Indian Affairs, Office of the Assistant Secretary	25, VI
Indian Arts and Crafts Board	25, II
Indian Health Service	25, V
Industry and Security, Bureau of	15, VII
Information Resources Management, Office of	7, XXVII
Information Security Oversight Office, National Archives and Records Administration	32, XX
Inspector General	
Agriculture Department	7, XXVI
Health and Human Services Department	42, V
Housing and Urban Development Department	24, XII, XV
Institute of Peace, United States	22, XVII
Inter-American Foundation	5, LXIII; 22, X
Interior Department	2, XIV
American Indians, Office of the Special Trustee	25, VII
Endangered Species Committee	50, IV
Federal Acquisition Regulation	48, 14
Federal Property Management Regulations System	41, 114
Fish and Wildlife Service, United States	50, I, IV
Geological Survey	30, IV
Indian Affairs, Bureau of	25, I, V
Indian Affairs, Office of the Assistant Secretary	25, VI
Indian Arts and Crafts Board	25, II
Land Management, Bureau of	43, II
National Indian Gaming Commission	25, III
National Park Service	36, I
Natural Resource Revenue, Office of	30, XII
Ocean Energy Management, Bureau of	30, V
Reclamation, Bureau of	43, I
Safety and Enforcement Bureau, Bureau of	30, II
Secretary of the Interior, Office of	2, XIV; 43, Subtitle A
Surface Mining Reclamation and Enforcement, Office of	30, VII
Internal Revenue Service	26, I
International Boundary and Water Commission, United States and Mexico, United States Section	22, XI
International Development, United States Agency for	22, II
Federal Acquisition Regulation	48, 7
International Development Cooperation Agency, United States	22, XII
International Joint Commission, United States and Canada	22, IV
International Organizations Employees Loyalty Board	5, V
International Trade Administration	15, III; 19, III
International Trade Commission, United States	19, II
Interstate Commerce Commission	5, XL
Investment Security, Office of	31, VIII
James Madison Memorial Fellowship Foundation	45, XXIV
Japan–United States Friendship Commission	22, XVI
Joint Board for the Enrollment of Actuaries	20, VIII
Justice Department	2, XXVIII; 5, XXVIII; 28, I, XI; 40, IV
Alcohol, Tobacco, Firearms, and Explosives, Bureau of	27, II
Drug Enforcement Administration	21, II
Federal Acquisition Regulation	48, 28
Federal Claims Collection Standards	31, IX
Federal Prison Industries, Inc.	28, III
Foreign Claims Settlement Commission of the United States	45, V
Immigration Review, Executive Office for	8, V
Offices of Independent Counsel	28, VI
Prisons, Bureau of	28, V
Property Management Regulations	41, 128
Labor Department	2, XXIX; 5, XLII
Employee Benefits Security Administration	29, XXV
Employees' Compensation Appeals Board	20, IV
Employment and Training Administration	20, V
Employment Standards Administration	20, VI

Agency	CFR Title, Subtitle or Chapter
Federal Acquisition Regulation	48, 29
Federal Contract Compliance Programs, Office of	41, 60
Federal Procurement Regulations System	41, 50
Labor-Management Standards, Office of	29, II, IV
Mine Safety and Health Administration	30, I
Occupational Safety and Health Administration	29, XVII
Office of Workers' Compensation Programs	20, VII
Public Contracts	41, 50
Secretary of Labor, Office of	29, Subtitle A
Veterans' Employment and Training Service, Office of the Assistant Secretary for	41, 61; 20, IX
Wage and Hour Division	29, V
Workers' Compensation Programs, Office of	20, I
Labor-Management Standards, Office of	29, II, IV
Land Management, Bureau of	43, II
Legal Services Corporation	45, XVI
Library of Congress	36, VII
Copyright Royalty Board	37, III
U.S. Copyright Office	37, II
Local Television Loan Guarantee Board	7, XX
Management and Budget, Office of	5, III, LXXVII; 14, VI; 48, 99
Marine Mammal Commission	50, V
Maritime Administration	46, II
Merit Systems Protection Board	5, II, LXIV
Micronesian Status Negotiations, Office for	32, XXVII
Military Compensation and Retirement Modernization Commission	5, XCIV
Millennium Challenge Corporation	22, XIII
Mine Safety and Health Administration	30, I
Minority Business Development Agency	15, XIV
Miscellaneous Agencies	1, IV
Monetary Offices	31, I
Morris K. Udall Scholarship and Excellence in National Environmental Policy Foundation	36, XVI
Museum and Library Services, Institute of	2, XXXI
National Aeronautics and Space Administration	
Federal Acquisition Regulation	48, 18
National Agricultural Library	7, XLI
National Agricultural Statistics Service	7, XXXVI
National and Community Service, Corporation for	2, XXII; 45, XII, XXV
National Archives and Records Administration	2, XXVI; 5, LXVI; 36, XII
Information Security Oversight Office	32, XX
National Capital Planning Commission	1, IV
National Commission for Employment Policy	1, IV
National Commission on Libraries and Information Science	45, XVII
National Council on Disability	34, XII
National Counterintelligence Center	32, XVIII
National Credit Union Administration	5, LXXXVI; 12, VII
National Crime Prevention and Privacy Compact Council	28, IX
National Drug Control Policy, Office of	2, XXXVI; 21, III
National Endowment for the Arts	2, XXXII
National Endowment for the Humanities	2, XXXIII
National Foundation on the Arts and the Humanities	45, XI
National Geospatial-Intelligence Agency	32, I
National Highway Traffic Safety Administration	23, II, III; 47, VI; 49, V
National Imagery and Mapping Agency	32, I
National Indian Gaming Commission	25, III
National Institute of Food and Agriculture	7, XXXIV
National Institute of Standards and Technology	15, II
National Intelligence, Office of Director of	5, IV; 32, XVII
National Labor Relations Board	5, LXI; 29, I
National Marine Fisheries Service	50, II, IV
National Mediation Board	29, X
National Oceanic and Atmospheric Administration	15, IX; 50, II, III, IV, VI
National Park Service	36, I

Agency	CFR Title, Subtitle or Chapter
National Railroad Adjustment Board	29, III
National Railroad Passenger Corporation (AMTRAK)	49, VII
National Science Foundation	2, XXV; 5, XLIII; 45, VI
Federal Acquisition Regulation	48, 25
National Security Council	32, XXI
National Security Council and Office of Science and Technology Policy	47, II
National Telecommunications and Information Administration	15, XXIII; 47, III, IV
National Transportation Safety Board	49, VIII
Natural Resources Conservation Service	7, VI
Natural Resource Revenue, Office of	30, XII
Navajo and Hopi Indian Relocation, Office of	25, IV
Navy Department	32, VI
Federal Acquisition Regulation	48, 52
Neighborhood Reinvestment Corporation	24, XXV
Northeast Interstate Low-Level Radioactive Waste Commission	10, XVIII
Nuclear Regulatory Commission	2, XX; 5, XLVIII; 10, I
Federal Acquisition Regulation	48, 20
Occupational Safety and Health Administration	29, XVII
Occupational Safety and Health Review Commission	29, XX
Ocean Energy Management, Bureau of	30, V
Offices of Independent Counsel	28, VI
Office of Workers' Compensation Programs	20, VII
Oklahoma City National Memorial Trust	36, XV
Operations Office	7, XXVIII
Overseas Private Investment Corporation	5, XXXIII; 22, VII
Patent and Trademark Office, United States	37, I
Payment From a Non-Federal Source for Travel Expenses	41, 304
Payment of Expenses Connected With the Death of Certain Employees	41, 303
Peace Corps	2, XXXVII; 22, III
Pennsylvania Avenue Development Corporation	36, IX
Pension Benefit Guaranty Corporation	29, XL
Personnel Management, Office of	5, I, XXXV; 5, IV; 45, VIII
Human Resources Management and Labor Relations Systems, Department of Homeland Security	5, XCVII
Federal Acquisition Regulation	48, 17
Federal Employees Group Life Insurance Federal Acquisition Regulation	48, 21
Federal Employees Health Benefits Acquisition Regulation	48, 16
Pipeline and Hazardous Materials Safety Administration	49, I
Postal Regulatory Commission	5, XLVI; 39, III
Postal Service, United States	5, LX; 39, I
Postsecondary Education, Office of	34, VI
President's Commission on White House Fellowships	1, IV
Presidential Documents	3
Presidio Trust	36, X
Prisons, Bureau of	28, V
Privacy and Civil Liberties Oversight Board	6, X
Procurement and Property Management, Office of	7, XXXII
Productivity, Technology and Innovation, Assistant Secretary	37, IV
Public Contracts, Department of Labor	41, 50
Public and Indian Housing, Office of Assistant Secretary for	24, IX
Public Health Service	42, I
Railroad Retirement Board	20, II
Reclamation, Bureau of	43, I
Refugee Resettlement, Office of	45, IV
Relocation Allowances	41, 302
Research and Innovative Technology Administration	49, XI
Rural Business-Cooperative Service	7, XVIII, XLII, L
Rural Development Administration	7, XLII
Rural Housing Service	7, XVIII, XXXV, L
Rural Telephone Bank	7, XVI

Agency	CFR Title, Subtitle or Chapter
Rural Utilities Service	7, XVII, XVIII, XLII, L
Safety and Environmental Enforcement, Bureau of	30, II
Saint Lawrence Seaway Development Corporation	33, IV
Science and Technology Policy, Office of	32, XXIV
Science and Technology Policy, Office of, and National Security Council	47, II
Secret Service	31, IV
Securities and Exchange Commission	5, XXXIV; 17, II
Selective Service System	32, XVI
Small Business Administration	2, XXVII; 13, I
Smithsonian Institution	36, V
Social Security Administration	2, XXIII; 20, III; 48, 23
Soldiers' and Airmen's Home, United States	5, XI
Special Counsel, Office of	5, VIII
Special Education and Rehabilitative Services, Office of	34, III
State Department	2, VI; 22, I; 28, XI
Federal Acquisition Regulation	48, 6
Surface Mining Reclamation and Enforcement, Office of	30, VII
Surface Transportation Board	49, X
Susquehanna River Basin Commission	18, VIII
Technology Administration	15, XI
Technology Policy, Assistant Secretary for	37, IV
Tennessee Valley Authority	5, LXIX; 18, XIII
Thrift Supervision Office, Department of the Treasury	12, V
Trade Representative, United States, Office of	15, XX
Transportation, Department of	2, XII; 5, L
Commercial Space Transportation	14, III
Contract Appeals, Board of	48, 63
Emergency Management and Assistance	44, IV
Federal Acquisition Regulation	48, 12
Federal Aviation Administration	14, I
Federal Highway Administration	23, I, II
Federal Motor Carrier Safety Administration	49, III
Federal Railroad Administration	49, II
Federal Transit Administration	49, VI
Maritime Administration	46, II
National Highway Traffic Safety Administration	23, II, III; 47, IV; 49, V
Pipeline and Hazardous Materials Safety Administration	49, I
Saint Lawrence Seaway Development Corporation	33, IV
Secretary of Transportation, Office of	14, II; 49, Subtitle A
Surface Transportation Board	49, X
Transportation Statistics Bureau	49, XI
Transportation, Office of	7, XXXIII
Transportation Security Administration	49, XII
Transportation Statistics Bureau	49, XI
Travel Allowances, Temporary Duty (TDY)	41, 301
Treasury Department	2, X;5, XXI; 12, XV; 17, IV; 31, IX
Alcohol and Tobacco Tax and Trade Bureau	27, I
Community Development Financial Institutions Fund	12, XVIII
Comptroller of the Currency	12, I
Customs and Border Protection	19, I
Engraving and Printing, Bureau of	31, VI
Federal Acquisition Regulation	48, 10
Federal Claims Collection Standards	31, IX
Federal Law Enforcement Training Center	31, VII
Financial Crimes Enforcement Network	31, X
Fiscal Service	31, II
Foreign Assets Control, Office of	31, V
Internal Revenue Service	26, I
Investment Security, Office of	31, VIII
Monetary Offices	31, I
Secret Service	31, IV
Secretary of the Treasury, Office of	31, Subtitle A
Thrift Supervision, Office of	12, V
Truman, Harry S. Scholarship Foundation	45, XVIII
United States and Canada, International Joint Commission	22, IV

Agency	CFR Title, Subtitle or Chapter
United States and Mexico, International Boundary and Water Commission, United States Section	22, XI
U.S. Copyright Office	37, II
Utah Reclamation Mitigation and Conservation Commission	43, III
Veterans Affairs Department	2, VIII; 38, I
Federal Acquisition Regulation	48, 8
Veterans' Employment and Training Service, Office of the Assistant Secretary for	41, 61; 20, IX
Vice President of the United States, Office of	32, XXVIII
Wage and Hour Division	29, V
Water Resources Council	18, VI
Workers' Compensation Programs, Office of	20, I
World Agricultural Outlook Board	7, XXXVIII

List of CFR Sections Affected

All changes in this volume of the Code of Federal Regulations (CFR) that were made by documents published in the FEDERAL REGISTER since January 1, 2010 are enumerated in the following list. Entries indicate the nature of the changes effected. Page numbers refer to FEDERAL REGISTER pages. The user should consult the entries for chapters, parts and subparts as well as sections for revisions.

For changes to this volume of the CFR prior to this listing, consult the annual edition of the monthly List of CFR Sections Affected (LSA). The LSA is available at *www.fdsys.gov*. For changes to this volume of the CFR prior to 2001, see the ''List of CFR Sections Affected, 1949–1963, 1964–1972, 1973–1985, and 1986–2000'' published in 11 separate volumes. The ''List of CFR Sections Affected 1986–2000'' is available at *www.fdsys.gov*.

2010

36 CFR

75 FR Page

Chapter XII

1200.7 (a)(9) added 19556
1206.1 Removed; new 1206.1 redesignated from 1206.2 66317
1206.2 Redesignated as 1206.1 66317
1206.3 Revised 66317
1206.4 Revised 66317
1206.8 (b), (d) and (e) revised 66317
1206.10 (b) and (c) revised 66317
1206.12 (a) revised 66317
1206.24 (a) introductory text revised 66317
1206.32 (a) and (b) introductory text revised 66317
1206.34 Introductory text revised 66318
1206.40 (a) revised 66318
1206.41 (a) revised; (b) amended 66318
1206.42 (a) and (c) revised; (b) amended 66318
1206.43 Amended 66318
1206.44 Revised 66318
1206.45 Heading, (a)(1), (b) and (c) revised 66318
1206.50 (a)(1) amended 66318
1206.52 Amended 66318
1206.54 Revised 66318
1206.56 Revised 66318
1206.58 (a), (b) introductory text, (1)(i), (ii) and (2) revised; (b)(1)(iii) and (3) removed 66318
1206.60 Amended 66319
1206.64 (a) revised 66319

36 CFR—Continued

75 FR Page

Chapter XII—Continued

1206.70 Amended 66319
1206.72 (a) revised 66319
1206.74 Amended 66319
1206.76 Revised 66319
1206.80 (a) amended 66319
1206.82 Revised 66319
1206.84 (a) amended; (c) removed 66319
1206.86 Revised 66319
1206.88 Amended 66319
1253.6 (g) removed; (f) and (i) through (m) redesignated as new (g) and (j) through (n); new (f) and (i) added 19557
1253.7 Revised 19557
1253 Revised 71545
1254.4 (b) revised 71547
1254.6 (b) and (c) revised 10415
1254.10 (b) revised 10415
1254.22 (a) revised 10415
1254.44 (a) revised 10415
1254.84 Revised 10415
1280.2 (d) revised 19557
1280.12 (c) revised 19558
1280.46 (b)(1) and (2) amended; (b)(3) redesignated as (c) and revised 3863
1280.62 Revised 71547
1280.92 (a) revised 71547

2011

36 CFR

76 FR Page

Chapter XII

1200.4 (a)(1) amended 1524
1200.7 (a) through (d) redesignated as (d) through (g); new (a), (b), (c), (d)(10), (11) and (12) added; new (d) introductory text, (f) introductory text and (g) revised; new (d)(7), (8) and (e) introductory text amended 1524
1200.8 Heading revised 1525
1254.50 Amended 6555
1254.52 Amended 6555
1258 Revised 62632
1260 (Subchapter D) Revised 81828
1281.2 (b)(1) correctly revised 11337

2012

(No regulations published)

2013

36 CFR

76 FR Page

Chapter XI

1191.1 (a) note 1, (b) note 1 and note 2 redesignated as (a) note 3, (b) note 2 and note 3; new (a) note 1, note 2, (b) note 2 and note 3 added 59493
1191 Appendix A revised 59493
Appendix B revised 59495
Appendix C revised 59509
Appendix D revised 59526
Appendices B and C corrected 67303
Appendix D corrected 67304–67307
Appendix E removed 59553

Chapter XII

1258.14 Removed 59825
1258.18 (a) amended 59825
1280.78 (c) revised 41305
1280.80 (a) revised 41305
1280.87 Revised 41305
1280.88 (a) revised 41305

2014

36 CFR

79 FR Page

Chapter X

1002.6 Added 48993

Chapter XI

1191 Appendix B amended 26138
Appendix B corrected 57804
Appendix C amended 26139
Appendix C corrected 57805
Appendix D amended 26142

Chapter XII

1206 Authority citation revised 76080
1206.3 Amended; interim 76080
1206.8 (c) amended; interim 76080
1206.12 (a) amended; interim 76080
1206.24 (b) amended; interim 76080
1206.45 (b) amended; interim 76080
1206.50 (b)(3) revised; interim 76080
1206.72 Revised; interim 76080
1207 Removed; interim 76080
1210 Removed; interim 76080
1250 Revised 56504
1253.3 Revised 49452
1253.4 Removed; redesignated from 1253.6; revised 49453
1253.5 Removed; redesignated from 1253.7; revised 49453
1253.6 Redesignated as 1253.4 49453
Redesignated from 1253.8 49454
1253.7 Redesignated as 1253.5 49453
Redesignated from 1253.9; (c) amended 49454
1253.8 Redesignated as 1253.6; redesignated from 1253.10; (a) amended 49454
1253.9 Redesignated as 1253.7 49454
1253.10 Redesignated as 1253.8 49454

2015

(No regulations published from January 1, 2015, through July 1, 2015)