AUTHENTICATED
U.S. GOVERNMENT
INFORMATION
GPO

PART 799—IDENTIFICATION OF SPECIFIC CHEMICAL SUBSTANCE AND MIXTURE TESTING REQUIREMENTS

Subpart A—General Provisions

Sec.
799.1 Scope and purpose.
799.2 Applicability.
799.3 Definitions.
799.5 Submission of information.
799.10 Test standards.
799.11 Availability of test guidelines.
799.12 Test results.
799.17 Effects of non-compliance.
799.18 Chemicals subject of test rules or consent orders for which the testing reimbursement period has passed.
799.19 Chemical imports and exports.

Subpart B—Specific Chemical Test Rules

799.1053 Trichlorobenzenes.
799.1560 Diethylene glycol butyl ether and diethylene glycol butyl ether acetate.
799.1575 Diethylenetriamine (DETA).
799.1645 2-Ethylhexanol.
799.1700 Fluoroalkenes.
799.2155 Commercial hexane.
799.2325 Isopropanol.
799.2475 2-Mercaptobenzothiazole.
799.2700 Methyl ethyl ketoxime.
799.3300 Unsubstituted phenylenediamines.
799.4360 Tributyl phosphate.
799.4440 Triethylene glycol monomethyl ether.

Subpart C—Testing Consent Orders

799.5000 Testing consent orders for substances and mixtures with Chemical Abstract Service Registry Numbers.
799.5025 Testing consent orders for mixtures without Chemical Abstracts Service Registry Numbers.

Subpart D—Multichemical Test Rules

799.5055 Hazardous waste constituents subject to testing.
799.5075 Drinking water contaminants subject to testing.
799.5085 Chemical testing requirements for first group of high production volume chemicals (HPV1).
799.5087 Chemical testing requirements for second group of high production volume chemicals (HPV2).
799.5089 Chemical testing requirements for third group of high production volume chemicals (HPV3).
799.5115 Chemical testing requirements for certain chemicals of interest to the Occupational Safety and Health Administration.

Subpart E—Product Properties Test Guidelines

799.6755 TSCA partition coefficient (*n*-octanol/water), shake flask method.
799.6756 TSCA partition coefficient (*n*-octanol/water), generator column method.
799.6784 TSCA water solubility: Column elution method; shake flask method.
799.6786 TSCA water solubility: Generator column method.

Subparts F–G [Reserved]

Subpart H—Health Effects Test Guidelines

799.9110 TSCA acute oral toxicity.
799.9120 TSCA acute dermal toxicity.
799.9130 TSCA acute inhalation toxicity.
799.9135 TSCA acute inhalation toxicity with histopathology.
799.9305 TSCA Repeated dose 28–day oral toxicity study in rodents.
799.9310 TSCA 90-day oral toxicity in rodents.
799.9325 TSCA 90-day dermal toxicity.
799.9346 TSCA 90-day inhalation toxicity.
799.9355 TSCA reproduction/developmental toxicity screening test.
799.9365 TSCA combined repeated dose toxicity study with the reproduction/developmental toxicity screening test.
799.9370 TSCA prenatal developmental toxicity.
799.9380 TSCA reproduction and fertility effects.
799.9410 TSCA chronic toxicity.
799.9420 TSCA carcinogenicity.
799.9430 TSCA combined chronic toxicity/carcinogenicity.
799.9510 TSCA bacterial reverse mutation test.
799.9530 TSCA in vitro mammalian cell gene mutation test.
799.9537 TSCA in vitro mammalian chromosome aberration test.
799.9538 TSCA mammalian bone marrow chromosomal aberration test.
799.9539 TSCA mammalian erythrocyte micronucleus test.
799.9620 TSCA neurotoxicity screening battery.
799.9630 TSCA developmental neurotoxicity.
799.9748 TSCA metabolism and pharmacokinetics.
799.9780 TSCA immunotoxicity.

AUTHORITY: 15 U.S.C. 2603, 2611, 2625.

SOURCE: 49 FR 39817, Oct. 10, 1984, unless otherwise noted.

Subpart A—General Provisions

§ 799.1 Scope and purpose.

(a) This part identifies the chemical substances, mixtures, and categories of

substances and mixtures for which data are to be developed, specifies the persons required to test (manufacturers, including importers, and/or processors), specifies the test substance(s) in each case, prescribes the tests that are required including the test standards, and provides deadlines for the submission of reports and data to EPA.

(b) This part requires manufacturers and/or processors of chemical substances or mixtures (''chemicals'') identified in subpart B to submit letters of intent to test, exemption applications, and study plans in accordance with EPA test rule development and exemption procedures contained in part 790 of this chapter and any modifications to such procedures contained in this part.

(c) This part requires manufacturers and/or processors of chemicals identified in subpart B to conduct tests and submit data in accordance with the test standards contained in this part in order to develop data on the health and environmental effects and other characteristics of these chemicals. These data will be used to assess the risk of injury to human health or the environment presented by these chemicals.

(d) This part contains certain TSCA test guidelines which are cross-referenced in the test rules contained in this part.

[49 FR 39817, Oct. 10, 1984, as amended at 62 FR 43824, Aug. 15, 1997]

§ 799.2 Applicability.

This part is applicable to each person who manufactures or intends to manufacture (including import) and/or to each person who processes or intends to process a chemical substance or mixture identified in subpart B for testing during the period commencing with the effective date of the specific chemical test rule until the end of the reimbursement period. Each set of testing requirements in subpart B specifies whether those requirements apply to manufacturers only, to processors only, or to both manufacturers and processors.

§ 799.3 Definitions.

The definitions in section 3 of the Toxic Substances Control Act (TSCA) and the definitions of § 790.3 of this chapter apply to this part.

§ 799.5 Submission of information.

(a) Information (e.g., letters, study plans, or reports) submitted to EPA must be submitted using the method specified in paragraph (b) of this section. All information submitted under this part must bear the Code of Federal Regulations (CFR) section number of the subject chemical test rule (e.g., § 799.1053 for trichlorobenzenes).

(b) You must use CISS to complete and submit all data, reports, and other information required under this part. Submissions must be submitted to EPA via the Central Data Exchange (CDX).

(c) To access CISS go to *https://cdx.epa.gov/ssl/CSPP/PrimaryAuthorizedOfficial/Home.aspx* and follow the appropriate links and for further instructions to go *http://www.epa.gov/oppt/chemtest/ereporting/index.html*.

[78 FR 72830, Dec. 4, 2013]

§ 799.10 Test standards.

Testing required under subpart B must be performed using a study plan prepared according to the requirements of parts 790 and 792 of this chapter unless modified in specific chemical test rules in subpart B. All raw data, documentation, records, protocols, specimens and reports generated as a result of a study under subpart B must be developed, reported, and retained in accordance with TSCA Good Laboratory Practice Standards (GLP's) in part 792 of this chapter. These items must be made available during an inspection or submitted to EPA upon request by EPA or its authorized representative. Laboratories conducting testing for submission to the Agency in response to a test rule promulgated under section 4 of TSCA must adhere to the TSCA GLP's. Sponsors must notify the laboratory that the study is being conducted pursuant to TSCA section 4. Sponsors are also responsible for ensuring that laboratories conducting the test abide by the TSCA GLP standards. In accordance with § 792.12 of this chapter, a certification concerning adherence to the TSCA GLP's must be submitted to EPA.

§ 799.11 Availability of test guidelines.

(a) The TSCA and FIFRA guidelines for the various study plans are available from the National Technical Information Service (NTIS). Address and telephone number: National Technical Information Service, 5285 Port Royal Road, Springfield, VA 22161 (703–487–4650).

(b) The OECD guidelines for the various study plans are available from the following address: OECD Publication and Information Center, 1750 Pennsylvania Ave., NW., Washington, DC 20006 (202–724–1857).

§ 799.12 Test results.

Except as set forth in specific chemical test rules in subpart B of this part, a positive or negative test result in any of the tests required under subpart B is defined in the TSCA test guidelines published by NTIS.

§ 799.17 Effects of non-compliance.

Any person who fails or refuses to comply with any aspect of this part or part 790 is in violation of section 15 of TSCA. EPA will treat violations of Good Laboratory Practice Standards as indicated in § 792.17 of this chapter.

§ 799.18 Chemicals subject of test rules or consent orders for which the testing reimbursement period has passed.

The following table lists substances and mixtures that have been the subjects of section 4 testing actions and for which the testing reimbursement period has terminated (sunset). The FEDERAL REGISTER citation in the table is for the final rule/consent order that includes the particular substance for which the sunset date listed in the table below applies. Section 12(b) export notification is no longer required for these substances and mixtures. Substances that are the subjects of two or more section 4 testing actions may have section 4 reimbursement or section 12(b) export notification requirements that have not sunset; see subparts B, C, and D of this part to determine if certain other section 4 testing requirements apply. Additionally, section 12(b) export notification may also be triggered by proposed or final action under TSCA section 5, 6, or 7 (in addition to final actions under section 4); see 40 CFR part 707, subpart D for further information regarding the TSCA section 12(b) export notification requirements.

CAS No.	Chemical Name	FR cite	Sunset dates
	C-9 Aromatic Hydrocarbon Fraction [1]	50 FR 20662, 5/17/85	Aug 13, 1994
62–53–3	Aniline	53 FR 31804, 8/19/88	July 27, 1994
71–55–6	1,1,1-Trichloroethane	49 FR 39810, 10/10/84	June 29, 1992
75–56–9	Propylene oxide	50 FR 48762, 11/27/85	Dec,21, 1992
78–87–5	1,2-Dichloropropane	52 FR 37138, 10/5/87	April 17, 1995
79–94–7	Tetrabromobisphenol-A	52 FR 25219, 7/6/87	Aug 24, 1994
80–05–7	Bisphenol A	51 FR 33047, 9/18/86	April 6, 1993
84–65–1	Anthraquinone	52 FR 21018, 6/4/87	Aug 21, 1994
87–61–6	1,2,3-trichlorobenzene	51 FR 11728,4/7/86	Nov 13, 1993
88–74–4	2-nitroaniline	53 FR 31804, 8/19/88	Sept 19, 1994
92–52–4	1,1-Biphenyl	50 FR 37182, 9/12/85	March 15, 1994
95–48–7	Ortho-cresols AKA 2-methylphenol	51 FR 15771, 4/28/86	Dec. 6, 1994
95–50–1	1,2-dichlorobenzene	51 FR 24657, 7/8/86	April 27, 1994
95–51–2	2-chloroaniline	53 FR 31804, 8/19/88	Sept 6, 1994
95–76–1	3,4-dichloroaniline	53 FR 31804, 8/19/88	Oct 2, 1994
95–94–3	1,2,4,5-tetrachlorobenzene	51 FR 24657,7/8/86	April 27, 1994
97–02–9	2,4-dinitroaniline	53 FR 31804, 8/19/88	Oct 19, 1993
98–82–8	Cumene	53 FR 28195, 7/27/88	March 11, 1995
99–30–9	2,6-dichloro-4-nitroaniline	53 FR 31804, 8/19/88	Aug 6, 1994
100–01–6 ..	4-nitroaniline	53 FR 31804, 8/19/88	Sept 19, 1994
106–44–5 ..	Para-cresols AKA 4-methylphenol	51 FR 15771, 4/28/86	Dec. 6, 1994
106–46–7 ..	1,4-dichlorobenzene	51 FR 24657, 7/8/86	Jan 22, 1994
106–47–8 ..	4-chloroaniline	53 FR 31804, 8/19/88	Oct 19, 1993
108–39–4 ..	Meta-cresols AKA 3-methylphenol	51 FR 15771, 4/28/86	Dec. 6, 1994
108–90–7 ..	Monochlorobenzene	51 FR 24657, 7/8/86	Nov 13, 1991
112–90–3 ..	Oleylamine	52 FR 31962, 8/24/87	Nov 28, 1994
116–14–3 ..	Tetrafluoroethene	52 FR 21516, 6/8/87	May 19, 1993
116–15–4 ..	Hexafluoropropene	52 FR 21516, 6/8/87	Jan 22, 1994
123–31–9 ..	Hydroquinone	50 FR 53145, 12/30/85	Dec. 11, 1994
149–57–5 ..	2-Ethylhexanoic Acid	51 FR 40318, 11/6/86	June 19, 1993
328–84–7 ..	3,4-Dichlorobenzotrifluoride	52 FR 23547, 6/23/87	Dec. 5, 1993

CAS No.	Chemical Name	FR cite	Sunset dates
25550–98–5.	Diisodecyl Phenyl Phosphite	54 FR 8112, 2/24/89	May 21, 1995

[1] Only substances obtained from the reforming of crude petroleum.

[60 FR 31923, June 19, 1995]

§ 799.19 Chemical imports and exports.

Persons who export or who intend to export chemical substances or mixtures listed in subpart B, subpart C, or subpart D of this part are subject to the requirements of 40 CFR part 707.

[71 FR 66245, Nov. 14, 2006]

Subpart B—Specific Chemical Test Rules

§ 799.1053 Trichlorobenzenes.

(a) *Identification of testing substance.* (1) 1,2,3- and 1,2,4-trichlorobenzenes, CAS Numbers 87–61–6 and 120–82–1 respectively, shall be tested in accordance with this section.

(2) The substances identified in paragraph (a)(1) of this section shall be 99 percent pure and shall be used as the test substances in each of the tests specified.

(3) For health effects testing required under paragraph (e) of this section, the test substance shall not contain more than 0.05 percent benzene and 0.05 percent hexachlorobenzene.

(b) *Persons required to submit study plans, conduct tests, and submit data.* (1) All persons who manufacture or process substances identified in paragraph (a)(1) of this section, other than an impurity, from May 21, 1986, to the end of the reimbursement period, shall submit a letter of intent to test or exemption applications and shall conduct tests, in accordance with part 792 of this chapter, and submit data as specified in this section, subpart A of this part and part 790 of this chapter for two-phase rulemaking.

(2) Persons subject to this section are not subject to the requirements of § 790.50(a) (2), (5), (6) and (b) and § 790.87(a)(1)(ii) of this chapter.

(3) Persons who notify EPA of their intent to conduct tests in compliance with the requirements of this section must submit plans for those tests no later than 30 days before the initiation of each of those tests.

(4) In addition to the requirements of § 790.87(a)(2) and (3) of this chapter, EPA will conditionally approve exemption applications for this rule if EPA has received a letter of intent to conduct the testing from which exemption is sought and EPA has adopted test standards and schedules in a final Phase II test rule.

(5) For health effects testing required under paragraph (e) of this section, all persons who manufacture (import) or process 1,2,4-trichlorobenzene, other than as an impurity, after the effective date of this rule (August 21, 1986) to the end of the reimbursement period shall submit letters of intent to conduct testing or exemption applications, submit study plans, conduct tests, and submit data as specified in this section, subpart A of this part, and parts 790 and 792 of this chapter for single-phase rulemaking.

(c) [Reserved]

(d) *Environmental effects testing.* 1,2,3- and 1,2,4-trichlorobenzenes shall be tested in accordance with this section.

(1) *Marine invertebrate acute toxicity testing*—(i) *Required testing.* Testing using measured concentrations, flow through or static renewal systems, and systems that control for evaporation of the test substance, shall be conducted for 1,2,3- and 1,2,4-trichlorobenzenes. Testing shall be conducted with mysid shrimp (*Mysidopis bahia*) to develop data on the acute toxicity of the above chlorobenzene isomers to marine invertebrates.

(ii) *Test standards.* The marine invertebrate (mysid shrimp, *Mysidopis bahia*) acute toxicity testing for 1,2,3- and 1,2,4-trichlorobenzenes shall be conducted in accordance with § 797.1930 of this chapter.

(iii) *Reporting requirements.* (A) The acute toxicity tests on marine invertebrates shall be completed and the final report submitted to EPA within 1 year

of the effective date of the final Phase II test rule.

(B) An interim progress report shall be submitted to the Agency within 6 months after the effective date of the final Phase II rule.

(2) *Marine fish acute toxicity testing*—(i) *Required testing*. Testing using measured concentrations, flow through systems, and systems that control for evaporation of the test substance shall be conducted for 1,2,3-trichlorobenzene. Testing shall be conducted with Silversides (*Menidia menidia*) to develop data on the acute toxicity of 1,2,3-trichlorobenzene to saltwater fish.

(ii) *Test standard*. The marine fish (silverside minnow, *Menida menidia*) acute toxicity test shall be conducted for 1,2,3-trichlorobenzene in accordance with § 797.1400 of this chapter.

(iii) *Reporting requirements*. (A) The marine fish (silversides minnow, *Menidia menidia*) acute toxicity test shall be completed and the final results submitted within 1 year of the effective date of the Phase II final test rule.

(B) An interim progress report shall be submitted to EPA 6 months after the effective date of the final Phase II rule.

(3) *Freshwater fish acute toxicity testing*—(i) *Required testing*. Testing using measured concentrations, flow through systems, and systems that control evaporation of the test substance shall be conducted for 1,2,3-trichlorobenzene. A 96-hour LC50 test shall be conducted with the fathead minnow (*Pimephales promelas*) to develop data on the acute toxicity of 1,2,3-trichlorobenzene to freshwater fish.

(ii) *Test standard*. The freshwater fish (fathead minnow, *Pimephales promelas*) acute toxicity test shall be conducted for 1,2,3-trichlorobenzene in accordance with § 797.1400 of this chapter.

(iii) *Reporting requirements*. (A) The freshwater fish acute toxicity study shall be completed and the final report submitted to EPA within 1 year of the effective date of the final Phase II test rule.

(B) An interim progress report shall be submitted to EPA 6 months after the effective date of the final Phase II rule.

(4) *Freshwater invertebrate acute toxicity testing*—(i) *Required testing*. Testing using measured concentrations, flow through or static renewal systems, and systems that control for evaporation of the test substance shall be conducted for 1,2,3-trichlorobenzene. A 96-hour EC50 shall be conducted for one species of *Grammarus* to develop data on the acute toxicity of 1,2,3-trichlorobenzene to aquatic freshwater invertebrates.

(ii) *Test standard*. The freshwater invertebrate (Gammarus sp.) acute toxicity test shall be conducted for 1,2,3-trichlorobenzene in accordance with § 795.120 of this chapter.

(iii) *Reporting requirements*. (A) The freshwater invertebrate acute toxicity test shall be completed and the final report submitted to EPA within 411 days of the effective date of the final Phase II rule.

(B) An interim progress report shall be submitted to EPA 6 months after the effective date of the final Phase II rule.

(5) *Mysid shrimp chronic toxicity testing*—(i) *Required testing*. Testing using measured concentrations, flow through or static renewal systems, and systems that control for evaporation of the test substance shall be conducted for 1,2,4-trichlorobenzene. Testing shall be conducted with mysid shrimp (*Mysidopsis bahia*) to develop data on the chronic toxicity of 1,2,3-trichlorobenzene, should the acute LC50 of this chemical to mysid shrimp be determined to be less than 1 ppm.

(ii) *Test standards*. The mysid shrimp (*Mysidopis bahia*) chronic toxicity test shall be conducted for 1,2,4-trichlorobenzene in accordance with § 797.1950 of this chapter. Testing shall also be conducted according to § 797.1950 for 1,2,3-trichlorobenzene should the results of testing required by (d)(1)(ii) of this section yield an acute LC50 for this chemical substance of less than 1 ppm.

(iii) *Reporting requirements*. (A) The mysid shrimp chronic toxicity test for 1,2,4-trichlorobenzene shall be completed and the final report submitted to EPA within 1 year of the effective date of the final Phase II rule. The mysid shrimp chronic toxicity test for 1,2,3-trichlorobenzene, (required if the LC50 is less than 1 ppm), shall be completed and final report submitted to

EPA within 15 months of the effective date of the final Phase II rule.

(B) Progress reports shall be submitted to EPA at 6-month intervals, beginning 6 months after of the effective date of the final Phase II rule and until the final report is submitted to EPA.

(e) *Health effects testing*—(1) *Oncogenicity*—(i) *Required testing*. (A) A test for oncogenic effects shall be conducted with 1,2,4-TCB in accordance with § 798.3300 of this chapter.

(B) The route of administration for the oncogenicity testing for 1,2,4-TCB shall be via the animal feed.

(C) Two rodent species shall be used and one shall be the Fischer-344 rat.

(ii) *Reporting requirements*. (A) The oncogenicity test shall be completed and the final results submitted to EPA by June 30, 1994.

(B) Progress reports shall be submitted to the Agency every 6 months after the effective date of the final rule.

(2) [Reserved]

(f) [Reserved]

(g) *Effective date*. (1) The effective date of the final phase II rule is August 14, 1987, except for paragraphs (d)(4)(iii)(A) and (e)(1)(ii)(A) of this section. The effective date for paragraph (d)(4)(iii)(A) of this section is March 1, 1990. The effective date for paragraph (e)(1)(ii)(A) of this section is June 12, 1992.

(2) The guidelines and other test methods cited in this rule are referenced as they exist on the effective date of the final rule.

[51 FR 11737, Apr. 7, 1986; 51 FR 18444, May 20, 1986, as amended at 51 FR 24667, July 8, 1986; 52 FR 24465, July 1, 1987; 55 FR 7327, Mar. 1, 1990; 57 FR 24960, June 12, 1992; 57 FR 27845, June 22, 1992; 58 FR 34205, June 23, 1993]

§ 799.1560 Diethylene glycol butyl ether and diethylene glycol butyl ether acetate.

(a) *Identification of test substances*. (1) Diethylene glycol butyl ether (DGBE), CAS Number 112–34–5, and diethylene glycol butyl ether acetate (DGBA), CAS Number 124–17–4, shall be tested in accordance with this section.

(2) DGBE of at least 95 percent purity and DGBA of at least 95 percent purity shall be used as the test substances.

(b) *Persons required to submit study plans, conduct tests, and submit data*. All persons who manufacture (including import) or process or intend to manufacture or process DGBE and/or DGBA, other than as an impurity, after April 11, 1988, to the end of the reimbursement period shall submit letters of intent to conduct testing, submit study plans and conduct tests, and submit data, or submit exemption applications as specified in this section, subpart A of this part, and parts 790 and 792 of this chapter for single-phase rulemaking. Persons who manufacture or process DGBE are subject to the requirements to test DGBE in this section. Only persons who manufacture or process DGBA are subject to the requirements to test DGBA in this section.

(c) *Health effects testing*—(1) *Subchronic toxicity*—(i) *Required testing*. (A) A 90-day subchronic toxicity test of DGBE shall be conducted in rats by dermal application in accordance with § 798.2250 of this chapter except for the provisions in paragraphs (e)(9)(iv), (10)(i)(A) and (ii)(B), (11) (ii) and (iii), and (12)(i) of § 798.2250.

(B) For the purpose of this section, the following provisions also apply:

(*1*) A satellite group to evaluate fertility shall be established. Control males shall be cohabited with control females, and males and females administered the high dose shall be cohabited. Endpoints to be evaluated shall include percent mated; percent pregnant; length of gestation; litter size; viability at birth, on Day 4, and weaning, on Day 21; sex of the offspring; and litter weights at birth and Days 4, 7, 14, and 21. Litters shall be standardized on day 4 in accordance with the reproductive and fertility effects guideline, § 798.4700(c)(6)(iv) of this chapter. Gross examinations shall be made at least once each day and physical or behavioral anomalies in the dam or offspring shall be recorded. At weaning, dams shall be sacrificed and examined for resorption sites indicative of post-implantation loss. An additional 20 males and 40 females will have to be added to the subchronic study for this test. If the animals in the high dose group exhibit marked toxicity (e.g. greater than 20 percent

weight loss), then the fertility tests shall be conducted in the next highest dose group.

(*2*) Cage-side observations shall include, but not be limited to, changes in skin and fur; eyes and mucous membranes; respiratory, circulatory autonomic, and central nervous systems; somatomotor activity; and behavior pattern. In addition a daily examination for hematuria shall be done.

(*3*) Certain hematology determinations shall be carried out at least three times during the test period: Just prior to initiation of dosing (baseline data), after approximately 30 days on test, and just prior to terminal sacrifice at the end of the test period. Hematology determinations which are appropriate to all studies: Hematocrit, hemoglobin concentration, erythrocyte count, total and differential leucocyte count, mean corpuscular volume, and a platelet count.

(*4*) Urinalyses shall be done at least three times during the test period: Just prior to initiation of dosing (baseline data), after approximately 30 days into the test, and just prior to terminal sacrifice at the end of the test period. The animals shall be kept in metabolism cages, and the urine shall be examined microscopically for the presence of erythrocytes and renal tubular cells, in addition to measurement of urine volume, specific gravity, glucose, protein/albumin, and blood.

(*5*) The liver, kidney, adrenals, brain, gonads, prostate gland, epididymides, seminal vesicles, and pituitary gland shall be weighed wet, as soon as possible after dissection, to avoid drying.

(*6*) The following organs and tissues, or representative samples thereof, shall be preserved in a suitable medium for possible future histopathological examination: All gross lesions; lungs—which should be removed intact, weighed, and treated with a suitable fixative to ensure that lung structure is maintained (perfusion with the fixative is considered to be an effective procedure); nasopharyngeal tissues; brain—including sections of medulla/pons, cerebellar cortex, and cerebral cortex; pituitary; thyroid/parathyroid; thymus; trachea; heart; sternum with bone marrow; salivary glands; liver; spleen; kidneys; adrenals; pancreas; gonads; uterus; oviducts; vagina; vas deferens; accessory genital organs (epididymis, prostate, and, if present, seminal vesicles); aorta; (skin); gall bladder (if present); esophagus; stomach; duodenum; jejunum; ileum; cecum; colon; rectum; urinary bladder; representative lymph node; (mammary gland); (thigh musculature); peripheral nerve; (eyes); (femur—including articular surface); (spinal cord at three levels—cervical, midthoracic, and lumbar); and (zymbal and exorbital lachrymal glands).

(*7*) (*i*) Full histopathology on normal and treated skin and on organs and tissues listed in paragraph (c)(1)(i)(B)(*6*) of this section, as well as the accessory genital organs (epididymides, prostate, seminal vesicles) and the vagina, of all animals in the control and high dose groups.

(*ii*) The integrity of the various cell stages of spermatogenesis shall be determined, with particular attention directed toward achieving optimal quality in the fixation and embedding; preparations of testicular and associated reproductive organ samples for histology should follow the recommendations of Lamb and Chapin (1985) under paragraph (d)(1) of this section, or an equivalent procedure. Histological analyses shall include evaluations of the spermatogenic cycle, i.e., the presence and integrity of the 14 cell stages. These evaluations should follow the guidance provided by Clermont and Perey (1957) under paragraph (d)(2) of this section. Information shall also be provided regarding the nature and level of lesions observed in control animals for comparative purposes.

(*iii*) Data on female cyclicity shall be obtained by performing vaginal cytology over the last 2 weeks of dosing; the cell staging technique of Sadleir (1978) and the vaginal smear method in Hafez (1970) under paragraphs (d) (3) and (7) of this section or equivalent methods should be used. Data should be provided on whether the animal is cycling and the cycle length.

(*iv*) The ovary shall be serially sectioned with a sufficient number of sections examined to adequately detail oocyte and follicular morphology. The methods of Mattison and Thorgiersson (1979) and Pederson and Peters (1968) under paragraphs (d) (4) and (5) of this

section may provide guidance. The strategy for sectioning and evaluation is left to the discretion of the investigator, but shall be described in detail in the study plan and final report. The nature and background level of lesions in control tissue shall also be noted.

(ii) *Reporting requirements.* (A) The subchronic test shall be completed and the final report submitted to EPA within 15 months of the effective date of the final test rule.

(B) Progress reports shall be submitted to EPA every 6 months, beginning 6 months from the effective date of the final rule until submission of the final report to EPA.

(2) *Neurotoxicity/behavioral effects*—(i) *Required testing*—(A) (*1*) *Functional observational battery.* A functional observational battery shall be performed in the rat by dermal application of DGBE for a period of 90 days according to § 798.6050 of this chapter except for the provisions in paragraphs (b)(1), (d)(4)(ii), (5), and (8)(ii)(E) of § 798.6050.

(*2*) For the purpose of this section, the following provisions also apply:

(*i*) *Definition.* Neurotoxicity is any adverse acute and/or lasting effect on the structure or function of the central and/or peripheral nervous system related to exposure to a chemical substance.

(*ii*) *Lower doses.* The data from the lower doses shall show either graded dose-dependent effects in at least two of all the doses tested including the highest dose, or no neurotoxic (behavioral) effects at any dose tested.

(*iii*) *Duration and frequency of exposure.* Animals shall be exposed for 6 hours/day, 5 days/week for a 90-day period.

(*iv*) *Sensory function.* A simple assessment of sensory function (vision, audition, pain perception) shall be made. Marshall et al. (1971) in § 798.6050(f)(8) of this chapter have described a neurologic exam for this purpose; these procedures are also discussed by Deuel (1977), under § 798.6050(f)(4) of this chapter. Irwin (1968) under § 798.6050(f)(7) of this chapter described a number of reflex tests intended to detect gross sensory deficits. Many procedures have been developed for assessing pain perception (e.g., Ankier (1974) under § 798.6050(f)(1); D'Amour and Smith (1941) under § 798.6050(f)(3); and Evans (1971) under § 798.6050(f)(6) of this chapter.

(B)(*1*) *Motor activity.* A motor activity test shall be conducted in the rat by dermal application of DGBE for a period of 90 days according to § 798.6200 of this chapter except for the provisions in paragraphs (c), (d)(3)(ii), (4)(ii), (5), (8)(i), and (iii) of § 798.6200.

(*2*) For the purpose of this section, the following provisions also apply:

(*i*) *Principle of the test method.* The test substance is administered to several groups of experimental animals, one dose being used per group. Measurements of motor activity are made. Where possible, the exposure levels at which significant changes in motor activity are produced are compared to those levels which produce toxic effects not originating in the central and/or peripheral nervous system.

(*ii*) *Positive control data.* Positive control data are required to document the sensitivity of the activity measuring device and testing procedure. These data should demonstrate the ability to detect increases or decreases in activity and to generate a dose-effect curve or its equivalent using three values of the dose or equivalent independent variable. A single administration of the dose (or equivalent) is sufficient. It is recommended that chemical exposure be used to collect positive control data. Positive control data shall be collected at the time of the test study unless the laboratory can demonstrate the adequacy of historical data for this purpose.

(*iii*) *Lower doses.* The data from the lower doses shall show either graded dose-dependent effects in at least two of all the doses tested including the highest dose, or no neurotoxic (behavioral) effects at any dose tested.

(*iv*) *Duration and frequency of exposure.* Animals shall be exposed for 6 hours/day, 5 days/week for a 90-day period.

(*v*) *General.* Motor activity shall be monitored by an automated activity recording apparatus. The device used shall be capable of detecting both increases and decreases in activity, i.e. baseline activity as measured by the

device shall not be so low as to preclude decreases nor so high as to preclude increases. Each device shall be tested by a standard procedure to ensure, to the extent possible, reliability of operation across devices and across days for any one device. In addition, treatment groups shall be balanced across devices. Each animal shall be tested individually. The test session shall be long enough for motor activity to approach asymptotic levels by the last 20 percent of the session for most treatments and for the session control animals. All sessions should be of the same duration. Treatment groups shall be counter-balanced across test times. Effort should be made to ensure that variations in the test conditions are minimal and are not systematically related to treatment. Among the variables which can affect motor activity are sound level, size and shape of the test cage, temperature, relative humidity, lighting conditions, odors, use of home cage or novel test cage, and environmental distractions. Tests shall be executed by an appropriately trained individual.

(*vi*) *Subchronic*. All animals shall be tested prior to initiation of exposure and at 30 ±4, 60 ±4, and 90 ±4 days during the exposure period. Testing shall occur prior to the daily exposure. Animals shall be weighed on each test day and at least once weekly during the exposure period.

(C)(*1*) *Neuropathology*. A neuropathology test shall be conducted in the rat by dermal application of DGBE for a period of 90 days according to § 798.6400 of this chapter except for the provisions in paragraphs (d)(4)(ii), (5), (8)(iv)(C), and (E)(*2*) of § 798.6400.

(*2*) For the purpose of this section, the following provisions also apply:

(*i*) *Lower doses*. The data from the lower doses shall show either graded dose-dependent effects in at least two of all the doses tested including the highest dose, or no neurotoxic (behavioral) effects at any dose tested.

(*ii*) *Duration and frequency of exposure*. Animals shall be exposed for 6 hours/day, 5 days/week for a 90-day period.

(*iii*) *Clearing and embedding*. After dehydration, tissue specimens shall be cleared with xylene and embedded in paraffin or paraplast except for the sural nerve which should be embedded in plastic. Multiple tissue specimens (e.g. brain, cord, ganglia) may be embedded together in one single block for sectioning. All tissue blocks shall be labeled to provide unequivocal identification. A method for plastic embedding is described by Spencer et al. in paragraph (d)(6) of this section.

(*iv*) *Special stains*. Based on the results of the general staining, selected sites and cellular components shall be further evaluated by the use of specific techniques. If hematoxylin and eosin screening does not provide such information, a battery of stains shall be used to assess the following components in all appropriate required samples: Neuronal body (e.g., Einarson's gallocyanin), axon (e.g., Bodian), myelin sheath (e.g., Kluver's Luxol Fast Blue), and neurofibrils (e.g., Bielchosky). In addition, peripheral nerve fiber teasing may be used. Detailed staining methodology is available in standard histotechnological manuals such as Armed Forces Institute of Pathology (AFIP) (1968) under § 798.6400(f)(1), Ralis et al. (1973) under § 798.6400(f)(5), and Chang (1979) under § 798.6400(f)(2) of this chapter. The nerve fiber teasing technique is discussed in Spencer and Schaumberg (1980) under § 798.6400(f)(6) of this chapter. A section of normal tissue shall be included in each staining to assure that adequate staining has occurred. Any changes shall be noted and representative photographs shall be taken. If a lesion(s) is observed, the special techniques shall be repeated in the next lower treatment group until no further lesion is detectable.

(ii) *Reporting requirements*. (A) The neurotoxicity/behavioral tests required under paragraph (c)(2) of this section shall be completed and the final reports submitted to EPA within 17 months of the effective date of the final rule.

(B) Interim progress reports shall be submitted to EPA at 6-month intervals, beginning 6 months from the effective date of the final rule until submission of the applicable final report to EPA.

(3) *Developmental neurotoxicity*—(i) *Required testing*. A developmental neurotoxicity test of DGBE shall be

conducted after a public program review of the Tier I data from the functional observational battery, motor activity, and neuropathology tests in paragraph (c)(2) of this section, and the reproductive tests in paragraph (c)(1) of this section, and if EPA issues a FEDERAL REGISTER notice or sends a certified letter to the test sponsor specifying that the testing shall be initiated. The test shall be performed in rats in accordance with § 795.250 of this chapter.

(ii) *Reporting requirements.* (A) The developmental neurotoxicity test shall be completed and the final report submitted to EPA within 15 months of EPA's notification of the test sponsor by certified letter or FEDERAL REGISTER notice under paragraph (c)(3)(i) of this section that the testing shall be initiated.

(B) Progress reports shall be submitted to EPA every 6 months, beginning 6 months after the date of notification that the testing shall be initiated, until submission of the final report to EPA.

(4) *Pharmacokinetics*—(i) *Required testing.* (A) Pharmacokinetics testing of DGBE and DGBA will be conducted in rats by the dermal route of administration in accordance with § 795.225 of this chapter, except for the provisions in paragraphs (b) (1)(ii) and (3)(i) of § 795.225.

(B) For the purpose of this section, the following provisions also apply:

(*1*) *Animals.* Adult male and female Sprague Dawley rats shall be used. The rats shall be 7 to 8 weeks old and weigh 180 to 220 grams. Prior to testing, the animals shall be selected at random for each group. Animals showing signs of ill health shall not be used.

(*2*) *Observation of animals—Urinary and fecal excretion.* The quantities of ^{14}C excreted in urine and feces by rats dosed as specified in paragraph (b)(2)(iv) of § 795.225 shall be determined at 8, 24, 48, 72, and 96 hours after dosing, and if necessary, daily thereafter until at least 90 percent of the dose has been excreted or until 7 days after dosing (whichever occurs first). Four animals per sex per dose group shall be used for this purpose.

(ii) *Reporting requirements.* (A) The pharmacokinetics tests shall be completed and the final reports submitted to EPA within 8 months of the effective date of the final amendment.

(B) A progress report shall be submitted to EPA 6 months from the effective date of the final amendment.

(d) *References.* For additional background information the following references should be consulted:

(1) Lamb, J.C. and Chapin, R.E. ''Experimental models of male reproductive toxicology.'' In: ''Endocrine Toxicology.'' Thomas, J.A., Korach, K.S., and McLachlan, J.A., eds. New York, NY: Raven Press. pp. 85–115. (1985).

(2) Clermont, Y. and Perey, B. ''Quantitative study of the cell population of the seminiferous tubules in immature rats.'' *American Journal of Anatomy*. 100:241–267. (1957).

(3) Sadleir, R.M.F.S. ''Cycles and seasons.'' In: ''Reproduction in Mammals: I. Germ Cells and Fertilization.'' Austin, C.R. and Short, R.V., eds. New York, NY: Cambridge Press. Chapter 4. (1978).

(4) Mattison, D.R. and Thorgiersson, S.S. ''Ovarian aryl hydrocarbon hydroxylase activity and primordial oocyte toxicity of polycyclic aromatic hydrocarbons in mice.'' *Cancer Research*. 39:3471–3475. (1979).

(5) Pederson, T. and Peters, H. ''Proposal for classification of oocytes and follicles in the mouse ovary. *Journal of Reproduction and Fertility*. 17:555–557. (1968).

(6) Spencer, P.S., Bischoff, M.C., and Schaumburg, H.H. ''Neuropathological methods for the detection of neurotoxic disease.'' In: ''Experimental and Clinical Neurotoxicology.'' Spencer, P.S. and Schaumburg, H.H., eds. Baltimore, MD: Williams & Wilkins, pp. 743–757. (1980).

(7) Hafez, E.S., ed., ''Reproduction and Breeding Techniques for Laboratory Animals.'' Chapter 10. Philadelphia: Lea & Febiger (1970).

(e) *Effective date.* (1) The effective date of the final rule is April 11, 1988, except for paragraph (c)(2)(ii)(A) of this section. The effective date for paragraph (c)(2)(ii)(A) of this section is March 1, 1990. The effective date for paragraphs (c)(4)(ii)(A) and (c)(4)(ii)(B) of this section is November 27, 1989.

(2) The guidelines and other test methods cited in this rule are referenced as they exist on the effective date of the final rule.

[53 FR 5950, Feb. 26, 1988, as amended at 54 FR 27357, June 29, 1989; 54 FR 41835, Oct. 12, 1989; 55 FR 7326, Mar. 1, 1990; 58 FR 34205, June 23, 1993]

§ 799.1575 Diethylenetriamine (DETA).

(a) *Identification of chemical test substance.* (1) Diethylenetriamine (CAS No. 111–40–0, also known as DETA) shall be tested in accordance with this part.

(2) Diethylenetriamine of at least 99 percent purity shall be used as the test substances in all tests.

(b) *Persons required to submit study plans, conduct tests and submit data.* All persons who manufacture or process diethylenetriamine from July 8, 1985, to the end of the reimbursement period shall submit letters of intent to test, exemption applications, and study plans and shall conduct tests and submit data as specified in this section, subpart A of this part and part 790 of this chapter (Test Rule Development and Exemption Procedures).

(c) *Health effects testing*—(1) *Mutagenic effects—Gene mutation*—(i) *Required testing.* (A) A sex-linked recessive lethal test in *Drosophila melanogaster* shall be conducted with DETA.

(B) A mouse specific locus assay shall be conducted with DETA, if the sex-linked recessive lethal test in *Drosophila melanogaster* conducted pursuant to paragraph (c)(1)(i)(A) of this section produces a positive result.

(ii) *Test standards.* (A) The testing for the sex-linked recessive lethal assay shall be conducted in accordance with the following revised EPA-approved modified study plan (June 19, 1986) originally submitted by the Diethylenetriamine Producers/Importers Alliance (DPIA): ''Sex-linked recessive lethal test in *Drosophila melanogaster*,'' with modifications as approved by EPA on March 9, 1987, and May 21, 1987.

(B) The testing for the mouse visible specific locus assay shall be conducted in accordance with the following revised EPA-approved modified study plan (June 19, 1986) originally submitted by the Diethylenetriamine Producers/Importers Alliance (DPIA): ''Mouse specific locus test for visible markers.''

(C) These revised EPA-approved modified study plans are available for inspection in the Non-Confidential Information Center (NCIC) (7407), Office of Pollution Prevention and Toxics, U.S. Environmental Protection Agency, Room B–607 NEM, 401 M St., SW., Washington, DC 20460, between the hours of 12 p.m. and 4 p.m. weekdays excluding legal holidays.

(iii) *Reporting requirements.* (A) The sex-linked recessive lethal test of DETA in *Drosophila melanogaster* shall be completed and a final report submitted to the Agency within 14 months from the effective date of the final Phase II rule. Two interim progress reports shall be submitted at 6-month intervals, the first of which is due within 6 months of the effective date of the final Phase II rule.

(B) If required pursuant to paragraph (c)(1)(i)(B) of this section, the mouse specific locus test of DETA for visible markers shall be completed and a final report submitted to the Agency within 48 months from the designated date contained in EPA's notification of the test sponsor by certified letter or FEDERAL REGISTER notice that testing should be initiated. Seven interim progress reports shall be submitted at 6-month intervals, the first of which is due within 6 months of EPA's designated date.

(2) *Mutagenic effects—Chromosomal aberrations*—(i) *Required testing.* (A) An *in vitro* cytogenetics test shall be conducted with DETA.

(B) An *in vivo* cytogenetics test shall be conducted with DETA, if the *in vitro* cytogenetics test conducted pursuant to paragraph (c)(2)(i)(A) of this section produces a negative result.

(C) A dominant lethal assay shall be conducted with DETA, if either the *in vitro* cytogenetics test conducted pursuant to paragraph (c)(2)(i)(A) of this section or the *in vivo* cytogenetics test conducted pursuant to paragraph (c)(2)(i)(B) of this section produces a positive result.

(D) A heritable translocation assay shall be conducted with DETA, if the dominant lethal assay conducted pursuant to paragraph (c)(2)(i)(C) of this section produces a positive result.

(ii) *Test standards.* (A) The testing for cytogenetic effects shall be conducted in accordance with the following revised EPA-approved modified study plan (June 19, 1986) originally submitted by the Diethylenetriamine Producers/Importers Alliance (DPIA): ''*In vitro* cytogenetics test'' and ''*In vivo* cytogenetics test,'' with modifications as approved by EPA on March 9, 1987, and May 21, 1987.

(B) Other testing for cytogenetic effects shall be conducted in accordance with the following revised EPA-approved modified study plans (June 19, 1986) originally submitted by the Diethylenetriamine Producers/Importers Alliance (DPIA): ''Dominant lethal assay of diethylenetriamine in CD rats,'' and ''Heritable translocation of diethylenetriamine in CD–1 mice.''

(C) These revised EPA-approved modified study plans are available for inspection in the Non-Confidential Information Center (NCIC) (7407), Office of Pollution Prevention and Toxics, U.S. Environmental Protection Agency, Room B– 607 NEM, 401 M St., SW., Washington, DC 20460, between the hours of 12 p.m. and 4 p.m. weekdays excluding legal holidays.

(iii) *Reporting requirements.* (A) The *in vitro* cytogenetics testing of DETA shall be completed and a final report submitted to the Agency within 6 months of the effective date of the final Phase II rule.

(B) If required pursuant to paragraph (c)(2)(i)(B) of this section, the *in vivo* cytogenetics testing of DETA shall be completed and final report submitted to the Agency within 14 months of the effective date of the final Phase II rule. One interim progress report shall be submitted within 12 months of the final rule's effective date.

(C) If required pursuant to paragraph (c)(2)(i)(C) of this section, the dominant lethal testing of DETA shall be completed and a final report submitted to the Agency within 20 months of the effective date of the final Phase II rule.

(D) If required pursuant to paragraph (c)(2)(i)(D) of this section, the heritable translocation testing of DETA shall be completed and a final report submitted to the Agency within 18 months of the designated date contained in EPA's notification of the test sponsor by certified letter or FEDERAL REGISTER notice that testing should be initiated. Two interim progress reports shall be submitted at 6-month intervals, the first of which is due within 6 months of EPA's designated date.

(3) *Subchronic effects*—(i) *Required testing.* A ninety-day oral subchronic toxicity test shall be conducted with DETA in at least one mammalian species.

(ii) *Test standard.* The testing shall be conducted in accordance with the following revised EPA-approved modified study plans (June 19, 1986) originally submitted by the Diethylenetriamine Producers/Importers Alliance (DPIA): ''Ninety-Day (subchronic) dietary toxicity study with diethylenetriamine in albino rats,'' with modifications approved by EPA on March 9, 1987, and May 21, 1987. This revised EPA-approved modified study plans is available for inspection in the Non-Confidential Information Center (NCIC) (7407), Office of Pollution Prevention and Toxics, U.S. Environmental Protection Agency, Room B–607 NEM, 401 M St., SW., Washington, DC 20460, between the hours of 12 p.m. and 4 p.m. weekdays excluding legal holidays.

(iii) *Reporting requirements.* The testing shall be completed and a final report submitted to the Agency within 15 months of the effective date of the final Phase II rule. Two interim progress reports shall be submitted at 6-month intervals, the first of which is due within 6 months of the effective date of the final Phase II rule.

(d) *Chemical fate testing*—(1) *Required testing.* Testing to assess *N*-nitrosamine formation, resulting from aerobic biological and/or chemical transformation, shall be conducted with DETA using environmental samples of lake water, sewage, and soil.

(2) *Test standard.* The testing shall be conducted in accordance with the following revised EPA-approved modified study plan (June 7, 1990) originally submitted by the Diethylenetriamine Producers/Importers Alliance (DPIA): ''Modified Final Copy (04–17–90); Diethylenetriamine: Environmental Fate in Sewage, Lake Water and Soil''. This revised EPA-approved modified study plans are available for inspection in the Non-Confidential Information

Center (NCIC) (7407), Office of Pollution Prevention and Toxics, U.S. Environmental Protection Agency, Room B–607 NEM, 401 M St., SW., Washington, DC 20460, between the hours of 12 p.m. and 4 p.m. weekdays excluding legal holidays.

(3) *Reporting requirements*. The testing shall be completed and a final report submitted to EPA within 20 months of the effective date of the final Phase II rule. Interim progress reports shall be submitted at 6–month intervals, the first of which is due within 6 months of the effective date of the final Phase II rule.

(e) *Modifications*. Persons subject to this section are not subject to the requirements of § 790.50(a)(2)(ii) of this chapter.

(f) *Effective date*. (1) The effective date of the final Phase II rule for diethylenetriamine is March 19, 1987, except for paragraphs (c)(4)(iii), (d)(2), and (d)(3) of this section. The effective date of paragraphs (c)(4)(iii), and (d)(3) of this section is March 1, 1990. The effective date for paragraph (d)(2) of this section is May 21, 1991.

(2) The guidelines and other test methods cited in this rule are referenced as they exist on the effective date of the final rule.

[50 FR 21412, May 23, 1985; 50 FR 33543, Aug. 20, 1985; 51 FR 3468, Jan. 28, 1986; 51 FR 4736, Feb. 7, 1986; 52 FR 3238, Feb. 3, 1987; 54 FR 27356, June 29, 1989; 55 FR 3408, Feb. 1, 1990; 55 FR 7326, Mar. 1, 1990; 56 FR 23230, May 21, 1991; 58 FR 34205, June 23, 1993; 60 FR 34467, July 3, 1995]

§ 799.1645 2-Ethylhexanol.

(a) *Identification of test substance*. (1) 2-Ethylhexanol (CAS No. 104–76–7) shall be tested in accordance with this section.

(2) 2-Ethylhexanol of at least 99.0-percent purity shall be used as the test substance.

(b) *Persons required to submit study plans, conduct tests, and submit data*. All persons who manufacture or process, or intend to manufacture or process 2-ethylhexanol, other than as an impurity, from the effective date of this final rule to the end of the reimbursement period shall submit letters of intent to conduct testing, submit study plans, conduct tests, and submit data or exemption applications as specified in this section, subpart A of this part, and parts 790 and 792 of this chapter for single-phase rulemaking.

(c) *Health effects*—(1) *Oncogenic effects*—(i) *Required testing*. (A) Oncogenicity tests shall be conducted in Fisher 344 rats and B6C3F1 mice by the oral route with 2-ethylhexanol in accordance with § 798.3300 of this chapter, except for the provisions in § 798.3300(b)(6).

(B) For the purpose of this section, the following provisions also apply to the oncogenicity tests: (*1*) *Administration of the test substance*. 2-Ethylhexanol shall be administered either by microencapsulation before adding it to the diet or by gavage.

(*2*) [Reserved]

(ii) *Reporting requirements*. (A) The study plan for the oncogenicity test shall be submitted at least 45 days before the initiation of testing.

(B) The oncogenicity testing shall be completed and final report submitted to the Agency within 53 months of the effective date of this final rule if 2-ethylhexanol is administered by gavage or within 56 months of the effective date of this final rule if administered by microencapsulation.

(C) Interim progress reports shall be submitted to EPA at 6-month intervals beginning 6 months after the effective date of the final rule, until the final report is submitted to EPA.

(2) [Reserved]

(d) *Effective date*. The effective date of this final rule requiring oncogenicity testing of 2-ethylhexanol is September 16, 1987.

[52 FR 28704, Aug. 3, 1987, as amended at 58 FR 34205, June 23, 1993]

§ 799.1700 Fluoroalkenes.

(a) *Identification of test substances*. (1) Vinyl fluoride (VF; CAS No. 75–02–5), vinylidene fluoride (VDF; CAS No. 75–38–7), tetrafluoroethene (TFE; CAS No. 116–14–3), and hexafluoropropene (HFP; CAS No. 116–15–4) shall be tested in accordance with this section.

(2) VF, VDF, TFE, and HFP of at least 99 percent purity shall be used as the test substances.

(b) *Persons required to submit study plans, conduct tests and submit data*. All persons who manufacture VF, VDF,

TFE, or HFP, other than as an impurity, from July 22, 1987 to the end of the reimbursement period shall submit letters of intent to conduct testing or exemption applications, submit study plans, conduct tests in accordance with the TSCA Good Laboratory Practice Standards (40 CFR part 792), and submit data as specified in this section, subpart A of this part, and part 790 of this chapter for single-phase rulemaking, for the substances they manufacture.

(c) *Health effects testing*—(1) *Mutagenic effects—Gene mutation*—(i) *Required testing*. (A) (*1*) A detection of gene mutations in somatic cells in culture assay shall be conducted with TFE and HFP in accordance with §798.5300 of this chapter except for the provisions in paragraphs (c), (d)(3)(i), (4), (5) and (6) and (e).

(*2*) For the purposes of this section, the following provisions also apply:

(*i*) *Reference substances*. No reference substance is required.

(*ii*) *Test method—Type of cells used in the assay*. Mutation induction at the HPRT locus shall be measured in Chinese hamster ovary (CHO) cells. Cells shall be checked for Mycoplasma contamination and may also be checked for karyotype stability.

(*iii*) *Test method—Metabolic activation*. Cells shall be exposed to the test substance only in the presence of a metabolic activation system for TFE, and in both the presence and absence of a metabolic activation system for HFP. The metabolic activation system shall be derived from the post-mitochondrial fraction (S–9) of livers from rats pretreated with Aroclor 1254.

(*iv*) *Test method—Control groups*. Positive and negative controls shall be included in each experiment. In assays with metabolic activation, the positive control substance shall be known to require such activation. Nitrogen shall serve as the negative control and diluting gas.

(*v*) *Test method—Test chemicals*. The test should be designed to have a predetermined sensitivity and power. The number of cells, cultures, and concentrations of test substance used should reflect these defined parameters. The number of cells per culture is based on the expected background mutant frequency; a general guide is to use a number which is 10 times the inverse of this frequency. Several concentrations (usually at least four) of the test substance shall be used. These shall yield a concentration-related toxic effect. The highest concentration shall produce a low level of survival (approximately 10 percent), and the survival in the lowest concentration shall approximate that of the negative control. Cytotoxicity shall be determined after treatment with the test substance both in the presence and in the absence of the metabolic activation system.

(*vi*) *Test performance*. Cells in treatment medium with and without metabolic activation shall be exposed to varying concentrations of test gas-air mixtures by flushing treatment flasks (or chambers) with 10 volumes of test gas-air mixture at a rate of 500 mL/min or that rate which will allow complete flushing within 1 minute. In the case of a test chamber volume of 1.67 L, a flow rate of 10 L/min is appropriate. Each flask shall be closed with a cap with a rubber septum. Headspace samples shall be taken at the beginning and end of the exposure period and analyzed to determine the amount of test gas in each flask. Flasks shall be incubated on a rocker panel at 37 °C for 5 hours for tests with metabolic activation. For the non-activated portion of the test, the incubation time shall be 18 to 19 hours at 37 °C. At the end of the exposure period, cells treated with metabolic activation shall be washed and incubated in culture medium for 21 to 26 hours prior to subculturing the viability and expression of mutant phenotype. Cells treated without metabolic activation shall be washed and subcultured immediately to determine viability and to allow for expression of mutant phenotype. Appropriate subculture schedules (generally twice during the expression period) shall be used. At the end of the expression period, which shall be sufficient to allow near optimal phenotypic expression of induced mutants (generally 7 days for this cell system), cells shall be grown in medium with and without selective agent

for determination of numbers of mutants and cloning efficiency, respectively. This last growth period is generally 7 days at 37 °C. Results of this test shall be confirmed in an independent experiment.

(B)(*1*) A sex-linked recessive lethal test in *Drosophila melanogaster* shall be conducted with VDF and VF in accordance with § 798.5275 of this chapter except for the provisions in paragraph (d)(5). This test shall also be performed with TFE or HFP if the somatic cells in culture assay conducted pursuant to paragraph (c)(1)(i)(A) of this section produces a positive result.

(*2*) For the purposes of this section the following provisions also apply:

(*i*) *Test chemicals*. It is sufficient to test a single dose of the test substance. This dose shall be the maximum tolerated dose or that which produces some indication of toxicity. Exposure shall be by inhalation.

(*ii*) [Reserved]

(C)(*1*) A mouse visible specific locus assay (MVSL) shall be conducted with VF, VDF, TFE, and HFP in accordance with § 798.5200 of this chapter, except for the provisions of paragraph (d)(5) of § 798.5200, or a mouse biochemical-specific locus assay (MBSL) shall be conducted with VF, VDF, TFE, and HFP in accordance with § 798.5195 of this chapter, except for the provisions of paragraph (d)(5) of § 798.5195, for whichever of these substances produces a positive test result in the sex-linked recessive lethal test in *Drosophila melanogaster* conducted pursuant to paragraph (c)(1)(i)(B) of this section if, after a public program review, EPA issues a FEDERAL REGISTER notice or sends a certified letter to the test sponsor specifying that the testing shall be initiated.

(*2*) For the purposes of this section, the following provisions also apply:

(*i*) *Test chemicals*. A minimum of two dose levels shall be tested. The highest dose tested shall be the highest dose tolerated without toxic effects, provided that any temporary sterility induced due to elimination of spermatagonia is of only moderate duration, as determined by a return of males to fertility within 80 days after treatment, or shall be the highest dose attainable. Animals shall be exposed to the test substance by inhalation. Exposure shall be for 6 hours a day. Duration of exposure shall be dependent upon accumulated total dose desired for each group.

(*ii*) [Reserved]

(ii) *Reporting requirements*. (A) Mutagenic effects-gene mutation tests shall be completed and the final reports shall be submitted to EPA as follows: Somatic cells in culture assay, within 6 months after the effective date of the final rule; *Drosophila* sex-linked recessive lethal, within 9 months (for VF and VDF) and within 15 months (for TFE and HFP) after the effective date of the final rule; MVSL or MBSL, within 51 months after the date of EPA's notification of the test sponsor by certified letter or FEDERAL REGISTER notice that testing shall be initiated.

(B) Progress reports shall be submitted to the Agency every 6 months beginning 6 months after the effective date of the final rule or receipt of notice that testing shall be initiated.

(2) *Mutagenic effects—Chromosomal aberrations*—(i) *Required testing*. (A)(*1*) A mouse micronucleus cytogenetics test shall be conducted with VDF and TFE in accordance with § 798.5395 of this chapter except for the provisions in paragraphs (d)(5) (i), (ii), and (iii).

(*2*) For the purposes of this section, the following provisions also apply:

(*i*) *Test method—Vehicle*. No vehicle is required.

(*ii*) *Test method—Dose levels*. Three dose levels shall be used. The highest dose tested shall be the maximum tolerated dose, that dose producing some indication of cytotoxicity (e.g., a change in the ratio of polychromatic to normochromatic erythrocytes, or the highest dose attainable).

(*iii*) *Test method—route of administration*. Animals shall be exposed by inhalation with a single 6-hour exposure, with three sampling times between 20 and 72 hours.

(B)(*1*) For each respective test substance, a dominant lethal assay shall be conducted with VF and HFP in accordance with § 798.5450 of this chapter except for the provisions in paragraphs (d)(2)(i), (4) (i), (5) and (e). This test shall also be performed with TFE or VDF if the mouse micronucleus cytogenetics test conducted pursuant to

paragraph (c)(2)(i)(A) of this section produces a positive result.

(*2*) For the purposes of this section, the following provisions also apply:

(*i*) *Test method—Description*. For this assay, the test substance shall be administered by inhalation for 5 consecutive days for 6 hours per day.

(*ii*) *Test method—Concurrent controls*. Concurrent positive and negative (vehicle) controls shall be included in each experiment.

(*iii*) *Test method—Test chemicals*. Exposure shall be by inhalation for 5 consecutive days for 6 hours per day. Three dose levels shall be used. The highest dose shall produce signs of toxicity (e.g., slightly reduced fertility) or shall be the highest attainable.

(*iv*) *Test performance*. Individual males shall be mated sequentially to 1 or 2 virgin females. Females shall be left with the males for at least the duration of one estrus cycle or alternatively until mating has occurred as determined by the presence of sperm in the vagina or by the presence of a vaginal plug. In any event, females shall be left with the males for no longer than 7 days. The number of matings following treatment shall ensure that germ cell maturation is adequately covered. Mating shall continue for at least 6 weeks. Females shall be sacrificed in the second half of pregnancy, and uterine contents shall be examined to determine the number of implants and live and dead embryos. The examination of ovaries to determine the number of corpora lutea is left to the discretion of the investigator.

(C)(*1*) A heritable translocation assay shall be conducted with VF, VDF, TFE, or HFP in accordance with § 798.5460 of this chapter except for the provisions of paragraphs (d)(3)(i), (5), and (e)(1), if the dominant lethal assay conducted for that substance pursuant to paragraph (c)(2)(i)(B) of this section produces a positive result and if, after a public program review, EPA issues a FEDERAL REGISTER notice or sends a certified letter to the test sponsor specifying that the testing shall be initiated.

(*2*) For the purposes of this section, the following provisions also apply:

(*i*) *Test method—Animal selection*. The mouse shall be used as the test species.

(*ii*) *Test method*. No vehicle is required. At least two dose levels shall be used. The highest dose level shall result in toxic effects (which shall not produce an incidence of fatalities which would preclude a meaningful evaluation) or shall be the highest dose attainable. Animals shall be exposed by inhalation.

(*iii*) *Test performance—Treatment and mating*. The animals shall be dosed with the test substance 6 hours per day, 7 days per week over a period of 35 days. After treatment, each male shall be caged with 2 untreated females for a period of 1 week. At the end of 1 week, females shall be separated from males and caged individually. When females give birth, the date of birth, litter size and sex of progeny shall be recorded. All male progeny shall be weaned and all female progeny shall be discarded.

(ii) *Reporting requirements*. (A) Mutagenic effects-chromosomal aberration testing shall be completed and final results submitted to EPA after the effective date of the rule as follows: mouse micronucleus cytogenetics for VDF by November 22, 1988, and for TFE within 10 months after the effective date of the final rule; dominant lethal assay for VF and HFP by October 22, 1988, and for VDF and TFE within 19 months after the effective date of the rule; heritable translocation assay, within 25 months after the date of EPA's notification of the test sponsor by certified letter or FEDERAL REGISTER notice that testing shall be initiated.

(B) Progress reports shall be submitted to the Agency every 6 months beginning 6 months after the effective date of the final rule or receipt of notice that testing shall be initiated.

(3) *Subchronic toxicity*—(i) *Required Testing*. (A) An inhalation subchronic toxicity test shall be conducted with HFP in accordance with the TSCA Test Guideline specified in § 798.2450 of this chapter except for the provisions in paragraphs (d)(5), (10)(v), and (e)(3)(iv)(D).

(B) For the purpose of this section the following provisions also apply:

(*1*) *Test procedures—Exposure conditions*. The animals shall be exposed to the test substance 6 hours per day, 5 days per week for 90 days.

(*2*) *Test procedures—Observation of animals*. Animals shall be weighted weekly, and food and water consumption shall also be measured weekly.

(*3*) *Test report—Individual animal data*. Food and water consumption data shall be reported.

(ii) *Reporting requirements*. (A) The required subchronic toxicity test shall be completed and final results submitted to the Agency within 18 months after the effective date of the final rule.

(B) Progress reports shall be submitted to the Agency every 6 months beginning 6 months after the effective date of the final rule.

(4) *Oncogenicity*—(i) *Required testing*. (A) (*1*) Oncogenicity tests shall be conducted in both rats and mice by inhalation with VF in accordance with § 798.3300 of this chapter, except for the provisions in paragraph (b)(7)(vi) of § 798.3300.

(*2*) For the purposes of this section, the following provisions also apply:

(*i*) *Test procedures—observations of animals*. All mice of test groups in which survival is approximately 25 percent of mice at risk (approximately 25 percent of 70, or approximately 18 mice) will be sacrificed near the time that 25 percent survival is achieved. All mice surviving the 18–month test period will be sacrificed and necropsied. The order of sacrifice for mice at all pathological evaluations will be random among all exposure groups within a sex. Moribund animals should be removed and sacrificed when noticed.

(*ii*) All rats of test groups in which survival is approximately 25 percent of rats at risk (approximately 25 percent of 60, or approximately 15 rats) will be sacrificed near the time that 25 percent survival is achieved. All rats surviving the 24–month test period will be sacrificed and necropsied. The order of sacrifice for rats at all pathological evaluations will be random among all exposure groups within a sex. Moribund animals should be removed and sacrificed when noticed.

(B) Oncogenicity testing shall be conducted in mice with VDF in accordance with § 798.3300 of this chapter.

(C) [Reserved]

(D) Oncogenicity tests shall also be conducted by inhalation in both rats and mice with TFE in accordance with § 798.3300 of this chapter if TFE yields a positive test result in any one of the following mutagenicity tests: The *in vitro* cytogenetics assay conducted pursuant to paragraph (c)(2)(i)(A) of this section, the mouse micronucleus cytogenetics assay conducted pursuant to paragraph (c)(2)(i)(B) of this section, the mammalian cells in culture assay conducted pursuant to paragraph (c)(1)(i)(A) of this section or the sex-linked recessive lethal assay in *Drosophila melanogaster* conducted pursuant to paragraph (c)(1)(i)(B) of this section if, after a public program review, EPA issues a FEDERAL REGISTER notice or sends a certified letter to the test sponsor specifying that the testing shall be initiated. Criteria for positive test results are established in 40 CFR 798.5375, 798.5385, 798.5300 and 798.5275 of this chapter, respectively.

(ii) *Reporting requirements*. (A) The oncogenicity testing for VDF shall be completed and the final results submitted to the Agency by March 23, 1992. The oncogenicity testing for VF shall be completed and the final results submitted to the Agency by July 22, 1992. For TFE and HFP, the oncogenicity testing shall be completed and the final results submitted to the Agency within 56 months after the date of EPA's notification of the test sponsor by certified letter or FEDERAL REGISTER notice that testing shall be initiated.

(B) Progress reports shall be submitted every 6 months beginning 6 months after the effective date of the final rule for VF and VDF and beginning 6 months after notification by certified letter or FEDERAL REGISTER notice that testing is to begin for TFE and HFP.

(d) *Effective date*. (1) The effective date of the final rule is July 22, 1987, except for paragraphs (c)(1)(i)(C)(1), (c)(1)(ii)(A), (c)(4)(i) and(c)(4)(ii)(A) of this section. The effective date of paragraphs (c)(1)(i)(C)(*1*) and (c)(1)(ii)(A) of this section is May 21, 1990. The effective date of paragraphs (c)(4)(i)(A)(*1*) (c)(4)(i)(A)(*2*)(*i*), (c)(4)(i)(B) and (c)(4)(i)(D) of this section is May 21, 1991. The effective date for paragraphs (c)(4)(i)(A)(*2*)(*ii*) and (c)(4)(i)(C) of this section is June 12, 1992. The effective

date of paragraph (c)(4)(ii)(A) of this section is May 28, 1993.

(2) The guidelines and other test methods cited in this rule are referenced as they exist on the effective date of the final rule.

[52 FR 21530, June 8, 1987, as amended at 52 FR 43762, Nov. 16, 1987; 54 FR 27357, June 29, 1989; 54 FR 33148, Aug. 11, 1989; 55 FR 12643, Apr. 5, 1990; 56 FR 23230, May 21, 1991; 57 FR 24960, June 12, 1992; 58 FR 30992, May 28, 1993; 58 FR 34205, June 23, 1993]

§ 799.2155 Commercial hexane.

(a) *Identification of test substance.* (1) ''Commercial hexane,'' for purposes of this section, is a product obtained from crude oil, natural gas liquids, or petroleum refinery processing in accordance with the American Society for Testing and Materials Designation D 1836–83 (ASTM D 1836), consists primarily of six-carbon alkanes or cycloalkanes, and contains at least 40 liquid volume percent *n*-hexane (CAS No. 110–54–3) and at least 5 liquid volume percent methylcyclopentane (MCP; CAS No. 96–37–7). ASTM D 1836, formally entitled ''Standard Specification for Commercial Hexanes,'' is published in *1986 Annual Book of ASTM Standards: Petroleum Products and Lubricants,* ASTM D 1836–83, pp. 966–967, 1986, is incorporated by reference, and is available for public inspection at the National Archives and Records Administration (NARA). For information on the availability of this material at NARA, call 202–741–6030, or go to: *http://www.archives.gov/federal_register/code_of_federal_regulations/ibr_locations.html.* This incorporation by reference was approved by the Director of the Office of the Federal Register in accordance with 5 U.S.C. 522(a) and 1 CFR part 51. This material is incorporated as it exists on the date of approval, and a notice of any change in this material will be published in the FEDERAL REGISTER. Copies of the incorporated material may be obtained from the Director, Environmental Assistance Division (7408), Office of Pollution Prevention and Toxics, Environmental Protection Agency, Rm. E–543B, 1200 Pennsylvania Ave. NW., Washington, DC 20460–0001.

(2) The commercial hexane test substance, for purposes of this section, is a product which conforms to the specifications of ASTM D1836 and contains at least 40 liquid volume percent but no more than 55 liquid volume percent *n*-hexane and no less than 10 liquid volume percent MCP.

(b) *Persons required to submit study plans, conduct tests, and submit data.* All persons who manufacture (including import) or process or intend to manufacture or process commercial hexane, as defined in paragraph (a)(1) of this section and other than as an impurity, from the effective date of the final rule to the end of the reimbursement period shall submit letters of intent to conduct testing, submit study plans, conduct tests in accordance with part 792 of this chapter, and submit data, or submit exemption applications, as specified in this section, subpart A of this part, and part 790 of this chapter for single-phase rulemaking. Persons who manufacture commercial hexane as a byproduct are covered by the requirements of this section. Notwithstanding § 790.50(a)(1) of this chapter, persons who notify EPA of their intent to conduct neurotoxicity testing in compliance with paragraph (c)(7) of this section may submit study plans for those tests less than 45 days before beginning testing provided that EPA receives the study plans before this testing begins.

(c) *Health effects testing*—(1) *Subchronic inhalation toxicity*—(i) *Required testing.* (A) A subchronic inhalation toxicity test shall be conducted with commercial hexane in accordance with § 798.2450 of this chapter except for the provisions in paragraphs (d)(4)(ii) and (5) of § 798.2450.

(B) For the purposes of this section, the following provisions also apply:

(*1*) *High dose level.* The highest concentration should result in toxic effects but neither produce an incidence of fatalities which would prevent a meaningful evaluation nor exceed the lower explosive limit of commercial hexane.

(*2*) *Exposure conditions.* Animals shall be dosed for 6 hours/day, 5 days/week for 90 days.

(ii) *Reporting requirements.* (A) The subchronic inhalation toxicity test shall be completed and the final report

submitted to EPA within 15 months of the effective date of the final rule.

(B) Interim progress reports shall be submitted to EPA for the subchronic inhalation toxcity test at 6-month intervals beginning 6 months after the effective date of the final rule, until the final report is submitted to EPA.

(2) *Oncogenicity*—(i) *Required testing.* (A) An oncogenicity test shall be conducted with commercial hexane in accordance with § 798.3300 of this chapter except for the provisions in paragraphs (b)(3)(ii) and (6) of § 798.3300.

(B) For the purposes of this section, the following provisions also apply:

(*1*) *High dose level.* The high dose level should elicit signs of minimal toxicity without substantially altering the normal life span and should not exceed the lower explosive limit of commercial hexane.

(*2*) *Administration of test substance.* Animals shall be exposed to commercial hexane by inhalation.

(ii) *Reporting requirements.* (A) The oncogenicity test shall be completed and the final report submitted to EPA within 53 months of the effective date of the final rule. The mouse portion of the oncogenicity study shall be submitted by June 5, 1993.

(B) Interim progress reports shall be submitted to EPA for the oncogenicity test at 6-month intervals beginning 6 months after the effective date of the final rule, until the final report is submitted to EPA.

(3) *Reproduction and fertility effects*—(i) *Required testing.* (A) A reproduction and fertility effects test shall be conducted with commercial hexane in accordance with § 798.4700 of this chapter except for the provisions in paragraphs (c)(3)(ii) and (5) of § 798.4700.

(B) For the purposes of this section, the following provisions also apply:

(*1*) *High dose level.* The highest dose level should induce toxicity but not high levels of mortality in the parental (P) animals. In addition, the highest dose level should not exceed the lower explosive limit of commercial hexane.

(*2*) *Administration of test substance.* Animals shall be exposed to commercial hexane by inhalation.

(ii) *Reporting requirements.* (A) The reproduction and fertility effects test shall be completed and the final report submitted to EPA within 29 months of the effective date of the final rule.

(B) Interim progress reports shall be submitted to EPA for the reproduction and fertility effects test at 6-month intervals beginning 6 months after the effective date of the final rule, until the final report is submitted to EPA.

(4) *Inhalation developmental toxicity*—(i) *Required testing.* (A) An inhalation developmental toxicity test shall be conducted with commercial hexane in accordance with § 795.4350 of this chapter except for the provisions in paragraph (e)(3)(iv) of § 798.4350.

(B) For the purposes of this section, the following provisions also apply:

(*1*) *High dose level.* Unless limited by the physical/chemical nature or biological properties of the test substance, the highest concentration level shall induce some overt maternal toxicity such as reduced body weight or body weight gain, but not more than 10 percent maternal deaths. In addition, the highest dose level should not exceed the lower explosive limit of commercial hexane.

(*2*) [Reserved]

(ii) *Reporting requirements.* (A) The inhalation developmental toxicity test shall be completed and the final report submitted to EPA within 12 months of the effective date of the final rule.

(B) Interim progress reports shall be submitted to EPA for the inhalation developmental toxicity test at 6-month intervals beginning 6 months after the effective date of the final rule, until the final report is submitted to EPA.

(5) *Mutagenic effects—gene mutations*—(i) *Required testing.* (A)(*1*) A *Salmonella typhimurium* reverse mutation assay shall be conducted with commercial hexane in accordance with § 798.5265 of this chapter except for the provisions in paragraphs (d)(4) and (e) of § 798.5265.

(*2*) For the purposes of this section, the following provisions also apply:

(*i*) *Metabolic activation.* Bacteria shall be exposed to commercial hexane both in the presence and absence of an appropriate metabolic activation system.

(*ii*) *Test performance.* The assay shall be performed using the desiccator method described as follows: The agar overlay plates shall be placed uncovered in a 9-liter desiccator. A volume of the liquid test substance shall be added

to the glass Petri dish suspended beneath the porcelain shelf of the desiccator. The highest exposure concentration should not result in a vapor concentration which exceeds the lower explosive limit of commerical hexane. A magnetic stirring bar to serve as a fan to assure rapid and even distribution of the vapor shall be placed on the bottom of the inside of the desiccator. The desiccator shall be placed on a magnetic stirrer within a 37 °C room or chamber for 7 to 10 hours. The plates shall then be removed, their lids replaced, followed by incubation for an additional 40 hours at 37 °C before counting. An appropriate selective medium with an adequate overlay agar shall be used. All plating should be done in at least triplicate.

(B)(*1*) A gene mutation test in mammalian cells shall be conducted with commercial hexane in accordance with § 798.5300 of this chapter except for the provisions in paragraphs (d)(3)(ii) and (4) of § 798.5300 if the results from the *Salmonella typhimurium* test conducted pursuant to paragraph (c)(5)(i)(A) of this section are negative.

(*2*) For the purposes of this section, the following provisions also apply:

(*i*) *Cell growth and maintenance.* Appropriate culture media and incubation conditions (culture vessels, CO_2 concentrations, temperature, and humidity) shall be used. The cell culture shall be directly dosed by pipetting liquid commercial hexane mixed with liquid DMSO into the culture medium. Cells shall be exposed to test substance both in the presence and absence of an appropriate metabolic activation system.

(*ii*) [Reserved]

(C)(*1*) A sex-linked recessive lethal test in *Drosophila melanogaster* shall be conducted with commercial hexane in accordance with § 798.5275 of this chapter except for the provisions in paragraphs (d)(5) (ii) and (iii) of § 798.5275, unless the results of both the *Salmonella typhimurium* test conducted pursuant to paragraph (c)(5)(i)(A) of this section and the mammalian cells in the culture gene mutation test conducted pursuant to paragraph (c)(5)(i)(B) of this section, if required, are negative.

(*2*) For the purposes of this section, the following provisions also apply:

(*i*) *Dose levels.* For the initial assessment of mutagenicity, it is sufficient to test a single dose of the test substance for screening purposes. This dose should be the maximum tolerated dose, or that which produces some indication of toxicity or shall be the highest dose attainable and should not exceed the lower explosive limit of commercial hexane. For dose-response purposes, at least three additional dose levels should be used.

(*ii*) *Route of administration.* The route of administration shall be by exposure to commercial hexane vapors.

(D)(*1*) Unless the results of the sex-linked recessive lethal test in *Drosophila melanogaster* conducted with commercial hexane pursuant to paragraph (c)(5)(i)(C) of this section are negative, EPA shall conduct a public program review of all of the mutagenicity data available for this substance. If, after this review, EPA decides that testing of commercial hexane for causing heritable gene mutations in mammals is necessary, it shall notify the test sponsor by certified letter or FEDERAL REGISTER notice that testing shall be initiated in either the mouse visible specific locus test or the mouse biochemical specific locus test. The mouse visible specific locus test, if conducted, shall be performed for commercial hexane in accordance with § 798.5200 of this chapter except for the provisions in paragraphs (d)(5)(ii) and (d)(5)(iii) of § 798.5200. The mouse biochemical specific locus test, if conducted, shall be performed for commercial hexane in accordance with § 798.5195 of this chapter except for the provisions in paragraphs (d)(5)(ii) and (d)(5)(iii) of § 798.5195.

(*2*) For the purposes of this section, the following provisions also apply:

(*i*) *Dose levels.* A minimum of two dose levels shall be tested. The highest dose tested shall be the highest dose tolerated without toxic effects, provided that any temporary sterility induced due to elimination of spermatogonia is of only moderate duration, as determined by a return of males to fertility within 80 days of treatment, or shall be the highest dose attainable below the lower explosive

limit concentration of commercial hexane. Exposure shall be for 6 hours a day. Duration of exposure shall be dependent upon the accumulated total dose desired for each group.

(*ii*) *Route of administration*. Animals shall be exposed to commercial hexane by inhalation.

(ii) *Reporting requirements*. (A) The gene mutation tests shall be completed and final reports submitted to EPA as follows:

(*1*) The *Salmonella typhimurium* reverse mutation assay within 8 months of the effective date of the final rule.

(*2*) The gene mutation in mammalian cells assay within 17 months of the effective date of the final rule.

(*3*) The sex-linked recessive-lethal test in *Drosophila melanogaster* within 24 months of the effective date of the final rule.

(*4*) The mouse visible specific locus test or the mouse biochemical specific locus test shall be completed and a final report shall be submitted to EPA within 51 months of the date on which the test sponsor is notified by EPA by certified letter or FEDERAL REGISTER notice that testing shall be initiated.

(B) Interim progress reports for each test shall be submitted to EPA for the gene mutation in mammalian cells assay and *Drosophila* sex-linked recessive lethal test at 6-month intervals beginning 6 months after the effective date of the final rule, until the applicable final report is submitted to EPA.

(C) Interim progress reports for either the mouse visible specific locus test or the mouse biochemical specific locus test shall be submitted to EPA at 6–month intervals, beginning 6 months after EPA's notification of the test sponsor that testing should be initiated, until the applicable final report is submitted to EPA.

(6) *Mutagenic effects—chromosomal aberrations*—(i) *Required testing*. (A)(*1*) An *in vitro* cytogenetics test shall be conducted with commercial hexane in accordance with § 798.5375 of this chapter except for the provisions in paragraph (e)(3) of § 798.5375.

(*2*) For the purposes of this section, the following provisions also apply:

(*i*) *Treatment with test substance*. The test substance shall be added in liquid form mixed with DMSO to the treatment vessels.

(*ii*) [Reserved]

(B)(*1*) An *in vivo* cytogenetics test shall be conducted with commercial hexane in accordance with § 798.5385 of this chapter except for the provisions in paragraphs (d)(5) (ii), (iii) and (iv) of § 798.5385, if the *in vitro* test conducted pursuant to paragraph (c)(6)(i)(A) of this section is negative.

(*2*) For the purposes of this section, the following provisions also apply:

(*i*) *Dose levels*. For an initial assessment, one dose level of the test substance may be used, the dose being the maximum tolerated dose (to a maximum of 5,000 mg/kg), or that producing some indication of cytotoxicity (e.g., partial inhibition of mitosis), or shall be the highest dose attainable (to a maximum of 5,000 mg/kg) and should not exceed the lower explosive limit of commercial hexane. Additional dose levels may be used. For determination of dose-response, at least three dose levels should be used.

(*ii*) *Route of administration*. Animals shall be exposed to commercial hexane by inhalation.

(*iii*) *Treatment schedule*. The duration of exposure shall be for 6 hours per day for 5 consecutive days.

(C)(*1*) A dominant lethal assay shall be conducted with commercial hexane in accordance with § 798.5450 of this chapter except for the provisions in paragraphs (d)(5) (ii) and (iii) of § 798.5450, unless both the *in vitro* and *in vivo* cytogenetics tests conducted pursuant to paragraphs (c)(6)(i) (A) and (B) of this section are negative.

(*2*) For the purposes of this section, the following provisions also apply:

(*i*) *Dose levels*. Normally, three dose levels shall be used. The highest dose shall produce signs of toxicity (e.g., slightly reduced fertility and slightly reduced body weight). The highest dose should not exceed the lower explosive limit of commercial hexane. However, in an initial assessment of dominant lethality, a single high dose may be sufficient. Nontoxic substances shall be tested at 5 g/kg or, if this is not practicable, then at the highest dose attainable.

(*ii*) *Route of administration*. Animals shall be exposed to commercial hexane by inhalation.

(*iii*) *Treatment schedule*. The duration of exposure shall be for 6 hours per day for 5 consecutive days.

(D)(*1*) A heritable translocation test shall be conducted with commercial hexane in accordance with § 798.5460 of this chapter except for the provisions in paragraphs (d)(5) (ii) and (iii) of § 798.5460, if the results of the dominant lethal assay conducted pursuant to paragraph (c)(6)(i)(C) of this section are positive and if, after a public program review, EPA issues a FEDERAL REGISTER notice or sends a certified letter to the test sponsor specifying that the testing shall be initiated.

(*2*) For the purposes of this section, the following provisions also apply:

(*i*) *Dose levels*. At least two dose levels shall be used. The highest dose level shall result in toxic effects (which shall not produce an incidence of fatalities which would prevent a meaningful evaluation) or shall be the highest dose attainable or 5 g/kg body weight and should not exceed the lower explosive limit of commercial hexane.

(*ii*) *Route of administration*. Animals shall be exposed to commercial hexane by inhalation.

(*iii*) *Reporting requirements*. (A) The chromosomal aberration tests shall be completed and the final reports submitted to EPA as follows:

(*1*) The *in vitro* cytogenetics test within 15 months of the effective date of the final rule.

(*2*) The *in vivo* cytogenetics test within 19 months of the effective date of the final rule.

(*3*) The dominant lethal assay within 28 months of the effective date of the final rule.

(*4*) The heritable translocation test within 25 months of the date of EPA's notification of the test sponsor by certified letter or FEDERAL REGISTER notice that testing shall be initiated.

(B) Interim progress reports for each test shall be submitted to EPA for the *in vivo* cytogenetics and the dominant lethal assays at 6-month intervals beginning 6 months after the effective date of the final rule, until the applicable final report is submitted to EPA.

(C) Interim progress reports shall be submitted to EPA for the heritable translocation assay at 6-month intervals beginning 6 months after the date of EPA's notification of the test sponsor that testing shall be initiated, until the final report is submitted to EPA.

(7) *Neutrotoxicity*—(i) *Required testing*. (A)(*1*) A schedule-controlled operant behavior test shall be conducted with commercial hexane in accordance with § 798.6500 of this chapter except for the provisions in paragraphs (d)(5)(i), (6) and (7) of § 798.6500.

(*2*) For the purposes of this section, the following provisions also apply:

(*i*) *High dose level*. The highest dose shall produce clear behavioral effects or life-threatening toxicity. In addition, the highest dose should not exceed the lower explosive limit of commercial hexane.

(*ii*) *Duration and frequency of exposure*. Animals shall be dosed once for 4 to 6 hours.

(*iii*) *Route of administration*. Animals shall be exposed to commercial hexane by inhalation.

(B)(*1*) A functional observation battery shall be conducted with commercial hexane in accordance with § 798.6050 of this chapter except for the provisions in paragraphs (d)(4)(i), (5), and (6) of § 798.6050.

(*2*) For the purposes of this section, the following provisions also apply:

(*i*) *High dose level*. The highest dose shall produce clear behavioral effects or life-threatening toxicity. In addition, the highest dose should not exceed the lower explosive limit of commercial hexane.

(*ii*) *Duration and frequency of exposure*. Animals shall be dosed for 6 hours/day, 5 days/week for 90 days.

(*iii*) *Route of exposure*. Animals shall be exposed to commercial hexane by inhalation.

(C)(*1*) A motor activity test shall be conducted with commercial hexane in accordance with § 798.6200 of this chapter except for the provisions in paragraphs (d)(4)(i), (5), and (6) of § 798.6200.

(*2*) For the purposes of this section, the following provisions also apply:

(*i*) *High dose level*. The highest dose shall produce clear effects on motor activity of life-threatening toxicity. In addition, the highest dose should not

exceed the lower explosive limit of commercial hexane.

(*ii*) *Duration and frequency of exposure*. Animals shall be dosed for 6 hours/day, 5 days/week for 90 days.

(*iii*) *Route of exposure*. Animals shall be exposed to commercial hexane by inhalation.

(D)(*1*) A neuropathology test shall be conducted with commercial hexane in accordance with § 798.6400 of this chapter except for the provisions in paragraphs (d)(4)(i), (5), and (6) of § 798.6400.

(*2*) For the purposes of this section, the following provisions also apply:

(*i*) *High dose level*. The highest dose shall produce clear behavior effects or life-threatening toxicity. In addition, the highest dose should not exceed the lower explosive limit of commercial hexane.

(*ii*) *Duration and frequency of exposure*. Animals shall be dosed for 6 hours/day, 5 days/week for 90 days.

(*iii*) *Route of exposure*. Animals shall be exposed to commercial hexane by inhalation.

(ii) *Reporting requirements*. (A) The schedule-controlled operant behavior, functional observation battery, motor activity, and neuropathology tests shall be completed and the final reports submitted to EPA within 15 months of the effective date of the final rule.

(B) Interim progress reports for each test shall be submitted to EPA for the schedule-controlled operant behavior, functional observation battery, motor activity, and neuropathology tests at 6-month intervals beginning 6 months after the effective date of the applicable final rule, until the applicable final report is submitted to EPA.

(8) *Pharmacokinetics*—(i) *Required testing*. (A) Pharmacokinetics testing shall be conducted in rats in accordance with § 795.232 of this chapter, except for paragraph (c)(1)(ii) of § 795.232.

(B) For the purposes of this section, the following provisions also apply:

(*1*) *Test animals*. Adult male and female rats shall be used for testing. The rats shall be 9 to 11 weeks old and their weight range should be comparable from group to group. The animals shall be purchased from a reputable dealer and shall be permanently identified upon arrival. The animals shall be selected at random for the testing groups, and any animal showing signs of ill health shall not be used.

(*2*) *Species and strain*. The rat strain used shall be the same as the strain used in the subchronic and chronic tests required under §§ 798.2450(d)(1)(i) and 798.3300(b)(1)(i).

(ii) *Reporting requirements*. (A) The inhalation and dermal pharmacokinetics tests shall be completed and the final report submitted to EPA by August 21, 1992.

(B) Interim progress reports shall be submitted to EPA for the inhalation and dermal pharmacokinetics tests at 6-month intervals, beginning 6 months after the effective date specified in paragraph (d)(1) of this section, until the final report is submitted to EPA.

(d) *Effective date*. (1) The effective date of this final rule is November 17, 1988, except for the provisions of paragraphs (c)(2)(ii)(A), (c)(5)(i)(D), (c)(5)(ii)(A)(4), (c)(5)(ii)(C), (c)(8)(i) and (c)(8)(ii)(A) of this section. The effective date for paragraphs (c)(5)(i)(D), (c)(5)(ii)(A)(4) and (c)(5)(ii)(C) of this section is May 21, 1990. The effective date for paragraphs (c)(8)(i) and (c)(8)(ii)(A) of this section is June 12, 1992. The effective date of paragraph (c)(2)(ii)(A) is September 8, 1994.

(2) The guidelines and other test methods cited in this rule are referenced as they exist on the effective date of the final rule.

[53 FR 3392, Feb. 5, 1988, as amended at 53 FR 38953, Oct. 4, 1988; 55 FR 634, Jan. 8, 1990; 55 FR 7325, Mar. 1, 1990; 55 FR 12643, Apr. 5, 1990; 57 FR 24961, June 12, 1992; 58 FR 34205, June 23, 1993; 59 FR 46357, Sept. 8, 1994; 60 FR 34467, July 3, 1995; 69 FR 18803, Apr. 9, 2004; 77 FR 46293, Aug. 3, 2012]

§ 799.2325 Isopropanol.

(a) *Identification of test substance*. (1) Isopropanol (CAS No. 67–63–0) shall be tested in accordance with this section.

(2) Isopropanol of at least 99.8 percent purity shall be used as the test substance.

(b) *Persons required to submit study plans, conduct tests, and submit data*. All persons who manufacture (including import or byproduct manufacture) or intend to manufacture or process isopropanol, from the effective date of

this rule to the end of the reimbursement period, shall submit letters of intent to conduct testing, submit study plans, conduct tests, and submit data or submit exemption applications as specified in this section, subpart A of this part, and parts 790 and 792 of this chapter for single-phase rulemaking.

(c) *Health effects testing*—(1) *Subchronic inhalation toxicity*—(i) *Required testing*. A subchronic inhalation toxicity test shall be conducted with isopropanol in accordance with § 798.2450 of this chapter.

(ii) *Reporting requirements*. (A) The subchronic inhalation toxicity test shall be completed and the final report submitted to EPA within 15 months of the date specified in paragraph (d) of this section.

(B) Progress reports shall be submitted to EPA for the subchronic inhalation toxicity test at 6-month intervals beginning 6 months after the date specified in paragraph (d)(1) of this section until submission of the final report.

(2) *Reproduction and fertility effects*—(i) *Required testing*. A reproduction and fertility effects test shall be conducted by gavage with isopropanol in accordance with § 798.4700 of this chapter.

(ii) *Reporting requirements*. (A) The reproduction and fertility effects test shall be completed and the final report submitted to EPA within 29 months of the date specified in paragraph (d)(1) of this section.

(B) Progress reports shall be submitted at 6-month intervals beginning 6 months after the date specified in paragraph (d)(1) of this section until submission of the final report.

(3) *Developmental toxicity*—(i) *Required testing*. A developmental toxicity test shall be conducted in two mammalian species by gavage with isopropanol in accordance with § 798.4900 of this chapter.

(ii) *Reporting requirements*. (A) The developmental toxicity test shall be completed and the final report submitted to EPA within 12 months of the date specified in paragraph (d)(1) of this section.

(B) A progress report shall be submitted 6 months after the date specified in paragraph (d)(1) of this section.

(4) *Mutagenic effects—gene mutations*—(i) *Required testing*. (A) A gene mutation test in mammalian cells shall be conducted with isopropanol in accordance with § 798.5300 of this chapter.

(B)(*1*) A sex-linked recessive lethal test in *Drosophila melanogaster* shall be conducted with isopropanol in accordance with § 798.5275 of this chapter, except for the provisions in paragraphs (d)(5)(ii) and (iii) of § 798.5275, unless the results of the mammalian cells in the culture gene mutation test conducted pursuant to paragraph (c)(5)(i)(A) of this section are negative.

(*2*) For the purpose of this section, the following provisions also apply:

(*i*) *Route of administration*. The route of administration shall be by exposure to isopropanol vapors or by injection of isopropanol.

(*ii*) [Reserved]

(C)(*1*) The mouse visible specific locus (MVSL) test shall be conducted with isopropanol by inhalation in accordance with § 798.5200, except for the provisions in paragraphs (d)(5)(ii) and (iii) of § 798.5200, if the results of the sex-linked recessive lethal test conducted pursuant to paragraph (c)(4)(i)(B) of this section are positive and if, after a public program review, EPA issues a FEDERAL REGISTER notice or sends a certified letter to the test sponsor specifying that the testing shall be initiated.

(*2*) For the purpose of this section, the following provisions also apply:

(*i*) *Dose levels and duration of exposure*. A minimum of 2 dose levels shall be tested. The duration of exposure shall be for 6 hours per day. Duration of exposure shall be dependent upon accumulated total dose desired for each group.

(*ii*) *Route of administration*. Animals shall be exposed to isopropanol by inhalation.

(ii) *Reporting requirements*. (A) The gene mutation tests shall be completed and final report submitted to EPA as follows:

(*1*) The gene mutation in mammalian cells assay within 6 months of the date specified in paragraph (d)(1) of this section.

(*2*) The sex-linked recessive-lethal test in *Drosophila melanogaster* within

18 months of the date specified in paragraph (d)(1) of this section.

(*3*) The mouse visible specific-locus test within 51 months of the date of EPA's notification of the test sponsor by certified letter or FEDERAL REGISTER notice under paragraph (c)(4)(i)(C) of this section that testing shall be initiated.

(B) Progress reports shall be submitted to EPA for the *Drosophila* sex-linked recessive lethal test at 6-month intervals beginning 6 months after the date specified in paragraph (d)(1) of this section until the submission of the final report.

(C) Progress reports shall be submitted to EPA for the mouse visible specific locus test at 6-month intervals beginning 6 months after the date of EPA's notification of the test sponsor that testing shall be initiated until submission of the final report.

(5) *Mutagenic effects—chromosomal aberrations*—(i) *Required testing.* (A)(*1*) The micronucleus test shall be conducted with isopropanol in accordance with § 798.5395 of this chapter.

(*2*) For the purpose of this section, the following provisions also apply:

(*i*) *Route of administration.* Animals shall be exposed to isopropanol by either inhalation or oral gavage or inperitoneally (IP).

(*ii*) *Duration of exposure.* For inhalation, the duration of exposure shall be for 6 hours per day for 5 consecutive days with one sacrifice time or for 6 hours for 1 day with three sacrifice times.

(B)(*1*) A dominant lethal assay shall be conducted with isopropanol in accordance with § 798.5450 of this chapter, except for the provisions in paragraphs (d)(5)(ii) and (iii) of § 798.5450, unless the micronucleus test conducted pursuant to paragraphs (c)(5)(i)(A) of this section is negative.

(*2*) For the purpose of this section, the following provisions also apply:

(*i*) *Route of administration.* Animals shall be exposed to isopropanol by inhalation.

(*ii*) *Duration of exposure.* The duration of exposure shall be for 6 hours per day for 5 consecutive days.

(C)(*1*) The mouse visible specific locus test (MVSL) shall be conducted with isopropanol by inhalation in accordance with § 798.5200 of this chapter, except for the provisions in paragraphs (d)(5)(ii) and (d)(5)(iii) of § 798.5200, or a mouse biochemical specific locus test (MBSL) shall be conducted with isopropanol by inhalation in accordance with § 798.5195 of this chapter, except for the provisions in paragraphs (d)(5)(ii) and (d)(5)(iii) of § 798.5195, if the results of the sex-linked recessive lethal test conducted pursuant to paragraph (c)(4)(i)(B) of this section are positive and if, after a public program review, EPA issues a FEDERAL REGISTER notice or sends a certified letter to the test sponsor specifying that the testing shall be initiated.

(*2*) For the purpose of this section, the following provisions also apply:

(*i*) *Route of administration.* Animals shall be exposed to isopropanol by inhalation.

(*ii*) [Reserved]

(ii) *Reporting requirements.* (A) The chromosomal aberration tests shall be completed and the final reports submitted to EPA as follows:

(*1*) The micronucleus test within 15 months of the date specified in paragraph (d)(1) of this section.

(*2*) The dominant lethal assay within 27 months of the date specified in paragraph (d)(1) of this section.

(*3*) The MVSL or MBSL test within 51 months of the date of EPA's notification of the test sponsor by certified letter or FEDERAL REGISTER notice under paragraph (c)(4)(i)(C) of this section that testing shall be initiated.

(B) Progress reports shall be submitted to EPA for the micronucleus and the dominant lethal assays at 6-month intervals beginning 6 months after the date specified in paragraph (d)(1) of this section until submission of the final report.

(C) Progress reports shall be submitted to EPA for the heritable translocation assay at 6-month intervals beginning 6 months after the date of EPA's notification of the test sponsor that testing shall be initiated until submission of the final report.

(6) *Neurotoxicity*—(i) *Required testing.* (A)(*1*) A functional observation battery shall be conducted with isopropanol in accordance with § 798.6050 of this chapter except for the provisions in paragraphs (d)(5) and (6) of § 798.6050.

(*2*) For the purpose of this section, the following provisions also apply:

(*i*) *Duration and frequency of exposure.* For subchronic study, animals shall be dosed for 6 hours per day, 5 days per week for 90 days. For acute study, animals shall be dosed for 4 to 6 hours once.

(*ii*) *Route of exposure.* Animals shall be exposed to isopropanol by inhalation.

(B)(*1*) A motor activity test shall be conducted with isopropanol in accordance with § 798.6200 of this chapter except for the provisions in paragraphs (d)(5) and (6) of § 798.6200.

(*2*) For the purpose of this section, the following provisions also apply:

(*i*) *Duration of exposure.* For subchronic study, animals shall be dosed for 6 hours per day, 5 days per week for 90 days. For acute study, animals shall be dosed for 4 to 6 hours once.

(*ii*) *Route of exposure.* Animals shall be exposed to isopropanol by inhalation.

(C)(*1*) A neuropathology test shall be conducted with isopropanol in accordance with § 798.6400 of this chapter except for the provisions in paragraphs (d)(5) and (6) of § 798.6400.

(*2*) For the purpose of this section, the following provisions also apply:

(*i*) *Duration of exposure.* Animals shall be dosed for 6 hours per day, 5 days per week for 90 days.

(*ii*) *Route of exposure.* Animals shall be exposed to isopropanol by inhalation.

(D) The developmental neurotoxicity test shall be conducted with isopropanol in accordance with § 795.250 of this chapter, except for paragraph (c)(1)(iv).

(*1*) For purposes of this section, the following provisions also apply:

(*i*) *Numbers of animals.* The objective is for a sufficient number of pregnant rats to be exposed to ensure that an adequate number of offspring are produced for neurotoxicity evaluation. At least 24 litters shall be used at each dose level.

(*ii*) [Reserved]

(*2*) [Reserved]

(ii) *Reporting requirements.* (A) The acute functional observation battery and motor activity tests shall be completed and the final report submitted to EPA within 15 months of the date specified in paragraph (d)(1) of this section. The subchronic functional observation battery, motor activity, and neuropathology tests shall be completed and the final reports submitted to EPA within 18 months of the date specified in paragraph (d)(1) of this section. The developmental neurotoxicity test shall be completed and the final report submitted to EPA within 21 months of the date specified in paragraph (d)(1) of this section.

(B) Progress reports shall be submitted to EPA for the functional observation battery, motor activity, neuropathology, and developmental neurotoxicity tests at 6-month intervals beginning 6 months after the date specified in paragraph (d)(1) of this section until submission of the applicable final report.

(7) *Pharmacokinetics studies*—(i) *Required testing.* An oral and inhalation pharmacokinetics test shall be conducted with isopropanol in accordance with § 795.231 of this chapter.

(ii) *Reporting requirements.* (A) The pharmacokinetic test shall be completed and the final report submitted to EPA within 15 months of the date specified in paragraph (d)(1) of this section.

(B) Progress reports shall be submitted to EPA for the pharmacokinetics test at 6-month intervals beginning 6 months after the date specified in paragraph (d)(1) of this section until submission of the final report.

(8) *Oncogenicity*—(i) *Required testing.* An oncogenicity test shall be conducted by inhalation with isopropanol in accordance with § 798.3300 of this chapter.

(ii) *Reporting requirements.* (A) The oncogenicity test shall be completed and the final report submitted to EPA by July 5, 1994.

(B) Progress reports shall be submitted at 6-month intervals beginning 6 months after the date specified in paragraph (d)(1) of this section until submission of the final report.

(d) *Effective date.* (1) The effective date of this final rule is December 4, 1989, except for the provisions of paragraphs (c)(5)(i)(C)(*1*), (c)(5)(ii)(A)(*3*), (c)(6)(i)(D), and (c)(8)(ii)(A), of this section. The effective date for paragraphs

(c)(5)(i)(C)(*1*), and (c)(5)(ii)(A)(*3*) of this section is May 21, 1990. The effective date for paragraphs (c)(6)(i)(D) of this section is May 21, 1991. The effective date of paragraph (c)(8)(ii)(A) is September 29, 1995.

(2) The guidelines and other test methods cited in this rule are references as they exist on the effective date of the final rule.

[54 FR 43262, Oct. 23, 1989, as amended at 55 FR 12644, Apr. 5, 1990; 56 FR 23231, May 21, 1990; 58 FR 34205, June 23, 1993; 60 FR 56956, Nov. 13, 1995]

§ 799.2475 2-Mercaptobenzothiazole.

(a) *Identification of test substance.* (1) 2-Mercaptobenzothiazole (MBT, CAS No. 149–30–4) shall be tested in accordance with this section.

(2) MBT of at least 97.6 percent purity (plus or minus 1.5 percent) shall be used as the test substance.

(b) *Persons required to submit study plans, conduct tests, and submit data.* All persons who manufacture (including byproduct manufacture, and import of MBT and MBT-containing articles) or process or intend to manufacture or process MBT, other than as an impurity, after October 21, 1988, to the end of the reimbursement period shall submit letters of intent to conduct testing, submit study plans, conduct tests, and submit data, or submit exemption applications as specified in this section, subpart A of this part, and parts 790 and 792 of this chapter for single-phase rulemaking.

(c) *Chemical fate*—(1) *Aerobic aquatic biodegradation*—(i) *Required testing.* Aerobic aquatic biodegradation testing shall be conducted with MBT in accordance with § 796.3100 of this chapter.

(ii) *Reporting requirements.* (A) The aerobic aquatic biodegradation test shall be completed and the final report submitted to EPA within 12 months of the effective date of the final rule.

(B) An interim progress report shall be submitted to EPA 6 months after the effective date of the final rule.

(2) *Indirect photolysis-screening level test*—(i) *Required testing.* Indirect photolysis testing shall be conducted with MBT in accordance with § 795.70 of this chapter.

(ii) *Reporting requirements.* (A) The indirect photolysis test shall be completed and the final report submitted to EPA within 12 months of the effective date of the final rule.

(B) An interim progress report shall be submitted to EPA 6 months after the effective date of the final rule.

(3) *Chemical mobility*—(i) *Required testing.* Chemical mobility testing shall be conducted with MBT in accordance with § 796.2750 of this chapter.

(ii) *Reporting requirements.* (A) The chemical mobility test shall be completed and the final report submitted to EPA within 12 months of the effective date of the final rule.

(B) An interim progress report shall be submitted to EPA 6 months after the effective date of this final rule.

(d) *Environmental effects*—(1) *Fish chronic toxicity*—(i) *Required testing.* (A) Chronic toxicity testing of MBT shall be conducted using rainbow trout (*Salmo gairdneri.*) according to § 797.1600 of this chapter, except for paragraphs (c)(4)(iv)(A), (c)(4)(x)(E) and (c)(4)(x)(F), (c)(6)(iv)(A), (d)(2)(vii)(A)(*2*), and (d)(3)(iv) of § 797.1600.

(B) For the purpose of this section, the following provisions also apply:

(*1*) The first feeding for the fathead and sheepshead minnow fry shall begin shortly after transfer of the fry from the embryo cups to the test chambers. Silversides are fed the first day after hatch. Trout species initiate feeding at swim-up. The trout fry shall be fed trout starter mash or live newly-hatched brine shrimp nauplii (*Artemia salina*) three times a day *ad libitum*, with excess food siphoned off daily. The minnow fry shall be fed live newly-hatched brine shrimp nauplii (*Artemia salina*) at least three times a day.

(*2*) All physical abnormalities (e.g., stunted bodies, scoliosis, etc.) shall be photographed and preserved.

(*3*) At termination, all surviving fish shall be measured for growth. Total length measurements should be used except in cases where fin erosion occurs, then the use of standard length measurements shall be permitted. Standard length measurements should be made directly with a caliper, but may be measured photographically. Measurements shall be made to the nearest millimeter (0.1 mm is desirable). Weight measurements shall also

be made for each fish alive at termination (wet, blotted dry, and to the nearest 0.01 g for the minnows and 0.1 g for the trout). If the fish exposed to the toxicant appear to be edematous compared to control fish, determination of dry, rather than wet, weight is recommended.

(*4*)(*i*) *Test substance measurement.* Prior to addition of the test substance to the dilution water, it is recommended that the test substance stock solution be analyzed to verify the concentration. After addition of the test substance, the concentration of test substance shall be measured in the test substance delivery chamber prior to beginning, and during, the test. The concentration of test substance should also be measured at the beginning of the test in each test concentration (including both replicates) and control(s), and at least once a week thereafter. Equal aliquots of test solution may be removed from each replicate chamber and pooled for analysis. If a malfunction in the delivery system is discovered, water samples shall be taken from the affected test chambers immediately and analyzed.

(*ii*) *pH.* It is recommended that a pH of 7 be maintained in the test chambers.

(*iii*) *Reporting.* An analysis of the stability of the stock solution for the duration of the test shall be reported.

(*5*) [Reserved]

(*6*) For brook and rainbow trout, a 16–hour light and 8–hour dark photoperiod shall be provided.

(ii) *Reporting requirements.* (A) The fish chronic toxicity test shall be completed and the final report submitted to EPA within 12 months of the effective date of the final rule.

(B) An interim progress report shall be submitted to EPA 6 months after the effective date of the final rule.

(2) *Daphnid chronic toxicity*—(i) *Required testing.* (A) Daphnid chronic toxicity testing shall be conducted with MBT using *Daphnia magna* according to § 797.1330 of this chapter.

(B) For the purposes of this section, the following provisions also apply:

(*1*) *Test substance measurement.* Test substance concentration shall be measured in the test substance delivery chamber prior to beginning, and during, the test.

(*2*) *pH.* It is recommended that a pH of 7 be maintained in the test chambers.

(*3*) *Reporting.* An analysis of the stability of the stock solution for the duration of the test shall be reported and data comparing trout starter mash with *A. salina* for supporting trout growth should be submitted with the final report.

(ii) *Reporting requirements.* (A) The daphnid chronic toxicity test shall be completed and the final report submitted to EPA within 12 months of the effective date of the final rule.

(B) An interim progress report shall be submitted to EPA 6 months after the effective date of the final rule.

(e) *Health effects*—(1) *Developmental toxicity testing*—(i) *Required testing.* Developmental toxicity testing shall be conducted in two mammalian species with MBT in accordance with § 798.4900 of this chapter, using the oral route of administration.

(ii) *Reporting requirements.* (A) The developmental toxicity test shall be completed and the final report submitted to EPA within 12 months of the effective date of the final rule.

(B) An interim progress report shall be submitted to EPA 6 months after the effective date of the final rule.

(2) *Reproductive toxicity*—(i) *Required testing.* Reproductive toxicity testing shall be conducted with MBT in accordance with § 798.4700 of this chapter, using the oral route of administration.

(ii) *Reporting requirements.* (A) The reproductive test shall be completed and the final report submitted to EPA within 29 months of the effective date of the final rule.

(B) Progress reports shall be submitted to EPA at 6-month intervals beginning 6 months after the effective date of the final rule until submission of the final report.

(3) *Neurotoxicity*—(i) *Required testing.* (A)(*1*) An acute and subchronic functional observation battery shall be conducted with MBT in accordance with § 798.6050 of this chapter except for the provisions in paragraphs (d)(5) and (6) of § 798.6050.

(*2*) For the purpose of this section, the following provisions also apply:

(*i*) *Duration and frequency of exposure*. For acute study, animals shall be administered MBT over a period not to exceed 24 hours. For subchronic study, animals shall be dosed daily for at least 90 days.

(*ii*) *Route of exposure*. Animals shall be exposed to MBT orally.

(B)(*1*) An acute and subchronic motor activity test shall be conducted with MBT in accordance with § 798.6200 of this chapter except for the provisions in paragraphs (d)(5) and (6) of § 798.6200.

(*2*) For the purpose of this section the following provisions also apply:

(*i*) *Duration and frequency of exposure*. For acute study, animals shall be administered over a period not to exceed 24 hours. For subchronic study, animals shall be dosed daily for at least 90 days.

(*ii*) *Route of exposure*. Animals shall be exposed to MBT orally.

(C)(*1*) A subchronic neuropathology test shall be conducted with MBT in accordance with § 798.6400 of this chapter except for the provisions in paragraphs (d)(5) and (6) of § 798.6400.

(*2*) For the purpose of this section, the following provisions also apply:

(*i*) *Duration and frequency of exposure*. Animals shall be dosed daily for at least 90 days.

(*ii*) *Route of exposure*. Animals shall be exposed to MBT orally.

(ii) *Reporting requirements*. (A) The functional observation battery, motor activity, and neuropathology tests shall be completed and the final reports for each test submitted to EPA within 18 months of the effective date of the final rule.

(B) A progress report shall be submitted to EPA for the functional observation battery, motor activity, and neuropathology tests, respectively, 6 months after the effective date of the final rule.

(4) *Mutagenic effects—Chromosomal aberrations*—(i) *Required testing*. (A) A dominant lethal assay shall be conducted with MBT in accordance with § 798.5450 of this chapter, using the oral route of administration.

(B) A heritable translocation assay shall be conducted with MBT in accordance with the test guideline specified in § 798.5460 of this chapter if MBT produces a positive result in the dominant lethal assay conducted pursuant to paragraph (e)(4)(i)(A) of this section and if, after a public program review, EPA issues a FEDERAL REGISTER notice or sends a certified letter to the test sponsor specifying that the testing shall be initiated.

(ii) *Reporting requirements*. (A) Mutagenic effects—Chromosomal aberration testing of MBT shall be completed and the final report submitted to EPA as follows: Dominant lethal assay, within 12 months after the effective date of this rule; heritable translocation assay, within 24 months after notification under paragraph (e)(4)(i)(B) of this section that the testing shall be initiated.

(B) For the dominant lethal assay, an interim progress report shall be submitted to EPA 6 months after the effective date of the final rule; for the heritable translocation assay, progress reports shall be submitted to EPA at 6-month intervals beginning 6 months after the date of EPA's notification of the test sponsor that testing shall be initiated until submission of the final report.

(f) *Effective date*. (1) The effective date of this final rule is October 21, 1988, except for paragraphs (a)(2), (d)(1)(i), (d)(2)(i)(B)(*3*), and (e)(3)(ii)(A) of this section. The effective date for paragraphs (a)(2), (d)(1)(i), (d)(2)(i)(B)(*3*), and (e)(3)(ii)(A) of this section is March 1, 1990.

(2) The guidelines and other test methods cited in this rule are referenced as they exist on the effective date of the final rule.

[53 FR 34530, Sept. 7, 1988; 53 FR 37393, Sept. 26, 1988, as amended at 55 FR 7326, Mar. 1, 1990; 58 FR 34205, June 23, 1993]

§ 799.2700 Methyl ethyl ketoxime.

(a) *Identification of test substance*. (1) Methyl ethyl ketoxime (MEKO, CAS No. 96–29–7) shall be tested in accordance with this section.

(2) MEKO of at least 99 percent purity shall be used as the test substance.

(b) *Persons required to submit study plans, conduct tests, and submit data*. All persons who manufacture (including import) or process or intend to manufacture or process MEKO, including persons who manufacture or process or intend to manufacture or process

MEKO as a byproduct, or who import or intend to import products which contain MEKO, after the date specified in paragraph (e) of this section to the end of the reimbursement period, shall submit letters of intent to conduct testing, submit study plans, conduct tests and submit data, or submit exemption applications, as specified in this section, subpart A of this part, and parts 790 and 792 of this chapter for single-phase rulemaking. Persons who manufacture, import, or process MEKO only as an impurity are not subject to these requirements.

(c) *Health effects testing*—(1) *Pharmacokinetics testing*—(i) *Required testing*. Pharmacokinetics testing shall be conducted with MEKO in accordance with paragraph (c)(1)(ii) of this section.

(ii) [Reserved]

(2) *Oncogenicity*—(i) *Required testing*. Oncogenicity testing shall be conducted in accordance with § 798.3300 of this chapter.

(ii) *Route of administration*. MEKO shall be administered either orally or by inhalation.

(iii) *Reporting requirements*. (A) Oncogenicity testing shall be completed and a final report submitted to EPA within 53 months of the date specified in paragraph (e) of this section.

(B) Interim progress reports shall be submitted to EPA at 6-month intervals, beginning 6 months after the date specified in paragraph (e) of this section, until submission of the final report to EPA.

(3) *Developmental toxicity*—(i) *Required testing*. Developmental toxicity testing shall be conducted in a rodent and a nonrodent mammalian species in accordance with § 798.4900 of this chapter.

(ii) *Route of administration*. MEKO shall be administered orally.

(iii) *Reporting requirements*. (A) Developmental toxicity testing shall be completed and a final report submitted to EPA within 15 months of the date specified in paragraph (e) of this section.

(B) Interim progress reports shall be submitted to EPA at 6-month intervals, beginning 6 months after the date specified in paragraph (e) of this section.

(4) *Reproductive toxicity*—(i) *Required testing*. (A) Reproductive toxicity testing shall be conducted orally in accordance with § 798.4700 of this chapter except for the provisions in paragraphs (c) (8)(iii) and (9)(i) of § 798.4700.

(B) For the purpose of this section, the following provisions also apply:

(*1*) The following organs and tissues, or representative samples thereof, shall be preserved in a suitable medium for possible future histopathological examination: Vagina, uterus, oviducts, ovaries, testes, epididymides, vas deferens, seminal vesicles, prostate, pituitary gland, and, target organ(s) of all P and F_1 animals selected for mating.

(*2*)(*i*) Full histopathology shall be conducted on the organs and tissues listed in paragraph (c)(4)(i)(B)(*1*) of this section for all high dose and control P and F_1 animals selected for mating.

(*ii*) The integrity of the various cell stages of spermatogenesis shall be determined, with particular attention directed toward achieving optimal quality in the fixation and embedding. Preparations of testicular and associated reproductive organ samples for histology should follow the recommendations of Lamb and Chapin (1985) under paragraph (d)(1) of this section, or an equivalent procedure. Histopathology of the testes shall be conducted on all P and F_1 adult males at the time of sacrifice, and histological analyses shall include evaluations of the spermatogenic cycle, i.e., the presence and integrity of the 14 cell stages. These evaluations should follow the guidance provided by Clermont and Percy (1957) under paragraph (d)(2) of this section. Information shall also be provided regarding the nature and level of lesions observed in control animals for comparative purposes.

(*iii*) Data on female cyclicity shall be obtained by conducting vaginal cytology in P and F_1 females over the last 3 weeks prior to mating; the cell staging technique of Sadleir (1978) and the vaginal smear method in Hafez (1978) under paragraphs (d)(3) and (d)(7) of this section, respectively, or equivalent methods should be used. Data shall be provided on whether the animal is cycling and the cycle length.

(*iv*) P and F_1 females shall continue to be exposed to MEKO for at least an additional 2 weeks following weaning of offspring to permit them to begin cycling once again. They shall then be

sacrificed and their ovaries shall be serially sectioned with a sufficient number of sections examined to adequately detail oocyte and follicular morphology. The methods of Mattison and Thorgiersson (1979) and Pederson and Peters (1968) under paragraphs (d) (4) and (5) of this section, respectively, may provide guidance. The strategy for sectioning and evaluation is left to the discretion of the investigators, but shall be described in detail in the study plan and final report. The nature and background level of lesions in control tissue shall also be noted.

(*v*) Gross and histopathologic evaluations shall be conducted on the mammary glands in F_1 females and F_2 pups sacrificed at weaning and in adult F_1 females at the termination of the study. Any abnormalities shall be described in the final report.

(ii) *Reporting requirements.* (A) Reproductive toxicity testing shall be completed and a final report submitted to EPA within 29 months of the date specified in paragraph (e) of this section.

(B) Interim progress reports shall be submitted to EPA at 6-month intervals, beginning six months after the date specified in paragraph (e) of this section until submission of the final report to EPA.

(5) *Mutagenic effects—gene mutations*—(i) *Required testing.* The sex-linked recessive lethal assay in *Drosophila* shall be conducted with MEKO in accordance with § 798.5275 of this chapter.

(ii) *Reporting requirements.* (A) The sex-linked recessive lethal assay in *Drosophila* shall be completed and a final report submitted to EPA within 18 months of the date specified in paragraph (e) of this section.

(B) Interim progress reports shall be submitted to EPA at 6-month intervals beginning 6 months after the date specified in paragraph (e) of this section.

(6) *Mutagenic effects—chromosomal aberrations*—(i) *Required testing.* (A) An in vivo mammalian bone marrow cytogenetics test shall be conducted with MEKO in accordance with either § 798.5385 (chromosomal analysis) of this chapter, or § 798.5395 (micronucleus assay) of this chapter except for the provisions in paragraphs (d)(5) (ii), (iii), and (iv) of §§ 798.5385 and 798.5395.

(B) For the purpose of this section, the following provisions also apply if § 798.5385 of this chapter is used in conducting the test:

(*1*) *Dose levels and duration of exposure.* At least three dose levels shall be tested. The highest dose tested shall be the maximum tolerated dose or that dose producing some signs of cytotoxicity (e.g., partial inhibition of mitosis) or shall be the highest dose attainable. Under oral administration, animals shall be exposed once per day for 5 consecutive days. Under administration by inhalation, animals shall be exposed 6 hours per day for 5 consecutive days.

(*2*) *Route of administration.* Animals shall be exposed to MEKO either orally or by inhalation.

(C) For the purpose of this section, the following provisions also apply if § 798.5395 of this chapter is used in conducting the test:

(*1*) *Dose levels and duration of exposure.* At least three-dose levels shall be tested. The highest dose tested shall be the maximum tolerated dose or that dose producing some signs of cytotoxicity (e.g., a change in the ratio of polychromatic to normochromatic erythrocytes) or shall be the highest dose attainable. Under oral administration animals shall be exposed once per day for 5 consecutive days. Under administration by inhalation, animals shall be exposed 6 hours per day for 5 consecutive days.

(*2*) *Route of administration.* Animals shall be exposed to MEKO either orally or by inhalation.

(ii) *Reporting requirements.* (A) The oral in vivo mammalian cytogenetics test shall be completed and a final report submitted to EPA within 14 months of the date specified in paragraph (e) of this section. The inhalation in vivo mammalian cytogenetics test shall be completed and a final report submitted to EPA within 17 months of the date specified in paragraph (e) of this section.

(B) Interim progress reports shall be submitted to EPA at 6-month intervals, beginning 6 months after the date specified in paragraph (e) of this section.

(7) *Neurotoxicity*—(i) *Required testing*—(A) *Functional observational battery.* (*1*)

A functional observational battery shall be conducted with MEKO in accordance with § 798.6050 of this chapter except for the provisions in paragraphs (d) (4)(ii), (5), and (6) of § 798.6050.

(*2*) For the purpose of this section, the following provisions also apply:

(*i*) *Route of exposure*. Animals shall be exposed either orally or by inhalation.

(*ii*) *Lower doses*. The data from the lower doses shall show either graded dose-dependent effects in at least two of all the doses tested, including the highest dose, or no neurotoxic (behavioral) effects at any dose tested.

(*iii*) *Duration and frequency of exposure*. For the oral acute testing, animals shall be exposed once. For the oral subchronic testing, animals shall be exposed once per day 5 days per week for a 90-day period. For the inhalation acute testing, animals shall be exposed for 6 hours for 1 day. For the inhalation subchronic testing, animals shall be exposed 6 hours per day 5 days per week for a 90-day period.

(B) *Motor activity*. (*1*) A motor activity test shall be conducted with MEKO in accordance with § 798.6200 of this chapter except for provisions in paragraphs (d) (4)(ii), (5), and (6) of § 798.6200.

(*2*) For the purpose of this section, the following provisions also apply:

(*i*) *Route of exposure*. Animals shall be exposed either orally or by inhalation.

(*ii*) *Lower doses*. The data from the lower doses shall show either graded dose-dependent effects in at least two of all the doses tested including the highest dose, or no neurotoxic (behavioral) effects at any dose tested.

(*iii*) *Duration and frequency of exposure*. For the acute oral testing, animals shall be exposed once. For the oral subchronic testing, animals shall be exposed once per day 5 days per week for a 90-day period. For the acute inhalation testing, animals shall be exposed for 6 hours for 1 day. For the inhalation subchronic testing, the animals shall be exposed for 6 hours per day 5 days per week for a 90-day period.

(C) *Neuropathology*. (*1*) A neuropathology test shall be conducted with MEKO in accordance with § 798.6400 of this chapter except for the provisions in paragraphs (d) (4)(ii), (5), (6), and (8)(iv)(C) of § 798.6400.

(*2*) For the purpose of this section, the following provisions also apply:

(*i*) *Route of exposure*. Animals shall be exposed either orally or by inhalation.

(*ii*) *Lower doses*. The data from the lower doses shall show either graded dose-dependent effects in at least two of all the doses tested including the highest dose, or no neurotoxic (behavioral) effects at any dose tested.

(*iii*) *Duration and frequency of exposure*. Animals shall be exposed orally once per day 5 days per week for a 90-day period; or if exposed by inhalation, for 6 hours per day 5 days per week for a 90-day period.

(*iv*) *Clearing and embedding*. After dehydration, tissue specimens shall be cleared with xylene and embedded in paraffin or paraplast except for the sural nerve which should be embedded in plastic. Multiple tissue specimens (e.g., brain, cord, ganglia) may be embedded together in one single block for sectioning. All tissue blocks shall be labeled to provide unequivocal identification. A suggested method for plastic embedding is described by Spencer et al. in paragraph (d)(6) of this section.

(ii) *Reporting requirements*. (A) The neurotoxicity tests required under this paragraph (c)(7) and administered orally shall be completed and the final results submitted to EPA within 18 months of the date specified in paragraph (e) of this section. The neurotoxicity tests required under this paragraph (c)(7) and administered by inhalation shall be completed and the final results submitted to EPA within 21 months of the date specified in paragraph (e) of this section.

(B) Interim progress reports shall be submitted to EPA at 6-month intervals beginning 6 months after the date specified in paragraph (e) of this section until submission of the final report to EPA.

(d) *References*. For additional background information, the following references should be consulted.

(1) Lamb, J. and Chapin, R.E. ''Experimental models of male reproductive toxicology.'' In: ''Endocrine Toxicity.'' Thomas, J.A., Korach, K.S., and McLachlan, J.A., eds. New York, NY: Raven Press. pp. 85–115. (1985).

(2) Clermont, Y. and Percey, B. ''Quantitative study of the cell population of the seminiferous tubules in immature rats.'' ''American Journal of Anatomy.'' 100:241–267. (1957).

(3) Sadleir, R.M.F.S. ''Cycles and seasons.'' In: ''Reproduction in Mammals: I. Germ Cells and Fertilization.'' Austin, R. and Short R.V., eds. New York, NY: Cambridge Press. Chapter 4. (1978).

(4) Mattison, D.R. and Thorgiersson, S.S. ''Ovarian aryl hydrocarbon hydroxylase activity and primordial oocyte toxicity of polycyclic aromatic hydrocarbons in mice.'' ''Cancer Research.'' 39:3471–3475. (1979).

(5) Pederson, T. and Peters, H. ''Proposal for classification of oocytes and follicles in the mouse ovary.'' ''Journal of Reproduction and Fertility.'' 17:555–557. (1968).

(6) Spencer, P.S., Bischoff, M., and Schaumburg, H.H. ''Neuropathological methods for the detection of neurotoxic disease.'' In: ''Experimental and Clinical Neurotoxicology.'' Spencer, P.S. and Schaumburg, H.H., eds. Baltimore, MD: Williams and Wilkins, pp. 743–757 (1980).

(7) Hafez, E.S., ed., ''Reproduction and Breeding Techniques for Laboratory Animals.'' Chapter 10. Philadelphia: Lea and Febiger. (1970).

(e) *Effective dates.* (1) The effective date of this final rule is October 27, 1989.

(2) The guidelines and other test methods cited in this section are referenced here as they exist on October 27, 1989.

[54 FR 37808, Sept. 13, 1989, as amended at 58 FR 34205, June 23, 1993]

§ 799.3300 Unsubstituted phenylenediamines.

(a) *Identification of test substance.* (1) The unsubstituted phenylenediamines (pda's), *para*-phenylenediamine (*p*-pda, CAS No. 106–50–3), or its sulfate salt (*p*-pda.H_2SO_4, CAS No. 1624–57–75), *meta*-phenylenediamine (*m*-pda, CAS No. 108–45–2), or its sulfate salt (*m*-pda.H_2SO_4, CAS No. 54–17–08), and *ortho*-phenylenediamine (*o*-pda, CAS No. 95–54–5) shall be tested in accordance with this section.

(2) *p*-Pda, *m*-pda, and *o*-pda of at least 98 percent purity shall be used as the test substances. Either the hydrochloride or sulfate salt of *m*-pda shall be used as the test substances. Either the hydrochloride or sulfate salt of *m*-pda shall be used as a test substance in the oncogenicity test in paragraph (c)(2) of this section if the free base proves to be unstable under the conditions of this study. Either the hydrochloride or sulfate salt of *o*-pda, *p*-pda, or *m*-pda shall be used as a test substance in the 90-day subchronic neurotoxicity studies in paragraph (c)(3)(B) of this section if the free base proves to be unstable under the conditions of these studies. The salt(s) shall be of at least 98 percent purity.

(b) *Persons required to submit study plans, conduct tests, and submit data.* (1) All persons who manufacture (including import or by-product manufacture) or process *m*-pda or *m*-pda.H_2SO_4, or intend to manufacture or process *m*-pda or *m*-pda.H_2SO_4, after the effective date of this rule to the end of the reimbursement period shall submit letters of intent to test, submit study plans, conduct tests, and submit data, or submit exemption applications as specified in paragraphs (c), (d), and (e) of this section, subpart A of this part, and parts 790 and 792 of this chapter for single-phase rulemaking.

(2) All persons who manufacture (including import or by-product manufacture) or process *p*-pda, or *p*-pda.H_2SO_4, or intend to manufacture or process *p*-pda, or *p*-pda H_2SO_4, after the effective date of this rule to the end of the reimbursement period shall submit letters of intent to test, submit study plans, conduct tests, and submit data, or submit exemption applications as specified in paragraphs (c)(3), (d), and (e) of this section, subpart A of this part and parts 790 and 792 of this chapter for single-phase rulemaking.

(3) All persons who manufacture (including import or by-product manufacture) or process *o*-pda, or intend to manufacture or process *o*-pda after the effective date of this rule to the end of the reimbursement period shall submit letters of intent to test, submit study plans, conduct tests, and submit data, or submit exemption applications as specified in paragraphs (c)(3), (d), and (e) of this section, subpart A of this part, and parts 790 and 792 of this chapter for single-phase rulemaking.

(c) *Health effects testing*—(1) *Mutagenicity testing*—(i) *Required testing.* (A) The sex-linked recessive lethal (SLRL) assay shall be conducted, by injection, in *Drosophila melanogaster* with *m*-pda in accordance with § 798.5275 of this chapter.

(B) If the SLRL assay conducted pursuant to paragraph (c)(1)(i)(A) of this section is positive, either the mouse visible specific locus test (MVSL) or the mouse biochemical specific locus test (MBSL) shall be conducted for *m*-pda by gavage in accordance with §§ 798.5200 or 798.5195 of this chapter, if after public program review, EPA issues a FEDERAL REGISTER notice or sends a certified letter to the test sponsor(s) specifying that testing shall be initiated. The test sponsor shall notify EPA of its choice in writing in its first interim report.

(C) The mouse bone marrow cytogenetics: micronucleus (MBMC) assay shall be conducted on *m*-pda in accordance with § 798.5395 of this chapter.

(D) If the MBMC assay conducted pursuant to paragraph (c)(1)(i)(C) of this section is positive, the dominant lethal assay (DL) in mice shall be conducted on *m*-pda pursuant to § 798.5450 of this chapter.

(E) If the DL conducted pursuant to paragraph (c)(1)(i)(D) of this section is positive, heritable translocation (HT) testing in the mouse on *m*-pda shall be conducted pursuant to § 798.5460 of this chapter, if after a public program review, EPA issues a FEDERAL REGISTER notice or sends a certified letter to the test sponsor(s) specifying that testing shall be initiated.

(ii) *Reporting requirements.* (A) The tests shall be completed and the final reports for the MBMC assay shall be submitted to the EPA no later than January 16, 1991. The final report for the SLRL in *Drosophila melanogaster* shall be submitted no later than April 15, 1991.

(B) If required, the DL test shall be completed and the final report shall be received by EPA no later than 24 months after the effective date of this final rule.

(C) If required, the MVSL or the MBSL shall be completed and the final report shall be received by EPA no later than 51 months after EPA issues a FEDERAL REGISTER Notice or sends a certified letter to the test sponsor(s) identified under paragraph (c)(1)(i)(B) of this section specifying that testing shall be initiated.

(D) If required, the HT test shall be completed and the final report shall be submitted to EPA not later than 36 months after the date on which EPA notifies the test sponsor under paragraph (c)(1)(i)(E) of this section to begin testing.

(E) Interim reports for the SLRL assay and MBMC are required at 6-month intervals beginning 6 months after the effective date of this section. If the DL is triggered, interim reports are required at 6 month intervals beginning with the date of initiation of the study.

(F) Interim reports for the HT and either the MBSL or MVSL are required at 6–month intervals beginning 6 months after the date of notification by EPA that testing shall be initiated, and ending when the final report is submitted.

(2) *Oncogenicity*—(i) *Required testing.* A 2-year dermal oncogenicity bioassay shall be conducted with *m*-pda if, after public program review, EPA issues a FEDERAL REGISTER notice specifying that the testing shall be initiated.

(ii) [Reserved]

(iii) *Reporting requirements.* (A) The final results and final report for the oncogenicity bioassay shall be submitted to EPA no later than 53 months after EPA issues a FEDERAL REGISTER notice or sends a certified letter to the test sponsor under paragraph (c)(2)(i) of this section specifying that the testing shall be initiated.

(B) Interim reports for the oncogenicity study are required at 6-month intervals beginning 6 months after the date of notification by EPA that testing shall be initiated and ending when the final report is submitted.

(3) *Neurotoxicity*—(i) *Required testing.* (A) Acute neurotoxicity testing in the neurotoxicity functional observational battery (FOB) in accordance with § 798.6050 of this chapter, and the motor activity test (MAT) in accordance with § 798.6200 of this chapter, shall be conducted for *o*-, *m*-, and *p*-pda.

The test chemicals shall be administered in a single oral dose. Clinical observations shall be made at a minimum of 1, 4, 24, and 48 hours and at 7 days after dosing.

(B) If neurotoxic effects are observed at 24 hours, or longer, during the testing conducted pursuant to paragraph (c)(3)(i)(A) of this section, then 90-day subchronic neurotoxic FOB and MAT tests shall be conducted in accordance with §§ 798.6050 and 798.6200 of this chapter, respectively, for each isomer showing such effects. At the end of these tests, the animals shall be sacrificed and the nervous tissue preserved and examined as described in the neuropathology test standard, § 798.6400 of this chapter.

(ii) *Reporting requirements*. (A) The acute neurotoxicity tests shall be completed and the final report submitted to EPA no later than September 15, 1990. If triggered, the final report of the subchronic neurotoxicity testing and the neuropathological examination shall be submitted to EPA on the following schedules. If one isomer is triggered, the reporting deadline is July 15, 1990. If two isomers are triggered, the reporting deadline is January 15, 1992. If three isomers are triggered, the reporting deadline is July 15, 1992.

(B) [Reserved]

(d) *Chemical fate testing*—(1) *Indirect photolysis testing*—(i) *Required testing*. Indirect photolysis studies shall be conducted with *p*-, *m*-, and *o*-pda to determine the half-life in water of each of the three unsubstituted pda's in accordance with § 795.70 of this chapter.

(ii) *Reporting requirements*. (A) The final report shall be submitted to EPA no later than 8 months after the effective date of the final rule.

(B) The final report shall include a calculation of the predicted environmental concentration (PEC), 100×PEC, and 1,000×PEC for each isomer. PEC shall be calculated by using results from the indirect photolysis studies and solving the following equations for the appropriate isomer: *o*-pda: PECo = 0.3629 + 1.0468 log t 1/2; *m*-pda: PECm = 0.6830 + 1.9702 log t 1/2; *p*-pda: PECp = 0.0085 + 0.0024 log t 1/2, where PEC is the predicted concentration in ppb and t 1/2 is the half-life for oxidation (i.e., indirect photolysis) expressed in minutes. PEC, 100×PEC, and 1,000×PEC shall be used in the decision logic described in paragraph (e) of this section.

(2) [Reserved]

(e) *Environmental effects testing*—(1) *Acute toxicity* testing—(i) *Required testing*. (A) Flow-through fish acute toxicity tests in the rainbow trout (*Salmo gairdneri*) shall be conducted with *o*-, *m*-, and *p*-pda in accordance with § 797.1400 of this chapter.

(B) Acute flow-through studies on the freshwater invertebrate *Gammarus* shall be conducted with *o*-, *m*-, and *p*-pda in accordance with § 795.120 of this chapter.

(C) If the concentration affecting 50 percent of the population (LC_{50} or EC_{50}) for any study conducted pursuant to paragraphs (e)(1)(i)(A) and (B) of this section is less than or equal to 100×PEC, less than or equal to 1 milligram/liter (mg/L), or less than or equal to 100 mg/L and shows indications of chronicity, chronic toxicity testing shall be conducted pursuant to paragraph (e)(2) of this section. Indications of chronicity shall be the following: for fish or aquatic invertebrates, the ratio of 24 hour/96 hour LC_{50s} is greater than or equal to 2; for gammarids, the ratio of 24 hour/48 hour EC_{50s} is greater than or equal to 2.

(ii) *Reporting requirements*. The final reports for acute toxicity testing shall be submitted as follows:

(A) Testing on the rainbow trout shall be completed and submitted to EPA 9 months after the effective date of the final rule for *o*-pda and *p*-pda. Testing for *m*-pda shall be completed and submitted by January 15, 1991.

(B) The acute toxicity testing in freshwater *Gammarus* shall be completed and submitted no later than January 15, 1991.

(2) *Chronic toxicity testing*—(i) *Required testing*. (A) A fish partial life-cycle flow-through test shall be conducted in the more sensitive fish species, either *Pimephales promelas* or *Salmo gairdneri*, with each isomer, *o*-, *m*-, and *p*-pda, demonstrating an LC_{50}, determined by testing of fish pursuant to paragraph (e)(1)(i)(A) of this section, equal to or less than 100×PEC; or less than 1 mg/L; or less than 100 mg/L with indications of chronicity. Chronicity indicators are defined in paragraph

(e)(1)(i)(C) of this section. Testing shall be conducted in accordance with § 797.1600 of this chapter.

(B) An invertebrate life-cycle flow-through toxicity test shall be conducted in *Daphnia magna* for *o*- and *p*-pda in accordance with § 797.1330 of this chapter.

(ii) *Reporting requirements.* (A) The fish partial life-cycle flow-through test shall be completed and final results shall be submitted to EPA no later than December 1, 1992.

(B) The invertebrate life-cycle flow-through toxicity test shall be completed and the final report submitted to EPA no later than January 15, 1993.

(C) Progress reports shall be submitted at 6 month intervals after the effective date of the final rule.

(f) *Effective dates.* (1) The effective date of this final rule is January 16, 1990, except for paragraphs (c)(1)(i)(B), (c)(1)(ii)(A), (c)(1)(ii)(C), (c)(1)(ii)(F), (c)(3)(ii)(A), (e)(1)(ii), (e)(2)(ii)(A), and (e)(2)(ii)(B) of this section. The effective date for paragraphs (c)(1)(i)(B), (c)(1)(ii)(C), and (c)(1)(ii)(F) of this section is May 21, 1990. The effective date for paragraphs (c)(1)(ii)(A), (c)(3)(ii)(A), and (e)(1)(ii), of this section is May 21, 1991. The effective date for paragraph (e)(2)(ii)(A) is June 12, 1992. The effective date for paragraph (e)(2)(ii)(B) is May 28, 1993.

(2) The guidelines and other test methods cited in this rule are referenced as they exist on the effective date of the final rule.

[54 FR 49294, Nov. 30, 1989, as amended at 55 FR 12644, Apr. 5, 1990; 56 FR 23231, May 21, 1991; 57 FR 24961, June 12, 1992; 58 FR 30992, May 28, 1993; 58 FR 34205, June 23, 1993]

§ 799.4360 Tributyl phosphate.

(a) *Identification of test substance.* (1) Tributyl phosphate (TBP, CAS No. 126–73–8) shall be tested in accordance with this section.

(2) TBP of at least 99 percent purity shall be used as the test substance.

(b) *Persons required to submit study plans, conduct tests, and submit data.* All persons who manufacture (including import and byproduct manufacture) or process or intend to manufacture or process TBP, other than as an impurity, from the effective date of the final rule to the end of the reimbursement period shall submit letters of intent to conduct testing, submit study plans, conduct tests, and submit data, or submit exemption applications as specified in this section, subpart A of this part, and part 790 of this chapter for single-phase rulemaking.

(c) *Health effects testing*—(1) *Neurotoxicity*—(i) *Required testing.* (A)(*1*) An acute and subchronic functional observational battery shall be conducted with TBP in accordance with § 798.6050 of this chapter except for the provisions of paragraphs (d) (5) and (6) of § 798.6050.

(*2*) For the purpose of this section, the following provisions also apply:

(*i*) *Animal selection.* Testing shall be performed in laboratory rats.

(*ii*) *Duration of testing.* For the acute testing, the substance shall be administered over a period not to exceed 24 hours; for the subchronic testing, test species shall be exposed daily for at least 90 days.

(*iii*) *Route of exposure.* Animals shall be exposed to TBP orally.

(B)(*1*) An acute and subchronic motor activity test shall be conducted with TBP in accordance with § 798.6200 of this chapter except for the provisions of paragraphs (d) (5) and (6) of § 798.6200.

(*2*) For the purpose of this section, the following provisions also apply:

(*i*) *Animal selection.* Testing shall be performed in laboratory rats.

(*ii*) *Duration of testing.* For the acute testing, the substance shall be administered over a period not to exceed 24 hours; for the subchronic testing, test species shall be exposed daily for at least 90 days.

(*iii*) *Route of administration.* Animals shall be exposed to TBP orally.

(C)(*1*) A neuropathology test shall be conducted with TBP in accordance with § 798.6400 of this chapter except for the provision of paragraphs (d)(1)(i) (5) and (6) of § 798.6400.

(*2*) For the purpose of this section, the following provisions also apply:

(*i*) *Animal selection.* Testing shall be performed in laboratory rats.

(*ii*) *Duration of testing.* Animals shall be exposed for at least a 90-day period.

(*iii*) *Route of administration.* Animals shall be exposed to TBP orally.

(ii) *Reporting requirements*—(A) The neurotoxicity tests required under

paragraph (c)(1)(i) (A), (B), and (C) of this section shall be completed and final reports submitted to EPA within 18 months of the effective date of the final rule.

(B) An interim progress report for these neurotoxicity tests shall be submitted to EPA 6 months after the effective date of the final rule.

(2) *Developmental toxicity*—(i) *Required testing*. (A) A developmental toxicity study shall be conducted with TBP in accordance with § 798.4900 of this chapter, except for the provisions of paragraph (e)(5) of § 798.4900.

(B) for the purpose of this section, the following provision also applies:

(*1*) *Route of administration*. The animals shall be exposed to TBP by gavage.

(*2*) [Reserved]

(ii) *Reporting requirements*. (A) The developmental toxicity study required under paragraph (c)(2) of this section shall be completed and a final report submitted to EPA by January 27, 1991.

(B) An interim progress report shall be submitted to EPA 6 months after the effective date of the final rule.

(3) *Reproductive and fertility*—(i) *Required testing*. (A) A reproduction and fertility study shall be conducted with TBP in accordance with § 798.4700 of this chapter, except for the provisions of paragraph (c)(5)(i)(A) of § 798.4700.

(B) for the purpose of this section, the following provisions also apply:

(*1*) *Route of administration*. Animals should be exposed to TBP by gavage.

(*2*) [Reserved]

(ii) *Reporting requirements*. (A) The reproduction and fertility effects study required under paragraph (c)(3) of this section shall be completed and a final report submitted to EPA by August 17, 1992.

(B) Interim program reports shall be submitted to EPA at 6 month intervals, beginning 6 months after the effective date of the final rule, until the final report is submitted to EPA.

(4) *Mutagenic effects—Gene mutation*—(i) *Required testing*. (A) A detection of gene mutation in somatic cells in culture test shall be conducted with TBP in accordance with § 798.5300 of this chapter.

(B)(*1*) If TBP produces a positive result in the assay conducted pursuant to paragraph (c)(4)(i)(A) of this section, a sex-linked recessive lethal test in *Drosophila melanogaster* shall be conducted with TBP in accordance with § 798.5275 of this chapter, except for the provisions of paragraph (d)(5)(iii) of § 798.5275.

(*2*) For the purpose of this section, the following provisions also apply:

(*i*) *Route of administration*. Animals shall be exposed to TBP orally.

(*ii*) [Reserved]

(*iii*) *Reporting requirements*. (*A*) The somatic cells in culture assay shall be completed and the final report submitted to EPA, within 10 months after the effective date of the final rule. If required, the *Drosophila* sex-linked recessive lethal assay shall be completed and the final report submitted to EPA within 22 months after the effective date of the final rule.

(*B*) Interim progress reports shall be submitted to EPA at 6 month intervals beginning 6 months after initiation of the sex-linked recessive lethal test in *Drosophila* until the applicable final reports are submitted to EPA.

(5) *Mutagenic effects—Chromosomal aberration*—(i) *Required testing*. (A) An in vitro mammalian cytogenetics test shall be conducted with TBP in accordance with § 798.5375 of this chapter.

(B)(*1*) If TBP produces a negative result in the in vitro cytogenetics test conducted pursuant to paragraph (c)(5)(i)(A) of this section, an in vivo mammalian bone marrow cytogenetics test shall be conducted with TBP in accordance with § 798.5385 of this chapter, except for the provisions of paragraph (d)(5)(iii) of § 798.5385.

(*2*) For the purpose of this section, the following provisions also apply:

(*i*) *Route of administration*. Animals shall be exposed to TBP orally.

(*ii*) [Reserved]

(C)(*1*) If TBP produces a positive result in either the in vitro or the in vivo cytogenetics test conducted pursuant to paragraphs (c)(5)(i) (A) and (B) of this section, a rodent dominant-lethal assay shall be conducted with TBP in accordance with § 798.5450 of this chapter, except for the provisions of paragraph (d)(5)(iii) of § 798.5450.

(*2*) For the purpose of this section, the following provisions also apply:

(*i*) *Route of administration*. Animals shall be exposed orally to TBP.

(*ii*) [Reserved]

(D)(*1*) A rodent heritable trans- location assay shall be conducted with TBP if the dominant-lethal assay conducted for TBP pursuant to paragraph (c)(5)(i)(C) of this section produces a positive result, and if, after a public program review, EPA issues a FEDERAL REGISTER notice or sends a certified letter to the test sponsor specifying that the testing shall be initiated. This test shall be conducted in accordance with § 798.5460 of this chapter except for the provisions of paragraph (d)(5)(iii) of § 798.5460.

(*2*) For the purpose of this section, the following provisions also apply:

(*i*) *Route of administration*. Animals shall be exposed to TBP orally.

(*ii*) [Reserved]

(ii) *Reporting requirements*. (A)(*1*) The in vitro mammalian cytogenetics test shall be completed and the final report submitted to EPA within 10 months after the effective date of the final rule.

(*2*) If required, the in vivo mammalian bone-marrow cytogenetics test shall be completed and the final report submitted to EPA within 24 months after the effective date of the final rule.

(*3*) If required, the dominant lethal assay shall be completed and the final report submitted to EPA within 36 months after the effective date of the final rule.

(*4*) If required, the heritable translocation assay shall be completed and the final report submitted to EPA within 25 months after the date of EPA's notification of the test sponsor under paragraph (c)(5)(i)(D) of this section that testing shall be initiated.

(B) Interim progress reports shall be submitted to EPA at 6 month intervals beginning 6 months after initiation of the rodent dominant lethal assay and the rodent heritable translocation assay respectively, if required, until the applicable final reports are submitted to EPA.

(6) *Oncogenicity*—(i) *Required testing*. (A) An oncogenicity test shall be conducted with TBP in accordance with § 798.3300 of this chapter except for the provisions of paragraphs (b)(1)(i), (b)(6)(i) and (b)(9), of § 798.3300.

(B) For the purpose of this section, the following provisions also apply:

(*1*) *Animal selection*. TBP shall be tested in Sprague-Dawley rats and in mice.

(*2*) *Route of administration*. Animals shall be exposed to TBP orally.

(*3*) *Clinical examinations*. At 12 months, 18 months and during month 24, a blood smear shall be obtained from all animals. A differential blood count shall be performed on blood smears from those animals in the highest dosage group and the controls. If these data, or data from the pathological examination indicate a need, then the 12– and 18–month blood smears from other dose levels shall also be examined. Differential blood counts shall be performed for the next lower group(s) if there is a major discrepancy between the highest group and the controls. If clinical observations suggest a deterioration in health of the animals during the study, a differential blood count of the affected animals shall be performed.

(ii) *Reporting requirements*. (A) The oncogenicity test required under paragraph (c)(6) of this section shall be completed and a final report submitted to EPA within 53 months of the effective date of the final rule.

(B) Interim progress reports shall be submitted to EPA at 6 month intervals beginning 6 months after the effective date of the final rule, until the final report is submitted to EPA.

(7) *Dermal sensitization*—(i) *Required testing*. A dermal sensitization test shall be conducted with TBP in accordance with § 798.4100 for this chapter.

(ii) *Reporting requirements*. The dermal sensitization test shall be completed and the final report submitted to EPA within 6 months of the effective date of the final rule.

(8) *Oral/Dermal Pharmacokinetics*—(i) *Required testing*. (A) A pharmaco- kinetics test shall be conducted with TBP in accordance with § 795.228 of this chapter, except for the provisions of paragraphs (c)(1)(iii)(B), (c)(2)(ii)(C)(*1*) and (c)(2)(ii)(C)(*2*) of § 795.228.

(B) For the purposes of this section, the following provisions also apply:

(*1*) *Animal care*. During the acclimatization period, the animals shall be

housed in suitable cages. All animals shall be provided with certified feed and tap water *ad libitum*.

(*2*) *Dermal treatment*. For dermal treatment, two doses, comparable to the low and high oral doses, shall be dissolved in a suitable vehicle and applied in volumes adequate to deliver comparable doses. The backs of the animals should be lightly clipped with an electric clipper 24 hours before treatment. The test substance shall be applied to the intact clipped skin (approximately 2 cm^2 for rats, 40 cm^2 for mini-pigs). The dosed areas shall be protected with a suitable porous covering which is secured in place, and the animals shall be housed separately.

(ii) *Reporting requirements*. (A) The pharmacokinetics test required in paragraph (c)(8)(i) of this section shall be completed and the final report submitted to EPA by December 26, 1992.

(B) Interim 6 month progress reports shall be submitted to EPA beginning at 6 months after the effective date of the final rule and continuing until submission of the final report.

(d) *Environmental effects testing*—(1) *Algal acute toxicity*—(i) *Required testing*. (A) Algal acute toxicity testing shall be conducted with TBP using *Selenastrum capricornutum* in accordance with § 797.1050 of this chapter except for the provisions of paragraphs (c)(6)(i)(A),(B), and (ii) of § 797.1050.

(B) For the purpose of this section, the following provisions also apply:

(*1*) *Summary of the test*. The algal cells at the end of 24, 48, and 72 hours shall be enumerated.

(*2*) *Chemical measurement*. The final separation of the algal cells from the test solution shall be done using an ultrafiltration (e.g., 0.45 micrometer pore size) technique. The total and dissolved (e.g., filtered) concentrations of the test substance shall be measured in each test chamber and the delivery chamber before the test and in each test chamber at 0 and 96 hours.

(ii) *Reporting requirements*. The algal acute toxicity test required in paragraph (d)(1) of this section shall be completed and the final report submitted to EPA within 9 months of effective date of the final rule.

(2) *Fish acute toxicity*—(i) *Required testing*. (A) Fish acute toxicity testing shall be conducted with TBP using *Salmo gairdneri* (rainbow trout) in accordance with § 797.1400 of this chapter.

(B) For the purpose of this section, the following provisions also apply:

(*1*) *Chemical measurement*. The total and dissolved (e.g., filtered) concentrations of the test substance shall be measured in each test chamber delivery chamber before the test. If the dissolved test substance concentration is greater than 80 percent of total test substance concentration, then only total or dissolved test concentration shall be measured in each chamber at 0, 48, and 96 hours. If the dissolved test substance concentration is less than or equal to 80 percent of total test substance, then total and dissolved test substance concentration shall be measured at 0, 48 and 96 hours.

(*2*) *Test procedures*. The test shall be performed under flow-through conditions.

(ii) *Reporting requirements*. The fish acute toxicity test shall be completed and the final report submitted to EPA within 9 months of the effective date of the final rule.

(3) *Daphnid acute toxicity*—(i) *Required testing*. (A) Daphnid acute toxicity testing shall be conducted with TBP using *Daphnia magna* or *D. pulex* in accordance with § 797.1300 of this chapter.

(B) For the purpose of this section, the following provisions also apply:

(*1*) *Chemical measurement*. The total and dissolved (e.g., filtered) concentrations of the test substance shall be measured in each test chamber and the delivery chamber before the test. If the dissolved test substance concentration is greater than 80 percent of total test substance concentration, then only total or dissolved test concentration shall be measured in each chamber at 0, 24, and 48 hours. If the dissolved test substance concentration is less than or equal to 80 percent of total test substance, then total and dissolved test substance concentration shall be measured at 0, 29, and 48 hours.

(*2*) *Test procedures*. The test shall be performed under flow-through conditions.

(ii) *Reporting requirements*. The daphnid acute toxicity test shall be

completed and the final report submitted to EPA within 9 months of the effective date of the final rule.

(4) *Gammarid acute toxicity*—(i) *Required testing.* (A) *Gammarid* acute toxicity testing shall be conducted with TBP using *Gammarus lacustris, G. fasciatus,* or *G. pseudolimnaeus* in accordance with § 795.120 of this chapter.

(B) For the purpose of this section, the following provisons also apply:

(*1*) *Chemical measurement.* The total and dissolved (e.g., filtered) concentrations of the test substance shall be measured in each test chamber and the delivery chamber before the test. If the dissolved test substance concentration is greater than 80 percent of total test substance concentration, then only total or dissolved test concentration shall be measured in each chamber at 0, 48, and 96 hours. If the dissolved test substance concentration is less than or equal to 80 percent of total test substance, then total and dissolved test substance concentration shall be measured at 0, 48, and 96 hours.

(*2*) *Test procedures.* The test shall be performed under flow-through conditions.

(ii) *Reporting requirements.* The *Gammarid* acute toxicity test shall be completed and the final report submitted to EPA within 9 months of the effective date of the final rule.

(5) *Daphnid chronic toxicity*—(i) *Required testing.* (A) Daphnid chronic toxicity testing shall be conducted with TBP using *Daphnia magna* or *D. pulex* in accordance with § 797.1330 of this chapter, if the algal EC50, the rainbow trout LC50, the daphnid EC50, or the gammarid LC50 determined in accordance with paragraphs (d)(1), (2), (3) and (4) of this section satisfy the following criteria: Any such value is ≤1 mg/L; or any fish or aquatic invertebrate EC50 or LC50 is ≤100 mg/L and either the rainbow trout or gammarid 24-hour to 96-hour LC50 ratio ≥2, or the daphnid 24-hour to 48-hour EC50 or LC50 ratio is ≥2.

(B) For the purpose of this section, the following provisions also apply:

(*1*) *Chemical measurement.* The total and dissolved (e.g., filtered) concentrations of the test substance shall be measured in each test chamber and the delivery chamber before the test. If the dissolved test substance concentration is greater than 80 percent of total test substance concentration, then only total or dissolved test substance concentration shall be measured in each test chamber at 0, 7, 14, and 21 days. If the dissolved test substance concentration is less than or equal to 80 percent of total test substance concentration, then total and dissovled test substance concentration shall be measured at 0, 7, 14, and 21 days.

(*2*) *Test procedures.* The test shall be performed under flow-through conditions.

(ii) *Reporting requirements.* (A) The daphnid chronic toxicity test, if required, shall be completed and the final report submitted to EPA by September 27, 1991.

(B) An interim progress report shall be submitted to EPA 6 months after the initiation of the test.

(6) *Fish early-life stage toxicity*—(i) *Required testing.* A fish early-life stage toxicity test shall be conducted with TBP in accordance with § 797.1600 of this chapter, using the fish with the lower LC50 value (either the rainbow trout (*Salmo gairdneri*) or the fathead minnow (*Pimephales promelas*)), if the algal EC50, the rainbow trout LC50, the gammarid LC50 or the daphnid EC50 determined in accordance with paragraphs (d)(1), (2), (3), and (4) of this section satisfy the following criteria: Any such value is ≤1 mg/L; or any fish or aquatic invertebrate EC50 or LC50 is ≤100 mg/L and either the rainbow trout or gammarid 24 hour to 96 hour LC50 ratio ≥2, or the daphnid 24-hour to 48-hour EC50 or LC50 ratio is ≥2.

(ii) *Reporting requirements.* (A) The fish early-life stage flow-through toxicity test shall be completed and the final report submitted to EPA by December 27, 1991.

(B) An interim progress report shall be submitted to EPA 6 months after the initiation of the test.

(7) *Benthic sediment invertebrate bioassay*—(i) *Required testing.* (A) A benthic sediment invertebrate bioassay shall be conducted on TBP with the midge (*Chironomus tentans*) if chronic toxicity testing is required pursuant to paragraph (d)(5) of this section and if the log Koc calculated according to paragraph (e)(2)(B)(*1*) of this section is

greater than or equal to 3.5 but less than or equal to 6.5. The total aqueous sediment concentrations and interstitial water concentrations of the test substance shall be measured in each test chamber at 0, 4, 7, 10, and 14 days. The aqueous concentrations of the test substance in the delivery chamber shall be measured at 0, 4, 7, 10, and 14 days. TBP-spiked clean freshwater sediments containing low, medium, and high organic carbon content shall be used.

(B) The benthic sediment invertebrate bioassay shall be conducted according to the test procedure specified in the American Society for Testing and Materials, Special Technical Publication 854 (ASTM STP 854) entitled, ''Aquatic Safety Assessment of Chemicals Sorbed to Sediments,'' by W.J. Adams, R.A. Kimerle, and R.G. Mosher, published in *Aquatic Toxicity and Hazard Assessment: Seventh Symposium*, ASTM STP 854, pp. 429–453, R.D. Caldwell, R. Purdy, and R.C. Bahner, Eds., 1985 which is incorporated by reference. This published procedure is available for public inspection at the National Archives and Records Administration (NARA). For information on the availability of this material at NARA, call 202–741–6030, or go to: *http://www.archives.gov/federal_register/code_of_federal_regulations/ibr_locations.html*. Copies may be obtained from the Director, Environmental Assistance Division (7408), Office of Pollution Prevention and Toxics, Environmental Protection Agency, Rm. E–543B, 1200 Pennsylvania Ave. NW., Washington, DC 20460–0001. This incorporation by reference was approved by the Director of the Federal Register in accordance with 5 U.S.C. 522(a) and 1 CFR part 51. The method is incorporated as it exists on the effective date of this rule and a notice of any change to the method will be published in the FEDERAL REGISTER.

(ii) *Reporting requirements*. (A) The benthic sediment invertebrate bioassay, if required, shall be completed and the final report submitted to EPA within 21 months of the effective date of the final rule.

(B) An interim progress report shall be submitted to EPA for the benthic sediment invertebrate bioassy 6 months after the initiation of the test.

(e) *Chemical fate testing*—(1) *Vapor pressure*—(i) *Required testing*. Vapor pressure testing shall be conducted with TBP in accordance with § 796.1950 of this chapter.

(ii) *Reporting requirements*. The vapor pressure test required in paragraph (d)(1) of this section shall be completed and the final report submitted to EPA by September 27, 1990.

(2) *Sediment and soil adsorption isotherm*—(i) *Required testing*. Sediment and soil absorption isotherm testing shall be conducted with TBP in accordance with § 796.2750 of this chapter and EPA will provide two soil and two sediment samples.

(ii) *Reporting requirements*. (A) The sediment and soil absorption isotherm test required under paragraph (d)(2) of this section shall be completed and the final report submitted to EPA by September 27, 1990.

(B) For the purpose of this section, the following provisions also apply:

(*1*) A Koc value shall be calculated for each test sediment using the equation Koc=K/ (percent of organic carbon in test sediment).

(*2*) [Reserved]

(3) *Hydrolysis as a function of pH at 25 °C*—(i) *Required testing*. Hydrolysis testing shall be completed with TBP in accordance with § 796.3500 of this chapter.

(ii) *Reporting requirements*. The hydrolysis test required under paragraph (e)(3)(i) of this section shall be completed and the final report submitted to EPA by September 27, 1990.

(f) *Effective date*. (1) The effective date of this final rule is September 27, 1989, except for paragraphs (c)(2)(ii)(A), (c)(3)(ii)(A), (c)(6)(i)(A), (c)(6)(i)(B)(*3*), (c)(8)(i), (c)(8)(ii)(A), (d)(5)(ii)(A), (d)(6)(ii)(A), (e)(1)(ii), (e)(2)(ii)(A), and (e)(3)(ii) of this section. The effective date for paragraphs (c)(2)(ii)(A), (c)(3)(ii)(A), (c)(8)(i), (e)(1)(ii), (e)(2)(ii)(A), and (e)(3)(ii) of this section is May 21, 1991. The effective date for (c)(8)(ii)(A), (d)(5)(ii)(A), and (d)(6)(ii)(A) of this section is June 12, 1992. The effective date for (c)(6)(i)(A), (c)(6)(i)(B)(*3*), and (c)(8)(ii)(A) is May 28, 1993.

(2) The guidelines and other test methods cited in this rule are referenced as they exist on the effective date of the final rule.

[54 FR 33413, Aug. 14, 1989; 56 FR 23231, May 21, 1991, as amended at 57 FR 24961, June 12, 1992; 58 FR 30992, May 28, 1993; 58 FR 34205, June 23, 1993; 60 FR 34467, July 3, 1995; 69 FR 18803, Apr. 9, 2004; 77 FR 46293, Aug. 3, 2012]

§ 799.4440 Triethylene glycol monomethyl ether.

(a) *Identification of test substance.* (1) Triethylene glycol monomethyl ether (TGME, CAS No. 112–35–6) shall be tested in accordance with this section.

(2) TGME of at least 90 percent purity shall be used as the test substance.

(b) *Persons required to submit study plans, conduct tests, and submit data.* All persons who manufacture or process TGME, other than as an impurity, after May 17, 1989, to the end of the reimbursement period shall submit letters of intent to conduct testing, submit study plans, conduct tests and submit data, or submit exemption applications as specified in this section, subpart A of this part, and parts 790 and 792 of this chapter for single-phase rulemaking.

(c) *Developmental neurotoxicity*—(1) *Required testing.* Developmental neurotoxicity testing shall be performed in the Sprague-Dawley rat by gavage in accordance with § 795.250 of this chapter except for the provision in paragraph (c)(3)(iii) of § 795.250.

(2) For the purpose of this section, the following provisions also apply:

(i) *Number of animals.* The objective is for a sufficient number of pregnant rats to be exposed to ensure that an adequate number of offspring are produced for neurotoxicity evaluation. At least 24 litters are recommended at each dose level.

(ii) *Dose levels and dose selection.* In the absence of developmental toxicity or maternal toxicity the maximum dose shall be 5 grams/kilogram.

(3) *Reporting requirements*—(i) The developmental neurotoxicity test shall be completed and the final report submitted to EPA within 21 months of the initiation of the test.

(ii) Progress reports shall be submitted to EPA at 6- month intervals, beginning six months after the initiation of the test.

(d) *Effective date.* (1) The effective date of this final rule is May 17, 1989, except for paragraph (c)(2)(i) and (c)(3)(i) of this section. The effective date for paragraph (c)(2)(ii) and (c)(3)(i) of this section is May 21, 1991.

(2) The guidelines and other test methods cited in this rule are referenced as they exist on the effective date of the final rule.

[54 FR 13477, Apr. 3, 1989; 56 FR 23232, May 21, 1991, as amended at 58 FR 34205, June 23, 1993]

Subpart C—Testing Consent Orders

§ 799.5000 Testing consent orders for substances and mixtures with Chemical Abstract Service Registry Numbers.

This section sets forth a list of substances and mixtures which are the subject of testing consent orders adopted under 40 CFR part 790. Listed below in Chemical Abstract Service (CAS) Registry Number order are the substances and mixtures which are the subject of these orders and the FEDERAL REGISTER citations providing public notice of such orders.

CAS Number	Substance or mixture name	Testing	FR Publication Date
67–64–1	Acetone	Health effects	January 23, 1995.
71–55–6	1,1,1-Trichloroethane	Health effects	August 23, 1989.
78–83–1	Isobutyl alcohol	Health effects	January 23, 1995.
79–10–7	Acrylic Acid	Health effects	March 4, 1992.
84–74–2	Di-*n*-butyl phthalate	Environmental effects	January 9, 1989.
84–75–3	Di-*n*-hexyl phthalate	Environmental effects	January 9, 1989.
		Chemical fate	January 9, 1989.
100–40–3	4-Vinylcyclohexene	Health effects	September 23, 1991.
		Chemical fate	September 23, 1991.
106–91–2	Glycidyl methacrylate	Health effects	January 26, 1995.
108–10–1	Methyl isobutyl ketone	Health effects	January 23, 1995.
109–99–9	Tetrahydrofuran	Health effects	January 23, 1995.

CAS Number	Substance or mixture name	Testing	FR Publication Date
110–82–7	Cyclohexane	Health Effects and Environmental Releases Report.	November 18, 1994.
112–35–6	Triethylene glycol monomethyl ether	Health effects	April 3, 1989.
112–50–5	Triethylene glycol monoethyl ether	Health effects	April 3, 1989.
117–81–7	Di-2-ethylhexyl phthalate	Chemical fate	January 9, 1989.
119–06–2	Ditridecyl phthalate	Chemical fate	January 9, 1989.
123–86–4	*N*-butyl acetate	Health effects	January 23, 1995.
131–11–3	Dimethly phthalate	Environmental effects	January 9, 1989.
141–78–6	Ethyl acetate	Health effects	January 23, 1995.
141–79–7	Mesityl oxide	Health effects	September 5, 1991.
143–22–6	Triethylene glycol monobutyl ether	Health effects	January 9, 1989.
143–33–9	Sodium cyanide	Chemical fate	December 17, 1991.
		Terrestrial effects	December 17, 1991.
556–67–2	Octamethylcyclotetrasiloxane (D4)	Chemical fate	January 10, 1989.
		Environmental effects	January 10, 1989.
		Environmental testing	April 4, 2014.
628–63–7	*N*-amyl acetate	Health effects	January 23, 1995.
872–50–4	*N*- methylpyrrolidone	Health effects	November 23, 1993.
994–05–8	Tertiary-amyl methyl ether	Health effects	March 21, 1995.
1634–04–4	Methyl tert-butyl ether	Health effects	March 31, 1988.
2461–18–9	Lauryl glycidyl ether [1]	Health effects	June 11, 1996.
3618–72–2	C.I. Disperse Blue 79:1 Acetamide,*N*-[5-[bis[2-(acetyloxy) ethyl]amino]-2-[(2-bromo-4, 6-dinitrophenyl) azo]-4-methoxyphenyl]-.	Health effects	November 21, 1989.
		Environmental effects	November 21, 1989.
3648–20–2	Diundecyl phthalate	Environmental effects	January 9, 1989.
4170–30–3	Crotonaldehyde	Environmental effects	November 9, 1989.
		Chemical fate	November 9, 1989.
4675–54–3	Bisphenol A diglycidyl ether	Health effects	August 1, 1994.
		Exposure evaluation	
15965–99–8	Hexadecyl glycidyl ether [1]	Health effects	June 11, 1996.
16245–97–9	*n*-Octadecyl glycidyl ether [1]	Health effects	June 11, 1996.
26761–40–0	Diisodecyl phthalate	Chemical fate	January 9, 1989.
38954–75–5	Tetradecyl glycidyl ether [1]	Health effects	June 11, 1996.
68081–84–5	Alkyl (C_{10}-C_{16}) glycidyl ether [1]	Health effects	June 11, 1996.
68515–47–9	Ditridecyl phthalate (mixed isomers)	Chemical fate	January 9, 1989.
68515–49–1	Diisodecyl phthalate (mixed isomers)	Chemical fate	January 9, 1989.
68515–50–4	Dihexyl phthalate (mixed isomers)	Environmental effects	January 9, 1989.
		Chemical fate	January 9, 1989.
68609–97–2	Alkyl (C_{12}-C_{14}) glycidyl ether [1]	Health effects	June 11, 1996.
84852–15–3*	4-Nonylphenol, branched	Environmental effects	February 21, 1990.
		Chemical fate	February 21, 1990.
120547-52-6	Alkyl (C_{12}-C_{13}) glycidyl ether	Health effects	March 22, 1996.
142844–00–6	Refractory ceramic fibers	Exposure monitoring	May 14, 1993.

[1] As represented by alkyl (C_{12}-C_{13}) glycidyl ether (CAS No. 120547–52–6)

[57 FR 18829, May 1, 1992, as amended at 57 FR 24961, June 12, 1992; 58 FR 28520, May 14, 1993; 58 FR 34205, June 23, 1993; 58 FR 61816, Nov. 23, 1993; 59 FR 38920, Aug. 1, 1994; 59 FR 59663, Nov. 18, 1994; 60 FR 4519, Jan. 23, 1995; 60 FR 5140, Jan. 26, 1995; 60 FR 14911, Mar. 21, 1995; 60 FR 31924, June 19, 1995; 61 FR 11742, Mar. 22, 1996; 61 FR 29487, June 11, 1996; 79 FR 18825, Apr. 4, 2014]

§ 799.5025 Testing consent orders for mixtures without Chemical Abstracts Service Registry Numbers.

This section sets forth a list of mixtures (with no Chemical Abstracts Service Registry Numbers) which are the subject of testing consent orders adopted under 40 CFR part 790. Listed below are the mixtures which are the subject of these orders and the FEDERAL REGISTER citations providing public notice of such orders.

Mixture/substance	Required test	FR citation
Di(heptyl, nonyl, undecyl) phthalate (D711P) as a mixture of the following six substances:		
(1) diheptyl phthalate (branched and linear isomers), CAS No. 68515–44–6	Environmental effects.	January 9, 1989.

Mixture/substance	Required test	FR citation
(2) dinonyl phthalate (branched and linear isomers), CAS No. 68515–45–7	.....do	Do.
(3) di(heptyl, nonyl) phthalate (branched and linear isomers), CAS No. 111381–89–6	.....do	Do.
(4) diundecyl phthalate (branched and linear isomers), CAS No. 3648–20–2	.....do	Do.
(5) di(heptyl, undecyl) phthalate (branched and linear isomers), CAS No., 111381–90–9	.....do	Do.
(6) di(nonyl, undecyl) phthalate (branched and linear isomers), CAS No. 111381–91–0)	.....do	Do.
Fluoropolymer composite substance:		
(1) For Dry Non-Melt Resin containing the following chemical substances as specified in the ECA:		
(i) Ethene, tetrafluoro-, homopolymer, CAS No. 9002–84–0	Environmental effects.	July 8, 2005.
(ii) Polytetrafluoroethylene, Document Control Number (DCN) 63040000018A	.....do	Do.
(iii) Propane, 1,1,1,2,2,3,3-heptafluoro-3-[(trifluoroethenyl)oxy]-, polymer with tetrafluoroethene, CAS No. 26655–00–5	.....do	Do.
(2) For Dry Melt Fluoropolymer Resin containing the following chemical substances as specified in the ECA:		
(i) 1-Propene, 1,1,2,3,3,3-hexafluoro-, polymer with tetrafluoroethene, CAS No. 25067–11–2	.....do	Do.
(ii) Propane, 1,1,1,2,2,3,3-heptafluoro-3-[(trifluoroethenyl)oxy]-, polymer with tetrafluoroethene, CAS No. 26655–00–5	.....do	Do.
(iii) Ethene, tetrafluoro-, polymer with trifluoro(pentafluoroethoxy) ethene, CAS No. 31784–04–0	.....do	Do.
(iv) 1-Propene, 1,1,2,3,3,3-hexafluoro-, polymer with 1,1-difluoroethene and tetrafluoroethene, CAS No. 25190–89–0	.....do	Do.
(v) ETFE, DCN 63040000026	.....do	Do.
(vi) 1-Propene, 1,1,2,3,3,3-hexafluoro-, polymer with ethene and tetrafluoroethene, CAS No. 35560–16–8	.....do	Do.
(3) For Dry Non-Melt Fluoroelastomer Resin/Gum containing the following chemical substances as specified in the ECA:		
(i) 1-Propene, 1,1,2,3,3,3-hexafluoro-, polymer with 1,1-difluoroethene, CAS No. 9011–17–0	.....do	Do.
(ii) 1-Propene, 1,1,2,3,3,3-hexafluoro-, polymer with 1,1-difluoroethene and tetrafluoroethene, CAS No. 25190–89–0	.....do	Do.
(iii) 1-Propene, polymer with 1,1- difluoroethene and tetrafluoroethene, CAS No. 54675–89–7	.....do	Do.
(iv) 1-Propene, polymer with tetrafluoroethene, CAS No. 27029–05–6	.....do	Do.
(v) Ethene, tetrafluoro-, polymer with trifluoro(trifluoromethoxy) ethene, CAS No. 26425–79–6	.....do	Do.
(vi) Ethene, chlorotrifluoro-, polymer with 1,1-difluoroethene, CAS No. 9010–75–7	.....do	Do.
(vii) Fluoroelastomer, DCN No. 63040000018C	.....do	Do.
(viii) Fluoroelastomer DCN 63040000018D	.....do	Do.
(ix) A low temperature fluoroelastomer, ACC No. 137678	.....do	Do.
(4) For Aqueous Fluoropolymer Dispersions containing the following chemical substances as specified in the ECA:		
(i) Ethene, tetrafluoro-, homopolymer, CAS No. 9002–84–0	.....do	Do.
(ii) 1-Propene, 1,1,2,3,3,3-hexafluoro-, polymer with tetrafluoroethene, CAS No. 25067–11–2	.....do	Do.
(iii) Propane, 1,1,1,2,2,3,3-heptafluoro-3- [(trifluoroethenyl)oxy]-, polymer with tetrafluoroethene, CAS No. 26655–00–5	.....do	Do.
(iv) 1-Propene, 1,1,2,3,3,3- hexafluoro-, polymer with 1,1-difluoroethene and tetrafluoroethene, CAS No. 25190–89–0	.....do	Do.
(v) Polytetrafluoroethylene, DCN No. 63040000018B	.....do	Do.
Fluorotelomer-based composite substance:		
(1) For Paper containing three of the following chemical substances as specified in the ECA:		

Mixture/substance	Required test	FR citation
(i) Perfluoroalkylethyl acrylate copolymer, EPA-designated accession number (ACC) 171790	Environmental effects.	July 8, 2005.
(ii) Perfluoroalkyl acrylate copolymer, ACC 158022	.....do	Do.
(iii) Perfluoroalkyl methacrylate polymer, EPA document control number (DCN) 63040000037A	.....do	Do.
(iv) Substituted methacrylate, propenoic acid, perfluoroalkyl esters, DCN 63040000033B	.....do	Do.
(v) Perfluoroalkyl acrylic polymer, DCN 63040000037C	.....do	Do.
(vi) Poly-.beta.-fluoroalkylethyl acrylate and alkyl acrylate, ACC 174993	.....do	Do.
(vii) Poly(.beta.-fluoroalkylethyl acrylate and alkyl acrylate), ACC 70430	.....do	Do.
(viii) Polysubstituted acrylic copolymer, ACC 157381	.....do	Do.
(ix) Perfluoroalkyl acrylate copolymer latex, ACC No. 70907	.....do	Do.
(2) For Textile containing six of the following chemical substances as specified in the ECA:		
(i) Perfluoroalkylethyl acrylate copolymer, EPA-designated accession number (ACC) 171790	.....do	Do.
(ii) Perfluoroalkyl acrylate copolymer, ACC 158022	.....do	Do.
(iii) Perfluoroalkyl methacrylate polymer, EPA document control number (DCN) 63040000037A	.....do	Do.
(iv) Substituted methacrylate, propenoic acid, perfluoroalkyl esters, DCN 63040000033B	.....do	Do.
(v) Perfluoroalkyl acrylic polymer, DCN 63040000037C	.....do	Do.
(vi) Poly-.beta.-fluoroalkylethyl acrylate and alkyl acrylate, ACC 174993	.....do	Do.
(vii) Poly(.beta.-fluoroalkylethyl acrylate and alkyl acrylate), ACC 70430	.....do	Do.
(viii) Polysubstituted acrylic copolymer, ACC 157381	.....do	Do.
(ix) Perfluoroalkyl acrylate copolymer latex, ACC 70907	.....do	Do.

[55 FR 3059, Jan. 30, 1990, as amended at 70 FR 39629, 39636, July 8, 2005]

Subpart D—Multichemical Test Rules

§ 799.5055 Hazardous waste constituents subject to testing.

(a) *Identification of test substances.* (1) The table in paragraph (c) of this section identifies those chemical substances that shall be tested in accordance with this section.

(2) Substances of at least 98-percent purity shall be used as the test substances.

(b) *Persons required to submit study plans, conduct tests, and submit data.* All persons who manufacuture (including import or manufacture as a byproduct) or process or intend to manufacture or process one or more of the substances in paragraph (c) of this section, other than as an impurity, after July 29, 1988, to the end of the reimbursement period shall submit letters of intent to conduct testing, submit study plans, conduct tests, and submit data, or submit exemption applications for those substances they manufacture or process, or intend to manufacture or process, as specified in this section, subpart A of this part, and parts 790 and 792 of this chapter for single-phase rulemaking.

(c) *Designation of testing.* The substances identified in the following table by name and CAS number shall be tested in accordance with the designated requirements under paragraphs (d) and (e) of this section. The paragraph numbers listed for a substance refer to the specific testing and reporting requirements specified in paragraphs (d) and (e) of this section.

Chemical name	CAS No.	Required testing under paragraphs (d) and (e) of this section
Acetamide, 2-fluoro	640–19–7	(e)(1)
Bis(2-chloroethoxy)methane.	111–91–1	(d)(2), (e)(1)
Bis(2-chloroisopropyl) ether.	108–60–1	(d)(2)
4-Bromobenzyl cyanide ...	16532–79–9	(d)(1), (2), (e)(1)
Bromoform	75–25–2	(d)(2)
4-Chlorobenzo-trichloride	5216–25–1	(e)(1)
2,4–D	94–75–7	(d)(2)
Dibromomethane 74–95–3 (d)(2).		
1,2-Dichlorobenzene	95–50–1	(d)(2)
1,1-Dichloroethane	75–34–3	(d)(2)
1,3-Dichloropropanol	96–23–1	(d)(1), (e)(1)
Dihydrosafrole	94–58–6	(d)(2)
Endrin	72–20–8	(d)(2)
Ethyl methacrylate	97–63–2	(d)(2)

Chemical name	CAS No.	Required testing under paragraphs (d) and (e) of this section
Maleic hydrazide	123–33–1	(d)(1), (2)
Malononitrile	109–77–3	(d)(1), (e)(1)
Methanethiol	74–93–1	(d)(1)
Methyl chloride	74–87–3	(d)(2)
p- Nitrophenol	100–02–7	(e)(1)
Pentachlorobenzene	608–93–5	(d)(2)
Pentachloroethane	76–01–7	(d)(2)
1,2,4,5-Tetrachlorobenzene.	95–94–3	(d)(2)
Trichloromethanethiol	75–70–7	(d)(1), (2), (e)(1)

(d) *Chemical fate testing*—(1) *Soil adsorption*—(i) *Required testing*. A soil adsorption isotherm test shall be conducted with the substances designated in paragraph (c) of this section in accordance with § 796.2750 of this chapter except that the provisions of § 796.2750 (b)(1)(vii)(A) shall not apply to 1,3-Dichloropropanol.

(ii) *Reporting requirements*. The sediment and soil adsorption isotherm tests shall be completed and the final results submitted to EPA within 9 months of the effective date of the final rule except that final results for testing of 1,3-Dichloropropanol and Methanethiol shall be completed and submitted to EPA within 11 months and 15 months, respectively, of the effective date of the final rule.

(2) *Hydrolysis*—(i) *Required testing*. A test of hydrolysis as a function of pH at 25 °C shall be conducted with the substances designated in paragraph (c) of this section in accordance with § 796.3500 of this chapter.

(ii) *Reporting requirements*. The hydrolysis tests with the substances designated in paragraph (c) of this section shall be completed and the final results submitted to EPA within 6 months of the effective date of the final rule except that hydrolysis tests for Dibromomethane, Dihydrosafrole, Ethyl methacrylate, and Methyl chloride shall be completed and the final results submitted to EPA within 12 months of the effective date of the final rule; and hydrolysis tests for 1,2-Dichlorobenzene and 1,2,4,5-Tetrachlorobenzene shall be completed and final results submitted to EPA within 9 months of the effective date of the final rule.

(e) *Health effects testing*—(1) *Subchronic toxicity*—(i) *Required test*. (A) An oral gavage subchronic toxicity test shall be conducted in the rat with the substances designated in paragraph (c) of this section except for bis(2-chloroethoxy) methane (CAS No. 111–91–1) in accordance with § 798.2650 of this chapter.

(B) For Bis(2-chloroethoxy)methane, an oral gavage subchronic toxicity test shall be conducted in the rat in accordance with § 798.2650 of this chapter except for the provisions in paragraphs (e)(9)(i)(A) and (e)(9)(i)(B). For Bis(2-chloroethoxy)methane, the following provisions also apply:

(*1*) Hematology determinations shall be carried out at least two times during the test period: Just after dosing on day 30 and just prior to terminal sacrifice. Hematology determinations which are appropriate to all studies are: Hematocrit, hemoglobin concentration, erythrocyte count, total and differential leukocyte count, and a measure of clotting potential such as clotting time, prothrombin time, thromboplastin time, or platelet count.

(*2*) Certain clinical biochemistry determinations on blood shall be carried out at least two times: Just after dosing on day 30 and just prior to terminal sacrifice. Test areas which are considered appropriate to all studies are: Electrolyte balance, carbohydrate metabolism, and liver and kidney function. The selection of specific tests will be influenced by observations on the mode of action of the substance. Suggested determinations are: Calcium, phosphorus, chloride, sodium, potassium, fasting glucose (with the period of fasting appropriate to the species), serum glutamic oxaloacetic transaminase (now known as serum aspartate aminotransferase), ornithine decarboxylase, gamma glutamyl transpeptidase, urea nitrogen, albumen blood creatinine, total bilirubin and total serum protein measurements. Other determinations which may be necessary for an adequate toxicological evaluation include: Analysis of lipids, hormones, acid/base balance, methemoglobin, and cholinesterase activity. Additional clinical biochemistry may be employed, where necessary, to extend the investigation of observed effects.

(ii) *Reporting requirements*. (A) The oral gavage subchronic tests with the

substances designated in paragraph (c) of this section shall be completed and submitted to EPA within 12 months of the effective date of the final rule except that the tests with Bis(2-chloroethoxy)methane, 1,3-Dichloropropanol, and Malononitrile shall be completed and the results submitted to EPA within 15 months of the effective date of the final rule.

(B) Progress reports for each test shall be submitted to the Agency 6 months after the effective date of the final rule.

(2) [Reserved]

(f) *Effective date.* (1) The effective date of the final rule is July 29, 1988, except for paragraphs (d)(1)(i), (d)(1)(ii), (d)(2)(ii), (e)(1)(i), and (e)(1)(ii)(A) of this section. The effective date of paragraphs (d)(1)(i), (d)(1)(ii), (d)(2)(ii), (e)(1)(i)(B) and (e)(1)(ii)(A) of this section is March 1, 1990. The effective date of paragraph (e)(1)(i)(A), is May 21, 1991.

(2) The guidelines and other test methods cited here are referenced as they exist on the effective date of the final rule.

[53 FR 22324, June 15, 1988; 53 FR 48645, Dec. 2, 1988, as amended at 54 FR 49760, Dec. 1, 1989; 55 FR 7324, Mar. 1, 1990; 56 FR 23232, May 21, 1991; 58 FR 34205, June 23, 1993]

§ 799.5075 Drinking water contaminants subject to testing.

(a) *Identification of test substance.* (1) 1,1,2,2-tetrachloroethane (CAS No. 79–34–5), and 1,3,5-trimethylbenzene (CAS No. 108–67–8) shall be tested as appropriate in accordance with this section.

(2) A test substance of at least 99 percent purity shall be used for Chloroethane, 1,1-dichloroethane, and 1,3,5-trimethylbenzene. A test substance of at least 98 percent purity shall be used for 1,1,2,2-tetrachloroethane.

(b) *Persons required to submit study plans, conduct tests, and submit data.* All persons who manufacture (including import and by-product manufacture) or process, or who intend to manufacture or process, the substances listed in paragraph (a) of this section after the effective date of this section to the end of the reimbursement period shall submit letters of intent to test, submit study plans, conduct tests, and submit data, or submit exemption applications as specified in this section, subpart A of this part, and parts 790 and 792 of this chapter for single-phase rulemaking, for the substances they manufacture subject to exclusions contained in § 790.42(a)(2), (a)(4) and (a)(5). These sections provide that processors, persons who manufacture less than 500 kg (1,100 lbs) annually, or persons who manufacture small quantities of the chemical solely for research and development as defined in § 790.42(a)(5) shall not be required to submit study plans, conduct tests and submit data, or submit exemption applications as specified in this section unless directed to do so in a subsequent notice as set forth in § 790.48(b).

(c) *Health effects testing*—(1) *Subacute toxicity*—(i) *Required testing.* (A) An oral 14-day repeated dose toxicity test shall be conducted with 1,1,2,2-tetrachloroethane, and 1,3,5-trimethylbenzene in accordance with § 798.2650 of this chapter except for the provisions in § 798.2650 (a), (b)(1), (c), (e)(3), (e)(4)(i), (e)(5), (e)(6), (e)(7)(i), (e)(7)(iv), (e)(7)(v), (e)(8)(vii), (e)(9)(i)(A), (e)(9)(i)(B), (e)(11)(v), and (f)(2)(i). Each substance shall be tested in one mammalian species, preferably a rodent, but a non-rodent may be used. The species and strain of animals used in this test should be the same as those used in the 90-day subchronic test required in paragraph (c)(2)(i) of this section. The tests shall be performed using drinking water. However, if, due to poor stability or palatability, a drinking water test is not feasible for a given substance, that substance shall be administered either by oral gavage, in the diet, or in capsules.

(B) For the purpose of this section, the following provisions also apply:

(*1*) *Purpose.* To assess and evaluate the toxic characteristics of a substance, the determination of subacute toxicity should be carried out after initial information on toxicity has been obtained by acute testing. The 14–day repeated dose oral study provides information on the health hazard likely to arise from repeated short-term exposure by the oral route over a very limited period of time. It has been designed to permit the determination of the no-observed-adverse-effect level

and toxic effects associated with continuous or repeated exposure to a test substance for 14 days and to evaluate reversibility, persistence, and delayed occurrence of toxic effects during a 14–day follow-up recovery period. The test is not capable of determining those effects that have a long latency period for development (e.g., carcinogenicity and life shortening). It will provide information on target organs and the possibility of accumulation, and can be used in selecting dose levels for subchronic studies and for establishing safety criteria for short-term human exposure.

(*2*) *Definitions*. Subacute oral toxicity is the manifestation of adverse effect(s) occurring as a result of the repeated daily exposure of experimental animals to a substance by the oral route for 14 days.

(*3*) *Principle of the test method*. The test substance is administered orally in graduated daily doses to several groups of experimental animals, one dose level per group, for a period of 14 days. During the period of administration the animals are observed daily to detect signs of toxicity. Animals which die during the period of administration are necropsied. At the conclusion of the test, all animals, except the satellite group, are necropsied and histopathological examinations are carried out. The satellite group is necropsied after the 14–day recovery period.

(*4*) *Satellite group (Rodent only)*. A satellite group of 20 animals (10 animals per sex) shall be treated with the high dose level for 14 days and observed for reversibility, persistence, and delayed occurrence of toxic effects for a post-treatment recovery period of at least 14 days.

(*5*) *Dose levels and dose selection*. In subacute toxicity tests, it is desirable to have a dose response relationship as well as a NOAEL. Therefore, at least 3 dose levels with a control and, where appropriate, a vehicle control (corresponding to the concentration of vehicle at the highest exposure level) shall be used. Doses shall be spaced appropriately to produce test groups with a range of toxic effects. The data should be sufficient to produce a dose-response curve.

(*6*) *Exposure conditions*. The animals are dosed with the test substance every day for 14 days.

(*7*) *Observation period*. All animals shall be observed daily during the 14–day exposure period.

(*8*) *Observation period of satellite group*. Animals in the satellite group scheduled for follow-up observations shall be kept for at least 14 days further without treatment to detect recovery from, or persistence of, and delayed onset of toxic effects and shall be observed daily.

(*9*) *Administration of test substance*. For substances of low toxicity, it is important to ensure that when administered in the drinking water, by gavage, in the diet, or in capsules, the quantities of the test substance involved do not interfere with normal nutrition. When the test substance is administered in the diet, either a constant dietary concentration (ppm) or a constant dose level in terms of the animals' body weight shall be used; the alternative used shall be specified in the final test report.

(*10*) *Time of administration of test substance*. For a substance administered by gavage or capsule, the dose shall be given at approximately the same time each day, and adjusted on day 7 to maintain a constant dose level in terms of animal body weight.

(*11*) *Observation of animals*. At the end of the 14–day exposure period, all survivors, except those in the satellite group, shall be necropsied. All survivors in the satellite group shall be necropsied after a recovery period of at least 14 days.

(*12*) *Hematology determinations*. Certain hematology determinations shall be carried out at least two times during the test period: Just prior to initiation of dosing if adequate historical baseline data are not available (baseline data) and just prior to terminal sacrifice at the end of the test period. Hematology determinations which are appropriate to all studies are: Hematocrit, hemoglobin concentration, erythrocyte count, total and differential leukocyte count, and a measure of clotting potential such as clotting time, prothrombin time, thromboplastin time, or platelet count.

(*13*) *Clinical biochemical determinations*. Certain clinical biochemistry determinations on blood should be carried out at least two times: Just prior to initiation of dosing (if adequate historical baseline data are not available) and just prior to terminal sacrifice at the end of the test period. Test areas which are considered appropriate to all studies are: Electrolyte balance, carbohydrate metabolism, and liver and kidney function. The selection of specific tests will be influenced by observations on the mode of action of the substance. Suggested determinations are: Calcium, phosphorus, chloride, sodium, potassium, fasting glucose (with the period of fasting appropriate to the species), serum alanine aminotransferase, serum aspartate aminotransferase, gamma glutamyl transpeptidase, urea nitrogen, albumin, blood creatinine, and total serum protein measurements. Other determinations which may be necessary for an adequate toxicological evaluation include: analyses of lipids, hormones, acid/base balance, methemoglobin, and cholinesterase activity. Additional clinical biochemistry may be employed, where necessary, to extend the investigation of observed effects.

(*14*) *Histopathology*. Histopathology of the lungs of all animals shall be performed. Special attention to examination of the lungs of rodents shall be made for evidence of infection since this provides a convenient assessment of the state of health of the animals.

(*15*) *Evaluation of the study results*. The findings of a subacute oral toxicity study should be evaluated in conjunction with the findings of preceding studies and considered in terms of the toxic effects and the necropsy and histopathological findings. The evaluation will include the relationship between the dose of the test substance and the presence or absence, the incidence and severity, of abnormalities, including behavioral and clinical abnormalities, gross lesions, identified target organs, body weight changes, effects on mortality and any other general or specific toxic effects. A properly conducted subacute test should provide a satisfactory estimation of a NOAEL.

(ii) *Reporting requirements*. (A) Each subacute test shall be completed and the final report submitted to EPA within 12 months of the date specified in paragraph (d)(1) of this section, except for 1,1,2,2-tetrachloroethane. The subacute testing for 1,1,2,2-tetrachloroethane. The subacute testing for 1,1,2,2-tetrachloroethane shall be completed and the final report submitted to EPA by February 15, 1996.

(B) Except for 1,3,5-trimethylbenzene, a progress report shall be submitted to EPA for each test beginning 6 months after the date specified in paragraph (d)(1) of this section and at 6–month intervals thereafter until the final report is submitted to EPA . The progress report for 1,3,5-trimethylbenzene shall be submitted to EPA by April 10, 1995.

(2) *Subchronic toxicity*—(i) *Required testing*. (A) An oral 90-day subchronic toxicity test shall be conducted with 1,3,5-trimethylbenzene in accordance with § 798.2650 of this chapter except for the provisions in § 798.2650 (e)(3), (e)(7)(i), and (e)(11)(v). The tests shall be performed using drinking water. However, if, due to poor stability or palatability, a drinking water test is not feasible for a given substance, that substance shall be administered either by oral gavage, in the diet, or in capsules.

(B) For the purpose of this section, the following provisions also apply:

(*1*) *Satellite group (Rodent only)*. A satellite group of 20 animals (10 animals per sex) shall be treated with the high dose level for 90 days and observed for reversibility, persistence, and delayed occurrence of toxic effects for a post-treatment period of appropriate length, normally not less than 28 days.

(*2*) *Histopathology*. Histopathology of the lungs of all animals shall be performed. Special attention to examination of the lungs of rodents shall be made for evidence of infection since this provides a convenient assessment of the state of health of the animals.

(ii) *Reporting requirements*. (A) The subchronic testing for chloroethane shall be completed and the final report submitted to EPA by June 27, 1995. The subchronic testing for 1,1-dichloroethane and 1,1,2,2-tetrachlorethane shall be completed and the final report submitted to EPA by August 27, 1995. The subchronic testing for 1,3,5-trimethylbenzene shall be

completed and the final report submitted to EPA by April 10, 1995.

(B) For each test, a progress report shall be submitted to EPA beginning 9 months after the date specified in paragraph (d)(1) of this section and at 6–month intervals thereafter until the final report is submitted to EPA.

(d) *Effective date.* (1) This section is effective on December 27, 1993, except for paragraphs (a)(1), (a)(2), (c)(1)(i)(A), (c)(1)(ii)(A), (c)(1)(ii)(B), (c)(2)(i)(A), and (c)(2)(ii)(A). The effective date for paragraphs (a)(2), (c)(1)(ii)(B), and (c)(2)(ii)(A) is September 29, 1995. The effective date for paragraphs (a)(1), (c)(1)(i)(A), and (c)(2)(i)(A) is February 27, 1996. The effective date for paragraph (c)(1)(ii)(A) is June 30, 1997.

(2) The guidelines and other test methods cited in this section are referenced as they exist on the effective date of the final rule.

[58 FR 59681, Nov. 10, 1993; 58 FR 1992, Jan. 13, 1994, as amended at 60 FR 56956, Nov. 13, 1995; 61 FR 7223, Feb. 27, 1996; 62 FR 35105, June 30, 1997]

§ 799.5085 Chemical testing requirements for first group of high production volume chemicals (HPV1).

(a) *What substances will be tested under this section*? Table 2 in paragraph (j) of this section identifies the chemical substances that must be tested under this section. For the chemical substances identified as ''Class 1'' substances in Table 2 in paragraph (j) of this section, the purity of each chemical substance must be 99% or greater, except for 1,3-propanediol, 2,2-bis[(nitrooxy)methyl]-, dinitrate (ester) (CAS No. 78–11–5), also known as pentaerythritol tetranitrate (PETN). PETN cannot be tested at 99% purity because of its explosive properties. It must be diluted in water or tested as a stabilized mixture with an appropriate stabilizer (e.g., D-lactose monohydrate is the stabilizer in PETN, NF which is a mixture of 20% by weight PETN and 80% by weight D-lactose monohydrate). The stabilizer used must be tested as a control. For the chemical substances identified as ''Class 2'' substances in Table 2 in paragraph (j), a representative form of each chemical substance must be tested. The representative form selected for a given Class 2 chemical substance should meet industry or consensus standards where they exist.

(b) *Am I subject to this section*? (1) If you manufacture (including import) or intend to manufacture, or process or intend to process, any chemical substance listed in Table 2 in paragraph (j) of this section at any time from April 17, 2006 to the end of the test data reimbursement period as defined in 40 CFR 791.3(h), you are subject to this section with respect to that chemical substance.

(2) If you do not know or cannot reasonably ascertain that you manufacture or process a chemical substance listed in Table 2 in paragraph (j) of this section during the time period described in paragraph (b)(1) of this section (based on all information in your possession or control, as well as all information that a reasonable person similarly situated might be expected to possess, control, or know, or could obtain without an unreasonable burden), you are not subject to this section with respect to that chemical substance.

(c) *If I am subject to this section, when must I comply with it*? (1)(i) Persons subject to this section are divided into two groups, as set forth in Table 1 of this paragraph: Tier 1 (persons initially required to comply) and Tier 2 (persons not initially required to comply). If you are subject to this section, you must determine if you fall within Tier 1 or Tier 2, based on Table 1 of this paragraph.

TABLE 1—PERSONS SUBJECT TO THE RULE: PERSONS IN TIER 1 AND TIER 2

Persons initially required to comply with this section (Tier 1)	Persons not initially required to comply with this section (Tier 2)
Persons not otherwise specified in column 2 of this table that manufacture (as defined at TSCA section 3(7)) or intend to manufacture a chemical substance included in this section.	A. Persons who manufacture (as defined at TSCA section 3(7)) or intend to manufacture a chemical substance included in this section solely as one or more of the following: —As a byproduct (as defined at 40 CFR 791.3(c)); —As an impurity (as defined at 40 CFR 790.3); —As a naturally occurring substance (as defined at 40 CFR 710.4(b)); —As a non-isolated intermediate (as defined at 40 CFR 704.3); —As a component of a Class 2 substance (as described at 40 CFR 720.45(a)(1)(i)); —In amounts of less than 500 kg (1,100 lbs.) annually (as described at 40 CFR 790.42(a)(4)); or —For R & D (as described at 40 CFR 790.42(a)(5)). B. Persons who process (as defined at TSCA section 3(10)) or intend to process a chemical substance included in this section (see 40 CFR 790.42(a)(2)).

(ii) Table 1 of paragraph (c)(1)(i) of this section expands the list of persons specified in §790.42(a)(2), (a)(4), and (a)(5) of this chapter, who, while legally subject to this section, must comply with the requirements of this section only if directed to do so by EPA under the circumstances set forth in paragraphs (c)(5) and (c)(8) of this section.

(2) If you are in Tier 1 with respect to a chemical substance listed in Table 2 in paragraph (j) of this section, you must, for each test required under this section for that chemical substance, either submit to EPA a letter of intent to test or apply to EPA for an exemption from testing. The letter of intent to test or the exemption application must be received by EPA no later than May 15, 2006.

(3) If you are in Tier 2 with respect to a chemical substance listed in Table 2 in paragraph (j) of this section, you are considered to have an automatic conditional exemption and you will be required to comply with this section with regard to that chemical substance only if directed to do so by EPA under paragraphs (c)(5) or (c)(8) of this section.

(4) If no person in Tier 1 has notified EPA of its intent to conduct one or more of the tests required by this section on any chemical substance listed in Table 2 in paragraph (j) of this section by May 15, 2006, EPA will publish a FEDERAL REGISTER document that will specify the test(s) and the chemical substance(s) for which no letter of intent has been submitted, and notify manufacturers and processors in Tier 2 of their obligation to submit a letter of intent to test or to apply for an exemption from testing.

(5) If you are in Tier 2 with respect to a chemical substance listed in Table 2 in paragraph (j) of this section, and if you manufacture or process this chemical substance as of April 17, 2006, or within 30 days after publication of the FEDERAL REGISTER document described in paragraph (c)(4) of this section, you must, for each test specified for that chemical substance in the document described in paragraph (c)(4) of this section, either submit to EPA a letter of intent to test or apply to EPA for an exemption from testing. The letter of intent to test or the exemption application must be received by EPA no later than 30 days after publication of the document described in paragraph (c)(4) of this section.

(6) If no manufacturer or processor has notified EPA of its intent to conduct one or more of the tests required by this section for any of the chemical substances listed in Table 2 in paragraph (j) of this section within 30 days after the publication of the FEDERAL REGISTER document described in paragraph (c)(4) of this section, EPA will notify all manufacturers and processors of those chemical substances of this fact by certified letter or by publishing a FEDERAL REGISTER document specifying the test(s) for which no letter of intent has been submitted. This letter or FEDERAL REGISTER document will additionally notify all manufacturers and processors that all exemption applications concerning the test(s) have been denied, and will give the manufacturers and processors of the chemical substance(s) an opportunity to take corrective action.

(7) If no manufacturer or processor has notified EPA of its intent to conduct one or more of the tests required

by this section for any of the chemical substances listed in Table 2 in paragraph (j) of this section within 30 days after receipt of the certified letter or publication of the FEDERAL REGISTER document described in paragraph (c)(6) of this section, all manufacturers and processors subject to this section with respect to that chemical substance who are not already in violation of this section will be in violation of this section.

(8) If a problem occurs with the initiation, conduct, or completion of the required testing or the submission of the required data with respect to a chemical substance listed in Table 2 in paragraph (j) of this section, under the procedures in §§ 790.93 and 790.97 of this chapter, EPA may initiate termination proceedings for all testing exemptions with respect to that chemical substance and may notify persons in Tier 1 and Tier 2 that they are required to submit letters of intent to test or exemption applications within a specified period of time.

(9) If you are required to comply with this section, but your manufacturing or processing of a chemical substance listed in Table 2 in paragraph (j) of this section begins after the applicable compliance date referred to in paragraphs (c)(2), (c)(5), or (c)(8) of this section, you must either submit a letter of intent to test or apply to EPA for an exemption. The letter of intent to test or the exemption application must be received by EPA no later than the day you begin manufacturing or processing.

(d) *What must I do to comply with this section*? (1) To comply with this section you must either submit to EPA a letter of intent to test, or apply to and obtain from EPA an exemption from testing.

(2) For each test with respect to which you submit to EPA a letter of intent to test, you must conduct the testing specified in paragraph (h) of this section and submit the test data to EPA.

(3) You must also comply with the procedures governing test rule requirements in part 790 of this chapter, as modified by this section, including the submission of letters of intent to test or exemption applications, the conduct of testing, and the submission of data; Part 792—Good Laboratory Practice Standards of this chapter; and this section. The following provisions of 40 CFR part 790 do not apply to this section: Paragraphs (a), (d), (e), and (f) of § 790.45; paragraph (a)(2) and paragraph (b) of §§ 790.80; 790.82(e)(1); 790.85; and 790.48.

(e) *If I do not comply with this section, when will I be considered in violation of it*? You will be considered in violation of this section as of 1 day after the date by which you are required to comply with this section.

(f) *How are EPA's data reimbursement procedures affected for purposes of this section*? If persons subject to this section are unable to agree on the amount or method of reimbursement for test data development for one or more chemical substances included in this section, any person may request a hearing as described in 40 CFR part 791. In the determination of fair reimbursement shares under this section, if the hearing officer chooses to use a formula based on production volume, the total production volume amount will include amounts of a chemical substance produced as an impurity.

(g) *Who must comply with the export notification requirements*? Any person who exports, or intends to export, a chemical substance listed in Table 2 in paragraph (j) of this section is subject to part 707, subpart D, of this chapter.

(h) *How must I conduct my testing*? (1) The tests that are required for each chemical substance are indicated in Table 2 in paragraph (j) of this section. The test methods that must be followed are provided in Table 3 in paragraph (j) of this section. You must proceed in accordance with these test methods as required according to Table 3 in paragraph (j) of this section, or as appropriate if more than one alternative is allowed according to Table 3 in paragraph (j) of this section. Included in Table 3 in paragraph (j) of this section are the following 11 methods which are incorporated by reference:

(i) Standard Test Method for Relative Initial and Final Melting Points and the Melting Range of Organic Chemicals, ASTM E 324–99.

(ii) Standard Test Method for Partition Coefficient (N-Octanol/Water) Estimation by Liquid Chromatography, ASTM E 1147–92. (Reapproved 1997)

(iii) Standard Guide for Conducting Acute Toxicity Tests on Test Materials with Fishes, Macroinvertebrates, and Amphibians, ASTM E 729–96. (Reapproved 2002)

(iv) Standard Test Method for Measurements of Aqueous Solubility, ASTM E 1148–02.

(v) Standard Test Method for Estimating Acute Oral Toxicity in Rats, ASTM E 1163–98. (Reapproved 2002)

(vi) Standard Guide for Conducting Daphnia Magna Life-Cycle Toxicity Tests, ASTM E 1193–97. (Reapproved 2004)

(vii) Standard Guide for Conducting Static Toxicity Tests with Microalgae, ASTM E 1218–04.

(viii) Standard Test Method for Determining Biodegradability of Organic Chemicals in Semi-Continuous Activated Sludge (SCAS), ASTM E 1625–94. (Reapproved 2001)

(ix) Standard Test Method for Vapor Pressure of Liquids by Ebulliometry, ASTM E 1719–97.

(x) Standard Test Method for Determining Vapor Pressure by Thermal Analysis, ASTM E 1782–03.

(xi) Water Quality—Evaluation of Ultimate Aerobic Biodegradability of Organic Compounds in Aqueous Medium—Static Test (Zahn-Wellens Method), Second Edition, June 1, 1999, ISO 9888–99.

(2) The Director of the Federal Register approved this incorporation by reference in accordance with 5 U.S.C. 552(a) and 1 CFR part 51. You may obtain copies of the ASTM guidelines from the American Society for Testing and Materials, 100 Bar Harbor Dr., West Conshohocken, PA 19428–2959, and a copy of the ISO guideline from the International Organization for Standardization, Case Postale, 56 CH-1211 Geneve 20 Switzerland. You may inspect each test method at the EPA Docket Center, EPA West, Rm. B102, 1301 Constitution Ave., NW., Washington, DC or at the National Archives and Records Administration (NARA). For information on the availability of this material at NARA, call (202) 741–6030, or go to: *http://www.archives.gov/federal_register/code_of_federal_regulations/ibr_locations.html.*

(i) *Reporting requirements.* A final report for each specific test for each subject chemical substance must be received by EPA by May 17, 2007, unless an extension is granted in writing pursuant to 40 CFR 790.55. A robust summary of the final report for each specific test should be submitted in addition to and at the same time as the final report. The term ''robust summary'' is used to describe the technical information necessary to adequately describe an experiment or study and includes the objectives, methods, results, and conclusions of the full study report which can be either an experiment or in some cases an estimation or prediction method. Guidance for the compilation of robust summaries is described in a document entitled *Draft Guidance on Developing Robust Summaries* which is available at: *http://www.epa.gov/chemrtk/robsumgd.htm.*

(j) *Designation of specific chemical substances and testing requirements.* The chemical substances identified by chemical name, Chemical Abstract Service Number (CAS No.), and class in Table 2 of this paragraph must be tested in accordance with the requirements designated in Tables 2 and 3 of this paragraph, and the requirements described in 40 CFR Part 792—Good Laboratory Practice Standards:

TABLE 2—CHEMICAL SUBSTANCES AND TESTING REQUIREMENTS

CAS No.	Chemical name	Class	Required tests (see table 3 of this section)
74–95–3	Methane, dibromo-	1	A, C1, E2, F2.
78–11–5	1,3-Propanediol, 2,2-bis[(nitrooxy)methyl]-, dinitrate (ester).	1	A4, A5, B, C6, F2.
84–65–1	9,10-Anthracenedione	1	A4, A5, F2.
110–44–1	2,4-Hexadienoic acid, (*E,E*)-	1	A, C4.
112–52–7	1-Chlorododecane	1	A2, A3, A4, A5, B, C3, D, E1, E2, F1.
118–82–1	Phenol, 4,4'-methylenebis[2,6bis(1,1-dimethylethyl)]-.	1	A1, A2, A3, B, E2.
149–44–0	Methanesulfinic acid, hydroxy-, monosodium salt.	1	A1, A5, E2, F1.

TABLE 2—CHEMICAL SUBSTANCES AND TESTING REQUIREMENTS—Continued

CAS No.	Chemical name	Class	Required tests (see table 3 of this section)
409–02–9	Heptenone, methyl-	2	A, B, C1, D, E1, E2, F1.
594–42–3	Methanesulfenyl chloride, trichloro-	1	A, B, C1, E1, E2, F2.
1324–76–1	Benzenesulfonic acid, [[4-[[4-(phenylamino)phenyl][4-(phenylimino)-2,5-cyclohexadien-1-ylidene]methyl]phenyl]amino]-	2	A4, C2, F1.
2941–64–2	Carbonochloridothioic acid, *S*-ethyl ester	1	A, B, C1, E2, F1.
8005–02–5	C.I. Solvent Black 7	2	A, F2.

TABLE 3—KEY TO THE TEST REQUIREMENTS DENOTED BY ALPHANUMERIC SYMBOLS IN TABLE 2 OF THIS PARAGRAPH

Testing category	Test symbol	Test requirements and references	Special conditions
Physical/chemical properties	A	1. Melting Point: ASTM E 324 (capillary tube) 2. Boiling Point: ASTM E 1719 (ebulliometry) 3. Vapor Pressure: ASTM E 1782 (thermal analysis) 4. *n*-Octanol/Water Partition Coefficient (log 10 basis) or log K_{ow}: (See special conditions for the log K_{ow} test requirement and select the appropriate method to use, if any, from those listed in this column.) Method A: 40 CFR 799.6755 (shake flask) Method B: ASTM E 1147 (liquid chromatography) Method C: 40 CFR 799.6756 (generator column) 5. *Water Solubility*: (See special conditions for the water solubility test requirement and select the appropriate method to use, if any, from those listed in this column.) Method A: ASTM E 1148 (shake flask) Method B: 40 CFR 799.6784 (shake flask) Method C: 40 CFR 799.6784 (column elution) Method D: 40 CFR 799.6786 (generator column)	*n*-Octanol/water Partition Coefficient or log K_{ow}: Which method is required, if any, is determined by the test substance's estimated[1] log K_{ow} as follows: log K_{ow} <0: no testing required. log K_{ow} range 0–1: Method A or B. log K_{ow} range >1–4: Method A or B or C. log K_{ow} range >4–6: Method B or C. log K_{ow} >6: Method C. Test sponsors are required to provide in the final study report the underlying rationale for the method selected. In order to ensure environmental relevance, EPA highly recommends that the selected study be conducted at pH 7. *Water Solubility*: Which method is required, if any, is determined by the test substance's estimated[2] water solubility. Test sponsors are required to provide in the final study report the underlying rationale for the method selected. In order to ensure environmental relevance, EPA highly recommends that the selected study be conducted at pH 7. >5,000 mg/L: Method A or B. >10 mg/L —5,000 mg/L: Method A, B, C, or D. >0.001 mg/L—10 mg/L: Method C or D. ≤0.001 mg/L: No testing required.
Environmental fate and pathways—Inherent biodegradation	B	For B, choose either of the methods listed in this column: 1. ASTM 1625 (semicontinuous activated sludge test) OR 2. ISO 9888 (Zahn-Wellens method)	None
Aquatic toxicity	C1	For C1, Test Group 1 or Test Group 2 listed in this column must be used to fulfill the testing requirements—See special conditions. *Test Group 1 for C1*: 1. Acute Toxicity to Fish: ASTM E 729 2. Acute Toxicity to Daphnia: ASTM E 729 3. Toxicity to Plants (Algae): ASTM E 1218 *Test Group 2 for C1*: 1. Chronic Toxicity to Daphnia: ASTM E 1193 2. Toxicity to Plants (Algae): ASTM E 1218	The following are the special conditions for C1, C2, C3, C4, C5, and C7 testing; there are no special conditions for C6. If log K_{ow} <4.2: Test Group 1 is required If log K_{ow} ≥4.2: Test Group 2 is required Which test group is required is determined by the test substance's measured log K_{ow} as obtained under A[3].
	C2	For C2, Test Group 1 or Test Group 2 listed in this column must be used to fulfill the testing requirements—See special conditions. *Test Group 1 for C2*: 1. Acute Toxicity to Daphnia: ASTM E 729 2. Toxicity to Plants (Algae): ASTM E 1218 *Test Group 2 for C2*: 1. Chronic Toxicity to Daphnia: ASTM E 1193 2. Toxicity to Plants (Algae): ASTM E 1218	

TABLE 3—KEY TO THE TEST REQUIREMENTS DENOTED BY ALPHANUMERIC SYMBOLS IN TABLE 2 OF THIS PARAGRAPH—Continued

Testing category	Test symbol	Test requirements and references	Special conditions
	C3	For C3, Test Group 1 or Test Group 2 listed in this column must be used to fulfill the testing requirements—See special conditions. *Test Group 1 for C3*: 1. Acute Toxicity to Fish: ASTM E 729 2. Toxicity to Plants (Algae): ASTM E 1218 Test Group 2 for C3: 1. Chronic Toxicity to Daphnia: ASTM E 1193 2. Toxicity to Plants (Algae): ASTM E 1218	
	C4	For C4, Test Group 1 or Test Group 2 listed in this column must be used to fulfill the testing requirements—See special conditions. *Test Group 1 for C4*: 1. Acute Toxicity to Fish: ASTM E 729 2. Acute Toxicity to Daphnia: ASTM E 729 *Test Group 2 for C4*: 1. Chronic Toxicity to Daphnia: ASTM E 1193	
	C5	For C5, Test Group 1 or Test Group 2 below must be used to fulfill the testing requirements—See special conditions. *Test Group 1 for C5*: 1. Acute Toxicity to Daphnia: ASTM E 729 *Test Group 2 for C5*: 1. Chronic Toxicity to Daphnia: ASTM E 1193	
	C6	Toxicity to Plants (Algae): ASTM E 1218	
	C7	For C7, Test Group 1 or Test Group 2 of this column must be used to fulfill the testing requirements—See special conditions. *Test Group 1 for C7*: 1. Acute Toxicity to Fish: ASTM E 729 *Test Group 2 for C7*: 1. Chronic Toxicity to Daphnia: ASTM E 1193	
Mammalian toxicity—Acute	D	See special conditions for this test requirement and select the method that must be used from those listed in this column. Method A: Acute Inhalation Toxicity (rat): 40 CFR 799.9130 Method B: EITHER: 1. Acute (Up/Down) Oral Toxicity (rat): ASTM E 1163 OR 2. Acute (Up/Down) Oral Toxicity (rat): 40 CFR 799.9110(d)(1)(i)(A)	Which testing method is required is determined by the test substance's physical state at room temperature (25 °C). For those test substances that are gases at room temperature, Method A is required; otherwise, use either of the two methods listed under Method B. In Method B, 40 CFR 799.9110(d)(1)(i)(A) refers to the OECD 425 Up/Down Procedure[4]. Estimating starting dose for Method B: Data from the neutral red uptake basal cytotoxicity assay[5] using normal human keratinocytes or mouse BALB/c 3T3 cells may be used to estimate the starting dose.
Mammalian toxicity—Genotoxicity	E1	Bacterial Reverse Mutation Test (*in vitro*): 40 CFR 799.9510	None
	E2	Conduct any one of the following three tests for chromosomal damage: *In vitro* Mammalian Chromosome Aberration Test: 40 CFR 799.9537 OR Mammalian Bone Marrow Chromosomal Aberration Test (*in vivo* in rodents: mouse (preferred species), rat, or Chinese hamster): 40 CFR 799.9538 OR Mammalian Erythrocyte Micronucleus Test [sampled in bone marrow] (*in vivo* in rodents: Mouse (preferred species), rat, or Chinese hamster): 40 CFR 799.9539	Persons required to conduct testing for chromosomal damage are encouraged to use the *in vitro* Mammalian Chromosome Aberration Test (40 CFR 799.9537) to generate the needed data unless known chemical properties (e.g., physical/chemical properties, chemical class characteristics) preclude its use. A subject person who uses one of the *in vivo* methods instead of the *in vitro* method to address a chromosomal damage test requirement must submit to EPA a rationale for conducting that alternate test in the final study report.

TABLE 3—KEY TO THE TEST REQUIREMENTS DENOTED BY ALPHANUMERIC SYMBOLS IN TABLE 2 OF THIS PARAGRAPH—Continued

Testing category	Test symbol	Test requirements and references	Special conditions
Mammalian toxicity—Repeated dose/reproduction/developmental	F1	Combined Repeated Dose Toxicity Study with the Reproduction/Developmental Toxicity Screening Test: 40 CFR 799.9365 OR Reproduction/Developmental Toxicity Screening Test: 40 CFR 799.9355 AND Repeated Dose 28–Day Oral Toxicity Study in rodents: 40 CFR 799.9305	Where F1 is required, EPA recommends use of the Combined Repeated Dose Toxicity Study with the Reproduction/Developmental Toxicity Screening Test (40 CFR 799.9365). However, there may be valid reasons to test a particular chemical using both 40 CFR 799.9355 and 40 CFR 799.9305 to fill Mammalian Toxicity—Repeated Dose/Reproduction/Developmental data needs. A subject person who uses the combination of 40 CFR 799.9355 and 40 CFR 799.9305 in place of 40 CFR 799.9365 must submit to EPA a rationale for conducting these alternate tests in the final study reports. Where F2 or F3 is required, no rationale for conducting the required test need be provided in the final study report.
	F2	Reproduction/Developmental Toxicity Screening Test: 40 CFR 799.9355	
	F3	Repeated Dose 28–Day Oral Toxicity Study in rodents: 40 CFR 799.9305	

[1] EPA recommends, but does not require, that log K_{ow} be quantitatively estimated prior to initiating this study. One method, among many similar methods, for estimating log K_{ow} is described in the article entitled *Atom/Fragment Contribution Method for Estimating Octanol-Water Partition Coefficients*) by W.M. Meylan and P.H. Howard in the *Journal of Pharmaceutical Sciences.* 84(1):83–92. January 1992. This reference is available under docket ID number EPA–HQ–OPPT–2005–0033 at the EPA Docket Center, Rm. B102, 1301 Constitution Ave., NW., Washington, DC, from 8:30 a.m. to 4:30 p.m., Monday through Friday, excluding legal holidays.

[2] EPA recommends, but does not require, that water solubility be quantitatively estimated prior to initiating this study. One method, among many similar methods, for estimating water solubility is described in the article entitled *Improved Method for Estimating Water Solubility From Octanol/Water Partition Coefficient* by W.M. Meylan, P.H. Howard, and R.S. Boethling in *Environmental Toxicology and Chemistry.* 15(2):100–106. 1996. This reference is available under docket ID number EPA–HQ–OPPT–2005–0033 at the EPA Docket Center, Rm. B102, 1301 Constitution Ave., NW., Washington, DC, from 8:30 a.m. to 4:30 p.m., Monday through Friday, excluding legal holidays.

[3] Chemical substances that are dispersible in water may have log K_{ow} values greater than 4.2 and may still be acutely toxic to aquatic organisms. EPA recommends, but does not require, that test sponsors who wish to conduct Test Group 1 studies on such chemicals to submit to EPA for approval a written request to conduct Test Group 1 studies 90 days prior to conducting such studies. The written request should include the rationale for conducting Test Group 1 studies.

[4] The OECD 425 Up/Down Procedure, revised by OECD in December 2001, is available under docket ID number EPA–HQ–OPPT–2005–0033 at the EPA Docket Center, Rm. B102, 1301 Constitution Ave., NW., Washington, DC, from 8:30 a.m. to 4:30 p.m., Monday through Friday, excluding legal holidays.

[5] The neutral red uptake basal cytotoxicity assay, which may be used to estimate the starting dose for the mammalian toxicity-acute endpoint, is available under docket ID number EPA–HQ–OPPT–2005–0033 at the EPA Docket Center, Rm. B102, 1301 Constitution Ave., NW., Washington, DC, from 8:30 a.m. to 4:30 p.m., Monday through Friday, excluding legal holidays.

(k) *Effective date.* This section is effective on April 17, 2006.

[71 FR 13730, Mar. 16, 2006, as amended at 71 FR 71062, Dec. 8, 2006; 77 FR 15617, Mar. 16, 2012; 77 FR 28282, May 14, 2012; 78 FR 27863, May 13, 2013]

§ 799.5087 Chemical testing requirements for second group of high production volume chemicals (HPV2).

(a) *What substances will be tested under this section?* Table 2 in paragraph (j) of this section identifies the chemical substances that must be tested under this section. For the chemical substances identified as ''Class 1'' chemical substances in Table 2 in paragraph (j) of this section, the purity of each chemical substance must be 99% or greater, unless otherwise specified in this section. For the chemical substances identified as ''Class 2'' chemical substances in Table 2 in paragraph (j), a representative form of each chemical substance must be tested. The representative form selected for a given Class 2 chemical substance should meet industry or consensus standards where they exist.

(b) *Am I subject to this section?* (1) If you manufacture (including import) or intend to manufacture, or process or intend to process, any chemical substance listed in Table 2 in paragraph (j) of this section at any time from February 7, 2011 to the end of the test data reimbursement period as defined in 40 CFR 791.3(h), you are subject to this section with respect to that chemical substance.

(2) If you do not know or cannot reasonably ascertain that you manufacture or process a chemical substance listed in Table 2 in paragraph (j) of this section during the time period described in paragraph (b)(1) of this section (based on all information in your possession or control, as well as all information that a reasonable person similarly situated might be expected to possess, control, or know, or could obtain without unreasonable burden), you are not subject to this section with respect to that chemical substance.

(c) *If I am subject to this section, when must I comply with it?* (1)(i) Persons subject to this section are divided into two groups, as set forth in Table 1 of this paragraph: Tier 1 (persons initially required to comply), and Tier 2 (persons not initially required to comply). If you are subject to this section, you must determine if you fall within Tier 1 or Tier 2, based on Table 1 of this paragraph.

TABLE 1—PERSONS SUBJECT TO THE RULE: PERSONS IN TIER 1 AND TIER 2

Persons initially required to comply with this section (Tier 1).	Persons not initially required to comply with this section (Tier 2).
Persons not otherwise specified in column 2 of this table that manufacture (as defined at TSCA section 3(7)) or intend to manufacture a chemical substance included in this section.	Tier 2A. Persons who manufacture (as defined at TSCA section 3(7)) or intend to manufacture a chemical substance included in this section solely as one or more of the following: —As a byproduct (as defined at 40 CFR 791.3(c)); —As an impurity (as defined at 40 CFR 790.3); —As a naturally occurring substance (as defined at 40 CFR 710.4(b)); As a non-isolated intermediate (as defined at 40 CFR 704.3); —As a component of a Class 2 substance (as described at 40 CFR 720.45(a)(1)(i)); —In amounts of less than 500 kg (1,100 lbs) annually (as described at 40 CFR 790.42(a)(4)); or —For research and development (as described at 40 CFR 790.42(a)(5)). B. Persons who process (as defined at TSCA section 3(10)) or intend to process a chemical substance included in this section (see 40 CFR 790.42(a)(2)).

Note: kg—kilogram, TSCA—Toxic Substances Control Act.

(ii) Table 1 of paragraph (c)(1)(i) of this section expands the list of persons in Tier 2, that is, those persons specified in 40 CFR 790.42(a)(2), (a)(4), and (a)(5), who, while legally subject to this section, must comply with the requirements of this section only if directed to do so by EPA under the circumstances set forth in paragraphs (c)(4), (c)(5), (c)(6), (c)(7), and (c)(10) of this section.

(2) If you are in Tier 1 with respect to a chemical substance listed in Table 2 in paragraph (j) of this section, you must, for each test required under this section for that chemical substance, either submit to EPA a letter of intent to test or apply to EPA for an exemption from testing. The letter of intent to test or the exemption application must be received by EPA no later than March 9, 2011.

(3) If you are in Tier 2 with respect to a chemical substance listed in Table 2 in paragraph (j) of this section, you are considered to have an automatic conditional exemption and you will be required to comply with this section with regard to that chemical substance only if directed to do so by EPA under paragraphs (c)(5), (c)(7), or (c)(10) of this section.

(4) If no person in Tier 1 has notified EPA of its intent to conduct one or more of the tests required by this section on any chemical substance listed in Table 2 in paragraph (j) of this section on or before March 9, 2011, EPA will publish a FEDERAL REGISTER document that would specify the test(s) and

the chemical substance(s) for which no letter of intent has been submitted and notify manufacturers in Tier 2A of their obligation to submit a letter of intent to test or to apply for an exemption from testing.

(5) If you are in Tier 2A (as specified in Table 1 in paragraph (c) of this section) with respect to a chemical substance listed in Table 2 in paragraph (j) of this section, and if you manufacture, or intend to manufacture, this chemical substance as of February 7, 2011, or within 30 days after publication of the FEDERAL REGISTER document described in paragraph (c)(4) of this section, you must, for each test specified for that chemical substance in the document described in paragraph (c)(4) of this section, either submit to EPA a letter of intent to test or apply to EPA for an exemption from testing. The letter of intent to test or the exemption application must be received by EPA no later than 30 days after publication of the document described in paragraph (c)(4) of this section.

(6) If no manufacturer in Tier 1 or Tier 2A has notified EPA of its intent to conduct one or more of the tests required by this section on any chemical substance listed in Table 2 in paragraph (j) of this section within 30 days after the publication of the FEDERAL REGISTER document described in paragraph (c)(4) of this section, EPA will publish another FEDERAL REGISTER document that would specify the test(s) and the chemical substance(s) for which no letter of intent has been submitted, and notify processors in Tier 2B of their obligation to submit a letter of intent to test or to apply for an exemption from testing.

(7) If you are in Tier 2B (as specified in Table 1 in paragraph (c) of this section) with respect to a chemical substance listed in Table 2 in paragraph (j) of this section, and if you process, or intend to process, this chemical substance as of February 7, 2011, or within 30 days after publication of the FEDERAL REGISTER document described in paragraph (c)(6) of this section, you must, for each test specified for that chemical substance in the document described in paragraph (c)(6) of this section, either submit to EPA a letter of intent to test or apply to EPA for an exemption from testing. The letter of intent to test or the exemption application must be received by EPA no later than 30 days after publication of the document described in paragraph (c)(6) of this section.

(8) If no manufacturer or processor has notified EPA of its intent to conduct one or more of the tests required by this section for any of the chemical substances listed in Table 2 in paragraph (j) of this section within 30 days after the publication of the FEDERAL REGISTER document described in paragraph (c)(6) of this section, EPA will notify all manufacturers and processors of those chemical substances of this fact by certified letter or by publishing a FEDERAL REGISTER document specifying the test(s) for which no letter of intent has been submitted. This letter or FEDERAL REGISTER document will additionally notify all manufacturers and processors that all exemption applications concerning the test(s) have been denied, and will give the manufacturers and processors of the chemical substance(s) an opportunity to take corrective action.

(9) If no manufacturer or processor has notified EPA of its intent to conduct one or more of the tests required by this section for any of the chemical substances listed in Table 2 in paragraph (j) of this section within 30 days after receipt of the certified letter or publication of the FEDERAL REGISTER document described in paragraph (c)(8) of this section, all manufacturers and processors subject to this section with respect to that chemical substance who are not already in violation of this section will be in violation of this section.

(10) If a problem occurs with the initiation, conduct, or completion of the required testing or the submission of the required data with respect to a chemical substance listed in Table 2 in paragraph (j) of this section, under the procedures in 40 CFR 790.93 and 790.97, EPA may initiate termination proceedings for all testing exemptions with respect to that chemical substance and may notify persons in Tier 1 and Tier 2 that they are required to submit letters of intent to test or exemption applications within a specified period of time.

(11) If you are required to comply with this section, but your manufacture or processing of, or intent to manufacture or process, a chemical substance listed in Table 2 in paragraph (j) of this section begins after the applicable compliance date referred to in paragraphs (c)(2), (c)(5), or (c)(6) of this section, you must either submit a letter of intent to test or apply to EPA for an exemption. The letter of intent to test or the exemption application must be received by EPA no later than the day you begin manufacture or processing.

(d) *What must I do to comply with this section?* (1) To comply with this section you must either submit to EPA a letter of intent to test, or apply to and obtain from EPA an exemption from testing.

(2) For each test with respect to which you submit to EPA a letter of intent to test, you must conduct the testing specified in paragraph (h) of this section and submit the test data to EPA.

(3) You must also comply with the procedures governing test rule requirements in 40 CFR part 790 (except for those requirements listed in this paragraph as not applicable to this section), including the submission of letters of intent to test or exemption applications, the conduct of testing, and the submission of data; 40 CFR Part 792—Good Laboratory Practice Standards; and this section. The following provisions of 40 CFR part 790 do not apply to this section: Paragraphs (a), (d), (e), and (f) of § 790.45; paragraph (a)(2) and paragraph (b) of § 790.80; § 790.82(e)(1); § 790.85; and § 790.48.

(e) *If I do not comply with this section, when will I be considered in violation of it?* You will be considered in violation of this section as of 1 day after the date by which you are required to comply with this section.

(f) *How are EPA's data reimbursement procedures affected for purposes of this section?* If persons subject to this section are unable to agree on the amount or method of reimbursement for test data development for one or more chemical substances included in this section, any person may request a hearing as described in 40 CFR part 791. In the determination of fair reimbursement shares under this section, if the hearing officer chooses to use a formula based on production volume, the total production volume amount will include amounts of a chemical substance produced as an impurity.

(g) *Who must comply with the export notification requirements?* Any person who exports, or intends to export, a chemical substance listed in Table 2 in paragraph (j) of this section is subject to 40 CFR part 707, subpart D.

(h) *How must I conduct my testing?* (1) The tests that are required for each chemical substance are indicated in Table 2 in paragraph (j) of this section. The test methods that must be followed are provided in Table 3 in paragraph (j) of this section. You must proceed in accordance with these test methods as required according to Table 3 in paragraph (j) of this section, or as appropriate if more than one alternative is allowed according to Table 3 in paragraph (j) of this section. Included in Table 3 in paragraph (j) of this section are the following 18 test methods which are incorporated by reference:

(i) Standard Test Method for Relative Initial and Final Melting Points and the Melting Range of Organic Chemicals, ASTM E 324–99, approved September 10, 1999.

(ii) Standard Test Method for Partition Coefficient (*N*-Octanol/Water) Estimation by Liquid Chromatography, ASTM E 1147–92 (Reapproved 2005), approved August 1, 2005.

(iii) Standard Guide for Conducting Acute Toxicity Tests on Test Materials with Fishes, Macroinvertebrates, and Amphibians, ASTM E 729–96 (Reapproved 2007), approved October 1, 2007.

(iv) Standard Test Method for Measurements of Aqueous Solubility, ASTM E 1148–02 (Reapproved 2008), approved February 1, 2008.

(v) Standard Test Method for Estimating Acute Oral Toxicity in Rats, ASTM E 1163–98 (Reapproved 2002), approved October 10, 2002.

(vi) Standard Guide for Conducting Daphnia Magna Life-Cycle Toxicity Tests, ASTM E 1193–97 (Reapproved 2004), approved April 1, 2004.

(vii) Standard Guide for Conducting Static Toxicity Tests with Microalgae, ASTM E 1218–04^{e1}, approved April 1, 2004.

(viii) Standard Test Method for Vapor Pressure of Liquids by Ebulliometry, ASTM E 1719–05, approved March 1, 2005.

(ix) Standard Test Method for Determining Ready, Ultimate, Biodegradability of Organic Chemicals in a Sealed Vessel CO_2 Production Test. ASTM E 1720–01 (Reapproved 2008), approved February 1, 2008.

(x) Standard Test Method for Determining Vapor Pressure by Thermal Analysis, ASTM E 1782–08, approved March 1, 2008.

(xi) Water Quality—Evaluation of Ultimate Aerobic Biodegradability of Organic Compounds in Aqueous Medium—Method by Analysis of Inorganic Carbon in Sealed Vessels (CO_2 Headspace Test). First Edition, March 15, 1999. ISO 14593:1999(E).

(xii) Water Quality—Evaluation in an Aqueous Medium of the ''Ultimate'' Aerobic Biodegradability of Organic Compounds—Method by Analysis of Dissolved Organic Carbon (DOC). Second Edition, September 15, 1994. ISO 7827:1994(E).

(xiii) Water Quality—Evaluation of Ultimate Aerobic Biodegradability of Organic Compounds in Aqueous Medium by Determination of Oxygen Demand in a Closed Respirometer. Second Edition, August 1, 1999. ISO 9408:1999(E).

(xiv) Water Quality—Evaluation of Ultimate Aerobic Biodegradability of Organic Compounds in Aqueous Medium—Carbon Dioxide Evolution Test. Second Edition, March 1, 1999. ISO 9439:1999(E).

(xv) Water Quality—Evaluation in an Aqueous Medium of The ''Ultimate'' Aerobic Biodegradability of Organic Compounds—Method by Analysis of Biochemical Oxygen Demand (Closed Bottle Test). First Edition, October 15, 1994. ISO 10707:1994(E).

(xvi) Water Quality—Evaluation in an Aqueous Medium of the Ultimate Aerobic Biodegradability of Organic Compounds—Determination of Biochemical Oxygen Demand in a Two-Phase Closed Bottle Test. First Edition, February 1, 1997. ISO 10708:1997(E).

(xvii) Water Quality—Guidance for the Preparation and Treatment of Poorly Water-Soluble Organic Compounds for the Subsequent Evaluation of Their Biodegradability in an Aqueous Medium. First Edition, August 15, 1995. ISO 10634:1995(E).

(xviii) Guideline for the Testing of Chemicals: Melting Point/Melting Range. OECD 102. July 27, 1995.

(2) The Director of the Federal Register approved this incorporation by reference in accordance with 5 U.S.C. 552(a) and 1 CFR part 51. You may obtain copies of the ASTM test methods from the American Society for Testing and Materials, 100 Bar Harbor Dr., P.O. Box C700, West Conshohocken, PA 19428–2959, telephone number: (610) 832–9585, web address: *http://www.astm.org;* copies of the ISO test methods from the International Organization for Standardization, 1, ch. de la Voie-Creuse, Case postale, 56 CH–1211 Geneve 20 Switzerland, telephone number: +41 22 749 01 11, web address: *http://www.iso.org;* and a copy of the OECD guideline from the Organization for Economic Cooperation and Development, 2, rue André Pascal,75775 Paris Cedex 16 France, telephone number: +33 1 45 24 82 00, web address: *http://www.oecd.org*. You may inspect each test method and guideline at the EPA Docket Center, EPA West, Rm. B102, 1301 Constitution Ave., NW., Washington, DC 20004, telephone number: (202) 566–1744, or at the National Archives and Records Administration (NARA). For information on the availability of this material at NARA, call (202) 741–6030, or go to: *http://www.archives.gov/federal-register/cfr/ibr-locations.html*.

(i) *Reporting requirements*. A final report for each specific test for each subject chemical substance must be received by EPA by March 7, 2012, unless an extension is granted in writing pursuant to 40 CFR 790.55. A robust summary of the final report for each specific test should be submitted in addition to and at the same time as the final report. The term ''robust summary'' is used to describe the technical information necessary to adequately describe an experiment or study and includes the objectives, methods, results, and conclusions of the full study report which can be either an experiment or

in some cases an estimation or prediction method. Guidance for the compilation of robust summaries is described in a document entitled ''Draft Guidance on Developing Robust Summaries'' which is available on-line: *http://www.epa.gov/chemrtk/pubs/general/robsumgd.htm*.

(j) *Designation of specific chemical substances and testing requirements*. The chemical substances identified by chemical name, Chemical Abstract Service Registry Number (CASRN), and class in Table 2 of this paragraph must be tested in accordance with the requirements designated in Tables 2 and 3 of this paragraph, and the requirements described in 40 CFR part 792—Good Laboratory Practice Standards:

TABLE 2—CHEMICAL SUBSTANCES AND TESTING REQUIREMENTS

CASRN	Chemical name	Class	Required tests/(See table 3 of this section)
75–07–0	Acetaldehyde	1	C2, F2.
78–11–5	1,3-Propanediol, 2,2-bis[(nitrooxy)methyl]-, dinitrate (ester).	1	C4.
84–65–1	9,10-Anthracenedione	1	C6.
89–32–7	1H,3H-Benzo[1,2-c:4,5-c′]difuran-1,3,5,7-tetrone.	1	A3, A4, A5, B, C1, D, E1, F1.
110–44–1	2,4-Hexadienoic acid, (E,E)-	1	C6.
118–82–1	Phenol, 4,4′-methylenebis[2,6-bis(1,1-dimethylethyl)-.	1	C1.
119–61–9	Methanone, diphenyl-	1	B, C2.
144–62–7	Ethanedioic acid	1	A1, A2, A3, A5, B, C1, E2.
149–44–0	Methanesulfinic acid, hydroxy-, monosodium salt	1	E1.
2524–04–1	Phosphorochloridothioic acid, O,O-diethyl ester.	1	A1, A2, A3, A4, A5, B, C1, E1, E2, F2.
4719–04–4	1,3,5-Triazine-1,3,5(2H,4H,6H)-triethanol	1	C6.
6381–77–7	D-erythro-hex-2-enonic acid, gamma.-lactone, monosodium salt.	1	A4, B, C1.
31138–65–5	D-gluco-heptonic acid, monosodium salt, (2.xi.)-.	1	A1, A2, A4, A5, B, C1, D, E1, E2, F1.
66241–11–0	C.I. Leuco Sulphur Black 1	2	A1, A2, A3, A4, A5, B, C1, D, E1, E2, F1.
68187–76–8	Castor oil, sulfated, sodium salt	2	A1, A2, C1, D, E1, E2, F1.
68187–84–8	Castor oil, oxidized	2	A1, A2, B, E1, E2, F1.
68479–98–1	Benzenediamine, ar,ar-diethyl-ar-methyl-	1	A1, A3, A4, A5, C1, E1, E2, F1.
68527–02–6	Alkenes, C_{12-24}, chloro	2	A1, A2, A3, A4, A5, B, C1, E2, F2.
68647–60–9	Hydrocarbons, C >4	2	A2, A3, A5, B, C1, D, E1, E2, F1.

Note: CASRN = Chemical Abstract Service Registry Number.

TABLE 3—KEY TO THE TEST REQUIREMENTS DENOTED BY ALPHANUMERIC SYMBOLS IN TABLE 2 OF THIS PARAGRAPH

[Note: The ASTM and ISO test methods and the OECD guideline required in this paragraph are incorporated by reference; see paragraph (h) of this section.]

Testing category	Test symbol	Test requirements and references	Special conditions
Physical/chemical properties.	A	1. Melting Point: American Society for Testing and Materials (ASTM) E 324–99 (capillary tube), if a Freezing Point: Organization for Economic Cooperation and Development (OECD) 102 (melting point/melting range). 2. Boiling Point: ASTM E 1719–05 (ebulliometry). 3. Vapor Pressure: ASTM E 1782–08 (thermal analysis). 4. n-Octanol/Water Partition Coefficient (log 10 basis) or log K_{OW}: (See Special Conditions for the log K_{OW} test requirement and select the appropriate method to use, if any, from those listed in this column.). Method A: 40 CFR 799.6755 (shake flask). Method B: ASTM E 1147–92 (Reapproved 2005) (liquid chromatography). Method C: 40 CFR 799.6756 (generator column). 5. Water Solubility: (See Special Conditions for the water solubility test requirement and select the appropriate method to use, if any, from those listed in this column.). Method A: ASTM E 1148–02 (Reapproved 2008) (shake flask). Method B: 40 CFR 799.6784 (shake flask). Method C: 40 CFR 799.6784 (column elution). Method D: 40 CFR 799.6786 (generator column).	n-Octanol/water Partition Coefficient (log 10 basis) or log K_{OW}: Which method is required, if any, is determined by the test substance's estimated[i] log K_{OW} as follows: log K_{OW} <0: No testing required. log K_{OW} range 0–1: Method A or B. log K_{OW} range >1–4: Method A, B, or C. log K_{OW} range >4–6: Method B or C. log K_{OW} >6: Method C. Test sponsors must provide in the final study report the underlying rationale for the method and pH selected. In order to ensure environmental relevance, EPA highly recommends that the selected study be conducted at pH 7. Water Solubility: Which method is required, if any, is determined by the test substance's estimated[ii] water solubility. Test sponsors must provide in the final study report the underlying rationale for the method and pH selected. In order to ensure environmental relevance, EPA highly recommends that the selected study be conducted starting at pH 7. >5,000 milligram/Liter (mg/L): Method A or B. >10 mg/L–5,000 mg/L: Method A, B, C, or D. >0.001 mg/L–10 mg/L: Method C or D. ≤0.001 mg/L: No testing required.≤
Environmental fate and pathways—ready biodegradation.	B	For B, consult International Organization for Standardization (ISO) 10634:1995(E) for guidance, and choose one of the methods listed in this column:. 1. ASTM E 1720–01 (Reapproved 2008) (sealed vessel CO_2 production test) OR. 2. ISO 14593:1999(E) (CO_2 headspace test) OR. 3. ISO 7827:1994(E) (analysis of DOC) OR 4. ISO 9408:1999(E) (determination of oxygen demand in a closed respirometer) OR. 5. ISO 9439:1999(E) (CO_2 evolution test) OR. 6. ISO 10707:1994(E) (closed bottle test) OR. 7. ISO 10708:1997(E) (two-phase closed bottle test).	Which method is required, if any, is determined by the test substance's physical and chemical properties, including its water solubility. ISO 10634:1995(E) provides guidance for selection of an appropriate test method for a given test substance. Test sponsors must provide in the final study report the underlying rationale for the method selected.

TABLE 3—KEY TO THE TEST REQUIREMENTS DENOTED BY ALPHANUMERIC SYMBOLS IN TABLE 2 OF THIS PARAGRAPH—Continued

[Note: The ASTM and ISO test methods and the OECD guideline required in this paragraph are incorporated by reference; see paragraph (h) of this section.]

Testing category	Test symbol	Test requirements and references	Special conditions
Aquatic toxicity	C1	For C1, Test Group 1 or Test Group 2 listed in this column must be used to fulfill the testing requirements—See Special Conditions.. Test Group 1 for C1: ..... 1. Acute Toxicity to Fish: ASTM E 729–96 (Reapproved 2007). 2. Acute Toxicity to Daphnia: ASTM E 729–96 (Reapproved 2007). 3. Toxicity to Plants (Algae): ASTM E 1218–04 ^{e1}. Test Group 2 for C1: ..... 1. Chronic Toxicity to Daphnia: ASTM E 1193–97 (Reapproved 2004). 2. Toxicity to Plants (Algae): ASTM E 1218—04 ^{e1}.	The following are the special conditions for C1, C2, C3, C4, C5, and C7 testing; there are no special conditions for C6. Which test group is required is determined by the test substance's measured log K_{OW} as obtained under Test Category A, or using an existing measured log K_{OW}.[iii] If log K_{OW} <4.2: Test Group 1 is required. If log $K_{OW} \geq 4.2$: Test Group 2 is required
	C2	For C2, Test Group 1 or Test Group 2 listed in this column must be used to fulfill the testing requirements—See Special Conditions.. Test Group 1 for C2:. 1. Acute Toxicity to Daphnia: ASTM E 729–96 (Reapproved 2007). 2. Toxicity to Plants (Algae): ASTM E 1218–04 ^{e1}. Test Group 2 for C2:. 1. Chronic Toxicity to Daphnia: ASTM E 1193–97 (Reapproved 2004). 2. Toxicity to Plants (Algae): ASTM E 1218–04 ^{e1}.	
	C3	For C3, Test Group 1 or Test Group 2 listed in this column must be used to fulfill the testing requirements—See Special Conditions.. Test Group 1 for C3:. 1. Acute Toxicity to Fish: ASTM E 729–96 (Reapproved 2007). 2. Toxicity to Plants (Algae): ASTM E 1218–04 ^{e1}. Test Group 2 for C3:. 1. Chronic Toxicity to Daphnia: ASTM E 1193–97 (Reapproved 2004). 2. Toxicity to Plants (Algae): ASTM E 1218–04 ^{e1}.	
	C4	For C4, Test Group 1 or Test Group 2 listed in this column must be used to fulfill the testing requirements—See Special Conditions.. Test Group 1 for C4:. 1. Acute Toxicity to Fish: ASTM E 729–96 (Reapproved 2007). 2. Acute Toxicity to Daphnia: ASTM E 729–96 (Reapproved 2007). Test Group 2 for C4:. 1. Chronic Toxicity to Daphnia: ASTM E 1193–97 (Reapproved 2004).	
	C5	For C5, Test Group 1 or Test Group 2 listed in this column must be used to fulfill the testing requirements—See Special Conditions.. Test Group 1 for C5:. 1. Acute Toxicity to Daphnia: ASTM E 729–96 (Reapproved 2007). Test Group 2 for C5:. 1. Chronic Toxicity to Daphnia: ASTM E 1193–97 (Reapproved 2004).	
	C6	Toxicity to Plants (Algae): ASTM E 1218–04 ^{e1}.	

TABLE 3—KEY TO THE TEST REQUIREMENTS DENOTED BY ALPHANUMERIC SYMBOLS IN TABLE 2 OF THIS PARAGRAPH—Continued

[Note: The ASTM and ISO test methods and the OECD guideline required in this paragraph are incorporated by reference; see paragraph (h) of this section.]

Testing category	Test symbol	Test requirements and references	Special conditions
.....	C7	For C7, Test Group 1 or Test Group 2 listed in this column must be used to fulfill the testing requirements—See Special Conditions.. Test Group 1 for C7:. 1. Acute Toxicity to Fish: ASTM E 729–96 (Reapproved 2007). Test Group 2 for C7:. 1. Chronic Toxicity to Daphnia: ASTM E 1193–97 (Reapproved 2004).	
Mammalian toxicity—acute.	D	See special conditions for this test requirement and select the method that must be used from those listed in this column.. Method A: Acute Inhalation Toxicity (rat): 40 CFR 799.9130. Method B: EITHER: ..... 1. Acute (Up/Down) Oral Toxicity (rat): ASTM E 1163–98 (Reapproved 2002). OR ..... 2. Acute (Up/Down) Oral Toxicity (rat): 40 CFR 799.9110(d)(1)(i)(A).	Which testing method is required is determined by the test substance's physical state at room temperature (25 °C). For those test substances that are gases at room temperature, Method A is required; otherwise, use either of the two methods listed under Method B. In Method B, 40 CFR 799.9110(d)(1)(i)(A) refers to the OECD 425 Up/Down Procedure.[iv] Estimating starting dose for Method B: Data from the neutral red uptake basal cytotoxicity assay[v] using normal human keratinocytes or mouse BALB/c 3T3 cells may be used to estimate the starting dose.
Mammalian toxicity—genotoxicity.	E1	Bacterial Reverse Mutation Test (in vitro): 40 CFR 799.9510.	None
	E2	Conduct any one of the following three tests for chromosomal damage: In vitro Mammalian Chromosome Aberration Test: 40 CFR 799.9537. OR ..... Mammalian Bone Marrow Chromosomal Aberration Test (in vivo in rodents: mouse (preferred species), rat, or Chinese hamster): 40 CFR 799.9538. OR ..... Mammalian Erythrocyte Micronucleus Test [sampled in bone marrow] (in vivo in rodents: Mouse (preferred species), rat, or Chinese hamster): 40 CFR 799.9539.	Persons required to conduct testing for chromosomal damage are encouraged to use the in vitro Mammalian Chromosome Aberration Test (40 CFR 799.9537) to generate the needed data unless known chemical properties (e.g., physical/chemical properties, chemical class characteristics) preclude its use. A subject person who uses one of the in vivo methods instead of the in vitro method to address a chromosomal damage test requirement must submit to EPA a rationale for conducting that alternate test in the final study report.
Mammalian toxicity—repeated dose/reproduction/developmental.	F1	Combined Repeated Dose Toxicity Study with the Reproduction/Developmental Toxicity Screening Test: 40 CFR 799.9365. OR ..... Reproduction/Developmental Toxicity Screening Test: 40 CFR 799.9355. AND ..... Repeated Dose 28–Day Oral Toxicity Study in rodents: 40 CFR 799.9305.	Where F1 is required, EPA recommends use of the Combined Repeated Dose Toxicity Study with the Reproduction/Developmental Toxicity Screening Test (40 CFR 799.9365). However, there may be valid reasons to test a particular chemical using both 40 CFR 799.9355 and 40 CFR 799.9305 to fill Mammalian Toxicity—Repeated Dose/Reproduction/Developmental data needs. A subject person who uses the combination of 40 CFR 799.9355 and 40 CFR 799.9305 in place of 40 CFR 799.9365 must submit to EPA a rationale for conducting these alternate tests in the final study reports. Where F2 or F3 is required, no rationale for conducting the required test need be provided in the final study report.
	F2	Reproduction/Developmental Toxicity Screening Test: 40 CFR 799.9355.	

TABLE 3—KEY TO THE TEST REQUIREMENTS DENOTED BY ALPHANUMERIC SYMBOLS IN TABLE 2 OF THIS PARAGRAPH—Continued

[Note: The ASTM and ISO test methods and the OECD guideline required in this paragraph are incorporated by reference; see paragraph (h) of this section.]

Testing category	Test symbol	Test requirements and references	Special conditions
	F3	Repeated Dose 28–Day Oral Toxicity Study in rodents: 40 CFR 799.9305.	

[i] EPA recommends, but does not require, that log K_{OW} be quantitatively estimated prior to initiating this study. One method, among many similar methods, for estimating log K_{OW} is described in the article entitled ''Atom/Fragment Contribution Method for Estimating Octanol-Water Partition Coefficients'' by W.M. Meylan and P.H. Howard in the Journal of Pharmaceutical Sciences. 84(1):83–92. January 1992. This reference is available in docket ID number EPA–HQ–OPPT–2007–0531 at the EPA Docket Center, Rm. 3334, EPA West Bldg., 1301 Constitution Ave., NW., Washington, DC 20004, telephone number: (202) 566–1744, from 8:30 a.m. to 4:30 p.m., Monday through Friday, excluding legal holidays.

[ii] EPA recommends, but does not require, that water solubility be quantitatively estimated prior to initiating this study. One method, among many similar methods, for estimating water solubility is described in the article entitled ''Improved Method for Estimating Water Solubility From Octanol/Water Partition Coefficient'' by W.M. Meylan, P.H. Howard, and R.S. Boethling in Environmental Toxicology and Chemistry. 15(2):100–106. 1996. This reference is available in docket ID number EPA–HQ–OPPT–2007–0531 at the EPA Docket Center, Rm. 3334, EPA West Bldg., 1301 Constitution Ave., NW., Washington, DC 20004, telephone number: (202) 566–1744, from 8:30 a.m. to 4:30 p.m., Monday through Friday, excluding legal holidays.

[iii] Chemical substances that are dispersible in water may have log K_{OW} values greater than 4.2 and may still be acutely toxic to aquatic organisms. Test sponsors who wish to conduct Test Group 1 studies on such chemicals may request a modification to the test standard as described in 40 CFR 790.55. Based upon the supporting rationale provided by the test sponsor, EPA may allow an alternative threshold or method be used for determining whether acute or chronic aquatic toxicity testing be performed for a specific substance.

[iv] The OECD 425 Up/Down Procedure, revised by OECD in December 2001, is available in docket ID number EPA–HQ–OPPT–2007–0531 at the EPA Docket Center, Rm. 3334, EPA West Bldg., 1301 Constitution Ave., NW., Washington, DC 20004, telephone number: (202) 566–1744, from 8:30 a.m. to 4:30 p.m., Monday through Friday, excluding legal holidays.

[v] The neutral red uptake basal cytotoxicity assay, which may be used to estimate the starting dose for the mammalian toxicity-acute endpoint, is available in docket ID number EPA–HQ–OPPT–2007–0531 at the EPA Docket Center, Rm. 3334, EPA West Bldg., 1301 Constitution Ave., NW., Washington, DC 20004, telephone number: (202) 566–1744, from 8:30 a.m. to 4:30 p.m., Monday through Friday, excluding legal holidays.

[76 FR 1087, Jan. 7, 2011, as amended at 76 FR 4550, Jan. 26, 2011]

§ 799.5089 Chemical testing requirements for third group of high production volume chemicals (HPV3).

(a) *What substances will be tested under this section?* Table 2 in paragraph (j) of this section identifies the chemical substances that must be tested under this section. For the chemical substances identified as ''Class 1'' chemical substances in Table 2 in paragraph (j) of this section, the purity of each chemical substance must be 99% or greater, unless otherwise specified in this section. For the chemical substances identified as ''Class 2'' chemical substances in Table 2 in paragraph (j), a representative form of each chemical substance must be tested. The representative form selected for a given Class 2 chemical substance should meet industry or consensus standards where they exist.

(b) *Am I subject to this section?* (1) If you manufacture (including import) or intend to manufacture, or process or intend to process, any chemical substance listed in Table 2 in paragraph (j) of this section at any time from November 21, 2011 to the end of the test data reimbursement period as defined in 40 CFR 791.3(h), you are subject to this section with respect to that chemical substance.

(2) If you do not know or cannot reasonably ascertain that you manufacture or process a chemical substance listed in Table 2 in paragraph (j) of this section during the time period described in paragraph (b)(1) of this section (based on all information in your possession or control, as well as all information that a reasonable person similarly situated might be expected to possess, control, or know, or could obtain without unreasonable burden), you are not subject to this section with respect to that chemical substance.

(c) *If I am subject to this section, when must I comply with it?* (1)(i) Persons subject to this section are divided into two groups, as set forth in Table 1 of this paragraph: Tier 1 (persons initially required to comply) and Tier 2 (persons not initially required to comply). If you are subject to this section, you must determine if you fall within Tier 1 or Tier 2, based on Table 1 of this paragraph.

TABLE 1—PERSONS SUBJECT TO THE RULE: PERSONS IN TIER 1 AND TIER 2

Persons initially required to comply with this section (Tier 1)	Persons not initially required to comply with this section (Tier 2)
Persons not otherwise specified in column 2 of this table that manufacture (as defined at TSCA section 3(7)) or intend to manufacture a chemical substance included in this section.	A. Persons who manufacture (as defined at TSCA section 3(7)) or intend to manufacture a chemical substance included in this section solely as one or more of the following: —As a byproduct (as defined at 40 CFR 791.3(c)); — As an impurity (as defined at 40 CFR 790.3); —As a naturally occurring substance (as defined at 40 CFR 710.4(b)); —As a non-isolated intermediate (as defined at 40 CFR 704.3); —As a component of a Class 2 substance (as described at 40 CFR 720.45(a)(1)(i)); —In amounts of less than 500 kg (1,100 lb) annually (as described at 40 CFR 790.42(a)(4)); or —For research and development (as described at 40 CFR 790.42(a)(5)). B. Persons who process (as defined at TSCA section 3(10)) or intend to process a chemical substance included in this section (see 40 CFR 790.42(a)(2)).

Note: kgs—kilograms, TSCA—Toxic Substances Control Act.

(ii) Table 1 of paragraph (c)(1)(i) of this section expands the list of persons in Tier 2, that is those persons specified in 40 CFR 790.42(a)(2), (a)(4), and (a)(5), who, while legally subject to this section, must comply with the requirements of this section only if directed to do so by EPA under the circumstances set forth in paragraphs (c)(4), (c)(5), (c)(6), (c)(7), and (c)(10) of this section.

(2) If you are in Tier 1 with respect to a chemical substance listed in Table 2 in paragraph (j) of this section, you must, for each test required under this section for that chemical substance, either submit to EPA a letter-of-intent-to-test or apply to EPA for an exemption from testing. The letter-of-intent-to-test or the exemption application must be received by EPA no later than December 20, 2011.

(3) If you are in Tier 2 with respect to a chemical substance listed in Table 2 in paragraph (j) of this section, you are considered to have an automatic conditional exemption and you will be required to comply with this section with regard to that chemical substance only if directed to do so by EPA under paragraphs (c)(5), (c)(7), or (c)(10) of this section.

(4) If no person in Tier 1 has notified EPA of its intent to conduct one or more of the tests required by this section on any chemical substance listed in Table 2 in paragraph (j) of this section on or before December 20, 2011, EPA will publish a FEDERAL REGISTER document that would specify the test(s) and the chemical substance(s) for which no letter-of-intent has been submitted and notify manufacturers in Tier 2A of their obligation to submit a letter-of-intent-to-test or to apply for an exemption from testing.

(5) If you are in Tier 2A (as specified in Table 1 in paragraph (c) of this section) with respect to a chemical substance listed in Table 2 in paragraph (j) of this section, and if you manufacture, or intend to manufacture, this chemical substance as of November 21, 2011, or within 30 days after publication of the FEDERAL REGISTER document described in paragraph (c)(4) of this section, you must, for each test specified for that chemical substance in the document described in paragraph (c)(4) of this section, either submit to EPA a letter-of-intent-to-test or apply to EPA for an exemption from testing. The letter-of-intent-to-test or the exemption application must be received by EPA no later than 30 days after publication of the document described in paragraph (c)(4) of this section.

(6) If no manufacturer in Tier 1 or Tier 2A has notified EPA of its intent to conduct one or more of the tests required by this section on any chemical substance listed in Table 2 in paragraph (j) of this section within 30 days after the publication of the FEDERAL REGISTER document described in paragraph (c)(4) of this section, EPA will publish another FEDERAL REGISTER

document that would specify the test(s) and the chemical substance(s) for which no letter-of-intent has been submitted, and notify processors in Tier 2B of their obligation to submit a letter-of-intent-to-test or to apply for an exemption from testing.

(7) If you are in Tier 2B (as specified in Table 1 in paragraph (c) of this section) with respect to a chemical substance listed in Table 2 in paragraph (j) of this section, and if you process, or intend to process, this chemical substance as of November 21, 2011, or within 30 days after publication of the FEDERAL REGISTER document described in paragraph (c)(6) of this section, you must, for each test specified for that chemical substance in the document described in paragraph (c)(6) of this section, either submit to EPA a letter-of-intent-to-test or apply to EPA for an exemption from testing. The letter-of-intent-to-test or the exemption application must be received by EPA no later than 30 days after publication of the document described in paragraph (c)(6) of this section.

(8) If no manufacturer or processor has notified EPA of its intent to conduct one or more of the tests required by this section for any of the chemical substances listed in Table 2 in paragraph (j) of this section within 30 days after the publication of the FEDERAL REGISTER document described in paragraph (c)(6) of this section, EPA will notify all manufacturers and processors of those chemical substances of this fact by certified letter or by publishing a FEDERAL REGISTER document specifying the test(s) for which no letter-of-intent has been submitted. This letter or FEDERAL REGISTER document will additionally notify all manufacturers and processors that all exemption applications concerning the test(s) have been denied, and will give the manufacturers and processors of the chemical substance(s) an opportunity to take corrective action.

(9) If no manufacturer or processor has notified EPA of its intent to conduct one or more of the tests required by this section for any of the chemical substances listed in Table 2 in paragraph (j) of this section within 30 days after receipt of the certified letter or publication of the FEDERAL REGISTER document described in paragraph (c)(8) of this section, all manufacturers and processors subject to this section with respect to that chemical substance who are not already in violation of this section will be in violation of this section.

(10) If a problem occurs with the initiation, conduct, or completion of the required testing or the submission of the required data with respect to a chemical substance listed in Table 2 in paragraph (j) of this section, under the procedures in 40 CFR 790.93 and 790.97, EPA may initiate termination proceedings for all testing exemptions with respect to that chemical substance and may notify persons in Tier 1 and Tier 2 that they are required to submit letters-of-intent-to-test or exemption applications within a specified period of time.

(11) If you are required to comply with this section, but your manufacture or processing of, or intent to manufacture or process, a chemical substance listed in Table 2 in paragraph (j) of this section begins after the applicable compliance date referred to in paragraphs (c)(2), (c)(5), or (c)(6) of this section, you must either submit a letter-of- intent-to-test or apply to EPA for an exemption. The letter-of-intent-to-test or the exemption application must be received by EPA no later than the day you begin manufacture or processing.

(d) *What must I do to comply with this section?* (1) To comply with this section you must either submit to EPA a letter-of-intent-to-test, or apply to and obtain from EPA an exemption from testing.

(2) For each test with respect to which you submit to EPA a letter-of-intent-to- test, you must submit a study plan and conduct the testing specified in paragraph (h) of this section and submit the test data to EPA.

(3) You must also comply with the procedures governing test rule requirements in 40 CFR part 790 (except for those requirements listed in this paragraph as not applicable to this section), including the submission of letters-of-intent-to-test or exemption applications, submission of study plans, the conduct of testing, and the submission

of data; 40 CFR part 792—Good Laboratory Practice Standards; and this section. The following provisions of 40 CFR part 790 do not apply to this section: Paragraphs (a), (d), (e), and (f) of § 790.45; § 790.48; paragraphs (a)(2) and (b) of § 790.80; paragraph (e)(1) of § 790.82; and § 790.85.

(e) *If I do not comply with this section, when will I be considered in violation of it?* You will be considered in violation of this section as of 1 day after the date by which you are required to comply with this section.

(f) *How are EPA's data reimbursement procedures affected for purposes of this section?* If persons subject to this section are unable to agree on the amount or method of reimbursement for test data development for one or more chemical substances included in this section, any person may request a hearing as described in 40 CFR part 791. In the determination of fair reimbursement shares under this section, if the hearing officer chooses to use a formula based on production volume, the total production volume amount will include amounts of a chemical substance produced as an impurity.

(g) *Who must comply with the export notification requirements?* Any person who exports, or intends to export, a chemical substance listed in Table 2 in paragraph (j) of this section is subject to 40 CFR part 707, subpart D.

(h) *How must I conduct my testing?* (1) The tests that are required for each chemical substance are indicated in Table 2 in paragraph (j) of this section. The test methods that must be followed are provided in Table 3 in paragraph (j) of this section. You must proceed in accordance with these test methods as required according to Table 3 in paragraph (j) of this section, or as appropriate if more than one alternative is allowed according to Table 3 in paragraph (j) of this section. Included in Table 3 in paragraph (j) of this section are the following 18 test methods which are incorporated by reference:

(i) Standard Test Method for Relative Initial and Final Melting Points and the Melting Range of Organic Chemicals, ASTM E 324–99, approved September 10, 1999.

(ii) Standard Test Method for Partition Coefficient (*N*-Octanol/Water) Estimation by Liquid Chromatography, ASTM E 1147–92 (Reapproved 2005), approved August 1, 2005.

(iii) Standard Guide for Conducting Acute Toxicity Tests on Test Materials with Fishes, Macroinvertebrates, and Amphibians, ASTM E 729–96 (Reapproved 2007), approved October 1, 2007.

(iv) Standard Test Method for Measurements of Aqueous Solubility, ASTM E 1148–02 (Reapproved 2008), approved February 1, 2008.

(v) Standard Test Method for Estimating Acute Oral Toxicity in Rats, ASTM E 1163–98 (Reapproved 2002), approved October 10, 2002.

(vi) Standard Guide for Conducting *Daphnia magna* Life-Cycle Toxicity Tests, ASTM E 1193–97 (Reapproved 2004), approved April 1, 2004.

(vii) Standard Guide for Conducting Static Toxicity Tests with Microalgae, ASTM E 1218–04^{e1}, approved April 1, 2004.

(viii) Standard Test Method for Vapor Pressure of Liquids by Ebulliometry, ASTM E 1719–05, approved March 1, 2005.

(ix) Standard Test Method for Determining Ready, Ultimate, Biodegradability of Organic Chemicals in a Sealed Vessel CO_2 Production Test. ASTM E 1720–01 (Reapproved 2008), approved February 1, 2008.

(x) Standard Test Method for Determining Vapor Pressure by Thermal Analysis, ASTM E 1782–08, approved March 1, 2008.

(xi) Water Quality—Evaluation of Ultimate Aerobic Biodegradability of Organic Compounds in Aqueous Medium—Method by Analysis of Inorganic Carbon in Sealed Vessels (CO_2 Headspace Test). First Edition, March 15, 1999. ISO 14593:1999(E).

(xii) Water Quality—Evaluation in an Aqueous Medium of the ''Ultimate'' Aerobic Biodegradability of Organic Compounds—Method by Analysis of Dissolved Organic Carbon (DOC). Second Edition, September 15, 1994. ISO 7827:1994(E).

(xiii) Water Quality—Evaluation of Ultimate Aerobic Biodegradability of Organic Compounds in Aqueous Medium by Determination of Oxygen Demand in a Closed Respirometer. Second Edition, August 1, 1999. ISO 9408:1999(E).

(xiv) Water Quality—Evaluation of Ultimate Aerobic Biodegradability of Organic Compounds in Aqueous Medium—Carbon Dioxide Evolution Test. Second Edition, March 1, 1999. ISO 9439:1999(E).

(xv) Water Quality—Evaluation in an Aqueous Medium of The ''Ultimate'' Aerobic Biodegradability of Organic Compounds—Method by Analysis of Biochemical Oxygen Demand (Closed Bottle Test). First Edition, October 15, 1994. ISO 10707:1994(E).

(xvi) Water Quality—Evaluation in an Aqueous Medium of the Ultimate Aerobic Biodegradability of Organic Compounds—Determination of Biochemical Oxygen Demand in a Two-Phase Closed Bottle Test. First Edition, February 1, 1997. ISO 10708:1997(E).

(xvii) Water Quality—Guidance for the Preparation and Treatment of Poorly Water-Soluble Organic Compounds for the Subsequent Evaluation of Their Biodegradability in an Aqueous Medium. First Edition, August 15, 1995. ISO 10634:1995(E).

(xviii) Guideline for the Testing of Chemicals: Melting Point/Melting Range. OECD 102. July 27, 1995.

(2) The Director of the Federal Register approved this incorporation by reference in accordance with 5 U.S.C. 552(a) and 1 CFR part 51. You may obtain copies of the ASTM standards from ASTM International, 100 Bar Harbor Dr., P.O. Box C700, West Conshohocken, PA 19428–2959, *telephone number:* (610) 832–9585, *Web address: http://www.astm.org;* copies of the ISO standards from the International Organization for Standardization, 1, ch. de la Voie-Creuse, CP 56, CH–1211 Geneve 20, Switzerland, telephone number: +41–22–749–01–11, *Web address: http://www.iso.org;* and copies of the OECD guideline from the Organization for Economic Cooperation and Development, 2, rue André Pascal, 75775 Paris Cedex 16, France, telephone number: +33–1–45–24–82–00, *Web address: http://www.oecd.org*. You may inspect each standard and guideline at the EPA Docket Center (EPA/DC), Rm. 3334, EPA West Bldg., 1301 Constitution Ave., NW., Washington, DC, from 8:30 a.m. to 4:30 p.m., Monday through Friday, excluding legal holidays. The telephone number of the EPA/DC Public Reading Room is (202) 566–1744, and the telephone number for the OPPT Docket is (202) 566–0280. The materials are also available for inspection at the National Archives and Records Administration (NARA). For information on the availability of this material at NARA, call (202) 741–6030, or go to: *http://www.archives.gov/federal-register/cfr/ibr-locations.html*.

(i) *Reporting requirements*. A study plan for each specific test for each subject chemical substance must be received by EPA by February 20, 2012 unless an extension is granted in writing pursuant to 40 CFR 790.55. A final report for each specific test for each subject chemical substance must be received by EPA by December 21, 2012 unless an extension is granted in writing pursuant to 40 CFR 790.55. EPA is also requesting that a robust summary of the final report for each specific test be submitted in addition to, and at the same time as, the final report. The term ''robust summary'' is used to describe the technical information necessary to adequately describe an experiment or study and includes the objectives, methods, results, and conclusions of the full study report which can be either an experiment or in some cases an estimation or prediction method. Guidance for the compilation of robust summaries is described in a document entitled ''Draft Guidance on Developing Robust Summaries'' which is available online at *http://www.epa.gov/chemrtk/pubs/general/robsumgd.htm*.

(j) *Designation of specific chemical substances and testing requirements*. The chemical substances identified by chemical name, Chemical Abstract Service Registry Number (CASRN), and class in Table 2 of this paragraph must be tested in accordance with the requirements designated in Tables 2 and 3 of this paragraph, and the requirements described in 40 CFR Part 792—Good Laboratory Practice Standards:

TABLE 2—CHEMICAL SUBSTANCES AND TESTING REQUIREMENTS

CASRN	Chemical name	Class	Required tests (see Table 3 of this section)
98–09–9	Benzenesulfonyl chloride	1	C2, E1, E2, F1
98–56–6	Benzene, 1-chloro-4-(trifluoromethyl)-	1	B, C6
111–44–4	Ethane, 1,1′-oxybis[2-chloro-	1	C6, F1
127–68–4	Benzenesulfonic acid, 3-nitro-, sodium salt (1:1).	1	A3, F2
515–40–2	Benzene, (2-chloro-1,1-dimethylethyl)-	1	A1, A3, A4, A5, B, C1, D, E1, E2, F1
2494–89–5	Ethanol, 2-[(4-aminophenyl)sulfonyl]-, 1-(hydrogen sulfate).	1	A1, A2, A3, A4, A5, B, C1, D, E1, E2, F1
5026–74–4	2-Oxiranemethanamine, N-[4-(2-oxiranylmethoxy)phenyl]-N-(2-oxiranylmethyl)-	1	A1, A2, A3, A4, A5, B, C2, F1
22527–63–5	Propanoic acid, 2-methyl-, 3-(benzoyloxy)-2,2,4-trimethylpentyl ester.	1	A1, A2, A3, A4, A5, B, C1, D, E1, E2, F1

TABLE 2—CHEMICAL SUBSTANCES AND TESTING REQUIREMENTS—Continued

CASRN	Chemical name	Class	Required tests (see Table 3 of this section)
25321–41–9	Benzenesulfonic acid, dimethyl-	1	A2, A3, A4
52556–42–0	1-Propanesulfonic acid, 2-hydroxy-3-(2-propen-1-yloxy)-, sodium salt (1:1).	1	A1, A2, A3, A4, A5, B, C1, D, E1, E2, F1
68082–78–0	Lard, oil, Me esters	2	A1, A2, A3, A4, A5, B, C1, D, E1, E2, F1
68442–60–4	Acetaldehyde, reaction products with formaldehyde, by-products from	2	A1, A2, A3, A4, A5, B, C1, D, E1, E2, F1
68610–90–2	2-Butenedioic acid (2E)-, di-C8-18-alkyl esters.	2	A1, A2, A3, A4, A5, B, C1, D, E1, E2, F1
70693–50–4	Phenol, 2,4-bis(1-methyl-1-phenylethyl)-6-[2-(2-nitrophenyl)diazenyl]-.	1	A1, A2, A3, A4, A5, B, C1, D, E1, E2, F1
72162–15–3	1-Decene, sulfurized	2	A2, A3, A4, A5, B, C1, D, E1, E2, F1

TABLE 3—KEY TO THE TEST REQUIREMENTS DENOTED BY ALPHANUMERIC SYMBOLS IN TABLE 2 OF THIS PARAGRAPH

[**Note:** The ASTM and ISO test methods and the OECD guideline required in this paragraph are incorporated by reference; see paragraph (h) of this section]

Testing category	Test symbol	Test requirements and references	Special conditions
Physical/chemical properties.	A	1. Melting Point: ASTM International (ASTM) E 324–99 (capillary tube), if a Freezing Point: Organization for Economic Cooperation and Development (OECD) 102 (melting point/melting range). 2. Boiling Point: ASTM E 1719–05 (ebulliometry). 3. Vapor Pressure: ASTM E 1782–08 (thermal analysis). 4. *n*-Octanol/Water Partition Coefficient (log 10 basis) or log K_{ow}: (See Special Conditions for the log K_{ow} test requirement and select the appropriate method to use, if any, from those listed in this column.) Method A: 40 CFR 799.6755 (shake flask). Method B: ASTM E 1147–92 (Reapproved 2005) (liquid chromatography). Method C: 40 CFR 799.6756 (generator column). 5. Water Solubility: (See Special Conditions for the water solubility test requirement and select the appropriate method to use, if any, from those listed in this column.) Method A: ASTM E 1148–02 (Reapproved 2008) (shake flask). Method B: 40 CFR 799.6784 (shake flask). Method C: 40 CFR 799.6784 (column elution). Method D: 40 CFR 799.6786 (generator column).	*n*-Octanol/water Partition Coefficient (log 10 basis) or_log K_{ow}: Which method is required, if any, is determined by the test substance's estimated[i] log K_{ow} as follows: log K_{ow} <0: no testing required. log K_{ow} range 0–1: Method A or B. log K_{ow} range >1–4: Method A, B, or C. log K_{ow} range >4–6: Method B or C. log K_{ow} >6: Method C. Test sponsors must provide in the final study report the underlying rationale for the method and pH selected. In order to ensure environmental relevance, EPA highly recommends that the selected study be conducted at pH 7. Water Solubility: Which method is required, if any, is determined by the test substance's estimated[ii] water solubility. Test sponsors must provide in the final study report the underlying rationale for the method and pH selected. In order to ensure environmental relevance, EPA highly recommends that the selected study be conducted starting at pH 7. >5,000 milligram/Liter (mg/L): Method A or B. >10 mg/L–5,000 mg/L: Method A, B, C, or D. >0.001 mg/L–10 mg/L: Method C or D. ≤0.001 mg/L: No testing required.
Environmental fate and pathways—ready biodegradation.	B	For B, consult International Organization for Standardization (ISO) 10634:1995(E) for guidance, and choose one of the methods listed in this column: 1. ASTM E 1720–01 (Reapproved 2008) (sealed vessel CO_2 production test) OR. 2. ISO 14593:1999(E) (CO_2 headspace test) OR. 3. ISO 7827:1994(E) (analysis of DOC) OR. 4. ISO 9408:1999(E) (determination of oxygen demand in a closed respirometer) OR. 5. ISO 9439:1999(E) (CO_2 evolution test) OR. 6. ISO 10707:1994(E) (closed bottle test) OR. 7. ISO 10708:1997(E) (two-phase closed bottle test)..	Which method is required, if any, is determined by the test substance's physical and chemical properties, including its water solubility. ISO 10634:1995(E) provides guidance for selection of an appropriate test method for a given test substance. Test sponsors must provide in the final study report the underlying rationale for the method selected.

TABLE 3—KEY TO THE TEST REQUIREMENTS DENOTED BY ALPHANUMERIC SYMBOLS IN TABLE 2 OF THIS PARAGRAPH—Continued

[**Note:** The ASTM and ISO test methods and the OECD guideline required in this paragraph are incorporated by reference; see paragraph (h) of this section]

Testing category	Test symbol	Test requirements and references	Special conditions
Aquatic toxicity	C1	For C1, Test Group 1 or Test Group 2 listed in this column must be used to fulfill the testing requirements—See Special Conditions. *Test Group 1 for C1:* 1. Acute Toxicity to Fish: ASTM E 729–96 (Reapproved 2007). 2. Acute Toxicity to *Daphnia:* ASTM E 729–96 (Reapproved 2007). 3. Toxicity to Plants (Algae): ASTM E 1218–04 [e1] *Test Group 2 for C1:* 1. Chronic Toxicity to *Daphnia:* ASTM E 1193–97 (Reapproved 2004). 2. Toxicity to Plants (Algae): ASTM E 1218–04 [e1]	The following are the special conditions for C1, C2, C3, C4, C5, and C7 testing; there are no special conditions for C6. Which test group is required is determined by the test substance's measured log K_{ow} as obtained under Test Category A, or using an existing measured log K_{ow}.[iii] If log K_{ow} <4.2: Test Group 1 is required. If log $K_{ow} \geq 4.2$: Test Group 2 is required.
	C2	For C2, Test Group 1 or Test Group 2 listed in this column must be used to fulfill the testing requirements—See Special Conditions. *Test Group 1 for C2:* 1. Acute Toxicity to *Daphnia:* ASTM E 729–96 (Reapproved 2007). 2. Toxicity to Plants (Algae): ASTM E 1218–04 [e1] *Test Group 2 for C2:* 1. Chronic Toxicity to *Daphnia:* ASTM E 1193–97 (Reapproved 2004). 2. Toxicity to Plants (Algae): ASTM E 1218–04 [e1.]	
	C3	For C3, Test Group 1 or Test Group 2 listed in this column must be used to fulfill the testing requirements—See Special Conditions. *Test Group 1 for C3:* 1. Acute Toxicity to Fish: ASTM E 729–96 (Reapproved 2007).. 2. Toxicity to Plants (Algae): ASTM E 1218–04 [e1.]. *Test Group 2 for C3:* 1. Chronic Toxicity to *Daphnia:* ASTM E 1193–97 (Reapproved 2004).. 2. Toxicity to Plants (Algae): ASTM E 1218–04 [e1.]. For C4, Test Group 1 or Test Group 2 listed in this column must be used to fulfill the testing requirements—See Special Conditions. *Test Group 1 for C4:* 1. Acute Toxicity to Fish: ASTM E 729–96 (Reapproved 2007).. 2. Acute Toxicity to *Daphnia:* ASTM E 729–96 (Reapproved 2007).. *Test Group 2 for C4:* Chronic Toxicity to *Daphnia:* ASTM E 1193–97 (Reapproved 2004).	
	C5	For C5, Test Group 1 or Test Group 2 listed in this column must be used to fulfill the testing requirements—See Special Conditions. *Test Group 1 for C5:* Acute Toxicity to *Daphnia:* ASTM E 729–96 (Reapproved 2007). *Test Group 2 for C5:* Chronic Toxicity to *Daphnia:* ASTM E 1193–97 (Reapproved 2004).	

TABLE 3—KEY TO THE TEST REQUIREMENTS DENOTED BY ALPHANUMERIC SYMBOLS IN TABLE 2 OF THIS PARAGRAPH—Continued

[**Note:** The ASTM and ISO test methods and the OECD guideline required in this paragraph are incorporated by reference; see paragraph (h) of this section]

Testing category	Test symbol	Test requirements and references	Special conditions
	C6	Toxicity to Plants (Algae): ASTM E 1218–04 e1.	
	C7	For C7, Test Group 1 or Test Group 2 listed in this column must be used to fulfill the testing requirements—See Special Conditions. *Test Group 1 for C7:* Acute Toxicity to Fish: ASTM E 729–96 (Reapproved 2007). *Test Group 2 for C7:* Chronic Toxicity to *Daphnia:* ASTM E 1193–97 (Reapproved 2004).	
Mammalian toxicity—acute.	D	See special conditions for this test requirement and select the method that must be used from those listed in this column. *Method A:* Acute Inhalation Toxicity (rat): 40 CFR 799.9130 *Method B:* EITHER: 1. Acute (Up/Down) Oral Toxicity (rat): ASTM E 1163–98 (Reapproved 2002). OR 2. Acute (Up/Down) Oral Toxicity (rat): 40 CFR 799.9110(d)(1)(i)(A)..	Which testing method is required is determined by the test substance's physical state at room temperature (25 °C). For those test substances that are gases at room temperature, Method A is required; otherwise, use either of the two methods listed under Method B. In Method B, 40 CFR 799.9110(d)(1)(i)(A) refers to the OECD 425 Up/Down Procedure.[iv] Estimating starting dose for Method B: Data from the neutral red uptake basal cytotoxicity assay[v] using normal human keratinocytes or mouse BALB/c 3T3 cells may be used to estimate the starting dose.
Mammalian toxicity—genotoxicity.	E1	Bacterial Reverse Mutation Test *(in vitro):* 40 CFR 799.9510.	None.
	E2	Conduct any one of the following three tests for chromosomal damage: *In vitro* Mammalian Chromosome Aberration Test: 40 CFR 799.9537.. OR ..... Mammalian Bone Marrow Chromosomal Aberration Test (*in vivo* in rodents: mouse (preferred species), rat, or Chinese hamster): 40 CFR 799.9538. OR ..... Mammalian Erythrocyte Micronucleus Test [sampled in bone marrow] (*in vivo* in rodents: Mouse (preferred species), rat, or Chinese hamster): 40 CFR 799.9539..	Persons required to conduct testing for chromosomal damage are encouraged to use the *in vitro* Mammalian Chromosome Aberration Test (40 CFR 799.9537) to generate the needed data unless known chemical properties (*e.g.,* physical/chemical properties, chemical class characteristics) preclude its use. A subject person who uses one of the *in vivo* methods instead of the *in vitro* method to address a chromosomal damage test requirement must submit to EPA a rationale for conducting that alternate test in the final study report.
Mammalian toxicity—repeated dose/reproduction/developmental.	F1	Combined Repeated Dose Toxicity Study with the Reproduction/Developmental Toxicity Screening Test: 40 CFR 799.9365 OR ..... Reproduction/Developmental Toxicity Screening Test: 40 CFR 799.9355. AND ..... Repeated Dose 28-Day Oral Toxicity Study in rodents: 40 CFR 799.9305..	Where F1 is required, EPA recommends use of the Combined Repeated Dose Toxicity Study with the Reproduction/Developmental Toxicity Screening Test (40 CFR 799.9365). However, there may be valid reasons to test a particular chemical using both 40 CFR 799.9355 and 40 CFR 799.9305 to fill Mammalian Toxicity—Repeated Dose/Reproduction/Developmental data needs. A subject person who uses the combination of 40 CFR 799.9355 and 40 CFR 799.9305 in place of 40 CFR 799.9365 must submit to EPA a rationale for conducting these alternate tests in the final study reports. Where F2 or F3 is required, no rationale for conducting the required test need be provided in the final study report.
	F2	Reproduction/Developmental Toxicity Screening Test: 40 CFR 799.9355.	

TABLE 3—KEY TO THE TEST REQUIREMENTS DENOTED BY ALPHANUMERIC SYMBOLS IN TABLE 2 OF THIS PARAGRAPH—Continued

[**Note:** The ASTM and ISO test methods and the OECD guideline required in this paragraph are incorporated by reference; see paragraph (h) of this section]

Testing category	Test symbol	Test requirements and references	Special conditions
	F3	Repeated Dose 28-Day Oral Toxicity Study in rodents: 40 CFR 799.9305.	

[i] EPA recommends, but does not require, that log K_{ow} be quantitatively estimated prior to initiating this study. One method, among many similar methods, for estimating log K_{ow} is described in the article entitled ''Atom/Fragment Contribution Method for Estimating Octanol-Water Partition Coefficients'' by W.M. Meylan and P.H. Howard in the *Journal of Pharmaceutical Sciences.* 84(1):83–92. 1995. This reference is available in docket ID number EPA–HQ–OPPT–2009–0112 at the EPA Docket Center (EPA/DC), Rm. 3334, EPA West Bldg., 1301 Constitution Ave., NW., Washington, DC, from 8:30 a.m. to 4:30 p.m., Monday through Friday, excluding legal holidays. The telephone number of the EPA/DC Public Reading Room is (202) 566–1744, and the telephone number for the OPPT Docket is (202) 566–0280.

[ii] EPA recommends, but does not require, that water solubility be quantitatively estimated prior to initiating this study. One method, among many similar methods, for estimating water solubility is described in the article entitled ''Improved Method for Estimating Water Solubility From Octanol/Water Partition Coefficient'' by W.M. Meylan, P.H. Howard, and R.S. Boethling in *Environmental Toxicology and Chemistry.* 15(2):100–106. 1996. This reference is available in docket ID number EPA–HQ–OPPT–2009–0112 at the EPA Docket Center (EPA/DC), Rm. 3334, EPA West Bldg., 1301 Constitution Ave., NW., Washington, DC, from 8:30 a.m. to 4:30 p.m., Monday through Friday, excluding legal holidays. The telephone number of the EPA/DC Public Reading Room is (202) 566–1744, and the telephone number for the OPPT Docket is (202) 566–0280.

[iii] Chemical substances that are dispersible in water may have log K_{ow} values greater than 4.2 and may still be acutely toxic to aquatic organisms. Test sponsors who wish to conduct Test Group 1 studies on such chemical substances may request a modification to the test standard as described in 40 CFR 790.55. Based upon the supporting rationale provided by the test sponsor, EPA may allow an alternative threshold or method be used for determining whether acute or chronic aquatic toxicity testing be performed for a specific chemical substance.

[iv] The OECD 425 Up/Down Procedure, revised by OECD in December 2001, is available in docket ID number EPA–HQ–OPPT–2007–0531 at the EPA Docket Center (EPA/DC), Rm. 3334, EPA West Bldg., 1301 Constitution Ave., NW., Washington, DC, from 8:30 a.m. to 4:30 p.m., Monday through Friday, excluding legal holidays. The telephone number of the EPA/DC Public Reading Room is (202) 566–1744, and the telephone number for the OPPT Docket is (202) 566–0280.

[v] The neutral red uptake basal cytotoxicity assay, which may be used to estimate the starting dose for the mammalian toxicity-acute endpoint, is available in docket ID number EPA–HQ–OPPT–2009–0112 at the EPA Docket Center (EPA/DC), Rm. 3334, EPA West Bldg., 1301 Constitution Ave., NW., Washington, DC, from 8:30 a.m. to 4:30 p.m., Monday through Friday, excluding legal holidays. The telephone number of the EPA/DC Public Reading Room is (202) 566–1744, and the telephone number for the OPPT Docket is (202) 566–0280.

[76 FR 65404, Oct. 21, 2011]

§ 799.5115 Chemical testing requirements for certain chemicals of interest to the Occupational Safety and Health Administration.

(a) *What substances will be tested under this section?* Table 2 in paragraph (j) of this section identifies the chemical substances that must be tested under this section. For the chemical substances identified as ''Class 1'' substances in Table 2 in paragraph (j) of this section, the purity of each chemical substance must be 99% or greater, unless otherwise specified in this section. For the chemical substances identified as ''Class 2'' substances in Table 2 in paragraph (j) of this section, a representative form of each chemical substance must be tested.

(b) *Am I subject to this section?* (1) If you manufacture (including import) or intend to manufacture, or process or intend to process, any chemical substance listed in Table 2 in paragraph (j) of this section at any time from May 26, 2004, to the end of the test data reimbursement period as defined in 40 CFR 791.3(h), you are subject to this section with respect to that chemical substance.

(2) If you do not know or cannot reasonably ascertain that you manufacture or process a chemical substance listed in Table 2 in paragraph (j) of this section during the time period described in paragraph (b)(1) of this section (based on all information in your possession or control, as well as all information that a reasonable person similarly situated might be expected to possess, control, or know, or could obtain without an unreasonable burden), you are not subject to this section with respect to that chemical substance.

(c) *If I am subject to this section, when must I comply with it?* (1)(i) Persons subject to this section are divided into two groups, as set forth in Table 1 of this paragraph: Tier 1 (persons initially required to comply) and Tier 2 (persons not initially required to comply). If you are subject to this section, you must determine if you fall within Tier 1 or Tier 2, based on Table 1 of this paragraph.

TABLE 1—PERSONS SUBJECT TO THE RULE: PERSONS IN TIER 1 AND TIER 2

Persons initially required to comply with this section (Tier 1)	Persons not initially required to comply with this section (Tier 2)
Persons not otherwise specified in column 2 of this table that manufacture (as defined at TSCA section 3(7)) or intend to manufacture a chemical substance included in this section.	A. Persons who manufacture (as defined at TSCA section 3(7)) or intend to manufacture a chemical substance included in this section solely as one or more of the following: —As a byproduct (as defined at 40 CFR 791.3(c)); —As an impurity (as defined at 40 CFR 790.3); —As a naturally occurring substance (as defined at 40 CFR 710.4(b)); —As a non-isolated intermediate (as defined at 40 CFR 704.3); —As a component of a Class 2 substance (as described at 40 CFR 720.45(a)(1)(i)); —In amounts of less than 500 kilograms (kg) (1,100 lbs) annually (as described at 40 CFR 790.42(a)(4)); or —For research and development (as described at 40 CFR 790.42(a)(5)). B. Persons who process (as defined at TSCA section 3(10)) or intend to process a chemical substance included in this section (see 40 CFR 790.42(a)(2)).

(ii) Table 1 in paragraph (c)(1)(i) of this section expands the list of persons specified in §790.42(a)(2), (a)(4), and (a)(5) of this chapter, who, while legally subject to this section, must comply with the requirements of this section only if directed to do so by EPA under the circumstances set forth in paragraphs (c)(4) through (c)(7) and (c)(10) of this section.

(2) If you are in Tier 1 with respect to a chemical substance listed in Table 2 in paragraph (j) of this section, you must, for each test required under this section for that chemical substance, either submit to EPA a letter of intent to test or apply to EPA for an exemption from testing. The letter of intent to test or the exemption application must be received by EPA no later than June 25, 2004.

(3) If you are in Tier 2 with respect to a chemical substance listed in Table 2 in paragraph (j) of this section, you are considered to have an automatic conditional exemption and you will be required to comply with this section with regard to that chemical substance only if directed to do so by EPA under paragraphs (c)(5), (c)(7), or (c)(10) of this section.

(4) If no person in Tier 1 has notified EPA of its intent to conduct one or more of the tests required by this section on any chemical substance listed in Table 2 in paragraph (j) of this section by June 25, 2004, EPA will publish a FEDERAL REGISTER document that would specify the test(s) and the chemical substance(s) for which no letter of intent has been submitted, and notify manufacturers in Tier 2A of their obligation to submit a letter of intent to test or to apply for an exemption from testing.

(5) If you are in Tier 2A with respect to a chemical substance listed in Table 2 in paragraph (j) of this section, and if you manufacture this chemical substance as of May 26, 2004, or within 30 days after publication of the FEDERAL REGISTER document described in paragraph (c)(4) of this section, you must, for each test specified for that chemical substance in the document described in paragraph (c)(4) of this section, either submit to EPA a letter of intent to test or apply to EPA for an exemption from testing. The letter of intent to test or the exemption application must be received by EPA no later than 30 days after publication of the document described in paragraph (c)(4) of this section.

(6) If no manufacturer in Tier 1 or Tier 2A has notified EPA of its intent to conduct one or more of the tests required by this section on any chemical substance listed in Table 2 in paragraph (j) of this section within 30 days after the publication of the FEDERAL REGISTER document described in paragraph (c)(4) of this section, EPA will publish another FEDERAL REGISTER document that would specify the test(s) and the chemical substance(s) for which no letter of intent has been submitted, and notify processors in Tier 2B of their obligation to submit a letter of intent to test or to apply for an exemption from testing.

(7) If you are in Tier 2B with respect to a chemical substance listed in Table 2 in paragraph (j) of this section, and if you process this chemical substance as of May 26, 2004, or within 30 days after publication of the FEDERAL REGISTER document described in paragraph (c)(6)

of this section, you must, for each test specified for that chemical substance in the document described in paragraph (c)(6) of this section, either submit to EPA a letter of intent to test or apply to EPA for an exemption from testing. The letter of intent to test or the exemption application must be received by EPA no later than 30 days after publication of the document described in paragraph (c)(6) of this section.

(8) If no manufacturer or processor has notified EPA of its intent to conduct one or more of the tests required by this section for any of the chemical substances listed in Table 2 in paragraph (j) of this section within 30 days after the publication of the FEDERAL REGISTER document described in paragraph (c)(6) of this section, EPA will notify all manufacturers and processors of those chemical substances of this fact by certified letter or by publishing a FEDERAL REGISTER document specifying the test(s) for which no letter of intent has been submitted. This letter or FEDERAL REGISTER document will additionally notify all manufacturers and processors that all exemption applications concerning the test(s) have been denied, and will give the manufacturers and processors of the chemical substance(s) an opportunity to take corrective action.

(9) If no manufacturer or processor has notified EPA of its intent to conduct one or more of the tests required by this section for any of the chemical substances listed in Table 2 in paragraph (j) of this section within 30 days after receipt of the certified letter or publication of the FEDERAL REGISTER document described in paragraph (c)(8) of this section, all manufacturers and processors subject to this section with respect to that chemical substance who are not already in violation of this section will be in violation of this section.

(10) If a problem occurs with the initiation, conduct, or completion of the required testing or the submission of the required data with respect to a chemical substance listed in Table 2 in paragraph (j) of this section, under the procedures in §§ 790.93 and 790.97 of this chapter, EPA may initiate termination proceedings for all testing exemptions with respect to that chemical substance and may notify persons in Tier 1 and Tier 2 that they are required to submit letters of intent to test or exemption applications within a specified period of time.

(11) If you are required to comply with this section, but your manufacturing or processing of a chemical substance listed in Table 2 in paragraph (j) of this section begins after the applicable compliance date referred to in paragraphs (c)(2), (c)(5), (c)(7), or (c)(10) of this section, you must either submit a letter of intent to test or apply to EPA for an exemption. The letter of intent to test or the exemption application must be received by EPA no later than the day you begin manufacturing or processing.

(d) *What must I do to comply with this section?* (1) To comply with this section you must either submit to EPA a letter of intent to test, or apply to and obtain from EPA an exemption from testing.

(2) For each test with respect to which you submit to EPA a letter of intent to test, you must conduct the testing specified in paragraph (h) of this section and submit the test data to EPA.

(3) You must also comply with the procedures governing test rule requirements in part 790 of this chapter, as modified by this section, including the submission of letters of intent to test or exemption applications, the conduct of testing, and the submission of data; Part 792—Good Laboratory Practice Standards of this chapter; and this section. The following provisions of 40 CFR part 790 do not apply to this section: Paragraphs (a), (d), (e), and (f) of § 790.45; paragraph (a)(2) and paragraph (b) of § 790.80; and § 790.48.

(e) *If I do not comply with this section, when will I be considered in violation of it?* You will be considered in violation of this section as of 1 day after the date by which you are required to comply with this section.

(f) *How are EPA's data reimbursement procedures affected for purposes of this section?* If persons subject to this section are unable to agree on the amount or method of reimbursement for test data development for one or more chemical substances included in this section, any person may request a hearing as described in 40 CFR part 791.

In the determination of fair reimbursement shares under this section, if the hearing officer chooses to use a formula based on production volume, the total production volume amount will include amounts of a chemical substance produced as an impurity.

(g) *Who must comply with the export notification requirements?* Any person who exports, or intends to export, a chemical substance listed in Table 2 in paragraph (j) of this section is subject to part 707, subpart D, of this chapter.

(h) *How must I conduct my testing?* The chemical substances identified by Chemical Abstract Service Registry Number (CAS No.) and chemical name in Table 2 in paragraph (j) of this section must be tested as follows:

(1) *Applicability*. This *in vitro* dermal absorption rate test standard must be used for all testing conducted under this section. In certain instances, modifications to the test standard may be considered. The procedures for applying for a modification to the test standard are specified in 40 CFR 790.55.

(2) *Source*. The test standard is based on the Protocol for *In Vitro* Percutaneous Absorption Rate Studies, referenced in paragraph (h)(8)(v) of this section.

(3) *Purpose*. In the assessment and evaluation of the characteristics of a chemical substance or mixture for which testing is required under this section (test substance), it is important to determine the rate of absorption of the test substance in cases where dermal exposure to the test substance in the workplace may result in systemic toxicity. This test standard is designed to develop data that describe the rate at which test substances are absorbed through the skin so that the body burden of a test substance resulting from dermal exposure in the workplace can be better evaluated.

(4) *Principles of the test standard*. This test standard describes procedures for measuring a permeability constant (Kp) and two short-term dermal absorption rates for test substances in liquid form. The test standard utilizes *in vitro* diffusion cell techniques which allow absorption studies to be conducted with human cadaver skin. *In vitro* diffusion studies are necessary for measuring a Kp. This test standard specifies the use of static or flow-through diffusion cells and non-viable human cadaver skin. It also requires the use of radiolabeled test substances unless it can be demonstrated that procedures utilizing a non-radiolabeled test substance are able to measure the test substance with a sensitivity equivalent to the radiolabeled method.

(5) *Test procedure*—(i) *Choice of membrane*—(A) *Skin selection*. Human cadaver skin must be used in all testing conducted under this test standard. This test standard does not require use of live skin, or the maintenance of skin viability during the course of the experiment. However, the time elapsed between death and harvest of tissue must be reported.

(B) *Number of skin samples*. Data for the determination of a Kp must be obtained from a minimum of six skin samples and the skin samples must come from at least three different human subjects (two skin samples from each subject) in order to allow for biological variation between subjects. Data for the determination of each short-term (i.e., 10 minute and 60 minute) absorption rate must be obtained from a minimum of six skin samples and the skin samples must come from at least three different human subjects (two skin samples from each subject).

(C) *Anatomical region*. In order to minimize the variability in skin absorption measurements for these tests, samples of human cadaver skin must be obtained from the abdominal region of human subjects of known source and disease state.

(D) *Validation of human cadaver skin barrier*. Prior to conducting an experiment with the test substance, barrier properties of human cadaver skin must be pretested either by:

(*1*) Measuring the absorption of a standard compound such as tritiated water as discussed, for example, in the reference in paragraph (h)(8)(i) of this section;

(*2*) Determining an electrical resistance to an alternating current, at up to two volts; or

(*3*) Measuring trans-epidermal water loss from the stratum corneum.

(ii) *Preparation of membrane*. Full thickness skin must not be used. A

suitable membrane must be prepared from skin either with a dermatome at a thickness of 200 to 500 micrometers (μm), or with heat separation by treating the skin at 60 °C for 45 seconds to 2 minutes after which the epidermis can be peeled from the dermis. These epidermal membranes can be stored frozen (-20 °C) for up to 3 months, if necessary, if they are frozen quickly and the barrier properties of the samples are confirmed immediately prior to commencement of the experiment.

(iii) *Diffusion cell design*. Either static or flow-through diffusion cells must be used in these studies. To ensure that an increase in concentration of the test substance in the receptor fluid does not alter penetration rate, the testing laboratory must verify that the concentration of the test substance in the receptor fluid is less than 10% of the initial concentration in the donor chamber. Concentration of the neat (i.e., undiluted) liquid must be taken as the density of the test substance.

(iv) *Temperature*. Skin must be maintained at a physiological temperature of 32 °C during the test.

(v) *Testing hydrophobic chemicals*. When testing hydrophobic chemicals, polyethoxyoleate (polyethylene glycol (PEG) 20 oleyl ether) must be added to the receptor fluid at a concentration of 6%.

(vi) *Vehicle*. If the test substance is a liquid at room temperature and does not damage the skin during the determination of Kp, it must be applied neat. If the test substance cannot be applied neat because it is a solid at room temperature or because it damages the skin when applied neat, it must be dissolved in water. If the concentration of a hydrophobic test substance in water is not high enough so that a steady-state absorption can be obtained, the test substance must be dissolved in isopropyl myristate. A sufficient volume of liquid must be used to completely cover the skin and provide the amount of test substance as described in paragraph (h)(5)(vii) of this section.

(vii) *Dose*—(A) *Kp*. A Kp must be determined for each test chemical, except for methyl isoamyl ketone (MIAK; CAS No.: 110–12–3, Chemical Abstracts (CA) Index Name: 2-Hexanone, 5-methoxy-) and dipropylene glycol methyl ether (DPGME; CAS No.: 34590–94–8, CA Index Name: Propanol, 1(or 2)-(2-methoxymethylethoxy)-). An ''infinite dose'' of the test substance must be applied to the skin to achieve the steady-state rate of absorption necessary for calculation of a Kp. Infinite dose is defined as the concentration of a test substance required to give an undepletable reservoir on the surface of the skin. The actual concentration required to give an undepletable reservoir on the surface of the skin depends on the rate of penetration of the test substance. Preliminary studies may be necessary to determine this concentration. Percutaneous absorption must be determined under occluded (i.e., covered) conditions unless it is demonstrated that such conditions cause leakage of material or damage to the skin membrane as a result of unrealistically high pressures or excessive hydration. Skin barrier integrity must be verified at the end of the experiment by the methods discussed in paragraph (h)(5)(i)(D) of this section.

(B) *Short-term absorption rates*. Short-term absorption rates must be determined for all test chemicals. The dose of test chemical applied to the skin must be sufficient to completely cover the exposed skin surface. A minimum of four diffusion cells must be set up using skin from a single subject. Two diffusion cells must be terminated at 10 minutes. The remaining two diffusion cells must be terminated at 60 minutes. Skin absorption at each sampling time is the sum of the receptor fluid levels and the absorbed test substance that remains in the skin, as discussed, for example, in the reference in paragraph (h)(8)(iii) of this section. Unabsorbed chemical must be removed from the skin surface by washing gently with soap and water. This experiment must be repeated with skin from two additional subjects. In order to ensure reliable short-term absorption rates, percutaneous absorption must be determined under occluded conditions unless it is demonstrated that such conditions cause leakage of material or damage to the skin membrane as a result of unrealistically high pressures or excessive hydration.

(viii) *Study duration*—(A) *Kp*. The *in vitro* dermal absorption rate test must be performed until at least four absorption measurements per diffusion cell experiment are obtained during the steady-state absorption portion of the experiment. A preliminary study may be useful to establish time points for sampling. The required absorption measurements can be accomplished in an hour or two with fast-penetrating chemicals but may require 24 hours or longer for slow-penetrating chemicals. Unabsorbed test substance need not be removed from the surface of the skin after each experiment.

(B) *Short-term absorption rates*. The test substance must be applied to skin for durations of 10 and 60 minutes. At the end of the study, the unabsorbed test substance must be removed from the surface of the skin with soap and water and the amount absorbed into the skin and receptor fluid must be determined, as discussed, for example, in the reference in paragraph (h)(8)(iii) of this section.

(6) *Results*—(i) *Kp*. The Kp must be calculated by dividing the steady-state rate of absorption (measured in micrograms (μg) $\times$ hr^{-1} $\times$ centimeters $(cm)^{-2}$) by the concentration of the test substance (measured in μg $\times$ cm^{-3}) applied to the skin. (For example, if the steady-state rate is 1 microgram $\times$ hr^{-1} $\times$ cm^{-2} and the concentration applied to the skin is 1,000 micrograms $\times$ cm^{-3}, then the Kp value is calculated to be 0.001 cm $\times$ hr^{-1}.) The mean and standard deviation of the calculated Kp values for all diffusion cell experiments must be determined.

(ii) *Short-term absorption rate*. The absorption rates (μg $\times$ hr^{-1} $\times$ cm^{-2}) must be determined from the total amount of test substance found in the receptor fluid and skin after the 10-minute and 60-minute exposures for each diffusion cell experiment. The mean and standard deviation of 10-minute short-term absorption rates from all experiments must be calculated. The mean and standard deviation of 60-minute short-term absorption rates from all experiments must also be calculated.

(7) *Test report*. In addition to compliance with the TSCA Good Laboratory Practice Standards (GLPS) at 40 CFR part 792, the following specific information must be collected and reported by the date in paragraph (i) of this section:

(i) *Test systems and test methods*. (A) A description of the date, time, and location of the test, the name(s) of the person(s) conducting the test, the location of records pertaining to the test, as well as a GLPS statement. These statements must be certified by the signatures of the individuals performing the work and their supervisors.

(B) A description of the source, identity, and purity of the test substance and the source, identity, and handling of the test skin. There must be a detailed description of the test procedure and all materials, devices used and doses tested, as well as a detailed description and illustration of static or flow-through cell design. There must also be a description of the skin preparation method, including measurements of the skin membrane thickness.

(C) A description of the analytical techniques to be used, including their accuracy, precision, and detection limits (in particular for non-radiolabeled tests), and, if a radiolabel is used, there must be a description of the radiolabel (e.g., type, location of, and radiochemical purity of the label).

(D) All data must be clearly identified as to dose and specimen. Derived values (means, permeability coefficient, graphs, charts, etc.) are not sufficient.

(ii) *Conduct of study*. Data must be collected and reported on the following:

(A) Monitoring of testing parameters.

(B) Temperature of chamber.

(C) Receptor fluid pH.

(D) Barrier property validation.

(E) Analysis of receptor fluid for radioactivity or test chemical

(iii) *Results*. The mean Kp and mean short-term absorption rates must be presented along with their standard deviations and the number of diffusion cell experiments. In addition, all raw data from each individual diffusion cell must be retained to support the calculations of permeability constants and short-term absorption rates. When a radiolabeled test substance is used, a full balance of the radioactivity must be presented, including cell rinsing and

stability of the test substance in the donor compartment.

(8) *References*. For background information on this test standard, the following references may be consulted. These references are available under docket ID number OPPT–2003–0006 at the EPA Docket Center, Rm. B102–Reading Room, EPA West, 1301 Constitution Ave., NW., Washington, DC, from 8:30 a.m. to 4:30 p.m., Monday through Friday, excluding legal holidays.

(i) Bronaugh, R.L., Stewart, R.F., and Simon, M. Methods for *In Vitro* Percutaneous Absorption Studies VII: Use of Excised Human Skin. *Journal of Pharmaceutical Sciences*. 75:1094–1097. 1986.

(ii) Bronaugh, R.L. and Stewart, R.F. Methods for *In Vitro* Percutaneous Absorption Studies IV: The Flow-Through Diffusion Cell. *Journal of Pharmaceutical Sciences*. 74:64–67. 1985.

(iii) Bronaugh, R.L., Stewart, R.F., and Storm, J.E. Extent of Cutaneous Metabolism During Percutaneous Absorption of Xenobiotics. *Toxicology and Applied Pharmacology*. 99:534–543. 1989.

(iv) Walker, J.D., Whittaker, C. and McDougal, J.N. Role of the TSCA Interagency Testing Committee in Meeting the U.S. Government Data Needs: Designating Chemicals for Percutaneous Absorption Rate Testing. *Dermatotoxicology*. F. Marzulli and H. Maibach, Eds. Taylor & Francis, Washington, DC. pp. 371–381. 1996.

(v) Bronaugh, R.L., and Collier, S.W. Protocol for *In Vitro* Percutaneous Absorption Studies. *In Vitro Percutaneous Absorption: Principles, Fundamentals, and Applications*. R.L. Bronaugh and H.I. Maibach, Eds. CRC Press, Boca Raton, FL. pp. 237–241. 1991.

(i) *Reporting requirements*. The reports submitted under this section must include the information specified in paragraph (h)(7) of this section. A final report for each chemical substance must be received by EPA by June 27, 2005, unless an extension is granted in writing pursuant to 40 CFR 790.55.

(j) *Designation of specific chemical substances for testing*. The chemical substances identified by chemical name, CAS No., and class in Table 2 of this paragraph must be tested in accordance with the testing requirements in paragraph (h) of this section and the requirements described in 40 CFR part 792.

TABLE 2—CHEMICAL SUBSTANCES DESIGNATED FOR TESTING

CAS No.	Chemical name	Class
75–05–8	Acetonitrile	1
75–15–0	Carbon disulfide	1
75–35–4	Vinylidene chloride	1
77–73–6	Dicyclopentadiene	1
78–59–1	Isophorone	1
78–87–5	Propylene dichloride	1
79–20–9	Methyl acetate	1
79–46–9	2-Nitropropane	1
91–20–3	Naphthalene	1
92–52–4	Biphenyl	1
98–29–3	*tert*-Butylcatechol	1
100–00–5	*p*-Nitrochlorobenzene	1
100–01–6	*p*-Nitroaniline	1
100–44–7	Benzyl chloride	1
106–42–3	*p*-Xylene	1
106–46–7	*p*-Dichlorobenzene	1
107–06–2	Ethylene dichloride	1
107–31–3	Methyl formate	1
108–03–2	1-Nitropropane	1
108–90–7	Chlorobenzene	1
108–93–0	Cyclohexanol	1
109–66–0	Pentane	1
109–99–9	Tetrahydrofuran	1
110–12–3	Methyl isoamyl ketone	1
111–84–2	Nonane	1
120–80–9	Catechol	1
122–39–4	Diphenylamine	1
123–42–2	Diacetone alcohol	1
127–19–5	Dimethyl acetamide	1
142–82–5	*n*-Heptane	1
150–76–5	*p*-Methoxyphenol	1
25013–15–4	Vinyl toluene	2
34590–94–8	Dipropylene glycol methyl ether	2

(k) *Effective date* This section is effective on May 26, 2004.

[69 FR 22436, Apr. 26, 2004, as amended at 71 FR 18654, Apr. 12, 2006]

Subpart E—Product Properties Test Guidelines

SOURCE: 65 FR 78751, Dec. 15, 2000, unless otherwise noted.

§ 799.6755 TSCA partition coefficient (*n*-octanol/water), shake flask method.

(a) *Scope*—(1) *Applicability*. This section is intended to meet the testing requirements of the Toxic Substances Control Act (TSCA) (15 U.S.C. 2601).

(2) *Source*. The source material used in developing this TSCA test guideline is the Office of Prevention, Pesticides and Toxics (OPPTS) harmonized test guideline 830.7550 (August 1996, final guideline). The source is available at

the address in paragraph (f) of this section.

(b) *Introductory information*—(1) *Prerequisites*. Suitable analytical method, dissociation constant, water solubility, and hydrolysis (preliminary test).

(2) *Coefficient of variation*. The coefficient of variation on the mean values reported by the participants of the Organization for Economic Coopertion and Development (OECD) Laboratory Intercomparison Testing, Part I, 1979, appeared to be dependent on the chemicals tested; it ranges from 0.17 to 1.03.

(3) *Qualifying statements*. This method applies only to pure, water soluble substances which do not dissociate or associate, and which are not surface active. In order to use the partition coefficient (P) as a screening test for bioaccumulation, it should be ascertained that the impurities in the commercial product are of minor importance. Testing of P (*n*-octanol/water) cannot be used as a screening test in the case of organometallic compounds.

(4) *Alternative methods*. High-pressure liquid chromatography (HPLC) methods described in the references in paragraphs (f)(3), (f)(4), and (f)(5) of this section may be considered as an alternative test method.

(c) *Method*—(1) *Introduction, purpose, scope, relevance, application, and limits of test*. The P of a substance between water and a lipophilic solvent (*n*-octanol) is one model variable which may be used to describe the transfer of a substance from the aquatic environment into an organism and the potential bioaccumulation of the substance. Studies show a highly significant relationship between the P of different substances in the system water/*n*-octanol and their bioaccumulation in fish described in paragraph (f)(1) of this section.

(2) *Definitions—Partition coefficient* (P) is defined as the ratio of the equilibrium concentrations (C_i) of a dissolved substance in a two-phase system consisting of two largely immiscible solvents. The P therefore is the quotient of two concentrations and is usually given in the form of its logarithm to base 10 (log P). In this case *n*-octanol and water:

Equation 1:

$$P_{ow} = C_{n\text{-octanol}}/C_{water}$$

(3) *Reference substances*. The reference substances need not be employed in all cases when investigating a new substance. They are provided primarily so that calibration of the method may be performed from time to time and to offer the chance to compare the results when another method is applied. The values presented in table 1 of this section are not necessarily representative of the results which can be obtained with this test method as they have been derived from an earlier version of the test guideline.

TABLE 1—DATA FOR REFERENCE SUBSTANCES

Tested substance [1]	P_{ow} [2]	
Di(2-ethylhexyl)phthalate (OECD)	1.3×10^5	($4.6 \times 10^4 - 2.8 \times 10^5$)
Hexachlorobenzene (OECD)	3.6×10^5	($1.1 \times 10^5 - 8.3 \times 10^5$)
o-Dichlorobenzene European Economic Community (EEC)	5.1×10^3	($1.5 \times 10^3 - 2.3 \times 10^4$)
Dibutyl phthalate (EEC)	1.3×10^4	($1.7 \times 10^3 - 2.8 \times 10^4$)
Trichloroethylene (OECD)	2.0×10^3	($5.2 \times 10^2 - 3.7 \times 10^3$)
Urea (OECD)	6.2×10^{-2}	(2.0×10^{-2}—2.4×10^{-1})

[1] Substances not tested: Ethyl acetate, 4-methyl-2,4-pentanediol.
[2] Total, mean, and range of mean values (in parentheses) submitted by the participants of the OECD or EEC Laboratory Intercomparison Testing.

(4) *Principle of the test method*. In order to determine a P, equilibrium between all interacting components of the system must be achieved, and the concentrations of the substances dissolved in the two phases must be determined. A study of the literature on this subject indicates that there are many different techniques which can be used to solve this problem, i.e. the thorough mixing of the two phases followed by their separation in order to determine the equilibrium concentration for the substance being examined.

(5) *Quality criteria*—(i) *Repeatability*. In order to assure the precision of the

P, duplicate determinations are to be made under three different test conditions, whereby the quantity of substance specified as well as the ratio of the solvent volumes may be varied. The determined values of the P expressed as their common logarithms should fall within a range of ±0.3 log units.

(ii) *Sensitivity*. The sensitivity of the method is determined by the sensitivity of the analytical procedure. This should be sufficient to permit the assessment of values of P_{ow} up to 105 when the concentration of the solute in either phase is not more than 0.01 mol/Liter (L). The substance being tested must not be water insoluble (mass concentration $\rho \leq 10^{-6}$ gram (g)/L.

(iii) *Specificity*. The Nernst Partition Law applies only at constant temperature, pressure, and pH for dilute solutions. It strictly applies to a pure substance dispersed between two pure solvents. If several different solutes occur in one or both phases at the same time, this may affect the results. Dissociation or association of the dissolved molecules result in deviations from the Nernst Partition Law. Such deviations are indicated by the fact that the P becomes dependent upon the concentration of the solution. Because of the multiple equilibria involved, this test guideline should not be applied to ionizable compounds without corrections being made. The use of buffer solutions in place of water should be considered for such compounds.

(iv) *Possibility of standardization*. This method can be standardized.

(d) *Description of the test procedure*—(1) *Preparations: Preliminary estimate of the P*. The size of the P can be estimated either by means of calculation or by use of published solubilities of the test substance in the pure solvents. Alternatively, it may be roughly determined by performing a simplified preliminary test. For this:

Equation 2:

$$P_{estimate} = (\text{saturation } C_{n\text{-octanol}})/(\text{saturation } C_{water})$$

(2) *Preparation of the solvents*—(i) *n-Octanol*. The determination of the P should be carried out with analytical grade *n*-octanol. Inorganic contaminants can be removed from commercial *n*-octanol by washing with acid and base, drying, and distilling. More sophisticated methods will be required to separate the *n*-octanol from organic contaminants with similar vapor pressure if they are present.

(ii) *Water*. Distilled water or water twice-distilled from glass or quartz apparatus should be employed. Water taken directly from an ion exchanger should not be used.

(iii) *Presaturation of the solvents*. Before a P is determined, the phases of the solvent system are mutually saturated by shaking at the temperature of the experiment. For doing this, it is practical to shake two large stock bottles of purified *n*-octanol or distilled water each with a sufficient quantity of the other solvent for 24 hours on a mechanical shaker, and then to let them stand long enough to allow the phases to separate and to achieve a saturation state.

(3) *Preparation for the test*. The entire volume of the two-phase system should nearly fill the test vessel. This will help prevent loss of material due to volatilization. The volume ratio and quantities of substance to be used are fixed by the following:

(i) The preliminary assessment of the P as discussed in paragraph (d)(1) of this section).

(ii) The minimum quantity of test substance required for the analytical procedure.

(iii) The limitation of a maximum concentration in either phase of 0.01 mol/L.

(iv) Three tests are carried out. In the first, the calculated volume ratio is added; in the second, twice the volume of *n*-octanol is added; and in the third, half the volume of *n*-octanol is added.

(4) *Test substance*. The test substance should be the purest available. For a material balance during the test a stock solution is prepared in *n*-octanol

with a mass concentration between 1 and 100 milligram/milliliter (mg/mL). The actual mass concentration of this stock solution should be precisely determined before it is employed in the determination of the P. This solution should be stored under stable conditions.

(5) *Test conditions.* The test temperature should be kept constant (±1 °C) and lie in the range of 20–25 °C.

(6) *Performance of the test*—(i) *Establishment of the partition equilibrium.* Duplicate test vessels containing the required, accurately measured amounts of the two solvents together with the necessary quantity of the stock solution should be prepared for each of the test conditions. The *n*-octanol parts should be measured by volume. The test vessels should either be placed in a suitable shaker or shaken by hand. A recommended method is to rotate the centrifuge tube quickly through 180° about its transverse axis so that any trapped air rises through the two phases. Experience has shown that 50 such rotations are usually sufficient for the establishment of the partition equilibrium. To be certain, 100 rotations in 5 minutes are recommended.

(ii) *Phase separation.* In order to separate the phases, centrifugation of the mixture should be carried out. This should be done in a laboratory centrifuge maintained at room temperature, or, if a non-temperature-controlled centrifuge is used, the centrifuge tubes should be reequilibrated at the test temperature for at least 1 hour before analysis.

(7) *Analysis.* (i) For the determination of the P, it is necessary to analyze the concentrations of the test substance in both phases. This may be done by taking an aliquot of each of the two phases from each tube for each test condition and analyzing them by the chosen procedure. The total quantity of substances present in both phases should be calculated and compared with the quantity of the substance originally introduced.

(ii) The aqueous phase should be sampled by the following procedure to minimize the risk of including traces of the *n*-octanol: A glass syringe with a removable needle should be used to sample the water phase. The syringe should initially be partially filled with air. Air should be gently expelled while inserting the needle through the *n*-octanol layer. An adequate volume of aqueous phase is withdrawn into the syringe. The syringe is quickly removed from the solution and the needle detached. The contents of the syringe may then be used as the aqueous sample.

(iii) The concentration in the two-separated phases should preferably be determined by a substance-specific method. Examples of physical-chemical determinations which may be appropriate are:

(A) Photometric methods.

(B) Gas chromatography.

(C) HPLC.

(D) Back-extraction of the aqueous phase and subsequent gas chromatography.

(e) *Data and reporting*—(1) *Treatment of results.* The reliability of the determined values of P can be tested by comparison of the means of the duplicate determinations with the overall mean.

(2) *Test report.* The following should be included in the report:

(i) Name of the substance, including its purity.

(ii) Temperature of the determination.

(iii) The preliminary estimate of the P and its manner of determination.

(iv) Data on the analytical procedures used in determining concentrations.

(v) The measured concentrations in both phases for each determination. This means that a total of 12 concentrations must be reported.

(vi) The weight of the test substance, the volume of each phase employed in each test vessel, and the total calculated amount of test substance present in each phase after equilibration.

(vii) The calculated values of the P and the mean should be reported for each set of test conditions as should the mean for all determinations. If there is a suggestion of concentration dependency of the P, this should be noted in the report.

(viii) The standard deviation of individual P values about their mean should be reported.

(ix) The mean P from all determinations should also be expressed as its logarithm (base 10).

(f) *References*. For additional background information on this test guideline, the following references should be consulted. These references are available at the addresses in § 700.17(b)(1) and (2) of this chapter.

(1) Neely, W.B. et al. Partition Coefficients to Measure Bioconcentration Potential of Organic Chemicals in Fish. *Environmental Science and Technology* 8:1113 (1974).

(2) Leo, A. et al. Partition Coefficients and Their Uses. *Chemical Reviews* 71:525 (1971).

(3) Miyake, K. and H. Terada, Direct measurements of partition coefficients in an octanol-water system. *Journal of Chromatography* 157:386 (1978).

(4) Veith G.D. and R.T. Morris, A Rapid Method for Estimating Log P for Organic Chemicals, EPA–600/3–78–049 (1978).

(5) Mirrless, M.S. et al., Direct measurement of octanol-water partition coefficient by high pressure liquid chromatography. *Journal of Medicinal Chemistry* 19:615 (1976).

(6) EPA Draft Guidance of September 8, 1978 (F–16).

(7) Konemann H. et al. Determination of log P_{oct} values of chlorosubstituted benzenes, toluenes, and anilines by high performance liquid chromatography on ODS silica, *Journal of Chromatography* 178:559 (1979).

(8) *Organization for Economic Cooperation and Development*, Guidelines for The Testing of Chemicals, OECD 107, Partition Coefficient (*n*-octanol/water) (Shake Flask Method, Adopted 27 July 1995), OECD, Paris, France.

[65 FR 78751, Dec. 15, 2000, as amended at 77 FR 46293, Aug. 3, 2012]

§ 799.6756 TSCA partition coefficient (*n*-octanol/water), generator column method.

(a) *Scope*—(1) *Applicability*. This section is intended to meet the testing requirements of the Toxic Substances Control Act (TSCA) (15 U.S.C. 2601).

(2) *Source*. The source material used in developing this TSCA test guideline is the Office of Pollution Prevention, Pesticides and Toxic Substances (OPPTS) harmonized test guideline 830.7560 (August 1996, final guideline). This source is available at the address in paragraph (e) of this section.

(b)(1) *Purpose*. (i) The measurement and estimation of the *n*-octanol/water partition coefficient (K_{ow}), has become the cornerstone of a myriad of structure-activity relationships (SAR) property. The coefficient has been used extensively for correlating structural changes in drugs with changes observed in biological, biochemical, or toxic effects. These correlations are then used to predict the effect of a new drug for which a K_{ow} could be measured.

(ii) In the study of the environmental fate of organic chemicals, the K_{ow} has become a key parameter. K_{ow} is correlated to water solubility, soil/sediment sorption coefficient, and bioconcentration and is important to SAR.

(iii) Of the three properties that can be estimated from K_{ow}, water solubility is the most important because it affects both the fate and transport of chemicals. For example, highly soluble chemicals become quickly distributed by the hydrologic cycle, have low-sorption coefficients for soils and sediments, and tend to be more easily degraded by microorganisms. In addition, chemical transformation processes such as hydrolysis, direct photolysis, and indirect photolysis (oxidation) tend to occur more readily if a compound is soluble.

(iv) Direct correlations between K_{ow} and both the soil/sediment sorption coefficient and the bioconcentration factor are to be expected. In these cases, compounds that are more soluble in *n*-octanol (more hydrophobic and lipophilic) would be expected to partition out of the water and into the organic portion of soils/sediments and into lipophilic tissue. The relationship between K_{ow} and the bioconcentration factor, are the principal means of estimating bioconcentration factors. This relationship is discussed in the reference listed in paragraph (e)(14) of this section. These factors are then used to predict the potential for a chemical to accumulate in living tissue.

(v) This section describes a method for determining the K_{ow} based on the dynamic coupled column liquid chromatographic (DCCLC) technique, a

technique commonly referred to as the generator column method. The method described herein can be used in place of the standard shake-flask method specified in § 799.6755 for compounds with a $\log_{10}K_{ow}$ greater than 1.0.

(2) *Definitions*. The following definitions apply to this section.

Extractor column is used to extract the solute from the aqueous solution produced by the generator column. After extraction onto a bonded chromatographic support, the solute is eluted with a solvent/water mixture and subsequently analyzed by high-performance liquid chromatography (HPLC), gas chromatography (GC), or any other analytical procedure. A detailed description of the preparation of the extractor column is given in paragraph (c)(1)(i) of this section.

Generator column is used to partition the test substance between the *n*-octanol and water phases. The column in figure 1 in paragraph (c)(1)(i)(A)(*2*) of this section is packed with a solid support and is coated with the test substance at a fixed concentration in *n*-octanol. The test substance is eluted from the column with water and the aqueous solution leaving the column represents the equilibrium concentration of the test substance that has partitioned from the *n*-octanol phase into the water phase. Preparation of the generator column is described in paragraph (c)(1)(i) of this section.

n-Octanol/water partition coefficient (K_{ow}) is defined as the ratio of the molar concentrations of a chemical in *n*-octanol and water, in dilute solution. The coefficient K_{ow} is a constant for a given chemical at a given temperature. Since K_{ow} is the ratio of two molar concentrations, it is a dimensionless quantity. Sometimes K_{ow} is reported as the decadic logarithm ($\log_{10}K_{ow}$). In this equation, $C_{octanol}$ and C_{water} are the molar concentration of the solute in *n*-octanol and water, respectively, at a given temperature. This test procedure determines K_{ow} at 25 ±0.05 °C. The mathematical statement of K_{ow} is:

Equation 1:

$$K_{ow} = C_{octanol}/C_{water}$$

Response factor (RF) is the solute concentration required to give a one unit area chromatographic peak or one unit output from the HPLC recording integrator at a particular recorder and detector attenuation. The factor is required to convert from units of area to units of concentration. The determination of the RF is given in paragraph (c)(3)(iii)(C)(*2*) of this section.

Sample loop is a 1/16 inch (in) outside diameter (O.D.) (1.6 millimeter (mm)) stainless steel tube with an internal volume between 20 and 50 μL. The loop is attached to the sample injection valve of the HPLC and is used to inject standard solutions into the mobile phase of the HPLC when determining the RF for the recording integrator. The exact volume of the loop must be determined as described in paragraph (c)(3)(iii)(C)(*1*) of this section when the HPLC method is used.

(3) *Principle of the test method*. (i) This test method is based on the DCCLC technique for determining the aqueous solubility of organic compounds. The development of this test method is described in the references listed in paragraphs (e)(6), (e)(12), and (e)(19) of this section. The DCCLC technique utilizes a generator column, extractor column, and HPLC coupled or interconnected to provide a continuous closed-flow system. Aqueous solutions of the test compound are produced by pumping water through the generator column that is packed with a solid support coated with an approximately 1.0% weight/weight (w/w) solution of the compound in *n*-octanol. The aqueous solution leaving the column represents the equilibrium concentration of the test chemical which has partitioned from the *n*-octanol phase into the water phase. The compound is extracted from the aqueous solution onto an extractor column, then eluted from the extractor column with a solvent/water mixture and subsequently analyzed by HPLC using a variable wavelength ultraviolet (UV) absorption detector operating at a suitable wavelength. Chromatogram peaks are recorded and integrated using a recording integrator. The concentration of the compound in the effluent from the generator column is determined from the mass of the compound (solute) extracted from a measured volume of water (solvent). The K_{ow} is calculated

from the ratio of the molar concentration of the solute in the 1.0% (w/w) *n*-octanol and molar concentration of the solute in water as determined using the generator column technique.

(ii) Since the HPLC method is only applicable to compounds that absorb in the UV, an alternate GC method, or any other reliable quantitative procedure must be used for those compounds that do not absorb in the UV. In the GC method the saturated solutions produced in the generator column are extracted using an appropriate organic solvent that is subsequently injected into the GC, or any other suitable analytical device, for analysis of the test compound.

(4) *Reference chemicals.* (i) Columns 2, 3, 4, and 5 of table 1 in paragraph (b)(4)(ii) of this section list the experimental values of the decadic logarithm of the *n*-octanol/water partition coefficient ($\log_{10}K_{ow}$) at 25 °C for a number of organic chemicals as obtained from the scientific literature. These values were obtained by any one of the following experimental methods: Shake-flask; generator column; reverse-phase HPLC; or reverse-phase thin-layer chromatography, as indicated in the footnotes following each literature citation. The estimation method of Hawker and Connell as described in paragraph (e)(8) of this section, correlates $\log_{10}K_{ow}$ with the total surface area of the molecule and was used to estimate $\log_{10}K_{ow}$ for biphenyl and the chlorinated biphenyls. These estimated values are listed in column 7 of table 1 in paragraph (b)(4)(ii) of this section. Recommended values of $\log_{10}K_{ow}$ were obtained by critically analyzing the available experimental and estimated values and averaging the best data. These recommended values are listed in column 8 of table 1 in paragraph (b)(4)(ii) of this section.

(ii) The recommended values listed in table 1 of this section have been provided primarily so that the generator column method can be calibrated and to allow the chemical laboratory the opportunity to compare its results with these values. The testing laboratory has the option of choosing its reference chemicals, but references must be given to establish the validity of the measured values of $\log_{10}K_{ow}$.

TABLE 1—N-OCTANOL/WATER PARTITION COEFFICIENT AT 25 °C FOR SOME REFERENCE COMPOUNDS

Chemical	Experimental $\log_{10}K_{ow}$				Estimated $\log_{10}K_{ow}$		Recommended $\log_{10}K_{ow}$
	Hansch and Leo [1]	Generator Column Method	Banerjee [2]	Other values	Hansch and Leo [3]	Hawker and Connell [4]	
Ethyl acetate	0.73, 0.66	[5]0.68	—	—	0.671	—	[17]0.685
1-Butanol	0.88, 0.89, 0.32, 0.88	[5]0.785	—	—	0.823	—	[23]0.852
1-Pentanol	1.28, 1.40	[5]1,53	—	—	1.35	—	[17]1.39
Nitrobenzene	1.85, 1.88, 1.79	[5]1.85	1.83	[6]1.82	1.89	—	[17]1.84
Benzene	2.15, 2.13	—	2.12	—	2.14	—	[17]2.14
Trichloroethylene	2.29	[5]2.53	2.42	—	2.27	—	[17]2.38
Chlorobenzene	2.84, 2.46	[7]2.98	—	[8]2.84	2.86	—	[18]2.80
o-Dichlorobenzene	3.38	[7]3.38	3.40	[8]3.38	3.57	—	[17]3.42
n-Propylbenzene	3.66, 3.66, 3.68, 3.57	[5]3.69	—	—	3.85	—	[17]3.69
Biphenyl	3.95, 4.17, 4.09, 4.04	[7]3.67, [9]3.89, [10]3.79	4.04	[6]3.75	4.03	4.09	[17]3.96
2-Chlorobiphenyl	—	[7]4.50, [9]4.38	—	[10]3.90, [11]3.75, [12]4.59, [13]4.54	—	4.99	[19]4.49
1,2,3,5-Tetrachlorobenzene	—	[7]4.65	4.46	—	4.99	—	[17]4.70
2,2′-Dichlorobiphenyl	—	[9]4.90	—	[9]4.90, [10]3.63, [11]3.55, [14]4.51, [15]5.02	—	4.65	[20]4.80
Pentachlorobenzene	—	[7]5.03	4.94	—	5.71	—	[24]4.99
2,4,5-Trichlorobiphenyl	—	[7]5.51, [9]5.81	—	[10]5.67, [10]5.86, [15]5.77	—	5.60	[17]5.70

TABLE 1—N-OCTANOL/WATER PARTITION COEFFICIENT AT 25 °C FOR SOME REFERENCE COMPOUNDS—Continued

Chemical	Experimental $log_{10}K_{ow}$				Estimated $log_{10}K_{ow}$		Recommended $log_{10}K_{ow}$
	Hansch and Leo [1]	Generator Column Method	Banerjee [2]	Other values	Hansch and Leo [3]	Hawker and Connell [4]	
2,3,4,5-Tetrachlorobiphenyl	—	[4]6.18, [7]5.72	—	—	—	6.04	[17]5.98
2,2′,4,5,5′-Pentachlorobi-phenyl	6.11	[9]6.50, [7]5.92	—	[13]6.11, [12]6.85	—	6.38	[17]6.31
2,2′,3,3′,6,6′-Hexachloro-biphenyl	—	[4]5.76, [7]6.63, [9]6.81	—	—	—	6.22	[17]6.36
2,2′,3,3′,4,4′,6-Heptachlorobiphenyl	—	[7]6.68	—	—	—	7.11	[17]6.90
2,2′,3,3′,5,5′,6,6′-Octachlorobiphenyl	—	[7]7.11, [9]7.14	—	[12]8.42	—	7.24	[21]7.16
2,2′,3,3′,4, 4′,5,6,6′-Nona-chlorobiphenyl	—	[4]7.52	—	—	—	7.74	[17]7.63
2,2′,3,3′,4, 5,5′6,6′-Nona-chlorobiphenyl	—	[7]8.16	—	—	—	7.71	[17]7.94
Decachlorobiphenyl	—	[7]8.26, [9]8.20	—	[12]9.60	—	8.18	[22]8.21

[1] Hansch and Leo (1979). Shake-flask method in paragraph (e)(8) of this section.
[2] Banerjee, Yalkowski, and Valvani (1980). Shake-flask method in paragraph (e)(1) of this section.
[3] Hansch and Leo (1984). Estimates $log_{10}K_{ow}$ using the CLogP3 computer program in paragraph (e)(9) of this section.
[4] Hawker and Connell (1988). Generator column method and an estimation method correlating $log_{10}K_{ow}$ with the total surface area of the molecule in paragraph (e)(8) of this section.
[5] Tewari et al. (1982). Generator column method in paragraph (e)(14) of this section.
[6] Veith, Austin, and Morris (1979). Reverse-phase HPLC method in paragraph (e)(16) of this section.
[7] Miller et al. (1984). Generator column method in paragraph (e)(11) of this section.
[8] Chiou and Schmedding (1982). Shake-flask method in paragraph (e)(4) of this section.
[9] Woodburn, Doucette, and Andren (1984). Generator column method in paragraph (e)(19) of this section.
[10] Rapaport and Eisenreich (1984). Reverse-phase HPLC method in paragraph (e)(13) of this section.
[11] Woodburn (1982). Reverse-phase HPLC method in paragraph (e)(18) of this section.
[12] Bruggemann, Van der Steen, and Hutzinger (1978). Shake-flask method in paragraph (e)(2) of this section.
[13] Tulp and Hutzinger (1978). Shake-flask method in paragraph (e)(15) of this section.
[14] Chiou, Porter, and Schmedding (1983). Shake-flask method in paragraph (e)(5) of this section.
[15] Bruggemann, Van Der Steen , and Hutzinger (1982). Reverse-phase thin-layer chromatography in paragraph (e)(2) of this section.
[16] Chiou et al. (1977). Shake-flask method in paragraph (e)(3) of this section.
[17] Average value using all the data.
[18] Average value using all the data except the datum point 2.46.
[19] Average value using all the data except the data points 3.90 and 3.75.
[20] Average value using all the data except the data points 3.63 and 3.55.
[21] Average value using all the data except the datum point 8.42.
[22] Average value using all the data except the datum point 9.60.
[23] Average value using all the data except the datum point 0.32.
[24] Average value using all the data excluding the estimated datum point 5.71.

(5) *Applicability and specificity*. The test guideline is designed to determine the K_{ow} of solid or liquid organic chemicals in the range $\log_{10}K_{ow}$ 1.0 to ≤6.0 (10 to ≤10^6).

(c) *Test procedure*—(1) *Test conditions*—(i) *Special laboratory equipment*—(A)(*1*) *Generator column*. Either of two different methods for connecting to the generator column shall be used depending on whether the eluted aqueous phase is analyzed by HPLC (Procedure A, as described in paragraph (c)(3)(iii) of this section) or by solvent extraction followed by GC analysis, or any other reliable method of solvent extract (Procedure B, as described in paragraph (c)(3)(iv) of this section).

(*2*)(*i*) The design of the generator column is shown in the following figure 1:

Figure 1—Generator Column

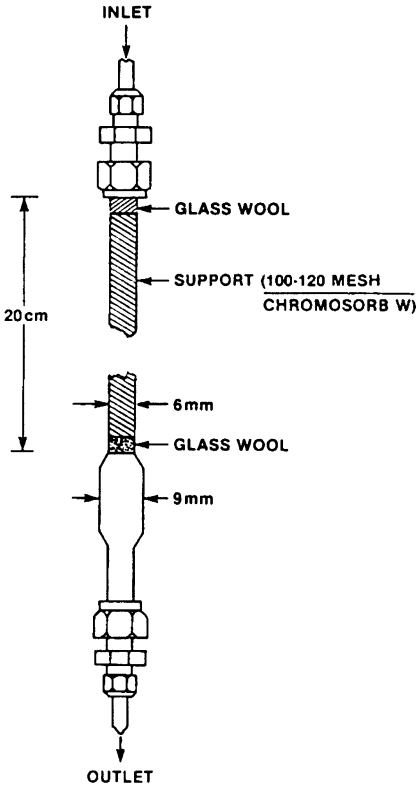

(*ii*) The column consists of a 6 mm (¼ in) O.D. pyrex tube joined to a short enlarged section of 9 mm pyrex tubing which in turn is connected to another section of 6 mm (¼ in) O.D. pyrex tubing. Connections to the inlet teflon tubing (⅛ in O.D.) and to the outlet stainless steel tubing (1⁄16 in O.D.) are made by means of stainless steel fittings with teflon ferrules. The column is enclosed in a water jacket for temperature control as shown in the following figure 2:

FIGURE 2—SETUP SHOWING GENERATOR COLUMN ENCLOSED IN A WATER JACKET AND OVERALL ARRANGEMENT OF THE APPARATUS USED IN GC METHOD

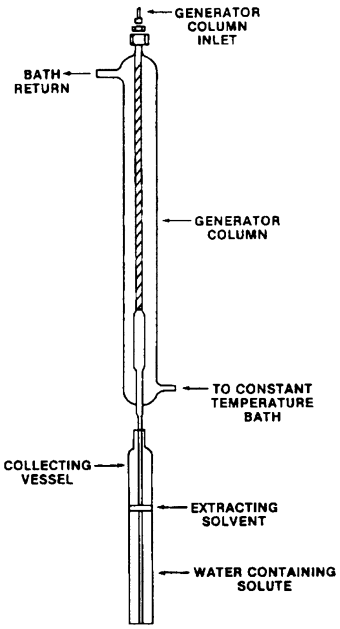

(B) Constant temperature bath with circulation pump-bath and capable of controlling temperature to 25 ±0.05 °C. (Procedures A and B, as described in paragraphs (c)(3)(iii) and (c)(3)(iv) of this section, respectively).

(C) HPLC equipped with a variable wavelength UV absorption detector operating at a suitable wavelength and a recording integrator (Procedure A, as described in paragraph (c)(3)(iii) of this section).

(D) Extractor column—6.6 × 0.6 centimeter (cm) stainless steel tube with end fittings containing 5 micron frits

filled with a superficially porous phase packing (such as Bondapack C_{18} Corasil: Waters Associates) (Procedure A, as described in paragraph (c)(3)(iii) of this section).

(E) Two 6-port high-pressure rotary switching valves (Procedure A, as described in paragraph (c)(3)(iii) of this section).

(F) Collection vessel—8 × ¾ in section of pyrex tubing with a flat bottom connected to a short section of ⅜ in O.D. borosilicate glass tubing. The collecting vessel is sealed with a ⅜ in teflon cap fitting (Procedure B, as described in paragraph (c)(3)(iv) of this section).

(G) GC, or any other reliable analytic equipment, equipped with a detector sensitive to the solute of interest (Procedure B, as described in paragraph (c)(3)(iv) of this section).

(ii) *Purity of n-octanol and water*. Purified *n*-octanol, described in paragraph (c)(2)(i) of this section, and water meeting appropriate American Society for Testing and Materials Type II standards, or an equivalent grade, are recommended to minimize the effects of dissolved salts and other impurities. An ASTM Type II water standard is presented in the reference listed in paragraph (e)(20) of this section).

(iii) *Purity of solvents*. It is important that all solvents used in this method be reagent or HPLC grade and contain no impurities which could interfere with the determination of the test compound.

(iv) *Reference compounds*. In order to ensure that the HPLC system is working properly, at least two of the reference compounds listed in table 1 in paragraph (b)(4)(ii) of this section should be run. Reference compounds shall be reagent or HPLC grade to avoid interference by impurities.

(2) *Preparation of reagents and solutions*—(i) *n-Octanol and water*. Very pure *n*-octanol can be obtained as follows: Wash pure *n*-octanol (minimum 98% pure) sequentially with 0.1N H^2SO_4, with 0.1N NaOH, then with distilled water until neutral. Dry the *n*-octanol with magnesium sulfate and distill twice in a good distillation column under reduced pressure [b.p. about 80 °C at 0.27 kPa (2 torr)]. The *n*-octanol produced should be at least 99.9% pure. Alternatively, a grade equivalent to Fisher Scientific Co. No. A–402 ''Certified Octanol–1'' can be used. Reagent-grade water shall be used throughout the test procedure, such as ASTM Type II water, or an equivalent grade, as described in paragraph (c)(1)(ii) of this section.

(ii) *Presaturated water*. Prepare presaturated water with *n*-octanol to minimize the depletion of *n*-octanol from the column when measuring the $K_{ow}$of a test chemical. This is very important when the test chemical is lipophilic and the $\log_{10}K_{ow} \leq 4$.

(3) *Performance of the test*. Initially, an approximately 1.0% (w/w) solution of the test substance in *n*-octanol is prepared. Precise measurement of the solute concentration in this solution is required for the K_{ow}calculation. Subsequently, the 1.0% (w/w) solution is coated on the generator column and using either Procedure A or Procedure B as described in paragraphs (c)(3)(iii) and (c)(3)(iv) of this section, the molar concentration of the test substance in reagent-grade water is determined.

(i) *Test solution*. The test solution consists of an approximately 1.0% (w/w) solution of the test substance in *n*-octanol. A sufficient quantity (about 10–20 milliliter (mL)) of the test solution should be prepared to coat the generator column. The solution is prepared by accurately weighing out, using a tared bottle, quantities of both the test substance and *n*-octanol required to make a 1.0% (w/w) solution. When the weights are measured precisely (to the nearest 0.1 milligram (mg)), knowing the density of *n*-octanol (0.827 gram (g)/mL at 25 °C), then the molar concentration of the test substance in the *n*-octanol is sufficiently accurate for the purposes of the test procedure. If desired, however, a separate analytical determination (e.g., by GC, or any other reliable analytical method) may be used to check the concentration in the test solution. If storage is required, the test solution should be kept stoppered to prevent volatilization of the test chemical.

(ii) *Test procedures*. Prior to the determination of the K_{ow} of the test chemical, two procedures shall be followed:

(A) The saturated aqueous solution leaving the generator column shall be tested for the presence of an emulsion, using a Tyndall procedure (i.e. light scattering). If colloids are present, they must be removed prior to injection into the extractor column by lowering the flow rate of water.

(B) The efficiency of removal of the solute (the test chemical) by solvent extraction from the extractor column shall be determined and used in the determination of the K_{ow} of the test chemical.

(iii) *Procedure A—HPLC method.* (A) Procedure A covers the determination of the aqueous solubility of compounds which absorb in the UV. Two reciprocating piston pumps deliver the mobile phase (water or solvent/water mixture) through two 6-port high-pressure rotary valves and a 30×0.6 cm C_{18} analytical column to a UV absorption detector operating at a suitable wavelength. Chromatogram peaks are recorded and integrated with a recording integrator. One of the 6-port valves is the sample injection valve used for injecting samples of standard solutions of the solute in an appropriate concentration for determining RFs or standard solutions of basic chromate for determining the sample-loop volume. The other 6-port valve in the system serves as a switching valve for the extractor column which is used to remove solute from the aqueous solutions. The HPLC analytical system is shown schematically in the following figure 3:

FIGURE 3—SCHEMATIC OF HPLC—GENERATOR COLUMN FLOW SYSTEM

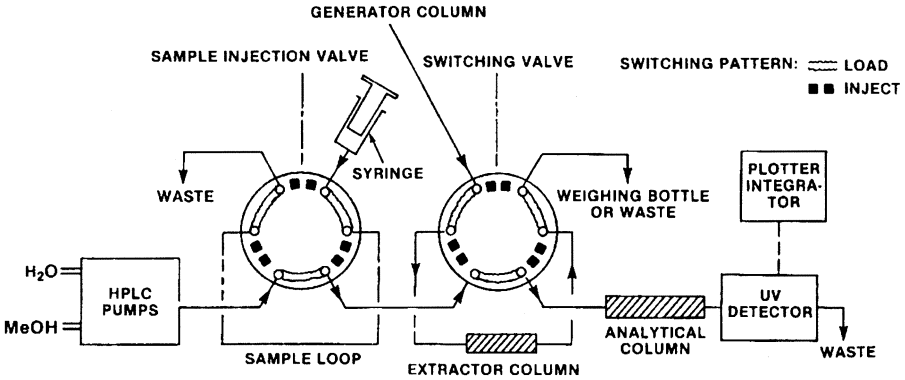

(B) The general procedure for analyzing the aqueous phase after equilibration is as follows; a detailed procedure is given in paragraph (c)(3)(iii)(C)(*4*) of this section:

(*1*) Direct the aqueous solution from the generator column to ''Waste'' in figure 3 in paragraph (c)(3)(iii)(A) of this section with the switching valve in the inject position in order to equilibrate internal surfaces with the solution, thus insuring that the analyzed sample would not be depleted by solute adsorption on surfaces upstream from the valve.

(*2*) At the same time, water is pumped from the HPLC pumps in order to displace the solvent from the extractor column.

(*3*) The switching valve is next changed to the load position to divert a sample of the solution from the generator column through the extractor column, and the liquid leaving the extractor column is collected in a tared weighing bottle. During this extraction step, the HPLC mobile phase is changed to a solvent/water mixture to condition the analytical column.

(*4*) After the desired volume of sample is extracted, the switching valve is returned to the inject position for elution from the extractor column and

analysis. Assuming that all of the solute was adsorbed by the extractor column during the extraction step, the chromatographic peak represents all of the solute in the extracted sample, provided that the extraction efficiency is 100%. If the extraction efficiency is less than 100%, then the extraction efficiency shall be measured and used to determine the actual amount of the solute extracted.

(*5*) The solute concentration in the aqueous phase is calculated from the peak area, the weight of the extracted liquid collected in the weighing bottle, the extraction efficiency, and the RF.

(C)(*1*) *Determination of the sample-loop volume.* Accurate measurement of the sample loop may be accomplished by using a spectrophotometric method such as the one described in the reference listed in paragraph (e)(6) of this section. For this method, measure absorbance, A_{loop}, at 373 nanometers (nm) for at least three solutions, each of which is prepared by collecting from the sample valve an appropriate number, n, of loopfuls of an aqueous stock solution of K_2CrO_4 (1.3% by weight) and diluting to 50 mL with 0.2% KOH. (For a 20 μL loop, use n = 5; for a 50 μL loop, use n = 2.) Also measure the absorbance, A_{stock}, of the same stock solution after diluting 1:500 with 0.2% KOH. Calculate the loop volume to the nearest 0.1 μL using the relation:

Equation 2:

$$V_{loop} = \left(A_{loop}/A_{stock}\right)\left(10^{-4}/n\right)$$

(*2*) *Determination of the RF.* (*i*) For all determinations adjust the mobile phase solvent/water ratio and flow rate to obtain a reasonable retention time on the HPLC column. For example, typical concentrations of organic solvent in the mobile phase range from 50 to 100% while flow rates range from 1 to 3 mL/minutes (min); these conditions often give a 3 to 5 min retention time.

(*ii*) Prepare standard solutions of known concentrations of the solute in a suitable solvent. Concentrations must give a recorder response within the maximum response of the detector. Inject samples of each standard solution into the HPLC system using the calibrated sample loop. Obtain an average peak area from at least three injections of each standard sample at a set detector absorbance unit full scale (AUFS), i.e., at the same absorbance scale attenuation setting.

(*iii*) Calculate the RF from the following equation:

Equation 3:

$$\text{Response Factor (RF)} = \frac{\text{Concentration mol/L}}{\left(\text{Average Area}\right)\left(\text{AUFS}\right)}$$

(*3*) *Loading of the generator column.* (*i*) The design of the generator column was described in paragraph (c)(1)(i) of this section and is shown in figure 1 in paragraph (c)(1)(i)(A)(*2*)(*i*) of this section. To pack the column, a plug of silanized glass wool is inserted into one end of the 6 mm pyrex tubing. Silanized diatomaceous silica support (about 0.5g of 100–120 mesh Chromosorb W chromatographic support material) is poured into the tube with tapping and retained with a second plug of silanized glass wool.

(*ii*) The column is loaded by pulling the test solution through the dry support with gentle suction and then allowing the excess solution to drain out. After loading the column, draw water up through the column to remove any entrapped air.

(*4*) *Analysis of the solute.* Use the following procedure to collect and analyze the solute:

(*i*) With the switching valve in figure 3 in paragraph (c)(3)(iii)(A) of this section in the inject position (i.e., water to waste), pump water through the generator column at a flow rate of approximately 1 mL/min for approximately 15 min to bring the system into

equilibrium. Pump water to the generator column by means of a minipump or pressurized water reservoir as shown in the following figure 4:

FIGURE 4—WATER RESERVOIR FOR GC METHOD

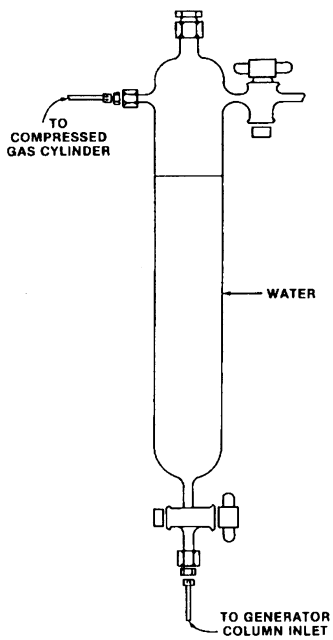

(*ii*) Flush out the organic solvent that remains in the system from previous runs by changing the mobile phase to 100% H_2O and allowing the water to reach the HPLC detector, as indicated by a negative reading. As soon as this occurs, place a 25 mL weighing bottle (weighed to the nearest mg) at the waste position and immediately turn the switching valve to the load position.

(*iii*) Collect an amount of water from the generator column (as determined by trial and error) in the weighing bottle, corresponding to the amount of solute adsorbed by the extractor column that gives a reasonable detector response. During this extraction step, switch back to the original HPLC mobile phase composition, i.e., solvent/water mixture, to condition the HPLC analytical column.

(*iv*) After the desired volume of sample has been extracted, turn the switching valve back to the inject position in figure 3 in paragraph (c)(3)(iii)(A) of this section. As soon as the switching valve is turned to the inject position, remove the weighing bottle, cap it and replace it with the waste container; at the same time turn on the recording integrator. The solvent/water mobile phase will elute the solute from the extractor column and transfer the solute to the HPLC analytical column.

(*v*) Determine the weight of water collected to the nearest mg and record the corresponding peak area. Using the same AUFS setting repeat the analysis of the solute at least two more times and determine the average ratio of peak area to grams of water collected. In this equation, S = solubility (M), RF = response factor, V_{loop} = sample-loop volume (L), and R = ratio of area to grams of water. Calculate the solute solubility in water using the following equation:

Equation 4:

$$S = (997\ g/L)(RF)(V_{loop})(AUFS)(R)$$

(iv) *Procedure B—GC Method.* In the GC method, or any other reliable quantitative method, aqueous solutions from the generator column enter a collecting vessel in figure 2 in paragraph (c)(1)(i)(A)(*2*)(*ii*) of this section containing a known weight of extracting solvent which is immiscible in water. The outlet of the generator column is positioned such that the aqueous phase always enters below the extracting solvent. After the aqueous phase is collected, the collecting vessel is stoppered and the quantity of aqueous phase is determined by weighing. The solvent and the aqueous phase are equilibrated by slowly rotating the collecting vessel. A small amount of the extracting solvent is then removed and injected into a GC equipped with an appropriate detector. The solute concentration in the aqueous phase is determined from a calibration curve constructed using known concentrations of the solute. The extraction efficiency of the solvent shall be determined in a separate set of experiments.

(A) *Determination of calibration curve.* (*1*) Prepare solute standard solutions of

concentrations covering the expected range of the solute solubility. Select a column and optimum GC operating conditions for resolution between the solute and solvent and the solute and extracting solvent. Inject a known volume of each standard solution into the injection port of the GC. For each standard solution determine the average of the ratio R of peak area to volume (in μL) for the chromatographic peak of interest from at least three separate injections.

(*2*) After running all the standard solutions, determine the coefficients, a and b, using linear regression analysis on the equation of concentration (C) vs. R in the form:

Equation 5:

$$C = aR + b$$

(B) *Loading of the generator column.* The generator column is packed and loaded with solute in the same manner as for the HPLC method in paragraph (c)(3)(iii) of this section. As shown in figure 2 in paragraph (c)(1)(i)(A)(*2*)(*ii*) of this section, attach approximately 20 cm of straight stainless steel tubing to the bottom of the generator column. Connect the top of the generator column to a water reservoir in figure 4 in paragraph (c)(3)(iii)(C)(*4*)(*i*) of this section using teflon tubing. Use air or nitrogen pressure (5 PSI) from an air or nitrogen cylinder to force water from the reservoir through the column. Collect water in an Erlenmeyer flask for approximately 15 min while the solute concentration in water equilibrates; longer time may be required for less soluble compounds.

(C) *Collection and extraction of the solute.* During the equilibration time, add a known weight of extracting solvent to a collection vessel which can be capped. The extracting solvent should cover the bottom of the collection vessel to a depth sufficient to submerge the collecting tube but still maintain 100:1 water/solvent ratio. Record the weight (to the nearest mg) of a collection vessel with cap and extracting solvent. Place the collection vessel under the generator column so that water from the collecting tube enters below the level of the extracting solvent in figure 2 in paragraph (c)(1)(i)(A)(*2*)(*ii*) of this section. When the collection vessel is filled, remove it from under the generator column, replace cap, and weigh the filled vessel. Determine the weight of water collected. Before analyzing for the solute, gently rotate the collection vessel contents for approximately 30 min, controlling the rate of rotation so as not to form an emulsion; rotating the flask end over end five times per minute is sufficient. The extraction efficiency of the solvent shall be determined in a separate set of experiments.

(D) *Analysis of the solute.* (*1*) After rotating, allow the collection vessel to stand for approximately 30 min; then remove a known volume of the extracting solvent from the vessel using a microliter syringe and inject it into the GC. Record the ratio of peak area to volume injected and, from the regression equation of the calibration line, determine the concentration of solute in the extracting solvent. If the extraction efficiency is not 100%, the measured extraction efficiency shall be used to obtain the correct concentration of solute extracted. In this equation, C_{es} is the molar concentration of solute in extracting solvent, d_{H_2O} and d_{es} are the densities in grams per milliliter of water and extracting solvent, respectively, and g_{es} and g_{H_2O} are the grams of extracting solvent and water, respectively, contained in the collection vessels. The molar concentration of solute in water C(M) is determined from the following equation:

Equation 6:

$$C(M) = (C_{es})\left[d_{H_2O}/d_{es}\right]\left[g_{es}/g_{H_2O}\right]$$

(*2*) Make replicate injections from each collecting vessel to determine the average solute concentration in water for each vessel. To make sure the generator column has reached equilibrium, run at least two additional (for a total of three) collection vessels and analyze the extracted solute as described in paragraph (c)(3)(iv)(D)(*1*) of this section. Calculate C(M) from the average solute concentration in the three vessels.

(*3*) If another analytical method is used in place of the GC, then Procedure B, as described in paragraph (c)(3)(iv) of this section, shall be modified and

the new analytical procedure shall be used to determine quantitatively the amount of solute extracted in the extraction solvent.

(v) *Analysis of reference compounds.* Prior to analyzing the test solution, make duplicate runs on at least two of the reference compounds listed in table 1 in paragraph (b)(4)(ii) of this section. When using the reference compounds, follow the same procedure previously described for preparing the test solution and running the test. If the average value obtained for each compound is within 0.1 log unit of the reference value, then the test procedure and HPLC system are functioning properly; if not a thorough checking over of the HPLC and careful adherence to the test procedures should be done to correct the discrepancy.

(vi) *Modification of procedures for potential problems—Decomposition of the test compound.* If the test compound decomposes in one or more of the aqueous solvents required during the period of the test at a rate such that an accurate value for water solubility cannot be obtained, then it will be necessary to carry out detailed transformation studies, such as hydrolysis studies. If decomposition is due to aqueous photolysis, then it will be necessary to carry out the studies in the dark, under red or yellow lights, or by any other suitable method to eliminate this transformation process.

(d) *Data and reporting*—(1) *Test report.* (i) For the test solution, report the weights to the nearest 0.1 mg of the test substance and *n*-octanol. Also report the weight percent and molar concentration of the test substance in the *n*-octanol; the density of *n*-octanol at 25 °C is 0.827 grams per milliliter (gm)/mL.

(ii) For each run provide the molar concentration of the test substance in water for each of three determinations, the mean value, and the standard deviation.

(iii) For each of the three determinations calculate the K_{ow} as the ratio of the molar concentration of the test substance in *n*-octanol to the molar concentration in water. Also calculate and report the mean K_{ow} and its standard deviation. Values of K_{ow} shall be reported as their logarithms ($\log_{10}K_{ow}$).

(iv) Report the temperature (±0.05 °C) at which the generator column was controlled during the test.

(v) For each reference compound report the individual values of $\log_{10}K_{ow}$ and the average of the two runs.

(vi) For compounds that decompose at a rate such that a precise value for the solubility cannot be obtained, provide a statement to that effect.

(2) *Specific analytical, calibration, and recovery procedures.* (i) For the HPLC method describe and/or report:

(A) The method used to determine the sample-loop volume and the average and standard deviation of that volume.

(B) The average and standard deviation of the RF.

(C) The extraction solvent and the extraction efficiency used.

(D) Any changes made or problems encountered in the test procedures.

(ii) For the GC method report:

(A) The column and GC operating conditions of temperature and flow rate.

(B) The average and standard deviation of the average area per microliter obtained for each of the standard solutions.

(C) The form of the regression equation obtained in the calibration procedure.

(D) The extracting solvent and extraction efficiency used.

(E) The average and standard deviation of solute concentration in each collection vessel.

(F) Any changes made or problems encountered in the test procedure.

(iii) If another approved analytical method is used to determine the concentration of the test chemical in water, then all the important test conditions shall be reported.

(iv) If the concentration of the test substance in *n*-octanol is determined by an independent analytical method such as GC, provide a complete description of the method.

(e) *References.* For additional background information on this test guideline, the following references should be consulted. These references are available at the addresses in § 700.17(b)(1) and (2) of this chapter.

(1) Banerjee, S. et al., Water solubility and octanol/water partition coefficient of organics. Limitation of the solubility-partition coefficient correlation. *Environmental Science and Technology* 14:1227–1229 (1980).

(2) Bruggemann W.A. et al., Reversed-phase thin-layer chromatography of polynuclear aromatic hydrocarbons and chlorinated biphenyls. Relationship with hydrophobicity as measured by aqueous solubility and octanol/water partition coefficient. *Journal of Chromatography* 238: 335–346 (1982).

(3) Chiou, C.T. et al. Partition coefficient and bioaccumulation of selected organic chemicals. *Environmental Science and Technology* 11:475–478 (1977).

(4) Chiou, C.T. and Schmedding, D.W., Partitioning of organic compounds in octanol/water systems. *Environmental Science and Technology* 16:4–10 (1982).

(5) Chiou, C.T et al., Partition equilibria of nonionic organic compounds between soil, organic matter, and water. *Environmental Science and Technology* 17:227–231 (1983).

(6) DeVoe, H. et al. ''Generator Columns and High Pressure Liquid Chromatography for Determining Aqueous Solubilities and Octanol-Water Partition Coefficients of Hydrophobic Substances,'' *Journal of Research of the National Bureau of Standards*, 86:361–366 (1981).

(7) Fujita, T. et al. ''A New Substituent Constant, Derived from Partition Coefficients.'' *Journal of the American Chemical Society*, 86:5175 (1964).

(8) Hansch, C. and Leo, A. 1985 MEDCHEM Project, version 26. Pomona College, Claremont, CA. USA.

(9) Hansch, C. and Leo, A. Medchem Software Manual. CLOGP3 Users Guide. Release 3.32. December 1984. Medicinal Chemistry Project, Pomona College, Claremont, CA.

(10) Hawker, D.W. and Connell, D.W. Octanol-water partition coefficients of polychlorinated biphenyl congeners. *Environmental Science and Technology* 22:382–387 (1988).

(11) May, W.E. et al. ''Determination of the aqueous solubility of polynuclear aromatic hydrocarbons by a coupled column liquid chromatographic technique,'' *Analytical Chemistry*, 50:175–179 (1978).

(12) May, W.E. et al. ''Determination of the Solubility Behavior of Some Polycyclic Aromatic Hydrocarbons in Water,'' *Analytical Chemistry* 50:997–1000 (1978).

(13) Miller, M.M. et al. Aqueous solubilities, octanol/water partition coefficients and entropies of melting of chlorinated benzenes and biphenyls. *Journal of Chemical and Engineering Data* 29:184–190 (1984).

(14) Neely, W.B. et al. Partition Coefficient to Measure Bioconcentration Potential of Organic Chemicals in Fish, *Environmental Science Technology*, 8:113–115 (1974).

(15) Rappaport, R.A. and Eisenrich, S.J. Chromatographic determination of octanol-water partition coefficients (K_{ow}'s) for 58 polychlorinated biphenyl congeners. *Environmental Science and Technology* 18:163–170 (1984).

(16) Tewari, Y.B. et al. Aqueous solubility and octanol/water partition coefficients of organic compounds at 25 °C. *Journal of Chemical and Engineering Data* 27:451–454 (1982).

(17) Tulp, M.T.M. and Hutzinger, O. Some thoughts on aqueous solubilities and partition coefficients of PCB, and the mathematical correlation between bioaccumulation and physio-chemical properties. *Chemosphere* 10:849–860 (1978).

(18) Veith, G.D. et al. A rapid method for estimating $\log_{10}$ P for organic chemicals, *Water Research* 13:43–47 (1979).

(19) Wasik, S.P. et al. Octanol/water partition coefficient and aqueous solubilities of organic compounds, Report NBSIR 81–2406 (1981). National Bureau of Standards, U.S. Department of Commerce, Washington, DC.

(20) Woodburn, K.B. Measurement and application of the octanol/water partition coefficients for selected polychlorinated biphenyls. Master's Thesis (1982), University of Wisconsin at Madison, Madison, WI.

(21) Woodburn, K.B. et al. Generator column determination of octanol/water partition coefficients for selected polychlorinated biphenyl congeners. *Environmental Science and Technology* 18:457–459 (1984).

(22) ASTM D 1193–91 (Approved Sep 15, 1991), ''Standard Specification for Reagent Water.'' American Society for Testing and Materials (ASTM), 1916 Race St., Philadelphia, PA 19103.

[65 FR 78751, Dec. 15, 2000, as amended at 77 FR 46293, Aug. 3, 2012]

§ 799.6784 TSCA water solubility: Column elution method; shake flask method.

(a) *Scope*—(1) *Applicability*. This section is intended to meet the testing requirements of the Toxic Substances Control Act (TSCA) (15 U.S.C. 2601).

(2) *Source*. The source material used in developing this TSCA test guideline is the Office of Pollution Prevention, Pesticides and Toxics (OPPTS) harmonized test guideline 830.7840 (March 1998, revised final guideline). This source is available at the address in paragraph (f) of this section.

(b) *Introductory information*—(1) *Prerequisites*. Suitable analytical method, structural formula, vapor pressure curve, dissociation constant, and hydrolysis independence of pH (preliminary test).

(2) *Coefficient of variation*. The coefficient of variation on the mean values reported by the participants of the Organization for Economic Cooperation and Development (OECD) Laboratory Intercomparison Testing, Part I, 1979, appeared to be dependent on the chemicals tested and the test temperatures; it ranges from 0.05 to 0.34 for the column elution method, and from 0.03 to 1.12 for the flask method.

(3) *Qualifying statements*. (i) The method is not applicable to volatile substances. Care should be taken that the substances examined are as pure as possible and stable in water. It must be ascertained that the identity of the substance is not changed during the procedure.

(ii) The column elution method is not suitable for volatile substances. The carrier material used here may not yet be optimal. This method is intended for material with solubilities below approximately 10^{-2} gram/Liter (g/L).

(iii) The flask method is intended for materials with solubility above 10^{-2} g/L. It is not applicable to volatile substances; this method may pose difficulties in the case of surface-active materials.

(c) *Method*—(1) *Introduction, purpose, scope, relevance, application, and limits of test*. (i) A solution is a homogeneous mixture of different substances in a solvent. The particle sizes of the dispersed substances are of the same magnitude as molecules and ions; therefore, the smallest volumes which can be obtained from a solution are always of uniform composition.

(ii) Solubility in water is a significant parameter because:

(A) The spatial and temporal movement (mobility) of a substance is largely determined by its solubility in water.

(B) Water soluble substances gain ready access to humans and other living organisms.

(C) The knowledge of the solubility in water is a prerequisite for testing biological degradation and bioaccumulation in water and for other tests.

(iii) No single method is available to cover the whole range of solubilities in water, from relatively soluble to very low-soluble chemicals. A general test guideline for the determination of the solubility in water must include methods which cover the whole range of water soluble substances. Therefore, this section includes two methods:

(A) One which applies to substances with low solubilities ($<10^{-2}$ g/L), referred to as the ''column elution method.''

(B) The other which applies to substances with higher solubilities ($\leq 10^{-2}$ g/L), referred to as the ''flask method.''

(2) *Definition*. The solubility in water of a substance is specified by the saturation mass concentration of the substance in water and is a function of temperature. The solubility in water is specified in units of weight per volume of solution. The SI-unit is killogram/meter $(kg/m)^3$; g/L may also be used.

(3) *Reference substances*. The reference substances need not be employed in all cases when investigating a new substance. They are provided primarily so that calibration of the method may be performed from time to time and to offer the chance to compare the results when another method is applied. The values presented in table 1 of this section are not necessarily representative

of the results which can be obtained with this test method as they have been derived from an earlier version of the test method.

TABLE 1—DATA FOR REFERENCE SUBSTANCES

Method	T, °C	Mean (milligram (mg)/L)	Range (mg/L)	No. of labs
Fluoranthene				
Elution method	15	0.275	0.104 to 0.920	6
	25	0.373	0.198 to 1.050	7
Hexachlorobenzene				
Elution method	15	9.21×10^{-3}	2.06×10^{-3} to 2.16×10^{-2}	6
	25	9.96×10^{-3}	1.19×10^{-3} to 2.31×10^{-2}	7
γ-Hexachlorocyclohexane				
Elution method	15	6.50	4.43 to 10.5	6
	25	9.20	6.64 to 14.5	7
2,4-Dichlorophenoxyacetic acid				
Flask method	15	0.633	0.380 to 0.764	5
	25	0.812	0.655 to 0.927	5
Mercury(II) chloride:				
Flask method	15	53.0	47.7 to 56.5	4
	25	66.4	58.3 to 70.4	4
4-Nitrophenol:				
Flask method	15	9.95	8.88 to 10.9	6
	25	14.8	13.8 to 15.9	6

(4) *Principle of the test methods.* The approximate amount of the sample and the time necessary to achieve the saturation mass concentration should be determined in a simple preliminary test.

(i) *Column elution method.* This method is based on the elution of a test substance with water from a microcolumn which is charged with an inert carrier material such as glass beads, silica gel, or sand, and an excess of test substance. The water solubility is determined when the mass concentration of the eluate is constant. This is shown by a concentration plateau as a function of time in the following figure 1:

FIGURE 1—CONCENTRATION VERSUS TIME OF SUBSTANCE IN THE ELUATE

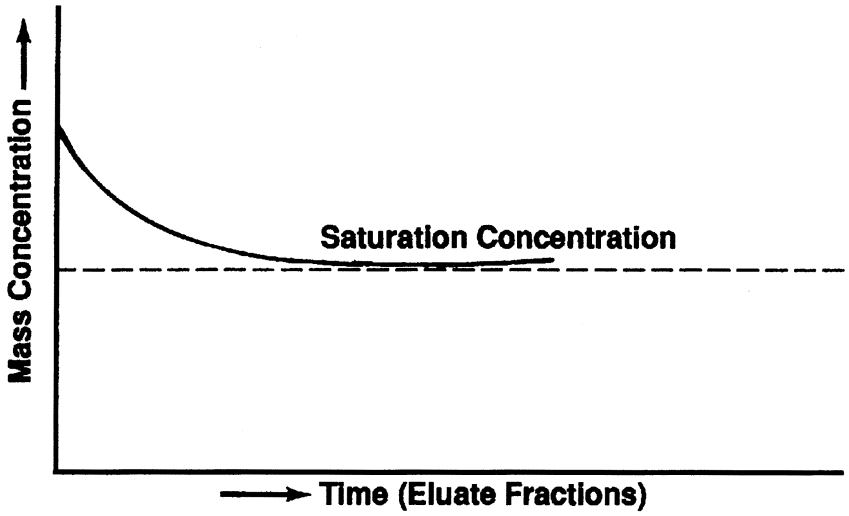

(ii) *Flask method*. In this method, the substance (solids must be pulverized) is dissolved in water at a temperature somewhat above the test temperature. When saturation is achieved, the mixture is cooled and kept at the test temperature, stirring as long as necessary to reach equilibrium. Such a procedure is described in the reference listed in paragraph (f)(2) of this section. Subsequently, the mass concentration of the substance in the aqueous solution, which must not contain any undissolved particles, is determined by a suitable analytical method.

(5) *Quality criteria*—(i) *Repeatability*. For the column elution method <30% is acceptable; for the flask method <15% should be observed.

(ii) *Sensitivity*. This depends upon the method of analysis, but mass concentration determinations down to at least 10^{-6} g/L can be determined.

(iii) *Specificity*. These methods should only be applied to:

(A) Pure substance.

(B) Substances that are stable in water.

(C) Slightly soluble substances, i.e. $<10^{-2}$ g/L for the column elution method.

(D) Organic substances for the column elution method.

(iv) *Possibility of standardization*. These methods can be standardized.

(d) *Description of the test procedures*—(1) *Preparations*—(i) *Apparatus*—(A) *Column elution method*. (*1*) The schematic arrangement of the system is presented in the following figure 2:

FIGURE 2—SCHEMATIC TEST ARRANGEMENT

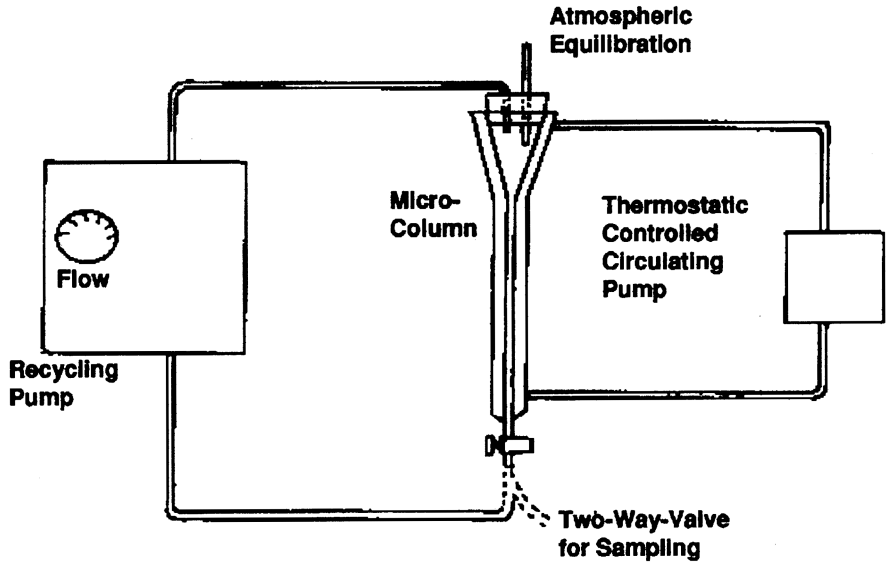

(*2*) Although any size is acceptable, provided it meets the criteria for reproducibility and sensitivity. The column should provide for a head space of at least five bed-volumes of water and a minimum of five samples. Alternatively, the size can be reduced if make-up solvent is employed to replace the initial five bed-volumes removed with impurities. A suitable micro-column is shown in the following figure 3:

FIGURE 3—MICROCOLUMN (ALL DIMENSIONS IN MILLIMETERS)

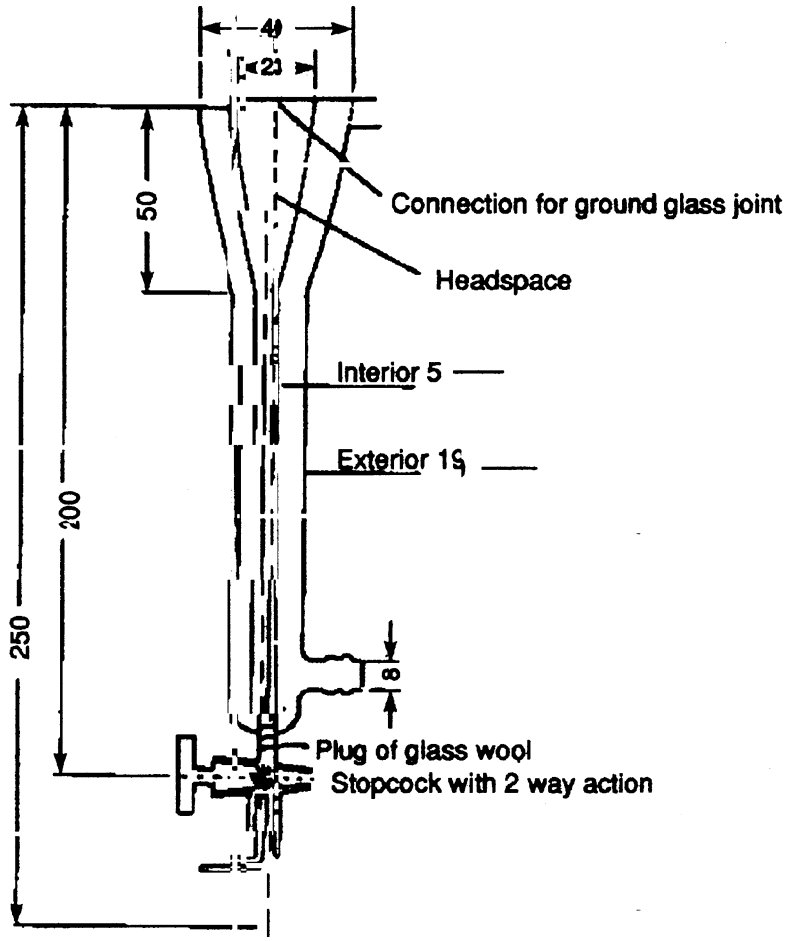

(*3*) The column should be connected to a recycling pump capable of controlling flows of approximately 25 mL/hours (h). The pump is connected with polytetrafluoroethylene and/or glass connections. The column and pump, when assembled, should have provision for sampling the effluent and equilibrating the head space at atmospheric pressure. The column material is supported with a small (5 millimeter (mm)) plug of glass wool, which must also serve to filter particles.

(B) *Flask method.* For the flask method, the following material is needed:

(*1*) Normal laboratory glassware and instrumentation.

(*2*) A device suitable for the agitation of solutions under controlled constant temperatures.

(*3*) A centrifuge (preferably thermostatted), if required with emulsions.

(*4*) Equipment for analytical determinations.

(2) *Reagents.* The substance to be tested should be as pure as possible, particularly in the flask method where purification is not provided. The carrier material for the column elution

method should be inert. Possible materials which can be employed are glass beads and silica. A suitable volatile solvent of analytical reaction quality should be used to apply the test substance to the carrier material. Double distilled water from glass or quartz apparatus should be employed as the eluent or solvent. Water directly from an ion exchanger must not be used.

(3) *Test conditions.* The test is preferably run at 20 ±0.5 °C (293 °K). If temperature dependence is suspected in the solubility (≤3%/ °C), two other temperatures should also be used—both differing from each other and the initially chosen temperature by 10 °C. In this case the temperature control should be ±0.1 °C. One of these additional temperatures should be below the initial temperature. The chosen temperature(s) should be kept constant in all parts of the equipment (including the leveling vessel).

(4) *Performance of the tests*—(i) *Preliminary test.* (A) To approximately 0.1 g of the sample (solid substances must be pulverized) in a glass-stoppered 10 milliliter (mL) graduated cylinder, increasing volumes of distilled water at room temperature are added according to the steps shown in Table 2 of this section:

TABLE 2—DETERMINATION OF SOLUBILITY

Solubility data	step 1	step 2	step 3	step 4	step 5	step 6	step 7
Total volume H_2O added (mL)	0.1	0.5	1	2	10	100	≤100
Approximate solubility (g/L)	≤1,000	200	100	50	10	1	<1

(B) After each addition of water to give the indicated total volume, the mixture is shaken vigorously for 10 min and is visually checked for any undissolved parts of the sample. If, after a total of 10 mL of water has been added (step 5), the sample or parts of it remain undissolved, the contents of the measuring cylinder is transferred to a 100 mL measuring cylinder which is then filled up with water to 100 mL (step 6) and shaken. At lower solubilities the time required to dissolve a substance can be considerably long (24 h should be allowed). The approximate solubility is given in the table under that volume of added water in which complete dissolution of the sample occurs. If the substance is still apparently insoluble, further dilution should be undertaken to ascertain whether the column elution or flask solubility method should be used.

(ii) *Column elution*—(A) *Apparatus.* (*1*) The equipment is arranged as shown in figures 2 and 3 in paragraphs (d)(1)(i)(A)(*1*) and (d)(1)(i)(A)(*2*) of this section. Approximately 600 milligrams (mg) of carrier material is weighed and transferred to a 50 mL round-bottom flask. A suitable, weighed amount of test substance is dissolved in the chosen solvent, and an appropriate amount of the test substance solution is added to the carrier material. The solvent must be completely evaporated, e.g. in a rotary evaporator; otherwise water saturation of the carrier is not achieved due to partition effects on the surface of the carrier.

(*2*) The loading of carrier material may cause problems (erroneous results) if the test substance is deposited as an oil or a different crystal phase. The problem should be examined experimentally.

(*3*) The loaded carrier material is allowed to soak for about 2 h in approximately 5 mL of water, and then the suspension is added to the microcolumn. Alternatively, dry loaded carrier material may be poured in the microcolumn, which has been filled with water and then equilibrated for approximately 2 h.

(B) *Test procedure.* The elution of the substance from the carrier material can be carried out in two different ways: Leveling vessel or circulating pump. The two principles should be used alternatively.

(*1*) Leveling vessel, see figure 3 in paragraph (d)(1)(i)(A)(*2*) and figure 4 in paragraph (d)(4)(iii) of this section.

(*i*) The connection to the leveling vessel is made by using a ground glass joint which is connected by teflon tubing. It is recommended that a flow rate

of approximately 25 mL/h be used. Successive eluate fractions should be collected and analyzed by the chosen method.

(*ii*) Fractions from the middle eluate range where the concentrations are constant (±30%) in at least five consecutive fractions are used to determine the solubility in water.

(*iii*) A second run is to be performed at half the flow rate of the first. If the results of the two runs are in agreement, the test is satisfactory; if there is a higher apparent solubility with the lower flow rate, then the halving of the flow rate must continue until two successive runs give the same solubility.

(*2*) Circulating pump, see figures 2 and 3 in paragraphs (d)(1)(i)(A)(*1*) and (d)(1)(i)(A)(*2*) of this section.

(*i*) With this apparatus, the microcolumn must be modified. A stopcock with 2–way action must be used, see figure 3 in paragraph (d)(1)(i)(A)(*2*) of this section). The circulating pump can be, e.g. a peristaltic pump (be careful that no contamination and/or adsorption occurs with the tube material) or a membrane pump.

(*ii*) The flow through the column is started. It is recommended that a flow rate of approximately 25 mL/h be used (approximately 10 bed volumes per h for the described column). The first five-bed volumes (minimum) are discarded to remove water soluble impurities.

(*iii*) Following this, the recycling pump is connected and the apparatus allowed to run until equilibration is established, as defined by five successive samples whose concentrations do not differ by more than 30% in a random fashion (see paragraph (f)(2) of this section). These samples should be separated from each other by time intervals corresponding to the passage of at least 10 bed-volumes of the eluent.

(*3*) In both cases (using a circulation pump or a leveling vessel) the fractions should be checked for the presence of colloidal matter by examination for the Tyndall effect (light scattering). Presence of such particles invalidates the results, and the test should be repeated with improvements in the filtering action of the column. The pH of each sample should be recorded. A second run should be performed at the same temperature.

(iii) *Flask method: Test procedure.* The quantity of material necessary to saturate the desired volume of water is estimated from the preliminary test. The volume of water required will depend on the analytical method and the solubility range. About five times the quantity of material determined in paragraph (d)(4)(i)(A) of this section is weighed into each of three glass vessels fitted with glass stoppers (e.g. centrifuge tubes, flasks). The chosen volume of water is added to each vessel, and the vessels are tightly stoppered. The closed vessels are then agitated at 30 °C. (A shaking or stirring device capable of operating at constant temperature should be used, *e.g.* magnetic stirring in a thermostatically controlled water bath.) After 1 day, one of the vessels is removed and re-equilibrated for 24 h at the test temperature with occasional shaking. The contents of the vessel are then centrifuged at the test temperature, and the concentration of compound in the clear aqueous phase is determined by a suitable analytical method. The other two flasks are treated similarly after initial equilibration at 30 °C for 2 and 3 days, respectively. If the concentration results from at least the last two vessels agree with the required reproducibility, the test is satisfactory. The whole test should be repeated, using longer equilibration times if the results from vessels one, two, and three show a tendency to increasing values. The arrangement of the apparatus is shown in the following figure 4:

FIGURE 4—TEST ARRANGEMENT FOR THE DETERMINATION OF SOLUBILITY IN WATER OF SLIGHTLY SOLUBLE, LOW VOLATILITY ORGANIC SUBSTANCES

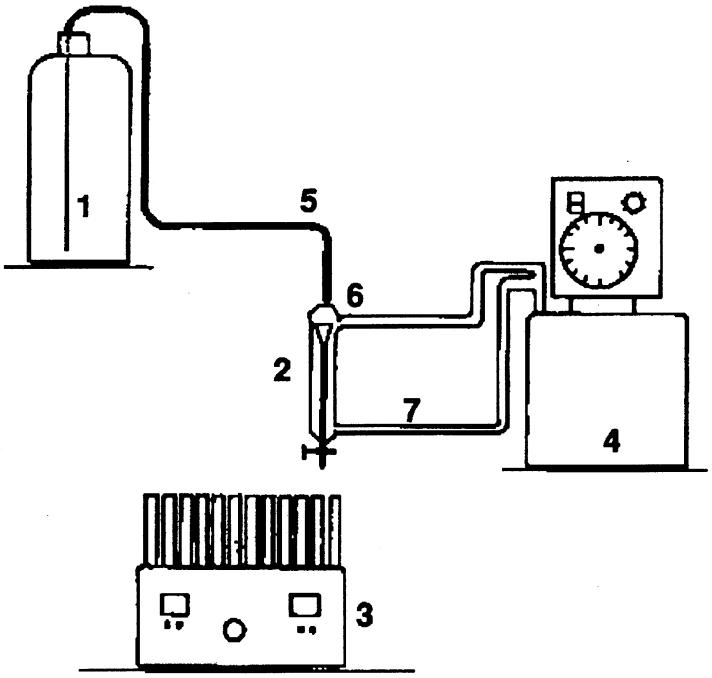

1 = Leveling vessel (e.g. 2.5 L chemical flask)

2 = Column (see figure 3 in paragraph (d)(1)(i)(A)(*2*) of this section)

3 = Fraction accumulator

4 = Thermostat

5 = Teflon tubing

6 = Glass stopper

7 = Water line (between thermostat and column, inner diameter: approximately 8 mm)

(iv) *Analysis.* A substance-specific analytical method is required for these determinations, since small amounts of soluble impurities can cause large errors in the measured solubility. Examples of such methods are gas or liquid chromatography, titration methods, photometric methods, and polarographic methods.

(e) *Data and reporting*—(1) *Column elution method*—(i) *Treatment of results.* The mean value from at least five consecutive samples taken from the saturation plateau (figure 1 in paragraph (c)(4)(i) of this section) should be determined for each run, as should the standard deviation. A comparison should be made between the two means to ensure that they agree with a repeatability of less than 30%.

(ii) *Test report.* The report should contain an indication of the results of the preliminary test plus the following information:

(A) The individual concentrations, flow rates and pHs of each samples.

(B) The means and standard deviations from at least five samples from the saturation plateau of each run.

(C) The average of the two successive, acceptable runs.

(D) The temperature of the runs.

(E) The method of analysis employed.

(F) The nature of the carrier material employed.

(G) Loading of carrier material.

(H) Solvent used.

(I) Statement that the identity of the substance in the saturated solution has been proved.

(2) *Flask method*—(i) *Treatment of results*. The individual results should be given for each of the three flasks and those results deemed to be constant (repeatability <15%) should be averaged and given in units of mass per volume of solution. This may require the conversion of mass units to volume units, using the density when the solubility is very high (100 g/L).

(ii) *Test report*. The report should include the following information:

(A) The individual analytical determinations and the average where more than one value was determined for each flask.

(B) The average of the value for the different flasks which were in agreement.

(C) The test temperature.

(D) The analytical method employed.

(f) *References*. For additional information on this test guideline, the following references should be consulted. These references are available at the addresses in §700.17(b)(1) and (2) of this chapter.

(1) Veith, G.D. and V.M. Comstock. Apparatus for continuously saturating water with hydrophobic organic chemicals. *Journal of the Fishing Research Board of Canada* 32:1849–1851 (1975).

(2) *Organization for Economic Cooperation and Development*, Guidelines for The Testing of Chemicals, OECD 105, Water Solubility (Column Elution Method—Shake Flask Method), OECD, Paris, France (1981).

[65 FR 78751, Dec. 15, 2000, as amended at 77 FR 46293, Aug. 3, 2012]

§ 799.6786 TSCA water solubility: Generator column method.

(a) *Scope*—(1) *Applicability*. This section is intended to meet the testing requirements of the Toxic Substances Control Act (TSCA) (15 U.S.C. 2601).

(2) *Source*. The source material used in developing this TSCA test guideline is the Office of Pollution Prevention, Pesticides and Toxics (OPPTS) harmonized test guideline 830.7860 (March 1998, revised final guideline). The source is available at the address in paragraph (e) of this section.

(b) *Introduction*—(1) *Purpose*. (i) The water solubility of a chemical is defined as the equilibrium concentration of the chemical in a saturated aqueous solution at a given temperature and pressure. The aqueous phase solubility is an important factor in governing the movement, distribution, and rate of degradation of chemicals in the environment. Substances that are relatively water soluble are more likely to be widely distributed by the hydrologic cycle than those which are relatively insoluble. Furthermore, substances with higher water solubility are more likely to undergo microbial or chemical degradation in the environment because dissolution makes them ''available'' to interact and, therefore, react with other chemicals and microorganisms. Both the extent and rate of degradation via hydrolysis, photolysis, oxidation, reduction, and biodegradation depend on a chemical being soluble in water (i.e., homogeneous kinetics).

(ii) Water provides the medium in which many organisms live, and water is a major component of the internal environment of all living organisms (except for dormant stages of certain life forms). Even organisms which are adapted to life in a gaseous environment require water for normal functioning. Water is thus the medium through which most other chemicals are transported to and into living cells. As a result, the extent to which chemicals dissolve in water will be a major determinant for movement through the environment and entry into living systems.

(iii) The water solubility of a chemical also has an effect on its sorption into and desorption from soils and sediments, and on volatilization from aqueous media. The more soluble a chemical substance is, the less likely it is to sorb to soils and sediments and the less likely it is to volatilize from water. Finally, the design of most chemical tests and many ecological and health tests requires precise knowledge of the water solubility of the chemical to be tested.

(2) *Definitions*. The following definitions apply to this section.

Concentration (C) of a solution is the amount of solute in a given amount of

solvent or solution and can be expressed as a weight/weight or weight/volume relationship. The conversion from a weight relationship to one of volume incorporates density as a factor. For dilute aqueous solutions, the density of the solvent is approximately equal to the density of the solution; thus, concentrations expressed in milligrams per liter (mg/L) are approximately equal to 10^{-3} g/10^3 g or parts per million (ppm); those expressed in micrograms per liter (μg/L) are approximately equal to 10^{-6} g/10^3 g or parts per billion (ppb). In addition, concentration can be expressed in terms of molarity, normality, molality, and mole fraction. For example, to convert from weight/volume to molarity molecular mass is incorporated as a factor.

Density is the mass of a unit volume of a material. It is a function of temperature, hence the temperature at which it is measured should be specified. For a solid, it is the density of the impermeable portion rather than the bulk density. For solids and liquids, suitable units of measurement are grams per cubic centimeter (g/cm^3). The density of a solution is the mass of a unit volume of the solution and suitable units of measurement are g/cm^3.

Extractor column is used to extract the solute from the saturated solutions produced by the generator column. After extraction onto a chromatographic support, the solute is eluted with a solvent/water mixture and subsequently analyzed by high-pressure liquid chromatography (HPLC), gas chromatography (GC), or any other suitable analytical procedure. A detailed description of the preparation of the extractor column is given in paragraph (c)(1)(i)(D) of this section.

Generator column is used to produce or generate saturated solutions of a solute in a solvent. The column, see figure 1 in paragraph (c)(1)(i)(A) of this section, is packed with a solid support coated with the solute, i.e., the organic compound whose solubility is to be determined. When water (the solvent) is pumped through the column, saturated solutions of the solute are generated. Preparation of the generator column is described in paragraph (c)(1)(i)(A) of this section.

Response factor (RF) is the solute concentration required to give a 1 unit area chromatographic peak or 1 unit output from the HPLC recording integrator at a particular recorder attenuation. The factor is required to convert from units of area to units of concentration. The determination of the RF is given in paragraph (c)(3)(ii)(B)(*2*) of this section.

Sample loop is a 1/16 inch (in) outer diameter (O.D.) (1.6 millimeter (mm)) stainless steel tube with an internal volume between 20 and 50 μL. The loop is attached to the sample injection valve of the HPLC and is used to inject standard solutions into the mobile phase of the HPLC when determining the RF for the recording integrator. The exact volume of the loop must be determined as described in paragraph (c)(3)(ii)(B)(*1*) of this section when the HPLC method is used.

Saturated solution is a solution in which the dissolved solute is in equilibrium with an excess of undissolved solute; or a solution in equilibrium such that at a fixed temperature and pressure, the concentration of the solute in the solution is at its maximum value and will not change even in the presence of an excess of solute.

Solution is a homogeneous mixture of two or more substances constituting a single phase.

(3) *Principle of the test method.* (i) This test method is based on the dynamic coupled column liquid chromatographic (DCCLC) technique for determining the aqueous solubility of organic compounds that was initially developed by May et al. (as described in the references listed in paragraphs (e)(5) and (e)(6) of this section), modified by DeVoe et al. (as described in the reference listed in paragraph (e)(1) of this section), and finalized by Wasik et al. (as described in the reference listed in paragraph (e)(11) of this section). The DCCLC technique utilizes a generator column, extractor column and HPLC coupled or interconnected to provide a continuous closed flow system. Saturated aqueous solutions of the test compound are produced by pumping water through the generator column that is packed with a solid support coated with the compound. The compound is extracted from

the saturated solution onto an extractor column, then eluted from the extractor column with a solvent/water mixture and subsequently analyzed by HPLC using a variable wavelength ultraviolet (UV) detector operating at a suitable wavelength. Chromatogram peaks are recorded and integrated using a recording integrator. The concentration of the compound in the effluent from the generator column, i.e., the water solubility of the compound, is determined from the mass of the compound (solute) extracted from a measured volume of water (solvent).

(ii) Since the HPLC method is only applicable to compounds that absorb in the UV, an alternate GC method, or any other reliable procedure (which must be approved by OCSPP), can be used for those compounds that do not absorb in the UV. In the GC method the saturated solutions produced in the generator column are extracted using an appropriate organic solvent that is subsequently injected into the GC, or any other suitable analytical device, for analysis of the test compound.

(4) *Reference chemicals*. Table 1 of this section lists the water solubilities at 25 °C for a number of reference chemicals as obtained from the scientific literature. The data from Wasik et al. (as described in the reference listed in paragraph (e)(11) of this section), Miller et al. and Tewari et al. (as described in the references listed in paragraphs (e)(7) and (e)(10) of this section, respectively) were obtained from the generator column method. The water solubilities data were also obtained from Mackay et al. and Yalkowski et al. (as described in the references listed in paragraphs (e)(4) and (e)(12) of this section, respectively) and other scientists by the conventional shake flask method. These data have been provided primarily so that the generator column method can be calibrated from time to time and to allow the chemical testing laboratory an opportunity to compare its results with those listed in table 1 of this section. The water solubility values at 25 °C reported by Yalkowski et al. are their preferred values and, in general, represent the best available water solubility data at 25 °C. The testing laboratory has the option of choosing its own reference chemicals, but references must be given to establish the validity of the measured values of the water solubility.

TABLE 1—WATER SOLUBILITIES AT 25 °C OF SOME REFERENCE CHEMICALS

Reference chemical	Water solubility (ppm at 25 °C)		
	Wasik (generator column method)	Yalkowski[1 5]	Other literature references
2-Heptanone	[2]4080	4300	[5]4330
1-Chlorobutane	[2]873	872.9	[7]666
Ethylbenzene	[2]187	208	[7]162
1,2,3-Trimethylbenzene	[2]65.5	75.2	[7]48.2
Biphenyl	[3 10]6.71	7.48	[8]6.62
Phenanthrene	[4]1.002	1.212	—
2,4,6-Trichlorobiphenyl	[3 10]0.226	0.225	[8]0.119
2,3,4,5-Tetrachlorobiphenyl	[3 10]0.0209	0.01396	[8]0.0192
Hexachlorobenzene	—	0.004669	[9]0.00996
2,3,4,5,6-Pentachlorobiphenyl	[3 10]0.00548	0.004016	[8]0.0068

[1] Preferred water solubility at 25 °C by Yalkowski et al. (1990) in paragraph (e)(12) of this section based on a critical review of all the experimental water solubility data published.
[2] Tewari et al. (1982) in paragraph (e)(10) of this section.
[3] Leifer et al. (1983) in paragraph (e)(3) of this section.
[4] May, Wasik, and Freeman (1978, 1978a) in paragraphs (e)(5) and (6) of this section.
[5] Yalkowski et al. (1990) in paragraph (e)(12) of this section.
[6] Hansch et al. (1968) in paragraph (e)(2) of this section.
[7] Sutton and Calder (1975) in paragraph (e)(9) of this section.
[8] Mackay et al. (1980) in paragraph (e)(4) of this section.
[9] The elution chromatographic method from Organization for Economic Cooperation and Development (OECD) (1981) in paragraph (e)(8) of this section.
[10] Miller et al. (1984) in paragraph (e)(7) of this section.

(5) *Applicability and specificity*. (i) Procedures are described in this section to determine the water solubility for liquid or solid compounds. The water solubility can be determined in very pure water, buffer solution for compounds

that reversibly ionize or protonate, or in artificial seawater as a function of temperature (i.e., in the range of temperatures of environmental concern). This section is not applicable to the water solubility of gases.

(ii) This section is designed to determine the water solubility of a solid or liquid test chemical in the range of 1 ppb to 5,000 ppm. For chemicals whose solubility is below 1 ppb, the water solubility should be characterized as ''less than 1 ppb'' with no further quantification. For solubilities greater than 5,000 ppm, the shake flask method should be used, see paragraph (e)(15) of this section.

(c) *Test procedure*—(1) *Test conditions*—(i) *Special laboratory equipment*—(A) *Generator column*. (*1*) Either of two different designs shall be used depending on whether the eluted aqueous phase is analyzed by HPLC in paragraph (c)(3)(ii) of this section or by solvent extraction followed by GC (or any other reliable quantitative) analysis of solvent extract in paragraph (c)(3)(iv) of this section. The design of the generator column is shown in the following figure 1:

FIGURE 1—GENERATOR COLUMN

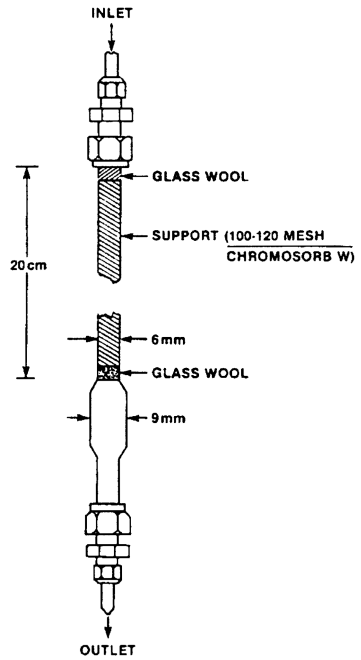

(*2*) The column consists of a 6 mm (¼ in) O.D. pyrex tube joined to a short enlarged section of 9 mm pyrex tubing which in turn is connected to another section of 6 mm (¼ in) O.D. pyrex tubing. Connections to the inlet teflon tubing (⅛ in O.D.) and to the outlet stainless steel tubing (1⁄16 in O.D.) shall be made by means of stainless steel fittings with teflon ferrules. The column

is enclosed in a water jacket for temperature control as shown in the following figure 2:

FIGURE 2—SETUP SHOWING GENERATOR COLUMN ENCLOSED IN A WATER JACKET AND OVERALL ARRANGEMENT OF THE APPARATUS USED IN THE GC METHOD

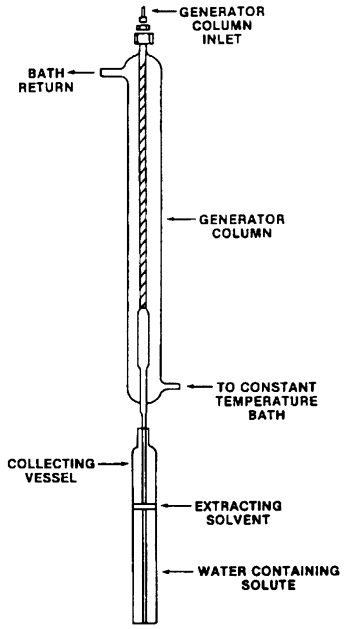

(B) Constant temperature bath with circulation pump-bath and capable of controlling temperature to ±0.05 °C, see paragraph (c)(3) of this section.

(C) HPLC equipped with a variable wavelenth UV absorption detector operating at a suitable wavelength and a recording integrator in paragraph (c)(3)(ii) of this section.

(D) Extractor column—6.6 × 0.6 cm stainless steel tube with end fittings containing 5 μm frits filled with a superficially porous phase packing (Bondapack C^{18}/Corasil: Waters Associates) in paragraph (c)(3)(ii) of this section.

(E) Two 6-port high-pressure rotary switching valves in paragraph (c)(3)(ii) of this section.

(F) Collection vessel—8 × ¾ in section of pyrex tubing with a flat bottom connected to a short section of ⅜ in O.D. borosilicate glass tubing in figure 2 in paragraph (c)(1)(i)(A)(*2*) of this section. The collecting vessel is sealed with a ⅜ in teflon cap fitting in paragraph (c)(3)(iii) of this section.

(G) GC, or any other reliable analytical equipment, which has a detector sensitive to the solute of interest in paragraph (c)(3)(iii) of this section.

(ii) *Purity of water*. Water meeting appropriate American Society for Testing and Materials (ASTM) Type II standards, or an equivalent grade, are recommended to minimize the effects of dissolved salts and other impurities on water solubility. ASTM Type II water is presented in the reference listed in paragraph (e)(13) of this section.

(iii) *Purity of solvents*. All solvents used in this method must be reagent or HPLC grade. Solvents must contain no impurities which could interfere with the determination of the test compound.

(iv) *Seawater*. When the water solubility in seawater is desired, the artificial seawater described in paragraph (c)(2)(ii) of this section must be used.

(v) *Effect of pH on solubility*. For chemicals that reversibly ionize or protonate with a pK_a or pK_b between 3 and 11, experiments must be performed at pH's 5.0, 7.0, and 9.0 using appropriate buffers.

(2) *Preparation of reagents and solutions*—(i) *Buffer solutions*. Prepare buffer solutions as follows:

(A) pH 3.0—to 250 mL of 0.10M potassium hydrogen phosphate add 111 mL of 0.10 M hydrochloric acid; adjust the final volume to 500 mL with reagent grade water.

(B) pH 5.0—to 250 mL of 0.1M potassium hydrogen phthalate add 113 mL of 0.1M sodium hydroxide; adjust the final volume to 500 mL with reagent grade water.

(C) pH 7.0—to 250 mL of 0.1M potassium dihydrogen phosphate add 145 mL of 0.1M sodium hydroxide; adjust the final volume to 500 mL with reagent grade water.

(D) pH 9.0—to 250 mL of 0.075M borax add 69 mL of 0.1M HCl; adjust the final volume to 500 mL with reagent grade water.

(E) pH 11.0—to 250 mL of 0.05 M sodium bicarbonate add 3 mL of 0.10 M

sodium hydroxide; adjust the final volume to 500 mL with reagent grade water.

(ii) Check the pH of each buffer solution with a pH meter at 25 °C and adjust to pH 5.0, 7.0, or 9.0, if necessary. If the pH of the solution has changed by ±0.2 pH units or more after the addition of the test compound, then a more concentrated buffer is required for that pH determination. The sponsor should then choose a more suitable buffer.

(iii) *Artificial seawater*. Add the reagent-grade chemicals listed in table 2 of this section in the specified amounts and order to 890 mL of reagent-grade water. Each chemical shall be dissolved before another one is added.

TABLE 2—CONSTITUENTS OF ARTIFICIAL SEAWATER[1]

Chemical	Amount
NaF	3 mg
$SrCl_2 6H_2O$	20 mg
H_3BO_3	30 mg
KBr	100 mg
KCl	700 mg
$CaCl_2 2H_2O$	1.47 gram (g)
Na_2SO_4	4.00 g
$MgCl_2 6H_2O$	10.78 g
NaCl	23.50 g
$Na_2SiO_3 9H_2O$	20 mg
$NaHCO_3$	200 mg

[1] If the resulting solution is diluted to 1 L, the salinity should be 34 ±0.5 g/kilogram (kg) and the pH 8.0 ±0.2. The desired test salinity is attained by dilution at time of use.

(3) *Performance of the test*. Using either the procedures in paragraph (c)(3)(ii) or (c)(3)(iii) of this section, determine the water solubility of the test compound at 25 °C in reagent-grade water or buffer solution, as appropriate. Under certain circumstances, it may be necessary to determine the water solubility of a test compound at 25 °C in artificial seawater. The water solubility can also be determined at other temperatures of environmental concern by adjusting the temperature of the water bath to the appropriate temperature.

(i) Prior to the determination of the water solubility of the test chemical, two procedures shall be followed.

(A) The saturated aqueous solution leaving the generator column must be tested for the presence of an emulsion, using a Tyndall procedure. If colloids are present, they must be eliminated prior to the injection into the extractor column. This may be achieved by lowering the flow rate of the water.

(B) The efficiency of the removal of the solute (i.e. test chemical) by the solvent extraction from the extraction column must be determined and used in the determination of the water solubility of the test chemical.

(ii) *Procedure A—HPLC method*—(A) *Scope*. (*1*) Procedure A covers the determination of the aqueous solubility of compounds which absorb in the UV.

(*i*) The HPLC analytical system is shown schematically in the following figure 3:

FIGURE 3—SCHEMATIC OF HPLC—GENERATOR COLUMN FLOW SYSTEM

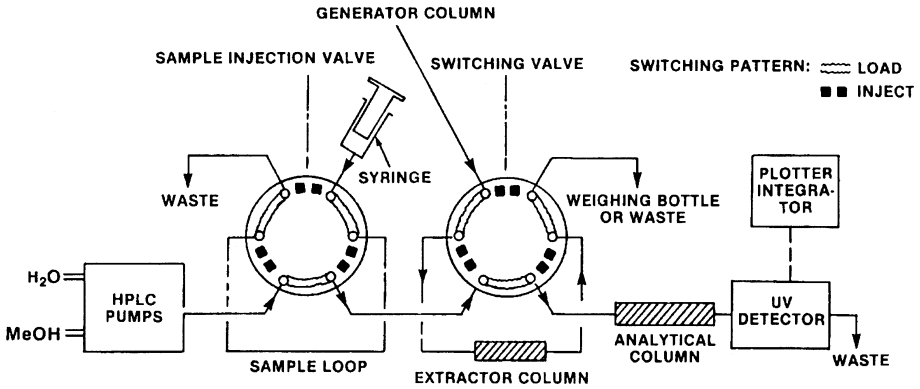

(*ii*) Two reciprocating piston pumps deliver the mobile phase (water or solvent/water mixture) through two 6-port high-pressure rotary valves and a 30 × 0.6 cm C^{18}/Corasil analytical column to a variable wavelength UV absorption detector operating at a suitable wavelength; chromatogram peaks are recorded and integrated with a recording integrator. One of the 6-port valves is the sample injection valve used for injecting samples of standard solutions of the solute in an appropriate concentration for determining RFs of standard solutions of basic chromate for determining the sample-loop volume. The other 6-port valve in the system serves as a switching valve for the extractor column which is used to remove solute from the aqueous solutions.

(*2*) The general procedure for analyzing the aqueous phase is as follows (a detailed procedure is given in paragraph (c)(3)(ii)(B)(*4*) of this section).

(*i*) Direct the aqueous solution to ''Waste,'' see figure 3 in paragraph (c)(3)(ii)(A)(*1*)(*i*) of this section, with the switching valve in the inject position in order to equilibrate internal surfaces with the solution, thus ensuring that the analyzed sample would not be depleted by solute adsorption on surfaces upstream from the valve.

(*ii*) At the same time, water is pumped from the HPLC pumps in order to displace the solvent from the extractor column.

(*iii*) The switching valve is next changed to the load position to divert a sample of the solution through the extractor column, and the liquid leaving this column is collected in a weighing bottle. During this extraction step, the mobile phase is changed to a solvent/water mixture to condition the analytical column.

(*iv*) After the desired volume of sample is extracted, the switching valve is returned to the inject position for elution and analysis. Assuming that there is no breakthrough of solute from the extractor column during the extraction step, the chromatographic peak represents all of the solute in the sample, provided that the extraction efficiency is 100%. If the extraction efficiency is less than 100%, then the extraction efficiency shall be used to determine the actual weight of the solute extracted.

(*v*) The solute concentration in the aqueous phase is calculated from the peak area and the weight of the extracted liquid collected in the weighing bottle.

(B) *Determinations*—(*1*) *Sample-loop volume.* Accurate measurement of the sample loop may be accomplished by using the spectrophotometric method of Devoe et al. under paragraph (e)(1) of this section. For this method measure absorbance, A_{loop}, at 373 nm of at least three solutions, each of which is prepared by collecting from the sample valve an appropriate number, n, of loopfuls of an aqueous stock solution of K_2CrO_4 (1.3% by weight) and diluting to 50 mL with 0.2% KOH. (For a 20 μL loop, use n = 5; for a 50 μL loop, use n = 2.) Also measure the absorbance, A_{stock}, of the same stock solution after diluting 1:500 with 0.2% KOH. Calculate the loop volume to the nearest 0.1 μL using the equation:

Equation 1:

$$V_{loop} = \left(A_{loop} / A_{stock}\right)\left(10^{-4}/n\right)$$

(*2*) *RF.* (*i*) For all determinations adjust the mobile phase solvent/water ratio and flow rate to obtain a reasonable retention time on the HPLC column. For example, typical concentrations of solvent in the mobile phase range from 50 to 100% while flow rates range from 1 to 3 mL/min; these conditions give a 3 to 5 min retention time.

(*ii*) Prepare standard solutions of known concentrations of the solute in a suitable solvent. Concentrations must give a recorder response within the maximum response of the detector. Inject samples of each standard solution into the HPLC system using the calibrated sample loop. Obtain an average peak area from at least three injections of each standard sample at a set absorbance unit full scale (AUFS), *i.e.*, at the same absorbance scale attenuation setting.

(*iii*) Calculate the RF from the following equation:

Equation 2:

$$\text{Response Factor (RF)} = \frac{\text{Concentration mol/L}}{(\text{Average Area})\,(\text{AUFS})}$$

(*3*) *Loading of the generator column.* (*i*) The design of the generator column was described in paragraph (c)(1)(i) of this section and is shown in figure 1 in paragraph (c)(1)(i)(A) of this section. To pack the column, a plug of silanized glass wool is inserted into one end of the 6 mm pyrex tubing. Silanized diatomaceous silica support (about 0.5g 100–120 mesh Chromosorb (W) chromatographic support material) is poured into the tube with tapping and retained with a second plug of silanized glass wool.

(*ii*) If the solute is a liquid, the column is loaded by pulling the liquid solute through the dry support with gentle suction. If the solute is a solid, a 1% solution of the solid in a volatile solvent is added to the dry packing. The solvent is then distilled off the column under reduced pressure. After loading the column draw water up through the column to remove entrapped air.

(*4*) *Analysis of the solute.* Use the following procedure to collect and analyze the solute.

(*i*) With the switching valve (figure 3 in paragraph (c)(3)(ii)(A)(*1*)(*i*) of this section) in the inject position (i.e., water to waste), pump water through the generator column at a flow rate of approximately 1 mL/min for approximately 5 minutes (min) to bring the system into equilibrium. Pump water to the generator column by means of a minipump or pressurized water reservoir as shown in the following figure 4:

FIGURE 4—WATER RESERVOIR FOR GC METHOD

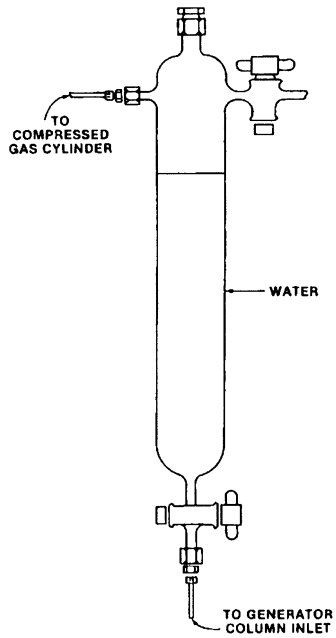

(*ii*) Flush out the solvent that remains in the system from previous runs by changing the mobile phase to 100% H_2O and allowing the water to reach the HPLC detector, as indicated by a negative reading. As soon as this occurs, place a 25 mL weighing bottle (weighed to the nearest mg) at the waste position and immediately turn the switching valve to the load position.

(*iii*) Collect an amount of water (as determined by trial and error) in the weighing bottle, corresponding to the amount of solute adsorbed by the extractor column that gives a large on-scale detector response. During this extraction step, switch back to the original HPLC mobile phase composition, i.e., solvent/water mixture, to condition the HPLC analytical column.

(*iv*) After the desired volume of sample has been extracted, turn the

switching valve back to the inject position (figure 3 in paragraph (c)(3)(ii)(A)(*1*)(*i*) of this section); at the same time turn on the recording integrator. The solvent/water mobile phase will elute the solute from the extractor column and transfer the solute to the HPLC analytical column.

(*v*) Remove the weighing bottle, cap it, and replace it with the waste container. Determine the weight of water collected to the nearest mg and record the corresponding peak area. Using the same AUFS setting repeat the analysis of the solute at least two more times and determine the average ratio of peak area to grams of water collected. In this equation, s = solubility (M), RF = response factor, V_{loop} = sample-loop volume (L), and R = ratio of area to grams of water. Calculate the solute solubility in water using the following equation:

Equation 3:

$$s = (997\ g/L)(RF)(V_{loop})(AUFS)(R)$$

(iii) *Procedure B—GC method*—(A) *Scope*. In the GC method, or any other analytical method, aqueous solutions from the generator column enter a collecting vessel (figure 2 in paragraph (c)(1)(i)(A)(*2*) of this section) containing a known weight of extracting solvent which is immiscible in water. The outlet of the generator column is positioned such that the aqueous phase always enters below the extracting solvent. After the aqueous phase is collected, the collecting vessel is stoppered and the quantity of aqueous phase is determined by weighing. The solvent and the aqueous phase are equilibrated by slowly rotating the collecting vessel. The extraction efficiency of the solvent must be determined at this time. A small amount of the extracting solvent is removed and injected into a gas chromograph equipped with an appropriate detector. The solute concentration in the aqueous phase is determined from a calibration curve constructed using known concentrations of the solute.

(B) *Alternative method*. If another (approved) analytical method is used instead of the GC, that method shall be used to determine quantitatively the amount of solute present in the extraction solvent.

(C) *Determinations—(1) Calibration curve*. (*i*) Prepare solute standard solutions of concentrations covering the range of the solute solubility. Select a column and optimum GC operating conditions for resolution between the solute and solvent and the solute and extracting solvent. Inject a known volume of each standard solution into the injection port of the GC. For each standard solution determine the average of the ratio R of peak area to volume (in microliters) for three chromatographic peaks from three injections.

(*ii*) After running all the standard solutions, determine the coefficients, a and b, using a linear regression equation of C vs. R in the following form:

Equation 4:

$$C = aR + b$$

(*iii*) If another analytical method is used, the procedures described in paragraph (c)(3)(iii)(C)(*1*) of this section shall be used to determine quantitatively the amount of solute in the extraction solvent.

(*2*) *Loading of the generator column*. The generator column is packed and loaded with solute in the same manner as for the HPLC method described under paragraph (c)(3)(ii)(B)(*3*) of this section. As shown in figure 2 in paragraph (c)(1)(i)(A)(*2*) of this section, attach approximately 20 cm of straight stainless steel tubing to the bottom of the generator column. Connect the top of the generator column to a water reservoir (figure 4 in paragraph (c)(3)(ii)(B)(*4*)(*i*) of this section) using teflon tubing. Use air or nitrogen pressure (5 PSI) from an air or nitrogen cylinder to force water from the reservoir through the column. Collect water in an Erlenmeyer flask for approximately 15 min while the solute concentration in water equilibrates; longer time may be required for less soluble compounds.

(*3*) *Collection and extraction of the solute*. During the equilibration time, add a known weight of extracting solvent to a collection vessel which can be capped. The extracting solvent should

cover the bottom of the collection vessel to a depth sufficient to submerge the collecting tube but still maintain 100:1 water/solvent ratio. Record the weight (to the nearest mg) of a collection vessel with cap and extracting solvent. Place the collection vessel under the generator column so that water from the collecting tube enters below the level of the extracting solvent (figure 2 in paragraph (c)(1)(i)(A)(*2*) of this section). When the collection vessel is filled, remove it from under the generator column, replace cap, and weigh the filled vessel. Determine the weight of water collected. Before analyzing for the solute, gently shake the collection vessel contents for approximately 30 min, controlling the rate of shaking so as not to form an emulsion; rotating the flask end over end five times per minute is sufficient.

(*4*) *Analysis of the solute.* (*i*) After shaking, allow the collection vessel to stand for approximately 30 min; then remove a known volume of the extracting solvent from the vessel using a microliter syringe and inject it into the GC. Record the ratio of peak area to volume injected and, from the regression equation of the calibration line, determine the concentration of solute in the extracting solvent. In this equation, C_{es} is the concentration of solute in extracting solvent (M), d_{H2O} and d_{es} are the densities of water and extracting solvent, respectively, and g_{es} and g_{H2O} are the grams of extracting solvent and water, respectively, contained in the collection vessel. The concentration of solute in water C(M) is determined from the following equation:

Equation 5:

$$C(M) = (C_{es})\left[\left(d_{H_2O}/d_{es}\right)\right]\left[\left(g_{es}/g_{H_2O}\right)\right]$$

(*ii*) Make replicate injections from each collecting vessel to determine the average solute concentration in water for each vessel. To make sure the generator column has reached equilibrium, run at least two additional (for a total of three) collection vessels and analyze the extracted solute as described above. Calculate the water solubility of the solute from the average solute concentration in the three vessels.

(iv) *Modification of procedures for potential problems.* If the test compound decomposes in one or more of the aqueous solvents required during the period of the test at a rate such that an accurate value for water solubility cannot be obtained, then it will be necessary to carry out detailed transformation studies; e.g., hydrolysis in paragraph (e)(16) of this section. If decomposition is due to aqueous photolysis, then it will be necessary to carry out water solubility studies in the dark, under red or yellow lights, or by any other suitable method to eliminate this transformation process.

(d) *Data and reporting*—(1) *Test report.* (i) For each set of conditions, (e.g., temperature, pure water, buffer solution, artificial seawater) required for the study, provide the water solubility value for each of three determinations, the mean value, and the standard deviation.

(ii) For compounds that decompose at a rate such that a precise value for the water solubility cannot be obtained, provide a statement to that effect.

(iii) For compounds with water solubility below 1 ppb, report the value as ''less than 1 ppb.''

(2) *Specific analytical, calibration, and recovery procedures.* (i) For the HPLC method describe and/or report:

(A) The method used to determine the sample-loop volume and the average and standard deviation of that volume.

(B) The average and standard deviation of the RF.

(C) Any changes made or problems encountered in the test procedure.

(ii) For the GC, or any other analytical, method report:

(A) The column and GC operating conditions of temperature and flow rate, or the operating conditions of any other analytical method used.

(B) The average and standard deviation of the average area per microliter obtained for each of the standard solutions.

(C) The form of the regression equation obtained in the calibration procedure.

(D) The extracting solvent used, and its extraction efficiency.

(E) The average and standard deviation of solute concentration in each collection vessel.

(F) Any changes made or problems encountered in the test procedure.

(G) If applicable, a complete description of the analytical method which was used instead of the GC method.

(e) *References*. For additional information on this test guideline, the following references should be consulted. These references are available at the addresses in § 700.17(b)(1) and (2) of this chapter.

(1) DeVoe, H. et al., Generator columns and high pressure liquid chromatography for determining aqueous solubilities and octanol-water partition coefficients of hydrophobic substances. *Journal of Research, National Bureau of Standards*, 86:361–366 (1981).

(2) Hansch, C. et al., The linear free-energy relationship between partition coefficients, and the aqueous solubility of organic liquids. *Journal of Organic Chemistry* 33:347-350 (1968).

(3) Leifer, A. et al., Environmental transport and transformation of polychlorinated biphenyls. Chapter 1. U.S. Environmental Protection Agency Report: EPA-560/5–83–005 (1983).

(4) Mackay, D. et al., Relationships between aqueous solubility and octanol-water partition coefficient. *Chemosphere* 9:701-711 (1980).

(5) May, W.E. et al., Determination of the aqueous solubility of polynuclear aromatic hydrocarbons by a coupled column liquid chromatographic technique. *Analytical Chemistry* 50:175–179 (1978).

(6) May, W.E. et al. Determination of the solubility behavior of some polycyclic aromatic hydrocarbons in the water. *Analytical Chemistry*, 50:997–1000 (1978a).

(7) Miller, N.M. et al., Aqueous solubilities, octanol/water partition coefficients, and entropy of melting of chlorinated benzenes and biphenyls. *Journal of Chemical and Engineering Data* 29:184-190 (1984).

(8) OECD/Organization for Economic Cooperation and Development. Test Guideline No. 105. Water solubility column elution-flask method (1981).

(9) Sutton, C. and Calder, J.A., Solubility of alkylbenzenes in distilled water and seawater at 25 °C. *Journal of Chemical and Engineering Data* 20:320–322 (1975).

(10) Tewari, Y.B. et al., Aqueous solubility and octanol/water partition coefficient of organic compounds at 25 °C. *Journal of Chemical and Engineering Data* 27:451-454 (1982).

(11) Wasik, S.P. et al., Octanol/Water Partition Coefficient and Aqueous Solubilities of Organic Compounds. NBS Report NBSIR 81–2406. Washington, DC: National Bureau of Standards, U.S. Department of Commerce (1981).

(12) Yalkowski, S.H. et al., ''Aquasol database of aqueous solubilities of organic compounds''; Fifth Edition. University of Arizona, College of Pharmacy, Tucson, AZ 85721 (1990) (available at *http://www.pharm.arizona.edu/aquasol/index.html*).

(13) ASTM D 1193–91, *Standard Specification for Reagent Water*. American Society for Testing and Materials (ASTM). 1916 Race St., Philadelphia, PA 19103.

[65 FR 78751, Dec. 15, 2000, as amended at 77 FR 46293, Aug. 3, 2012]

Subparts F–G [Reserved]

Subpart H—Health Effects Test Guidelines

SOURCE: 62 FR 43824, Aug. 15, 1997, unless otherwise noted.

§ 799.9110 TSCA acute oral toxicity.

(a) *Scope*. This section is intended to meet the testing requirements under section 4 of the Toxic Substances Control Act (TSCA). In the assessment and evaluation of the toxic characteristics of a substance, determination of acute oral toxicity is usually an initial step. It provides information on health hazards likely to arise from short-term exposure by the oral route. Data from an acute study may serve as a basis for classification and labeling. It is traditionally a step in establishing a dosage regimen in subchronic and other studies and may provide initial information on the mode of toxic action of a substance. An evaluation of acute toxicity

data should include the relationship, if any, between the exposure of animals to the test substance and the incidence and severity of all abnormalities, including behavioral and clinical abnormalities, the reversibility of observed abnormalities, gross lesions, body weight changes, effects on mortality, and any other toxic effects.

(b) *Source*. The source material used in developing this TSCA test guideline is the Office of Prevention, Pesticides, and Toxic Substances (OPPTS) harmonized test guideline 870.1100 (August 1998, final guideline). This source is available at the address in paragraph (f) of this section.

(c) *Definitions*. The following definitions apply to this section.

Acute oral toxicity is the adverse effects occurring within a short period of time after oral administration of either a single dose of a substance or multiple doses given within a 24–hour period.

Dosage is a general term comprising the dose, its frequency, and the duration of dosing.

Dose is the amount of test substance administered. Dose is expressed as weight of test substance (milligrams, grams) per unit weight of test animal (e.g., milligrams per kilogram).

Dose-effect is the relationship between the dose and the magnitude of a defined biological effect either in an individual or in a population sample.

Dose-response is the relationship between the dose and the proportion of a population sample showing a defined effect.

LD_{50} (median lethal dose) is a statistically derived estimate of single dose of a substance that can be expected to cause death in 50% of animals when administered by the oral route. The LD_{50} value is expressed in terms of weight of test substance per unit weight of test animal (milligrams per kilogram).

(d) *Alternative approaches to the determination of acute toxicity*. (1) EPA will accept the following procedures to reduce the number of animals used to evaluate acute effects of chemical exposure while preserving its ability to make reasoned judgments about safety:

(i) *Estimation of acute oral toxicity*. When further study is warranted, EPA generally supports limiting such tests to those using the lowest number of animals feasible. EPA will accept three alternative Organization for Economic Cooperation and Development (OECD) test methods in place of the ''traditional'' acute oral toxicity test. The three OECD alternatives are the following:

(A) The up and down procedure as described in OECD Guideline 425 referenced in paragraph (f)(4) of this section.

(B) The acute toxic class method as described in OECD Guideline 423 and referenced in paragraph (f)(6) of this section.

(C) The fixed dose method as described in OECD Guideline 420 and referenced in paragraph (f)(5) of this section.

(ii) *Limit test*. When data on structurally related chemicals are inadequate, a limit test may be considered. If rodents are used, a limit dose of at least 2,000 mg per kilogram of body weight may be administered to a single group of five males and five females using the procedures described in paragraph (e) of this section. If no lethality is demonstrated, no further testing for acute oral toxicity is needed. (Under current policy and regulations for pesticide products, precautionary statements may still be required unless there are data to indicate the LD_{50} is greater than 5,000 mg/kg.) If compound-related mortality is produced in the limit test, further study may need to be considered.

(2) [Reserved]

(e) *Conventional acute toxicity test*—(1) *Principle of the test method*. The test substance is administered orally by gavage in graduated doses to several groups of experimental animals, one dose being used per group. The doses chosen may be based on the results of a range finding test. Subsequently, observations of effects and deaths are made. Animals that die during the test are necropsied, and at the conclusion of the test the surviving animals are sacrificed and necropsied. This section is directed primarily to studies in rodent species but may be adapted for studies in nonrodents. Animals showing severe and enduring signs of distress and pain may need to be humanely sacrificed. Dosing test substances in a way known

to cause marked pain and distress due to corrosive or irritating properties need not be carried out.

(2) *Substance to be tested*. Test, control, and reference substances are described in 40 CFR Part 792—Good Laboratory Practice Standards.

(3) *Test procedures*—(i) *Preparations*. Healthy young adult animals are acclimatized to the laboratory conditions for at least 5 days prior to the test before the test animals are randomized and assigned to the treatment groups.

(ii) *Animal selection*—(A) *Species and strain*. Although several mammalian test species may be used, the rat is the preferred species. Commonly used laboratory strains must be employed. If another species is used, the tester must provide justification and reasoning for its selection.

(B) *Age*. Young adult rats between 8- and 12-weeks-old at the beginning of dosing should be used. Rabbits should be at least 12 weeks of age at study initiation. The weight variation of animals used in a test must be within 20% of the mean weight for each sex.

(C) *Number and sex of animals*. (*1*) At least five experimentally naive rodents are used at each dose level. They should all be of the same sex. After completion of the study in one sex, at least one group of five animals of the other sex is dosed to establish that animals of this sex are not markedly more sensitive to the test substance. The use of fewer animals may be justified in individual circumstances. Where adequate information is available to demonstrate that animals of the sex tested are markedly more sensitive, testing in animals of the other sex may be dispensed with. An acceptable option would be to test at least one group of five animals per sex at one or more dose levels to definitively determine the more sensitive sex prior to conducting the main study.

(*2*) The females must be nulliparous and nonpregnant.

(*3*) In acute toxicity tests with animals of a higher order than rodents, the use of smaller numbers should be considered.

(D) *Assignment of animals*. Each animal must be assigned a unique identification number. A system to assign animals to test groups and control groups randomly is required.

(E) *Housing*. Animals may be group-caged by sex, but the number of animals per cage must not interfere with clear observation of each animal. The biological properties of the test substance or toxic effects (e.g., morbidity, excitability) may indicate a need for individual caging.

(*1*) The temperature of the experimental animal rooms should be at 22 ±3 °C for rodents.

(*2*) The relative humidity of the experimental animal rooms should be 30 to 70%.

(*3*) Where lighting is artificial, the sequence should be 12–hours light/12–hours dark.

(*4*) For feeding, conventional laboratory diets may be used with an unlimited supply of drinking water.

(iii) *Dose levels and dose selection*. (A) Three dose levels must be used, spaced appropriately to produce test groups with a range of toxic effects and mortality rates. The data collected must be sufficient to produce a dose-response curve and permit an acceptable estimation of the LD_{50}. Range finding studies using single animals may help to estimate the positioning of dose groups so that no more than three dose levels will be necessary.

(B) *Limit test*. This test has been defined and described in paragraph (d)(1)(ii) of this section.

(C) *Vehicle*. Where necessary, the test substance is dissolved or suspended in a suitable vehicle. If a vehicle or diluent is needed, it should not elicit toxic effects itself nor substantially alter the chemical or toxicological properties of the test substance. It is recommended that wherever possible the use of an aqueous solution be considered first, followed by consideration of a solution in oil (e.g., corn oil), and then by consideration of possible solution in other vehicles. Toxic characteristics of non-aqueous vehicles should be known, and, if not known, should be determined before the test.

(D) *Volume*. The maximum volume of liquid that can be administered at one time depends on the size of the test animal. In rodents, the volume should not exceed 1 mL/100 g body weight, except when an aqueous solution is used

in which case 2 mL/100 g may be administered. Either constant volume or constant concentration administration is acceptable when dosing, provided the following guidance is employed. When possible, the liquid test material should be dosed neat. Otherwise, it may be diluted, using the highest concentration possible, although volumes less than 0.5 mL per animal would not be required. Lower dose volumes are acceptable if they can be accurately administered. Solid materials should be suspended or dissolved in the minimum amount of vehicle and dosed at the highest concentration possible.

(iv) *Exposure and exposure duration.* (A) Animals must be fasted prior to test substance administration. For the rat, feed should be withheld overnight; for other rodents with higher metabolic rates a shorter period of fasting is appropriate.

(B) The test substance must be administered in a single dose by gavage, using a stomach tube or suitable intubation cannula.

(C) If a single dose is not possible, the dose may be given in smaller fractions over a period not exceeding 24 hours. Where a dose is administered in fractions, it may be necessary to provide the animals with food and water, depending on the length of the dosing period.

(D) After the substance has been administered, feed may be withheld for an additional 3–4 hours.

(v) *Observation period.* Although 14 days is recommended as a minimum observation period, the duration of observation should not be fixed rigidly. It should be determined by the toxic reactions, rate of onset, and length of recovery period, and may thus be extended when considered necessary. The time at which signs of toxicity appear, their duration, and the time to death are important, especially if there is a tendency for deaths to be delayed.

(vi) *Observation of animals.* (A) A careful clinical examination must be made at least once each day.

(B) Additional observations must be made daily, especially in the early days of the study. Appropriate actions should be taken to minimize loss of animals to the study (e.g., necropsy or refrigeration of those animals found dead and isolation of weak or moribund animals).

(C) Observations must be detailed and carefully recorded, preferably using explicitly defined scales. Observations should include, but not be limited to, evaluation of skin and fur, eyes and mucous membranes, respiratory and circulatory effects, autonomic effects such as salivation, central nervous system effects, including tremors and convulsions, changes in the level of activity, gait and posture, reactivity to handling or sensory stimuli, altered strength, and stereotypies or bizarre behavior (e.g., self-mutilation, walking backwards).

(D) Individual weights of animals must be determined shortly before the test substance is administered, weekly thereafter, and at death. Changes in weights should be calculated and recorded when survival exceeds 1 day.

(E) The time of death should be recorded as precisely as possible.

(vii) *Gross pathology.* (A) At the end of the test, surviving animals must be weighed and sacrificed.

(B) A gross necropsy must be performed on all animals under test. All gross pathology changes should be recorded.

(C) If necropsy cannot be performed immediately after a dead animal is discovered, the animal should be refrigerated (not frozen) at temperatures low enough to minimize autolysis. Necropsies should be performed as soon as practicable, normally within a day or two.

(viii) *Additional evaluation.* Microscopic examination of organs showing evidence of gross pathology in animals surviving 24 hours or more should also be considered because it may yield useful information.

(ix) *Data and reporting*—(A) *Treatment of results.* Data must be summarized in tabular form, showing for each test group the number of animals at the start of the test, body weights, time of death of individual animals at different dose levels, number of animals displaying other signs of toxicity, description of toxic effects, and necropsy findings. Any methods used for calculation of the LD_{50} or any other parameters should be specified and referenced. Methods for parameter estimation are

described in the references listed in paragraphs (f)(1), (f)(2), and (f)(3) of this section.

(B) *Evaluation of results*. An evaluation should include the relationship, if any, between exposure of the animals to the test substance and the incidence and severity of all abnormalities, including behavioral and clinical abnormalities, gross lesions, body weight changes, effects on mortality, and any other toxic effects. The LD_{50} value should always be considered in conjunction with the observed toxic effects and any necropsy findings. The LD_{50} value is a relatively coarse measurement, useful only as a reference value for classification and labeling purposes, and for an expression of the lethal potential of the test substance by the ingestion route. Reference should always be made to the experimental animal species in which the LD_{50} value was obtained.

(C) *Test report*. In addition to the reporting requirements specified under EPA Good Laboratory Practice Standards at 40 CFR part 792, subpart J, the following specific information must be reported. The test report shall include:

(*1*) Species, strain, sex, and source of test animals.

(*2*) Method of randomization in assigning animals to test and control groups.

(*3*) Rationale for selection of species, if other than that recommended.

(*4*) Tabulation of individual and test group data by sex and dose level (e.g., number of animals exposed, number of animals showing signs of toxicity and number of animals that died or were sacrificed during the test).

(*i*) Description of toxic effects, including their time of onset, duration, reversibility, and relationship to dose.

(*ii*) Body weights.

(*iii*) Time of dosing and time of death after dosing.

(*iv*) Dose-response curves for mortality and other toxic effects (when permitted by the method of determination).

(*v*) Gross pathology findings.

(*vi*) Histopathology findings and any additional clinical chemistry evaluations, if performed.

(*5*) Description of any pretest conditioning, including diet, quarantine and treatment for disease.

(*6*) Description of caging conditions including: Number (or change in number) of animals per cage, bedding material, ambient temperature and humidity, photoperiod, and identification of diet of test animals.

(*7*) Manufacturer, source, purity, and lot number of test substance.

(*8*) Relevant properties of substance tested including physical state and pH (if applicable).

(*9*) Identification and composition of any vehicles (e.g., diluents, suspending agents, and emulsifiers) or other materials used in administering the test substance.

(*10*) A list of references cited in the body of the report. References to any published literature used in developing the test protocol, performing the testing, making and interpreting observations, and compiling and evaluating the results.

(f) *References*. For additional background information on this test guideline, the following references should be consulted. These references are available at the addresses in § 700.17(b)(1) and (2) of this chapter.

(1) Chanter, D.O. and Heywood, R. The LD_{50} Test: Some Considerations of Precision. *Toxicology Letters* 10:303–307 (1982).

(2) Finney, D.J. Chapter 3—Estimation of the median effective dose and Chapter 4—Maximum likelihood estimation, *Probit Analysis*, 3rd ed. Cambridge, London (1971).

(3) Finney, D.J. The Median Lethal Dose and Its Estimation. *Archives of Toxicology* 56:215–218 (1985).

(4) Organization for Economic Cooperation and Development. OECD Guidelines for the Testing of Chemicals. OECD Guideline 425: Acute Oral Toxicity: Up-and-Down Procedure, Approved: June 1998.

(5) Organization for Economic Cooperation and Development. OECD Guidelines for Testing of Chemicals. Guideline 420: Acute Oral Toxicity—Fixed Dose Method, Adopted: July 17, 1992.

(6) Organization for Economic Cooperation and Development. OECD Guidelines for Testing of Chemicals.

Guideline 423: Acute Oral Toxicity—Acute Toxic Class Method, Adopted: March 22, 1996.

(7) Organization for Economic Cooperation and Development. OECD Guidelines for Testing of Chemicals. Guideline 401: Acute Oral Toxicity, Adopted: February 24, 1987.

[65 FR 78751, Dec. 15, 2000, as amended at 77 FR 46293, Aug. 3, 2012]

§ 799.9120 TSCA acute dermal toxicity.

(a) *Scope*. This section is intended to meet the testing requirements under section 4 of the Toxic Substances Control Act (TSCA). In the assessment and evaluation of the toxic characteristics of a substance, determination of acute dermal toxicity is useful where exposure by the dermal route is likely. It provides information on health hazards likely to arise from short-term exposure by the dermal route. Data from an acute study may serve as a basis for classification and labeling. It is an initial step in establishing a dosage regimen in subchronic and other studies and may provide information on dermal absorption and the mode of toxic action of a substance by this route. An evaluation of acute toxicity data should include the relationship, if any, between the exposure of animals to the test substance and the incidence and severity of all abnormalities, including behavioral and clinical abnormalities, the reversibility of observed abnormalities, gross lesions, body weight changes, effects on mortality, and any other toxic effects.

(b) *Source*. The source material used in developing this TSCA test guideline is the Office of Prevention, Pesticides, and Toxic Substances (OPPTS) harmonized test guideline 870.1200 (August 1998, final guideline). This source is available at the address in paragraph (f) of this section.

(c) *Definitions*. The following definitions apply to this section.

Acute dermal toxicity is the adverse effects occurring within a short time of dermal application of a single dose of a substance or multiple doses given within a 24–hour period.

Dosage is a general term comprising the dose, its frequency and the duration of dosing.

Dose is the amount of test substance applied. Dose is expressed as weight of test substance (grams, milligrams) per unit weight of test animal (e.g., milligrams per kilogram).

Dose-effect is the relationship between the dose and the magnitude of a defined biological effect either in an individual or in a population sample.

Dose-response is the relationship between the dose and the proportion of a population sample showing a defined effect.

LD_{50} (median lethal dose), dermal, is a statistically derived estimate of a single dose of a substance that can be expected to cause death in 50% of treated animals when applied to the skin. The LD_{50} value is expressed in terms of weight of test substance per unit weight of test animal (milligrams per kilogram).

(d) *Approaches to the determination of acute toxicity*. (1) EPA recommends the following means to reduce the number of animals used to evaluate acute effects of chemical exposure while preserving its ability to make reasonable judgments about safety:

(i) Using data from substantially similar mixtures. In order to minimize the need for animal testing, the Agency encourages the review of existing acute toxicity information on mixtures that are substantially similar to the mixture under investigation. In certain cases it may be possible to glean enough information to make preliminary hazard evaluations that may reduce the need for further animal testing.

(ii) *Limit test*. When data on structurally related chemicals are inadequate, a limit test may be considered. If rodents are used, a limit dose of at least 2,000 mg/kg bodyweight may be administered to a single group of five males and five females using the procedures described in paragraph (e) of this section. If no lethality is demonstrated, no further testing for acute dermal toxicity is needed. If compound-related mortality is produced, further study may need to be considered.

(2) [Reserved]

(e) *Conventional acute toxicity test*—(1) *Principle of the test method*. The test

substance is applied dermally in graduated doses to several groups of experimental animals, one dose being used per group. The doses chosen may be based on the results of a range finding test. Subsequently, observations of effects and deaths are made. Animals that die during the test are necropsied, and at the conclusion of the test the surviving animals are sacrificed and necropsied. This section is directed primarily to studies in either rats, rabbits, or guinea pigs but may be adapted for studies in other species. Animals showing severe and enduring signs of distress and pain may need to be humanely sacrificed. Dosing test substances in a way known to cause marked pain and distress due to corrosive or irritating properties need not be carried out.

(2) *Substance to be tested*. Test, control, and reference substances are discussed in 40 CFR Part 792—Good Laboratory Practice Standards.

(3) *Test procedures*—(i) *Preparations*. Healthy young adult animals are acclimatized to the laboratory conditions for at least 5 days prior to the test before the test animals are randomized and assigned to the treatment groups.

(ii) *Animal selection*—(A) *Species and strain*. The rat, rabbit, or guinea pig may be used. The albino rabbit is preferred because of its size, ease of handling, skin permeability, and extensive data base. Commonly used laboratory strains must be employed. If a species other than rats, rabbits, or guinea pigs is used, the tester must provide justification and reasoning for its selection.

(B) *Age*. Young adult animals, rats between 8- and 12-weeks-old, rabbits at least 12-weeks-old, and guinea pigs between 5- and 6-weeks-old at the beginning of dosing should be used. The weight variation of animals used in a test must be within 20% of the mean weight for each sex.

(C) *Number and sex of animals*. (*1*) At least five experimentally naive animals with healthy intact skin are used at each dose level. They should all be of the same sex. After completion of the study in one sex, at least one group of five animals of the other sex is dosed to establish that animals of this sex are not markedly more sensitive to the test substance. The use of fewer animals may be justified in individual circumstances. Where adequate information is available to demonstrate that animals of the sex tested are markedly more sensitive, testing in animals of the other sex may be dispensed with. An acceptable option would be to test at least one group of five animals per sex at one or more dose levels to definitively determine the more sensitive sex prior to conducting the main study.

(*2*) The females must be nulliparous and nonpregnant.

(*3*) In acute toxicity tests with animals of a higher order than those mentioned above, the use of smaller numbers should be considered.

(D) *Assignment of animals*. Each animal must be assigned a unique identification number. A system to randomly assign animals to test groups and control groups is required.

(E) *Housing*. Animals should be housed in individual cages.

(*1*) The temperature of the experimental animal rooms should be at 22 ±3 °C for rodents, 20 ±3 °C for rabbits.

(*2*) The relative humidity of the experimental animal rooms should be 30 to 70%.

(*3*) Where lighting is artificial, the sequence should be 12–hours light/12–hours dark.

(*4*) For feeding, conventional laboratory diets may be used with an unlimited supply of drinking water.

(iii) *Dose levels and dose selection*. (A) Three dose levels must be used and spaced appropriately to produce test groups with a range of toxic effects and mortality rates. The data must be sufficient to produce a dose-response curve and permit an acceptable estimation of the median lethal dose. Range finding studies using single animals may help to estimate the positioning of the dose groups so that no more than three dose levels will be necessary.

(B) *Limit test*. This test is described in paragraph (d)(2)(ii) of this section.

(C) *Vehicle*. Solids should be pulverized when possible. The test substance should be moistened sufficiently with water or, where necessary, a suitable vehicle to ensure good contact with skin. If a vehicle or diluent is needed, it should not elicit toxic effects itself

nor substantially alter the chemical or toxicological properties of the test substance. In addition, the influence of the vehicle on penetration of skin by the test substance should be taken into account. It is recommended that wherever possible the use of an aqueous solution be considered first, followed by consideration of a solution in oil (e.g., corn oil), and then by consideration of possible solution in other vehicles. For nonaqueous vehicles the toxic characteristics of the vehicle should be known, and if not known should be determined before the test. Acceptable alternative vehicles include gum arabic, ethanol and water, carboxymethyl cellulose, glycerol, propylene glycol, PEG vegetable oil, and mineral oil as long as the vehicle is not irritating and the inability to use water or saline is justified in the report.

(iv) *Exposure and exposure duration.* The test substance must be administered over a period of 24 hours.

(v) *Preparation of animal skin.* Fur must be clipped from the dorsal area of the trunk of the test animals. Shaving may be employed, but it should be carried out at least 24 hours before dosing. Care must be taken to avoid abrading the skin, which would alter its permeability.

(vi) *Application of test substance.* (A) The test substance must be applied uniformly over a shaved or clipped area which is approximately 10% of the body surface area. The area starting at the scapulae (shoulders) to the wing of the ileum (hip bone) and half way down the flank on each side of the animal should be shaved or clipped. Liquid test materials should be undiluted if possible. With highly toxic substances, the surface area covered may be less, but as much of the area as possible should be covered with as thin and uniform a film as practical. The test material is not removed until 24 hours after application. In the case where less than 10% of the surface area is covered an approximation of the exposed areas should be determined.

(B) The test substance must be held in contact with the skin with a porous gauze dressing (<8 ply) and nonirritating tape throughout a 24–hour exposure period. The test site must be further covered in a suitable manner to retain the gauze dressing and test substance and ensure that the animals cannot ingest the test substance. Restrainers may be used to prevent the ingestion of the test substance, but complete immobilization is not a recommended method. Although a semiocclusive dressing is preferred, an occlusive dressing will also be acceptable.

(C) At the end of the exposure period, residual test substance should be removed where practicable using water or an appropriate solvent.

(vii) *Observation period.* Although 14 days is recommended as a minimum observation period, the duration of observation should not be fixed rigidly. It should be determined by the toxic reactions, rate of onset, and length of recovery period, and may thus be extended when considered necessary. The time at which signs of toxicity appear, their duration, and the time to death are important, especially if there is a tendency for deaths to be delayed.

(viii) *Observation of animals.* (A) A careful clinical examination must be made at least once each day.

(B) Additional observations must be made daily, especially in the early days of the study. Appropriate actions should be taken to minimize loss of animals to the study (e.g., necropsy or refrigeration of those animals found dead and isolation of weak or moribund animals).

(C) Observations must be detailed and carefully recorded, preferably using explicitly defined scales. Observations should include, but not be limited to, evaluation of skin and fur, eyes and mucous membranes, respiratory and circulatory effects, autonomic effects such as salivation, central nervous system effects, including tremors and convulsions, changes in the level of activity, gait and posture, reactivity to handling or sensory stimuli, altered strength, and stereotypies or bizarre behavior (*e.g.*, self-mutilation, walking backwards).

(D) Individual weights of animals must be determined shortly before the test substance is administered, weekly thereafter, and at death. Changes in weights should be calculated and recorded when survival exceeds one day.

(E) The time of death should be recorded as precisely as possible.

(ix) *Gross pathology*. (A) At the end of the test, surviving animals must be weighed and sacrificed.

(B) A gross necropsy must be performed on all animals under test. All gross pathology changes should be recorded.

(C) If necropsy cannot be performed immediately after a dead animal is discovered, the animal should be refrigerated (not frozen) at temperatures low enough to minimize autolysis. Necropsies should be performed as soon as practicable, normally within a day or two.

(x) *Additional evaluations*. Microscopic examination of organs showing evidence of gross pathology in animals surviving 24 hours or more should also be considered because it may yield useful information.

(xi) *Data and reporting*—(A) *Treatment of results*. Data must be summarized in tabular form, showing for each test group the number of animals at the start of the test, body weights, time of death of individual animals at different dose levels, number of animals displaying other signs of toxicity, description of toxic effects and necropsy findings. Any methods used for calculation of the LD_{50} or any other parameters should be specified and referenced. Methods for parameter estimation are described in the references listed in paragraphs (f)(1), (f)(2), and (f)(3) of this section.

(B) *Evaluation of results*. An evaluation should include the relationship, if any, between exposure of the animals to the test substance and the incidence and severity of all abnormalities, including behavioral and clinical abnormalities, gross lesions, body weight changes, effects on mortality, and any other toxic effects. The LD_{50} value should always be considered in conjunction with the observed toxic effects and any necropsy findings. The LD_{50} value is a relatively coarse measurement, useful only as a reference value for classification and labeling purposes, and for an expression of the lethal potential of the test substance by the dermal route. Reference should always be made to the experimental animal species in which the LD_{50} value was obtained.

(C) *Test report*. In addition to the reporting requirements specified under EPA Good Laboratory Practice Standards at 40 CFR part 792, subpart J, the following specific information must be reported. The test report must include:

(*1*) Species, strain, sex, and source of test animals.

(*2*) Method of randomization in assigning animals to test and control groups.

(*3*) Rationale for selection of species, if other than that recommended.

(*4*) Tabulation of individual and test group data by sex and dose level (*e.g.*, number of animals exposed, number of animals showing signs of toxicity and number of animals that died or were sacrificed during the test).

(*i*) Description of toxic effects, including their time of onset, duration, reversibility, and relationship to dose.

(*ii*) Body weights.

(*iii*) Time of dosing and time of death after dosing.

(*iv*) Dose-response curves for mortality and other toxic effects (when permitted by the method of determination).

(*v*) Gross pathology findings.

(*vi*) Histopathology findings and any additional clinical chemistry evaluations, if performed.

(*5*) Description of any pre-test conditioning, including diet, quarantine and treatment for disease.

(*6*) Description of caging conditions including: Number (or change in number) of animals per cage, bedding material, ambient temperature and humidity, photoperiod, and identification of diet of test animals.

(*7*) Manufacturer, source, purity, and lot number of test substance.

(*8*) Relevant properties of substance tested including physical state and pH (if applicable).

(*9*) Identification and composition of any vehicles (e.g., diluents, suspending agents, and emulsifiers) or other materials used in administering the test substance.

(*10*) A list of references cited in the body of the report. References to any published literature used in developing

the test protocol, performing the testing, making and interpreting observations, and compiling and evaluating the results.

(f) *References*. For additional background information on this test guideline, the following references should be consulted. These references are available at the addresses in § 700.17(b)(1) and (2) of this chapter.

(1) Chanter, D.O. and Heywood, R., The LD_{50} Test: Some Considerations of Precision, *Toxicology Letters* 10:303–307 (1982).

(2) Finney, D.J. Chapter 3—Estimation of the median effective dose and Chapter 4-Maximum likelihood estimation, *Probit Analysis*, 3rd ed. Cambridge, London (1971).

(3) Finney, D.J. The Median Lethal Dose and Its Estimation. *Archives of Toxicology* 56:215–218 (1985).

(4) Organization for Economic Cooperation and Development. OECD Guideline for the Testing of Chemicals. OECD Guideline 425: Acute Oral Toxicity: Up-and-Down Procedure. Adopted: September 21, 1998.

(5) Organization for Economic Cooperation and Development. OECD Guidelines for Testing of Chemicals. Guideline 420: Acute Oral Toxicity—Fixed Dose Method. Adopted: July 17, 1992.

(6) Organization for Economic Cooperation and Development. OECD Guidelines for Testing of Chemicals. Guideline 423: Acute Oral Toxicity—Acute Toxic Class Method. Adopted: March 22, 1996

(7) Organization for Economic Cooperation and Development. OECD Guidelines for Testing of Chemicals. Guideline 402: Acute Dermal Toxicity. Adopted: February 24, 1987.

[65 FR 78774, Dec. 15, 2000, as amended at 77 FR 46294, Aug. 3, 2012]

§ 799.9130 TSCA acute inhalation toxicity.

(a) *Scope*. This section is intended to meet testing requirements under section 4 of the Toxic Substances Control Act (TSCA). Determination of acute toxicity is usually an initial step in the assessment and evaluation of the toxic characteristics of a substance that may be inhaled such as a gas, volatile substance, or aerosol/particle. It provides information on health hazards likely to arise from short-term exposure by the inhalation route. Data from an acute study may serve as a basis for classification and labeling. It is traditionally a step in establishing a dosage regimen in subchronic and other studies and may provide initial information on the mode of toxic action of a substance. An evaluation of acute toxicity data should include the relationship, if any, between the animals' exposure to the test substance and the incidence and severity of all abnormalities, including behavioral and clinical abnormalities, the reversibility of observed abnormalities, gross lesions, body weight changes, effects on mortality, and any other toxic effects.

(b) *Source*. The source material used in developing this TSCA test guideline is the harmonized Office of Prevention, Pesticides, and Toxic Substances (OPPTS) test guideline 870.1300 (August 1998, final guideline). These sources are available at the address in paragraph (g) of this section.

(c) *Definitions*. The definitions in section 3 of TSCA and the definitions in 40 CFR Part 792—Good Laboratory Practice Standards apply to this section. The following definitions also apply to this section.

Acute inhalation toxicity is the adverse effect caused by a substance following a single uninterrupted exposure by inhalation over a short period of time (24 hours or less) to a substance capable of being inhaled.

Aerodynamic equivalent diameter is defined as the diameter of a unit-density sphere having the same terminal settling velocity as the particle in question, whatever its size, shape, and density. It is used to predict where in the respiratory tract such particles may be deposited.

Concentration is expressed as weight of the test substance per unit volume of air, e.g., milligrams per liter.

Geometric standard deviation (GSD) is a dimensionless number equal to the ratio between the mass median aerodynamic diameter (MMAD) and either 84% or 16% of the diameter size distribution (*e.g.*, MMAD = 2 m; 84% = 4 m; GSD = 4/2 = 2.0.) The MMAD, together with the GSD, describe the particle size distribution of an aerosol. Use of the

GSD may not be valid for non-lognormally distributed aerosols. (If the size distribution deviates from the lognormal, it shall be noted).

Inhalable diameter refers to that aerodynamic diameter of a particle which is considered to be inhalable for the organism under study. It is used to refer to particles which are capable of being inhaled and deposited anywhere within the respiratory tract .

LC_{50} (median lethal concentration) is a statistically derived estimate of a concentration of a substance that can be expected to cause death during exposure or within a fixed time after exposure in 50% of animals exposed for a specified time. The LC_{50} value is a relatively coarse measurement useful only for classification and labeling purposes and an expression of the lethal potential of the test substance following inhalation. The LC_{50} value is expressed as weight of test substance per unit volume of air (milligrams per liter) or parts per million. For clarity, the exposure duration and test animal species should also be specified, *e.g.*, 4 hours LC_{50} in F344.

Mass median aerodynamic diameter (MMAD) is the median aero-dynamic diameter and, along with the geometric standard deviation, is used to describe the particle size distribution of any aerosol statistically, based on the weight and size of the particles. Fifty percent of the particles by weight will be smaller than the median diameter and 50% of the particles will be larger.

(d) *Approaches to the determination of acute toxicity*. (1) EPA recommends the following means to reduce the number of animals used to evaluate acute effects of chemical exposure while preserving its ability to make reasonable judgments about safety:

(i) Using data from substantially similar mixtures. In order to minimize the need for animal testing, the Agency encourages the review of existing acute toxicity information on mixtures that are substantially similar to mixtures under investigation. In certain cases, it may be possible to get enough information to make preliminary hazard evaluations that may reduce the need for further animal testing.

(ii) Limit test. When data on structurally related chemicals are inadequate, a limit test may be considered. In the limit test, a single group of five males and five females is exposed to 2 mg/L for 4 hours, or where this is not possible due to physical or chemical properties of the test substance, the maximum attainable concentration where a particle size distribution having an MMAD between 1 and 4 μm cannot be maintained, using the procedures described under paragraph (e) of this section. For fibers, the bivariate distribution of length and diameter must ensure inhalability. For gases and vapors, the concentrations need not be greater than 50,000 ppm or 50% of the lower explosive limit, whichever is lower. If a test at an aerosol or particulate exposure of 2 mg/L (actual concentration of respirable substance) for 4 hours or, where this is not feasible, the maximum attainable concentration, using the procedures described for this study, produces no observable toxic effects, then a full study using three concentrations will not be necessary. Similarly, if a test at a gas or vapor exposure of 50,000 ppm or 50% of the lower explosive limit, whichever is lower, produces no observable toxic effects, then a full study using three concentrations will not be necessary.

(2) [Reserved]

(e) *Conventional acute toxicity test*—(1) *Principle of the test method*. Several groups of experimental animals are exposed to the test substance in graduated concentrations for a defined period, one concentration being used per group. When a vehicle other than water is used to help generate an appropriate concentration of the substance in the atmosphere, a vehicle control group should be used when historical data are not available or adequate to determine the acute inhalation toxicity of the vehicle. Subsequently, observations of effects and death are made. Animals that die during the test are necropsied and at the conclusion of the test surviving animals are sacrificed and necropsied. This guideline is directed primarily to studies in rodent species but may be adapted for studies in non-rodents. Animals showing severe and enduring signs of distress and pain may need to be sacrificed. Dosing test substances in a way known to cause marked pain and

distress due to corrosive or irritating properties need not be carried out.

(2) *Substance to be tested.* Test, control, and reference substances are discussed under EPA Good Laboratory Practice Standards at 40 CFR part 792, subpart f.

(3) *Test procedures*—(i) *Preparation.* Healthy young adult animals are acclimatized to the laboratory conditions for at least 5 days prior to the test. Before the test, animals are randomized and assigned to the required number of groups.

(ii) *Animal selection*—(A) *Species and strain.* (*1*) Although several mammalian test species may be used, the preferred species is the rat. Commonly used laboratory strains should be employed. If another mammalian species is used, the investigator should provide justification and reasoning for the selection.

(*2*) *Health Status.* Body weight and feed consumption are not sufficient indicators of the health status of animals prior to initiating an inhalation toxicity study. Prior to initiating the study, animals must be monitored for known viral and bacterial respiratory pathogens determined by conventional microbiological assays (e.g., serology). The animals must be free from pathogens at the start of exposure.

(B) *Age.* Young adult rats between 8–12 weeks old at the beginning of dosing, should be used. The weight variation in animals or between groups used in a test should not exceed ±20% of the mean weight of each sex.

(C) *Number of animals and sex.* (*1*) At least five experimentally naive animals are used at each concentration and they must be of one sex. After completion of the study in one sex, at least one group of five animals of the other sex is exposed to establish that animals of this sex are not markedly more sensitive to the test substance. The use of fewer animals may be justified in individual circumstances. Where adequate information is available to demonstrate that animals of the sex tested are markedly more sensitive, testing in animals of the other sex is not required. An acceptable option would be to test at least one group of five animals per sex at one or more dose levels to definitively determine the more sensitive sex prior to conducting the main study.

(*2*) Females must be nulliparous and nonpregnant.

(*3*) In acute toxicity tests with animals of a higher order than rodents, the use of fewer animals per concentration group should be considered.

(D) *Assignment of animals.* (*1*) Each animal must be assigned a unique identification number. A system to assign animals to test groups and control groups randomly is required.

(*2*) Control groups. A concurrent untreated control group is not necessary. Where a vehicle other than water is used to generate an appropriate concentration of the test substance in the atmosphere and historical data are not available or adequate to determine the acute toxicity of the vehicle, a vehicle control group must be used. The vehicle control group must be a sham-treated group. Except for treatment with the test substance, animals in the vehicle control group must be handled in a manner identical to the test-group animals.

(E) *Housing.* The animals may be group-caged by sex, but the number of animals per cage must not interfere with clear observation of each animal. The biological properties of the test substance or toxic effects (e.g., morbidity, excitability) may indicate a need for individual caging. Animals must be housed individually in inhalation chambers during exposure to aerosols.

(*1*) Before and after exposure, the temperature of the animal room should be 22 ±3 °C and the relative humidity 30–70%.

(*2*) Where lighting is artificial, the sequence should be 12 hours light/12 hours dark.

(*3*) For feeding, conventional laboratory diets may be used with an unlimited supply of drinking water.

(F) *Inhalation equipment.* (*1*) Animals can be exposed to the substance by either a nose-only procedure or in a whole-body exposure chamber. Maintenance of slight negative pressure inside the chamber will prevent leakage of the test substance into the surrounding areas. The nose-only exposure procedure is recommended for studies of

aerosols to minimize exposures confounding resultant from test substance ingestion due to test animal fur licking following exposures. Animals must be acclimated to the nose-only exposure chamber prior to study and heat stress minimized during testing.

(*2*) *Inhalation chambers.* The animals must be tested in inhalation equipment designed to sustain a dynamic airflow for nose-only exposures of at least 300 ml/minute/animal or an airflow for whole-body exposures of at least 12 to 15 air changes per hour and ensure an adequate oxygen content of at least 19% and an evenly distributed exposure atmosphere. Where a whole-body chamber is used, its design must minimize crowding by providing individual caging. As a general rule, to ensure stability of a chamber atmosphere, the total ''volume'' of the test animals should not exceed 5% of the volume of the test chamber.

(*3*) *Environmental conditions.* The temperature at which the test is performed must be maintained at 22 °C (±2 °C). Ideally, the relative humidity should be maintained between 40% and 60%, but in certain instances (e.g., tests using water as a vehicle), this may not be practical.

(G) *Physical measurements.* Measurements or monitoring must be made of the following:

(*1*) Chemical purity of the test material must be analyzed. If the test substance is present in a mixture, the mass and composition of the entire mixture, as well as the principal compound, must be measured. If there is some difficulty in measuring chamber analytical concentration due to precipitation, nonhomogeneous mixtures, volatile components, or other factors, additional analyses of components may be necessary.

(*2*) The rate of air flow should be monitored continuously, and must be recorded at least every 30 minutes during the exposure period.

(*3*) The actual concentrations of the test substance must be measured in the breathing zone. During the exposure period, the actual concentrations of the test substance must be held as constant as practicable, monitored continuously or intermittently depending on the method of analysis, and recorded at least three times (*i.e.*, at the beginning, at an intermediate time, and at the end) during the exposure period. Chamber concentration may be measured using gravimetric or analytical methods as appropriate. If trial run measurements are reasonably consistent (±10% for liquid aerosol, gas, or vapor; ±20% for dry aerosol), then a minimum of two measurements are sufficient. If measurements are not consistent, then a minimum of four measurements should be taken.

(*4*) During the development of the generating system, particle size analysis must be performed to establish the stability of aerosol concentrations. During exposure, analysis should be conducted as often as necessary to determine the consistency of particle size distribution. The MMAD particle size range should be between 1–4 μm. The particle size of hygroscopic materials must be small enough when dry to assure that the size of the swollen particle will still be within the 1–4 μm MMAD range. Characterization for fibers must include the bivariate distribution of length and diameter; this distribution must ensure inhalability. Measurements of aerodynamic particle size in the animal's breathing zone must be measured during a trial run. If MMAD values for each exposure level are within 10% of each other, then a minimum of two measurements during the exposures should be sufficient. If pretest measurements are not within 10% of each other, then a minimum of four measurements should be taken.

(*5*) Temperature and humidity must be monitored continuously, and must be recorded at least every 30 minutes.

(iii) *Exposure duration and concentration levels.* (A) Exposure duration. Shortly before exposure, the animals are weighed and then exposed to the test target concentration in the designated apparatus for 4 hour exposure period after equilibration of the chamber concentrations. The target concentration is defined by an average of 5% for gases and vapors and 15% for particles and aerosols. The animals are weighed again at the conclusion of the exposure period to determine body weight change. Other durations may be needed to meet specific requirements.

Food must be withheld during exposure. Water may also be withheld in certain circumstances.

(B) *Exposure concentration levels.* At least three concentration levels and a vehicle control group, if required (see paragraph (e)(3)(ii)(D)(*2*) of this section), must be used. The concentration levels should be spaced appropriately to produce a concentration-response curve and permit an estimation of the median lethal concentration (LC_{50}). The concentrations can either be linearly or logarithmically spaced depending on the anticipated steepness of the concentration-response curve. A rationale for concentration selection should be provided to indicate that the selected concentrations will maximally support detection of concentration-response relationship. The high concentration should be clearly toxic or a limit concentration, but should not result in an incidence of fatalities that would preclude a meaningful evaluation of the data. The lowest concentration should define a no-observed-effects level (NOEL). Range-finding studies using single animals may help to estimate the positioning of the test groups so that no more than three concentration levels will be necessary.

(C) When the physical and chemical properties of the test substance show a low flash point or the test substance is otherwise known or thought to be explosive, care must be taken to avoid exposure level concentrations that could result in an exposure chamber explosion during the test.

(iv) *Observation period.* The observation period must be at least 14 days. However, the duration of observation should not be fixed rigidly. It should be determined by the toxic reactions, rate of onset, and length of recovery period, and thus may be extended when considered necessary. The time at which signs of toxicity appear, the duration of the signs observed, and the time of death must be recorded and are important, especially if there is a tendency for delayed effects.

(v) *Observation of animals.* (A) A careful clinical examination must be made at least once each day.

(B) Additional observations should be made daily with appropriate actions taken to minimize loss of animals to the study, e.g., necropsy or refrigeration of those animals found dead and isolation of weak or moribund animals.

(C) Observations must be detailed and carefully recorded, preferably using explicitly defined scales. Observations should include, but not be limited to, evaluation of skin and fur, eyes and mucous membranes, respiratory and circulatory effects, autonomic effects such as salivation, central nervous system effects, including tremors and convulsions, changes in the level of activity, gait and posture, reactivity to handling or sensory stimuli, altered strength, and stereotypies or bizarre behavior (e.g., self mutilation, walking backwards).

(D) Individual weights of animals must be determined pre-exposure and post-exposure, weekly after exposure, and at death. Changes in weights should be calculated and recorded when survival exceeds 1 day.

(E) The time of death should be recorded as precisely as possible.

(vi) *Gross pathology.* (A) At the end of the test, surviving animals must be weighed, sacrificed and a gross necropsy must be performed on all animals under test, with particular reference to any changes in the respiratory tract. All gross pathology changes must be recorded.

(*1*) The gross necropsy must include examination of orifices and the cranial, thoracic, and abdominal cavities, and contents.

(*2*) At least the lungs, liver, kidneys, adrenals, brain, and gonads should be weighed wet, as soon as possible after dissection to avoid drying.

(*3*) Optionally, the following organs and tissues, or representative samples thereof, may be preserved in a suitable medium for possible future histopathological examination: All gross lesions; brain-including sections of medulla/pons; cerebellar cortex and cerebral cortex; pituitary; thyroid/parathyroid; thymus; heart; sternum with bone marrow; salivary glands; liver; spleen; kidneys; adrenals; pancreas; gonads; accessory genital organs (epididymis, prostrate, and, if present, seminal vesicles); aorta; skin; gall bladder (if present); esophagus; stomach; duodenum; jejunum; ileum; cecum; colon; rectum; urinary bladder;

representative lymph nodes; thigh musculature; peripheral nerve; spinal cord at three levels cervical, midthoracic, and lumbar; and eyes. Respiratory tract tissues should be perfusion preserved in a suitable medium.

(B) If necropsy cannot be performed immediately after a dead animal is discovered during the observation period, the animal should be refrigerated (not frozen) at temperatures low enough to minimize autolysis. Necropsies should be performed as soon as possible after death (normally within 24 to 48 hours).

(vii) *Additional evaluations.* In animals surviving 24 hours or more, microscopic examination of organs showing evidence of gross pathology should be considered since it may yield useful information on the nature of acute toxic effects.

(f) *Data and reporting*—(1) *Treatment of results.* Data must be summarized in tabular form showing for each test group the number of animals at the start of the test, body weights, time of death of individual animals at different exposure levels, number of animals displaying other signs of toxicity, description of toxic effects and necropsy findings. The method used for calculation of the LC_{50} or any other parameters must be specified and referenced. Some acceptable methods for parameter estimation are described in the references described in paragraphs (g)(1), (g)(2), and (g)(3) of this section.

(2) *Evaluation of results.* The LC_{50} value should be considered in conjunction with the observed toxic effects and the necropsy findings. The evaluation should include the relationship, if any, between exposure of animals to the test substance and the incidence and severity of all abnormalities including behavioral and clinical abnormalities, gross lesions, body weight changes, mortality, and other toxic effects.

(3) *Test report.* In addition to the reporting requirements specified under EPA Good Laboratory Practice Standards at 40 CFR part 792, subpart J, the following specific information must be reported. The test report shall include:

(i) Test conditions. (A) Description of exposure apparatus including design, type, dimensions.

(B) Source of air, system for generating the test article as particle, aerosol, gas, or vapor.

(C) Method for conditioning air, equipment for measuring temperature, humidity, particle size or particulate aerosol concentration size, and actual concentration.

(D) Treatment of exhaust air and the method of housing the animals in a test chamber when this is used.

(ii) Exposure data. The exposure data must be tabulated and presented with mean values and a measure of variability (e.g., standard deviation) and should include:

(A) Chemical purity of the test material.

(B) Airflow rates through the inhalation equipment.

(C) Temperature and humidity of the air.

(D) Nominal concentration (total amount of test substance fed into the inhalation equipment divided by volume of air).

(E) Actual (analytical or gravimetric) concentration in test breathing zone.

(F) Particle size distribution (calculated MMAD and GSD) and the bivariate distribution of fiber length and diameter, where appropriate.

(G) Explanation as to why the desired chamber concentration and/or particle size could not be achieved (if applicable), and the efforts taken to comply with these aspects of this section.

(iii) Species, strain, sex, and source of test animals.

(iv) Method of randomization in assigning animals to test and control groups.

(v) Rationale for selection of species, if other than that recommended.

(vi) Results. Tabulation of individual and test group data by sex and exposure concentration level (e.g., number of animals exposed, number of animals showing signs of toxicity and number of animals that died or were sacrificed during the test).

(A) Description of toxic effects including time of onset, duration, reversibility, and relationship to the exposure concentration levels.

(B) Pre-exposure and post-exposure body weight change in animals, and

weight change during the observation period.

(C) Time of dosing and time of death during or following exposure.

(D) Concentration-response curves for mortality and other toxic effects (when permitted by the method of determination).

(E) Gross pathology necropsy findings in the test animals and vehicle control animals, if included. Data must be tabulated to show the counts and incidence of gross alterations observed for each group tested and the number of animals affected by each type of lesion along with the location and frequency of each type of lesion.

(F) Histopathology findings and any additional evaluations (e.g., clinical chemistry), if performed.

(vii) Description of any pretest conditioning, including diet, quarantine and treatment for disease.

(viii) Description of caging conditions, including: number (or change in number) of animals per cage, bedding material, ambient temperature and humidity, photoperiod, and identification of diet of test animals.

(ix) Manufacturer (source), lot number, and purity of test substance.

(x) Identification and composition of any vehicles (e.g., diluents, suspending agents, and emulsifiers) or other materials , if used in administering the test substance.

(xi) A list of references cited in the body of the report. References to any published literature used in developing the test protocol, performing the testing, making and interpreting observations, and compiling and evaluating the results.

(g) *References*. For additional background information on this test guideline, the following references should be consulted. These references are available at the addresses in § 700.17(b)(1) and (2) of this chapter.

(1) Chanter, D.O. and Heywood, R. The L_{D50} test: some considerations of precision. *Toxicology Letters* 10:303 307 (1982).

(2) Finney, D.G. Chapter 3 Estimation of the median effective dose, Chapter 4 Maximum likelihood estimation. *Probit Analysis*. 3rd Ed. (Cambridge, London. (1971).

(3) Finney, D.J. The Median Lethal Dose and Its Estimation, *Archives of Toxicology* 56:215 218 (1985).

(4) Organization for Economic Cooperation and Development. OECD Guidelines for the Testing of Chemicals. Final Draft OECD Guideline 425: Acute Oral Toxicity: Up-and-Down Procedure to be adopted in the Tenth Addendum to the OECD Guidelines for the Testing of Chemicals.

(5) Organization for Economic Cooperation and Development. OECD Guidelines for Testing of Chemicals. Guideline 403: Acute Inhalation Toxicity. Adopted: May 12, 1981.

(6) Organization for Economic Cooperation and Development. OECD Guidelines for Testing of Chemicals. Guideline 420: Acute Oral Toxicity Fixed Dose Method. Adopted: July 17, 1992.

(7) Organization for Economic Cooperation and Development. OECD Guidelines for Testing of Chemicals. Guideline 423: Acute Oral Toxicity Acute Toxic Class Method. Adopted: March 22, 1996.

(8) U. S. EPA. Interim Policy for Particle Size and Limit Concentration Issues in Inhalation Toxicity Studies. 2/1/94. Health Effects Division, Office of Pesticide Programs.

[65 FR 78776, Dec. 15, 2000, as amended at 77 FR 42694, Aug. 3, 2012]

§ 799.9135 TSCA acute inhalation toxicity with histopathology.

(a) *Scope*. This section is intended to meet the testing requirements under section 4 of the Toxic Substances Control Act (TSCA). In the assessment and evaluation of the potential human health effects of chemical substances, it is appropriate to test for acute inhalation toxic effects. The goals of this test are to characterize the exposure-response relationship for sensitive endpoints following acute exposure and to characterize toxicologic response following acute high exposures. The latter is of particular concern in relation to spills and other accidental releases. This testing is designed to determine the gross pathology and histopathology resulting from acute inhalation exposure to a substance. Because toxic effects on the respiratory

tract are of particular concern following inhalation exposure, several indicators of respiratory toxicity consisting of histopathology on fixed tissue and evaluation of cellular and biochemical parameters in bronchoalveolar lavage fluid should be employed. The respiratory histopathology consists of specialized techniques to preserve tissues of the respiratory tract in order to allow detailed microscopic examination to identify adverse effects of chemical substances on this organ system. The bronchoalveolar lavage is designed to be a rapid screening test to provide an early indicator of pulmonary toxicity by examining biochemical and cytologic endpoints of material from the lungs of animals exposed to potentially toxic chemical substances. These acute tests are designed to assess the relationship, if any, between the animals' exposure to the test substance and to demonstrate relationship between the animals' exposure and the incidence and severity of observed abnormalities, including gross or histopathologic lesions, body weight changes, effects on mortality, and any other toxic effects. These acute tests are not intended to provide a complete evaluation of the toxicologic effects of a substance, and additional functional and morphological evaluations may be necessary to assess completely the potential effects produced by a chemical substance. Additional tests may include longer-term exposures, or more in-depth evaluation of specific organ systems as indicated by signs of toxicity following acute exposure.

(b) *Source*. This a new section developed by the United States Environmental Protection Agency.

(c) *Definitions*. The following definitions apply to this section.

Aerodynamic diameter (d_{ae}) refers to the size of particles. It is the diameter of a sphere of unit density that behaves aerodynamically (has the same settling velocity in air) as the particle of the test substance. It is used to compare particles of different size, shape, and density, and to predict where in the respiratory tract such particles may be primarily deposited.

Exposure response is the relationship between the exposure concentration and the measured toxic response, whether expressed as a group mean ±standard deviation) in the case of a continuous variable or as incidence in the case of a quantal variable. This definition should not preclude the exploration of other dose metrics in establishing this relationship.

Geometric standard deviation (GSD) is a dimensionless number equal to the ratio between the mass median aerodynamic diameter (MMAD) and either 84% or 16% of the diameter size distribution (e.g., MMAD = 2 μm; 84% = 4 μm; GSD = 4/2 = 2.0.) The MMAD, together with the GSD, describe the particle size distribution of an aerosol. Use of the GSD may not be valid for non-lognormally distributed aerosols. (If the size distribution deviates from the lognormal, it shall be noted).

Inhalability is the ratio of the number concentration of particles of a certain aerodynamic diameter, d_{ae}, that are inspired through the nose or mouth to the number concentration of the same d_{ae} present in the inspired volume of ambient air. In humans, inhalability can exceed 15 μm d_{ae}, whereas inhalability dramatically decreases for particles above 4 μm d_{ae} in small laboratory animals.

Lower respiratory tract consists of those structures of the respiratory tract below the larynx.

Mass geometric mean aerodynamic diameter or the mass median aerodynamic diameter (MMAD) is the calculated aerodynamic diameter that divides the particles of an aerosol (a gaseous suspension of fine liquid or solid particles) in half, based on the weight of the particles. By weight, 50% of the particles will be larger than the MMAD and 50% of the particles will be smaller than the MMAD.

Particle regional deposition is the fraction of inhaled particles that deposits in the specific region of the respiratory tract. The major mechanisms of particle deposition in the respiratory tract include impaction, sedimentation, diffusion, interception, and electrostatic precipitation. The deposition mechanism that is dominant for a given region depends on the respiratory tract architecture and ventilation rate of the species and the aerosol particle size and distribution. The respiratory tract

in both humans and various experimental mammals can be divided into three regions on the basis of structure, size, and function:

(1) The extrathoracic region or upper respiratory tract that includes the nose, mouth, nasopharynx, oropharynx, laryngopharynx, and larynx.

(2) The tracheobronchial region that includes the trachea, bronchi, and bronchioles (including the terminal bronchioles).

(3) The alveolar region that includes the respiratory bronchioles (if present in the species), alveolar ducts, alveolar sacs, and alveoli.

Respiratory effects are any adverse effects on the structure or functions of the respiratory system related to exposure to a chemical substance.

Target organ is any organ found to be a target of toxicity in the 4-hour (hr) high concentration group as a result of:

(1) The initial histopathologic examination (respiratory tract, liver, kidney, gross lesions); or

(2) The retrospective histopathologic examination of archived organs triggered by their identification as targets of toxicity in a 90-day study.

Toxic effects are any adverse changes (a change that is statistically and biologically significant) in the structure or function of an experimental animal as a result of exposure to a chemical substance.

Upper respiratory tract consists of those structures of the respiratory tract above and including the larynx.

(d) *Principle of the test method*. The test substance shall be administered to several groups of experimental animals; one concentration level and duration being used per group. Bronchoalveolar lavage shall be used to evaluate early effects on the respiratory system by examining changes in the content of the lavage fluid of the lung. At 24 hrs following exposure, the animals shall be sacrificed and necropsied, and tissue samples from the respiratory tract and other major organs will be prepared for microscopic examination. The exposure levels at which significant toxic effects on the respiratory organ system are produced are compared to those levels that produce other toxic effects. As triggered by the results of the 4-hr test, additional exposure periods of 1 hr and 8 hrs will be required to determine the effect of exposure time on the toxicity observed. A 1-hr exposure study can be elected as an option to provide data suitable for risk assessment for very short duration exposures as may occur from chemical releases. In the absence of adequate toxicological data for 1-hr exposure, the Agency will extrapolate to shorter-term exposures from the 4-hr data on the basis of concentration alone. This is a conservative method of extrapolation, consistent with general Agency methods for deriving criteria for short-term exposure from longer-term studies (a concentration x time extrapolation would result in higher concentration for a shorter duration).

(e) *Test procedures*—(1) *Animal selection*—(i) *Species*. In general, the laboratory rat and mouse should be used. Under some circumstances, other species, such as the hamster or guinea pig, may be more appropriate, and if these or other species are used, justification should be provided.

(ii) *Strain*. If rats and mice are used, the use of the F344 rat and the B6C3F1 mouse is preferred to facilitate comparison with existing data.

(iii) *Age*. Young adults shall be used. The weight variation of animals used in a test should not exceed ±20% of the mean weight for each species.

(iv) *Sex*. Equal numbers of animals of each sex shall be used for each concentration level. The females shall be nulliparous and nonpregnant.

(v) *Health status*. Body weight and feed consumption are not sufficient indicators of the health status of animals prior to initiating an inhalation toxicity study. Prior to initiating the study, animals shall be monitored for known viral and bacterial respiratory pathogens determined by conventional microbiological assays (e.g., serology). The animals shall be free from pathogens at the start of exposure.

(2) *Number of animals*. At least five males and five females shall be used in each concentration/duration and control group. Animals shall be randomly assigned to treatment and control groups.

(3) *Control groups*. The control group shall be a sham-treated group. Except for treatment with the test substance,

animals in the control group shall be handled in a manner identical to the test-group animals. Where a vehicle is used to help generate an appropriate concentration of the substance in the atmosphere, a vehicle control group shall be used. If the 4- and 8-hr exposure studies are conducted concurrently, a concurrent 8-hr sham-exposed control group may serve as the control group for both the 4-hr and the 8-hr exposure studies, provided there is adequate historical control data showing no changes in histopathology or bronchoalveolar lavage of controls exposed for 4 and 8 hrs. Similarly, if the optional 1-hr exposure study is conducted concurrently with the 4- and/or 8-hr study, the concurrent control group for those studies may also be used for the 1-hr study, provided adequate historical control data show no changes in histopathology or bronchoalveolar lavage between controls exposed for these time periods.

(4) *Concentration level and concentration selection*. For the 4-hr study, at least three concentrations shall be used in addition to the control group. Ideally, the data generated from the test should be sufficient to produce an exposure-response curve. The concentrations can either be linearly or logarithmically spaced depending on the anticipated steepness of the concentration-response curve. A rationale for concentration selection should be provided to indicate that the selected concentrations will maximally support detection of concentration-response relationship. The high concentration should be clearly toxic or a limit concentration, but should not result in an incidence of fatalities that would preclude a meaningful evaluation of the data. The lowest concentration should define a no-observed-adverse-effects level (NOAEL).

(i) *Limit concentration*. For aerosols and particles, the high concentrations need not be greater than 2 mg/L, or concentrations that cannot maintain a particle size distribution having an MMAD between 1 and 4 μm (i.e., a particle size that permits inhalability and deposition throughout the respiratory tract). For fibers, the bivariate distribution of length and diameter must ensure inhalability. For gases and vapors, the concentrations need not be greater than 50,000 ppm or 50% of the lower explosive limit, whichever is lower. If a test at an aerosol or particulate exposure of 2 mg/L (actual concentration of respirable substance) for 4 hrs or, where this is not feasible, the maximum attainable concentration, using the procedures described for this study, produces no observable toxic effects, then a full study using three concentrations will not be necessary. Similarly, if a test at a gas or vapor exposure of 50,000 ppm or 50% of the lower explosive limit, whichever is lower, produces no observable toxic effects, then a full study using three concentrations will not be necessary.

(ii) *8-hr study and optional 1-hr study*. If the 8-hr study is triggered, three concentrations shall be tested. These concentrations should allow for the determination of an effect level and a NOAEL. If the option to perform a 1-hr study is elected, three concentrations shall be selected and tested in a similar manner.

(5) *Inhalation exposure*. Animals can be exposed to the substance by either a nose-only procedure or in a whole-body exposure chamber.

(i) *Inhalation chambers*. The animals shall be tested in inhalation equipment designed to sustain a dynamic airflow for nose-only exposures of at least 300 ml/minute/animal or an airflow for whole-body exposures of at least 12 to 15 air changes per hr and ensure an adequate oxygen content of at least 19% and an evenly distributed exposure atmosphere. Where a whole-body chamber is used, its design shall minimize crowding by providing individual caging. As a general rule, to ensure stability of a chamber atmosphere, the total ''volume'' of the test animals should not exceed 5% of the volume of the test chamber.

(ii) *Environmental conditions*. The temperature at which the test is performed shall be maintained at 22 °C (±2 °C). Ideally, the relative humidity should be maintained between 40% and 60%, but in certain instances (e.g., tests using water as a vehicle), this may not be practical.

(iii) *Exposure periodicity*. For acute testing, the exposure design shall enable 4 hrs of exposure to the target

concentrations, as defined by an average of ±5% for gases and vapors and ±15% for particles and aerosols. If triggered by the results of the 4-hr exposure, additional testing shall be conducted in a comparable manner using an 8-hr exposure period.

(6) *Physical measurements.* Measurements or monitoring shall be made of the following:

(i) Chemical purity of the test material shall be analyzed.

(ii) The rate of airflow shall be monitored continuously, but shall be recorded at least every 30 minutes.

(iii) The actual concentrations of the test substance shall be measured in the breathing zone. During the exposure period, the actual concentrations of the test substance shall be held as constant as practical, monitored continuously or intermittently depending on the method of analysis, and recorded at least at the beginning, at an intermediate time, and at the end of the exposure period. Well-established and published monitoring methods should be used where available. If no standard methods are available, then accuracy and precision information must be supplied.

(iv) During the development of the generating system, appropriate particle size analysis shall be performed to establish the stability of the aerosol. During exposure, analysis should be conducted as often as necessary to determine the consistency of particle size distribution. The particle size distribution shall have an MMAD between 1 and 4 μm. The particle size of hygroscopic materials shall be small enough when dry to assure that the size of the particle at saturation will still have an MMAD between 1 and 4 μm. Characterization for fibers shall include the bivariate distribution of length and diameter; this distribution must ensure inhalability.

(v) If the test substance is present in a mixture, the mass and composition of the entire mixture, as well as the principal compound, shall be measured.

(vi) Temperature and humidity shall be monitored continuously, but shall be recorded at least every 30 minutes.

(7) *Food and water during exposure period.* Food shall be withheld during exposure. Water may also be withheld in certain cases.

(8) *Observation period.* The bronchoalveolar lavage and respiratory pathology shall be conducted 24 hrs following exposure to allow expression of signs of toxicity. There is concern that some latency time will be required to allow migration of cells and macromolecules into the lungs following exposure, and that some pathology may require macromolecular synthesis or degradation before cell damage develops.

(9) *Gross pathology.* (i) All animals shall be subjected to a full gross necropsy which includes examination of orifices and the cranial, thoracic, and abdominal cavities and their contents.

(ii) At least the lungs, liver, kidneys, adrenals, brain, and gonads shall be weighed wet, as soon as possible after dissection to avoid drying.

(iii) The following organs and tissues, or representative samples thereof, shall be preserved in a suitable medium for possible future histopathological examination: All gross lesions; brain-including sections of medulla/pons; cerebellar cortex and cerebral cortex; pituitary; thyroid/parathyroid; thymus; heart; sternum with bone marrow; salivary glands; liver; spleen; kidneys; adrenals; pancreas; gonads; accessory genital organs (epididymis, prostrate, and, if present, seminal vesicles); aorta; skin; gall bladder (if present); esophagus; stomach; duodenum; jejunum; ileum; cecum; colon; rectum; urinary bladder; representative lymph nodes; thigh musculature; peripheral nerve; spinal cord at three levels cervical, midthoracic, and lumbar; and eyes. Respiratory tract tissues shall also be preserved in a suitable medium.

(10) *Histopathology.* The following histopathology shall be performed:

(i) Full histopathology shall be performed on the respiratory tract, liver and kidney of all animals in the control and high concentration groups. The histopathology of the respiratory tract is described under paragraph (e)(11) of this section.

(ii) All gross lesions which differ from controls in frequency, distribution, type, or severity in all concentration groups.

(iii) Target organs in all animals, as indicated by the observations in the high concentration group in this study. Histopathologic examination of target organs in animals at all concentration levels (rather than only to the extent necessary to define the NOAEL) can support the application of exposure-response analyses such as the benchmark concentration approach.

(iv) Archived organs identified as targets of toxicity from results of the 90-day study (if a 90-day study is required for this substance) should be elevated in high concentration animals of the 4-hr acute study to determine if they are also targets of acute toxicity.

(11) *Respiratory tract histopathology.* (i) Representative sections of the respiratory tract shall be examined histologically. These shall include the trachea, major conducting airways, alveolar region, terminal and respiratory bronchioles (if present), alveolar ducts and sacs, and interstitial tissues.

(ii) Care shall be taken that the method used to kill the animal does not result in damage to the tissues of the upper or lower respiratory tract. The lungs shall be infused with a fixative while in an inflated state of fixed pressure.

(iii) The upper respiratory tract shall be examined for histopathologic lesions. This examination shall use a minimum of four sections located as specified under paragraphs (e)(11)(iii)(A) through (e)(11)(iii)(D) of this section. An evaluation of the nasal vestibule shall be conducted. The method described by the reference under paragraph (h)(11) of this section should be given consideration. The use of additional sections shall be left to the discretion of the study pathologist, but consideration should be given to additional sections as recommended in the reference under paragraph (h)(8) of this section to ensure adequate evaluation of the entire upper respiratory tract, particularly the nasopharyngeal meatus. The following transverse sections shall be examined:

(A) Immediately posterior to the upper incisor teeth.

(B) At the incisor papilla.

(C) At the second palatal ridge.

(D) At the level of the first upper molar teeth.

(iv) The laryngeal mucosa shall be examined for histopathologic changes. Sections of the larynx to be examined include the epithelium covering the base of the epiglottis, the ventral pouch, and the medial surfaces of the vocal processes of the arytenoid cartilages.

(12) *Bronchoalveolar lavage.* (i) Animals can be exposed to the substance by either a nose-only procedure or in a whole-body exposure chamber.

(ii) Care should be taken that the method used to kill the animal results in minimum changes in the fluid of the lungs of the test animals.

(iii) At the appropriate time, the test animals shall be killed and the heart-lung including trachea removed in bloc. Alternatively, lungs can be lavaged in situ. If the study will not be compromised, one lobe of the lungs may be used for lung lavage while the other is fixed for histologic evaluation. The lungs should be lavaged using physiological saline. The lavages shall consist of two washes, each of which consists of approximately 80% (e.g., 5 ml in rats and 1 ml in mice) of the total lung volume. Additional washes merely tend to reduce the concentrations of the material collected. The lung lavage fluid shall be stored on ice at 5 °C until assayed.

(iv) The following parameters shall be determined in the lavage fluid as indicators of cellular damage in the lungs: total protein, cell count, and percent leukocytes. In addition, a phagocytosis assay shall be performed to determine macrophage activity. Assay methods described in the references under paragraphs (h)(1) and (h)(3) of this section may be used.

(13) *Combined protocol.* The tests described may be combined with any other toxicity study, as long as none of the requirements of either are violated by the combination.

(f) *Triggered testing.* If no adverse effects are seen in the 4-hr study as compared with controls, no further testing is necessary. If the 4-hr study shows positive effects in histopathology or the bronchoalveolar lavage, an 8-hr study shall be conducted. Only those tissues showing positive results in the

4-hr study must be pursued in the follow-up 8-hr study. Similarly, if the option to perform a 1-hr study is exercised, only those tissues showing positive results in the 4-hr study shall be pursued.

(g) *Data reporting and evaluation*. The final test report shall include the following information:

(1) *Description of equipment and test methods*. A description of the general design of the experiment and any equipment used shall be provided.

(i) Description of exposure apparatus, including design, type, dimensions, source of air, system for generating particles, aerosols, gasses, and vapors, method of conditioning air, treatment of exhaust air, and the method of housing animals in a test chamber.

(ii) Description of the equipment for measuring temperature, humidity, and particulate aerosol concentration and size.

(iii) Exposure data shall be tabulated and presented with mean values and measure of variability (e.g., standard deviation) and should include:

(A) Chemical purity of the test material.

(B) Airflow rates through the inhalation equipment.

(C) Temperature and humidity of air.

(D) Nominal concentration (total amount of test substance fed into the inhalation equipment divided by the volume of air).

(E) Actual concentration in test breathing zone.

(F) Particle size distribution (e.g., MMAD with GSD) and the bivariate distribution of fiber length and diameter, where appropriate.

(2) *Results*—(i) *General group animal data*. The following information shall be arranged by test group exposure level.

(A) Number of animals exposed.

(B) Number of animals dying.

(C) Number of animals showing overt signs of toxicity.

(D) Pre- and post-exposure body weight change in animals, and weight change during the observation period.

(ii) *Counts and incidence of gross alterations observed at necropsy in the test and control groups*. Data shall be tabulated to show:

(A) The number of animals used in each group and the number of animals in which any gross lesions were found.

(B) The number of animals affected by each different type of lesion, and the locations and frequency of each type of lesion.

(iii) *Counts and incidence of general histologic alterations in the test group*. Data shall be tabulated to show:

(A) The number of animals used in each group and the number of animals in which any histopathologic lesions were found.

(B) The number of animals affected by each different type of lesion, and the locations, frequency, and average grade of each type of lesion.

(iv) *Counts and incidence of respiratory histopathologic alterations by the test group*. Data shall be tabulated to show:

(A) The number of animals used in each group and the number of animals in which any histopathologic lesions were found.

(B) The number of animals affected by each different type of lesion, and the locations, frequency, and average grade of each type of lesion.

(v) *Results of the bronchoalveolar lavage study*. Data shall be tabulated to show:

(A) The amount of administered lavage fluid and recovered lavage fluid for each test animal.

(B) The magnitude of change of biochemical and cytologic indices in lavage fluids at each test concentration for each animal.

(C) Results shall be quantified as amount of constituent/mL of lavage fluid. This assumes that the amount of lavage fluid recovered is a representative sample of the total lavage fluid.

(3) *Evaluation of data*. The findings from this acute study should be evaluated in the context of preceding and/or concurrent toxicity studies and any correlated functional findings. The evaluation shall include the relationship between the concentrations of the test substance and the presence or absence, incidence, and severity of any effects. The evaluation should include appropriate statistical analyses, for example, parametric tests for continuous data and non-parametric tests for the remainder. Choice of analyses should

consider tests appropriate to the experimental design, including repeated measures. The report must include concentration-response curves for the bronchoalveolar lavage and tables reporting observations at each concentration level for necropsy findings and gross, general, and respiratory system histopathology.

(h) *Reference*. For additional background information on this test guideline, the following references should be consulted. These references are available at the addresses in § 700.17(b)(1) and (2) of this chapter.

(1) Burleson, G.R., Fuller, L.B., Ménache, M.G., and Graham, J.A. Poly (I): poly (C)-enhanced alveolar peritoneal macrophage phagocytosis: Quantification by a new method utilizing fluorescent beads. *Proceedings of the Society of Experimental Biology and Medicine*. 184:468–476 (1987).

(2) Gardner, D.E., Crapo, J.D., and McClellan, R.O. (Eds.) *Toxicology of the Lung*. (Raven Press, New York, 1993) pp. i–xii, 1–30.

(3) Gilmour, G.I., and Selgrade, M.K. A comparison of the pulmonary defenses against streptococcal infection in rats and mice following O3 exposure: Differences in disease susceptibility and neutrophil recruitment. *Toxicology and Applied Pharmacology*. 123:211–218 (1993).

(4) Henderson, R.F., Benson, J.M., Hahn, F.F., Hobbs, C.H., Jones, R.K., Mauderly, J.L., McClellan, R.O., and Pickrell, J.A. New approaches for the evaluation of pulmonary toxicity: Bronchoalveolar lavage fluid analysis. *Fundamental and Applied Toxicology*. 5:451–458 (1985).

(5) Henderson, R.F. Use of bronchoalveolar lavage to detect lung damage. *Environmental Health Perspectives*. 56:115–129 (1984).

(6) Henderson, R.F., Rebar, A.H., Pickrell, J.A., and Newton, G.J. Early damage indicators in the lung. III. Biochemical and cytological response of the lung to inhaled metal salts. *Toxicology and Applied Pharmacology*. 50:123–136 (1979).

(7) McClellan, R.O. and Henderson, R.F. (Eds.) Second edition. *Concepts in Inhalation Toxicology*. (Taylor and Francis, Washington, DC, 1995) pp.i–xxiv, 1–24, 441–470.

(8) Mery, S., Gross, E.A., Joyner, D.R., Godo, M., and Morgan, K.T. Nasal Diagrams: A Tool for Recording the Distribution of Nasal Lesions in Rats and Mice. *Toxicologic Pathology*. 22:353–372 (1994).

(9) Phalen, R.F. (Ed) *Methods in Inhalation Toxicology*. (CRC Press, Boca Raton, FL, 1997) pp. i–xii, 1–12.

(10) Renne, R.A., Gideon, K.M., Miller, R.A., Mellick, P.W., and Grumbein, S.L. Histologic methods and interspecies variations in the laryngeal histology of F344/N rats and B6C3F1 mice. *Toxicology and Pathology*. 20:44–51 (1992).

(11) Young, J.T. Histopathologic examination of the rat nasal cavity. *Fundamental and Applied Toxicology*. 1:309–312 (1981).

[62 FR 43824, Aug. 15, 1997, as amended at 77 FR 46294, Aug. 3, 2012]

§ 799.9305 TSCA Repeated dose 28–day oral toxicity study in rodents.

(a) *Scope*—(1) *Applicability*. This section is intended to meet testing requirements of the Toxic Substances Control Act (TSCA) (15 U.S.C. 2601).

(2) *Source*. The source material used in developing this TSCA test guideline is the Office of Prevention, Pesticides and Toxic Substances (OPPTS) harmonized test guideline 870.3050 (July 2000, final guidelines). This source is available at the address in paragraph (h) of this section.

(b) *Purpose*. (1) In the assessment and evaluation of the toxic characteristics of a chemical, the determination of oral toxicity using repeated doses may be carried out after initial information on toxicity has been obtained by acute testing. This study provides information on the possible health hazards likely to arise from repeated exposure over a relatively limited period of time. The method comprises the basic repeated dose toxicity study that may be used for chemicals on which a 90–day study is not warranted (*e.g.*, when the production volume does not exceed certain limits) or as a preliminary to a long term study. The duration of exposure should normally be 28 days although a 14–day study may be appropriate in certain circumstances; justification for use of a 14–day exposure period should be provided.

(2) This section places emphasis on neurological effects as a specific endpoint, and the need for careful clinical observations of the animals, so as to obtain as much information as possible, is stressed. The method should identify chemicals with neurotoxic potential, which may warrant further in-depth investigation of this aspect. In addition, the method may give an indication of immunological effects and reproductive organ toxicity.

(c) *Definitions.* The definitions in section 3 of TSCA and in 40 CFR Part 792—Good Laboratory Practice Standards apply to this section. The following definitions also apply to this section.

Dosage is a general term comprising of dose, its frequency and the duration of dosing.

Dose is the amount of test substance administered. Dose is expressed as weight (g, mg) or as weight of test substance per unit weight of test animal (e.g., mg/kg), or as constant dietary concentrations (parts per million (ppm)).

No-observed-effects level (NOEL) is the maximum dose used in a study which produces no adverse effects. The NOEL is usually expressed in terms of the weight of a test substance given daily per unit weight of test animals (milligrams per kilograms per day).

(d) *Principle of the test.* The test substance is orally administered daily in graduated doses to several groups of experimental animals, one dose level per group for a period of 28 days. During the period of administration the animals are observed closely, each day for signs of toxicity. Animals which die or are sacrificed during the test are necropsied and at the conclusion of the test surviving animals are sacrificed and necropsied.

(e) *Description of the method*—(1) *Selection of animal species.* The preferred rodent species is the rat, although other rodent species may be used. Commonly used laboratory strains of young healthy adult animals should be employed. The females should be nulliparous and non-pregnant. Dosing should begin as soon as possible after weaning and, in any case, before the animals are 9 weeks old. At the commencement of the study the weight variation of animals used should be minimal and not exceed ±20% of the mean weight of each sex. Where a repeated dose oral study is conducted as a preliminary to a long term study, preferably animals from the same strain and source should be used in both studies.

(2) *Housing and feeding conditions.* The temperature in the experimental animal room should be 22 °C (±3 °C). Although the relative humidity should be at least 30% and preferably not to exceed 70% other than during room cleaning, the aim should be 50–60%. Lighting should be artificial, the sequence being 12 hours light, 12 hours dark. For feeding, conventional laboratory diets may be used with an unlimited supply of drinking water. The choice of diet may be influenced by the need to ensure a suitable admixture of a test substance when administered by this method. Animals may be housed individually, or be caged in small groups of the same sex; for group caging, no more than five animals should be housed per cage.

(3) *Preparation of animals.* Healthy young adult animals must be randomly assigned to the control and treatment groups. Cages should be arranged in such a way that possible effects due to cage placement are minimized. The animals are identified uniquely and kept in their cages for at least 5 days prior to the start of the study to allow for acclimatization to the laboratory conditions.

(4) *Preparation of doses.* (i) The test compound must be administered by gavage or via the diet or drinking water. The method of oral administration is dependent on the purpose of the study, and the physical/chemical properties of the test material.

(ii) Where necessary, the test substance is dissolved or suspended in a suitable vehicle. It is recommended that, wherever possible, the use of an aqueous solution/suspension be considered first, followed by consideration of a solution/emulsion in oil (e.g., corn oil) and then by possible solution in other vehicles. For vehicles other than water the toxic characteristics of the vehicle must be known. The stability of the test substance in the vehicle should be determined.

(f) *Procedure*—(1) *Number and sex of animals.* At least 10 animals (five female and five male) should be used at

each dose level. If interim sacrifices are planned, the number should be increased by the number of animals scheduled to be sacrificed before the completion of the study. Consideration should be given to an additional satellite group of 10 animals (five per sex) in the control and in the top dose group for observation of reversibility, persistence, or delayed occurrence of toxic effects, for at least 14 days post treatment.

(2) *Dosage.* (i) Generally, at least three test groups and a control group should be used, but if from assessment of other data, no effects would be expected at a dose of 1000 mg/kg bodyweight/per day, a limit test may be performed. If there are no suitable data available, a range finding study may be performed to aid the determination of the doses to be used. Except for treatment with the test substance, animals in the control group should be handled in an identical manner to the test group subjects. If a vehicle is used in administering the test substance, the control group should receive the vehicle in the highest volume used.

(ii) Dose levels should be selected taking into account any existing toxicity and (toxico-) kinetic data available for the test compound or related materials. The highest dose level should be chosen with the aim of inducing toxic effects but not death or severe suffering. Thereafter, a descending sequence of dose levels should be selected with a view to demonstrating any dosage related response and NOEL at the lowest dose level. Two to four fold intervals are frequently optimal for setting the descending dose levels and addition of a fourth test group is often preferable to using very large intervals (e.g., more than a factor of 10) between dosages.

(3) *Limit test.* If a test at one dose level of at least 1000 mg/kg body weight/day or, for dietary or drinking water administration, an equivalent percentage in the diet, or drinking water (based upon body weight determinations), using the procedures described for this study, produces no observable toxic effects and if toxicity would not be expected based upon data from structurally related compounds, then a full study using three dose levels may not be considered necessary. The limit test applies except when human exposure indicates the need for a higher dose level to be used.

(4) *Administration of doses.* (i) The animals are dosed with the test substance daily 7 days each week for a period of 28 days; use of a 5–day per week dosing regime or a 14–day exposure period needs to be justified. When the test substance is administered by gavage, this should be done in a single dose to the animals using a stomach tube or a suitable intubation cannula. The maximum volume of liquid that can be administered at one time depends on the size of the test animal. The volume should not exceed 1ml/100g body weight, except in the case of aqueous solutions where 2ml/100g body weight may be used. Except for irritating or corrosive substances which will normally reveal exacerbated effects with higher concentrations, variability in test volume should be minimized by adjusting the concentration to ensure a constant volume at all dose levels.

(ii) For substances administered via the diet or drinking water it is important to ensure that the quantities of the test substance involved do not interfere with normal nutrition or water balance. When the test substance is administered in the diet either a constant dietary concentration (parts per million (ppm)) or a constant dose level in terms of the animals' body weight may be used; the alternative used must be specified. For a substance administered by gavage, the dose should be given at similar times each day, and adjusted as necessary to maintain a constant dose level in terms of animal body weight. Where a repeated dose study is used as a preliminary to a long term study, a similar diet should be used in both studies.

(5) *Observations.* (i) The observation period should be 28 days, unless the study duration is 14 days (see paragraph (b)(1) of this section). Animals in a satellite group scheduled for follow-up observations should be kept for at least a further 14 days without treatment to detect delayed occurrence, or persistence of, or recovery from toxic effects.

(ii) General clinical observations should be made at least once a day,

preferably at the same time(s) each day and considering the peak period of anticipated effects after dosing. The health condition of the animals should be recorded. At least twice daily, all animals are observed for morbidity and mortality.

(iii) Once before the first exposure (to allow for within-subject comparisons), and at least once a week thereafter, detailed clinical observations should be made in all animals. These observations should be made outside the home cage in a standard arena and preferably at the same time, each time. They should be carefully recorded, preferably using scoring systems, explicitly defined by the testing laboratory. Effort should be made to ensure that variations in the test conditions are minimal and that observations are preferably conducted by observers unaware of the treatment. Signs noted should include, but not be limited to, changes in skin, fur, eyes, mucous membranes, occurrence of secretions and excretions and autonomic activity (e.g., lacrimation, piloerection, pupil size, unusual respiratory pattern). Changes in gait, posture and response to handling as well as the presence of clonic or tonic movements, stereotypies (e.g., excessive grooming, repetitive circling) or bizarre behaviour (e.g., self-mutilation, walking backwards) should also be recorded.

(iv) In the fourth exposure week sensory reactivity to stimuli of different types (see paragraph (h)(2) of this section) (e.g., auditory, visual and proprioceptive stimuli), assessment of grip strength and motor activity assessment should be conducted. Further details of the procedures that could be followed are given in the respective references. However, alternative procedures than those referenced could also be used. Examples of procedures for observation are described in the references in paragraphs (h)(1), (h)(2), (h)(3), (h)(4), and (h)(5) of this section.

(v) Functional observations conducted in the fourth exposure week may be omitted when the study is conducted as a preliminary study to a subsequent subchronic (90–day) study. In that case, the functional observations should be included in this follow-up study. On the other hand, the availability of data on functional observations from the repeated dose study may enhance the ability to select dose levels for a subsequent subchronic study.

(vi) Exceptionally, functional observations may also be omitted for groups that otherwise reveal signs of toxicity to an extent that would significantly interfere with the functional test performance.

(6) *Body weight and food/water consumption*. All animals should be weighed at least once a week. Measurements of food consumption should be made at least weekly. If the test substance is administered via the drinking water, water consumption should also be measured at least weekly.

(7) *Hematology*. (i) The following hematological examinations should be made at the end of the test period: hematocrit, hemoglobin concentration, erythrocyte count, total and differential leukocyte count, platelet count and a measure of blood clotting time/potential.

(ii) Blood samples should be taken from a named site just prior to or as part of the procedure for sacrificing the animals, and stored under appropriate conditions.

(8) *Clinical Biochemistry*. (i) Clinical biochemistry determinations to investigate major toxic effects in tissues and, specifically, effects on kidney and liver, should be performed on blood samples obtained of all animals just prior to or as part of the procedure for sacrificing the animals (apart from those found moribund and/or intercurrently sacrificed). Overnight fasting of the animals prior to blood sampling is recommended.[1] Investigations of plasma or serum shall include sodium, potassium, glucose, total cholesterol,

[1] For a number of measurements in serum and plasma, most notably for glucose, overnight fasting would be preferable. The major reason for this preference is that the increased variability which would inevitably result from non-fasting, would tend to mask more subtle effects and make interpretation difficult. On the other hand, however, overnight fasting may interfere with the general metabolism of the animals and, particularly in feeding studies, may disturb the daily exposure to the test substance. If overnight fasting is adopted, clinical biochemical determinations should be performed after the

Continued

urea, creatinine, total protein and albumin, at least two enzymes indicative of hepatocellular effects (such as alanine aminotransferase, aspartate aminotransferase, alkaline phosphatase, gamma glutamyl transpeptidase, and sorbitol dehydrogenase). Measurements of additional enzymes (of hepatic or other origin) and bile acids may provide useful information under certain circumstances.

(ii) Optionally, the following urinalysis determinations could be performed during the last week of the study using timed urine volume collection; appearance, volume, osmolality or specific gravity, pH, protein, glucose and blood and blood cells.

(iii) In addition, studies to investigate serum markers of general tissue damage should be considered. Other determinations that should be carried out if the known properties of the test substance may, or are suspected to, affect related metabolic profiles include calcium, phosphate, fasting triglycerides, specific hormones, methemoglobin and cholinesterase. These must to be identified for chemicals in certain classes or on a case-by-case basis.

(iv) Overall, there is a need for a flexible approach, depending on the species and the observed and/or expected effect with a given compound.

(v) If historical baseline data are inadequate, consideration should be given to determination of hematological and clinical biochemistry variables before dosing commences.

(9) *Pathology*—(i)*Gross necropsy*. (A) All animals in the study must be subjected to a full, detailed gross necropsy which includes careful examination of the external surface of the body, all orifices, and the cranial, thoracic and abdominal cavities and their contents. The liver, kidneys, adrenals, testes, epididymides, thymus, spleen, brain and heart of all animals (apart from those found moribund and/or intercurrently sacrificed) should be trimmed of any adherent tissue, as appropriate, and their wet weight taken as soon as possible after dissection to avoid drying.

(B) The following tissues should be preserved in the most appropriate fixation medium for both the type of tissue and the intended subsequent histopathological examination: all gross lesions, brain (representative regions including cerebrum, cerebellum and pons), spinal cord, stomach, small and large intestines (including Peyer's patches), liver, kidneys, adrenals, spleen, heart, thymus, thyroid, trachea and lungs (preserved by inflation with fixative and then immersion), ovaries, uterus, testes, epididymides, accessory sex organs (e.g., prostate, seminal vesicles), urinary bladder, lymph nodes (preferably one lymph node covering the route of administration and another one distant from the route of administration to cover systemic effects), peripheral nerve (sciatic or tibial) preferably in close proximity to the muscle, and a section of bone marrow (or, alternatively, a fresh mounted bone marrow aspirate). The clinical and other findings may suggest the need to examine additional tissues. Also any organs considered likely to be target organs based on the known properties of the test substance should be preserved.

(ii) *Histopathology*. (A) Full histopathology should be carried out on the preserved organs and tissues of all animals in the control and high dose groups. These examinations should be extended to animals of all other dosage groups, if treatment-related changes are observed in the high dose group.

(B) All gross lesions must be examined.

(C) When a satellite group is used, histopathology should be performed on tissues and organs identified as showing effects in the treated groups.

(g) *Data and reporting*—(1) *Data*. (i) Individual data should be provided. Additionally, all data should be summarized in tabular form showing for each test group the number of animals at the start of the test, the number of animals found dead during the test or sacrificed for humane reasons and the time of any death or humane sacrifice, the number showing signs of toxicity, a

conduct of functional observations in week 4 of the study.

description of the signs of toxicity observed, including time of onset, duration, and severity of any toxic effects, the number of animals showing lesions, the type of lesions and the percentage of animals displaying each type of lesion.

(ii) When possible, numerical results should be evaluated by an appropriate and generally acceptable statistical method. The statistical methods should be selected during the design of the study.

(2) *Test report*. The test report must include the following information:

(i) Test substance:

(A) Physical nature, purity and physicochemical properties.

(B) Identification data.

(ii) Vehicle (if appropriate): Justification for choice of vehicle, if other than water.

(iii) Test animals:

(A) Species/strain used.

(B) Number, age and sex of animals.

(C) Source, housing conditions, diet, etc.

(D) Individual weights of animals at the start of the test.

(iv) Test conditions:

(A) Rationale for dose level selection.

(B) Details of test substance formulation/diet preparation, achieved concentration, stability and homogeneity of the preparation.

(C) Details of the administration of the test substance.

(D) Conversion from diet/drinking water test substance concentration (parts per million (ppm)) to the actual dose (mg/kg body weight/day), if applicable.

(E) Details of food and water quality.

(v) Results:

(A) Body weight/body weight changes.

(B) Food consumption, and water consumption, if applicable.

(C) Toxic response data by sex and dose level, including signs of toxicity.

(D) Nature, severity and duration of clinical observations (whether reversible or not).

(E) Sensory activity, grip strength and motor activity assessments.

(F) Hematological tests with relevant base-line values.

(G) Clinical biochemistry tests with relevant base-line values.

(H) Body weight at sacrificing and organ weight data.

(I) Necropsy findings.

(J) A detailed description of all histopathological findings.

(K) Absorption data if available.

(L) Statistical treatment of results, where appropriate.

(vi) Discussion of results.

(vii) Conclusions.

(h) *References*. For additional background information on this test guideline, the following references should be consulted. These references are available at the addresses in § 700.17(b)(1) and (2) of this chapter.

(1) Tupper, D.E., Wallace, R.B. (1980). Utility of the Neurologic Examination in Rats. *Acta Neurobiological Exposure*, 40:999–1003.

(2) Gad, S.C. (1982). A Neuromuscular Screen for Use in Industrial Toxicology. *Journal of Toxicology and Environmental Health*, 9:691–704.

(3) Moser, V.C., McDaniel, K.M., Phillips, P.M. (1991). Rat Strain and Stock Comparisons Using a Functional Observational Battery: Baseline Values and Effects of Amitraz. *Toxicology and Applied Pharmacology*, 108:267–283.

(4) Meyer O.A., Tilson H.A., Byrd W.C., Riley M.T. (1979). A Method forthe Routine Assessment of Fore- and Hindlimb Grip Strength of Rats and Mice. *Neurobehavioral Toxicology*, 1:233–236.

(5) Crofton K.M., Howard J.L., Moser V.C., Gill M.W., Reiter L.W., Tilson H.A., MacPhail R.C. (1991). Interlaboratory Comparison of Motor Activity Experiments: Implication for Neurotoxicological Assessments. *Neurotoxicology and Teratology*, 13:599–609.

[65 FR 78780, Dec. 15, 2000, as amended at 77 FR 46294, Aug. 3, 2012]

§ 799.9310 TSCA 90-day oral toxicity in rodents.

(a) *Scope*. This section is intended to meet the testing requirements under section 4 of the Toxic Substances Control Act (TSCA). In the assessment and evaluation of the toxic characteristics of a chemical, the determination of subchronic oral toxicity may be carried out after initial information on toxicity has been obtained by acute testing. The subchronic oral study has

been designed to permit the determination of the no-observed-effects level (NOEL) and toxic effects associated with continuous or repeated exposure to a test substance for a period of 90 days. This study is not capable of determining those effects that have a long latency period for development (e.g., carcinogenicity and life shortening). Extrapolation from the results of this study to humans is valid only to a limited degree. However, it can useful in providing information on health hazards likely to arise from repeated exposure by the oral route over a limited period of time, such as target organs, the possibilities of accumulation, and can be of use in selecting dose levels for chronic studies and for establishing safety criteria for human exposure.

(b) *Source*. The source material used in developing this TSCA test guideline is the Office of Prevention, Pesticides, and Toxic Substances (OPPTS) harmonized test guideline 870.3100 (August 1998, final guideline). This source is available at the address in paragraph (h) of this section.

(c) *Definitions*. The following definitions apply to this section.

Cumulative toxicity is the adverse effects of repeated doses occurring as a result of prolonged action on, or increased concentration of, the administered test substance or its metabolites in susceptible tissue.

Dose in a subchronic oral study is the amount of test substance administered daily via the oral route (gavage, drinking water or diet) for a period of 90 days. Dose is expressed as weight of the test substance (grams, milligrams) per unit body weight of test animal (milligram per kilogram) or as weight of the test substance in parts per million in food or drinking water per day.

No-observed-effects level (NOEL) is the maximum dose used in a study which produces no adverse effects. The NOEL is usually expressed in terms of the weight of a test substance given daily per unit weight of test animal (milligrams per kilogram per day).

Subchronic oral toxicity is the adverse effects occurring as a result of the repeated daily exposure of experimental animals to a chemical by the oral route for a part (approximately 10%) of the test animal's life span.

Target organ is any organ of a test animal showing evidence of an effect induced by a test substance.

(d) *Limit test*. If a test at one dose level of at least 1,000 mg/kg body weight (expected human exposure may indicate the need for a higher dose level), using the procedures described for this study, produces no observable toxic effects or if toxic effects would not be expected based upon data of structurally related compounds, then a full study using three dose levels might not be necessary.

(e) *Test procedures*—(1) *Animal selection*—(i) *Species and strain*. A variety of rodent species may be used, although the rat is the preferred species. Commonly used laboratory strains must be employed.

(ii) *Age/weight*. (A) Testing should be started with young healthy animals as soon as possible after weaning and acclimatization.

(B) Dosing of rodents should generally begin no later than 8–9 weeks of age.

(C) At the commencement of the study the weight variation of animals used must be within 20% of the mean weight for each sex.

(iii) *Sex*. Equal numbers of animals of each sex must be used at each dose level, and the females shall be nulliparous and nonpregnant.

(iv) *Numbers*. (A) At least 20 rodents (10 males and 10 females) at each dose level.

(B) If interim sacrifices are planned, the number must be increased by the number of animals scheduled to be sacrificed before the completion of the study.

(C) To avoid bias, the use of adequate randomization procedures for the proper allocation of animals to test and control groups is required.

(D) Each animal must be assigned a unique identification number. Dead animals, their preserved organs and tissues, and microscopic slides must be identified by reference to the animal's unique number.

(v) *Husbandry*. (A) Animals may be group-caged by sex, but the number of animals per cage must not interfere with clear observation of each animal.

The biological properties of the test substance or toxic effects (e.g., morbidity, excitability) may indicate a need for individual caging.

(B) The temperature of the experimental animal rooms should be at 22 ±3 °C.

(C) The relative humidity of the experimental animal rooms should be 50 ±20%.

(D) Where lighting is artificial, the sequence should be 12 hours light/12 hours dark.

(E) Control and test animals must be fed from the same batch and lot. The feed should be analyzed to assure adequacy of nutritional requirements of the species tested and for impurities that might influence the outcome of the test. For feeding, conventional laboratory diets may be used with an unlimited supply of drinking water.

(F) The study should not be initiated until animals have been allowed a period of acclimatization/quarantine to environmental conditions, nor should animals from outside sources be placed on test without an adequate period of quarantine. An acclimation period of at least five days is recommended.

(2) *Control and test substances.* (i) Where necessary, the test substance is dissolved or suspended in a suitable vehicle. If a vehicle or diluent is needed, the vehicle should not elicit toxic effects or substantially alter the chemical or toxicological properties of the test substance. It is recommended that wherever possible the usage of an aqueous solution be considered first, followed by consideration of a solution in oil and then solution in other vehicles.

(ii) If possible, one lot of the test substance tested should be used throughout the duration of the study and the research sample should be stored under conditions that maintain its purity and stability. Prior to the initiation of the study, there should be a characterization of the test substance, including the purity of the test compound and, if technically feasible, the names and quantities of contaminants and impurities.

(iii) If the test or control substance is to be incorporated into feed or another vehicle, the period during which the test substance is stable in such a mixture should be determined prior to the initiation of the study. Its homogeneity and concentration should be determined prior to the initiation of the study and periodically during the study. Statistically randomized samples of the mixture should be analyzed to ensure that proper mixing, formulation, and storage procedures are being followed, and that the appropriate concentration of the test or control substance is contained in the mixture.

(3) *Control groups.* A concurrent control group is required. This group must be an untreated or sham-treated control group or, if a vehicle is used in administering the test substance, a vehicle control group. If the toxic properties of the vehicle are not known or cannot be made available, both untreated and vehicle control groups are required.

(4) *Satellite group.* A satellite group of 20 animals (10 animals per sex) may be treated with the high dose level for 90 days and observed for reversibility, persistence, or delayed occurrence of toxic effects for a post-treatment period of appropriate length, normally not less than 28 days. In addition, a control group of 20 animals (10 animals of each sex) should be added to the satellite study.

(5) *Dose levels and dose selection.* (i) In subchronic toxicity tests, it is desirable to determine a dose-response relationship as well as a NOEL. Therefore, at least three dose levels plus a control and, where appropriate, a vehicle control (corresponding to the concentration of vehicle at the highest dose level) must be used. Doses should be spaced appropriately to produce test groups with a range of toxic effects. The data should be sufficient to produce a dose-response curve.

(ii) The highest dose level should result in toxic effects but not produce an incidence of fatalities which would prevent a meaningful evaluation.

(iii) The intermediate dose levels should be spaced to produce a gradation of toxic effects.

(iv) The lowest dose level should produce no evidence of toxicity.

(6) *Administration of the test substance.* (i) If the test substance is administered by gavage, the animals are dosed with the test substance on a 7–day per week basis for a period of at least 90 days.

However, based primarily on practical considerations, dosing by gavage on a 5–day per week basis is acceptable. If the test substance is administered in the drinking water, or mixed in the diet, then exposure should be on a 7–day per week basis.

(ii) All animals must be dosed by the same method during the entire experimental period.

(iii) For substances of low toxicity, it is important to ensure that when administered in the diet the quantities of the test substance involved do not interfere with normal nutrition. When the test substance is administered in the diet, either a constant dietary concentration (parts per million) or a constant dose level in terms of body weight should be used; the alternative used should be specified.

(iv) For a substance administered by gavage, the dose should be given at approximately the same time each day, and adjusted at intervals (weekly or biweekly) to maintain a constant dose level in terms of body weight.

(7) *Observation period.* (i) The animals must be observed for a period of 90 days.

(ii) Animals in the satellite group (if used) scheduled for follow-up observations should be kept for at least 28 days further without treatment to detect recovery from, or persistence of, toxic effects.

(8) *Observation of animals.* (i) Observations must be made at least twice each day for morbidity and mortality. Appropriate actions should be taken to minimize loss of animals to the study (e.g., necropsy or refrigeration of those animals found dead and isolation or sacrifice of weak or moribund animals). General clinical observations should be made at least once a day, preferably at the same time each day, taking into consideration the peak period of anticipated effects after dosing. The clinical condition of the animal should be recorded.

(ii) A careful clinical examination must be made at least once weekly. Observations should be detailed and carefully recorded, preferably using explicity defined scales. Observations should include, but not be limited to, evaluation of skin and fur, eyes and mucous membranes, respiratory and circulatory effects, autonomic effects such as salivation, central nervous system effects, including tremors and convulsions, changes in the level of activity, gait and posture, reactivity to handling or sensory stimuli, altered strength, and stereotypes or bizarre behavior (e.g., self-mutilation, walking backwards).

(iii) Signs of toxicity should be recorded as they are observed including the time of onset, degree and duration.

(iv) Measurements of food consumption and water consumption, if drinking water is the exposure route, must be made weekly.

(v) Individual weights of animals must be determined shortly before the test substance is administered, weekly thereafter, and at death.

(vi) Moribund animals should be removed and sacrificed when noticed and the time of death should be recorded as precisely as possible.

(vii) At termination, all survivors in the treatment and control groups must be sacrificed.

(9) *Clinical pathology.* Hematology and clinical chemistry examinations must be made on all animals, including controls, of each sex in each group. The hematology and clinical chemistry parameters should be examined at terminal sacrifice at the end of the study. Overnight fasting of the animals prior to blood sampling is recommended. Overall, there is a need for a flexible approach in the measures examined, depending on the observed or expected effects from a chemical, and in the frequency of measures, depending on the duration of potential chemical exposures.

(i) *Hematology.* The recommended parameters are red blood cell count, hemoglobin concentration, hematocrit, mean corpuscular volume, mean corpuscular hemoglobin, and mean corpuscular hemoglobin concentration, white blood cell count, differential leukocyte count, platelet count, and a measure of clotting potential, such as prothrombin time or activated partial thromboplastin time.

(ii) *Clinical chemistry.* (A) Parameters which are considered appropriate to all studies are electrolyte balance, carbohydrate metabolism, and liver and kidney function. The selection of specific

tests will be influenced by observations on the mode of action of the substance and signs of clinical toxicity.

(B) The recommended clinical chemistry determinations are potassium, sodium, glucose, total cholesterol, urea nitrogen, creatinine, total protein and albumin. More than 2 hepatic enzymes, (such as alanine aminotransferase, aspartate aminotransferase, alkaline phosphatase, sorbitol dehydrogenase, or gamma glutamyl transpeptidase) should also be measured. Measurements of addtional enzymes (of hepatic or other origin) and bile acids, may also be useful.

(C) If a test chemical has an effect on the hematopoietic system, reticulocyte counts and bone marrow cytology may be indicated.

(D) Other determinations that should be carried out if the test chemical is known or suspected of affecting related measures include calcium, phosphorus, fasting triglycerides, hormones, methemoglobin, and cholinesterases.

(iii) Optionally, the following urinalysis determinations could be performed during the last week of the study using timed urine volume collection: appearance, volume, osmolality or specific gravity, pH, protein, glucose and blood/blood cells.

(10) *Ophthalmological examination.* Ophthalmological examinations using an ophthalmoscope or an equivalent device must be made on all animals prior to the administration of the test substance and on all high dose and control groups at termination. If changes in the eyes are detected, all animals in the other dose groups must be examined.

(11) *Gross necropsy.* (i) All animals must be subjected to a full gross necropsy which includes examination of the external surface of the body, all orifices, and the cranial, thoracic and abdominal cavities and their contents.

(ii) The liver, kidneys, adrenals, testes, epididymides, ovaries, uterus, thymus, spleen, brain, and heart must be trimmed and weighed wet, as soon as possible after dissection.

(iii) The following organs and tissues, or representative samples thereof, should be preserved in a suitable medium for possible future histopathological examination:

(A) Digestive system—salivary glands, esophagus, stomach, duodenum, jejunum, ileum, cecum, colon, rectum, liver, pancreas, gallbladder (when present).

(B) Nervous system—brain (including sections of medulla/pons, cerebellum and cerebrum), pituitary, peripheral nerve (sciatic or tibial, preferably in close proximity to the muscle), spinal cord (three levels: cervical, mid-thoracic and lumbar), eyes (retina, optic nerve).

(C) Glandular system—adrenals, parathyroid, thyroid.

(D) Respiratory system—trachea, lungs, pharynx, larynx, nose.

(E) Cardiovascular/hemopoietic system—aorta, heart, bone marrow (and/or fresh aspirate), lymph nodes (preferably one lymph node covering the route of administration and another one distant from the route of administration to cover systemic effects), spleen, thymus.

(F) Urogenital system—kidneys, urinary bladder, prostate, testes, epididymides, seminal vesicle(s), uterus, ovaries, female mammary gland.

(G) Others—all gross lesions and masses, skin.

(12) *Histopathology.* (i) The following histopathology must be performed:

(A) Full histopathology on the organs and tissues, listed in paragraph (e)(11)(iii) of this section, of all rodents in the control and high dose groups, and all rodents that died or were sacrificed during the study.

(B) All gross lesions in all animals.

(C) Target tissues in all animals.

(D) When a satellite group is used, histopathology should be performed on tissues and organs identified as showing effects in the treated groups.

(ii) If excessive early deaths or other problems occur in the high dose group compromising the significance of the data, the next dose level should be examined for complete histopathology.

(iii) An attempt should be made to correlate gross observations with microscopic findings.

(iv) Tissues and organs designated for microscopic examination should be fixed in 10% buffered formalin or a recognized suitable fixative as soon as necropsy is performed and no less than 48 hours prior to trimming.

(f) *Data and reporting*—(1) *Treatment of results.* (i) Data must be summarized in tabular form, showing for each test group the number of animals at the start of the test, the number of animals showing lesions, the types of lesions and the percentage of animals displaying each type of lesion.

(ii) When applicable, all observed results, qualitative and quantitative, should be evaluated by an appropriate and generally accepted statistical method. Any generally accepted statistical methods may be used; the statistical methods, including significance criteria, should be selected during the design of the study.

(2) *Evaluation of study results.* The findings of a subchronic oral toxicity study should be evaluated in conjunction with the findings of preceding studies and considered in terms of the toxic effects and the necropsy and histopathological findings. The evaluation must include the relationship between the dose of the test substance and the presence or absence, the incidence and severity, of abnormalities, including behavioral and clinical abnormalities, gross lesions, identified target organs, body weight changes, effects on mortality and any other general or specific toxic effects. A properly conducted subchronic test should provide a satisfactory estimation of a NOEL. It also can indicate the need for an additional longer-term study and provide information on the selection of dose levels.

(3) *Test report.* In addition to reporting requirements specified under EPA Good Laboratory Practice Standards at 40 CFR part 792, subpart J, the following specific information must be reported:

(i) Test substance characterization should include:

(A) Chemical identification.

(B) Lot or batch number.

(C) Physical properties.

(D) Purity/impurities.

(ii) Identification and composition of any vehicle used.

(iii) Test system should contain data on:

(A) Species and strain of animals used and rationale for selection if other than that recommended.

(B) Age including body weight data and sex.

(C) Test environment including cage conditions, ambient temperature, humidity, and light/dark periods.

(D) Identification of animal diet.

(E) Acclimation period.

(iv) Test procedure should include the following data:

(A) Method of randomization used.

(B) Full description of experimental design and procedure.

(C) Dose regimen including levels, methods, and volume.

(v) Test results should include:

(A) Group animal data. Tabulation of toxic response data by species, strain, sex and exposure level for:

(*1*) Number of animals exposed.

(*2*) Number of animals showing signs of toxicity.

(*3*) Number of animals dying.

(B) Individual animal data. Data should be presented as summary (group mean) as well as for individual animals.

(*1*) Date of death during the study or whether animals survived to termination.

(*2*) Date of observation of each abnormal sign and its subsequent course.

(*3*) Body weight data.

(*4*) Feed and water (if collected) consumption data.

(5) Achieved dose (mg/kg/day) as a time-weighted average if the test substance is administered in the diet or drinking water.

(*6*) Results of ophthalmological examination.

(*7*) Results of hematological tests performed.

(*8*) Results of clinical chemistry tests performed.

(*9*) Results of urinalysis, if performed.

(*10*) Necropsy findings, including absolute and relative (to body weight) organ weight data.

(*11*) Detailed description of all histopathological findings.

(*12*) Statistical treatment of results, where appropriate.

(g) *Quality control.* A system must be developed and maintained to assure and document adequate performance of laboratory equipment. The study must be conducted in compliance with 40

CFR Part 792—Good Laboratory Practice Standards.

(h) *References*. For additional background information on this test guideline, the following references should be consulted. These references are available at the addresses in § 700.17(b)(1) and (2) of this chapter.

(1) Boyd, E.M. Chapter 14. Pilot Studies, 15. Uniposal Clinical Parameters, 16. Uniposal Autopsy Parameters. Predictive Toxicometrics. Williams and Wilkins, Baltimore (1972).

(2) Fitzhugh, O.G. *Subacute Toxicity, Appraisal of the Safety of Chemicals in Foods, Drugs and Cosmetics*. The Association of Food and Drug Officials of the United States (1959, 3rd Printing 1975) pp. 26–35.

(3) Organization for Economic Cooperation and Development. OECD uidelines for Testing of Chemicals. Guideline 408: Subchronic Oral Toxicity-Rodent: 90-day Study, Adopted: May 12, 1981.

(4) Weingand K., Brown G., Hall R. et al. Harmonization of Animal Clinical Pathology Testing in Toxicity and Safety Studies. *Fundam. & Appl. Toxicol*. 29:198-201. (1996)

[65 FR 78783, Dec. 15, 2000, as amended at 77 FR 46294, Aug. 3, 2012]

§ 799.9325 TSCA 90-day dermal toxicity.

(a) *Scope*. This section is intended to meet the testing requirements under section 4 of the Toxic Substances Control Act (TSCA). In the assessment and evaluation of the toxic characteristics of a chemical, the determination of subchronic dermal toxicity may be carried out after initial information on toxicity has been obtained by acute testing. The subchronic dermal study has been designed to permit the determination of the no-observed-effects level (NOEL) and toxic effects associated with continuous or repeated exposure to a test substance for a period of 90 days. This study is not capable of determining those effects that have a long latency period for development (e.g., carcinogenicity and life shortening). Extrapolation from the results of this study to humans is valid only to a limited degree. It can, however, provide useful information on the degree of percutaneous absorption, target organs, the possibilities of accumulation, and can be of use in selecting dose levels for chronic studies and for establishing safety criteria for human exposure.

(b) *Source*. The source material used in developing this TSCA test guideline is the Office of Prevention, Pesticides, and Toxic Substances (OPPTS) harmonized test guideline 870.3250 (August 1998, final guideline). This source is available at the address in paragraph (h) of this section.

(c) *Definitions*. The following definitions also apply to this section.

Cumulative toxicity is the adverse effect of repeated doses occurring as a result of prolonged action or increased concentration of the administered test substance or its metabolites in susceptible tissues.

Dose in a subchronic dermal study is the amount of test substance applied daily to the skin for 90 days. Dose is expressed as weight of the test substance (grams, milligrams), per unit body weight of test animal (milligrams per kilogram), or as weight of the test substance per unit of surface area (milligrams per square centimeter) per day.

No-observed-effects level (NOEL) is the maximum dose used in a study which produces no adverse effects. The NOEL is expressed in terms of the weight of a test substance given daily per unit weight of test animal (milligrams per kilogram per day).

Subchronic dermal toxicity is the adverse effects occurring as a result of the repeated daily exposure of experimental animals to a chemical by the dermal route for a part of the test animal's life span.

Target organ is any organ of a test animal showing evidence of an effect induced by a test substance.

(d) *Limit test*. If a test at one dose level of at least 1,000 mg/kg body weight (expected human exposure may indicate the need for a higher dose level), using the procedures described for this section, produces no observable toxic effects or if toxic effects would not be expected based upon data on structurally related compounds, a full study using three dose levels might not be necessary.

(e) *Test procedures*—(1) *Animal selection*—(i) *Species and strain*. A mammalian species must be used for testing. The rat, rabbit, or guinea pig may be used. Commonly used laboratory strains must be employed. If other mammalian species are used, the tester must provide justification/reasoning for their selection. When a subchronic dermal study is conducted as a preliminary to a chronic dermal study, the same species and strain must be used in both studies.

(ii) *Age/weight*. (A) Testing should be started with young healthy animals as soon as possible after weaning and acclimatization.

(B) Dosing should generally begin in guinea pigs between 5–6 weeks of age, in rats between 8–9 weeks of age, and in rabbits at least 12 weeks old.

(C) At the commencement of the study, the weight variation of animals used must be within 20% of the mean weight for each sex.

(iii) *Sex*. Equal numbers of animals of each sex with healthy skin must be used at each dose level. The females shall be nulliparous and nonpregnant except for specially designed studies.

(iv) *Numbers*. (A) At least 20 animals (10 animals per sex) must be used at each dose level.

(B) If interim sacrifices are planned, the number must be increased by the number of animals scheduled to be sacrificed before completion of the study.

(C) To avoid bias, the use of adequate randomization procedures for the proper allocation of animals to test and control groups is required.

(D) Each animal must be assigned a unique identification number. Dead animals, their preserved organs and tissues, and microscopic slides must be identified by reference to the animal's unique number.

(v) *Husbandry*. (A) Animals should be housed in individual cages.

(B) The temperature of the experimental animal rooms should be at 22 ±3 °C

(C) The relative humidity of the experimental animal rooms should be 50 ±20%.

(D) Where lighting is artificial, the sequence should be 12 hours light/12 hours dark.

(E) Control and test animals must be fed from the same batch and lot. The feed should be analyzed to assure adequacy of nutritional requirements of the species tested and for impurities that might influence the outcome of the test. For feeding, conventional laboratory diets may be used with an unlimited supply of drinking water.

(F) The study should not be initiated until animals have been allowed a period of acclimatization/quarantine to environmental conditions, nor should animals from outside sources be placed on test without an adequate period of quarantine. An acclimation period of at least five days is recommended.

(2) *Control and test substances*. (i) Where necessary, the test substance is dissolved or suspended in a suitable vehicle. If a vehicle or diluent is needed, the vehicle should not elicit toxic effects or substantially alter the chemical or toxicological properties of the test substance. It is recommended that, whenever possible, the usage of an aqueous solution be considered first, followed by consideration of a solution of oil and then solution of other vehicles.

(ii) One lot of the test substance should be used, if possible, throughout the duration of the study, and the research sample should be stored under conditions that maintain its purity and stability. Prior to the initiation of the study, there should be a characterization of the test substance, including the purity of the test compound and if technically feasible, the name and quantities of unknown contaminants and impurities.

(iii) If the test substance is dissolved or suspended in a vehicle, the period during which the test substance is stable in such a mixture should be determined prior to the initiation of the study. Its homogeneity and concentration should be determined prior to the initiation of the study and periodically during the study. Statistically randomized samples of the mixture should be analyzed to ensure that proper mixing, formulation, and storage procedures are being followed, and that the appropriate concentration of the test or control substance is contained in the mixture.

(3) *Control groups.* A concurrent control group is required. This group must be an untreated or sham-treated control group or, if a vehicle is used in the application of the test substance, a vehicle control group. If the toxic properties of the vehicle are not known or not available, both untreated/sham-treated and vehicle control groups are required.

(4) *Satellite group.* A satellite group of 20 animals (10 animals per sex) may be treated with the high dose level for 90 days and observed for reversibility, persistence, or delayed occurrence of toxic effects for a post-treatment period of appropriate length, normally not less than 28 days. In addition a control group of 20 animals (10 animals per sex) should be added to the satellite study.

(5) *Dose levels and dose selection.* (i) In subchronic toxicity tests, it is desirable to determine a dose-response relationship as well as a NOEL. Therefore, at least three dose levels plus a control and, where appropriate, a vehicle control (corresponding to the concentration of vehicle at the highest dose level) group shall be used. Doses should be spaced appropriately to produce test groups with a range of toxic effects. The data should be sufficient to produce a dose-response curve.

(ii) The highest dose level should elicit signs of toxicity but not produce severe skin irritation or an incidence of fatality which would prevent a meaningful evaluation. If application of the test substance produces severe skin irritation, the concentration may be reduced, although this may result in a reduction in, or absence of, other toxic effects at the high dose level. If the skin has been badly damaged early in the study, it may be necessary to terminate the study and undertake a new one at lower concentrations.

(iii) The intermediate dose levels should be spaced to produce a gradation of toxic effects.

(iv) The lowest dose level should not produce any evidence of toxic effects.

(6) *Preparation of animal skin.* Shortly before testing, fur must be clipped from not less than 10% of the body surface area for application of the test substance. In order to dose approximately 10% of the body surface, the area starting at the scapulae (shoulders) to the wing of the ileum (hipbone) and half way down the flank on each side of the animal should be shaved. Shaving should be carried out approximately 24 hours before dosing. Repeated clipping or shaving is usually needed at approximately weekly intervals. When clipping or shaving the fur, care should be taken to avoid abrading the skin which could alter its permeability.

(7) *Preparation of test substance.* (i) Liquid test substances are generally used undiluted, except as indicated in paragraph (e)(5)(ii) of this section.

(ii) Solids should be pulverized when possible. The substance should be moistened sufficiently with water or, when necessary, a suitable vehicle to ensure good contact with the skin. When a vehicle is used, the influence of the vehicle on toxicity of, and penetration of the skin by, the test substance should be taken into account.

(iii) The volume of application should be kept constant, e.g., less than 300 μL for the rat; different concentrations of test solution shall be prepared for different dose levels.

(8) *Administration of test substance.* (i) The duration of exposure should be at least for 90 days.

(ii) Ideally, the animals should be treated with test substance for at least 6 hours per day on a 7-day per week basis. However, based on practical considerations, application on a 5-day per week basis is acceptable. Dosing should be conducted at approximately the same time each day.

(iii) The test substance must be applied uniformly over the treatment site.

(iv) The surface area covered may be less for highly toxic substances. As much of the area should be covered with as thin and uniform a film as possible.

(v) During the exposure period, the test substance must be held in contact with the skin with a porous gauze dressing (less than or equal to 8 ply). The test site must be further covered with nonirritating tape to retain the gauze dressing and the test substance and to ensure that the animals cannot ingest the test substance. Restrainers may be used to prevent the ingestion of

the test substance, but complete immobilization is not recommended. The test substance may be wiped from the skin after the six-hour exposure period to prevent ingestion.

(9) *Observation of animals.* (i) Observations must be made at least twice each day for morbidity and mortality. Appropriate actions should be taken to minimize loss of animals to the study (e.g., necropsy or refrigeration of those animals found dead and isolation or sacrifice of weak or moribund animals). General clinical observations must be made at least once a day, preferably at the same time each day, taking into consideration the peak period of anticipated effects after dosing. The clinical condition of the animal should be recorded.

(ii) A careful clinical examination must be made at least once weekly. Observations should be detailed and carefully recorded, preferably using explicity defined scales. Observations should include, but not be limited to, evaluation of skin and fur, eyes and mucous membranes, respiratory and circulatory effects, autonomic effects such as salivation, central nervous system effects, including tremors and convulsions, changes in the level of activity, gait and posture, reactivity to handling or sensory stimuli, altered strength, and stereotypes or bizarre behavior (e.g., self-mutilation, walking backwards).

(iii) Signs of toxicity should be recorded as they are observed including the time of onset, degree and duration.

(iv) Individual weights of animals must be determined shortly before the test substance is administered, weekly thereafter, and at death.

(v) Food consumption must also be determined weekly if abnormal body weight changes are observed.

(vi) Moribund animals should be removed and sacrificed when noticed and the time of death should be recorded as precisely as possible.

(vii) At termination, all survivors in the control and treatment groups must be sacrificed.

(10) *Clinical pathology.* Hematology and clinical chemistry examinations must be made on all animals, including controls, of each sex in each group. The hematology and clinical chemistry parameters should be examined at terminal sacrifice at the end of the study. Overnight fasting of the animals prior to blood sampling is recommended. Overall, there is a need for a flexible approach in the measures examined, depending on the observed or expected effects from a chemical, and in the frequency of measures, depending on the duration of potential chemical exposures.

(i) *Hematology.* The recommended parameters are red blood cell count, hemoglobin concentration, hematocrit, mean corpuscular volume, mean corpuscular hemoglobin, and mean corpuscular hemoglobin concentration, white blood cell count, differential leukocyte count, platelet count, and a measure of clotting potential, such as prothrombin time or activated partial thromboplastin time.

(ii) *Clinical chemistry.* (A) Parameters which are considered appropriate to all studies are electrolyte balance, carbohydrate metabolism, and liver and kidney function. The selection of specific tests will be influenced by observations on the mode of action of the substance and signs of clinical toxicity.

(B) The recommended clinical chemistry determinations are potassium, sodium, glucose, total cholesterol, urea nitrogen, creatinine, total protein and albumin. More than 2 hepatic enzymes, (such as alanine aminotransferase, aspartate aminotransferase, alkaline phosphatase, sorbitol dehydrogenase, or gamma glutamyl transpeptidase) should also be measured. Measurements of additional enzymes (of hepatic or other origin) and bile acids, may also be useful.

(C) If a test chemical has an effect on the hematopoietic system, reticulocyte counts and bone marrow cytology may be indicated.

(D) Other determinations that should be carried out if the test chemical is known or suspected of affecting related measures include calcium, phosphorus, fasting triglycerides, hormones, methemoglobin, and cholinesterases.

(iii) Optionally, the following urinalysis determinations could be performed during the last week of the study using timed urine volume collection: appearance, volume, osmolality or specific

gravity, pH, protein, glucose and blood/blood cells.

(11) *Ophthalmological examination.* Using an ophthalmoscope or an equivalent device, ophthalmological examinations must be made on all animals prior to the administration of the test substance and on all high dose and control groups at termination. If changes in the eyes are detected, all animals in the other dose groups must be examined.

(12) *Gross necropsy.* (i) All animals must be subjected to a full gross necropsy which includes examination of the external surface of the body, all orifices, and the cranial, thoracic and abdominal cavities and their contents.

(ii) The liver, brain, kidneys, spleen, adrenals, testes, epididymides, uterus, ovaries, thymus and heart must be trimmed and weighed wet, as soon as possible after dissection.

(iii) The following organs and tissues, or representative samples thereof, must be preserved in a suitable medium for possible future histopathological examination:

(A) Digestive system—salivary glands, esophagus, stomach, duodenum, jejunum, ileum, cecum, colon, rectum, liver, pancreas, gallbladder (when present).

(B) Nervous system—brain (multiple sections, including cerebrum, cerebellum and medulla/pons), pituitary, peripheral nerve (sciatic or tibial, preferably in close proximity to the muscle), spinal cord (three levels, cervical, mid-thoracic and lumbar), eyes (retina, optic nerve).

(C) Glandular system—adrenals, parathyroid, thyroid.

(D) Respiratory system—trachea, lungs, pharynx, larynx, nose.

(E) Cardiovascular/Hematopoietic system—aorta, heart, bone marrow (and/or fresh aspirate), lymph nodes (preferably one lymph node covering the route of administration and another one distant from the route of administration to cover systemic effects), spleen, thymus.

(F) Urogenital system—kidneys, urinary bladder, prostate, testes, epididymides, seminal vesicle(s), uterus, ovaries, female mammary gland.

(G) Other—all gross lesions and masses, skin (both treated and adjacent untreated areas).

(13) *Histopathology.* (i) The following histopathology must be performed:

(A) Full histopathology on the organs and tissues, listed in paragraph (e)(12)(iii) of this section, of all animals in the control and high dose groups and all animals that died or were sacrificed during the study.

(B) All gross lesions in all animals.

(C) Target organs in all animals.

(D) When a satellite group is used, histopathology must be performed on tissues and organs identified as showing toxic effects in the treated groups.

(ii) If excessive early deaths or other problems occur in the high dose group compromising the significance of the data, the next dose level must be examined for complete histopathology.

(iii) An attempt should be made to correlate gross observations with microscopic findings.

(iv) Tissues and organs designated for microscopic examination should be fixed in 10% buffered formalin or a recognized suitable fixative as soon as necropsy is performed and no less than 48 hours prior to trimming.

(f) *Data and reporting*—(1) *Treatment of results.* (i) Data must be summarized in tabular form, showing for each test group, number of animals at the start of the test, the number of animals showing lesions, the types of lesions and the percentage of animals displaying each type of lesion.

(ii) When applicable, all observed results, qualitative and quantitative, should be evaluated by an appropriate and generally acceptable statistical method. Any generally accepted statistical method should be used; the statistical methods including significance criteria should be selected during the design of the study.

(2) *Evaluation of study results.* The findings of a subchronic dermal toxicity study should be evaluated in conjunction with the findings of preceding studies and considered in terms of toxic effects and the necropsy and histopathological findings. The evaluation should include the relationship between the dose of the test substance,

the incidence and severity of abnormalities including behavioral and clinical abnormalities, gross lesions, identified target organs, body weight changes, effect on mortality, and any other general or specific toxic effects. A properly conducted 90-day subchronic dermal study should provide information on the effects of repeated application of a substance and a satisfactory estimation of a NOEL. It also can indicate the need for an additional longer-term study and provide information on the selection of dose levels.

(3) *Test report*. In addition to reporting requirements specified under EPA Good Laboratory Practice Standards at 40 CFR part 792, subpart J, the following specific information must be reported:

(i) Test substance characterization should include:

(A) Chemical identification.

(B) Lot or batch numbers.

(C) Physical properties.

(D) Purity/impurities.

(ii) Identification and composition of any vehicle if used.

(iii) Test system should contain data on:

(A) Species and strain of animals used and rationale for selection if other than that recommended.

(B) Age including body weight data and sex.

(C) Test environment including cage conditions, ambient temperature, humidity, and light/dark periods.

(D) Identification of animal diet.

(E) Acclimation period.

(iv) Test procedure should include the following data:

(A) Method of randomization used.

(B) Full description of experimental design and procedure.

(C) Dose regime including levels, method, and volume.

(v) Test results should include:

(A) Group animal data. Tabulation of toxic response data by species, strain, sex and exposure level for:

(*1*) Number of animals exposed.

(*2*) Number of animals showing signs of toxicity.

(*3*) Number of animals dying.

(B) Individual animal data. Data should be presented as summary (group mean) as well as for individual animals.

(*1*) Date of death during the study or whether animals survived to termination.

(*2*) Date of observation of each abnormal sign and its subsequent course.

(*3*) Body weight data.

(*4*) Feed consumption data, when collected.

(*5*) Results of ophthalmological examination.

(*6*) Results of hematological tests performed.

(*7*) Results of clinical chemistry tests performed.

(*8*) Results of urinalysis, when performed.

(*9*) Results of observations made.

(*10*) Necropsy findings, including absolute and relative (to body weight) organ weight data.

(*11*) Detailed description of all histopathological findings.

(*12*) Statistical treatment of results, where appropriate.

(g) *Quality control*. A system must be developed and maintained to assure and document adequate performance of laboratory equipment. The study must be conducted in compliance with the Good Laboratory Practice (GLP) regulations.

(h) *References*. For additional background information on this test guideline, the following references should be consulted. These references are available at the addresses in § 700.17(b)(1) and (2) of this chapter.

(1) Organization for Economic Cooperation and Development. Guidelines for Testing of Chemicals, Section 4-Health Effects, Part 411 Subchronic Toxicity Studies, Paris, 1981.

(2) Weingand K, Brown G, Hall R et al. (1996). Harmonization of Animal Clinical Pathology Testing in Toxicity and Safety Studies. *Fundam. & Appl. Toxicol*. 29:198-201.

[65 FR 78786, Dec. 15, 2000, as amended at 77 FR 46294, Aug. 3, 2012]

§ 799.9346 TSCA 90-day inhalation toxicity.

(a) *Scope*. This section is intended to meet the testing requirements under section 4 of TSCA. In the assessment

and evaluation of the toxic characteristics of a gas, volatile substance, or aerosol/particulate, determination of subchronic inhalation toxicity may be carried out after initial information on toxicity has been obtained by acute testing. The subchronic inhalation study has been designed to permit the determination of the no-observed-effect-level (NOEL) and toxic effects associated with continuous or repeated exposure to a test substance for a period of 90 days. This study is not capable of determining those effects that have a long latency period for development (e.g., carcinogenicity and life shortening). Extrapolation from the results of this study to humans is valid only to a limited degree. It can, however, provide useful information on health hazards likely to arise from repeated exposures by the inhalation route over a limited period of time. It will provide information on target organs and the possibilities of accumulation, and can be of use in selecting concentration levels for chronic studies and establishing safety criteria for human exposure. Hazards of inhaled substances are influenced by the inherent toxicity and by physical factors such as volatility and particle size.

(b) *Source*. The source material used in developing this TSCA test guideline is the OPPTS harmonized test guideline 870.3465 (June 1996 Public Draft). This source is available at the address in paragraph (h) of this section.

(c) *Definitions*. The following definitions apply to this section.

Aerodynamic equivalent diameter is defined as the diameter of a unit density sphere having the same terminal settling velocity as the particle in question, whatever its size, shape, and density. It is used to predict where in the respiratory tract such particles may be deposited.

Concentration in a subchronic inhalation study is the amount of test substance administered via inhalation for a period of 90-days. Concentration is expressed as weight of the test substance per unit volume of air (milligrams per liter or parts per million).

Cumulative toxicity is the adverse effects of repeated exposures occurring as a result of prolonged action on, or increased concentration of the administered test substance or its metabolites in susceptible tissues.

Inhalable diameter refers to that aerodynamic diameter of a particle which is considered to be inhalable for the organism. It is used to refer to particles which are capable of being inhaled and may be deposited anywhere within the respiratory tract

Mass median aerodynamic diameter (MMAD) is the median aerodynamic diameter and along with the geometric standard deviation (GSD) is used to describe the particle size distribution of any aerosol statistically based on the weight and size of the particles. Fifty percent of the particles by weight will be smaller than the median diameter and 50% of the particles will be larger.

No-observed-effect-level (NOEL) is the maximum concentration used in a study which produces no adverse effects.

Subchronic inhalation toxicity is the adverse effects occurring as a result of the repeated daily exposure of experimental animals to a chemical by inhalation for part (approximately 10%) of a life span.

(d) *Limit test*. If exposure at a concentration of 1 mg/L (expected human exposure may indicate the need for a higher concentration), or where this is not possible due to physical or chemical properties of the test substance, the maximum attainable concentration produces no observable toxic effects, then a full study using three concentrations might not be necessary.

(e) *Test procedures*—(1) *Animal selection*—(i) *Species and strain*. A mammalian species shall be used for testing. A variety of rodent species may be used, although the rat is the preferred species. Commonly used laboratory strains should be employed. If another mammalian species is used, the tester shall provide justification/reasoning for its selection.

(ii) *Age/weight*. Testing should be started with young healthy animals as soon as possible after weaning and acclimatization.

(B) Dosing of rodents should generally begin no later than 8 weeks of age.

(C) At the commencement of the study the weight variation of animals

used shall not exceed ±20% of the mean weight for each sex.

(iii) *Sex*. (A) Equal numbers of animals of each sex shall be used at each concentration.

(B) Females shall be nulliparous and nonpregnant.

(iv) *Numbers*. (A) At least 20 animals (10 females and 10 males) should be used for each test group.

(B) If interim sacrifices are planned, the number of animals shall be increased by the number of animals scheduled to be sacrificed before the completion of the study.

(C) To avoid bias, the use of adequate randomization procedures for the proper allocation of animals to test and control groups is required.

(D) Each animal shall be assigned a unique identification number. Dead animals, their preserved organs and tissues, and microscopic slides shall be identified by reference to the animal's unique number.

(v) *Husbandry*. (A) Animals may be group-caged by sex, but the number of animals per cage must not interfere with clear observation of each animal. The biological properties of the test substance or toxic effects (e.g., morbidity, excitability) may indicate a need for individual caging. Animals must be housed individually in inhalation chambers during exposure to aerosols.

(B) The temperature of the experimental animal rooms should be at 22 ±3 °C.

(C) The relative humidity of the experimental animal rooms should be 30–70%.

(D) Where lighting is artificial, the sequence should be 12 h light/12 h dark.

(E) Control and test animals should be fed from the same batch and lot. The feed should be analyzed to assure adequacy of nutritional requirements of the species tested and for impurities that might influence the outcome of the rest. For feeding, conventional laboratory diets may be used with an unlimited supply of drinking water.

(F) The study should not be initiated until animals have been allowed a period of acclimatization/quarantine to environmental conditions, nor should animals from outside sources be placed on test without an adequate period of quarantine. An acclimatization period of at least 5 days is recommended.

(2) *Control and test substances*. (i) Whenever it is necessary to formulate the test substance with a vehicle for aerosol generation, the vehicle ideally should not elicit toxic effects or substantially alter the chemical or toxicological properties of the test substance.

(ii) One lot of the test substance should be used, if possible throughout the duration of the study, and the research sample should be stored under conditions that maintain its purity and stability. Prior to the initiation of the study, there should be a characterization of the test substance, including the purity of the test substance and, if technically feasible, the name and quantities of unknown contaminants and impurities.

(3) *Control groups*. A concurrent control group is required. This group shall be an untreated or sham-treated control group. Except for treatment with the test substance, animals in the control group shall be handled in a manner identical to the test group animals. Where a vehicle other than water is used to generate a substance, a vehicle control group should be used. If the toxic properties of the vehicle are not known or cannot be made available, both untreated and vehicle control groups are required.

(4) *Satellite group*. A satellite group of 20 animals (10 animals per sex) may be treated with the high concentration level for 90 days and observed for reversibility, persistence, or delayed occurrence of toxic effects for a post-treatment period of appropriate length, normally not less than 28 days. In addition, a control group of 20 animals (10 animals of each sex) should be added to the satellite study.

(5) *Concentration levels and concentration selection*. (i) In subchronic toxicity tests, it is desirable to have a concentration-response relationship as well as a NOEL. Therefore, at least three concentration levels plus a control and, where appropriate, a vehicle control (corresponding to the concentration of vehicle at the highest exposure level) shall be used. Concentrations should be spaced appropriately to produce test groups with a range of

toxic effects. The data should be sufficient to produce a concentration-response curve.

(ii) The highest concentration should result in toxic effects but not produce an incidence of fatalities which would prevent a meaningful evaluation.

(iii) The intermediate concentrations should be spaced to produce a gradation of toxic effects.

(iv) The lowest concentration should produce no evidence of toxicity.

(v) In the case of potentially explosive test substances, care should be taken to avoid generating explosive concentrations.

(6) *Administration of the test substance.* Animals should be exposed to the test substance for 6 h per day on a 7-day per week basis for a period of at least 90 days. Based primarily on practical considerations, exposure for 6 h per day on a 5–day per week basis is acceptable.

(7) *Observation period.* The animals should be observed for a period of 90 days. Animals in the satellite group (if used) scheduled for follow-up observations should be kept for at least 28 days further without treatment to assess reversibility.

(8) *Exposure specifications.* (i) The animals shall be tested in dynamic inhalation equipment designed to sustain a minimum airflow of 10 air changes per hr, an adequate oxygen content of at least 19%, and uniform conditions throughout the exposure chamber. Maintenance of slight negative pressure inside the chamber will prevent leakage of the test substance into the surrounding areas. It is not normally necessary to measure chamber oxygen concentration if airflow is adequate.

(ii) The selection of a dynamic inhalation chamber should be appropriate for the test substance and test system. Where a whole body chamber is used to expose animals to an aerosol, individual housing must be used to minimize crowding of the test animals and maximize their exposure to the test substance. To ensure stability of a chamber atmosphere, the total volume occupied by the test animals shall not exceed 5% of the volume of the test chamber. It is recommended, but not required, that nose-only or head-only exposure be used for aerosol studies in order to minimize oral exposures due to animals licking compound off their fur. Heat stress should be minimized.

(iii) The temperature at which the test is performed should be maintained at 22 ±2 °C. The relative humidity should be maintained between 40 and 60%, but in certain instances (e.g., use of water vehicle) this may not be practicable.

(9) *Physical measurements.* Measurements or monitoring shall be made of the following:

(i) The rate of airflow shall be monitored continuously but recorded at least three times during the exposure.

(ii) The actual concentrations of the test substance shall be measured in the animal's breathing zone. During the exposure period, the actual concentrations of the test substance shall be held as constant as practicable and monitored continuously or intermittently depending on the method of analysis. Chamber concentration may be measured using gravimetric or analytical methods as appropriate. If trial run measurements are reasonably consistent ±10% for liquid, aerosol, gas, or vapor; ±20% for dry aerosol), then two measurements should be sufficient. If measurements are not consistent, three to four measurements should be taken. Whenever the test substance is a formulation, or it is necessary to formulate the test substance with a vehicle for aerosol generation, the analytical concentration must be reported for the total formulation, and not just for the active ingredient (AI). If, for example, a formulation contains 10% AI and 90% inerts, a chamber analytical limit concentration of 2 mg/L would consist of 0.2 mg/L of the AI. It is not necessary to analyze inert ingredients provided the mixture at the animal's breathing zone is analogous to the formulation; the grounds for this conclusion must be provided in the study report. If there is some difficulty in measuring chamber analytical concentration due to precipitation, nonhomogeneous mixtures, volatile components, or other factors, additional analyses of inert components may be necessary.

(iii) During the development of the generating system, particle size analysis shall be performed to establish the stability of aerosol concentrations

with respect to particle size. The MMAD particle size range should be between 1–3 μm. The particle size of hygroscopic materials should be small enough when dry to assure that the size of the swollen particle will still be within the 1–3 μm range. Measurements of aerodynamic particle size in the animal's breathing zone should be measured during a trial run. If MMAD valves for each exposure level are within 10% of each other, then two measurements during the exposures should be sufficient. If pretest measurements are not within 10% of each other, three to four measurements should be taken.

(iv) Temperature and humidity shall be monitored continuously and recorded at least three times during an exposure.

(10) *Feed and water during exposure period.* Feed shall be withheld during exposure. Water may also be withheld during exposure.

(11) *Observation of animals.* (i) During and following exposure, observations are made and recorded systematically; individual records should be maintained for each animal. It is not always possible to observe animals during exposure in a whole-body chamber.

(ii) Observations shall be made at least once each day for morbidity and mortality. Appropriate actions should be taken to minimize loss of animals to the study (e.g., Necropsy or refrigeration of those animals found dead and isolation or sacrifice of weak or moribund animals).

(iii) A careful clinical examination shall be made at least once weekly. Observations should be detailed and carefully recorded, preferably using explicitly defined scales. Observations should include, but not be limited to, evaluation of skin and fur, eyes and mucous membranes, respiratory and circulatory effects, autonomic effects such as salivation, central nervous system effects, including tremors and convulsions, changes in the level of activity, gait and posture, reactivity to handling or sensory stimuli, altered strength, and stereotypes or bizarre behavior (e.g., self-mutilation, walking backwards).

(iv) Signs of toxicity should be recorded as they are observed including the time of onset, degree and duration.

(v) Individual weights of animals shall be determined shortly before the test substance is administered, and weekly thereafter.

(vi) Food consumption shall also be determined weekly if abnormal body weight changes are observed.

(vii) Moribund animals should be removed and sacrificed when noticed and the time of death should be recorded as precisely as possible.

(viii) At termination, all survivors in the treatment groups shall be sacrificed.

(12) *Clinical pathology.* Hematology and clinical chemistry examinations shall be made on all animals, including controls, of each sex in each group. The hematology and clinical chemistry parameters should be examined at terminal sacrifice at the end of the study. Overnight fasting of the animals prior to blood sampling is recommended. Overall, there is a need for a flexible approach in the measures examined, depending on the observed or expected effects from a chemical, and in the frequency of measures, depending on the duration of potential chemical exposures.

(i) Hematology. The recommended parameters are red blood cell count, hemoglobin concentration, hematocrit, mean corpuscular volume, mean corpuscular hemoglobin, and mean corpuscular hemoglobin concentration, white blood cell count, differential leukocyte count, platelet count, and a measure of clotting potential, such as prothrombin time or activated partial thromboplastin time.

(ii) Clinical chemistry. (A) Parameters which are considered appropriate to all studies are electrolyte balance, carbohydrate metabolism, and liver and kidney function. The selection of specific tests will be influenced by observations on the mode of action of the substance and signs of clinical toxicity.

(B) The recommended clinical chemistry determinations are potassium, sodium, glucose, total cholesterol, urea nitrogen, creatinine, total protein and albumin. More than 2 hepatic enzymes, (such as alanine aminotransferase, aspartate aminotransferase, alkaline phosphatase, sorbitol dehydrogenase, or gamma glutamyl transpeptidase)

should also be measured. Measurements of addtional enzymes (of hepatic or other origin) and bile acids, may also be useful.

(C) If a test chemical has an effect on the hematopoietic system, reticulocyte counts and bone marrow cytology may be indicated.

(D) Other determinations that should be carried out if the test chemical is known or suspected of affecting related measures include calcium, phosphorus, fasting triglycerides, hormones, methemoglobin, and cholinesterases.

(iii) Optionally, the following urinalysis determinations could be performed during the last week of the study using timed urine volume collection: appearance, volume, osmolality or specific gravity, pH, protein, glucose, and blood/blood cells.

(13) *Ophthalmological examination.* Ophthalmological examinations shall be made on all animals prior to the administration of the test substance and on all high concentration and control groups at termination. If changes in the eyes are detected, all animals in the other concentration groups shall be examined.

(14) *Gross pathology.* (i) All animals shall be subjected to a full gross necropsy which includes examination of the external surface of the body, all orifices and the cranial, thoracic, and abdominal cavities and their contents.

(ii) At least the liver, kidneys, brain, and gonads shall be trimmed and weighed wet, as soon as possible after dissection to avoid drying.

(iii) The following organs and tissues, or representative samples thereof, shall be preserved in a suitable medium for possible future histopathological examination:

(A) Digestive system.
(*1*) Salivary glands.
(*2*) Esophagus.
(*3*) Stomach.
(*4*) Duodenum.
(*5*) Jejunum.
(*6*) Ileum.
(*7*) Cecum.
(*8*) Colon.
(*9*) Rectum.
(*10*) Liver.
(*11*) Pancreas.
(*12*) Gallbladder (dogs).
(B) Nervous system.
(*1*) Brain (multiple sections).
(*2*) Pituitary.
(*3*) Peripheral nerve(s).
(*4*) Spinal cord (three levels).
(*5*) Eyes (retina, optic nerve).
(C) Glandular system.
(*1*) Adrenals.
(*2*) Parathyroids.
(*3*) Thyroids.
(D) Respiratory system.
(*1*) Trachea.
(*2*) Lung.
(*3*) Pharynx.
(*4*) Larynx.
(*5*) Nose.
(E) Cardiovascular/hematopoietic system.
(*1*) Aorta (thoracic).
(*2*) Heart.
(*3*) Bone marrow.
(*4*) Lymph nodes.
(*5*) Spleen.
(*6*) Thymus.
(F) Urogenital system.
(*1*) Kidneys.
(*2*) Urinary bladder.
(*3*) Prostate.
(*4*) Testes.
(*5*) Epididymides.
(*6*) Seminal vesicle(s).
(*7*) Uterus.
(*8*) Ovaries.
(G) Other.
(*1*) Lacrimal gland.
(*2*) Mammary gland.
(*3*) Skin.
(*4*) Skeletal muscle.
(*5*) All gross lesions and masses.
(*6*) Sternum and/or femur.

(15) *Histopathology.* (i) The following histopathology shall be performed:

(A) Full histopathology on the respiratory tract and other organs and tissues, listed under paragraph (e)(15)(iii) of this section, of all animals in the control and high exposure groups and all animals that died or were killed during the study.

(B) All gross lesions in all animals.

(C) Target organs in all animals.

(D) Lungs of all animals. Special attention to examination of the respiratory tract should be made for evidence of infection as this provides a convenient assessment of the state of health of the animals.

(E) When a satellite group is used, histopathology shall be performed on tissues and organs identified as showing effects in the treated groups.

(ii) If excessive early deaths or other problems occur in the high exposure group compromising the significance of the data, the next concentration should be examined for complete histopathology.

(iii) An attempt should be made to correlate gross observations with microscopic findings.

(iv) Tissues and organs designated for microscopic examination should be fixed in 10% buffered formalin or a recognized suitable fixative as soon as necropsy is performed and no less than 48 hrs prior to trimming. Tissues should be trimmed to a maximum thickness of 0.4 cm for processing.

(f) *Data and reporting*—(1) *Treatment of results*. (i) Data shall be summarized in tabular form, showing for each test group the number of animals at the start of the test, the number of animals showing lesions, the types of lesions, and the percentage of animals displaying each type of lesion.

(ii) All observed results (quantitative and qualitative) should be evaluated by an appropriate statistical method. Any generally accepted statistical method may be used; the statistical methods including significance criteria should be selected during the design of the study.

(2) *Evaluation of study results*. The findings of the subchronic inhalation toxicity study should be evaluated in conjunction with the findings of preceding studies and considered in terms of the observed toxic effects and the necropsy and histopathological findings. The evaluation will include the relationship between the concentration of the test substance and duration of exposure, and the presence or absence, the incidence and severity, of abnormalities, including behavioral and clinical abnormalities, gross lesions, identified target organs, body weight changes, effects on mortality and any other general or specific toxic effects. A properly conducted subchronic test should provide a satisfactory estimation of a no-effect level. It also can indicate the need for an additional longer-term study and provide information on the selection of concentrations.

(3) *Test report*. In addition to reporting requirements specified under 40 CFR part 792, subpart J, the following specific information shall be reported. Both individual and summary data should be presented.

(i) Test substance characterization shall include:

(A) Chemical identification.

(B) Lot or batch number.

(C) Physical properties.

(D) Purity/impurities.

(E) Identification and composition of any vehicle used.

(ii) Test system information shall include:

(A) Species and strain of animals used and rationale for selection if other than that recommended.

(B) Age, sex, and body weight.

(C) Test environment including cage conditions, ambient temperature, humidity, and light/dark periods.

(D) Identification of animal diet.

(E) Acclimation period.

(iii) Test procedure information shall include:

(A) Method of randomization used.

(B) Full description of experimental design and procedure.

(C) Exposure regimen including concentration levels, methods, and volume.

(D) Description of test conditions; the following exposure conditions shall be reported:

(*1*) Description of exposure apparatus including design, type, volume, source of air, system for generating aerosols, method of conditioning air, treatment of exhaust air and the method of housing the animals in a test chamber.

(*2*) The equipment for measuring temperature, humidity, and particulate aerosol concentrations and size should be described.

(E) Exposure data shall be tabulated and presented with mean values and a measure of variability (e.g., standard deviation) and include:

(*1*) Airflow rates through the inhalation equipment.

(*2*) Temperature and humidity of air.

(*3*) Actual (analytical or gravimetric) concentration in the breathing zone.

(*4*) Nominal concentration (total amount of test substance fed into the inhalation equipment divided by volume of air).

(*5*) Particle size distribution, calculated mass median aerodynamic diameter (MMAD) and geometric standard deviation (GSD).

(*6*) Explanation as to why the desired chamber concentration and/or particle size could not be achieved (if applicable) and the efforts taken to comply with this aspect of the section.

(iv) Test results information shall include:

(A) *Group animal data*. Tabulation of toxic response data by species, strain, sex and exposure level for:

(*1*) Number of animals exposed.

(*2*) Number of animals showing signs of toxicity.

(*3*) Number of animals dying.

(B) *Individual animal data*. Data should be presented as summary (group mean) as well as for individual animals.

(*1*) Time of death during the study or whether animals survived to termination.

(*2*) Time of observation of each abnormal sign and its subsequent course.

(*3*) Body weight data.

(*4*) Feed consumption data, when collected.

(*5*) Results of ophthalmological examination, when performed.

(*6*) Results of hematological tests performed. .

(*7*) Results of clinical chemistry tests performed.

(*8*) Results of urinalysis tests performed.

(*9*) Necropsy findings, including absolute and relative organ weight data.

(*10*) Detailed description of all histopathological findings.

(*11*) Statistical treatment of results, where appropriate.

(g) *Quality control*. A system shall be developed and maintained to assure and document adequate performance of laboratory staff and equipment. The study shall be conducted in compliance with 40 CFR part 792—Good Laboratory Practice Standards.

(h) *References*. For additional background information on this test guideline, the following references should be consulted. These references are available at the addresses in § 700.17(b)(1) and (2) of this chapter.

(1) Cage, J.C. Ed. Paget, G.E. *Experimental Inhalation Toxicology*, *Methods in Toxicology*. (F.A. Davis Co., Philadelphia, PA, 1970) pp. 258–277.

(2) Casarett, L.J. and Doull. Chapter 9. *Toxicology: The Basic Science of Poisons* (New York: Macmillan Publishing Co., Inc., 1975).

(3) U.S. Environmental Protection Agency, Office of Pesticide Programs, Health Effects Division. Interim policy for particle size and limit concentration issues in inhalation toxicity studies (February 1, 1994).

(4) MacFarland, H.N. Ed. Hayes, W.J. Vol. 7. *Respiratory Toxicology*, *Essays in Toxicology*. (Academic Press, New York, NY, 1976) pp. 121–154.

(5) Organisation for Economic Co-operation and Development. Guidelines for testing of chemicals, section 4-health effects, part 413. *Subchronic Inhalation Toxicity Studies* (Paris, 1981).

[62 FR 43824, Aug. 15, 1997, as amended at 64 FR 35077, June 30, 1999; 77 FR 46294, Aug. 3, 2012]

§ 799.9355 TSCA reproduction/developmental toxicity screening test.

(a) *Scope*—(1) *Applicability*. This section is intended to meet testing requirements of the Toxic Substances Control Act (TSCA) (15 U.S.C. 2601).

(2) *Source*. The source material used in developing this TSCA test guideline is the Office of Prevention, Pesticides, and Toxic Substances (OPPTS) harmonized test guideline 870.3550 (July 2000, final guidelines). This source is available at the address in paragraph (h) of this section.

(b) *Purpose*. (1) This guideline is designed to generate limited information concerning the effects of a test substance on male and female reproductive performance such as gonadal function, mating behavior, conception, development of the conceptus, and parturition. It is not an alternative to, nor does it replace, the existing comprehensive test standards in §§ 799.9370 and 799.9380.

(2) This screening test guideline can be used to provide initial information on possible effects on reproduction and/or development, either at an early stage of assessing the toxicological properties of chemicals, or on chemicals of high concern. It can also be used as part of a set of initial screening tests for existing chemicals for which

little or no toxicological information is available, as a dose range finding study for more extensive reproduction/developmental studies, or when otherwise considered relevant.

(3) This test does not provide complete information on all aspects of reproduction and development. In particular, it offers only limited means of detecting postnatal manifestations of prenatal exposure, or effects that may be induced during postnatal exposure. Due (amongst other reasons) to the relatively small numbers of animals in the dose groups, the selectivity of the end points, and the short duration of the study, this method will not provide evidence for definite claims of no effects.

(c) *Definitions.* The definitions in section 3 of TSCA and in 40 CFR Part 792—Good Laboratory Practice Standards apply to this section. The following definitions also apply to this section.

Dosage is a general term comprising of dose, its frequency and the duration of dosing.

Dose is the amount of test substance administered. Dose is expressed as weight (g, mg) as weight of test substance per unit weight of test animal (e.g., mg/kg), or as constant dietary concentration parts per million (ppm).

No-observed-effects level (NOEL) is the maximum dose used in a study which produces no adverse effects. The NOEL is expressed in terms of the weight of a test substance given daily per unit weight of test animal (milligrams per kilograms per day).

(d) *Principle of the test.* (1) The test substance is administered in graduated doses to several groups of males and females. Males should be dosed for a minimum of four weeks and up to and including the day before scheduled sacrifice (this includes a minimum of two weeks prior to mating, during the mating period and, approximately, two weeks post-mating). In view of the limited pre-mating dosing period in males, fertility may not be a particular sensitive indicator of testicular toxicity. Therefore, a detailed histological examination of the testes is essential. The combination of a pre-mating dosing period of two weeks and subsequent mating/fertility observations with an overall dosing period of at least four weeks, followed by detailed histopathology of the male gonads, is considered sufficient to enable detection of the majority of effects on male fertility and spermatogenesis.

(2) Females should be dosed throughout the study. This includes two weeks prior to mating (with the objective of covering at least two complete oestrous cycles), the variable time to conception, the duration of pregnancy and at least four days after delivery, up to and including the day before scheduled sacrifice.

(3) Duration of study, following acclimatization, is dependent on the female performance and is approximately 54 days, (at least 14 days premating, (up to) 14 days mating, 22 days gestation, 4 days lactation).

(4) During the period of administration, the animals are observed closely each day for signs of toxicity. Animals which die or are sacrificed during the test period are necropsied and, at the conclusion of the test, surviving animals are sacrificed and necropsied.

(e) *Description of the method*—(1) *Selection of animal species.* This test standard is designed for use with the rat. If other species are used, appropriate modifications will be necessary. Strains with low fecundity or well-known high incidence of developmental defects should not be used. Healthy virgin animals, not subjected to previous experimental procedures, should be used. The test animals should be characterized as to species, strain, sex, weight and/or age. At the commencement of the study the weight variation of animals used should be minimal and not exceed 20% of the mean weight of each sex.

(2) *Housing and feeding conditions.* (i) The temperature in the experimental animal room should be 22 °C (±3°). Although the relative humidity should be at least 30% and preferably not exceed 70% other than during room cleaning, the aim should be 50–60%. Lighting should be artificial, the sequence being 12 hours light, 12 hours dark. For feeding, conventional laboratory diets may be used with an unlimited supply of drinking water. The choice of diet may be influenced by the need to ensure a suitable admixture of a test substance when administered by this method.

(ii) Animals may be housed individually or be caged in small groups of the same sex; for group caging, no more than five animals should be housed per cage. Mating procedures should be carried out in cages suitable for the purpose. Pregnant females should be caged individually and provided with nesting materials.

(3) *Preparation of the animals.* Healthy young adult animals must be randomly assigned to the control and treatment groups. Cages should be arranged in such a way that possible effects due to cage placement are minimized. The animals must be uniquely identified and kept in their cages for at least five days prior to the start of the study to allow for acclimatization to the laboratory conditions.

(4) *Preparation of doses.* (i) It is recommended that the test substance be administered orally unless other routes of administration are considered more appropriate. When the oral route is selected, the test compound is usually administered by gavage; however, alternatively, test compounds may be administered via the diet or drinking water.

(ii) Where necessary, the test substance is dissolved or suspended in a suitable vehicle. It is recommended that, wherever possible, the use of an aqueous solution/suspension be considered first, followed by consideration of a solution/emulsion in oil (e.g., corn oil) and then by possible solution in other vehicles. For vehicles other than water the toxic characteristics of the vehicle must be known. The stability of the test substance in the vehicle should be determined.

(f) *Procedure*—(1) *Number and sex of animals.* It is recommended that each group be started with at least 10 animals of each sex. Except in the case of marked toxic effects, it is expected that this will provide at least 8 pregnant females per group which normally is the minimum acceptable number of pregnant females per group. The objective is to produce enough pregnancies and offspring to assure a meaningful evaluation of the potential of the substance to affect fertility, pregnancy, maternal and suckling behaviour, and growth and development of the F_1 offspring from conception to day 4 postpartum.

(2) *Dosage.* (i) Generally, at least three test groups and a control group should be used. Dose levels may be based on information from acute toxicity tests or on results from repeated dose studies. Except for treatment with the test substance, animals in the control group should be handled in an identical manner to the test group subjects. If a vehicle is used in administering the test substance, the control group should receive the vehicle in the highest volume used.

(ii) Dose levels should be selected taking into account any existing toxicity and (toxico-) kinetic data available for the test compound or related materials. The highest dose level should be chosen with the aim of inducing toxic effects but not death or severe suffering. Thereafter, a descending sequence of dose levels should be selected in order to demonstrate any dose response relationships and no adverse effects at the lowest dose level. Two to four fold intervals are frequently optimal for setting the descending dose levels and addition of a fourth test group is often preferable to using very large intervals (e.g., more than a factor of 10) between dosages.

(3) *Limit test.* If an oral study at one dose level of at least 1000 mg/kg body weight/day or, for dietary or drinking water administration, an equivalent percentage in the diet, or drinking water using the procedures described for this study, produces no observable toxic effects and if toxicity would not be expected based upon data from structurally related compounds, then a full study using several dose levels may not be considered necessary. The limit test applies except when human exposure indicates the need for a higher oral dose level to be used. For other types of administration, such as inhalation or dermal application, the physical chemical properties of the test substance often may dictate the maximum attainable concentration.

(4) *Administration of doses.* (i) The animals must be dosed with the test substance daily for seven days a week. When the test substance is administered by gavage, this should be done in a single dose to the animals using a

stomach tube or a suitable intubation cannula. The maximum volume of liquid that can be administered at one time depends on the size of the test animal. The volume should not exceed 1 ml/100 g body weight, except in the case of aqueous solutions where 2 ml/100 g body weight may be used. Except for irritating substances which will normally reveal exacerbated effects with higher concentrations, variability in test volume should be minimized by adjusting the concentration to ensure a constant volume at all dose levels.

(ii) For substances administered via the diet or drinking water, it is important to ensure that the quantities of the test substance involved do not interfere with normal nutrition or water balance. When the test substance is administered in the diet either a constant dietary concentration (parts per million (ppm)) or a constant dose level in terms of the animals' body weight may be used; the alternative used must be specified. For a substance administered by gavage, the dose should be given at similar times each day, and adjusted at least weekly to maintain a constant dose level in terms of animal body weight.

(5) *Experimental schedule.* (i) Dosing of both sexes should begin at least 2 weeks prior to mating, after they have been acclimatized for at least five days. The study should be scheduled in such a way that mating begins soon after the animals have attained full sexual maturity. This may vary slightly for different strains of rats in different laboratories, e.g., Sprague Dawley rats 10 weeks of age, Wistar rats about 12 weeks of age. Dams with offspring should be sacrificed on day 4 post-partum, or shortly thereafter. The day of birth (viz. when parturition is complete) is defined as day 0 post-partum. Females showing no-evidence of copulation are sacrificed 24–26 days after the last day of the mating period. Dosing is continued in both sexes during the mating period. Males should further be dosed after the mating period at least until the minimum total dosing period of 28 days has been completed. They are then sacrificed, or, alternatively, are retained and continued to be dosed for the possible conduction of a second mating if considered appropriate.

(ii) Daily dosing of the parental females should continue throughout pregnancy and at least up to, and including, day 3 post-partum or the day before sacrifice. For studies where the test substance is administered by inhalation or by the dermal route, dosing should be continued at least up to, and including, day 19 of gestation.

(iii) The experimental schedule is given in the following figure 1.

FIGURE 1

DIAGRAM OF THE EXPERIMENTAL SCHEDULE INDICATING THE MAXIMUM STUDY DURATION, BASED ON A FULL 14-DAY MATING PERIOD

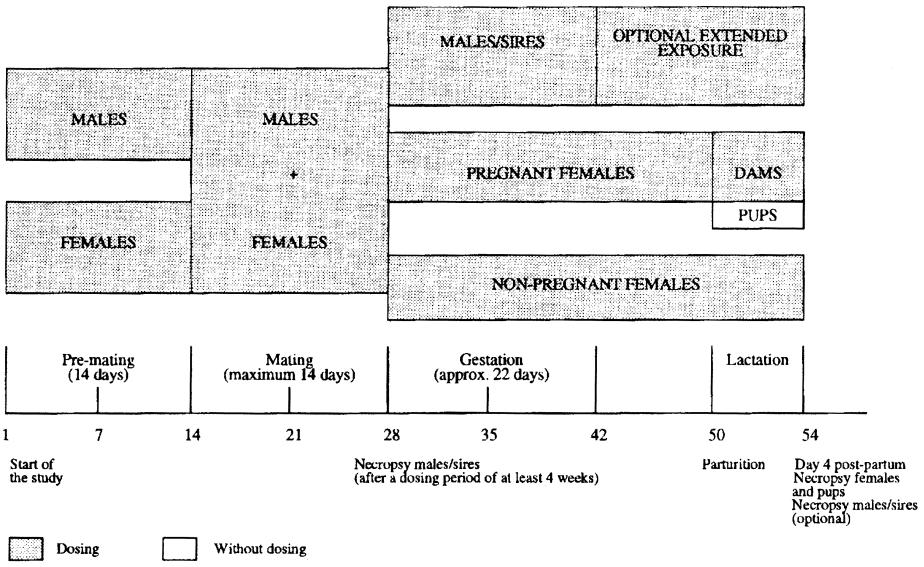

(6) *Mating procedure.* Normally, 1:1 (one male to one female) matings should be used in this study. Exceptions can arise in the case of occasional deaths of males. The female should be placed with the same male until pregnancy occurs or two weeks have elapsed. Each morning the females should be examined for the presence of sperm or a vaginal plug. Day 0 of pregnancy is defined as the day a vaginal plug or sperm is found.

(7) *Observations.* (i) Throughout the test period, general clinical observations should be made at least once a day, and more frequently when signs of toxicity are observed. They should be made preferably at the same time(s) each day, considering the peak period of anticipated effects after dosing. Pertinent behavioural changes, signs of difficult or prolonged parturition and all signs of toxicity, including mortality, should be recorded. These records should include time of onset, degree and duration of toxicity signs.

(ii) The duration of gestation should be recorded and is calculated from day 0 of pregnancy. Each litter should be examined as soon as possible after delivery to establish the number and sex of pups, stillbirths, live births, runts (pups that are significantly smaller than corresponding control pups) and the presence of gross abnormalities.

(iii) Live pups should be counted and sexed and litters weighed within 24 hours of parturition (day 1) and on day 4 post-partum. In addition to the observations on parent animals, described by paragraph (f)(7) of this section, any abnormal behaviour of the offspring should be recorded.

(8) *Body weight and food/water consumption.* (i) Males and females should be individually weighed on the first day of dosing, at least weekly thereafter, and at termination. During pregnancy, females should be weighed on days 0, 7, 14 and 20 and within 24 hours of parturition (day 1) and day 4 post-partum.

(ii) During pre-mating, pregnancy and lactation, food consumption should be measured at least weekly. The measurement of food consumption during mating is optional. Water consumption during these periods should also be

measured when the test substance is administered via drinking water.

(9) *Pathology*—(i) *Gross necropsy*. (A) At the time of sacrifice or death during the study, the adult animals should be examined macroscopically for any abnormalities or pathological changes. Special attention should be paid to the organs of the reproductive system. The number of implantation sites should be recorded. Corpora lutea should be counted.

(B) The testes and epididymides of all male adult animals should be weighed.

(C) Dead pups and pups sacrificed at day 4 post-partum, or shortly thereafter, should, at least, be carefully examined externally for gross abnormalities.

(D) The ovaries, testes, epididymides, accessory sex organs and all organs showing macroscopic lesions of all adult animals should be preserved. Formalin fixation is not recommended for routine examination of testes and epididymides. An acceptable method is the use of Bouin's fixative for these tissues.

(ii) *Histopathology*. (A) Detailed histological examination should be performed on the ovaries, testes and epididymides of the animals of the highest dose group and the control group. The other preserved organs may be examined when necessary. Examinations should be extended to the animals of other dosage groups when changes are seen in the highest dose group.

(B) Detailed testicular histopathological examination (e.g., using Bouin's fixative, paraffin embedding and transverse sections of 4-5 ±m thickness) should be conducted with special emphasis on stages of spermatogenesis and histopathology interstitial testicular cell structure. The evaluation should identify treatment-related effects such as retained spermatids, missing germ cell layers or types, multinucleated giant cells or sloughing of spermatogenic cells into the lumen (the specifications for the evaluation are discussed in paragraph (g)(2) of this section). Examination of the intact epididymis should include the caput, corpus, and cauda, which can be accomplished by evaluation of a longitudinal section. The epididymis should be evaluated for leukocyte infiltration, change in prevalence of cell types, aberrant cell types, and phagocytosis of sperm. PAS and hematoxylin staining may be used for examination of the male reproductive organs. Histopathological examination of the ovary should detect qualitative depletion of the primordial follicle population.

(g) *Data and reporting*—(1) *Data*. Individual animal data should be provided. Additionally, all data should be summarised in tabular form, showing for each test group the number of animals at the start of the test, the number of animals found dead during the test or sacrificed for humane reasons, the time of any death or humane sacrifice, the number of fertile animals, the number of pregnant females, the number of animals showing signs of toxicity, a description of the signs of toxicity observed, including time of onset, duration, and severity of any toxic effects, the types of histopathological changes, and all relevant litter data.

(2) *Evaluation of results*. (i) The findings of this toxicity study should be evaluated in terms of the observed effects, necropsy and microscopic findings. This evaluation must include the relationship between the dose of the test substance and the presence or absence, incidence and severity of abnormalities, including gross lesions, identified target organs, infertility, clinical abnormalities, affected reproductive and litter performance, body weight changes, effects on mortality and any other toxic effects.

(ii) Because of the short period of treatment of the male, the histopathology of the testis and epididymus must be considered along with the fertility data, when assessing male reproductive effects.

(iii) Due to the limited dimensions of the study, statistical analysis in the form of tests for ''significance'' are of limited value for many endpoints, especially reproductive endpoints. If statistical analyses are used then the method chosen should be appropriate for the distribution of the variable examined, and be selected prior to the start of the study. Because of the small group size, the use of historic control data (e.g.,

for litter size), where available, may also be useful as an aid to the interpretation of the study.

(3) *Test report*. The test report must include the following information:

(i) Test substance:

(A) Physical nature and, where relevant, physicochemical properties.

(B) Identification data.

(ii) Vehicle (if appropriate): Justification for choice of vehicle if other than water.

(iii) Test animals:

(A) Species/strain used.

(B) Number, age and sex of animals.

(C) Source, housing conditions, diet, etc.

(D) Individual weights of animals at the start of the test.

(iv) Test conditions:

(A) Rationale for dose level selection.

(B) Details of test substance formulation/diet preparation, achieved concentrations, stability and homogeneity of the preparation.

(C) Details of the administration of the test substance.

(D) Conversion from diet/drinking water test substance concentration (parts per million (ppm)) to the actual dose (mg/kg body weight/day), if applicable.

(E) Details of food and water quality.

(v) Results (toxic response data by sex and dose):

(A) Time of death during the study or whether animals survived to termination.

(B) Nature, severity and duration of clinical observations (whether reversible or not).

(C) Body weight/body weight change data.

(D) Food consumption and water consumption, if applicable.

(E) Effects on reproduction, including information on mating/precoital interval, fertility, fecundity and gestation duration.

(F) Effects on offspring, including number of pups born (live and dead), sex ratio, postnatal growth (pup weights) and survival (litter size), gross abnormalities and clinical observations during lactation.

(G) Body weight at termination and organ weight data for the parental animals.

(H) Necropsy data, including number of implantations and number of corpora lutea.

(I) Calculations of pre- and postimplantation loss.

(J) Detailed description of histopathological findings.

(K) Statistical treatment of results, where appropriate.

(vi) Discussion of results.

(vii) Conclusions.

(4) *Interpretation of results*. The study will provide evaluations of reproduction/developmental toxicity associated with administration of repeated doses. It could provide an indication of the need to conduct further investigations and provides guidance in the design of subsequent studies.

(h) *References*. For additional background information on this test guideline, the following references should be consulted. These references are available at the addresses in § 700.17(b)(1) and (2) of this chapter.

(1) OECD (1995). Reproduction/Developmental Toxicity Screening Test, OECD 421, OECD Guidelines for Testing of Chemicals.

(2) [Reserved]

[65 FR 78789, Dec. 15, 2000, as amended at 77 FR 46294, Aug. 3, 2012]

§ 799.9365 TSCA combined repeated dose toxicity study with the reproduction/developmental toxicity screening test.

(a) *Scope*—(1) *Applicability*. This section is intended to meet testing requirements of the Toxic Substances Control Act (TSCA) (15 U.S.C. 2601).

(2) *Source*. The source material used in developing this TSCA test guideline is the Office of Prevention, Pesticides and Toxic Substances (OPPTS) harmonized test guideline 870.3650 (July 2000, final guidelines). This source is available at the address in paragraph (h) of this section.

(b) *Purpose*. (1) This screening test provides limited information on systemic toxicity, neurotoxicity, and/or immunotoxicity following repeated exposure over a limited time period. In addition, it can be used to provide initial information on possible effects on male and female reproductive performance such as gonadal function, mating behavior, conception, development of

the conceptus, and parturition. It is not an alternative to, nor does it replace, the existing test guidelines in §§ 799.9370, 799.9380, 799.9620, and 799.9780 of this part.

(2) This test does not provide complete information on all aspects of reproduction and development. In particular, it offers only limited means of detecting postnatal manifestations of prenatal exposure, or effects that may be induced during postnatal exposure. Due (amongst other reasons) to the selectivity of the end points, and the short duration of the study, this method will not provide evidence for definite claims of no reproduction/developmental effects.

(3) This test can be used to provide initial information either at an early stage of assessing the toxicological properties of chemicals, or chemicals of high concern. It can also be used as part of a set of initial screening tests for existing chemicals for which little or no toxicological information is available or when otherwise considered relevant. It also can serve as an alternative to conducting two separate screening tests for repeated dose toxicity as described in § 799.9305 of this part and reproductive/developmental toxicity as described in § 799.9355 of this part.

(c) *Definitions*. The definitions in section 3 of TSCA and in 40 CFR Part 792—Good Laboratory Practice Standards apply to this section. The following definitions also apply to this section.

Dosage is a general term comprising dose, its frequency and the duration of dosing.

Dose is the amount of test substance administered. Dose is expressed as weight (g, gm) or as weight of test substance per unit weight of test animal (e.g., mg/kg), or as constant dietary concentration (parts per million (ppm)).

No-observed-effects level (NOEL) is the maximum dose used in a study which produces no adverse effects. The NOEL is expressed in terms of the weight of a test substance given daily per unit weight of test animal (milligrams per kilogram per day).

(d) *Principle of the test*. (1) The test substance must be administered in graduated doses to several groups of males and females. Males should be dosed for a minimum of 4 weeks, up to and including the day before scheduled sacrifice (this includes a minimum of 2 weeks prior to mating, during the mating period and, approximately, 2 weeks post mating). In view of the limited pre-mating dosing period in males, fertility may not be a particularly sensitive indicator of testicular toxicity. Therefore, a detailed histological examination of the testes is essential. The combination of a pre-mating dosing period of 2 weeks and subsequent mating/fertility observations with an overall dosing period of at least 4 weeks, followed by detailed histopathology of the male gonads, is considered sufficient to enable detection of the majority of effects on male fertility and spermatogenesis.

(2) Females should be dosed throughout the study. This includes 2 weeks prior to mating (with the objective of covering at least two complete oestrous cycles), the variable time to conception, the duration of pregnancy and at least 4 days after delivery, up to and including the day before scheduled sacrifice.

(3) Duration of study, following acclimatization, is dependent on the female performance and is approximately 54 days, (at least 14 days pre-mating, (up to) 14 days mating, 22 days gestation, 4 days lactation).

(4) During the period of administration, the animals are observed closely each day for signs of toxicity. Animals which die or are sacrificed during the test are necropsied and, at the conclusion of the test, surviving animals are sacrificed and necropsied.

(e) *Description of the method*—(1) *Selection of animal species*. This test guideline is designed for use with the rat. If other species are used, appropriate modifications will be necessary. Strains with low fecundity or well-known high incidence of developmental defects should not be used. Healthy virgin animals, not subjected to previous experimental procedures, should be used. The test animals should be characterised as to species, strain, sex, weight and/or age. At the commencement of the study the weight variation of animals used should be minimal and not exceed ±20% of the mean weight of

each sex. Where the study is conducted as a preliminary study to a long-term or a full-generation study, preferably animals from the same strain and source should be used in both studies.

(2) *Housing and feeding conditions.* (i) The temperature in the experimental animal room should be 22 °C (±3°). The relative humidity should be at least 30% and preferably not exceed 70% other than during room cleaning. Lighting should be artificial, the sequence being 12 hours light, 12 hours dark. For feeding, conventional laboratory diets may be used with an unlimited supply of drinking water. The choice of diet may be influenced by the need to ensure a suitable admixture of a test substance when administered by this method.

(ii) Animals may be housed individually or be caged in small groups of the same sex; for group caging, no more than five animals should be housed per cage. Mating procedures should be carried out in cages suitable for the purpose. Pregnant females should be caged individually and provided with nesting materials.

(3) *Preparation of the animals.* Healthy young adult animals must be randomised and assigned to the treatment groups and cages. Cages should be arranged in such a way that possible effects due to cage placements are minimized. The animals must be uniquely identified and kept in their cages for at least 5 days prior to the start of the study to allow for acclimatisation to the laboratory conditions.

(4) *Preparation of doses.* (i) It is recommended that the test substance be administered orally unless other routes of administration are considered more appropriate. When the oral route is selected, the test compound is usually administered by gavage; however, alternatively, test compounds may also be administered via the diet or drinking water.

(ii) Where necessary, the test substance is dissolved or suspended in a suitable vehicle. It is recommended that, wherever possible, the use of an aqueous solution/suspension be considered first, followed by consideration of a solution/emulsion in oil (e.g., corn oil) and then by possible solution in other vehicles. For non-aqueous vehicles the toxic characteristics of the vehicle must be known. The stability of the test substance in the vehicle should be determined.

(f) *Procedure*—(1) *Number and sex of animals.* It is recommended that each group be started with at least 10 animals of each sex. Except in the case of marked toxic effects, it is expected that this will provide at least eight pregnant females per group which normally is the minimum acceptable number of pregnant females per group. The objective is to produce enough pregnancies and offspring to assure a meaningful evaluation of the potential of the substance to affect fertility, pregnancy, maternal and suckling behaviour, and growth and development of the F_1 offspring from conception to day 4 post-partum. If interim sacrifices are planned, the number should be increased by the number of animals scheduled to be sacrificed before the completion of the study. Consideration should be given to an additional satellite group of five animals per sex in the control and the top dose group for observation of reversibility, persistence or delayed occurrence of systemic toxic effects, for at least 14 days post treatment. Animals of the satellite groups must not be mated and, consequently, must not used for the assessment of reproduction/developmental toxicity.

(2) *Dosage.* (i) Generally, at least three test groups and a control group should be used. If there are no suitable general toxicity data available, a range finding study may be performed to aid the determination of the doses to be used. Except for treatment with the test substance, animals in the control group should be handled in an identical manner to the test group subjects. If a vehicle is used in administering the test substance, the control group should receive the vehicle in the highest volume used.

(ii) Dose levels should be selected taking into account any existing toxicity and (toxico-) kinetic data available for the test compound or related materials. It should also be taken into account that there may be differences in sensitivity between pregnant and non-pregnant animals. The highest

dose level should be chosen with the aim of inducing toxic effects but not death nor obvious suffering. Thereafter, a descending sequence of dose levels should be selected with a view to demonstrating any dosage related response and no adverse effects at the lowest dose level. Two- to four-fold intervals are frequently optimum and addition of a fourth test group is often preferable to using very large intervals (e.g., more than a factor of 10) between dosages.

(3) *Limit test.* If an oral study at 1-dose level of at least 1000 mg/kg body weight/day or, for dietary administration, an equivalent percentage in the diet, or drinking water (based upon body weight determinations), using the procedures described for this study, produces no observable toxic effects and if toxicity would not be expected based upon data from structurally related compounds, then a full study using several dose levels may not be considered necessary. The limit test applies except when human exposure indicates the need for a higher dose level to be used. For other types of administration, such as inhalation or dermal application, the physical chemical properties of the test substance often may dictate the maximum attainable exposure.

(4) *Administration of doses.* (i) The animals are dosed with the test substance daily for 7 days a week. When the test substance is administered by gavage, this should be done in a single dose to the animals using a stomach tube or a suitable intubation cannula. The maximum volume of liquid that can be administered at one time depends on the size of the test animal. The volume should not exceed 1 ml/100 g body weight, except in the case of aqueous solutions where 2 ml/100 g body weight may be used. Except for irritating or corrosive substances which will normally reveal exacerbated effects with higher concentrations, variability in test volume should be minimized by adjusting the concentration to ensure a constant volume at all dose levels.

(ii) For substances administered via the diet or drinking water, it is important to ensure that the quantities of the test substance involved do not interfere with normal nutrition or water balance. When the test substance is administered in the diet either a constant dietary concentration (parts per million (ppm)) or a constant dose level in terms of the animals' body weight may be used; the alternative used must be specified. For a substance administered by gavage, the dose should be given at similar times each day, and adjusted at least weekly to maintain a constant dose level in terms of animal body weight.

(5) *Experimental schedule.* (i) Dosing of both sexes should begin 2 weeks prior to mating, after they have been acclimatized for at least 5 days. The study should be scheduled in such a way that mating begins soon after the animals have attained full sexual maturity. This may vary slightly for different strains of rats in different laboratories, e.g., Sprague Dawley rats 10 weeks of age, Wistar rats about 12 weeks of age. Dams with offspring should be sacrificed on day 4 post-partum, or shortly thereafter. In order to allow for overnight fasting of dams prior to blood collection (if this option is preferred), dams and their offspring need not necessarily be sacrificed on the same day. The day of birth (viz. when parturition is complete) is defined as day 0 post-partum. Females showing no-evidence of copulation are sacrificed 24–26 days after the last day of the mating period. Dosing is continued in both sexes during the mating period. Males should further be dosed after the mating period at least until the minimum total dosing period of 28 days has been completed. They are then sacrificed, or, alternatively, are retained and continued to be dosed for the possible conduction of a second mating if considered appropriate.

(ii) Daily dosing of the parental females should continue throughout pregnancy and at least up to, and including, day 3 post-partum or the day before sacrifice. For studies where the test substance is administered by inhalation or by the dermal route, dosing should be continued at least up to, and including, day 19 of gestation.

(iii) Animals in a satellite group scheduled for follow-up observations, if included, must not mated. They should be kept at least for a further 14 days after the first scheduled sacrifice of

dams, without treatment to detect delayed occurrence, or persistence of, or recovery from toxic effects.

(iv) The experimental schedule is given in the following figure 1.

Figure 1

DIAGRAM OF THE EXPERIMENTAL SCHEDULE, INDICATING THE MAXIMUM STUDY DURATION, BASED ON A FULL 14-DAY MATING PERIOD

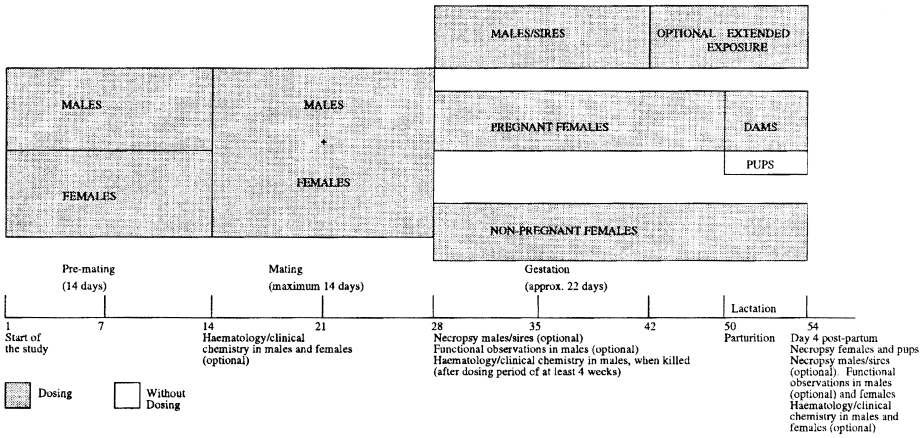

(6) *Mating procedure.* Normally, 1:1 (one male to one female) matings should be used in this study. Exceptions can arise in the case of occasional deaths of males. The female should be placed with the same male until pregnancy occurs or 2 weeks have elapsed. Each morning the females should be examined for the presence of sperm or a vaginal plug. Day 0 of pregnancy is defined as the day a vaginal plug or sperm is found. In case pairing was unsuccessful, re-mating of females with proven males of the same group could be considered.

(7) *Observations.* (i) General clinical observations should be made at least once a day, preferably at the same time(s) each day and considering the peak period of anticipated effects after dosing. The health condition of the animals should be recorded. At least twice daily all animals must be observed for morbidity and mortality.

(ii) Once before the first exposure (to allow for within-subject comparisons), and at least once a week thereafter, detailed clinical observations should be made in all animals. These observations should be made outside the home cage in a standard arena and preferably at the same time, each day. They should be carefully recorded; preferably using scoring systems, explicitly defined by the testing laboratory. Effort should be made to ensure that variations in the test conditions are minimal and that observations are preferably conducted by observers unaware of the treatment. Signs noted should include, but not be limited to, changes in skin, fur, eyes, mucous membranes, occurrence of secretions and excretions and autonomic activity (e.g., lacrimation, piloerection, pupil size, unusual respiratory pattern). Changes in gait, posture and response to handling as well as the presence of clonic or tonic movements, stereotypies (e.g., excessive grooming, repetitive circling), difficult or prolonged parturition or bizarre behaviour (e.g., self-mutilation, walking backwards) should also be recorded.

(iii) At one time during the study, sensory reactivity to stimuli of different modalities (e.g., auditory, visual and proprioceptive stimuli) assessment of grip strength and motor activity assessment should be conducted in five

males and five females, randomly selected from each group. Further details of the procedures that could be followed are given in the respective references. However, alternative procedures than those referenced could also be used. In males, these functional observations should be made towards the end of their dosing period, shortly before scheduled sacrifice but before blood sampling for hematology or clinical chemistry. Females should be in a physiologically similar state during these functional tests and should preferably be tested during lactation, shortly before scheduled sacrifice. In order to avoid hypothermia of pups, dams should be removed from the pups for not more than 30 to 40 minutes. Examples of procedures for observation are described in the references in paragraphs (h)(3), (h)(4), (h)(5), (h)(6), and (h)(7) of this section.

(iv) Functional observations made once towards the end of the study may be omitted when the study is conducted as a preliminary study to a subsequent subchronic (90-day) or long-term study. In that case, the functional observations should be included in this follow-up study. On the other hand, the availability of data on functional observations from this repeated dose study may enhance the ability to select dose levels for a subsequent subchronic or long-term study.

(v) Functional observations may also be omitted for groups that otherwise reveal signs of toxicity to an extent that would significantly interfere with the functional test performance.

(vi) The duration of gestation should be recorded and is calculated from day 0 of pregnancy. Each litter should be examined as soon as possible after delivery to establish the number and sex of pups, stillbirths, live births, runts (pups that are significantly smaller than corresponding control pups), and the presence of gross abnormalities.

(vii) Live pups should be counted and sexed and litters weighed within 24 hours of parturition (day 0 or 1 post-partum) and on day 4 post-partum. In addition to the observations on parental animals, described by paragraphs (f)(7)(ii) and (f)(7)(iii) of this section, any abnormal behaviour of the offspring should be recorded.

(8) *Body weight and food/water consumption*. (i) Males and females should be weighed on the first day of dosing, at least weekly thereafter, and at termination. During pregnancy, females should be weighed on days 0, 7, 14 and 20 and within 24 hours of parturition (day 0 or 1 post-partum), and day 4 post-partum. These observations should be reported individually for each adult animal.

(ii) During pre-mating, pregnancy and lactation, food consumption should be measured at least weekly. The measurement of food consumption during mating is optional. Water consumption during these periods should also be measured, when the test substance is administered by that medium.

(9) *Hematology*. (i) Once during the study, the following hematological examinations should be made in five males and five females randomly selected from each group: hematocrit, hemoglobin concentration, erythrocyte count, total and differential leucocyte count, platelet count and a measure of blood clotting time/potential.

(ii) Blood samples should be taken from a named site. Females should be in a physiologically similar state during sampling. In order to avoid practical difficulties related to the variability in the onset of gestation, blood collection in females may be done at the end of the pre-mating period as an alternative to sampling just prior to, or as part of, the procedure for sacrificing the animals. Blood samples of males should preferably be taken just prior to, or as part of, the procedure for sacrificing the animals. Alternatively, blood collection in males may also be done at the end of the pre-mating period when this time point was preferred for females.

(iii) Blood samples should be stored under appropriate conditions.

(10) *Clinical biochemistry*. (i) Clinical biochemistry determinations to investigate major toxic effects in tissues and, specifically, effects on kidney and liver, should be performed on blood samples obtained from the selected five males and five females of each group. Overnight fasting of the animals prior

to blood sampling is recommended[1]. Investigations of plasma or serum must include sodium, potassium, glucose, total cholesterol, urea, creatinine, total protein and albumin, at least two enzymes indicative of hepatocellular effects (such as alanine aminotransferase, aspartate aminotransferase and sorbitol dehydrogenase) and bile acids. Measurements of additional enzymes (of hepatic or other origin) may provide useful information under certain circumstances.

(ii) Optionally, the following urinalysis determinations could be performed in five randomly selected males of each group during the last week of the study using timed urine volume collection; appearance, volume, osmolality or specific gravity, pH, protein, glucose and blood or blood cells.

(iii) In addition, studies to investigate serum markers of general tissue damage should be considered. Other determinations that should be carried out if the known properties of the test substance may, or are suspected to, affect related metabolic profiles include calcium, phosphate, fasting triglycerides and fasting glucose, specific hormones, methemoglobin and cholinesterase. These need to be identified on a case-by-case basis.

(iv) Overall, there is a need for a flexible approach, depending on the observed and/or expected effect with a given compound.

(v) If historical baseline data are inadequate, consideration should be given to determination of hematological and clinical biochemistry variables before dosing commences.

[1] For a number of measurements in serum and plasma, most notably for glucose, overnight fasting would be preferable. The major reason for this preference is that the increased variability which would inevitably result from non-fasting, would tend to mask more subtle effects and make interpretation difficult. On the other hand, however, overnight fasting may interfere with the general metabolism of the (pregnant) animals, disturbs lactation and nursing behaviour, and, particularly in feeding studies, may disturb the daily exposure to the test substance. If overnight fasting is adopted, clinical biochemical determinations should be performed after the conduct of functional observations in week 4 of the study.

(11) *Pathology*—(i) *Gross necropsy*. (A) All adult animals in the study must be subjected to a full, detailed gross necropsy which includes careful examination of the external surface of the body, all orifices, and the cranial, thoracic and abdominal cavities and their contents. Special attention should be paid to the organs of the reproductive system. The number of implantation sites should be recorded. Corpora lutea should be counted.

(B) The testes and epididymides of all adult males should be weighed and the ovaries, testes, epididymides, accessory sex organs, and all organs showing macroscopic lesions of all adult animals, should be preserved.

(C) In addition, for five adult males and females, randomly selected from each group, the liver, kidneys, adrenals, thymus, spleen, brain and heart should be trimmed of any adherent tissue, as appropriate and their wet weight taken as soon as possible after dissection to avoid drying. Of the selected males and females, the following tissues should also be preserved in the most appropriate fixation medium for both the type of tissue and the intended subsequent histopathological examination: all gross lesions, brain (representative regions including cerebrum, cerebellum and pons), spinal cord, stomach, small and large intestines (including Peyer's patches), liver, kidneys, adrenals, spleen, heart, thymus, thyroid, trachea and lungs (preserved by inflation with fixative and then immersion), uterus, urinary bladder, lymph nodes (preferably 1 lymph node covering the route of administration and another one distant from the route of administration to cover systemic effects), peripheral nerve (sciatic or tibial) preferably in close proximity to the muscle, and a section of bone marrow (or, alternatively, a fresh mounted marrow aspirate).

(D) Formalin fixation is not recommended for routine examination of testes and epididymides. An acceptable method is the use of Bouin's fixative for these tissues. The clinical and other findings may suggest the need to examine additional tissues. Also, any organs considered likely to be target organs based on the known properties of the test substance should be preserved.

(E) Dead pups and pups sacrificed at day 4 post-partum, or shortly thereafter, should, at least, be carefully examined externally for gross abnormalities.

(ii) *Histopathology*. (A) Full histopathology should be conducted on the preserved organs and tissues of the selected animals in the control and high dose groups and all gross lesions. These examinations should be extended to animals of other dosage groups if treatment-related changes are observed in the high dose group.

(B) Detailed testicular histopathological examination (e.g., using Bouin's fixative, paraffin embedding and transverse sections of 4–5 ±m thickness) should be conducted with special emphasis on stages of spermatogenesis and histopathology interstitial testicular cell structure. The evaluation should identify treatment-related effects such as retained spermatids, missing germ cell layers or types, multinucleated giant cells or sloughing of spermatogenic cells into the lumen (the specifications for the evaluation are discussed in paragraph (g)(2) of this section). Examination of the intact epididymis should include the caput, corpus, and cauda, which can be accomplished by evaluation of a longitudinal section. The epididymis should be evaluated for leukocyte infiltration, change in prevalence of cell types, aberrant cell types, and phagocytosis of sperm. Periodic acid-Schiff (PAS) and hematoxylin staining may be used for examination of the male reproductive organs. Histopathological examination of the ovary should detect qualitative depletion of the primordial follicle population.

(C) When a satellite group is used, histopathology should be performed on tissues and organs identified as showing effects in the treated groups.

(g) *Data and reporting*—(1) *Data*. Individual animal data should be provided. Additionally, all data should be summarised in tabular form, showing for each test group the number of animals at the start of the test, the number of animals found dead during the test or sacrificed for humane reasons, the time of any death or humane sacrifice, the number of fertile animals, the number of pregnant females, the number of animals showing signs of toxicity, a description of the signs of toxicity observed, including time of onset, duration, and severity of any toxic effects, the types of histopathological changes, and all relevant litter data.

(2) *Evaluation of results*. (i) The findings of this toxicity study should be evaluated in terms of the observed effects, necropsy and microscopic findings. The evaluation will include the relationship between the dose of the test substance and the presence or absence, incidence and severity of abnormalities, including gross lesions, identified target organs, infertility, clinical abnormalities, affected reproductive and litter performance, body weight changes, effects on mortality and any other toxic effects.

(ii) Because of the short period of treatment of the male, the histopathology of the testes and epididymides must be considered along with the fertility data, when assessing male reproduction effects. The use of historic control data on reproduction/development (e.g. for litter size) where available may also be useful as an aid to the interpretation of the study.

(iii) When possible, numerical results should be evaluated by an appropriate and general acceptable statistical method. The statistical methods should be selected during the design of the study. Due to the limited dimensions of the study, statistical analysis in the form of tests for ''significance'' are of limited value for many endpoints, especially reproductive endpoints. Some of the most widely used methods, especially parametric tests for measures of central tendency, are inappropriate. If statistical analyses are used then the method chosen should be appropriate for the distribution of the variable examined and be selected prior to the start of the study.

(3) *Test report*. The test report must include the following information:

(i) Test substance:

(A) Physical nature and, where relevant, physicochemical properties.

(B) Identification data.

(ii) Vehicle (if appropriate): Justification for choice of vehicle, if other than water.

(iii) Test animals:

(A) Species/strain used.

(B) Number, age and sex of animals.

(C) Source, housing conditions, diet, etc.

(D) Individual weights of animals at the start of the test.

(iv) Test conditions:

(A) Rationale for dose level selection.

(B) Details of test substance formulation/diet preparation, achieved concentration, stability and homogeneity of the preparation.

(C) Details of the administration of the test substance.

(D) Conversion from diet/drinking water test substance concentration (parts per mission (ppm)) to the actual dose (mg/kg body weight/day), if applicable.

(E) Details of food and water quality.

(v) Results (toxic response data by sex and dose):

(A) Time of death during the study or whether animals survived to termination.

(B) Nature, severity and duration of clinical observations (whether reversible or not).

(C) Body weight/body weight change data.

(D) Food consumption and water consumption, if applicable.

(E) Sensory activity, grip strength and motor activity assessments.

(F) Hematological tests with relevant baseline values,

(G) Clinical biochemistry tests with relevant baseline values.

(H) Effects on reproduction, including information on mating/precoital interval, fertility, fecundity and gestation duration.

(I) Effects on offspring, including number of pups born (live and dead), sex ratio, postnatal growth (pup weights) and survival (litter size), gross abnormalities and clinical observations during lactation.

(J) Body weight at termination and organ weight data for the parental animals.

(K) Necropsy data, including number of implantations and number of corpora lutea.

(L) Calculations of pre- and postimplantation loss.

(M) Detailed description of histopathological findings.

(N) Statistical treatment of results, where appropriate.

(vi) Discussion of results.

(vii) Conclusions.

(h) *References*. For additional background information on this test guideline, the following references should be consulted. These references are available at the addresses in § 700.17(b)(1) and (2) of this chapter.

(1) Mitsumori, K., Kodama, Y., Uchida, O., Takada, K., Saito, M. Naito, K., Tanaka, S., Kurokawa, Y., Usami, M., Kawashima, K., Yasuhara, K., Toyoda, K., Onodera, H., Furukawa, F., Takahashi, M. and Hayashi, Y., (1994). Confirmation Study, Using Nitro-Benzene, of the Combined Repeat Dose and Reproductive/ Developmental Toxicity Test Protocol Proposed by the Organization for Economic Cooperation and Development (OECD). *Journal of Toxicology and Science*, 19:141–149.

(2) Tanaka, S., Kawashima, K., Naito, K., Usami, M., Nakadate, M., Imaida, K., Takahashi, M., Hayashi, Y., Kurokawa, Y. and Tobe, M. (1992). Combined Repeat Dose and Reproductive/ Developmental Toxicity Screening Test (OECD): Familiarization Using Cyclophosphamide. *Fundamental and Applied Toxicology*, 18:89–95.

(3) Tupper D.E., Wallace R.B. (1980). Utility of the Neurologic Examination in Rats. *Acta Neurobiological Exposure*, 40:999–1003.

(4) Gad S.C. (1982). A Neuromuscular Screen for Use in Industrial Toxicology. *Journal of Toxicology and Environmental Health*, 9:691–704.

(5) Moser V.C., McDaniel K.M., Phillips P.M. (1991). Rat Strain and Stock Comparisons Using a Functional Observational Battery: Baseline Values and Effects of Amitraz. *Toxicology and Applied Pharmacology*, 108:267–283.

(6) Meyer O.A., Tilson H.A., Byrd W.C., Riley M.T. (1979). A Method for the Routine Assessment of Fore- and Hindlimb Grip Strength of Rats and Mice. *Neurobehavorial Toxicology*, 1:233–236.

(7) Crofton K.M., Howard J.L., Moser V.C., Gill M.W., Reiter L.W., Tilson H.A., MacPhail R.C. (1991). Interlaboratory Comparison of Motor Activity Experiments: Implication for Neurotoxicological Assessments.

Neurotoxicology and Teratology 13:599–609.

[65 FR 78793, Dec. 15, 2000, as amended at 77 FR 42694, Aug. 3, 2012]

§ 799.9370 TSCA prenatal developmental toxicity.

(a) *Scope* This section is intended to meet the testing requirements under section 4 of TSCA. This guideline for developmental toxicity testing is designed to provide general information concerning the effects of exposure on the pregnant test animal and on the developing organism; this may include death, structural abnormalities, or altered growth and an assessment of maternal effects. For information on testing for functional deficiencies and other postnatal effects, the guidelines for the two-generation reproductive toxicity study and the developmental neurotoxicity study should be consulted.

(b) *Source*. The source material used in developing this TSCA test guideline is the OPPTS harmonized test guideline 870.3700 (February 1996 Public Draft). This source is available at the address in paragraph (h) of this section.

(c) *Good laboratory practice standards*. The study shall be conducted in compliance with 40 CFR Part 792—Good Laboratory Practice Standards.

(d) *Principle of the test method*. The test substance is administered to pregnant animals at least from implantation to one day prior to the expected day of parturition. Shortly before the expected date of delivery, the pregnant females are terminated, the uterine contents are examined, and the fetuses are processed for visceral and skeletal evaluation.

(e) *Test procedures*—(1) *Animal selection*—(i) *Species and strain*. It is recommended that testing be performed in the most relevant species, and that laboratory species and strains which are commonly used in prenatal developmental toxicity testing be employed. The preferred rodent species is the rat and the preferred non-rodent species is the rabbit.

(ii) *Age*. Young adult animals shall be used.

(iii) *Sex*. Nulliparous female animals shall be used at each dose level. Animals should be mated with males of the same species and strain, avoiding the mating of siblings, if parentage is known. Day 0 in the test is the day on which a vaginal plug and/or sperm are observed in the rodent or that insemination is performed or observed in the rabbit.

(iv) *Number of animals*. Each test and control group shall contain a sufficient number of animals to yield approximately 20 animals with implantation sites at necropsy.

(2) *Administration of test and control substances*—(i) *Dose levels and dose selection*. (A) At least three-dose levels and a concurrent control shall be used. Healthy animals shall be randomly assigned to the control and treatment groups, in a manner which results in comparable mean body weight values among all groups. The dose levels should be spaced to produce a gradation of toxic effects. Unless limited by the physical/chemical nature or biological properties of the test substance, the highest dose shall be chosen with the aim to induce some developmental and/or maternal toxicity but not death or severe suffering. In the case of maternal mortality, this should not be more than approximately 10%. The intermediate dose levels should produce minimal observable toxic effects. The lowest dose level should not produce any evidence of either maternal or developmental toxicity (i.e., the no-observed-adverse-effect level, NOAEL) or should be at or near the limit of detection for the most sensitive endpoint. Two- or four-fold intervals are frequently optimal for spacing the dose levels, and the addition of a fourth test group is often preferable to using very large intervals (e.g., more than a factor of 10) between dosages.

(B) It is desirable that additional information on metabolism and pharmacokinetics of the test substance be available to demonstrate the adequacy of the dosing regimen. This information should be available prior to testing.

(C) The highest dose tested need not exceed 1,000 mg/kg/day by oral or dermal administration, or 2 mg/L (or the maximum attainable concentration) by inhalation, unless potential human exposure data indicate the need for higher doses. If a test performed at the

limit dose level, using the procedures described for this study, produces no observable toxicity and if an effect would not be expected based upon data from structurally related compounds, then a full study using three-dose levels may not be considered necessary.

(ii) *Control group.* (A) A concurrent control group shall be used. This group shall be a sham-treated control group or a vehicle-control group if a vehicle is used in administering the test substance.

(B) The vehicle control group should receive the vehicle in the highest volume used.

(C) If a vehicle or other additive is used to facilitate dosing, consideration should be given to the following characteristics: Effects on the absorption, distribution, metabolism, or retention of the test substance; effects on the chemical properties of the test substance which may alter its toxic characteristics; and effects on the food or water consumption or the nutritional status of the animals.

(iii) *Route of administration.* (A) The test substance or vehicle is usually administered orally by intubation.

(B) If another route of administration is used, for example, when the route of administration is based upon the principal route of potential human exposure, the tester shall provide justification and reasoning for its selection, and appropriate modifications may be necessary. Care should be taken to minimize stress on the maternal animals. For materials administered by inhalation, whole-body exposure is preferable to nose-only exposure due to the stress of restraint required for nose-only exposure.

(C) The test substance shall be administered at approximately the same time each day.

(D) When administered by gavage or dermal application, the dose to each animal shall be based on the most recent individual body weight determination.

(iv) *Dosing schedule.* At minimum, the test substance shall be administered daily from implantation to the day before cesarean section on the day prior to the expected day of parturition. Alternatively, if preliminary studies do not indicate a high potential for preimplantation loss, treatment may be extended to include the entire period of gestation, from fertilization to approximately 1 day prior to the expected day of termination.

(f) *Observation of animals*—(1) *Maternal.* (i) Each animal shall be observed at least once daily, considering the peak period of anticipated effects after dosing. Mortality, moribundity, pertinent behavioral changes, and all signs of overt toxicity shall be recorded at this cageside observation. In addition, thorough physical examinations shall be conducted at the same time maternal body weights are recorded.

(ii) Animals shall be weighed on day 0, at termination, and at least at 3-day intervals during the dosing period.

(iii) Food consumption shall be recorded on at least 3-day intervals, preferably on days when body weights are recorded.

(iv) (A) Females shall be terminated immediately prior to the expected day of delivery.

(B) Females showing signs of abortion or premature delivery prior to scheduled termination shall be killed and subjected to a thorough macroscopic examination.

(v) At the time of termination or death during the study, the dam shall be examined macroscopically for any structural abnormalities or pathological changes which may have influenced the pregnancy. Evaluation of the dams during cesarean section and subsequent fetal analyses should be conducted without knowledge of treatment group in order to minimize bias.

(vi) (A) Immediately after termination or as soon as possible after death, the uteri shall be removed and the pregnancy status of the animals ascertained. Uteri that appear nongravid shall be further examined (e.g. by ammonium sulfide staining) to confirm the nonpregnant status.

(B) Each gravid uterus (with cervix) shall be weighed. Gravid uterine weights should not be obtained from dead animals if autolysis or decomposition has occurred.

(C) The number of corpora lutea shall be determined for pregnant animals.

(D) The uterine contents shall be examined for embryonic or fetal deaths and the number of viable fetuses. The

degree of resorption shall be described in order to help estimate the relative time of death of the conceptus.

(2) *Fetal*. (i) The sex and body weight of each fetus shall be determined.

(ii) Each fetus shall be examined for external anomalies.

(iii) Fetuses shall be examined for skeletal and soft tissue anomalies (e.g. variations and malformations or other categories of anomalies as defined by the performing laboratory).

(A) For rodents, approximately one-half of each litter shall be prepared by standard techniques and examined for skeletal alterations, preferably bone and cartilage. The remainder shall be prepared and examined for soft tissue anomalies, using appropriate serial sectioning or gross dissection techniques. It is also acceptable to examine all fetuses by careful dissection for soft tissue anomalies followed by an examination for skeletal anomalies.

(B) For rabbits, all fetuses shall be examined for both soft tissue and skeletal alterations. The bodies of these fetuses should be evaluated by careful dissection for soft-tissue anomalies, followed by preparation and examination for skeletal anomalies. An adequate evaluation of the internal structures of the head, including the eyes, brain, nasal passages, and tongue, should be conducted for at least half of the fetuses.

(g) *Data and reporting*—(1) *Treatment of results*. Data shall be reported individually and summarized in tabular form, showing for each test group the types of change and the number of dams, fetuses, and litters displaying each type of change.

(2) *Evaluation of study results*. The following shall be provided:

(i) Maternal and fetal test results, including an evaluation of the relationship, or lack thereof, between the exposure of the animals to the test substance and the incidence and severity of all findings.

(ii) Criteria used for categorizing fetal external, soft tissue, and skeletal anomalies.

(iii) When appropriate, historical control data to enhance interpretation of study results. Historical data (on litter incidence and fetal incidence within litter), when used, should be compiled, presented, and analyzed in an appropriate and relevant manner. In order to justify its use as an analytical tool, information such as the dates of study conduct, the strain and source of the animals, and the vehicle and route of administration should be included.

(iv) Statistical analysis of the study findings should include sufficient information on the method of analysis, so that an independent reviewer/statistician can reevaluate and reconstruct the analysis. In the evaluation of study data, the litter should be considered the basic unit of analysis.

(v) In any study which demonstrates an absence of toxic effects, further investigation to establish absorption and bioavailability of the test substance should be considered.

(3) *Test report*. In addition to the reporting requirements as specified under 40 CFR part 792, subpart J, the following specific information shall be reported. Both individual and summary data should be presented.

(i) Species and strain.

(ii) Maternal toxic response data by dose, including but not limited to:

(A) The number of animals at the start of the test, the number of animals surviving, the number pregnant, and the number aborting.

(B) Day of death during the study or whether animals survived to termination.

(C) Day of observation of each abnormal clinical sign and its subsequent course.

(D) Body weight and body weight change data, including body weight change adjusted for gravid uterine weight.

(E) Food consumption and, if applicable, water consumption data.

(F) Necropsy findings, including gravid uterine weight.

(iii) Developmental endpoints by dose for litters with implants, including:

(A) Corpora lutea counts.

(B) Implantation data, number and percent of live and dead fetuses, and resorptions (early and late).

(C) Pre- and postimplantation loss calculations.

(iv) Developmental endpoints by dose for litters with live fetuses, including:

(A) Number and percent of live offspring.

(B) Sex ratio.

(C) Fetal body weight data, preferably by sex and with sexes combined.

(D) External, soft tissue, and skeletal malformation and variation data. The total number and percent of fetuses and litters with any external, soft tissue, or skeletal alteration, as well as the types and incidences of individual anomalies, should be reported.

(v) The numbers used in calculating all percentages or indices.

(vi) Adequate statistical treatment of results.

(vii) A copy of the study protocol and any amendments should be included.

(h) *References*. For additional background information on this test guideline, the following references should be consulted. These references are available at the addresses in §700.17(b)(1) and (2) of this chapter.

(1) Aliverti, V.L. *et al*. The extent of fetal ossification as an index of delayed development in teratogenicity studies in the rat. *Teratology*. 20:237–242 (1979).

(2) Barrow, M.V. and W.J. Taylor. A rapid method for detecting malformations in rat fetuses. *Journal of Morphology* 127:291–306 (1969).

(3) Burdi, A.R. Toluidine blue-alizarin red S staining of cartilage and bone in whole-mount skeltons *in vitro*. *Stain Technolology*. 40:45–48 (1965).

(4) Edwards, J.A. Ed. Woolam,D.H.M. The external development of the rabbit and rat embryo. Vol. 3. *Advances in Teratology* (Academic, NY, 1968).

(5) Fritz, H. Prenatal ossification in rabbits as indicative of fetal maturity. *Teratology*. 11:313–320 (1974).

(6) Fritz, H. and Hess, R. Ossification of the rat and mouse skeleton in the perinatal period. *Teratology*. 3:331–338 (1970).

(7) Gibson, J.P. *et al*. Use of the rabbit in teratogenicity studies. *Toxicology and Applied Pharmacology*. 9:398–408 (1966).

(8) Inouye, M. Differential staining of cartilage and bone in fetal mouse skeleton by alcian blue and alizarin red S. *Congenital Anomalies*. 16(3):171–173 (1976).

(9) Igarashi, E. *et al*. Frequence of spontaneous axial skeletal variations detected by the double staining technique for ossified and cartilaginous skeleton in rat fetuses. *Congenital Anomalies*. 32:381–391 (1992).

(10) Kimmel, C.A. *et al*. Skeletal development following heat exposure in the rat. *Teratology*. 47:229–242 (1993).

(11) Kimmel, C.A. and Francis, E.Z. Proceedings of the workshop on the acceptability and interpretation of dermal developmental toxicity studies. *Fundamental and Applied Toxicology*. 14:386–398 (1990).

(12) Kimmel, C.A. and C. Trammell. A rapid procedure for routine double staining of cartilage and bone in fetal and adult animals. *Stain Technology*. 56:271–273 (1981).

(13) Kimmel, C.A. and Wilson, J.G. Skeletal deviation in rats: malformations or variations? *Teratology*. 8:309–316 (1973).

(14) Marr, M.C. *et al*. Comparison of single and double staining for evaluation of skeletal development: the effects of ethylene glycol (EG) in CD rats. *Teratology*. 37:476 (1988).

(15) Marr, M.C. *et al*. Developmental stages of the CD (Sprague-Dawley) rat skeleton after maternal exposure to ethylene glycol. *Teratology*. 46:169–181 (1992).

(16) McLeod, M.J. Differential staining of cartilage and bone in whole mouse fetuses by Alcian blue and alizarin red S. *Teratology*. 22:299–301 (1980).

(17) Monie, I.W. *et al*. Dissection procedures for rat fetuses permitting alizarin red staining of skeleton and histological study of viscera. *Supplement to Teratology Workshop Manual*. pp. 163–173 (1965).

(18) Organisation for Economic Cooperation and Development, No. 414: Teratogenicity, Guideline for Testing of Chemicals. [C(83)44 (Final)] (1983).

(19) Salewski (Koeln), V.E. Faerbermethode zum makroskopischen nachweis von implantations stellen am uterus der ratte. *Naunyn-Schmeidebergs Archiv für Pharmakologie und Experimentelle Pathologie*. 247:367 (1964).

(20) Spark, C. and Dawson,A.B. The order and time of appearance of centers of ossification in the fore and hind limbs of the albino rat, with special reference to the possible influence of the sex factor. *American Journal of Anatomy*. 41:411–445 (1928).

(21) Staples, R.E. Detection of visceral alterations in mammalian fetuses. *Teratology*. 9(3):A37–A38 (1974).

(22) Staples, R.E. and Schnell, V.L. Refinements in rapid clearing technique in the KOH—alizarin red S method for fetal bone. *Stain Technology*. 39:61–63 (1964).

(23) Strong, R.M. The order time and rate of ossification of the albino rat (*mus norvegicus albinus*) skeleton. *American Journal of Anatomy*. 36: 313–355 (1928).

(24) Stuckhardt, J.L. and Poppe, S.M. Fresh visceral examination of rat and rabbit fetuses used in teratogenicity testing. *Teratogenesis, Carcinogenesis, and Mutagenesis*. 4:181–188 (1984).

(25) Van Julsingha, E.B. and Bennett,C.G. Eds. Neubert, D., Merker, H.J., and Kwasigroch, T.E. A dissecting procedure for the detection of anomalies in the rabbit foetal head. *Methods in Prenatal Toxicology* (University of Chicago, Chicago, IL, 1977) pp. 126–144.

(26) Whitaker, J. and Dix, D.M. Double-staining for rat foetus skeletons in teratological studies. *Laboratory Animals*. 13:309–310 (1979).

(27) Wilson, J.G. Eds. Wilson, J.G. and Warkany, J. Embryological considerations in teratology. *Teratology: Principles and Techniques* (University of Chicago, Chicago, IL, 1965) pp. 251–277.

[62 FR 43824, Aug. 15, 1997, as amended at 77 FR 46294, Aug. 3, 2012]

§ 799.9380 TSCA reproduction and fertility effects.

(a) *Scope*. This section is intended to meet the testing requirements under section 4 of the TSCA. This section is for two-generation reproduction testing and is designed to provide general information concerning the effects of a test substance on the integrity and performance of the male and female reproductive systems, including gonadal function, the estrous cycle, mating behavior, conception, gestation, parturition, lactation, and weaning, and on the growth and development of the offspring. The study may also provide information about the effects of the test substance on neonatal morbidity, mortality, target organs in the offspring, and preliminary data on prenatal and postnatal developmental toxicity and serve as a guide for subsequent tests. Additionally, since the study design includes *in utero* as well as postnatal exposure, this study provides the opportunity to examine the susceptibility of the immature/neonatal animal.

(b) *Source*. The source material used in developing this TSCA test guideline is the OPPTS harmonized test guideline 870.3800 (February 1996 Public Draft). This source is available at the address in paragraph (g) of this section.

(c) *Good laboratory practice standards*. The study shall be conducted in compliance with 40 CFR part 792—Good Laboratory Practice Standards.

(d) *Principle of the test method*. The test substance is administered to parental (P) animals prior to and during their mating, during the resultant pregnancies, and through the weaning of their F1 offspring. The substance is then administered to selected F1 offspring during their growth into adulthood, mating, and production of an F2 generation, until the F2 generation is weaned.

(e) *Test procedures*—(1) *Animal selection*—(i) *Species and strain*. The rat is the most commonly used species for testing. If another mammalian species is used, the tester shall provide justification/reasoning for its selection, and appropriate modifications will be necessary. Healthy parental animals, which have been acclimated to laboratory conditions for at least 5 days and have not been subjected to previous experimental procedures, should be used. Strains of low fecundity shall not be used.

(ii) *Age*. Parental (P) animals shall be 5 to 9 weeks old at the start of dosing. The animals of all test groups should be of uniform weight, age, and parity as nearly as practicable, and should be representative of the species and strain under study.

(iii) *Sex*. (A) For an adequate assessment of fertility, both males and females shall be studied.

(B) The females shall be nulliparous and nonpregnant.

(iv) *Number of animals*. Each control group shall contain a sufficient number of mating pairs to yield approximately 20 pregnant females. Each test group shall contain a similar number of mating pairs.

(v) *Identification of animals.* Each animal shall be assigned a unique identification number. For the P generation, this should be done before dosing starts. For the F1 generation, this should be done for animals selected for mating; in addition, records indicating the litter of origin shall be maintained for all selected F1 animals.

(2) *Administration of test and control substances*—(i) *Dose levels and dose selection.* (A) At least three-dose levels and a concurrent control shall be used. Healthy animals should be randomly assigned to the control and treatment groups, in a manner which results in comparable mean body weight values among all groups. The dose levels should be spaced to produce a gradation of toxic effects. Unless limited by the physical/chemical nature or biological properties of the test substance, the highest dose should be chosen with the aim to induce some reproductive and/or systemic toxicity but not death or severe suffering. In the case of parental mortality, this should not be more than approximately 10%. The intermediate dose levels should produce minimal observable toxic effects. The lowest dose level should not produce any evidence of either systemic or reproductive toxicity (i.e., the no-observed-adverse-effect level, NOAEL) or should be at or near the limit of detection for the most sensitive endpoint. Two- or four-fold intervals are frequently optimal for spacing the dose levels, and the addition of a fourth test group is often preferable to using very large intervals (e.g., more than a factor of 10) between dosages.

(B) It is desirable that additional information on metabolism and pharmacokinetics of the test substance be available to demonstrate the adequacy of the dosing regimen. This information should be available prior to testing.

(C) The highest dose tested should not exceed 1,000 mg/kg/day (or 20,000 ppm in the diet), unless potential human exposure data indicate the need for higher doses. If a test performed at the limit dose level, using the procedures described for this study, produces no observable toxicity and if an effect would not be expected based upon data from structurally related compounds, then a full study using three dose levels may not be considered necessary.

(ii) *Control group.* (A) A concurrent control group shall be used. This group shall be an untreated or sham treated group or a vehicle-control group if a vehicle is used in administering the test substance.

(B) If a vehicle is used in administering the test substance, the control group shall receive the vehicle in the highest volume used.

(C) If a vehicle or other additive is used to facilitate dosing, consideration should be given to the following characteristics: Effects on the absorption, distribution, metabolism, or retention of the test substance; effects on the chemical properties of the test substance which may alter its toxic characteristics; and effects on the food or water consumption or the nutritional status of the animals.

(D) If a test substance is administered in the diet and causes reduced dietary intake or utilization, the use of a pair-fed control group may be considered necessary.

(iii) *Route of administration.* (A) The test substance is usually administered by the oral route (diet, drinking water, or gavage).

(B) If administered by gavage or dermal application, the dosage administered to each animal prior to mating and during gestation and lactation shall be based on the individual animal body weight and adjusted weekly at a minimum.

(C) If another route of administration is used, for example, when the route of administration is based upon the principal route of potential human exposure, the tester should provide justification and reasoning for its selection, and appropriate modifications may be necessary. Care should be taken to minimize stress on the maternal animals and their litters during gestation and lactation.

(D) All animals should be dosed by the same method during the appropriate experimental period.

(iv) *Dosing schedule.* (A) The animals should be dosed with the test substance on a 7-days-a-week basis.

(B) Daily dosing of the parental (P) males and females shall begin when they are 5 to 9 weeks old. Daily dosing

of the F1 males and females shall begin at weaning. For both sexes (P and F1), dosing shall be continued for at least 10 weeks before the mating period.

(C) Daily dosing of the P and F1 males and females shall continue until termination.

(3) *Mating procedure*—(i) *Parental.* (A) For each mating, each female shall be placed with a single randomly selected male from the same dose level (1:1 mating) until evidence of copulation is observed or either 3 estrous periods or 2 weeks has elapsed. Animals should be separated as soon as possible after evidence of copulation is observed. If mating has not occurred after 2 weeks or 3 estrous periods, the animals should be separated without further opportunity for mating. Mating pairs should be clearly identified in the data.

(B) Vaginal smears shall be collected daily and examined for all females during mating, until evidence of copulation is observed.

(C) Each day, the females shall be examined for presence of sperm or vaginal plugs. Day 0 of pregnancy is defined as the day a vaginal plug or sperm are found.

(ii) *F1 mating.* For mating the F1 offspring, at least one male and one female should be randomly selected from each litter for mating with another pup of the same dose level but different litter, to produce the F2 generation.

(iii) *Second mating.* In certain instances, such as poor reproductive performance in the controls, or in the event of treatment-related alterations in litter size, the adults may be remated to produce an F1b or F2b litter. If production of a second litter is deemed necessary in either generation, the dams should be remated approximately 1–2 weeks following weaning of the last F1a or F2a litter.

(iv) *Special housing.* After evidence of copulation, animals that are presumed to be pregnant shall be caged separately in delivery or maternity cages. Pregnant animals shall be provided with nesting materials when parturition is near.

(v) *Standardization of litter sizes.* (A) Animals should be allowed to litter normally and rear their offspring to weaning. Standardization of litter sizes is optional.

(B) If standardization is performed, the following procedure should be used. On day 4 after birth, the size of each litter may be adjusted by eliminating extra pups by random selection to yield, as nearly as possible, four males and four females per litter or five males and five females per litter. Selective elimination of pups, i.e. based upon body weight, is not appropriate. Whenever the number of male or female pups prevents having four (or five) of each sex per litter, partial adjustment (for example, five males and three females, or four males and six females) is acceptable. Adjustments are not appropriate for litters of eight pups or less.

(4) *Observation of animals*—(i) *Parental.* (A) Throughout the test period, each animal shall be observed at least once daily, considering the peak period of anticipated effects after dosing. Mortality, moribundity, pertinent behavioral changes, signs of difficult or prolonged parturition, and all signs of overt toxicity shall be recorded at this cageside examination. In addition, thorough physical examinations should be conducted weekly on each animal.

(B) Parental animals (P and F1) shall be weighed on the first day of dosing and weekly thereafter. Parental females (P and F1) should be weighed at a minimum on approximately gestation days 0, 7, 14, and 21, and during lactation on the same days as the weighing of litters.

(C) During the premating and gestation periods, food consumption shall be measured weekly at a minimum. Water consumption should be measured weekly at a minimum if the test substance is administered in the water.

(D) Estrous cycle length and pattern should be evaluated by vaginal smears for all P and F1 females during a minimum of 3 weeks prior to mating and throughout cohabitation; care should be taken to prevent the induction of pseudopregnancy.

(E) For all P and F1 males at termination, sperm from one testis and one epididymis shall be collected for enumeration of homogenization-resistant spermatids and cauda epididymal sperm reserves, respectively. In addition, sperm from the cauda epididymis (or vas deferens) should be collected for

evaluation of sperm motility and sperm morphology.

(*1*) The total number of homogenization-resistant testicular sperm and cauda epididymal sperm should be enumerated. The method described in the reference under paragraph (g)(8) of this section may be used. Cauda sperm reserves can be derived from the concentration and volume of sperm in the suspension used to complete the qualitative evaluations, and the number of sperm recovered by subsequent mincing and/or homogenizing of the remaining cauda tissue. Enumeration in only control and high-dose P and F1 males may be performed unless treatment-related effects are observed; in that case, the lower dose groups should also be evaluated.

(*2*) An evaluation of epididymal (or vas deferens) sperm motility should be performed. Sperm should be recovered while minimizing damage (the evaluation techniques as described in the reference under paragraph (g)(8) of this section may be used), and the percentage of progressively motile sperm should be determined either subjectively or objectively. For objective evaluations, an acceptable counting chamber of sufficient depth can be used to effectively combine the assessment of motility with sperm count and sperm morphology. When computer-assisted motion analysis is performed, the derivation of progressive motility relies on user-defined thresholds for average path velocity and straightness or linear index. If samples are videotaped, or images otherwise recorded, at the time of necropsy, subsequent analysis of only control and high-dose P and F1 males may be performed unless treatment-related effects are observed; in that case, the lower dose groups should also be evaluated. In the absence of a video or digital image, all samples in all treatment groups should be analyzed at necropsy.

(*3*) A morphological evaluation of an epididymal (or vas deferens) sperm sample shall be performed. Sperm (at least 200 per sample) should be examined as fixed, wet preparations (the techniques for such examinations is described in the references under paragraphs (g)(4) and (g)(8) of this section may be used) and classified as either normal (both head and midpiece/tail appear normal) or abnormal. Examples of morphologic sperm abnormalities would include fusion, isolated heads, and misshapen heads and/or tails. Evaluation of only control and high-dose P and F1 males may be performed unless treatment-related effects are observed; in that case, the lower dose groups should also be evaluated.

(ii) *Offspring*. (A) Each litter should be examined as soon as possible after delivery (lactation day 0) to establish the number and sex of pups, stillbirths, live births, and the presence of gross anomalies. Pups found dead on day 0 should be examined for possible defects and cause of death.

(B) Live pups should be counted, sexed, and weighed individually at birth, or soon thereafter, at least on days 4, 7, 14, and 21 of lactation, at the time of vaginal patency or balanopreputial separation, and at termination.

(C) The age of vaginal opening and preputial separation should be determined for F1 weanlings selected for mating. If there is a treatment-related effect in F1 sex ratio or sexual maturation, anogenital distance should be measured on day 0 for all F2 pups.

(5) *Termination schedule*. (i) All P and F1 adult males and females should be terminated when they are no longer needed for assessment of reproductive effects.

(ii) F1 offspring not selected for mating and all F2 offspring should be terminated at comparable ages after weaning.

(6) *Gross necropsy*. (i) At the time of termination or death during the study, all parental animals (P and F1) and when litter size permits at least three pups per sex per litter from the unselected F1 weanlings and the F2 weanlings shall be examined macroscopically for any structural abnormalities or pathological changes. Special attention shall be paid to the organs of the reproductive system.

(ii) Dead pups or pups that are terminated in a moribund condition should be examined for possible defects and/or cause of death.

(iii) At the time of necropsy, a vaginal smear should be examined to determine the stage of the estrous cycle.

The uteri of all cohabited females should be examined, in a manner which does not compromise histopathological evaluation, for the presence and number of implantation sites.

(7) *Organ weights.* (i) At the time of termination, the following organs of all P and F1 parental animals shall be weighed:

(A) Uterus (with oviducts and cervix), ovaries.

(B) Testes, epididymides (total weights for both and cauda weight for either one or both), seminal vesicles (with coagulating glands and their fluids), and prostate.

(C) Brain, pituitary, liver, kidneys, adrenal glands, spleen, and known target organs.

(ii) For F1 and F2 weanlings that are examined macroscopically, the following organs shall be weighed for one randomly selected pup per sex per litter.

(A) Brain.

(B) Spleen and thymus.

(8) *Tissue preservation.* The following organs and tissues, or representative samples thereof, shall be fixed and stored in a suitable medium for histopathological examination.

(i) For the parental (P and F1) animals:

(A) Vagina, uterus with oviducts, cervix, and ovaries.

(B) One testis (preserved in Bouins fixative or comparable preservative), one epididymis, seminal vesicles, prostate, and coagulating gland.

(C) Pituitary and adrenal glands.

(D) Target organs, when previously identified, from all P and F1 animals selected for mating.

(E) Grossly abnormal tissue.

(ii) For F1 and F2 weanlings selected for macroscopic examination: Grossly abnormal tissue and target organs, when known.

(9) *Histopathology*—(i) *Parental animals.* Full histopathology of the organs listed in paragraph (e)(8)(i) of this section shall be performed for ten randomly chosen high dose and control P and F1 animals per sex, for those animals that were selected for mating. Organs demonstrating treatment-related changes shall also be examined for the remainder of the high-dose and control animals and for all parental animals in the low- and mid-dose groups. Additionally, reproductive organs of the low- and mid-dose animals suspected of reduced fertility, e.g., those that failed to mate, conceive, sire, or deliver healthy offspring, or for which estrous cyclicity or sperm number, motility, or morphology were affected, shall be subjected to histopathological evaluation. Besides gross lesions such as atrophy or tumors, testicular histopathological examination should be conducted in order to identify treatment-related effects such as retained spermatids, missing germ cell layers or types, multinucleated giant cells, or sloughing of spermatogenic cells into the lumen. Examination of the intact epididymis should include the caput, corpus, and cauda, which can be accomplished by evaluation of a longitudinal section, and should be conducted in order to identify such lesions as sperm granulomas, leukocytic infiltration (inflammation), aberrant cell types within the lumen, or the absence of clear cells in the cauda epididymal epithelium. The postlactational ovary should contain primordial and growing follicles as well as the large corpora lutea of lactation. Histopathological examination should detect qualitative depletion of the primordial follicle population. A quantitative evaluation of primordial follicles should be conducted for all F1 females; the number of animals, ovarian section selection, and section sample size should be statistically appropriate for the evaluation procedure used. Examination should include enumeration of the number of primordial follicles, which can be combined with small growing follicles (see paragraphs (g)(1) and (g)(2) of this section), for comparison of treated and control ovaries.

(ii) *Weanling.* For F1 and F2 weanlings, histopathological examination of treatment-related abnormalities noted in macroscopic examination should be considered, if such evaluation were deemed appropriate and would contribute to the interpretation of the study data.

(f) *Data and reporting*—(1) *Treatment of results.* Data shall be reported individually and summarized in tabular form, showing for each test group the

types of change and the number of animals displaying each type of change.

(2) *Evaluation of study results.* (i) An evaluation of test results, including the statistical analysis, shall be provided. This should include an evaluation of the relationship, or lack thereof, between the exposure of the animals to the test substance and the incidence and severity of all abnormalities.

(ii) When appropriate, historical control data should be used to enhance interpretation of study results. Historical data, when used, should be compiled, presented, and analyzed in an appropriate and relevant manner. In order to justify its use as an analytical tool, information such as the dates of study conduct, the strain and source of the animals, and the vehicle and route of administration should be included.

(iii) Statistical analysis of the study findings should include sufficient information on the method of analysis, so that an independent reviewer/statistician can reevaluate and reconstruct the analysis.

(iv) In any study which demonstrates an absence of toxic effects, further investigation to establish absorption and bioavailability of the test substance should be considered.

(3) *Test report.* In addition to the reporting requirements as specified under 40 CFR part 792, subpart J, the following specific information shall be reported. Both individual and summary data should be presented.

(i) Species and strain.

(ii) Toxic response data by sex and dose, including indices of mating, fertility, gestation, birth, viability, and lactation; offspring sex ratio; precoital interval, including the number of days until mating and the number of estrous periods until mating; and duration of gestation calculated from day 0 of pregnancy. The report should provide the numbers used in calculating all indices.

(iii) Day (week) of death during the study or whether animals survived to termination; date (age) of litter termination.

(iv) Toxic or other effects on reproduction, offspring, or postnatal growth.

(v) Developmental milestone data (mean age of vaginal opening and preputial separation, and mean anogenital distance, when measured).

(vi) Number of P and F1 females cycling pattern and mean estrous cycle length.

(vii) Day (week) of observation of each abnormal sign and its subsequent course.

(viii) Body weight and body weight change data by sex for P, F1, and F2 animals.

(ix) Food (and water, if applicable) consumption, food efficiency (body weight gain per gram of food consumed), and test material consumption for P and F1 animals, except for the period of cohabitation.

(x) Total cauda epididymal sperm number, homogenization-resistant testis spermatid number, number and percent of progressively motile sperm, number and percent of morphologically normal sperm, and number and percent of sperm with each identified anomaly.

(xi) Stage of the estrous cycle at the time of termination for P and F1 parental females.

(xii) Necropsy findings.

(xiii) Implantation data and postimplantation loss calculations for P and F1 parental females.

(xiv) Absolute and adjusted organ weight data.

(xv) Detailed description of all histopathological findings.

(xvi) Adequate statistical treatment of results.

(xvii) A copy of the study protocol and any amendments should be included.

(g) *References.* For additional backgound information on this test guideline, the following references should be consulted. These references are available at the addresses in § 700.17(b)(1) and (2).

(1) Gray, L.E. *et al.* A dose-response analysis of methoxychlor-induced alterations of reproductive development and function in the rat. *Fundamental and Applied Toxicology*. 12:92–108 (1989).

(2) Heindel, J.J. *et al.* Ed. Hirshfield, A.N. Histological assessment of ovarian follicle number in mice as a screen of ovarian toxicity. *Growth Factors and the Ovary* (Plenum, NY, 1989) pp. 421–426.

(3) Korenbrot, C.C. *et al.* Preputial separation as an external sign of pubertal development in the male rat. *Biology of Reproduction*. 17:298–303 (1977).

(4) Linder, R.E. *et al.* Endpoints of spermatoxicity in the rat after short duration exposures to fourteen reproductive toxicants. *Reproductive Toxicology*. 6:491–505 (1992).

(5) Manson, J.M. and Kang, Y.J. Ed. Hayes, A.W. Test methods for assessing female reproductive and developmental toxicology. *Principles and Methods of Toxicology* (Raven, NY, 1989).

(6) Organisation for Economic Co-operation and Development, No. 416: Two Generation Reproduction Toxicity Study, Guidelines for Testing of Chemicals. [C(83)44 (Final)] (1983).

(7) Pederson, T. and Peters, H. Proposal for classification of oocytes and follicles in the mouse ovary. *Journal of Reproduction and Fertility*. 17:555–557 (1988).

(8) Seed, J., Chapin, R.E. E.D. Clegg, L.A. Dostal, R.H. Foote, M.E. Hurtt, G.R. Klinefelter, S.L. Makris, S.D. Perreault, S. Schrader, D. Seyler, R. Sprando, K.A. Treinen, D.N.R. Veeramachaneni, and Wise, L.D. Methods for assessing sperm motility, morphology, and counts in the rat, rabbit, and dog: a consensus report. *Reproductive Toxicology*. 10(3):237–244 (1996).

(9) Smith, B.J. *et al.* Comparison of random and serial sections in assessment of ovarian toxicity. *Reproductive Toxicology*. 5:379–383 (1991).

(10) Thomas, J.A. Eds. M.O. Amdur, J. Doull, and C.D. Klaassen. Toxic responses of the reproductive system. *Casarett and Doull's Toxicology* (Pergamon, NY, 1991).

(11) Working, P.K. and Hurtt, M. Computerized videomicrographic analysis of rat sperm motility. *Journal of Andrology*. 8:330–337 (1987).

(12) Zenick, H. *et al.* Ed. Hayes, A.W. Assessment of male reproductive toxicity: a risk assessment approach. *Principles and Methods of Toxicology* (Raven, NY, 1994).

[62 FR 43824, Aug. 15, 1997, as amended at 64 FR 35078, June 30, 1999; 77 FR 46294, Aug. 3, 2012]

§ 799.9410 TSCA chronic toxicity.

(a) *Scope*—(1) *Applicability*. This section is intended to meet the testing requirement of the Toxic Substances Control Act (TSCA) (15 U.S.C. 2601).

(2) *Source*. The source material used in developing this TSCA test guideline is the Office of Prevention, Pesticides and Toxic Substances (OPPTS) harmonized test guideline 870.4100 (August 1998, final guidelines). This source is available at the address in paragraph (h) of this section

(b) *Purpose*. The objective of a chronic toxicity study is to determine the effects of a substance in a mammalian species following prolonged and repeated exposure. A chronic toxicity study should generate data from which to identify the majority of chronic effects and to define long-term dose-response relationships. The design and conduct of chronic toxicity tests should allow for the detection of general toxic effects, including neurological, physiological, biochemical, and hematological effects and exposure-related morphological (pathological) effects.

(c) *Definitions*. The definitions in section 3 of TSCA and in 40 CFR Part 792—Good Laboratory Practice Standards apply to this section. The following definitions also apply to this section.

Chronic toxicity is the adverse effects occurring as a result of the repeated daily exposure of experimental animals to a chemical by the oral, dermal, or inhalation routes of exposure.

Cumulative toxicity is the adverse effects of repeated doses occurring as a result of prolonged action on, or increased concentration of, the administered test substance or its metabolites in susceptible tissue.

Dose in a chronic toxicity study is the amount of test substance administered daily via the oral, dermal or inhalation routes for a period of at least 12 months. Dose is expressed as weight of the test substance (grams, milligrams) per unit body weight of test animal (milligram per kilogram), or as weight of the test substance in parts per million (ppm) in food or drinking water per day. For inhalation exposure, dose is expressed as weight of the test substance per unit volume of air (milligrams per liter) or as parts per million per day. For dermal exposure, dose is expressed as weight of the test substance (grams, milligrams) per unit

body weight of the test animal (milligrams per kilogram) or as weight of the substance per unit of surface area (milligrams per square centimeter) per day.

No-observed-effects level (NOEL) is the maximum dose used in a study which produces no adverse effects. The NOEL is usually expressed in terms of the weight of a test substance given daily per unit weight of test animal (milligrams per kilogram per day).

Target organ is any organ of a test animal showing evidence of an effect induced by a test substance.

(d) *Limit test*. If a test at one dose level of at least 1,000 mg/kg body weight (expected human exposure may indicate the need for a higher dose level), using the procedures described for this study, produces no observable toxic effects and if toxicity would not be expected based upon data of structurally related compounds, a full study using three dose levels might not be necessary.

(e) *Test procedures*—(1) *Animal selection*—(i) *Species and strain*. Testing should be performed with two mammalian species, one a rodent and the other a nonrodent. The rat is the preferred rodent species. Commonly used laboratory strains must be employed.

(ii) *Age/weight*. (A) Testing must be started with young healthy animals as soon as possible after weaning and acclimatization.

(B) Dosing of rodents should generally begin no later than 8 weeks of age.

(C) Dosing of non-rodents should begin between 4 and 6 months of age and in no case later than 9 months of age.

(D) At commencement of the study, the weight variation of animals used should be within 20% of the mean weight for each sex.

(E) Studies using prenatal or neonatal animals may be recommended under special conditions.

(iii) *Sex*. (A) Equal numbers of animals of each sex should be used at each dose level.

(B) Females should be nulliparous and nonpregnant.

(iv) *Numbers*. (A) For rodents, at least 40 animals (20 males and 20 females) and for nonrodents at least 8 animals (4 females and 4 males) should be used at each dose level and concurrent control group.

(B) If interim sacrifices are planned, the number should be increased by the number of animals scheduled to be sacrificed during the course of the study.

(C) The number of animals at the termination of the study must be adequate for a meaningful and valid statistical evaluation of chronic effects. The Agency must be notified if excessive early deaths or other problems are encountered that might compromise the integrity of the study.

(D) To avoid bias, the use of adequate randomization procedures for the proper allocation of animals to test and control groups is required.

(E) Each animal should be assigned a unique identification number. Dead animals, their preserved organs and tissues, and microscopic slides should be identified by reference to the unique numbers assigned.

(v) *Husbandry*. (A) Rodents may be group-caged by sex, but the number of animals per cage must not interfere with clear observation of each animal. The biological properties of the test substance or toxic effects (e.g., morbidity, excitability) may indicate a need for individual caging. Rodents should be housed individually in dermal studies and during exposure in inhalation studies. Caging should be appropriate to the nonrodent species.

(B) The temperature of the experimental animal rooms should be at 22 ±3 °C.

(C) The relative humidity of the experimental animal rooms should be 50 ±20%.

(D) Where lighting is artificial, the sequence should be 12 hours light/12 hours dark.

(E) Control and test animals should be fed from the same batch and lot. The feed should be analyzed to assure adequacy of nutritional requirements of the species tested and for impurities that might influence the outcome of the test. Animals should be fed and watered ad libitum with food replaced at least weekly.

(F) The study should not be initiated until animals have been allowed a period of acclimatization/quarantine to environmental conditions, nor should

animals from outside sources be placed on test without an adequate period of quarantine. An acclimation period of at least 5 days is recommended.

(2) *Control and test substances.* (i) Where necessary, the test substance is dissolved or suspended in a suitable vehicle. If a vehicle or diluent is needed it should not elicit toxic effects itself nor substantially alter the chemical or toxicological properties of the test substance. It is recommended that wherever possible the use of an aqueous solution be the first choice, followed by consideration of solution in oil, and finally, solution in other vehicles.

(ii) One lot of the test substance should be used, if possible, throughout the duration of the study, and the research sample should be stored under conditions that maintain its purity and stability. Prior to the initiation of the study, there should be a characterization of the test substance, including the purity of the test compound, and, if technically feasible, the names and quantities of contaminants and impurities.

(iii) If the test or control substance is to be incorporated into feed or another vehicle, the period during which the test substance is stable in such a mixture should be determined prior to the initiation of the study. Its homogeneity and concentration should be determined prior to the initiation of the study and periodically during the study. Statistically randomized samples of the mixture should be analyzed to ensure that proper mixing, formulation, and storage procedures are being followed, and that the appropriate concentration of the test or control substance is contained in the mixture.

(3) *Control groups.* A concurrent control group is required. This group should be an untreated or sham-treated control group or, if a vehicle is used in administering the test substance, a vehicle control group. If the toxic properties of the vehicle are not known or cannot be made available, both untreated and vehicle control groups are required.

(4) *Satellite group.* A satellite group of 40 animals (20 animals per sex) for rodents and 8 animals (4 animals per sex) for nonrodents may be treated with the high-dose level for 12 months and observed for reversibility, persistence, or delayed occurrence of toxic effects for a post-treatment of appropriate length, normally not less than 28 days. In addition, a control group of 40 animals (20 animals per sex) for rodents and 8 animals (4 animals per sex) for nonrodents should be added to the satellite study.

(5) *Dose levels and dose selections.* (i) In chronic toxicity tests, it is desirable to determine a dose-response relationship as well as a NOEL. Therefore, at least three dose levels with a control group and, where appropriate, a vehicle control (corresponding to the concentration of the vehicle at the highest exposure level) should be used. Dose levels should be spaced to produce a gradation of effects. A rationale must be provided for the doses selected.

(ii) The highest-dose level should elicit signs of toxicity without substantially altering the normal life span of the animal. The highest dose should be determined based on the findings from a 90-day study to ensure that the dose used is adequate to assess the chronic toxicity of the test substance. Thus, the selection of the highest dose to be tested is dependent upon changes observed in several toxicological parameters in subchronic studies. The highest dose tested need not exceed 1,000 mg/kg/day. If dermal application of the test substance produces severe skin irritation, then it may be necessary either to terminate the study and choose a lower high-dose level or to reduce the dose level. Gross criteria for defining severe irritation would include ulcers, fissures, exudate/crust(eschar), dead tissue, or anything leading to destruction of the functional integrity of the epidermis (e.g. caking, open sores, fissuring, eschar). Histological criteria for defining severe irritation would include follicular and interfollicular crust, microulcer, mild/moderate degeneration/necrosis, moderate/marked epidermal edema, marked dermal edema, and marked inflammation.

(iii) The intermediate dose levels should be spaced to produce a gradation of toxic effects.

(iv) The lowest-dose level should produce no evidence of toxicity.

(6) *Administration of the test substance.* The three main routes of administration are oral, dermal, and inhalation. The choice of the route of administration depends upon the physical and chemical characteristics of the test substance and the form typifying exposure in humans.

(i) *Oral studies.* Ideally, the animals should be dosed by gavage or with capsules on a 7-day per week basis for a period of at least 12 months. However, based primarily on practical considerations, dosing by gavage or capsules on a 5-day per week schedule is acceptable. If the test substance is administered via in the drinking water or mixed in the diet, exposure should be on a 7-day per week basis.

(ii) *Dermal studies.* (A) Preparation of animal skin. Shortly before testing, fur should be clipped from not less than 10% of the body surface area for application of the test substance. In order to dose approximately 10% of the body surface, the area starting at the scapulae (shoulders) to the wing of the ileum (hipbone) and half way down the flank on each side of the animal should be shaved. Shaving should be carried out approximately 24 hours before dosing. Repeated clipping or shaving is usually needed at approximately weekly intervals. When clipping or shaving the fur, care should be taken to avoid abrading the skin which could alter its permeability.

(B) Preparation of test substance. Liquid test substances are generally used undiluted, except as indicated in paragraph (e)(5)(ii) of this section. Solids should be pulverized when possible. The substance should be moistened sufficiently with water or, when necessary, with a suitable vehicle to ensure good contact with the skin. When a vehicle is used, the influence of the vehicle on toxicity of, and penetration of the skin by, the test substance should be taken into account. The volume of application should be kept constant, e.g., less than 100 μL for the mouse and less than 300 μL for the rat. Different concentrations of test solution should be prepared for different dose levels.

(C) Administration of test substance. The duration of exposure should be at least for 12 months. Ideally, the animals should be treated with test substance for at least 6 hours per day on a 7-day per week basis. However, based on practical considerations, application on a 5-day per week basis is acceptable. Dosing should be conducted at approximately the same time each day. The test substance should be applied uniformly over the treatment site. The surface area covered may be less for highly toxic substances. As much of the area should be covered with as thin and uniform a film as possible. For rats, the test substance may be held in contact with the skin with a porous gauze dressing and nonirritating tape if necessary. The test site should be further covered in a suitable manner to retain the gauze dressing plus test substance and to ensure that the animals cannot ingest the test substance. The application site should not be covered when the mouse is the species of choice. The test substance may be wiped from the skin after the six-hour exposure period to prevent ingestion.

(iii) *Inhalation studies.* (A) The animals should be exposed to the test substance for 6 hours per day on a 7-day per week basis, for a period of at least 12 months. However, based primarily on practical considerations, exposure for 6 hours per day on a 5-day per week basis is acceptable.

(B) The animals should be tested in dynamic inhalation equipment designed to sustain a minimum air flow of 10 air changes per hour, an adequate oxygen content of at least 19%, and uniform conditions throughout the exposure chamber. Maintenance of slight negative pressure inside the chamber will prevent leakage of the test substance into surrounding areas. It is not normally necessary to measure chamber oxygen concentration if airflow is adequate.

(C) The selection of a dynamic inhalation chamber should be appropriate for the test substance and test system. When a whole body chamber is used, individual housing must be used to minimize crowding of the test animals and maximize their exposure to the test substance. To ensure stability of a chamber atmosphere, the total volume occupied by the test animals should not exceed 5% of the volume of the test

chamber. It is recommended, but not required, that nose-only or head-only exposure be used for aerosol studies in order to minimize oral exposures due to animals licking compound off their fur. The animals should be acclimated and heat stress minimized.

(D) The temperature at which the test is performed should be maintained at 22 ±2 °C. The relative humidity should be maintained between 40–60%, but in certain instances (e.g., use of water vehicle) this may not be practicable.

(E) The rate of air flow should be monitored continuously but recorded at least three times during the exposure.

(F) Temperature and humidity should be monitored continuously but should be recorded at least every 30 min.

(G) The actual concentrations of the test substance should be measured in the breathing zone. During the exposure period, the actual concentrations of the test substance should be held as constant as practicable, monitored continuously or intermittently depending on the method of analysis. Chamber concentration may be measured using gravimetric or analytical methods, as appropriate. If trial run measurements are reasonably consistent (±10% for liquid aerosol, gas, or vapor; ±20% for dry aerosol), then two measurements should be sufficient. If measurements are not consistent, three to four measurements should be taken. If there is some difficulty measuring chamber analytical concentration due to precipitation, nonhomogeneous mixtures, volatile components, or other factors, additional analysis of inert components may be necessary.

(H) During the development of the generating system, particle size analysis should be performed to establish the stability of aerosol concentrations with respect to particle size. The mass median aerodynamic diameter (MMAD) particle size range should be between 1–3 μm. The particle size of hygroscopic materials should be small enough when dry to assure that the size of the swollen particle will still be within the 1–3 μm range. Measurements of aerodynamic particle size in the animal's breathing zone should be measured during a trial run. If MMAD values for each exposure level are within 10% of each other, then two measurements during the exposures should be sufficient. If pretest measurements are not within 10% of each other, three to four measurements should be taken.

(I) Feed should be withheld during exposure. Water may also be withheld during exposure.

(7) *Observation period.* (i) Animals should be observed for a period of at least 12 months.

(ii) Animals in a satellite group (if used) scheduled for follow-up observations should be kept for at least 28 days further without treatment to detect recovery from, or persistence of, toxic effects.

(8) *Observation of animals.* (i) Observations should be made at least twice each day for morbidity and mortality. Appropriate actions should be taken to minimize loss of animals to the study (e.g., necropsy or refrigeration of those animals found dead and isolation or sacrifice of weak or moribund animals). General clinical observations should be made at least once a day, preferably at the same time each day, taking into consideration the peak period of anticipated effects after dosing. The clinical condition of the animal should be recorded.

(ii) A careful clinical examination should be made at least once prior to the initiation of treatment (to allow for within subject comparisons) and once weekly during treatment in all animals. These observations should be made outside the home cage, preferably in a standard arena, and at similar times on each occasion. Effort should be made to ensure that variations in the observation conditions are minimal. Observations should be detailed and carefully recorded, preferably using scoring systems, explicitly defined by the testing laboratory. Signs noted should include, but not be limited to, changes in skin, fur, eyes, mucous membranes, occurrence of secretions and excretions and autonomic activity (e.g., lacrimation, piloerection, pupil size, unusual respiratory pattern). Changes in gait, posture and response to handling as well as the presence of clonic or tonic movements, stereotypies (e.g., excessive

grooming, repetitive circling) or bizarre behavior (e.g., self-mutilation, walking backwards) should be recorded.

(iii) Once, near the end of the first year of the exposure period and in any case not earlier than in month 11, assessment of motor activity, grip strength, and sensory reactivity to stimuli of different types (e.g., visual, auditory, and proprioceptive stimuli) should be conducted in rodents. Further details of the procedures that could be followed are described in the references listed under paragraphs (h)(2), (h)(7), (h)(8), and (h)(11) of this section.

(iv) Functional observations conducted towards the end of the study may be omitted when data on functional observations are available from other studies and the daily clinical observations did not reveal any functional deficits.

(v) Exceptionally, functional observations may be omitted for groups that otherwise reveal signs of toxicity to an extent that would significantly interfere with functional test performance.

(vi) Body weights should be recorded individually for all animals once prior to the administration of the test substance, once a week during the first 13 weeks of study and at least once every 4 weeks thereafter, unless signs of clinical toxicity suggest more frequent weighing to facilitate monitoring of health status.

(vii) Measurements of feed consumption should be determined weekly during the first 13 weeks of the study and at approximately monthly intervals thereafter unless health status or body weight changes dictate otherwise. Measurements of water consumption should be determined at the same intervals if the test substance is administered in the drinking water.

(viii) Moribund animals should be removed and sacrificed when noticed and the time of death should be recorded as precisely as possible. All survivors should be sacrificed at the end of the study period.

(9) *Clinical pathology*. Hematology, clinical chemistry, and urinalysis should be performed on 10 rats per sex per group, and on all nonrodents. In rodents, the parameters should be examined at approximately 6 month intervals during the conduct of the study and at termination. If possible, these collections should be from the same animals at each interval. In nonrodents, the parameters should be examined once or twice prior to initiation of treatment, at 6-month intervals during the conduct of the study, and at termination. If hematological and biochemical effects were seen in the subchronic study, testing should also be performed at 3 months. Overnight fasting of animals prior to blood sampling is recommended.

(i) *Hematology*. The recommended parameters are red blood cell count, hemoglobin concentration, hematocrit, mean corpuscular volume, mean corpuscular hemoglobin, and mean corpuscular hemoglobin concentration, white blood cell count, differential leukocyte count, platelet count, and a measure of clotting potential, such as prothrombin time or activated partial thromboplastin time.

(ii) *Clinical chemistry*. (A) Parameters which are considered appropriate to all studies are electrolyte balance, carbohydrate metabolism, and liver and kidney function. The selection of specific tests will be influenced by observations on the mode of action of the substance and signs of clinical toxicity.

(B) The recommended clinical chemistry determinations are potassium, sodium, calcium (nonrodent), phosphorus (nonrodent), chloride (nonrodent), glucose, total cholesterol, urea nitrogen, creatinine, total protein, total bilirubin (nonrodent), and albumin. More than two hepatic enzymes, (such as alanine aminotransferase, aspartate aminotransferase, alkaline phosphatase, sorbitol dehydrogenase, or gamma glutamyl transpeptidase) should also be measured. Measurements of additional enzymes (of hepatic or other origin) and bile acids, may also be useful.

(C) If a test chemical has an effect on the hematopoietic system, reticulocyte counts and bone marrow cytology may be indicated.

(D) Other determinations that should be carried out if the test chemical is known or suspected of affecting related measures include calcium, phosphorus,

fasting triglycerides, hormones, methemoglobin, and cholinesterases.

(iii) *Urinalysis*. Urinalysis for rodents should be performed at the end of the study using timed urine collection. Urinalysis for nonrodents should be performed prior to treatment, midway through treatment and at the end of the study using timed urine collection. Urinalysis determinations include: appearance, volume, osmolality or specific gravity, pH, protein, glucose, and blood/blood cells.

(10) *Ophthalmological examination*. Examinations should be made of all animals using an ophthalmoscope or equivalent device prior to the administration of the test substance and at termination of the study on 10 rats of each sex in the high-dose and control groups and preferably in all nonrodents, but at least the control and high-dose groups should be examined. If changes in eyes are detected, all animals should be examined.

(11) *Gross necropsy*. (i) All animals should be subjected to a full gross necropsy which includes examination of the external surface of the body, all orifices, and the cranial, thoracic and abdominal cavities and their contents.

(ii) At least the liver, kidneys, adrenals, testes, epididymides, ovaries, uterus, nonrodent thyroid (with parathyroid), spleen, brain, and heart should be weighed wet as soon as possible after dissection to avoid drying. The lungs should be weighed if the test substance is administered by the inhalation route.

(iii) The following organs and tissues, or representative samples thereof, should be preserved in a suitable medium for possible future histopathological examination:

(A) Digestive system—salivary glands, esophagus, stomach, duodenum, jejunum, ileum, cecum, colon, rectum, liver, pancreas, gallbladder (when present).

(B) Nervous system—brain (multiple sections, including cerebrum, cerebellum and medulla/pons), pituitary, peripheral nerve (sciatic or tibial, preferably in close proximity to the muscle), spinal cord (three levels, cervical, mid-thoracic and lumbar), eyes (retina, optic nerve).

(C) Glandular system—adrenals, parathyroid, thyroid.

(D) Respiratory system—trachea, lungs, pharynx, larynx, nose.

(E) Cardiovascular/hematopoietic system—aorta, heart, bone marrow (and/or fresh aspirate), lymph nodes (preferably one lymph node covering the route of administration and another one distant from the route of administration to cover systemic effects), spleen.

(F) Urogenital system—kidneys, urinary bladder, prostate, testes, epididymides, seminal vesicle(s), uterus, ovaries, female mammary gland.

(G) Other—all gross lesions and masses, skin.

(iv) In inhalation studies, the entire respiratory tract, including nose, pharynx, larynx, and paranasal sinuses should be examined and preserved. In dermal studies, skin from treated and adjacent control skin sites should be examined and preserved.

(v) Inflation of lungs and urinary bladder with a fixative is the optimal method for preservation of these tissues. The proper inflation and fixation of the lungs in inhalation studies is considered essential for appropriate and valid histopathological examination.

(vi) Information from clinical pathology and other in-life data should be considered before microscopic examination, since they may provide significant guidance to the pathologist.

(12) *Histopathology*. (i) The following histopathology should be performed:

(A) Full histopathology on the organs and tissues (listed under paragraph (e)(11)(iii) of this section) of all rodents and nonrodents in the control and high-dose groups, and all rodents and nonrodents that died or were sacrificed during the study. The examination should be extended to all animals in all dosage groups if treatment-related changes are observed in the high-dose group.

(B) All gross lesions in all animals.

(C) Target tissues in all animals.

(ii) If the results show substantial alteration of the animal's normal life span, or other effects that might compromise the significance of the data,

the next lower levels should be examined fully as described in paragraph (e)(12)(i) of this section.

(iii) An attempt should be made to correlate gross observations with microscopic findings.

(iv) Tissues and organs designated for microscopic examination should be fixed in 10% buffered formalin or a recognized suitable fixative as soon as necropsy is performed and no less than 48 hours prior to trimming.

(f) *Data and reporting*—(1) *Treatment of results*. (i) Data should be summarized in tabular form, showing for each test group the number of animals at the start of the test, the number of animals showing lesions, the types of lesions and the percentage of animals displaying each type of lesion.

(ii) When applicable, all observed results (quantitative and qualitative) should be evaluated by an appropriate statistical method. Any generally accepted statistical methods may be used; the statistical methods including significance criteria should be selected during the design of the study.

(2) *Evaluation of study results*. The findings of a chronic toxicity study should be evaluated in conjunction with the findings of preceding studies and considered in terms of the toxic effects as well as the necropsy and histopathological findings. The evaluation will include the relationship between the dose of the test substance and the presence, incidence, and severity of abnormalities (including behavioral and clinical abnormalities), gross lesions, identified target organs, body weight changes, effects on mortality and any other general or specific toxic effects.

(3) *Test report*. In addition to the reporting requirements specified under EPA Good Laboratory Practice Standards at 40 CFR part 792, subpart J, the following specific information must be reported:

(i) Test substance characterization should include:

(A) Chemical identification.

(B) Lot or batch number.

(C) Physical properties.

(D) Purity/impurities.

(ii) Identification and composition of any vehicle used.

(iii) Test system should contain data on:

(A) Species and strain of animals used and rationale for selection if other than that recommended.

(B) Age including body weight data and sex.

(C) Test environment including cage conditions, ambient temperature, humidity, and light/dark periods.

(D) Identification of animal diet.

(E) Acclimation period.

(iv) Test procedure should include the following data:

(A) Method of randomization used.

(B) Full description of experimental design and procedure.

(C) Dose regimen including levels, methods, and volume.

(v) Test results.

(A) Group animal data. Tabulation of toxic response data by species, strain, sex and exposure level for:

(*1*) Number of animals exposed.

(*2*) Number of animals showing signs of toxicity.

(*3*) Number of animals dying.

(B) Individual animal data. Data should be presented as summary (group mean) as well as for individual animals.

(*1*) Time of death during the study or whether animals survived to termination.

(*2*) Time of observation of each abnormal sign and its subsequent course.

(*3*) Body weight data.

(*4*) Feed and water (if collected) consumption data.

(*5*) Achieved dose (mg/kg/day) as a time-weighted average if the test substance is administered in the diet or drinking water.

(*6*) Results of ophthalmological examinations.

(*7*) Results of hematological tests performed.

(*8*) Results of clinical chemistry tests performed.

(*9*) Urinalysis tests performed and results.

(*10*) Results of observations made.

(*11*) Necropsy findings, including absolute and relative (to body weight) organ weight data.

(*12*) Detailed description of all histopathological findings.

(*13*) Statistical treatment of results, where appropriate.

(vi) In addition, for inhalation studies the following should be reported:

(A) Test conditions. The following exposure conditions must be reported:

(*1*) Description of exposure apparatus including design, type, dimensions, source of air, system for generating particulate and aerosols, method of conditioning air, treatment of exhaust air and the method of housing the animals in a test chamber.

(*2*) The equipment for measuring temperature, humidity, and particulate aerosol concentrations and size should be described.

(B) Exposure data. These data should be tabulated and presented with mean values and a measure of variability (e.g., standard deviation) and should include:

(*1*) Airflow rates through the inhalation equipment.

(*2*) Temperature and humidity of air.

(*3*) Actual (analytical or gravimetric) concentration in the breathing zone.

(*4*) Nominal concentration (total amount of test substance fed into the inhalation equipment divided by volume of air).

(*5*) Particle size distribution, calculated MMAD, and geometric standard deviation.

(*6*) Explanation as to why the desired chamber concentration and/or particle size could not be achieved (if applicable) and the efforts taken to comply with this aspect of the guidelines.

(g) *Quality control.* A system should be developed and maintained to assure and document adequate performance of laboratory staff and equipment. The study must be conducted in compliance with 40 CFR Part 792—Good Laboratory Practice Standards.

(h) *References.* For additional background information on this test guideline, the following references should be consulted. These references are available at the addresses in § 700.17(b)(1) and (2) of this chapter.

(1) Benitz, K.F. Measurement of Chronic Toxicity. *Methods of Toxicology*. Ed. G.E. Paget. Blackwell, Oxford. pp. 82–131 (1970).

(2) Crofton K.M., Howard J.L., Moser V.C., Gill M.W., Leiter L.W., Tilson H.A., MacPhail, R.C. Interlaboratory Comparison of Motor Activity Experiments: Implication for Neurotoxicological Assessments. *Neurotoxicol. Teratol.* 13, 599–609. (1991)

(3) D'Aguanno, W. Drug Safety Evaluation–Pre-Clinical Considerations. *Industrial Pharmacology: Neuroleptic.* Vol. I, Ed. S. Fielding and H. Lal. Futura, Mt. Kisco, NY. pp. 317–332 (1974).

(4) Fitzhugh, O.G. Chronic Oral Toxicity, Appraisal of the Safety of Chemicals in Foods, Drugs and Cosmetics. The Association of Food and Drug Officials of the United States. pp. 36–45 (1959, 3rd Printing 1975).

(5) Gad S.C. A Neuromuscular Screen for Use in Industrial Toxicology. *Journal of Toxicology and Environmental Health*. 9, 691–704. (1982)

(6) Goldenthal, E.I. and D'Aguanno, W. Evaluation of Drugs, Appraisal of the Safety of Chemicals in Foods, Drugs, and Cosmetics. The Association of Food and Drug Officials of the United States. pp. 60–67 (1959, 3rd Printing 1975).

(7) Meyer O.A., Tilson H.A., Byrd W.C., Riley M.T. A Method for the Routine Assessment of Fore- and Hind-Limb Grip Strength of Rats and Mice. *Neurobehav. Toxicol.* 1, 233–236. (1979)

(8) Moser V.C., McDaniel K.M., Phillips P.M. Rat Strain and Stock Comparisons using a Functional Observational Battery: Baseline Values and Effects of Amitraz. *Toxicol. Appl. Pharmacol.* 108, 267–283 (1991)

(9) Organization for Economic Cooperation and Development. Guidelines for Testing of Chemicals, Section 4-Health Effects, Part 452 Chronic Toxicity Studies, Paris (1981).

(10) Page, N.P. Chronic Toxicity and Carcinogenicity Guidelines. *Journal of Environmental Pathology and Toxicology*. 11:161–182 (1977).

(11) Tupper, D.E., Wallace R.B. Utility of the Neurologic Examination in Rats. *Acta. Neurobiol. Exp.* 40, 999–1003 (1980).

(12) Weingand K., Brown G., Hall R. et al. (1996). Harmonization of Animal Clinical Pathology Testing in Toxicity and Safety Studies. *Fundam. and Appl. Toxicol.* 29:198–201.

[65 FR 78797, Dec. 15, 2000, as amended at 77 FR 46294, Aug. 3, 2012]

§ 799.9420 TSCA carcinogenicity.

(a) *Scope.* This section is intended to meet the testing requirements under

section 4 of TSCA. The objective of a long-term carcinogenicity study is to observe test animals for a major portion of their life span for development of neoplastic lesions during or after exposure to various doses of a test substance by an appropriate route of administration.

(b) *Source*. The source material used in developing this TSCA test guideline is the OPPTS harmonized test guideline 870.4200 (June 1996 Public Draft). This source is available at the address in paragraph (g) of this section.

(c) *Definitions*. The following definitions apply to this section.

Carcinogenicity is the development of neoplastic lesions as a result of the repeated daily exposure of experimental animals to a chemical by the oral, dermal, or inhalation routes of exposure.

Cumulative toxicity is the adverse effects of repeated dose occurring as a result of prolonged action on, or increased concentration of, the administered test substance or its metabolites in susceptible tissues.

Dose in a carcinogenicity study is the amount of test substance administered via the oral, dermal or inhalation routes for a period of up to 24 months. Dose is expressed as weight of the test substance (grams, milligrams) per unit body weight of test animal (milligram per kilogram), or as weight of the test substance in parts per million (ppm) in food or drinking water. When exposed via inhalation, dose is expressed as weight of the test substance per unit volume of air (milligrams per liter) or as parts per million.

Target organ is any organ of a test animal showing evidence of an effect induced by a test substance.

(d) *Test procedures*—(1) *Animal selection*—(i) *Species and strain*. Testing shall be performed on two mammalian species. Rats and mice are the species of choice because of their relatively short life spans, limited cost of maintenance, widespread use in pharmacological and toxicological studies, susceptibility to tumor induction, and the availability of inbred or sufficiently characterized strains. Commonly used laboratory strains shall be used. If other mammalian species are used, the tester shall provide justification/reasoning for their selection.

(ii) *Age/weight*. (A) Testing shall be started with young healthy animals as soon as possible after weaning and acclimatization.

(B) Dosing should generally begin no later than 8 weeks of age.

(C) At commencement of the study, the weight variation of animals used shall not exceed ±20% of the mean weight for each sex.

(D) Studies using prenatal or neonatal animals may be recommended under special conditions.

(iii) *Sex*. (A) Equal numbers of animals of each sex shall be used at each dose level.

(B) Females shall be nulliparous and nonpregnant.

(iv) *Numbers*. (A) At least 100 rodents (50 males and 50 females) shall be used at each dose level and concurrent control group.

(B) If interim sacrifices are planned, the number shall be increased by the number of animals scheduled to be sacrificed during the course of the study.

(C) For a meaningful and valid statistical evaluation of long term exposure and for a valid interpretation of negative results, the number of animals in any group should not fall below 50% at 15 months in mice and 18 months in rats. Survival in any group should not fall below 25% at 18 months in mice and 24 months in rats.

(D) The use of adequate randomization procedures for the proper allocation of animals to test and control groups is required to avoid bias.

(E) Each animal shall be assigned a unique identification number. Dead animals, their preserved organs and tissues, and microscopic slides shall be identified by reference to the unique numbers assigned.

(v) *Husbandry*. (A) Animals may be group-caged by sex, but the number of animals per cage must not interfere with clear observation of each animal. The biological properties of the test substance or toxic effects (e.g., morbidity, excitability) may indicate a need for individual caging. Animals should be housed individually in dermal studies and during exposure in inhalation studies.

(B) The temperature of the experimental animal rooms should be at 22 ±3 °C.

(C) The relative humidity of the experimental animal rooms should be 30 to 70%.

(D) Where lighting is artificial, the sequence should be 12 h light/12 h dark.

(E) Control and test animals should be fed from the same batch and lot. The feed should be analyzed to assure uniform distribution and adequacy of nutritional requirements of the species tested and for impurities that might influence the outcome of the test. Animals should be fed and watered ad libitum with food replaced at least weekly.

(F) The study should not be initiated until animals have been allowed a period of acclimatization/quarantine to environmental conditions, nor should animals from outside sources be placed on test without an adequate period of quarantine.

(2) *Control and test substances.* (i) Where necessary, the test substance is dissolved or suspended in a suitable vehicle. If a vehicle or diluent is needed, it should not elicit toxic effects itself. It is recommended that wherever possible the use of an aqueous solution be considered first, followed by consideration of solution in oil, and finally solution in other vehicles.

(ii) One lot of the test substance should be used, if possible, throughout the duration of the study, and the research sample should be stored under conditions that maintain its purity and stability. Prior to the initiation of the study, there should be a characterization of the test substance, including the purity of the test compound, and, if possible, the name and quantities of contaminants and impurities.

(iii) If the test or control substance is to be incorporated into feed or another vehicle, the period during which the test substance is stable in such a mixture should be determined prior to the initiation of the study. Its homogeneity and concentration should be determined prior to the initiation of the study and periodically during the study. Statistically randomized samples of the mixture should be analyzed to ensure that proper mixing, formulation, and storage procedures are being followed, and that the appropriate concentration of the test or control substance is contained in the mixture.

(3) *Control groups.* A concurrent control group (50 males and 50 females) is required. This group shall be untreated or if a vehicle is used in administering the test substance, a vehicle control group. If the toxic properties of the vehicle are not known, both untreated and vehicle control groups are required.

(4) *Dose levels and dose selection.* (i) For risk assessment purposes, at least three dose levels shall be used, in addition to the concurrent control group. Dose levels should be spaced to produce a gradation of effects. A rationale for the doses selected must be provided.

(ii) The highest dose level should elicit signs of toxicity without substantially altering the normal life span due to effects other than tumors. The highest dose should be determined based on the findings from a 90–day study to ensure that the dose used is adequate to asses the carcinogenic potential of the test substance. Thus, the selection of the highest dose to be tested is dependent upon changes observed in several toxicological parameters in subchronic studies. The highest dose tested need not exceed 1,000 mg/kg/day.

(iii) The intermediate-dose level should be spaced to produce a gradation of toxic effects.

(iv) The lowest dose level should produce no evidence of toxicity.

(v) For skin carcinogenicity studies, when toxicity to the skin is a determining factor, the highest dose selected should not destroy the functional integrity of the skin, the intermediate dose should be a minimally irritating dose, and the low dose should be the highest nonirritating dose.

(vi) The criteria for selecting the dose levels for skin carcinogenicity studies, based on gross and histopathologic dermal lesions, are as follows:

(A) Gross criteria for reaching the high dose:

(*1*) Erythema (moderate).

(*2*) Scaling.

(*3*) Edema (mild).

(*4*) Alopecia.

(*5*) Thickening.

(B) Histologic criteria for reaching the high dose:

(*1*) Epidermal hyperplasia.

(*2*) Epidermal hyperkeratosis.

(*3*) Epidermal parakeratosis.

(*4*) Adnexal atrophy/hyperplasia.

(*5*) Fibrosis.

(*6*) Spongiosis (minimal-mild).

(*7*) Epidermal edema (minimal-mild).

(*8*) Dermal edema (minimal-moderate).

(*9*) Inflammation (moderate).

(C) Gross criteria for exceeding the high dose:

(*1*) Ulcers, fissures.

(*2*) Exudate/crust (eschar).

(*3*) nonviable (dead) tissues.

(*4*) Anything leading to destruction of the functional integrity of the epidermis (e.g., caking, fissuring, open sores, eschar).

(D) Histologic criteria for exceeding the high dose:

(*1*) Crust (interfollicular and follicular).

(*2*) Microulcer.

(*3*) Degeneration/necrosis (mild to moderate).

(*4*) Epidermal edema (moderate to marked).

(*5*) Dermal edema (marked).

(*6*) Inflammation (marked).

(5) *Administration of the test substance.* The three main routes of administration are oral, dermal, and inhalation. The choice of the route of administration depends upon the physical and chemical characteristics of the test substance and the form typifying exposure in humans.

(i) *Oral studies.* If the test substance is administered by gavage, the animals are dosed with the test substance on a 7–day per week basis for a period of at least 18 months for mice and hamsters and 24 months for rats. However, based primarily on practical considerations, dosing by gavage or via a capsule on a 5–day per week basis is acceptable. If the test substance is administered in the drinking water or mixed in the diet, then exposure should be on a 7–day per week basis.

(ii) *Dermal studies.* (A) The animals should be treated with the test substance for at least 6 h/day on a 7–day per week basis for a period of at least 18 months for mice and hamsters and 24 months for rats. However, based primarily on practical considerations, application on a 5–day per week basis is acceptable. Dosing should be conducted at approximately the same time each day.

(B) Fur should be clipped weekly from the dorsal area of the trunk of the test animals. Care should be taken to avoid abrading the skin which could alter its permeability. A minimum of 24 hrs should be allowed for the skin to recover before the next dosing of the animal.

(C) Preparation of test substance. Liquid test substances are generally used undiluted, except as indicated in paragraph (e)(4)(vi) of this section. Solids should be pulverized when possible. The substance should be moistened sufficiently with water or, when necessary, with a suitable vehicle to ensure good contact with the skin. When a vehicle is used, the influence of the vehicle on toxicity of, and penetration of the skin by, the test substance should be taken into account. The volume of application should be kept constant, e.g. less than 100 uL for the mouse and less than 300 uL for the rat. Different concentrations of test solution should be prepared for different dose levels.

(D) The test substance shall be applied uniformly over a shaved area which is approximately 10 percent of the total body surface area. In order to dose approximately 10 percent of the body surface, the area starting at the scapulae (shoulders) to the wing of the ileum (hipbone) and half way down the flank on each side of the animal should be shaved. With highly toxic substances, the surface area covered may be less, but as much of the area as possible should be covered with as thin and uniform a film as practical.

(iii) *Inhalation studies.* (A) The animals should be exposed to the test substance for 6 h/day on a 7–day per week basis, for a period of at least 18 months in mice and 24 months in rats. However, based primarily on practical considerations, exposure for 6 h/day on a 5–day per week basis is acceptable.

(B) The animals shall be tested in dynamic inhalation equipment designed to sustain a minimum air flow of 10 air changes per hr, an adequate oxygen content of at least 19%, and uniform conditions throughout the exposure chamber. Maintenance of slight negative pressure inside the chamber will

prevent leakage of the test substance into surrounding areas.

(C) The selection of a dynamic inhalation chamber should be appropriate for the test substance and test system. Where a whole body chamber is used to expose animals to an aerosol, individual housing must be used to minimize crowding of the test animals and maximize their exposure to the test substance. To ensure stability of a chamber atmosphere, the total volume occupied by the test animals shall not exceed 5% of the volume of the test chamber. It is recommended, but not required, that nose-only or head-only exposure be used for aerosol studies in order to minimize oral exposures due to animals licking compound off their fur. Heat stress to the animals should be minimized.

(D) The temperature at which the test is performed should be maintained at 22 ±2 °C. The relative humidity should be maintained between 40 to 60%, but in certain instances (e.g., tests of aerosols, use of water vehicle) this may not be practicable.

(E) The rate of air flow shall be monitored continuously but recorded at least three times during exposure.

(F) Temperature and humidity shall be monitored continuously but should be recorded at least every 30 minutes.

(G) The actual concentration of the test substance shall be measured in the breathing zone. During the exposure period, the actual concentrations of the test substance should be held as constant as practicable, monitored continuously or intermittently depending on the method of analysis. Chamber concentrations may be measured using gravimetric or analytical methods as appropriate. If trial run measurements are reasonably consistent (plus or minus 10 percent for liquid aerosol, gas, or vapor; plus or minus 20 percent for dry aerosol), the two measurements should be sufficient. If measurements are not consistent, then three to four measurements should be taken.

(H) During the development of the generating system, particle size analysis shall be performed to establish the stability of aerosol concentrations with respect to particle size. Measurement of aerodynamic particle size in the animals's breathing zone should be measured during a trial run. If median aerodynamic diameter (MMAD) values for each exposure level are within 10% of each other, then two measurements during the exposures should be sufficient. If pretest measurements are not within 10% of each other, three to four measurements should be taken. The MMAD particle size range should be between 1–3 μm. The particle size of hygroscopic materials should be small enough to allow pulmonary deposition once the particles swell in the moist environment of the respiratory tract.

(I) Feed shall be withheld during exposure. Water may also be withheld during exposure.

(6) *Observation period*. It is necessary that the duration of the carcinogenicity study comprise the majority of the normal life span of the strain of animals used. This time period shall not be less than 24 months for rats and 18 months for mice, and ordinarily not longer than 30 months for rats and 24 months for mice. For longer time periods, and where any other species are used, consultation with the Agency in regard to the duration of the study is advised.

(7) *Observation of animals*. (i) Observations shall be made at least once each day for morbidity and mortality. Appropriate actions should be taken to minimize loss of animals from the study (e.g., necropsy or refrigeration of those animals found dead and isolation or sacrifice of weak or moribund animals).

(ii) A careful clinical examination shall be made at least once weekly. Observations should be detailed and carefully recorded, preferably using explicitly defined scales. Observations should include, but not be limited to, evaluation of skin and fur, eyes and mucous membranes, respiratory and circulatory effects, autonomic effects such as salivation, central nervous system effects, including tremors and convulsions, changes in the level of activity, gait and posture, reactivity to handling or sensory stimuli, altered strength and stereotypes or bizarre behavior (e.g., self-mutilation, walking backwards).

(iii) Body weights shall be recorded individually for all animals; once a

week during the first 13 weeks of the study and at least once every 4 weeks, thereafter, unless signs of clinical toxicity suggest more frequent weighing to facilitate monitoring of health status.

(iv) Measurements of feed consumption should be determined weekly during the first 13 weeks of the study and at approximately monthly intervals thereafter unless health status or body weight changes dictate otherwise. Measurement of water consumption should be determined at the same intervals if the test substance is administered in the drinking water.

(v) Moribund animals shall be removed and sacrificed when noticed and the time of death should be recorded as precisely as possible. At the end of the study period, all survivors shall be sacrificed.

(8) *Clinical pathology*. At 12 months, 18 months, and at terminal sacrifice, a blood smear shall be obtained from all animals. A differential blood count should be performed on blood smears from those animals in the highest dosage group and the controls from the terminal sacrifice. If these data, or data from the pathological examination indicate a need, then the 12– and 18–month blood smears should also be examined. Differential blood counts should be performed for the next lower groups if there is a major discrepancy between the highest group and the controls. If clinical observations suggest a deterioration in health of the animals during the study, a differential blood count of the affected animals shall be performed.

(9) *Gross necropsy*. (i) A complete gross examination shall be performed on all animals, including those that died during the experiment or were killed in a moribund condition.

(ii) At least the liver, kidneys, adrenals, testes, epididymides, ovaries, uterus, spleen, brain, and heart should be weighed wet as soon as possible after dissection to avoid drying. The lungs should be weighed if the test substance is administered by the inhalation route. The organs should be weighed from interim sacrifice animals as well as from at least 10 animals per sex per group at terminal sacrifice.

(iii) The following organs and tissues, or representative samples thereof, shall be preserved in a suitable medium for possible future histopathological examination.

(A) Digestive system.
(*1*) Salivary glands.
(*2*) Esophagus.
(*3*) Stomach.
(*4*) Duodenum.
(*5*) Jejunum.
(*6*) Ileum.
(*7*) Cecum.
(*8*) Colon.
(*9*) Rectum.
(*10*) Liver.
(*11*) Pancreas.
(*12*) Gallbladder (mice).
(B) Nervous system.
(*1*) Brain (multiple sections).
(*2*) Pituitary.
(*3*) Peripheral nerves.
(*4*) Spinal cord (three levels).
(*5*) Eyes (retina, optic nerve).
(C) Glandular system.
(*1*) Adrenals.
(*2*) Parathyroids.
(*3*) Thyroids.
(D) Respiratory system.
(*1*) Trachea.
(*2*) Lung.
(*3*) Pharynx.
(*4*) Larynx.
(*5*) Nose.
(E) Cardiovascular/hematopoietic system.
(*1*) Aorta (thoracic).
(*2*) Heart.
(*3*) Bone marrow.
(*4*) Lymph nodes.
(*5*) Spleen.
(F) Urogenital system.
(*1*) Kidneys.
(*2*) Urinary bladder.
(*3*) Prostate.
(*4*) Testes/epididymides.
(*5*) Seminal vesicles.
(*6*) Uterus.
(*7*) Ovaries.
(*8*) Female mammary gland.
(G) Other.
(*1*) Skin.
(*2*) All gross lesions and masses.

(iv) In inhalation studies, the entire respiratory tract, including nose, pharynx, larynx, and paranasal sinuses should be examined and preserved. In dermal studies, skin from treated and adjacent control skin sites should be examined and preserved.

(v) Inflation of lungs and urinary bladder with a fixative is the optimal method for preservation of these tissues. The proper inflation and fixation of the lungs in inhalation studies is essential for appropriate and valid histopathological examination.

(vi) Information from clinical pathology, and other in-life data should be considered before microscopic examination, since they may provide significant guidance to the pathologist.

(10) *Histopathology*. (i) The following histopathology shall be performed:

(A) Full histopathology on the organs and tissues under paragraph (d)(9)(iii) of this section of all animals in the control and high dose groups and all animals that died or were killed during the study.

(B) All gross lesions in all animals.

(C) Target organs in all animals.

(ii) If the results show substantial alteration of the animal's normal life span, the induction of effects that might affect a neoplastic response, or other effects that might compromise the significance of the data, the next lower dose levels shall be examined as described in paragraph (d)(10)(i) of this section.

(iii) An attempt should be made to correlate gross observations with microscopic findings.

(iv) Tissues and organs designated for microscopic examination should be fixed in 10 percent buffered formalin or a recognized suitable fixative as soon as necropsy is performed and no less than 48 hours prior to trimming.

(e) *Data and reporting*—(1) *Treatment of results*. (i) Data shall be summarized in tabular form, showing for each test group the number of animals at the start of the test, the number of animals showing lesions, the types of lesions, and the percentage of animals displaying each type of lesion.

(ii) All observed results (quantitative and qualitative) shall be evaluated by an appropriate statistical method. Any generally accepted statistical methods may be used; the statistical methods including significance criteria shall be selected during the design of the study.

(2) *Evaluation of study results*. (i) The findings of a carcinogenicity study should be evaluated in conjunction with the findings of previous studies and considered in terms of the toxic effects, the necropsy and histopathological findings. The evaluation shall include the relationship between the dose of the test substance and the presence, incidence, and severity of abnormalities (including behavioral and clinical abnormalities), gross lesions, identified target organs, body weight changes, effects on mortality, and any other general or specific toxic effects.

(ii) In any study which demonstrates an absence of toxic effects, further investigation to establish absorption and bioavailablity of the test substance should be considered.

(iii) In order for a negative test to be acceptable, it must meet the following criteria: No more than 10% of any group is lost due to autolysis, cannibalism, or management problems; and survival in each group is no less than 50% at 15 months for mice and 18 months for rats. Survival should not fall below 25% at 18 months for mice and 24 months for rats.

(iv) The use of historical control data from an appropriate time period from the same testing laboratory (i.e., the incidence of tumors and other suspect lesions normally occurring under the same laboratory conditions and in the same strain of animals employed in the test) is helpful for assessing the significance of changes observed in the current study.

(3) *Test report*. (i) In addition to the reporting requirements as specified under 40 CFR part 792, subpart J, the following specific information shall be reported. Both individual and summary data should be presented.

(A) Test substance characterization should include:

(*1*) Chemical identification.

(*2*) Lot or batch number.

(*3*) Physical properties.

(*4*) Purity/impurities.

(*5*) Identification and composition of any vehicle used.

(B) Test system should contain data on:

(*1*) Species and strain of animals used and rationale for selection if other than that recommended.

(*2*) Age including body weight data and sex.

(*3*) Test environment including cage conditions, ambient temperature, humidity, and light/dark periods.

(*4*) Identification of animal diet.

(*5*) Acclimation period.

(C) Test procedure should include the following data:

(*1*) Method of randomization used.

(*2*) Full description of experimental design and procedure.

(*3*) Dose regimen including levels, methods, and volume.

(4) *Test results*—(i) *Group animal data.* Tabulation of toxic response data by species, strain, sex, and exposure level for:

(A) Number of animals exposed.

(B) Number of animals showing signs of toxicity.

(C) Number of animals dying.

(ii) *Individual animal data.* Data should be presented as summary (group mean) as well as for individual animals.

(A) Time of death during the study or whether animals survived to termination.

(B) Time of observation of each abnormal sign and its subsequent course.

(C) Body weight data.

(D) Feed and water consumption data, when collected.

(E) Results of clinical pathology and immunotoxicity screen when performed.

(F) Necropsy findings including absolute/relative organ weight data.

(G) Detailed description of all histopathological findings.

(H) Statistical treatment of results where appropriate.

(I) Historical control data.

(J) Achieved dose (mg/kg/day) as a time-weighted average if the test substance is administered in the diet or drinking water.

(iii) *Inhalation studies.* In addition, for inhalation studies the following shall be reported:

(A) *Test conditions.* The following exposure conditions shall be reported.

(*1*) Description of exposure apparatus including design, type, dimensions, source of air, system for generating particulate and aerosols, method of conditioning air, treatment of exhaust air and the method of housing the animals in a test chamber.

(*2*) The equipment for measuring temperature, humidity, and particulate aerosol concentrations and size should be described.

(B) *Exposure data.* These shall be tabulated and presented with mean values and a measure of variability (e.g. standard deviation) and should include:

(*1*) Airflow rates through the inhalation equipment.

(*2*) Temperature and humidity of air.

(*3*) Actual (analytical or gravimetric) concentration in the breathing zone.

(*4*) Nominal concentration (total amount of test substance fed into the inhalation equipment divided by volume of air).

(*5*) Particle size distribution, calculated MMAD and geometric standard deviation (GSD).

(*6*) Explanation as to why the desired chamber concentration and/or particle size could not be achieved (if applicable) and the efforts taken to comply with this aspect of the sections.

(f) *Quality assurance.* A system shall be developed and maintained to assure and document adequate performance of laboratory staff and equipment. The study shall be conducted in compliance with 40 CFR part 792—Good Laboratory Practice Standards.

(g) *References.* For additional background information on this test guideline, the following references should be consulted. These references are available at the addresses in § 700.17(b)(1) and (2) of this chapter.

(1) Benitz, K.F. Ed. Paget, G.E. Measurement of Chronic Toxicity. *Methods of Toxicology* (Blackwell, Oxford, 1970) pp. 82–131.

(2) Fitzhugh, O.G. Chronic Oral Toxicity, Appraisal of the Safety of Chemicals in Foods, Drugs and Cosmetics. The Association of Food and Drug Officials of the United States. pp. 36–45 (1959, 3rd Printing 1975).

(3) Goldenthal, E.I. and D'Aguanno, W. Evaluation of Drugs, Appraisal of the Safety of Chemicals in Foods, Drugs, and Cosmetics. The Association of Food and Drug Officials of the United States. pp. 60–67 (1959, 3rd Printing 1975).

(4) Organisation for Economic Co-operation and Development. Guidelines for Testing of Chemicals, Section 4–

Health Effects, Part 451 Carcinogenicity Studies (Paris, 1981).

(5) Page, N.P. Chronic Toxicity and Carcinogenicity Guidelines. *Journal of Environmental Pathology and Toxicology*. 11:161–182 (1977).

(6) Page, N.P. Eds. Kraybill and Mehlman. Concepts of a Bioassay Program in Environmental Carcinogenesis. Vol.3. *Advances in Modern Toxicology* (Hemisphere, Washington, DC., 1977) pp. 87–171.

(7) Sontag, J.M. *et al*. Guidelines for Carcinogen Bioassay in Small Rodents. NCI-CS-TR-1 United States Cancer Institute, Division of Cancer Control and Prevention, Carcinogenesis Bioassay Program (Bethesda, MD).

[62 FR 43824, Aug. 15, 1997, as amended at 64 FR 35078, June 30, 1999; 77 FR 46294, Aug. 3, 2012]

§ 799.9430 TSCA combined chronic toxicity/carcinogenicity.

(a) *Scope*. This section is intended to meet the testing requirements under section 4 of the Toxic Substances Control Act (TSCA). The objective of a combined chronic toxicity/carcinogenicity study is to determine the effects of a substance in a mammalian species following prolonged and repeated exposure. The application of this section should generate data which identify the majority of chronic and carcinogenicity effects and determine dose-response relationships. The design and conduct should allow for the detection of neoplastic effects and a determination of the carcinogenic potential as well as general toxicity, including neurological, physiological, biochemical, and hematological effects and exposure-related morphological (pathology) effects.

(b) *Source*. The source material used in developing this TSCA test guideline is the Office of Prevention, Pesticides, and Toxic Substances (OPPTS) harmonized test guideline 870.4300 (August 1998, final guideline). This source is available at the address in paragraph (h) of this section.

(c) *Definitions*. The following definitions apply to this section.

Carcinogenicity is the development of neoplastic lesions as a result of the repeated daily exposure of experimental animals to a chemical by the oral, dermal, or inhalation routes of exposure.

Chronic toxicity is the adverse effects occurring as a result of the repeated daily exposure of experimental animals to a chemical by the oral, dermal, or inhalation routes of exposure.

Cumulative toxicity is the adverse effects of repeated dose occurring as a result of prolonged action on, or increased concentration of, the administered test substance or its metabolites in susceptible tissues.

Dose in a combined chronic toxicity/carcinogenicity study is the amount of test substance administered via the oral, dermal, or inhalation routes for a period of up to 24 months. Dose is expressed as weight of the test substance per unit body weight of test animal (milligrams per kilogram), or as weight of the test substance in parts per million (ppm) in food or drinking water. When exposed via inhalation, dose is expressed as weight of the test substance per unit volume of air (milligrams per liter) or as parts per million per day. For dermal application, dose is expressed as weight of the test substance (grams, milligrams) per unit body weight of the test animal (milligrams per kilogram) or as weight of the substance per unit surface area (milligrams per square centimeter) per day.

No-observed-effects level (NOEL) is the maximum dose used in a study which produces no observed adverse effects. The NOEL is usually expressed in terms of the weight of a test substance given daily per unit weight of test animal (milligrams per kilogram per day).

Target organ is any organ of a test animal showing evidence of an effect induced by a test substance.

(d) *Limit test*. If a test at one dose level of at least 1,000 mg/kg body weight (expected human exposure may indicate the need for a higher dose level), using the procedures described for this study, produces no observable toxic effects or if toxic effects would not be expected based upon data of structurally related compounds, then a full study using three dose levels might not be necessary.

(e) *Test procedures*—(1) *Animal selection*—(i) *Species and strain*. Preliminary

studies providing data on acute, subchronic, and metabolic responses should have been carried out to permit an appropriate choice of animals (species and strain). As discussed in other guidelines, the mouse and rat have been most widely used for assessment of carcinogenic potential, while the rat and dog have been most often studied for chronic toxicity. For the combined chronic toxicity/carcinogenicity study via the oral and inhalation routes, the rat is the species of choice and for the dermal route, the mouse is species of choice. If other species are used, the tester must provide justification/reasoning for their selection. The strain selected should be susceptible to the carcinogenic or toxic effect of the class of substances being tested, if known, and provided it does not have a spontaneous background incidence too high for meaningful assessment. Commonly used laboratory strains must be employed.

(ii) *Age/weight*. (A) Testing must be started with young healthy animals as soon as possible after weaning and acclimatization.

(B) Dosing should generally begin no later than 8 weeks of age.

(C) At commencement of the study, the weight variation of animals used must be within 20% of the mean weight for each sex.

(D) Studies using prenatal or neonatal animals may be recommended under special conditions.

(iii) *Sex*. (A) Equal numbers of animals of each sex must be used at each dose level.

(B) Females must be nulliparous and nonpregnant.

(iv) *Numbers*. (A) At least 100 rodents (50 males and 50 females) must be used at each dose level and concurrent control group. At least 20 additional rodents (10 males and 10 females) should be used for satellite dose groups and the satellite control group. The purpose of the satellite group is to allow for the evaluation of chronic toxicity after 12 months of exposure to the test substance.

(B) For a meaningful and valid statistical evaluation of long term exposure and for a valid interpretation of negative results, the number of animals in any group should not fall below 50% at 15 months in mice and 18 months in rats. Survival in any group should not fall below 25% at 18 months in mice and 24 months in rats.

(C) To avoid bias, the use of adequate randomization procedures for the proper allocation of animals to test and control groups is required.

(D) Each animal must be assigned a unique identification number. Dead animals (and their preserved organs) and tissues, and microscopic slides shall be identified by reference to the unique numbers assigned.

(v) *Husbandry*. (A) Animals may be group-caged by sex, but the number of animals per cage must not interfere with clear observation of each animal. The biological properties of the test substance or toxic effects (e.g., morbidity, excitability) may indicate a need for individual caging. Rodents should be housed individually in dermal studies and during exposure in inhalation studies.

(B) The temperature of the experimental animal rooms should be at 22 ±3 °C.

(C) The relative humidity of the experimental animal rooms should be 50 ±20%.

(D) Where lighting is artificial, the sequence should be 12 hours light/12 hours dark.

(E) Control and test animals should be fed from the same batch and lot. The feed should be analyzed to assure uniform distribution and adequacy of nutritional requirements of the species tested and for impurities that might influence the outcome of the test. Animals should be fed and watered ad libitum with food replaced at least weekly.

(F) The study should not be initiated until animals have been allowed a period of acclimatization/quarantine to environmental conditions, nor should animals from outside sources be placed on test without an adequate period of quarantine. An acclimation period of at least five days is recommended.

(2) *Control and test substances*. (i) Where necessary, the test substance is dissolved or suspended in a suitable vehicle. If a vehicle or diluent is needed, it should not elicit toxic effects itself nor substantially alter the chemical or

toxicological properties of the test substance. It is recommended that wherever possible the usage of an aqueous solution be considered first, followed by consideration of a solution in oil, and finally solution in other vehicles.

(ii) One lot of the test substance should be used throughout the duration of the study if possible, and the research sample should be stored under conditions that maintain its purity and stability. Prior to the initiation of the study, there should be a characterization of the test substance, including the purity of the test compound, and, if possible, the name and quantities of contaminants and impurities.

(iii) If the test or control substance is to be incorporated into feed or another vehicle, the period during which the test substance is stable in such a mixture should be determined prior to the initiation of the study. Its homogeneity and concentration should be determined prior to the initiation of the study and periodically during the study. Statistically randomized samples of the mixture should be analyzed to ensure that proper mixing, formulation, and storage procedures are being followed, and that the appropriate concentration of the test or control substance is contained in the mixture.

(3) *Control groups.* A concurrent control group is required. This group should be an untreated or sham-treated control group or, if a vehicle is used in administering the test substance, a vehicle control group. If the toxic properties of the vehicle are not known or cannot be made available, both untreated and vehicle control groups are required.

(4) *Dose levels and dose selection.* (i) For risk assessment purposes, at least three dose levels must be used, in addition to the concurrent control group. Dose levels should be spaced to produce a gradation of effects. A rationale for the doses selected must be provided.

(ii) The highest dose level in rodents should elicit signs of toxicity without substantially altering the normal life span due to effects other than tumors. The highest dose should be determined based on the findings from a 90–day study to ensure that the dose used is adequate to assess the chronic toxicity and the carcinogenic potential of the test substance. Thus, the selection of the highest dose to be tested is dependent upon changes observed in several toxicological parameters in subchronic studies. The highest dose tested need not exceed 1,000 mg/kg/day.

(iii) The intermediate-dose levels should be spaced to produce a gradation of toxic effects.

(iv) The lowest-dose level should produce no evidence of toxicity.

(v) For skin carcinogenicity studies, when toxicity to the skin is a determining factor, the highest dose selected should not destroy the functional integrity of the skin, the intermediate doses should be a minimally irritating dose and the low dose should be the highest nonirritating dose.

(vi) The criteria for selecting the dose levels for skin carcinogenicity studies, based on gross and histopathologic dermal lesions, are as follows:

(A) Gross criteria for reaching the high dose:

(*1*) Erythema (moderate).

(*2*) Scaling.

(*3*) Edema (mild).

(*4*) Alopecia.

(*5*) Thickening.

(B) Histologic criteria for reaching the high dose:

(*1*) Epidermal hyperplasia.

(*2*) Epidermal hyperkeratosis.

(*3*) Epidermal parakeratosis.

(*4*) Adnexal atrophy/hyperplasia.

(*5*) Fibrosis.

(*6*) Spongiosis (minimal-mild).

(*7*) Epidermal edema (minimal-mild).

(*8*) Dermal edema (minimal-moderate).

(*9*) Inflammation (moderate).

(C) Gross criteria for exceeding the high dose:

(*1*) Ulcers-fissures, exudate/crust (eschar), nonviable (dead) tissues.

(*2*) Anything leading to destruction of the functional integrity of the epidermis (e.g., caking, fissuring, open sores, eschar).

(D) Histologic criteria for exceeding the high-dose:

(*1*) Crust (interfollicular and follicular).

(*2*) Microulcer.

(*3*) Degeneration/necrosis (mild to moderate).

(*4*) Epidermal edema (moderate to marked).

(*5*) Dermal edema (marked).

(*6*) Inflammation (marked).

(5) *Administration of the test substance.* The three main routes of administration are oral, dermal, and inhalation. The choice of the route of administration depends upon the physical and chemical characteristics of the test substance and the form typifying exposure in humans.

(i) *Oral studies.* If the test substance is administered by gavage, the animals are dosed with the test substance on a 7–day per week basis for a period of at least 18 months for mice and hamsters and 24 months for rats. However, based primarily on practical considerations, dosing by gavage on a 5–day per week basis is acceptable. If the test substance is administered in the drinking water or mixed in the diet, then exposure should be on a 7–day per week basis.

(ii) *Dermal studies.* (A) Preparation of animal skin. Shortly before testing, fur should be clipped from not less than 10% of the body surface area for application of the test substance. In order to dose approximately 10% of the body surface, the area starting at the scapulae (shoulders) to the wing of the ileum (hipbone) and half way down the flank on each side of the animal should be shaved. Shaving should be carried out approximately 24 hours before dosing. Repeated clipping or shaving is usually needed at approximately weekly intervals. When clipping or shaving the fur, care should be taken to avoid abrading the skin which could alter its permeability.

(B) Preparation of test substance. Liquid test substances are generally used undiluted, except as indicated in paragraph (e)(4)(vi) of this section. Solids should be pulverized when possible. The substance should be moistened sufficiently with water or, when necessary, with a suitable vehicle to ensure good contact with the skin. When a vehicle is used, the influence of the vehicle on toxicity of, and penetration of the skin by, the test substance should be taken into account. The volume of application should be kept constant, e.g., less than 100 μL for the mouse and less than 300 μL for the rat. Different concentrations of test solution should be prepared for different dose levels.

(C) Administration of test substance. The duration of exposure should be at least 18 months for mice and hamsters and 24 months for rats. Ideally, the animals should be treated with test substance for at least 6 hours per day on a 7-day per week basis. However, based on practical considerations, application on a 5-day per week basis is acceptable. Dosing should be conducted at approximately the same time each day. The test substance must be applied uniformly over the treatment site. The surface area covered may be less for highly toxic substances. As much of the area should be covered with as thin and uniform a film as possible. For rats, the test substance may be held in contact with the skin with a porous gauze dressing and nonirritating tape if necessary. The test site should be further covered in a suitable manner to retain the gauze dressing plus test substance and to ensure that the animals cannot ingest the test substance. The application site should not be covered when the mouse is the species of choice. The test substance may be wiped from the skin after the 6-hour exposure period to prevent ingestion.

(iii) *Inhalation studies.* (A) The animals should be exposed to the test substance, for 6 hours per day on a 7–day per week basis, for a period of at least 18 months in mice and 24 months in rats. However, based primarily on practical considerations, exposure for 6 hours per day on a 5–day per week basis is acceptable.

(B) The animals must be tested in dynamic inhalation equipment designed to sustain a minimum air flow of 10 air changes per hour, an adequate oxygen content of at least 19%, and uniform conditions throughout the exposure chamber. Maintenance of slight negative pressure inside the chamber will prevent leakage of the test substance into surrounding areas. It is not normally necessary to measure chamber oxygen concentration if airflow is adequate.

(C) The selection of a dynamic inhalation chamber should be appropriate for the test substance and test system. Where a whole body chamber is used,

individual housing must be used to minimize crowding of the test animals and maximize their exposure to the test substance. To ensure stability of a chamber atmosphere, the total volume occupied by the test animals shall not exceed 5% of the volume of the test chamber. It is recommended, but not required, that nose-only or head-only exposure be used for aerosol studies in order to minimize oral exposures due to animals licking compound off their fur. The animals should be acclimated and heat stress minimized.

(D) The temperature at which the test is performed should be maintained at 22 ±2 °C. The relative humidity should be maintained between 40 to 60%, but in certain instances (e.g., tests of aerosols, use of water vehicle) this may not be practicable.

(E) The rate of air flow must be monitored continuously but recorded at least three times during the exposure.

(F) Temperature and humidity must be monitored continuously but should be recorded at least every 30 minutes.

(G) The actual concentrations of the test substance must be measured in the animal's breathing zone. During the exposure period, the actual concentrations of the test substance must be held as constant as practicable and monitored continuously or intermittently depending on the method of analysis. Chamber concentration may be measured using gravimetric or analytical methods as appropriate. If trial run measurements are reasonably consistent (±10% for liquid aerosol, gas, or vapor; ±20% for dry aerosol), then two measurements should be sufficient. If measurements are not consistent, three to four measurements should be taken. If there is some difficulty in measuring chamber analytical concentration due to precipitation, nonhomogeneous mixtures, volatile components, or other factors, additional analyses of inert components may be necessary.

(H) During the development of the generating system, particle size analysis must be performed to establish the stability of aerosol concentrations with respect to particle size. The mass median aerodynamic diameter (MMAD) particle size range should be between 1–3 μm. The particle size of hygroscopic materials should be small enough when dry to assure that the size of the swollen particle will still be within the 1–3 μm range. Measurements of aerodynamic particle size in the animal's breathing zone should be measured during a trial run. If MMAD values for each exposure level are within 10% of each other, then two measurements during the exposures should be sufficient. If pretest measurements are not within 10% of each other, three to four measurements should be taken.

(I) Feed must be withheld during exposure. Water may also be withheld during exposure.

(J) When the physical and chemical properties of the test substance show a low flash point or the test substance is otherwise known or thought to be explosive, care must be taken to avoid exposure level concentrations that could result in an exposure chamber explosion during the test.

(6) *Observation period.* (i) This time period must not be less than 24 months for rats and 18 months for mice, and ordinarily not longer than 30 months for rats and 24 months for mice. For longer time periods, and where any other species are used, consultation with the Agency in regard to the duration of the study is advised.

(ii) Animals in a satellite group to assess chronic toxicity should be observed for 12 months.

(7) *Observation of animals.* (i) Observations must be made at least twice each day for morbidity and mortality. Appropriate actions should be taken to minimize loss of animals to the study (e.g., necropsy or refrigeration of those animals found dead and isolation or sacrifice of weak or moribund animals). General clinical observations shall be made at least once a day, preferably at the same time each day, taking into consideration the peak period of anticipated effects after dosing. The clinical condition of the animal should be recorded.

(ii) A careful clinical examination must be made at least once weekly. Observations should be detailed and carefully recorded, preferably using explicity defined scales. Observations should include, but not be limited to, evaluation of skin and fur, eyes and mucous membranes, respiratory and

circulatory effects, autonomic effects such as salivation, central nervous system effects, including tremors and convulsions, changes in the level of activity, gait and posture, reactivity to handling or sensory stimuli, altered strength, and stereotypes or bizarre behavior (e.g., self-mutilation, walking backwards).

(iii) Signs of toxicity should be recorded as they are observed including the time of onset, degree and duration.

(iv) Body weights must be recorded individually for all animals once prior to administration of the test substance, once a week during the first 13 weeks of the study and at least once every 4 weeks thereafter unless signs of clinical toxicity suggest more frequent weighing to facilitate monitoring of health status.

(v) Measurements of feed consumption should be determined weekly during the first 13 weeks of the study and then at approximately monthly intervals unless health status or body weight changes dictate otherwise. Measurements of water consumption should be determined at the same intervals if the test material is administered in drinking water.

(vi) Moribund animals must be removed and sacrificed when noticed and the time of death should be recorded as precisely as possible. At the end of the study period, all survivors must be sacrificed. Animals in the satellite group must be sacrificed after 12 months of exposure to the test substance (interim sacrifice).

(8) *Clinical pathology*. Hematology, clinical chemistry and urinalyses must be performed from 10 animals per sex per group. The parameters should be examined at approximately 6 month intervals during the first 12 months of the study. If possible, these collections should be from the same animals at each interval. If hematological and biochemical effects are seen in the subchronic study, testing shall also be performed at 3 months. Overnight fasting of animals prior to blood sampling is recommended.

(i) *Hematology*. The recommended parameters are red blood cell count, hemoglobin concentration, hematocrit, mean corpuscular volume, mean corpuscular hemoglobin, and mean corpuscular hemoglobin concentration, white blood cell count, differential leukocyte count, platelet count, and a measure of clotting potential, such as prothrombin time or activated partial thromboplastin time.

(ii) *Clinical chemistry*. (A) Parameters which are considered appropriate to all studies are electrolyte balance, carbohydrate metabolism, and liver and kidney function. The selection of specific tests will be influenced by observations on the mode of action of the substance and signs of clinical toxicity.

(B) The recommended clinical chemistry determinations are potassium, sodium, glucose, total cholesterol, urea nitrogen, creatinine, total protein, and albumin. More than two hepatic enzymes, (such as alanine aminotransferase, aspartate aminotransferase, alkaline phosphatase, sorbitol dehydrogenase, or gamma glutamyl transpeptidase) should also be measured. Measurements of addtional enzymes (of hepatic or other origin) and bile acids, may also be useful.

(iii) If a test chemical has an effect on the hematopoietic system, reticulocyte counts and bone marrow cytology may be indicated.

(iv) Other determinations that should be carried out if the test chemical is known or suspected of affecting related measures include calcium, phosphorus, fasting triglycerides, hormones, methemoglobin, and cholinesterases.

(v) *Urinalyses*. Urinalysis for rodents must be performed at the end of the first year of the study using timed urine collection. Urinalysis determinations include: appearance, volume, osmolality or specific gravity, pH, protein, glucose, and blood/blood cells.

(9) *Ophthalmological examination*. Examinations must be made on all animals using an ophthalmoscope or an equivalent device prior to the administration of the test substance and at termination of the study on 10 animals per sex in the high-dose and control groups. If changes in eyes are detected, all animals must be examined.

(10) *Gross necropsy*. (i) A complete gross examination must be performed on all animals, including those which died during the experiment or were sacrificed in a moribund condition.

(ii) At least, the liver, kidneys, adrenals, testes, epididymides, ovaries, uterus, spleen, brain, and heart should be trimmed and weighed wet, as soon as possible after dissection to avoid drying. The lungs should be weighed if the test substance is administered by the inhalation route. The organs should be weighed from interim sacrifice animals as well as from at least 10 animals per sex per group at terminal sacrifice.

(iii) The following organs and tissues, or representative samples thereof, must be preserved in a suitable medium for possible future histopathological examination:

(A) Digestive system—salivary glands, esophagus, stomach, duodenum, jejunum, ileum, cecum, colon, rectum, liver, pancreas, gallbladder (when present) .

(B) Nervous system—brain (multiple sections, including cerebrum, cerebellum and medulla/pons), pituitary, peripheral nerve (sciatic or tibial, preferably in close proximity to the muscle), spinal cord (three levels, cervical, mid-thoracic, and lumbar), eyes (retina, optic nerve).

(C) Glandular system—adrenals, parathyroid, thyroid.

(D) Respiratory system—trachea, lungs, pharynx, larynx, nose.

(E) Cardiovascular/Hematopoietic system—aorta, heart, bone marrow (and/or fresh aspirate), lymph nodes (preferably one lymph node covering the route of administration and another one distant from the route of administration to cover systemic effects), spleen.

(F) Urogenital system—kidneys, urinary bladder, prostate, testes, epididymides, seminal vesicle(s), uterus, ovaries, female mammary gland.

(G) Other—all gross lesions and masses, skin.

(iv) In inhalation studies, the entire respiratory tract, including nose, pharynx, larynx, and paranasal sinuses should be examined and preserved. In dermal studies, skin from treated and adjacent control skin sites should be examined and preserved.

(v) Inflation of lungs and urinary bladder with a fixative is the optimal method for preservation of these tissues. The proper inflation and fixation of the lungs in inhalation studies is essential for appropriate and valid histopathological examination.

(vi) Information from clinical pathology and other in-life data should be considered before microscopic examination, since these data may provide significant guidance to the pathologist.

(11) [Reserved]

(12) *Histopathology*. (i) The following histopathology must be performed:

(A) Full histopathology on the organs and tissues, listed in paragraph (e)(10)(iii) of this section of all animals in the control and high dose groups and of all animals that died or were sacrificed during the study.

(B) All gross lesions in all animals.

(C) Target organs in all animals.

(ii) If the results show substantial alteration of the animal's normal life span, the induction of effects that might affect a neoplastic response, or other effects that might compromise the significance of the data, the next lower levels should be examined fully as described in paragraph (e)(12)(i) of this section.

(iii) An attempt should be made to correlate gross observations with microscopic findings.

(iv) Tissues and organs designated for microscopic examination should be fixed in 10% buffered formalin or a recognized suitable fixative as soon as necropsy is performed and no less than 48 hours prior to trimming.

(f) *Data and reporting*—(1) *Treatment of results*. (i) Data must be summarized in tabular form, showing for each test group the number of animals at the start of the test, the number of animals showing lesions, the types of lesions and the percentage of animals displaying each type of lesion.

(ii) When applicable, all observed results, quantitative and qualitative, must be evaluated by an appropriate statistical method. Any generally accepted statistical methods may be used; the statistical methods including significance criteria should be selected during the design of the study.

(2) *Evaluation of study results*. (i) The findings of a combined chronic toxicity/carcinogenicity study should be evaluated in conjunction with the findings of previous studies and considered

in terms of the toxic effects, the necropsy and histopathological findings. The evaluation must include the relationship between the dose of the test substance and the presence, incidence and severity of abnormalities (including behavioral and clinical abnormalities), gross lesions, identified target organs, body weight changes, effects on mortality and any other general or specific toxic effects.

(ii) In any study which demonstrates an absence of toxic effects, further investigation to establish absorption and bioavailablity of the test substance should be considered.

(iii) In order for a negative test to be acceptable, it should meet the following criteria—no more than 10% of any group is lost due to autolysis, cannibalism, or management problems, and survival in each group is no less than 50% at 15 months for mice and 18 months for rats. Survival should not fall below 25% at 18 months for mice and 24 months for rats.

(iv) The use of historical control data from an appropriate time period from the same testing laboratory (i.e, the incidence of tumors and other suspect lesions normally occurring under the same laboratory conditions and in the same strain of animals employed in the test) is helpful for assessing the significance of changes observed in the current study.

(3) *Test report*. (i) In addition to the reporting requirements specified under EPA Good Laboratory Practice Standards at 40 CFR part 792, subpart J, the following specific information must be reported:

(A) Test substance characterization should include:

(*1*) Chemical identification.

(*2*) Lot or batch number.

(*3*) Physical properties.

(*4*) Purity/impurities.

(*5*) Identification and composition of any vehicle used.

(B) Test system should contain data on:

(*1*) Species and strain of animals used and rationale for selection if other than that recommended.

(*2*) Age including body weight data and sex.

(*3*) Test environment including cage conditions, ambient temperature, humidity, and light/dark periods.

(*4*) Identification of animal diet.

(*5*) Acclimation period.

(C) Test procedure should include the following data:

(*1*) Method of randomization used.

(*2*) Full description of experimental design and procedure.

(*3*) Dose regimen including levels, methods, and volume.

(4) *Test results*. (i) Group animal data. Tabulation of toxic response data by species, strain, sex, and exposure level for:

(A) Number of animals exposed.

(B) Number of animals showing signs of toxicity.

(C) Number of animals dying.

(ii) Individual animal data. Data should be presented as summary (group mean) as well as for individual animals.

(A) Time of death during the study or whether animals survived to termination.

(B) Time of observation of each abnormal sign and its subsequent course.

(C) Body weight data.

(D) Feed and water consumption data, when collected.

(E) Achieved dose (milligrams/kilogram body weight) as a time-weighed average is the test substance is administered in the diet or drinking water.

(F) Results of ophthalmological examination, when performed.

(G) Results of hematological tests performed.

(H) Results of clinical chemistry tests performed.

(I) Results of urinalysis tests performed.

(J) Results of observations made.

(K) Necropsy findings including absolute/relative organ weight data.

(L) Detailed description of all histopathological findings.

(M) Statistical treatment of results where appropriate.

(N) Historical control data.

(iii) In addition, for inhalation studies the following should be reported:

(A) Test conditions. The following exposure conditions must be reported.

(*1*) Description of exposure apparatus including design, type, dimensions, source of air, system for generating

particulates and aerosols, method of conditioning air, treatment of exhaust air and the method of housing the animals in a test chamber.

(*2*) The equipment for measuring temperature, humidity, and particulate aerosol concentrations and size should be described.

(B) Exposure data. These must be tabulated and presented with mean values and a measure of variability (e.g., standard deviation) and should include:

(*1*) Airflow rates through the inhalation equipment.

(*2*) Temperature and humidity of air.

(*3*) Actual (analytical or gravimetric) concentration in the breathing zone.

(*4*) Nominal concentration (total amount of test substance fed into the inhalation equipment divided by volume of air).

(*5*) Particle size distribution, and calculated MMAD and geometric standard deviation.

(*6*) Explanation as to why the desired chamber concentration and/or particle size could not be achieved (if applicable) and the efforts taken to comply with this aspect of the guidelines.

(g) *Quality control.* A system must be developed and maintained to assure and document adequate performance of laboratory equipment. The study must be conducted in compliance with 40 CFR Part 792—Good Laborary Practice Standards.

(h) *References.* For additional background information on this test guideline, the following references should be consulted. These references are available at the addresses in § 700.17(b)(1) and (2) of this chapter.

(1) Benitz, K.F. *Measurement of Chronic Toxicity*. Methods of Toxicology. Ed. G.E. Paget. Blackwell, Oxford. pp. 82–131 (1970).

(2) Crofton K.M., Howard J.L., Moser V.C., Gill M.W., Leiter L.W., Tilson H.A., MacPhail, R.C. Interlaboratory Comparison of Motor Activity Experiments: Implication for Neurotoxicological Assessments. Neurotoxicol. Teratol. 13, 599–609. (1991)

(3) D'Aguanno, W. *Drug Safety Evaluation—Pre-Clinical Considerations. Industrial Pharmacology: Neuroleptic.* Vol. I, Ed. S. Fielding and H. Lal. Futura, Mt. Kisco, NY. pp. 317–332 (1974).

(4) Fitzhugh, O.G. *Chronic Oral Toxicity, Appraisal of the Safety of Chemicals in Foods, Drugs and Cosmetics*. The Association of Food and Drug Officials of the United States. pp. 36–45 (1959, 3rd Printing 1975).

(5) Goldenthal, E.I. and D'Aguanno, W. *Evaluation of Drugs, Appraisal of the Safety of Chemicals in Foods, Drugs, and Cosmetics*. The Association of Food and Drug Officials of the United States. pp. 60–67 (1959, 3rd Printing 1975).

(6) Organization for Economic Cooperation and Development. Guidelines for Testing of Chemicals, Section 4-Health Effects, Part 453 Combined Chronic Toxicity/Carcinogenicity Studies, Paris. (1981).

(7) Page, N.P. Chronic Toxicity and Carcinogenicity Guidelines. *Journal of Environmental Pathology and Toxicology* 11:161–182 (1977).

(8) Page, N.P. Concepts of a Bioassay Program in Environmental Carcinogenesis, Advances in Modern Toxicology. Vol.3, Ed. Kraybill and Mehlman. Hemisphere, Washington, DC pp. 87–171 (1977)

(9) Sontag, J.M. et al. Guidelines for Carcinogen Bioassay in Small Rodents. NCI-CS-TR-1 (Bethesda: United States Cancer Institute, Division of Cancer Control and Prevention, Carcinogenesis Bioassay Program.

(10) Summary of the EPA Workshop on Carcinogenesis Bioassay via the Dermal Route. EPA Report 50/6–89–002; 50/6–89–003. Washington, DC.

(11) The Atlas Of Dermal Lesions, EPA Report 20T–004, U.S Environmental Protection Agency, Washington, DC.

[65 FR 78802, Dec. 15, 2000, as amended at 77 FR 46294, Aug. 3, 2012]

§ 799.9510 TSCA bacterial reverse mutation test.

(a) *Scope.* This section is intended to meet the testing requirements under section 4 of TSCA.

(1) The bacterial reverse mutation test uses amino-acid requiring strains of *Salmonella typhimurium* and *Escherichia coli* to detect point mutations, which involve substitution, addition or deletion of one or a few DNA base pairs. The principle of this bacterial reverse mutation test is that it detects mutations which revert mutations

present in the test strains and restore the functional capability of the bacteria to synthesize an essential amino acid. The revertant bacteria are detected by their ability to grow in the absence of the amino acid required by the parent test strain.

(2) Point mutations are the cause of many human genetic diseases and there is substantial evidence that point mutations in oncogenes and tumor suppressor genes of somatic cells are involved in tumor formation in humans and experimental animals. The bacterial reverse mutation test is rapid, inexpensive and relatively easy to perform. Many of the test strains have several features that make them more sensitive for the detection of mutations, including responsive DNA sequences at the reversion sites, increased cell permeability to large molecules and elimination of DNA repair systems or enhancement of error-prone DNA repair processes. The specificity of the test strains can provide some useful information on the types of mutations that are induced by genotoxic agents. A very large data base of results for a wide variety of structures is available for bacterial reverse mutation tests and well-established methodologies have been developed for testing chemicals with different physico-chemical properties, including volatile compounds.

(b) *Source*. The source material used in developing this TSCA test guideline are the OECD replacement guidelines for 471 and 472 (February 1997). This source is available at the address in paragraph (g) of this section.

(c) *Definitions*. The following definitions apply to this section:

A reverse mutation test in either *Salmonella typhimurium* or *Escherichia coli* detects mutation in an amino-acid requiring strain (histidine or tryptophan, respectively) to produce a strain independent of an outside supply of amino-acid.

Base pair substitution mutagens are agents that cause a base change in DNA. In a reversion test this change may occur at the site of the original mutation, or at a second site in the bacterial genome.

Frameshift mutagens are agents that cause the addition or deletion of one or more base pairs in the DNA, thus changing the reading frame in the RNA

(d) *Initial considerations*. (1) The bacterial reverse mutation test utilizes prokaryotic cells, which differ from mammalian cells in such factors as uptake, metabolism, chromosome structure and DNA repair processes. Tests conducted *in vitro* generally require the use of an exogenous source of metabolic activation. *In vitro* metabolic activation systems cannot mimic entirely the mammalian *in vivo* conditions. The test therefore does not provide direct information on the mutagenic and carcinogenic potency of a substance in mammals.

(2) The bacterial reverse mutation test is commonly employed as an initial screen for genotoxic activity and, in particular, for point mutation-inducing activity. An extensive data base has demonstrated that many chemicals that are positive in this test also exhibit mutagenic activity in other tests. There are examples of mutagenic agents which are not detected by this test; reasons for these shortcomings can be ascribed to the specific nature of the endpoint detected, differences in metabolic activation, or differences in bioavailability. On the other hand, factors which enhance the sensitivity of the bacterial reverse mutation test can lead to an overestimation of mutagenic activity.

(3) The bacterial reverse mutation test may not be appropriate for the evaluation of certain classes of chemicals, for example highly bactericidal compounds (e.g. certain antibiotics) and those which are thought (or known) to interfere specifically with the mammalian cell replication system (e.g. some topoisomerase inhibitors and some nucleoside analogues). In such cases, mammalian mutation tests may be more appropriate.

(4) Although many compounds that are positive in this test are mammalian carcinogens, the correlation is not absolute. It is dependent on chemical class and there are carcinogens that are not detected by this test because they act through other, non-genotoxic mechanisms or mechanisms absent in bacterial cells.

(e) *Test method*—(1) *Principle*. (i) Suspensions of bacterial cells are exposed

to the test substance in the presence and in the absence of an exogenous metabolic activation system. In the plate incorporation method, these suspensions are mixed with an overlay agar and plated immediately onto minimal medium. In the preincubation method, the treatment mixture is incubated and then mixed with an overlay agar before plating onto minimal medium. For both techniques, after 2 or 3 days of incubation, revertant colonies are counted and compared to the number of spontaneous revertant colonies on solvent control plates.

(ii) Several procedures for performing the bacterial reverse mutation test have been described. Among those commonly used are the plate incorporation method, the preincubation method, the fluctuation method, and the suspension method. Suggestions for modifications for the testing of gases or vapors are described in the reference in paragraph (g)(12) of this section.

(iii) The procedures described in this section pertain primarily to the plate incorporation and preincubation methods. Either of them is acceptable for conducting experiments both with and without metabolic activation. Some compounds may be detected more efficiently using the preincubation method. These compounds belong to chemical classes that include short chain aliphatic nitrosamines, divalent metals, aldehydes, azo-dyes and diazo compounds, pyrollizidine alkaloids, allyl compounds and nitro compounds. It is also recognized that certain classes of mutagens are not always detected using standard procedures such as the plate incorporation method or preincubation method. These should be regarded as ''special cases'' and it is strongly recommended that alternative procedures should be used for their detection. The following ''special cases'' could be identified (together with examples of procedures that could be used for their detection): azo-dyes and diazo compounds (alterative procedures are described in the references in paragraphs (g)(3), (g)(5), (g)(6), and (g)(13) of this section), gases and volatile chemicals (alterative procedures are described in the references in paragraphs (g)(12), (g)(14), (g)(15), and (g)(16) of this section), and glycosides (alterative procedures are described in the references in paragraphs (g)(17) and (g)(18) of this section). A deviation from the standard procedure needs to be scientifically justified.

(2) *Description*—(i) *Preparations*—(A) *Bacteria*. (*1*) Fresh cultures of bacteria should be grown up to the late exponential or early stationary phase of growth (approximately 10^9 cells per ml). Cultures in late stationary phase should not be used. The cultures used in the experiment shall contain a high titre of viable bacteria. The titre may be demonstrated either from historical control data on growth curves, or in each assay through the determination of viable cell numbers by a plating experiment.

(*2*) The culture temperature shall be 37 °C.

(*3*) At least five strains of bacteria should be used. These should include four strains of *S. typhimurium* (TA1535; TA1537 or TA97a or TA97; TA98; and TA100) that have been shown to be reliable and reproducibly responsive between laboratories. These four *S. typhimurium* strains have GC base pairs at the primary reversion site and it is known that they may not detect certain oxidizing mutagens, cross-linking agents, and hydrazines. Such substances may be detected by E. coli WP2 strains or *S. typhimurium* TA102 (see reference in paragraph (g)(19) of this section) which have an AT base pair at the primary reversion site. Therefore the recommended combination of strains is:

(*i*) *S. typhimurium* TA1535.

(*ii*) *S. typhimurium* TA1537 or TA97 or TA97a.

(*iii*) *S. typhimurium* TA98.

(*iv*) *S. typhimurium* TA100.

(*v*) *E. coli* WP2 *uvrA*, or *E. coli* WP2 *uvrA* (pKM101), or *S. typhimurium* TA102. In order to detect cross-linking mutagens it may be preferable to include TA102 or to add a DNA repair-proficient strain of *E.coli* [e.g. *E.coli* WP2 or *E.coli* WP2 (pKM101).]

(*4*) Established procedures for stock culture preparation, marker verification and storage should be used. The amino-acid requirement for growth should be demonstrated for each frozen stock culture preparation (histidine for *S. typhimurium* strains, and tryptophan

for *E. coli* strains). Other phenotypic characteristics should be similarly checked, namely: the presence or absence of R-factor plasmids where appropriate [i.e. ampicillin resistance in strains TA98, TA100 and TA97a or TA97, WP2 *uvrA* and WP2 *uvrA* (pKM101), and ampicillin = tetracycline resistance in strain TA102]; the presence of characteristic mutations (i.e. rfa mutation in *S. typhimurium* through sensitivity to crystal violet, and *uvrA* mutation in *E. coli* or *uvrB* mutation in *S. typhimurium*, through sensitivity to ultra-violet light). The strains should also yield spontaneous revertant colony plate counts within the frequency ranges expected from the laboratory's historical control data and preferably within the range reported in the literature.

(B) *Medium*. An appropriate minimal agar (e.g. containing Vogel-Bonner minimal medium E and glucose) and an overlay agar containing histidine and biotin or tryptophan, to allow for a few cell divisions, shall be used. The procedures described in the references under paragraphs (g)(1), (g)(2), and (g)(9) of this section may be used for this analysis.

(C) *Metabolic activation*. Bacteria shall be exposed to the test substance both in the presence and absence of an appropriate metabolic activation system. The most commonly used system is a cofactor-supplemented post-mitochondrial fraction (S9) prepared from the livers of rodents treated with enzyme-inducing agents such as Aroclor 1254 (the system described in the references under paragraphs (g)(1) and (g)(2) of this section may be used) or a combination of phenobarbitone and β-naphthoflavone (the system described in the references under paragraphs (g)(18), (g)(20), and (g)(21) of this section may be used). The post-mitochondrial fraction is usually used at concentrations in the range from 5 to 30% v/v in the S9-mix. The choice and condition of a metabolic activation system may depend upon the class of chemical being tested. In some cases it may be appropriate to utilize more than one concentration of post-mitochondrial fraction. For azo-dyes and diazo-compounds, using a reductive metabolic activation system may be more appropriate (the system described in the references under paragraphs (g)(6) and (g)(13) of this section may be used).

(D) *Test substance/preparation*. Solid test substances should be dissolved or suspended in appropriate solvents or vehicles and diluted if appropriate prior to treatment of the bacteria. Liquid test substances may be added directly to the test systems and/or diluted prior to treatment. Fresh preparations should be employed unless stability data demonstrate the acceptability of storage.

(ii) *Test conditions*—(A) *Solvent/vehicle*. The solvent/vehicle should not be suspected of chemical reaction with the test substance and shall be compatible with the survival of the bacteria and the S9 activity (for further information see the reference in paragraph (g)(22) of this section). If other than well-known solvent/vehicles are used, their inclusion should be supported by data indicating their compatibility. It is recommended that wherever possible, the use of an aqueous solvent/vehicle be considered first. When testing water-unstable substances, the organic solvents used be free of water.

(B) *Exposure concentrations*. (*1*) Amongst the criteria to be taken into consideration when determining the highest amount of test substance to be used are cytotoxicity and solubility in the final treatment mixture. It may be useful to determine toxicity and insolubility in a preliminary experiment. Cytotoxicity may be detected by a reduction in the number of revertant colonies, a clearing or diminution of the background lawn, or the degree of survival of treated cultures. The cytotoxicity of a substance may be altered in the presence of metabolic activation systems. Insolubility should be assessed as precipitation in the final mixture under the actual test conditions and evident to the unaided eye. The recommended maximum test concentration for soluble non-cytotoxic substances is 5 mg/plate or 5 µl/plate. For non-cytotoxic substances that are not soluble at 5 mg/plate or 5 µl/plate, one or more concentrations tested should be insoluble in the final treatment mixture. Test substances that are cytotoxic already below 5mg/plate or 5

µl/plate should be tested up to a cytotoxic concentration. The precipitate should not interfere with the scoring.

(*2*) At least five different analyzable concentrations of the test substance shall be used with approximately half log (i.e. √10) intervals between test points for an initial experiment. Smaller intervals may be appropriate when a concentration-response is being investigated.

(*3*) Testing above the concentration of 5 mg/plate or 5 µl/plate may be considered when evaluating substances containing substantial amounts of potentially mutagenic impurities.

(C) *Controls.* (*1*) Concurrent strain-specific positive and negative (solvent or vehicle) controls, both with and without metabolic activation, shall be included in each assay. Positive control concentrations that demonstrate the effective performance of each assay should be selected.

(*2*)(*i*) For assays employing a metabolic activation system, the positive control reference substance(s) should be selected on the basis of the type of bacteria strains used. The following chemicals are examples of suitable positive controls for assays with metabolic activation:

Chemical	CAS No.
9,10-Dimethylanthracene	[CAS no. 781–43–1]
7,12-Dimethylbenzanthracene	[CAS no. 57–97–6]
Congo Red (for the reductive metabolic activation method).	[CAS no. 573–58–0]
Benzo(a)pyrene	[CAS no. 50–32–8]
Cyclophosphamide (monohydrate)	[CAS no. 50–18–0] [CAS no. 6055–19–2]
2-Aminoanthracene	[CAS no. 613–13–8]

(*ii*) 2-Aminoanthracene should not be used as the sole indicator of the efficacy of the S9-mix. If 2-aminoanthracene is used, each batch of S9 should also be characterized with a mutagen that requires metabolic activation by microsomal enzymes, e.g., benzo(a)pyrene, dimethylbenzanthracene.

(*3*) For assays performed without metabolic activation system, examples of strain-specific positive controls are:

Chemical	CAS No.	Strain
(a) Sodium azide	[CAS no. 26628–22–8]	TA1535 and TA100
(b) 2-Nitrofluorene	[CAS no. 607–57–8]	TA 98
(c) 9-Aminoacridine or ICR 191	[CAS no. 90–45–9] or [CAS no. 17070–45–0]	TA1537, TA97 and TA97a
(d) Cumene hydroperoxide	[CAS no. 80–15–9]	TA102
(e) Mitomycin C	[CAS no. 50–07–7]	WP2 *uvrA* and TA102
(f) N-Ethyl-N-nitro-N-nitrosoguanidine or 4-nitroquinoline 1-oxide	[CAS no. 70–25–7] or [CAS no. 56–57–5]	WP2, WP2 *uvrA* and WP2 *uvrA* (pKM101)
(g) Furylfuramide (AF-2)	[CAS no. 3688–53–7]	Plasmid-containing strains

(*4*) Other appropriate positive control reference substances may be used. The use of chemical class-related positive control chemicals may be considered, when available.

(*5*) Negative controls, consisting of solvent or vehicle alone, without test substance, and otherwise treated in the same way as the treatment groups, shall be included. In addition, untreated controls should also be used unless there are historical control data demonstrating that no deleterious or mutagenic effects are induced by the chosen solvent.

(3) *Procedure*—(i) *Treatment with test substance.* (A) For the plate incorporation method, without metabolic activation, usually 0.05 ml or 0.1 ml of the test solutions, 0.1 ml of fresh bacterial culture (containing approximately 10^8 viable cells) and 0.5 ml of sterile buffer are mixed with 2.0 ml of overlay agar. For the assay with metabolic activation, usually 0.5 ml of metabolic activation mixture containing an adequate amount of post-mitochondrial fraction (in the range from 5 to 30% v/v in the metabolic activation mixture) are mixed with the overlay agar (2.0 ml), together with the bacteria and test substance/test solution. The contents of each tube are mixed and poured over the surface of a minimal agar plate. The overlay agar is allowed to solidify before incubation.

(B) For the preincubation method the test substance/test solution is preincubated with the test strain (containing approximately 10^8 viable cells)

and sterile buffer or the metabolic activation system (0.5 ml) usually for 20 min. or more at 30–37 °C prior to mixing with the overlay agar and pouring onto the surface of a minimal agar plate. Usually, 0.05 or 0.1 ml of test substance/test solution, 0.1 ml of bacteria, and 0.5 ml of S9-mix or sterile buffer, are mixed with 2.0 ml of overlay agar. Tubes should be aerated during pre-incubation by using a shaker.

(C) For an adequate estimate of variation, triplicate plating should be used at each dose level. The use of duplicate plating is acceptable when scientifically justified. The occasional loss of a plate does not necessarily invalidate the assay.

(D) Gaseous or volatile substances should be tested by appropriate methods, such as in sealed vessels (methods described in the references under paragraphs (g)(12), (g)(14), (g)(15), and (g)(16) of this section may be used).

(ii) *Incubation*. All plates in a given assay shall be incubated at 37 °C for 48–72 hrs. After the incubation period, the number of revertant colonies per plate is counted.

(f) *Data and reporting*—(1) *Treatment of results*. (i) Data shall be presented as the number of revertant colonies per plate. The number of revertant colonies on both negative (solvent control, and untreated control if used) and positive control plates shall also be given.

(ii) Individual plate counts, the mean number of revertant colonies per plate and the standard deviation shall be presented for the test substance and positive and negative (untreated and/or solvent) controls.

(iii) There is no requirement for verification of a clear positive response. Equivocal results shall be clarified by further testing preferably using a modification of experimental conditions. Negative results need to be confirmed on a case-by-case basis. In those cases where confirmation of negative results is not considered necessary, justification should be provided. Modification of study parameters to extend the range of conditions assessed should be considered in follow-up experiments. Study parameters that might be modified include the concentration spacing, the method of treatment (plate incorporation or liquid preincubation), and metabolic activation conditions.

(2) *Evaluation and interpretation of results*. (i) There are several criteria for determining a positive result, such as a concentration-related increase over the range tested and/or a reproducible increase at one or more concentrations in the number of revertant colonies per plate in at least one strain with or without metabolic activation system. Biological relevance of the results should be considered first. Statistical methods may be used as an aid in evaluating the test results. However, statistical significance should not be the only determining factor for a positive response.

(ii) A test substance for which the results do not meet the criteria described under paragraph (f)(2)(i) of this section is considered non-mutagenic in this test

(iii) Although most experiments will give clearly positive or negative results, in rare cases the data set will preclude making a definite judgement about the activity of the test substance. Results may remain equivocal or questionable regardless of the number of times the experiment is repeated.

(iv) Positive results from the bacterial reverse mutation test indicate that a substance induces point mutations by base substitutions or frameshifts in the genome of either *Salmonella typhimurium* and/or *Escherichia coli*. Negative results indicate that under the test conditions, the test substance is not mutagenic in the tested species.

(3) *Test report*. The test report shall include the following information:

(i) Test substance:

(A) Identification data and CAS no., if known.

(B) Physical nature and purity.

(C) Physicochemical properties relevant to the conduct of the study.

(D) Stability of the test substance, if known.

(ii) Solvent/vehicle:

(A) Justification for choice of solvent/vehicle.

(B) Solubility and stability of the test substance in solvent/vehicle, if known.

(iii) Strains:

(A) Strains used.

(B) Number of cells per culture.

(C) Strain characteristics.

(iv) Test conditions:

(A) Amount of test substance per plate (mg/plate or ml/plate) with rationale for selection of dose and number of plates per concentration.

(B) Media used.

(C) Type and composition of metabolic activation system, including acceptability criteria.

(D) Treatment procedures.

(v) Results:

(A) Signs of toxicity.

(B) Signs of precipitation.

(C) Individual plate counts.

(D) The mean number of revertant colonies per plate and standard deviation.

(E) Dose-response relationship, where possible.

(F) Statistical analyses, if any.

(G) Concurrent negative (solvent/vehicle) and positive control data, with ranges, means and standard deviations.

(H) Historical negative (solvent/vehicle) and positive control data, with e.g. ranges, means and standard deviations.

(vi) Discussion of the results.

(vii) Conclusion.

(g) *References.* For additional background information on this test guideline, the following references should be consulted. These references are available at the addresses in § 700.17(b)(1) and (2) of this chapter.

(1) Ames, B.N., McCann, J., and Yamasaki, E. Methods for Detecting Carcinogens and Mutagens With the Salmonella/Mammalian-Microsome Mutagenicity Test. *Mutation Research*. 31, 347–364 (1975).

(2) Maron, D.M. and Ames, B.N. Revised Methods for the Salmonella Mutagenicity Test. *Mutation Research*. 113, 173–215 (1983).

(3) Gatehouse, D., Haworth, S., Cebula, T., Gocke, E., Kier, L., Matsushima, T., Melcion, C., Nohmi, T., Venitt, S., and Zeiger, E. Recommendations for the Performance of Bacterial Mutation Assays. *Mutation Research*. 312, 217–233 (1994).

(4) Kier, L.D., Brusick, D.J., Auletta, A.E., Von Halle, E.S., Brown, M.M., Simmon, V.F., Dunkel, V., McCann, J., Mortelmans, K., Prival, M., Rao, T.K., and Ray V. The Salmonella Typhimurium/Mammalian Microsomal Assay: A Report of the U.S. Environmental Protection Agency Gene-Tox Program. *Mutation Research*. 168, 69–240 (1986).

(5) Yahagi, T., Degawa, M., Seino, Y.Y., Matsushima, T., Nagao, M., Sugimura, T., and Hashimoto, Y. Mutagenicity of Carcinogen Azo Dyes and Their Derivatives. *Cancer Letters*, 1. 91–96 (1975).

(6) Matsushima, M., Sugimura, T., Nagao, M., Yahagi, T., Shirai, A., and Sawamura, M. Factors Modulating Mutagenicity Microbial Tests. Eds. Norpoth, K.H. and Garner, R.C. *Short-Term Test Systems for Detecting Carcinogens* (Springer, Berlin-Heidelberg-New York, 1980) pp. 273–285.

(7) Gatehouse, D.G., Rowland, I.R., Wilcox, P., Callender, R.D., and Foster, R. Bacterial Mutation Assays. Ed. Kirkland, D.J. *Basic Mutagenicity Tests*. UKEMS Part 1 Revised (Cambridge University Press, 1990) pp. 13–61.

(8) Aeschbacher, H.U., Wolleb, U., and Porchet, L.J. Liquid Preincubation Mutagenicity Test for Foods. *Food Safety*. 8, 167–177 (1987).

(9) Green, M.H.L., Muriel, W.J., and Bridges, B.A. Use of a Simplified Fluctuation Test to Detect Low Levels of Mutagens. *Mutation Research*. 38, 33–42 (1976).

(10) Hubbard, S.A., Green, M.H.L., Gatehouse, D., and J.W. Bridges. The Fluctuation Test in Bacteria. 2nd Edition. Ed. Kilbey, B.J., Legator, M., Nichols, W., and Ramel C. *Handbook of Mutagenicity Test Procedures* (Elsevier, Amsterdam-New York-Oxford, 1984) pp. 141–161.

(11) Thompson, E.D. and Melampy, P.J. An Examination of the Quantitative Suspension Assay for Mutagenesis With Strains of Salmonella Typhimurium. *Environmental Mutagenesis*. 3, 453–465 (1981).

(12) Araki, A., Noguchi, T., Kato, F., and T. Matsushima. Improved Method for Mutagenicity Testing of Gaseous Compounds by Using a Gas Sampling Bag. *Mutation Research*. 307, 335–344 (1994).

(13) Prival, M.J., Bell, S.J., Mitchell, V.D., Reipert, M.D., and Vaughn, V.L. Mutagenicity of Benzidine and Benzidine-Congener Dyes and Selected

Monoazo Dyes in a Modified Salmonella Assay. *Mutation Research*. 136, 33–47 (1984).

(14) Zeiger, E., Anderson, B. E., Haworth, S, Lawlor, T., and Mortelmans, K. Salmonella Mutagenicity Tests. V. Results from the Testing of 311 Chemicals. Environ. Mol. *Mutagen*. 19, 2–141 (1992).

(15) Simmon, V., Kauhanen, K., and Tardiff, R.G. Mutagenic Activity of Chemicals Identified in Drinking Water. Ed. Scott, D., Bridges, B., and Sobels, F. *Progress in Genetic Toxicology* (Elsevier, Amsterdam, 1977) pp. 249–258.

(16) Hughes, T.J., Simmons, D.M., Monteith, I.G., and Claxton, L.D. Vaporization Technique to Measure Mutagenic Activity of Volatile Organic Chemicals in the Ames/Salmonella Assay. *Environmental Mutagenesis*. 9, 421–441 (1987).

(17) Matsushima, T., Matsumoto, A., Shirai, M., Sawamura, M., and Sugimura, T. Mutagenicity of the Naturally Occurring Carcinogen Cycasin and Synthetic Methylazoxy Methane Conjugates in Salmonella Typhimurium. *Cancer Research*. 39, 3780–3782 (1979).

(18) Tamura, G., Gold, C., Ferro-Luzzi, A., and Ames. B.N. Fecalase: A Model for Activation of Dietary Glycosides to Mutagens by Intestinal Flora. Proc. National Academy of Science. (USA, 1980) 77, 4961–4965.

(19) Wilcox, P., Naidoo, A., Wedd, D. J., and Gatehouse, D. G. Comparison of Salmonella Typhimurium TA 102 With Escherichia Coli WP2 Tester Strains. *Mutagenesis*. 5, 285–291 (1990).

(20) Matsushima, T., Sawamura, M., Hara, K., and Sugimura, T. A Safe Substitute for Polychlorinated Biphenyls as an Inducer of Metabolic Activation Systems. Ed. F.J. de Serres *et al*. *In Vitro Metabolic Activation in Mutagenesis Testing*. (Elsevier, North Holland, 1976) pp. 85–88.

(21) Elliott, B.M., Combes, R.D., Elcombe, C.R., Gatehouse, D.G., Gibson, G.G., Mackay, J.M., and Wolf, R.C. Alternatives to Aroclor 1254-Induced S9 in *In Vitro* Genotoxicity Assays. *Mutagenesis*. 7, 175–177 (1992).

(22) Maron, D., Katzenellenbogen, J., and Ames, B.N. Compatibility of Organic Solvents With the Salmonella/Microsome Test. *Mutation Research*. 88, 343–350 (1981).

(23) Claxton, L.D., Allen, J., Auletta, A., Mortelmans, K., Nestmann, E., and Zeiger, E. Guide for the Salmonella Typhimurium/Mammalian Microsome Tests for Bacterial Mutagenicity. *Mutation Research*. 189, 83–91 (1987).

(24) Mahon, G.A.T., Green, M.H.L., Middleton, B., Mitchell, I., Robinson, W.D., and Tweats, D.J. Analysis of Data from Microbial Colony Assays. UKEMS Sub-Committee on Guidelines for Mutagenicity Testing Part II. Ed. Kirkland, D.J. *Statistical Evaluation of Mutagenicity Test Data* (Cambridge University Press, 1989) pp. 28–65.

[62 FR 43824, Aug. 15, 1997, as amended at 64 FR 35079, June 30, 1999; 77 FR 46294, Aug. 3, 2012]

§ 799.9530 TSCA in vitro mammalian cell gene mutation test.

(a) *Scope*. This section is intended to meet the testing requirements under section 4 of TSCA. The *in vitro* mammalian cell gene mutation test can be used to detect gene mutations induced by chemical substances. Suitable cell lines include L5178Y mouse lymphoma cells, the CHO, AS52 and V79 lines of Chinese hamster cells, and TK6 human lymphoblastoid cells under paragraph (g)(1) of this section. In these cell lines the most commonly-used genetic endpoints measure mutation at thymidine kinase (TK) and hypoxanthine-guanine phosphoribosyl transferase (HPRT), and a transgene of xanthine-guanine phosphoribosyl transferase (XPRT). The TK, HPRT and XPRT mutation tests detect different spectra of genetic events. The autosomal location of TK and XPRT may allow the detection of genetic events (e.g. large deletions) not detected at the HPRT locus on X-chromosomes (For a discussion see the references in paragraphs (g)(2), (g)(3), (g)(4),(g)(5), and (g)(6) of this section).

(b) *Source*. The source material used in developing this TSCA test guideline is the OECD guideline 476 (February 1997). This source is available at the address in paragraph (g) of this section.

(c) *Definitions*. The following definitions apply to this section:

Base pair substitution mutagens are substances which cause substitution of one or several base pairs in the DNA.

Forward mutation is a gene mutation from the parental type to the mutant form which gives rise to an alteration or a loss of the enzymatic activity or the function of the encoded protein.

Frameshift mutagens are substances which cause the addition or deletion of single or multiple base pairs in the DNA molecule.

Mutant frequency is the number of mutant cells observed divided by the number of viable cells.

Phenotypic expression time is a period during which unaltered gene products are depleted from newly mutated cells.

Relative suspension growth is an increase in cell number over the expression period relative to the negative control.

Relative total growth is an increase in cell number over time compared to a control population of cells; calculated as the product of suspension growth relative to the negative control times cloning efficiency relative to negative control.

Survival is the cloning efficiency of the treated cells when plated at the end of the treatment period; survival is usually expressed in relation to the survival of the control cell population.

Viability is the cloning efficiency of the treated cells at the time of plating in selective conditions after the expression period.

(d) *Initial considerations.* (1) In the *in vitro* mammalian cell gene mutation test, cultures of established cell lines or cell strains can be used. The cells used are selected on the basis of growth ability in culture and stability of the spontaneous mutation frequency. Tests conducted *in vitro* generally require the use of an exogenous source of metabolic activation. This metabolic activation system cannot mimic entirely the mammalian *in vivo* conditions. Care should be taken to avoid conditions which would lead to results not reflecting intrinsic mutagenicity. Positive results which do not reflect intrinsic mutagenicity may arise from changes in pH, osmolality or high levels of cytotoxicity.

(2) This test is used to screen for possible mammalian mutagens and carcinogens. Many compounds that are positive in this test are mammalian carcinogens; however, there is not a perfect correlation between this test and carcinogenicity. Correlation is dependent on chemical class and there is increasing evidence that there are carcinogens that are not detected by this test because they appear to act through other, non-genotoxic mechanisms or mechanisms absent in bacterial cells.

(e) *Test method*—(1) *Principle.* (i) Cells deficient in thymidine kinase (TK) due to the mutation $TK^{=/-}$ -≤$TK^{-/-}$ are resistant to the cytotoxic effects of the pyrimidine analogue trifluorothymidine (TFT). Thymidine kinase proficient cells are sensitive to TFT, which causes the inhibition of cellular metabolism and halts further cell division. Thus mutant cells are able to proliferate in the presence of TFT, whereas normal cells, which contain thymidine kinase, are not. Similarly, cells deficient in HPRT or XPRT are selected by resistance to 6-thioguanine (TG) or 8-azaguanine (AG). The properties of the test substance should be considered carefully if a base analogue or a compound related to the selective agent is tested in any of the mammalian cell gene mutation tests. For example, any suspected selective toxicity by the test substance for mutant and non-mutant cells should be investigated. Thus, performance of the selection system/agent shall be confirmed when testing chemicals structurally related to the selective agent.

(ii) Cells in suspension or monolayer culture shall be exposed to the test substance, both with and without metabolic activation, for a suitable period of time and subcultured to determine cytotoxicity and to allow phenotypic expression prior to mutant selection. Cytotoxicity is usually determined by measuring the relative cloning efficiency (survival) or relative total growth of the cultures after the treatment period. The treated cultures shall be maintained in growth medium for a sufficient period of time, characteristic of each selected locus and cell type, to allow near-optimal phenotypic expression of induced mutations. Mutant frequency is determined by seeding known numbers of cells in medium containing

the selective agent to detect mutant cells, and in medium without selective agent to determine the cloning efficiency (viability). After a suitable incubation time, colonies shall be counted. The mutant frequency is derived from the number of mutant colonies in selective medium and the number of colonies in non-selective medium.

(2) *Description*—(i) *Preparations*—(A) *Cells*. (*1*) A variety of cell types are available for use in this test including subclones of L5178Y, CHO, CHO-AS52, V79, or TK6 cells. Cell types used in this test should have a demonstrated sensitivity to chemical mutagens, a high cloning efficiency and a stable spontaneous mutant frequency. Cells should be checked for mycoplasma contamination and should not be used if contaminated.

(*2*) The test should be designed to have a predetermined sensitivity and power. The number of cells, cultures, and concentrations of test substance used should reflect these defined parameters. The parameters discussed in the reference under paragraph (g)(13) of this section may be used. The minimal number of viable cells surviving treatment and used at each stage in the test should be based on the spontaneous mutation frequency. A general guide is to use a cell number which is at least ten times the inverse of the spontaneous mutation frequency. However, it is recommended to utilize at least 10^6 cells. Adequate historical data on the cell system used should be available to indicate consistent performance of the test.

(B) *Media and culture conditions*. Appropriate culture media and incubation conditions (culture vessels, temperature, CO_2 concentration and humidity) shall be used. Media should be chosen according to the selective systems and cell type used in the test. It is particularly important that culture conditions should be chosen that ensure optimal growth of cells during the expression period and colony forming ability of both mutant and non-mutant cells.

(C) *Preparation of cultures*. Cells are propagated from stock cultures, seeded in culture medium and incubated at 37 °C. Prior to use in this test, cultures may need to be cleansed of pre-existing mutant cells.

(D) *Metabolic activation*. Cells shall be exposed to the test substance both in the presence and absence of an appropriate metabolic activation system. The most commonly used system is a co-factor-supplemented post-mitochondrial fraction (S9) prepared from the livers of rodents treated with enzyme-inducing agents such as Aroclor 1254 or a combination of phenobarbitone and β-naphthoflavone. The post-mitochondrial fraction is usually used at concentrations in the range from 1–10% v/v in the final test medium. The choice and condition of a metabolic activation system may depend upon the class of chemical being tested. In some cases it may be appropriate to utilize more than one concentration of post-mitochondrial fraction. A number of developments, including the construction of genetically engineered cell lines expressing specific activating enzymes, may provide the potential for endogenous activation. The choice of the cell lines used should be scientifically justified (e.g. by the relevance of the cytochrome P450 isoenzyme to the metabolism of the test substance).

(E) *Test substance/preparations*. Solid test substances should be dissolved or suspended in appropriate solvents or vehicles and diluted if appropriate prior to treatment of the cells. Liquid test substances may be added directly to the test systems and/or diluted prior to treatment. Fresh preparations should be employed unless stability data demonstrate the acceptability of storage.

(ii) *Test conditions*—(A) *Solvent/vehicle*. The solvent/vehicle shall not be suspected of chemical reaction with the test substance and shall be compatible with the survival of the cells and the S9 activity. If other than well-known solvent/vehicles are used, their inclusion should be supported by data indicating their compatibility. It is recommended that wherever possible, the use of an aqueous solvent/vehicle be considered first. When testing water-unstable substances, the organic solvents used should be free of water. Water can be removed by adding a molecular sieve.

(B) *Exposure concentrations*. (*1*) Among the criteria to be considered

when determining the highest concentration are cytotoxicity and solubility in the test system and changes in pH or osmolality.

(*2*) Cytotoxicity should be determined with and without metabolic activation in the main experiment using an appropriate indicator of cell integrity and growth, such as relative cloning efficiency (survival) or relative total growth. It may be useful to determine cytotoxicity and solubility in a preliminary experiment.

(*3*) At least four analyzable concentrations shall be used. Where there is cytotoxicity, these concentrations shall cover a range from the maximum to little or no toxicity; this will usually mean that the concentration levels should be separated by no more than a factor between 2 and √10. If the maximum concentration is based on cytotoxicity then it shall result in approximately 10–20% but not less than 10% relative survival (relative cloning efficiency) or relative total growth. For relatively non-cytotoxic compounds the maximum concentration should be 5 mg/ml, 5 µl/ml, or 0.01 M, whichever is the lowest.

(*4*) Relatively insoluble substances should be tested up to or beyond their limit of solubility under culture conditions. Evidence of insolubility should be determined in the final treatment medium to which cells are exposed. It may be useful to assess solubility at the beginning and end of the treatment, as solubility can change during the course of exposure in the test system due to presence of cells, S9, serum etc. Insolubility can be detected by using the unaided eye. The precipitate should not interfere with the scoring.

(C) *Controls*. (*1*) Concurrent positive and negative (solvent or vehicle) controls both with and without metabolic activation shall be included in each experiment. When metabolic activation is used the positive control chemical shall be one that requires activation to give a mutagenic response.

(*2*) Examples of positive control substances include:

Metabolic Activation condition	Locus	Chemical	CAS No.
Absence of exogenous metabolic activation	HPRT	Ethylmethanesulfonate.	[CAS no. 62–50–0]
	.....	Ethylnitrosourea	[CAS no. 759–73–9]
	TK (small and large colonies).	Methylmethanesulfonate.	[CAS no. 66–27–3]
	XPRT	Ethylmethanesulfonate.	[CAS no. 62–50–0]
		Ethylnitrosourea	[CAS no. 759–73–9]
Presence of exogenous metabolic activation.	HPRT	3-Methylcholanthrene.	[CAS no. 56–49–5]
		N-Nitrosodimethylamine.	[CAS no. 62–75–9]
		7,12-Dimethylbenzanthracene.	[CAS no. 57–97–6]
	TK (small and large colonies).	Cyclophosphamide (monohydrate).	[CAS no. 50–18–0] [CAS no. 6055–19–2]
		Benzo(a)pyrene	[CAS no. 50–32–8]
		3-Methylcholanthrene.	[CAS no. 56–49–5]
	XPRT	N-Nitrosodimethylamine (for high levels of S-9).	[CAS no. 62–75–9]
		Benzo(a)pyrene	[CAS no. 50–32–8]

(*3*) Other appropriate positive control reference substances may be used, e.g., if a laboratory has a historical data base on 5-Bromo 2′-deoxyuridine [CAS No. 59–14–3], this reference substance could be used as well. The use of chemical class-related positive control chemicals may be considered, when available.

(*4*) Negative controls, consisting of solvent or vehicle alone in the treatment medium, and treated in the same way as the treatment groups shall be included. In addition, untreated controls should also be used unless there

are historical control data demonstrating that no deleterious or mutagenic effects are induced by the chosen solvent.

(3) *Procedure*—(i) *Treatment with test substance.* (A) Proliferating cells shall be exposed to the test substance both with and without metabolic activation. Exposure shall be for a suitable period of time (usually 3 to 6 hrs is effective). Exposure time may be extended over one or more cell cycles.

(B) Either duplicate or single treated cultures may be used at each concentration tested. When single cultures are used, the number of concentrations should be increased to ensure an adequate number of cultures for analysis (e.g. at least eight analyzsable concentrations). Duplicate negative (solvent) control cultures should be used.

(C) Gaseous or volatile substances should be tested by appropriate methods, such as in sealed culture vessels. Methods described in the references under paragraphs (g)(20) and (g)(21) of this section may be used.

(ii) *Measurement of survival, viability, and mutant frequency.* (A) At the end of the exposure period, cells shall be washed and cultured to determine survival and to allow for expression of the mutant phenotype. Measurement of cytotoxicity by determining the relative cloning efficiency (survival) or relative total growth of the cultures is usually initiated after the treatment period.

(B) Each locus has a defined minimum time requirement to allow near optimal phenotypic expression of newly induced mutants (HPRT and XPRT require at least 6–8 days, and TK at least 2 days). Cells are grown in medium with and without selective agent(s) for determination of numbers of mutants and cloning efficiency, respectively. The measurement of viability (used to calculate mutant frequency) is initiated at the end of the expression time by plating in non-selective medium.

(C) If the test substance is positive in the L5178Y $TK^{=/-}$ test, colony sizing should be performed on at least one of the test cultures (the highest positive concentration) and on the negative and positive controls. If the test substance is negative in the L5178Y $TK^{=/-}$ test, colony sizing should be performed on the negative and positive controls. In studies using TK6$TK^{=/-}$, colony sizing may also be performed.

(f) *Data and reporting*—(1) *Treatment of results.* (i) Data shall include cytotoxicity and viability determination, colony counts and mutant frequencies for the treated and control cultures. In the case of a positive response in the L5178Y $TK^{=/-}$ test, colonies are scored using the criteria of small and large colonies on at least one concentration of the test substance (highest positive concentration) and on the negative and positive control. The molecular and cytogenetic nature of both large and small colony mutants has been explored in detail and is discussed in the references under paragraphs (g)(22) and (g)(23) of this section. In the $TK^{=/-}$ test, colonies are scored using the criteria of normal growth (large) and slow growth (small) colonies (a scoring system similar to the one described in the reference under paragraph (g)(24) of this section may be used). Mutant cells that have suffered the most extensive genetic damage have prolonged doubling times and thus form small colonies. This damage typically ranges in scale from the losses of the entire gene to karyotypically visible chromosome aberrations. The induction of small colony mutants has been associated with chemicals that induce gross chromosome aberrations. Less seriously affected mutant cells grow at rates similar to the parental cells and form large colonies.

(ii) Survival (relative cloning efficiencies) or relative total growth shall be given. Mutant frequency shall be expressed as number of mutant cells per number of surviving cells.

(iii) Individual culture data shall be provided. Additionally, all data shall be summarized in tabular form.

(iv) There is no requirement for verification of a clear positive response. Equivocal results shall be clarified by further testing preferably using a modification of experimental conditions. Negative results need to be confirmed on a case-by-case basis. In those cases where confirmation of negative results is not considered necessary, justification should be provided. Modification of study parameters to extend the

range of conditions assessed should be considered in follow-up experiments for either equivocal or negative results. Study parameters that might be modified include the concentration spacing, and the metabolic activation conditions.

(2) *Evaluation and interpretation of results.* (i) There are several criteria for determining a positive result, such as a concentration-related, or a reproducible increase in mutant frequency. Biological relevance of the results should be considered first. Statistical methods may be used as an aid in evaluating the test results. Statistical significance should not be the only determining factor for a positive response.

(ii) A test substance, for which the results do not meet the criteria described in paragraph (f)(2)(i) of this section is considered non-mutagenic in this system.

(iii) Although most studies will give clearly positive or negative results, in rare cases the data set will preclude making a definite judgement about the activity of the test substance. Results may remain equivocal or questionable regardless of the number of times the experiment is repeated.

(iv) Positive results for an *in vitro* mammalian cell gene mutation test indicate that the test substance induces gene mutations in the cultured mammalian cells used. A positive concentration-response that is reproducible is most meaningful. Negative results indicate that, under the test conditions, the test substance does not induce gene mutations in the cultured mammalian cells used.

(3) *Test report.* The test report shall include the following information:

(i) Test substance:

(A) Identification data and CAS no., if known.

(B) Physical nature and purity.

(C) Physicochemical properties relevant to the conduct of the study.

(D) Stability of the test substance.

(ii) Solvent/vehicle:

(A) Justification for choice of vehicle/solvent.

(B) Solubility and stability of the test substance in solvent/vehicle, if known.

(iii) Cells:

(A) Type and source of cells.

(B) Number of cell cultures.

(C) Number of cell passages, if applicable.

(D) Methods for maintenance of cell cultures, if applicable.

(E) Absence of mycoplasma.

(iv) Test conditions:

(A) Rationale for selection of concentrations and number of cell cultures including e.g., cytotoxicity data and solubility limitations, if available.

(B) Composition of media, CO_2 concentration.

(C) Concentration of test substance.

(D) Volume of vehicle and test substance added.

(E) Incubation temperature.

(F) Incubation time.

(G) Duration of treatment.

(H) Cell density during treatment.

(I) Type and composition of metabolic activation system including acceptability criteria.

(J) Positive and negative controls.

(K) Length of expression period (including number of cells seeded, and subcultures and feeding schedules, if appropriate).

(L) Selective agent(s).

(M) Criteria for considering tests as positive, negative or equivocal.

(N) Methods used to enumerate numbers of viable and mutant cells.

(O) Definition of colonies of which size and type are considered (including criteria for ''small'' and ''large'' colonies, as appropriate).

(v) Results:

(A) Signs of toxicity.

(B) Signs of precipitation.

(C) Data on pH and osmolality during the exposure to the test substance, if determined.

(D) Colony size if scored for at least negative and positive controls.

(E) Laboratory's adequacy to detect small colony mutants with the L5178Y $TK^{=/-}$ system, where appropriate.

(F) Dose-response relationship, where possible.

(G) Statistical analyses, if any.

(H) Concurrent negative (solvent/vehicle) and positive control data.

(I) Historical negative (solvent/vehicle) and positive control data with ranges, means, and standard deviations.

(J) Mutant frequency.

(vi) Discussion of the results.

(vii) Conclusion.

(g) *References*. For additional background information on this test guideline, the following references should be consulted. These references are available at the addresses in § 700.17(b)(1) and (2) of this chapter.

(1) Chu, E.H.Y. and Malling, H.V. Mammalian Cell Genetics. II. Chemical Induction of Specific Locus Mutations in Chinese Hamster Cells *In Vitro*, Proc. National Academy Science (USA, 1968) 61, 1306–1312.

(2) Liber, H.L. and Thilly, W.G. Mutation Assay at the Thymidine Kinase Locus in Diploid Human Lymphoblasts. *Mutation Research*. 94, 467–485 (1982).

(3) Moore, M.M., Harrington-Brock, K., Doerr, C.L., and Dearfield, K.L. Differential Mutant Quantitation at the Mouse Lymphoma TK and CHO HGPRT Loci. *Mutagenesis*. 4, 394–403 (1989).

(4) Aaron, C.S. and Stankowski, Jr., L.F. Comparison of the AS52/XPRT and the CHO/HPRT Assays: Evaluation of Six Drug Candidates. *Mutation Research*. 223, 121–128 (1989).

(5) Aaron, C.S., Bolcsfoldi, G., Glatt, H.R., Moore, M., Nishi, Y., Stankowski, L., Theiss, J., and Thompson, E. Mammalian Cell Gene Mutation Assays Working Group Report. Report of the International Workshop on Standardization of Genotoxicity Test Procedures. *Mutation Research*. 312, 235–239 (1994).

(6) Scott, D., Galloway, S.M., Marshall, R.R., Ishidate, M., Brusick, D., Ashby, J., and Myhr, B.C. Genotoxicity Under Extreme Culture Conditions. A report from ICPEMC Task Group 9. *Mutation Research*. 257, 147–204 (1991).

(7) Clive, D., McCuen, R., Spector, J.F.S., Piper, C., and Mavournin, K.H. Specific Gene Mutations in L5178Y Cells in Culture. A Report of the U.S. Environmental Protection Agency Gene-Tox Program. *Mutation Research*. 115, 225–251 (1983).

(8) Li, A.P., Gupta, R.S., Heflich, R.H., and Wasson, J. S. A Review and Analysis of the Chinese Hamster Ovary/Hypoxanthine Guanine Phosphoribosyl Transferase System to Determine the Mutagenicity of Chemical Agents: A Report of Phase III of the U.S. Environmental Protection Agency Gene-Tox Program. *Mutation Research*. 196, 17–36 (1988).

(9) Li, A.P., Carver, J.H., Choy, W.N., Hsie, A.W., Gupta, R.S., Loveday, K.S., O'Neill, J.P., Riddle, J.C., Stankowski, Jr., L.F., and Yang, L.L. A Guide for the Performance of the Chinese Hamster Ovary Cell/Hypoxanthine-Guanine Phosphoribosyl Transferase Gene Mutation Assay. *Mutation Research*. 189, 135–141 (1987).

(10) Liber, H.L., Yandell, D.W., and Little, J.B. A Comparison of Mutation Induction at the tk and hprt Loci in Human Lymphoblastoid Cells; Quantitative Differences are Due to an Additional Class of Mutations at the Autosomal TK Locus. *Mutation Research*. 216, 9–17 (1989).

(11) Stankowski, L.F. Jr., Tindall, K.R., and Hsie, A.W. Quantitative and Molecular Analyses of Ethyl Methanesulfonate- and ICR 191-Induced Molecular Analyses of Ethyl Methanesulfonate- and ICR 191-Induced Mutation in AS52 Cells. *Mutation Reseach*. 160, 133–147 (1986).

(12) Turner, N.T., Batson, A.G., and Clive, D. Eds. Kilbey, B.J. et al. Procedures for the L5178Y/TK$^{=/-}$ >TK$^{=/-}$ Mouse Lymphoma Cell Mutagenicity Assay. *Handbook of Mutagenicity Test Procedures* (Elsevier Science Publishers, New York, 1984) pp. 239–268.

(13) Arlett, C.F., Smith, D.M., Clarke, G.M., Green, M.H.L., Cole, J., McGregor, D.B., and Asquith, J.C. Ed. Kirkland, D.J. Mammalian Cell Gene Mutation Assays Based Upon Colony Formation. *Statistical Evaluation of Mutagenicity Test Data* (Cambridge University Press, 1989) pp. 66–101.

(14) Abbondandolo, A., Bonatti, S., Corti, G., Fiorio, R., Loprieno, N., and Mazzaccaro, A. Induction of 6-Thioguanine-Resistant Mutants in V79 Chinese Hamster Cells by Mouse-Liver Microsome-Activated Dimethylnitrosamine. *Mutation Research*. 46, 365–373 (1977).

(15) Ames, B.N., McCann, J., and Yamasaki, E. Methods for Detecting Carcinogens and Mutagens with the Salmonella/Mammalian-Microsome Mutagenicity Test. *Mutation Reseach*. 31, 347–364 (1975).

(16) Clive, D., Johnson, K.O., Spector, J.F.S., Batson, A.G., and Brown M.M.M. Validation and Characterization of the L5178Y/TK$^{=/-}$ Mouse

Lymphoma Mutagen Assay System. *Mutation Reseach*. 59, 61–108 (1979).

(17) Maron, D.M. and Ames, B.N. Revised Methods for the Salmonella Mutagenicity Test. *Mutation Reseach*. 113, 173, 215 (1983).

(18) Elliott, B.M., Combes, R.D., Elcombe, C.R., Gatehouse, D.G., Gibson, G.G., Mackay, J.M., and Wolf, R.C. Alternatives to Aroclor 1254-Induced S9 in *In Vitro* Genotoxicity Assays. *Mutagenesis*. 7, 175–177 (1992).

(19) Matsushima, T., Sawamura, M., Hara, K., and Sugimura, T. A Safe Substitute for Polychlorinated Biphenyls as an Inducer of Metabolic Activation Systems. (Eds.) de Serres, F.J., Fouts, J.R., Bend, J.R., and Philpot, R.M. *In Vitro Metabolic Activation in Mutagenesis Testing* (Elsevier, North-Holland, 1976) pp. 85–88.

(20) Krahn, D.F., Barsky, F.C., and McCooey, K.T. Eds. Tice, R.R., Costa, D.L., and Schaich, K.M. CHO/HGPRT Mutation Assay: Evaluation of Gases and Volatile Liquids. *Genotoxic Effects of Airborne Agents* (New York, Plenum, 1982) pp. 91–103.

(21) Zamora, P.O., Benson, J.M., Li, A.P., and Brooks, A.L. Evaluation of an Exposure System Using Cells Grown on Collagen Gels for Detecting Highly Volatile Mutagens in the CHO/HGPRT Mutation Assay. *Environmental Mutagenesis*. 5, 795–801 (1983).

(22) Applegate, M.L., Moore, M.M., Broder, C.B., Burrell, A., and Hozier, J.C. Molecular Dissection of Mutations at the Heterozygous Thymidine Kinase Locus in Mouse Lymphoma Cells. Proc. National Academy Science (USA, 1990) 87, 51–55.

(23) Moore, M.M., Clive, D., Hozier, J.C., Howard, B.E., Batson, A.G., Turner, N.T., and Sawyer, J. Analysis of Trifluorothymidine-Resistant (TFT^r) Mutants of L5178Y/TK$^{=/-}$ Mouse Lymphoma Cells. *Mutation Research*. 151, 161–174 (1985).

(24) Yandell, D.W., Dryja, T.P., and Little J.B. Molecular Genetic Analysis of Recessive Mutations at a Heterozygous Autosomal Locus in Human Cells. *Mutation Research*. 229, 89–102 (1990).

(25) Moore, M.M. and Doerr, C.L. Comparison of Chromosome Aberration Frequency and Small-Colony TK-Deficient Mutant Frequency in L5178Y/TK$^{=/-}$ 3.7.2C Mouse Lymphoma Cells. *Mutagenesis*. 5, 609–614 (1990).

[62 FR 43824, Aug. 15, 1997, as amended at 77 FR 46294, Aug. 3, 2012]

§ 799.9537 TSCA in vitro mammalian chromosome aberration test.

(a) *Scope*—(1) *Applicability*. This section is intended to meet testing requirements under section 4 of the Toxic Substances Control Act (TSCA) (15 U.S.C. 2601).

(2) *Background*. The source material used in developing this TSCA test guideline is the Office of Prevention, Pesticides, and Toxic Substances (OPPTS) harmonized test guideline 870.5375 (August 1998, final guidelines). The source is available at the address in paragraph (i) of this section.

(b) *Purpose*. (1) The purpose of the *in vitro* chromosome aberration test is to identify agents that cause structural chromosome aberrations in cultured mammalian cells (see paragraphs (i)(1), (i)(2), and (i)(3) of this section). Structural aberrations may be of two types, chromosome or chromatid. With the majority of chemical mutagens, induced aberrations are of the chromatid type, but chromosome-type aberrations also occur. An increase in polyploidy may indicate that a chemical has the potential to induce numerical aberrations. However, this guideline is not designed to measure numerical aberrations and is not routinely used for that purpose. Chromosome mutations and related events are the cause of many human genetic diseases and there is substantial evidence that chromosome mutations and related events causing alterations in oncogenes and tumour-suppressor genes of somatic cells are involved in cancer induction in humans and experimental animals.

(2) The *in vitro* chromosome aberration test may employ cultures of established cell lines, cell strains or primary cell cultures. The cells used are selected on the basis of growth ability in culture, stability of the karyotype, chromosome number, chromosome diversity, and spontaneous frequency of chromosome aberrations.

(c) *Definitions*. The definitions in section 3 of TSCA and in 40 CFR Part 792—Good Laboratory Practice Standards

apply to this test guideline. The following definitions also apply to this test guideline.

Chromatid-type aberration is structural chromosome damage expressed as breakage of single chromatids or breakage and reunion between chromatids.

Chromosome-type aberration is structural chromosome damage expressed as breakage, or breakage and reunion, of both chromatids at an identical site.

Endoreduplication is a process in which after an S period of DNA replication, the nucleus does not go into mitosis but starts another S period. The result is chromosomes with 4, 8, 16,...chromatids.

Gap is an achromatic lesion smaller than the width of one chromatid, and with minimum misalignment of the chromatid(s).

Mitotic index is the ratio of cells in metaphase divided by the total number of cells observed in a population of cells; an indication of the degree of proliferation of that population.

Numerical aberration is a change in the number of chromosomes from the normal number characteristic of the cells utilized.

Polyploidy is a multiple of the haploid chromosome number (n) other than the diploid number (i.e., 3n, 4n, and so on).

Structural aberration is a change in chromosome structure detectable by microscopic examination of the metaphase stage of cell division, observed as deletions and fragments, intrachanges, and interchanges.

(d) *Initial considerations.* (1) Tests conducted *in vitro* generally require the use of an exogenous source of metabolic activation. This metabolic activation system cannot mimic entirely the mammalian *in vivo* conditions. Care should be taken to avoid conditions which would lead to positive results which do not reflect intrinsic mutagenicity and may arise from changes in pH, osmolality, or high levels of cytotoxicity (the test techniques described in the references under paragraphs (i)(4) and (i)(5) of this section may be used).

(2) This test is used to screen for possible mammalian mutagens and carcinogens. Many compounds that are positive in this test are mammalian carcinogens; however, there is not a perfect correlation between this test and carcinogenicity. Correlation is dependent on chemical class and there is increasing evidence that there are carcinogens that are not detected by this test because they appear to act through mechanisms other than direct DNA damage.

(e) *Principle of the test method.* Cell cultures are exposed to the test substance both with and without metabolic activation. At predetermined intervals after exposure of cell cultures to the test substance, they are treated with a metaphase-arresting substance (e.g., Colcemid® or colchicine), harvested, stained, and metaphase cells are analysed microscopically for the presence of chromosome aberrations.

(f) *Description of the method*—(1) *Preparations*—(i) *Cells.* A variety of cell lines, strains, or primary cell cultures, including human cells, may be used (e.g., Chinese hamster fibroblasts, human, or other mammalian peripheral blood lymphocytes).

(ii) *Media and culture conditions.* Appropriate culture media, and incubation conditions (culture vessels, CO^2 concentration, temperature and humidity) must be used in maintaining cultures. Established cell lines and strains must be checked routinely for stability in the modal chromosome number and the absence of *Mycoplasma* contamination and should not be used if contaminated. The normal cell-cycle time for the cells and culture conditions used should be known.

(iii) *Preparation of cultures*—(A) *Established cell lines and strains.* Cells are propagated from stock cultures, seeded in culture medium at a density such that the cultures will not reach confluency before the time of harvest, and incubated at 37 °C.

(B) *Lymphocytes.* Whole blood treated with an anti-coagulant (e.g., heparin) or separated lymphocytes obtained from healthy subjects are added to culture medium containing a mitogen (e.g., phytohemagglutinin) and incubated at 37 °C.

(iv) *Metabolic activation.* Cells must be exposed to the test substance both in the presence and absence of an appropriate metabolic activation system.

The most commonly used system is a co-factor-supplemented post-mitochondrial fraction (S9) prepared from the livers of rodents treated with enzyme-inducing agents such as Aroclor 1254 (the test techniques described in the references under paragraphs (i)(6), (i)(7), (8)(i), and (i)(9) of this section may be used), or a mixture of phenobarbitone and β-naphthoflavone (the test techniques described in the references under paragraphs (i)(10), (i)(11), and (i)(12) of this section may be used). The post-mitochondrial fraction is usually used at concentrations in the range from 1-10% v/v in the final test medium. The condition of a metabolic activation system may depend upon the class of chemical being tested. In some cases, it may be appropriate to utilize more than one concentration of post-mitochondrial fraction. A number of developments, including the construction of genetically engineered cell lines expressing specific activating enzymes, may provide the potential for endogenous activation. The choice of the cell lines used should be scientifically justified (e.g., by the relevance of the cytochrome P450 isoenzyme for the metabolism of the test substance).

(v) *Test substance/preparation.* Solid test substances should be dissolved or suspended in appropriate solvents or vehicles and diluted, if appropriate, prior to treatment of the cells. Liquid test substances may be added directly to the test systems and/or diluted prior to treatment. Fresh preparations of the test substance should be employed unless stability data demonstrate the acceptability of storage.

(2) *Test conditions*—(i) *Solvent/vehicle.* The solvent/vehicle should not be suspected of chemical reaction with the test substance and must be compatible with the survival of the cells and the S9 activity. If other than well-known solvent/vehicles are used, their inclusion should be supported by data indicating their compatibility. It is recommended that wherever possible, the use of an aqueous solvent/vehicle be considered first. When testing water-unstable substances, the organic solvents used should be free of water. Water can be removed by adding a molecular sieve.

(ii) *Exposure concentrations.* (A) Among the criteria to be considered when determining the highest concentration are cytotoxicity, solubility in the test system, and changes in pH or osmolality.

(B) Cytotoxicity should be determined with and without metabolic activation in the main experiment using an appropriate indication of cell integrity and growth, such as degree of confluency, viable cell counts, or mitotic index. It may be useful to determine cytotoxicity and solubility in a preliminary experiment.

(C) At least three analyzable concentrations should be used. Where cytotoxicity occurs, these concentrations should cover a range from the maximum to little or no toxicity; this will usually mean that the concentrations should be separated by no more than a factor between 2 and √10. At the time of harvesting, the highest concentration should show a significant reduction in degree of confluency, cell count or mitotic index, (all greater than 50%). The mitotic index is only an indirect measure of cytotoxic/cytostatic effects and depends on the time after treatment. However, the mitotic index is acceptable for suspension cultures in which other toxicity measurements may be cumbersome and impractical. Information on cell-cycle kinetics, such as average generation time (AGT), could be used as supplementary information. AGT, however, is an overall average that does not always reveal the existence of delayed subpopulations, and even slight increases in average generation time can be associated with very substantial delay in the time of optimal yield of aberrations. For relatively non-cytotoxic compounds the maximum concentration should be 5 μg/ml, 5mg/ml, or 0.01M, whichever is the lowest.

(D) For relatively insoluble substances that are not toxic at concentrations lower than the insoluble concentration, the highest dose used should be a concentration above the limit of solubility in the final culture medium at the end of the treatment period. In some cases (e.g., when toxicity occurs only at higher than the lowest insoluble concentration) it is advisable to test at more than one concentration

with visible precipitation. It may be useful to assess solubility at the beginning and the end of the treatment, as solubility can change during the course of exposure in the test system due to presence of cells, S9, serum etc. Insolubility can be detected by using the unaided eye. The precipitate should not interfere with the scoring.

(iii) *Controls*. (A) Concurrent positive and negative (solvent or vehicle) controls both with and without metabolic activation must be included in each experiment. When metabolic activation is used, the positive control chemical must be the one that requires activation to give a mutagenic response.

(B) Positive controls must employ a known clastogen at exposure levels expected to give a reproducible and detectable increase over background which demonstrates the sensitivity of the test system. Positive control concentrations should be chosen so that the effects are clear but do not immediately reveal the identity of the coded slides to the reader. Examples of positive-control substances include:

Metabolic activation condition	Chemical	CAS number
Absence of exogenous metabolic activation.	Methyl methanesulfonate.	[66–27–3]
	Ethyl methanesulfonate	[62–50–0]
	Ethylnitrosourea	[759–73–9]
	Mitomycin C	[50–07–7]
	4-Nitroquinoline-N-Oxide.	[56–57–5]
Presence of exogenous metabolic activation.	Benzo(a)pyrene	[50–32–8]
	Cyclophosphamide (monohydrate)	[50–18–0] ([6055–19–2])

(C) Other appropriate positive control substances may be used. The use of chemical class-related positive-control chemicals may be considered, when available.

(D) Negative controls, consisting of solvent or vehicle alone in the treatment medium, and treated in the same way as the treatment cultures, must be included for every harvest time. In addition, untreated controls should also be used unless there are historical-control data demonstrating that no deleterious or mutagenic effects are induced by the chosen solvent.

(g) *Procedure*—(1) *Treatment with test substance*. (i) Proliferating cells are treated with the test substance in the presence and absence of a metabolic-activation system. Treatment of lymphocytes should commence at about 48 hours after mitogenic stimulation.

(ii) Duplicate cultures must be used at each concentration, and are strongly recommended for negative/solvent control cultures. Where minimal variation between duplicate cultures can be demonstrated (the test techniques described in the references under paragraphs (i)(13) and (i)(14) of this section may be used), from historical data, it may be acceptable for single cultures to be used at each concentration.

(iii) Gaseous or volatile substances should be tested by appropriate methods, such as in sealed culture vessels (the test techniques described in the references under paragraphs (i)(15) and (i)(16) of this section may be used).

(2) *Culture harvest time*. In the first experiment, cells should be exposed to the test substance both with and without metabolic activation for 3–6 hours, and sampled at a time equivalent to about 1.5 normal cell-cycle length after the beginning of treatment (the test techniques described in the references under paragraph (i)(12) of this section may be used). If this protocol gives negative results both with and without activation, an additional experiment without activation should be done, with continuous treatment until sampling at a time equivalent to about 1.5 normal cell-cycle lengths. Certain chemicals may be more readily detected by treatment/sampling times longer than 1.5 cycle lengths. Negative results with metabolic activation need to be confirmed on a case-by-case basis. In those cases where confirmation of negative results is not considered necessary, justification should be provided.

(3) *Chromosome preparation*. Cell cultures must be treated with Colcemid® or colchicine usually for 1 to 3 hours prior to harvesting. Each cell culture must be harvested and processed separately for the preparation of chromosomes. Chromosome preparation involves hypotonic treatment of the cells, fixation and staining.

(4) *Analysis.* (i) All slides, including those of positive and negative controls, must be independently coded before microscopic analysis. Since fixation procedures often result in the breakage of a proportion of metaphase cells with loss of chromosomes, the cells scored must therefore contain a number of centromeres equal to the modal number ±2 for all cell types. At least 200 well-spread metaphases should be scored per concentration and control equally divided amongst the duplicates, if applicable. This number can be reduced when high numbers of aberrations are observed.

(ii) Though the purpose of the test is to detect structural chromosome aberrations, it is important to record polyploidy and endoreduplication when these events are seen.

(h) *Data and reporting*—(1) *Treatment of results.* (i) The experimental unit is the cell, and therefore the percentage of cells with structural chromosome aberration(s) should be evaluated. Different types of structural chromosome aberrations must be listed with their numbers and frequencies for experimental and control cultures. Gaps are recorded separately and reported but generally not included in the total aberration frequency.

(ii) Concurrent measures of cytotoxicity for all treated and negative control cultures in the main aberration experiment(s) should also be recorded.

(iii) Individual culture data should be provided. Additionally, all data should be summarized in tabular form.

(iv) There is no requirement for verification of a clear positive response. Equivocal results should be clarified by further testing preferably using modification of experimental conditions. The need to confirm negative results has been discussed in paragraph (g)(2) of this section. Modification of study parameters to extend the range of conditions assessed should be considered in follow-up experiments. Study parameters that might be modified include the concentration spacing and the metabolic activation conditions.

(2) *Evaluation and interpretation of results.* (i) There are several criteria for determining a positive result, such as a concentration-related increase or a reproducible increase in the number of cells with chromosome aberrations. Biological relevance of the results should be considered first. Statistical methods may be used as an aid in evaluating the test results (see paragraphs (i)(3) and (i)(13) of this section). Statistical significance should not be the only determining factor for a positive response.

(ii) An increase in the number of polyploid cells may indicate that the test substance has the potential to inhibit mitotic processes and to induce numerical chromosome aberrations. An increase in the number of cells with endoreduplicated chromosomes may indicate that the test substance has the potential to inhibit cell-cycle progression (the test techniques described in the references under paragraphs (i)(17) and (i)(18) of this section may be used).

(iii) A test substance for which the results do not meet the criteria in paragraphs (h)(2)(i) and (h)(2)(ii) of this section is considered nonmutagenic in this system.

(iv) Although most experiments will give clearly positive or negative results, in rare cases the data set will preclude making a definite judgement about the activity of the test substance. Results may remain equivocal or questionable regardless of the number of times the experiment is repeated.

(v) Positive results from the *in vitro* chromosome aberration test indicate that the test substance induces structural chromosome aberrations in cultured mammalian somatic cells. Negative results indicate that, under the test conditions, the test substance does not induce chromosome aberrations in cultured mammalian somatic cells.

(3) *Test report.* The test report must include the following information.

(i) Test substance.

(A) Identification data and CAS no., if known.

(B) Physical nature and purity.

(C) Physicochemical properties relevant to the conduct of the study.

(D) Stability of the test substance, if known.

(ii) Solvent/vehicle.

(A) Justification for choice of solvent/vehicle.

(B) Solubility and stability of the test substance in solvent/vehicle, if known.

(iii) Cells.

(A) Type and source of cells.

(B) Karyotype features and suitability of the cell type used.

(C) Absence of *Mycoplasma*, if applicable.

(D) Information on cell-cycle length.

(E) Sex of blood donors, whole blood or separated lymphocytes, mitogen used.

(F) Number of passages, if applicable.

(G) Methods for maintenance of cell cultures if applicable.

(H) Modal number of chromosomes.

(iv) Test conditions.

(A) Identity of metaphase arresting substance, its concentration and duration of cell exposure.

(B) Rationale for selection of concentrations and number of cultures including, e.g., cytotoxicity data and solubility limitations, if available.

(C) Composition of media, CO^2 concentration if applicable.

(D) Concentration of test substance.

(E) Volume of vehicle and test substance added.

(F) Incubation temperature.

(G) Incubation time.

(H) Duration of treatment.

(I) Cell density at seeding, if appropriate.

(J) Type and composition of metabolic activation system, including acceptability criteria.

(K) Positive and negative controls.

(L) Methods of slide preparation.

(M) Criteria for scoring aberrations.

(N) Number of metaphases analyzed.

(O) Methods for the measurements of toxicity.

(P) Criteria for considering studies as positive, negative or equivocal.

(v) Results.

(A) Signs of toxicity, e.g., degree of confluency, cell-cycle data, cell counts, mitotic index.

(B) Signs of precipitation.

(C) Data on pH and osmolality of the treatment medium, if determined.

(D) Definition for aberrations, including gaps.

(E) Number of cells with chromosome aberrations and type of chromosome aberrations given separately for each treated and control culture.

(F) Changes in ploidy if seen.

(G) Dose-response relationship, where possible.

(H) Statistical analyses, if any.

(I) Concurrent negative (solvent/vehicle) and positive control data.

(J) Historical negative (solvent/vehicle) and positive control data, with ranges, means and standard deviations.

(vi) Discussion of the results.

(vii) Conclusion.

(i) *References*. For additional background information on this test guideline, the following references should be consulte. These references are available at the addresses in § 700.17(b)(1) and (2) of this chapter.

(1) Evans, H.J. Cytological Methods for Detecting Chemical Mutagens. Chemical Mutagens, Principles and Methods for their Detection, Vol. 4, Hollaender, A. Ed. Plenum Press, New York and London, pp. 1-29 (1976).

(2) Ishidate, M. Jr. and Sofuni, T. The *In Vitro* Chromosomal Aberration Test Using Chinese Hamster Lung (CHL) Fibroblast Cells in Culture. Progress in Mutation Research, Vol. 5, Ashby, J. et al., Eds. Elsevier Science Publishers, Amsterdam-New York-Oxford, pp. 427–432 (1985).

(3) Galloway, S.M. et al. Chromosome aberration and sister chromatid exchanges in Chinese hamster ovary cells: Evaluation of 108 chemicals. *Environmental and Molecular Mutagenesis* 10 (suppl. 10), 1–175 (1987).

(4) Scott, D. et al. Genotoxicity under Extreme Culture Conditions. A report from ICPEMC Task Group 9. *Mutation Research* 257, 147–204 (1991).

(5) Morita, T. et al. Clastogenicity of Low pH toVarious Cultured Mammalian Cells. *Mutation Research* 268, 297-305 (1992).

(6) Ames, B.N., McCann, J. and Yamasaki, E. Methods for Detecting Carcinogens and Mutagens with the Salmonella/Mammalian Microsome Mutagenicity Test. *Mutation Research* 31, 347–364 (1975).

(7) Maron, D.M. and Ames, B.N. Revised Methods for the Salmonella Mutagenicity Test. *Mutation Research* 113, 173-215 (1983).

(8) Natarajan, A.T. et al. Cytogenetic Effects of Mutagens/Carcinogens after Activation in a Microsomal System In

Vitro, I. Induction of Chromosome Aberrations and Sister Chromatid Exchanges by Diethylnitrosamine (DEN) and Dimethylnitrosamine (DMN) in CHO Cells in the Presence of Rat-Liver Microsomes. *Mutation Research* 37, 83–90 (1976).

(9) Matsuoka, A., Hayashi, M. and Ishidate, M., Jr. Chromosomal Aberration Tests on 29 Chemicals Combined with S9 Mix In Vitro. *Mutation Research* 66, 277–290 (1979).

(10) Elliot, B.M. et al. Report of UK Environmental Mutagen Society Working Party. Alternatives to Aroclor 1254-induced S9 in In Vitro Genotoxicity Assays. *Mutagenesis* 7, 175–177 (1992).

(11) Matsushima, T. et al. A Safe Substitute for Polychlorinated Biphenyls as an Inducer of Metabolic Activation Systems. de Serres, F.J., Fouts, J.R., Bend, J.R. and Philpot, R.M. Eds. In Vitro Metabolic Activation in Mutagenesis Testing, Elsevier, North-Holland, pp. 85–88 (1976).

(12) Galloway, S.M. et al. Report from Working Group on In Vitro Tests for Chromosomal Aberrations. *Mutation Research* 312, 241–261 (1994).

(13) Richardson, C. et al. Analysis of Data from In Vitro Cytogenetic Assays. Statistical Evaluation of Mutagenicity Test Data. Kirkland, D.J., Ed. Cambridge University Press, Cambridge, pp. 141–154 (1989).

(14) Soper, K.A. and Galloway S.M. Replicate Flasks are not Necessary for In Vitro Chromosome Aberration Assays in CHO Cells. *Mutation Research* 312, 139–149 (1994).

(15) Krahn, D.F., Barsky, F.C. and McCooey, K.T. CHO/HGPRT Mutation Assay: Evaluation of Gases and Volatile Liquids. Tice, R.R., Costa, D.L., Schaich, K.M. Eds. Genotoxic Effects of Airborne Agents. New York, Plenum, pp. 91–103 (1982).

(16) Zamora, P.O. et al. Evaluation of an Exposure System Using Cells Grown on Collagen Gels for Detecting Highly Volatile Mutagens in the CHO/HGPRT Mutation Assay. *Environmental Mutagenesis* 5, 795–801 (1983).

(17) Locke-Huhle, C. Endoreduplication in Chinese hamster cells during alpha-radiation induced G2 arrest. *Mutation Research* 119, 403-413 (1983).

(18) Huang, Y., Change, C. and Trosko, J.E. Aphidicolin—induced endoreduplication in Chinese hamster cells. *Cancer Research* 43, 1362–1364 (1983).

[65 FR 78807, Dec. 15, 2000, as amended at 77 FR 46294, Aug. 3, 2012]

§ 799.9538 TSCA mammalian bone marrow chromosomal aberration test.

(a) *Scope*. This section is intended to meet the testing requirements under section 4 of TSCA. The mammalian bone marrow chromosomal aberration test is used for the detection of structural chromosome aberrations induced by test compounds in bone marrow cells of animals, usually rodents. Structural chromosome aberrations may be of two types, chromosome or chromatid. An increase in polyploidy may indicate that a chemical has the potential to induce numerical aberrations. With the majority of chemical mutagens, induced aberrations are of the chromatid-type, but chromosome-type aberrations also occur. Chromosome mutations and related events are the cause of many human genetic diseases and there is substantial evidence that chromosome mutations and related events causing alterations in oncogenes and tumor suppressor genes are involved in cancer in humans and experimental systems.

(b) *Source*. The source material used in developing this TSCA test guideline is the OECD guideline 475 (February 1997). This source is available at the address in paragraph (g) of this section.

(c) *Definitions*. The following definitions apply to this section:

Chromatid-type aberration is structural chromosome damage expressed as breakage of single chromatids or breakage and reunion between chromatids.

Chromosome-type aberration is structural chromosome damage expressed as breakage, or breakage and reunion, of both chromatids at an identical site.

Endoreduplication is a process in which after an S period of DNA replication, the nucleus does not go into mitosis but starts another S period. The result is chromosomes with 2,4,8,...chromatids.

Gap is an achromatic lesion smaller than the width of one chromatid, and

with minimum misalignment of the chromatids.

Numerical aberration is a change in the number of chromosomes from the normal number characteristic of the animals utilized.

Polyploidy is a multiple of the haploid chromosome number (n) other than the diploid number (i.e., 3n, 4n and so on).

Structural aberration is a change in chromosome structure detectable by microscopic examination of the metaphase stage of cell division, observed as deletions and fragments, intrachanges or interchanges.

(d) *Initial considerations.* (1) Rodents are routinely used in this test. Bone marrow is the target tissue in this test, since it is a highly vascularised tissue, and it contains a population of rapidly cycling cells that can be readily isolated and processed. Other species and target tissues are not the subject of this section.

(2) This chromosome aberration test is especially relevant to assessing mutagenic hazard in that it allows consideration of factors of *in vivo* metabolism, pharmacokinetics and DNA-repair processes although these may vary among species and among tissues. An *in vivo* test is also useful for further investigation of a mutagenic effect detected by an *in vitro* test.

(3) If there is evidence that the test substance, or a reactive metabolite, will not reach the target tissue, it is not appropriate to use this test.

(e) *Test method*—(1) *Principle.* Animals are exposed to the test substance by an appropriate route of exposure and are sacrificed at appropriate times after treatment. Prior to sacrifice, animals are treated with a metaphase-arresting agent (e.g., colchicine or Colcemid®). Chromosome preparations are then made from the bone marrow cells and stained, and metaphase cells are analyzed for chromosome aberrations.

(2) *Description*—(i) *Preparations*—(A) *Selection of animal species.* Rats, mice and Chinese hamsters are commonly used, although any appropriate mammalian species may be used. Commonly used laboratory strains of young healthy adult animals should be employed. At the commencement of the study, the weight variation of animals should be minimal and not exceed ±20% of the mean weight of each sex.

(B) *Housing and feeding conditions.* The temperature in the experimental animal room should be 22 °C ±3 °C). Although the relative humidity should be at least 30% and preferably not exceed 70% other than during room cleaning, the aim should be 50–60%. Lighting should be artificial, the sequence being 12 hrs light, 12 hrs dark. For feeding, conventional laboratory diets may be used with an unlimited supply of drinking water. The choice of diet may be influenced by the need to ensure a suitable admixture of a test substance when administered by this method. Animals may be housed individually, or be caged in small groups of the same sex.

(C) *Preparation of the animals.* Healthy young adult animals shall be randomly assigned to the control and treatment groups. Cages should be arranged in such a way that possible effects due to cage placement are minimized. The animals are identified uniquely. The animals are acclimated to the laboratory conditions for at least 5 days.

(D) *Preparation of doses.* Solid test substances shall be dissolved or suspended in appropriate solvents or vehicles and diluted, as appropriate, prior to dosing of the animals. Liquid test substances may be dosed directly or diluted prior to dosing. Fresh preparations of the test substance should be employed unless stability data demonstrate the acceptability of storage.

(ii) *Test conditions*—(A) *Solvent/vehicle.* The solvent/vehicle shall not produce toxic effects at the dose levels used, and shall not be suspected of chemical reaction with the test substance. If other than well-known solvents/vehicles are used, their inclusion should be supported with data indicating their compatibility. It is recommended that wherever possible, the use of an aqueous solvent/vehicle should be considered first.

(B) *Controls.* (*1*) Concurrent positive and negative (solvent/vehicle) controls shall be included for each sex in each test. Except for treatment with the test substance, animals in the control

groups should be handled in an identical manner to the animals in the treated groups.

(*2*) Positive controls shall produce structural chromosome aberrations *in vivo* at exposure levels expected to give a detectable increase over background. Positive control doses should be chosen so that the effects are clear but do not immediately reveal the identity of the coded slides to the reader. It is acceptable that the positive control be administered by a route different from the test substance and sampled at only a single time. The use of chemical class related positive control chemicals may be considered, when available. Examples of positive control substances include:

Chemical	CAS No.
Triethylenemelamine	[CAS no. 51–18–3]
Ethyl methanesulphonate	[CAS no. 62–50–0]
Ethyl nitrosourea	[CAS no. 759–73–9]
Mitomycin C	[CAS no. 50–07–7]
Cyclophosphamide (monohydrate)	[CAS no. 50–18–0]
	[CAS no. 6055–19–2]

(*3*) Negative controls, treated with solvent or vehicle alone, and otherwise treated in the same way as the treatment groups, shall be included for every sampling time, unless acceptable inter-animal variability and frequencies of cells with chromosome aberrations are available from historical control data. If single sampling is applied for negative controls, the most appropriate time is the first sampling time. In the absence of historical or published control data demonstrating that no deleterious or mutagenic effects are induced by the chosen solvent/vehicle, untreated animals should be used.

(3) *Procedure*—(i) *Number and sex of animals*. Each treated and control group shall include at least 5 analyzable animals per sex. If at the time of the study there are data available from studies in the same species and using the same route of exposure that demonstrate that there are no substantial differences in toxicity between sexes, then testing in a single sex will be sufficient. Where human exposure to chemicals may be sex-specific, as for example with some pharmaceutical agents, the test should be performed with animals of the appropriate sex.

(ii) *Treatment schedule*. (A) Test substances are preferably administered as a single treatment. Test substances may also be administered as a split dose, i.e. two treatments on the same day separated by no more than a few hrs, to facilitate administering a large volume of material. Other dose regimens should be scientifically justified.

(B) Samples shall be taken at two separate times following treatment on one day. For rodents, the first sampling interval is 1.5 normal cell cycle length (the latter being normally 12–18 hr) following treatment. Since the time required for uptake and metabolism of the test substance as well as its effect on cell cycle kinetics can affect the optimum time for chromosome aberration detection, a later sample collection 24 hr after the first sample time is recommended. If dose regimens of more than one day are used, one sampling time at 1.5 normal cell cycle lengths after the final treatment should be used.

(C) Prior to sacrifice, animals shall be injected intraperitoneally with an appropriate dose of a metaphase arresting agent (e.g. Colcemid® or colchicine). Animals are sampled at an appropriate interval thereafter. For mice this interval is approximately 3–5 hrs; for Chinese hamsters this interval is approximately 4–5 hrs. Cells shall be harvested from the bone marrow and analyzed from chromosome aberrations.

(iii) *Dose levels*. If a range finding study is performed because there are no suitable data available, it shall be performed in the same laboratory, using the same species, strain, sex, and treatment regimen to be used in the main study (an approach to dose selection is presented in the reference under paragraph (g)(5) of this section). If there is toxicity, three dose levels shall be used for the first sampling time. These dose levels shall cover a range from the maximum to little or no toxicity. At the later sampling time only the highest dose needs to be used. The highest dose is defined as the dose producing signs of toxicity such that higher dose levels, based on the same dosing regimen, would be expected to produce lethality. Substances with specific biological activities at low non-

toxic doses (such as hormones and mitogens) may be exceptions to the dose-setting criteria and should be evaluated on a case-by-case basis. The highest dose may also be defined as a dose that produces some indication of toxicity in the bone marrow (e.g. greater than 50% reduction in mitotic index).

(iv) *Limit test*. If a test at one dose level of at least 2,000 mg/kg body weight using a single treatment, or as two treatments on the same day, produces no observable toxic effects, and if genotoxicity would not be expected based on data from structurally related compounds, then a full study using three dose levels may not be considered necessary. For studies of a longer duration, the limit dose is 2,000 mg/kg/body weight/day for treatment up to 14 days, and 1,000 mg/kg/body weight/day for treatment longer than 14 days. Expected human exposure may indicate the need for a higher dose level to be used in the limit test.

(v) *Administration of doses*. The test substance is usually administered by gavage using a stomach tube or a suitable intubation cannula, or by intraperitoneal injection. Other routes of exposure may be acceptable where they can be justified. The maximum volume of liquid that can be administered by gavage or injection at one time depends on the size of the test animal. The volume should not exceed 2 ml/100g body weight. The use of volumes higher than these must be justified. Except for irritating or corrosive substances which will normally reveal exacerbated effects with higher concentrations, variability in test volume should be minimized by adjusting the concentration to ensure a constant volume at all dose levels.

(vi) *Chromosome preparation*. Immediately after sacrifice, bone marrow shall be obtained, exposed to hypotonic solution and fixed. The cells shall be then spread on slides and stained.

(vii) *Analysis*. (A) The mitotic index should be determined as a measure of cytotoxicity in at least 1,000 cells per animal for all treated animals (including positive controls) and untreated negative control animals.

(B) At least 100 cells should be analyzed for each animal. This number could be reduced when high numbers of aberrations are observed. All slides, including those of positive and negative controls, shall be independently coded before microscopic analysis. Since slide preparation procedures often result in the breakage of a proportion of metaphases with loss of chromosomes, the cells scored should therefore contain a number of centromeres equal to the number 2n ±2.

(f) *Data and reporting*—(1) *Treatment of results*. Individual animal data shall be presented in tabular form. The experimental unit is the animal. For each animal the number of cells scored, the number of aberrations per cell and the percentage of cells with structural chromosome aberration(s) shall be evaluated. Different types of structural chromosome aberrations shall be listed with their numbers and frequencies for treated and control groups. Gaps shall be recorded separately and reported but generally not included in the total aberration frequency. If there is no evidence for a difference in response between the sexes, the data may be combined for statistical analysis.

(2) *Evaluation and interpretation of results*. (i) There are several criteria for determining a positive result, such as a dose-related increase in the relative number of cells with chromosome aberrations or a clear increase in the number of cells with aberrations in a single dose group at a single sampling time. Biological relevance of the results should be considered first. Statistical methods may be used as an aid in evaluating the test results (some statistical methods are described in the reference under paragraph (g)(6) of this section). Statistical significance should not be the only determining factor for a positive response. Equivocal results should be clarified by further testing preferably using a modification of experimental conditions.

(ii) An increase in polyploidy may indicate that the test substance has the potential to induce numerical chromosome aberrations. An increase in endoreduplication may indicate that the test substance has the potential to inhibit cell cycle progression. This phenomenon is described in the references under paragraphs (g)(7) and (g)(8) of this section.

(iii) A test substance for which the results do not meet the criteria described in paragraph (f)(2)(i) of this section is considered non-mutagenic in this test.

(iv) Although most experiments will give clearly positive or negative results, in rare cases the data set will preclude making a definite judgment about the activity of the test substance. Results may remain equivocal or questionable regardless of the number of experiments performed.

(v) Positive results from the *in vivo* chromosome aberration test indicate that a substance induces chromosome aberrations in the bone marrow of the species tested. Negative results indicate that, under the test conditions, the test substance does not induce chromosome aberrations in the bone marrow of the species tested.

(vi) The likelihood that the test substance or its metabolites reach the general circulation or specifically the target tissue (e.g., systemic toxicity) should be discussed.

(3) *Test report*. The test report shall include the following information:

(i) Test substance:

(A) Identification data and CAS No., if known.

(B) Physical nature and purity.

(C) Physicochemical properties relevant to the conduct of the study.

(D) Stability of the test substance, if known.

(ii) Solvent/vehicle:

(A) Justification for choice of vehicle.

(B) Solubility and stability of the test substance in solvent/vehicle, if known.

(iii) Test animals:

(A) Species/strain used.

(B) Number, age and sex of animals.

(C) Source, housing conditions, diet, etc.

(D) Individual weight of the animals at the start of the test, including body weight range, mean and standard deviation for each group.

(iv) Test conditions:

(A) Positive and negative (vehicle/solvent) controls.

(B) Data from range-finding study, if conducted.

(C) Rationale for dose level selection.

(D) Details of test substance preparation.

(E) Details of the administration of the test substance.

(F) Rationale for route of administration.

(G) Methods for verifying that the test substance reached the general circulation or target tissue, if applicable.

(H) Conversion from diet/drinking water test substance concentration parts per million (ppm) to the actual dose (mg/kg body weight/day), if applicable.

(I) Details of food and water quality.

(J) Detailed description of treatment and sampling schedules.

(K) Methods for measurement of toxicity.

(L) Identity of metaphase arresting substance, its concentration and duration of treatment.

(M) Methods of slide preparation.

(N) Criteria for scoring aberrations.

(O) Number of cells analyzed per animal.

(P) Criteria for considering studies as positive, negative or equivocal.

(v) Results:

(A) Signs of toxicity.

(B) Mitotic index.

(C) Type and number of aberrations, given separately for each animal.

(D) Total number of aberrations per group with means and standard deviations.

(E) Number of cells with aberrations per group with means and standard deviations.

(F) Changes in ploidy, if seen.

(G) Dose-response relationship, where possible.

(H) Statistical analyses, if any.

(I) Concurrent negative control data.

(J) Historical negative control data with ranges, means and standard deviations.

(K) Concurrent positive control data.

(vi) Discussion of the results.

(vii) Conclusion.

(g) *References*. For additional background information on this test guideline, the following references should be consulted. These references are available at the addresses in § 700.17(b)(1) and (2) of this chapter.

(1) Adler, I.D. Eds. S. Venitt and J.M. Parry. Cytogenetic Tests in Mammals.

Mutagenicity Testing: A Practical Approach. (IRL Press, Oxford, Washington DC, 1984) pp. 275–306.

(2) Preston, R.J., Dean, B.J., Galloway, S., Holden, H., McFee, A.F., and Shelby, M. Mammalian *In Vivo* Cytogenetic Assays: Analysis of Chromosome Aberrations in Bone Marrow Cells. *Mutation Research*. 189, 157–165 (1987).

(3) Richold, M., Chandley, A., Ashby, J., Gatehouse, D.G., Bootman, J., and Henderson, L. Ed. D.J. Kirkland. *In Vivo* Cytogenetic Assays. *Basic Mutagenicity Tests, UKEMS Recommended Procedures*. UKEMS Subcommittee on Guidelines for Mutagenicity Testing. Report. Part I revised. (Cambridge University Press, Cambridge, NY, Port Chester, Melbourne, Sydney, 1990) pp. 115–141.

(4) Tice, R.R., Hayashi, M., MacGregor, J.T., Anderson, D., Blakey, D.H., Holden, H.E., Kirsch-Volders, M., Oleson Jr., F.B., Pacchierotti, F., Preston, R.J., Romagna, F., Shimada, H., Sutou, S., and Vannier, B. Report from the Working Group on the *In Vivo* Mammalian Bone Marrow Chromosomal Aberration Test. *Mutation Research*. 312, 305–312 (1994).

(5) Fielder, R.J., Allen, J.A., Boobis, A.R., Botham, P.A., Doe, J., Esdaile, D.J., Gatehouse, D.G., Hodson-Walker, G., Morton, D.B., Kirkland, D. J., and Richold, M. Report of British Toxicology Society/UK Environmental Mutagen Society Working Group: Dose Setting in *In Vivo* Mutagenicity Assays. *Mutagenesis*. 7, 313–319 (1992).

(6) Lovell, D.P., Anderson, D., Albanese, R., Amphlett, G.E., Clare, G., Ferguson, R., Richold, M., Papworth, D.G., and Savage, J.R.K. Ed. Kirkland,D. J. Statistical Analysis of *In Vivo* Cytogenetic Assays. UKEMS Sub-Committee on Guidelines for Mutagenicity Testing. Report Part III. Statistical Evaluation of Mutagenicity Test Data (Cambridge University Press, Cambridge, 1989) pp. 184–232.

(7) Locke-Huhle, C. Endoreduplication in Chinese Hamster Cells During Alpha-Radiation Induced G2 Arrest. *Mutation Research*. 119, 403–413 (1983).

(8) Huang, Y., Change, C., and Trosko, J. E. Aphidicolin-Induced Endoreduplication in Chinese Hamster Cells. *Cancer Research*. 43, 1362–1364 (1983).

[62 FR 43824, Aug. 15, 1997, as amended at 64 FR 35079, June 30, 1999; 77 FR 46294, Aug. 3, 2012]

§ 799.9539 TSCA mammalian erythrocyte micronucleus test.

(a) *Scope*. This section is intended to meet the testing requirements under section 4 of TSCA.

(1) The mammalian erythrocyte micronucleus test is used for the detection of damage induced by the test substance to the chromosomes or the mitotic apparatus of erythroblasts by analysis of erythrocytes as sampled in bone marrow and/or peripheral blood cells of animals, usually rodents.

(2) The purpose of the micronucleus test is to identify substances that cause cytogenetic damage which results in the formation of micronuclei containing lagging chromosome fragments or whole chromosomes.

(3) When a bone marrow erythroblast develops into a polychromatic erythrocyte, the main nucleus is extruded; any micronucleus that has been formed may remain behind in the otherwise anucleated cytoplasm. Visualization of micronuclei is facilitated in these cells because they lack a main nucleus. An increase in the frequency of micronucleated polychromatic erythrocytes in treated animals is an indication of induced chromosome damage.

(b) *Source*. The source material used in developing this TSCA test guideline is the OECD guideline 474 (February 1997). This source is available at the address in paragraph (g) of this section.

(c) *Definitions*. The following definitions apply to this section:

Centromere (kinetochore) is a region of a chromosome with which spindle fibers are associated during cell division, allowing orderly movement of daughter chromosomes to the poles of the daughter cells.

Micronuclei are small nuclei, separate from and additional to the main nuclei of cells, produced during telophase of mitosis (meiosis) by lagging chromosome fragments or whole chromosomes.

Normochromatic erythrocyte is a mature erythrocyte that lacks ribosomes

and can be distinguished from immature, polychromatic erythrocytes by stains selective for ribosomes.

Polychromatic erythrocyte is an immature erythrocyte, in an intermediate stage of development, that still contains ribosomes and therefore can be distinguished from mature, normochromatic erythrocytes by stains selective for ribosomes.

(d) *Initial considerations.* (1) The bone marrow of rodents is routinely used in this test since polychromatic erythrocytes are produced in that tissue. The measurement of micronucleated immature (polychromatic) erythrocytes in peripheral blood is equally acceptable in any species in which the inability of the spleen to remove micronucleated erythrocytes has been demonstrated, or which has shown an adequate sensitivity to detect agents that cause structural or numerical chromosome aberrations. Micronuclei can be distinguished by a number of criteria. These include identification of the presence or absence of a kinetochore or centromeric DNA in the micronuclei. The frequency of micronucleated immature (polychromatic) erythrocytes is the principal endpoint. The number of mature (normochromatic) erythrocytes in the peripheral blood that contain micronuclei among a given number of mature erythrocytes can also be used as the endpoint of the assay when animals are treated continuously for 4 weeks or more. This mammalian *in vivo* micronucleus test is especially relevant to assessing mutagenic hazard in that it allows consideration of factors of *in vivo* metabolism, pharmacokinetics and DNA-repair processes although these may vary among species, among tissues and among genetic endpoints. An *in vivo* assay is also useful for further investigation of a mutagenic effect detected by an *in vitro* system.

(2) If there is evidence that the test substance, or a reactive metabolite, will not reach the target tissue, it is not appropriate to use this test.

(e) *Test method*—(1) *Principle.* Animals are exposed to the test substance by an appropriate route. If bone marrow is used, the animals are sacrificed at appropriate times after treatment, the bone marrow extracted, and preparations made and stained (test techniques described in the references under paragraphs (g)(1), (g)(2), and (g)(3) of this section may be used). When peripheral blood is used, the blood is collected at appropriate times after treatment and smear preparations are made and stained (the test techniques described in the references under paragraphs (g)(3), (g)(4), (g)(5), and (g)(6) of this section may be used). For studies with peripheral blood, as little time as possible should elapse between the last exposure and cell harvest. Preparations are analyzed for the presence of micronuclei.

(2) *Description*—(i) *Preparations*—(A) *Selection of animal species.* Mice or rats are recommended if bone marrow is used, although any appropriate mammalian species may be used. When peripheral blood is used, mice are recommended. However, any appropriate mammalian species may be used provided it is a species in which the spleen does not remove micronucleated erythrocytes or a species which has shown an adequate sensitivity to detect agents that cause structural or numerical chromosome aberrations. Commonly used laboratory strains of young healthy animals should be employed. At the commencement of the study, the weight variation of animals should be minimal and not exceed ±20% of the mean weight of each sex.

(B) *Housing and feeding conditions.* The temperature in the experimental animal room should be 22 °C ±3 °C). Although the relative humidity should be at least 30% and preferably not exceed 70% other than during room cleaning, the aim should be 50–60%. Lighting should be artificial, the sequence being 12 hrs light, 12 hrs dark. For feeding, conventional laboratory diets may be used with an unlimited supply of drinking water. The choice of diet may be influenced by the need to ensure a suitable admixture of a test substance when administered by this route. Animals may be housed individually, or caged in small groups of the same sex.

(C) *Preparation of the animals.* Healthy young adult animals shall be randomly assigned to the control and treatment groups. The animals are identified uniquely. The animals are

acclimated to the laboratory conditions for at least 5 days. Cages should be arranged in such a way that possible effects due to cage placement are minimized.

(D) *Preparation of doses.* Solid test substances shall be dissolved or suspended in appropriate solvents or vehicles and diluted, if appropriate, prior to dosing of the animals. Liquid test substances may be dosed directly or diluted prior to dosing. Fresh preparations of the test substance should be employed unless stability data demonstrate the acceptability of storage.

(ii) *Test conditions*—(A) *Solvent/vehicle.* The solvent/vehicle shall not produce toxic effects at the dose levels used, and shall not be suspected of chemical reaction with the test substance. If other than well-known solvents/vehicles are used, their inclusion should be supported with reference data indicating their compatibility. It is recommended that wherever possible, the use of an aqueous solvent/vehicle should be considered first.

(B) *Controls.* (*1*) Concurrent positive and negative (solvent/vehicle) controls shall be included for each sex in each test. Except for treatment with the test substance, animals in the control groups should be handled in an identical manner to animals of the treatment groups.

(*2*) Positive controls shall produce micronuclei *in vivo* at exposure levels expected to give a detectable increase over background. Positive control doses should be chosen so that the effects are clear but do not immediately reveal the identity of the coded slides to the reader. It is acceptable that the positive control be administered by a route different from the test substance and sampled at only a single time. In addition, the use of chemical class-related positive control chemicals may be considered, when available. Examples of positive control substances include:

Chemical	CAS No.
Ethyl methanesulphonate	[CAS no. 62–50–0]
Ethyl nitrosourea	[CAS no. 759–73–9]
Mitomycin C	[CAS no. 50–07–7]
Cyclophosphamide (monohydrate)	[CAS no. 50–18–0] [CAS no. 6055–19–2]
Triethylenemelamine	[CAS no. 51–18–3]

(*3*) Negative controls, treated with solvent or vehicle alone, and otherwise treated in the same way as the treatment groups shall be included for every sampling time, unless acceptable interanimal variability and frequencies of cells with micronuclei are demonstrated by historical control data. If single sampling is applied for negative controls, the most appropriate time is the first sampling time. In addition, untreated controls should also be used unless there are historical or published control data demonstrating that no deleterious or mutagenic effects are induced by the chosen solvent/vehicle.

(*4*) If peripheral blood is used, a pretreatment sample may also be acceptable as a concurrent negative control, but only in the short peripheral blood studies (e.g., one to three treatment(s)) when the resulting data are in the expected range for the historical control.

(3) *Procedure*—(i) *Number and sex of animals.* Each treated and control group shall include at least 5 analyzable animals per sex (techniques described in the reference under paragraph (g)(7) of this section may be used). If at the time of the study there are data available from studies in the same species and using the same route of exposure that demonstrate that there are no substantial differences between sexes in toxicity, then testing in a single sex will be sufficient. Where human exposure to chemicals may be sex-specific, as for example with some pharmaceutical agents, the test should be performed with animals of the appropriate sex.

(ii) *Treatment schedule.* (A) No standard treatment schedule (i.e. one, two, or more treatments at 24 h intervals) can be recommended. The samples from extended dose regimens are acceptable as long as a positive effect has been demonstrated for this study or, for a negative study, as long as toxicity has been demonstrated or the limit dose has been used, and dosing continued until the time of sampling. Test substances may also be administered as a split dose, i.e., two treatments on the same day separated by no more than a few hrs, to facilitate administering a large volume of material.

(B) The test may be performed in two ways:

(*1*) Animals shall be treated with the test substance once. Samples of bone marrow shall be taken at least twice, starting not earlier than 24 hrs after treatment, but not extending beyond 48 hrs after treatment with appropriate interval(s) between samples. The use of sampling times earlier than 24 hrs after treatment should be justified. Samples of peripheral blood shall be taken at least twice, starting not earlier than 36 hrs after treatment, with appropriate intervals following the first sample, but not extending beyond 72 hrs. When a positive response is recognized at one sampling time, additional sampling is not required.

(*2*) If two or more daily treatments are used (e.g. two or more treatments at 24 hr intervals), samples shall be collected once between 18 and 24 hrs following the final treatment for the bone marrow and once between 36 and 48 hrs following the final treatment for the peripheral blood (techniques described in the reference under paragraph (g)(8) of this section may be used).

(C) Other sampling times may be used in addition, when relevant.

(iii) *Dose levels*. If a range finding study is performed because there are no suitable data available, it shall be performed in the same laboratory, using the same species, strain, sex, and treatment regimen to be used in the main study (guidance on dose setting is provided in the reference in paragraph (g)(9) of this section). If there is toxicity, three dose levels shall be used for the first sampling time. These dose levels shall cover a range from the maximum to little or no toxicity. At the later sampling time only the highest dose needs to be used. The highest dose is defined as the dose producing signs of toxicity such that higher dose levels, based on the same dosing regimen, would be expected to produce lethality. Substances with specific biological activities at low non-toxic doses (such as hormones and mitogens) may be exceptions to the dose-setting criteria and should be evaluated on a case-by-case basis. The highest dose may also be defined as a dose that produces some indication of toxicity in the bone marrow (e.g. a reduction in the proportion of immature erythrocytes among total erythrocytes in the bone marrow or peripheral blood).

(iv) *Limit test*. If a test at one dose level of at least 2,000 mg/kg body weight using a single treatment, or as two treatments on the same day, produces no observable toxic effects, and if genotoxicity would not be expected based upon data from structurally related substances, then a full study using three dose levels may not be considered necessary. For studies of a longer duration, the limit dose is 2,000 mg/kg/body weight/day for treatment up to 14 days, and 1,000 mg/kg/body weight/day for treatment longer than 14 days. Expected human exposure may indicate the need for a higher dose level to be used in the limit test.

(v) *Administration of doses*. The test substance is usually administered by gavage using a stomach tube or a suitable intubation cannula, or by intraperitoneal injection. Other routes of exposure may be acceptable where they can be justified. The maximum volume of liquid that can be administered by gavage or injection at one time depends on the size of the test animal. The volume should not exceed 2 ml/100g body weight. The use of volumes higher than these must be justified. Except for irritating or corrosive substances which will normally reveal exacerbated effects with higher concentrations, variability in test volume should be minimized by adjusting the concentration to ensure a constant volume at all dose levels.

(vi) *Bone marrow/blood preparation*. Bone marrow cells shall be obtained from the femurs or tibias immediately following sacrifice. Cells shall be removed from femurs or tibias, prepared and stained using established methods. Peripheral blood is obtained from the tail vein or other appropriate blood vessel. Blood cells are immediately stained supravitally (the test techniques described in the references under paragraphs (g)(4), (g)(5), and (g)(6) of this section may be used) or smear preparations are made and then stained. The use of a DNA specific stain (e.g. acridine orange (techniques described in the reference under paragraph (g)(10) of this section may be used) or Hoechst 33258 plus pyronin-Y)

can eliminate some of the artifacts associated with using a non-DNA specific stain. This advantage does not preclude the use of conventional stains (e.g., Giemsa). Additional systems (e.g. cellulose columns to remove nucleated cells (the test techniques described in the references under paragraph (g)(12) of this section may be used)) can also be used provided that these systems have been shown to adequately work for micronucleus preparation in the laboratory.

(vii) *Analysis.* The proportion of immature among total (immature = mature) erythrocytes is determined for each animal by counting a total of at least 200 erythrocytes for bone marrow and 1,000 erythrocytes for peripheral blood (techniques described in the reference under paragraph (g)(13) of this section maybe used). All slides, including those of positive and negative controls, shall be independently coded before microscopic analysis. At least 2,000 immature erythrocytes per animal shall be scored for the incidence of micronucleated immature erythrocytes. Additional information may be obtained by scoring mature erythrocytes for micronuclei. When analyzing slides, the proportion of immature erythrocytes among total erythrocytes should not be less than 20% of the control value. When animals are treated continuously for 4 weeks or more, at least 2,000 mature erythrocytes per animal can also be scored for the incidence of micronuclei. Systems for automated analysis (image analysis) and cell suspensions (flow cytometry) are acceptable alternatives to manual evaluation if appropriately justified and validated.

(f) *Data and reporting*—(1) *Treatment of results.* Individual animal data shall be presented in tabular form. The experimental unit is the animal. The number of immature erythrocytes scored, the number of micronucleated immature erythrocytes, and the number of immature among total erythrocytes shall be listed separately for each animal analyzed. When animals are treated continuously for 4 weeks or more, the data on mature erythrocytes should also be given if it is collected. The proportion of immature among total erythrocytes and, if considered applicable, the percentage of micronucleated erythrocytes shall be given for each animal. If there is no evidence for a difference in response between the sexes, the data from both sexes may be combined for statistical analysis.

(2) *Evaluation and interpretation of results.* (i) There are several criteria for determining a positive result, such as a dose-related increase in the number of micronucleated cells or a clear increase in the number of micronucleated cells in a single dose group at a single sampling time. Biological relevance of the results should be considered first. Statistical methods may be used as an aid in evaluating the test results (the test techniques described in the references paragraphs (g)(14) and (g)(15) of this section may be used). Statistical significance should not be the only determining factor for a positive response. Equivocal results should be clarified by further testing preferably using a modification of experimental conditions.

(ii) A test substance for which the results do not meet the criteria in paragraph (f)(2)(i) of this section is considered non-mutagenic in this test.

(iii) Although most experiments will give clearly positive or negative results, in rare cases the data set will preclude making a definite judgement about the activity of the test substance. Results, may remain equivocal or questionable regardless of the number of times the experiment is repeated. Positive results in the micronucleus test indicate that a substance induces micronuclei which are the result of chromosomal damage or damage to the mitotic apparatus in the erythroblasts of the test species. Negative results indicate that, under the test conditions, the test substance does not produce micronuclei in the immature erythrocytes of the test species.

(iv) The likelihood that the test substance or its metabolites reach the general circulation or specifically the target tissue (e.g. systemic toxicity) should be discussed.

(3) *Test report.* The test report shall include the following information:

(i) Test substance:

(A) Identification data and CAS no., if known.

(B) Physical nature and purity.

(C) Physiochemical properties relevant to the conduct of the study.

(D) Stability of the test substance, if known.

(ii) Solvent/vehicle:

(A) Justification for choice of vehicle.

(B) Solubility and stability of the test substance in the solvent/vehicle, if known.

(iii) Test animals:

(A) Species/strain used.

(B) Number, age, and sex of animals.

(C) Source, housing conditions, diet, etc.

(D) Individual weight of the animals at the start of the test, including body weight range, mean and standard deviation for each group.

(iv) Test conditions:

(A) Positive and negative (vehicle/solvent) control data.

(B) Data from range-finding study, if conducted.

(C) Rationale for dose level selection.

(D) Details of test substance preparation.

(E) Details of the administration of the test substance.

(F) Rationale for route of administration.

(G) Methods for verifying that the test substance reached the general circulation or target tissue, if applicable.

(H) Conversion from diet/drinking water test substance concentration parts per million (ppm) to the actual dose (mg/kg body weight/day), if applicable.

(I) Details of food and water quality.

(J) Detailed description of treatment and sampling schedules.

(K) Methods of slide preparation.

(L) Methods for measurement of toxicity.

(M) Criteria for scoring micronucleated immature erythrocytes.

(N) Number of cells analyzed per animal.

(O) Criteria for considering studies as positive, negative or equivocal.

(v) Results:

(A) Signs of toxicity.

(B) Proportion of immature erythrocytes among total erythrocytes.

(C) Number of micronucleated immature erythrocytes, given separately for each animal.

(D) Mean = ±standard deviation of micronucleated immature erythrocytes per group.

(E) Dose-response relationship, where possible.

(F) Statistical analyses and method applied.

(G) Concurrent and historical negative control data.

(H) Concurrent positive control data.

(vi) Discussion of the results.

(vii) Conclusion.

(g) *References.* For additional background information on this test guideline, the following references should be consulted. These references are available at the addresses in § 700.17(b)(1) and (2) of this chapter.

(1) Heddle, J.A. A Rapid *In Vivo* Test for Chromosomal Damage. *Mutation Research*. 18, 187–190 (1973).

(2) Schmid, W. The Micronucleus Test. *Mutation Research*. 31, 9–15 (1975).

(3) Mavournin, K.H., Blakey, D.H., Cimino, M.C., Salamone, M.F., and Heddle, J.A. The *In Vivo* Micronucleus Assay in Mammalian Bone Marrow and Peripheral Blood. A report of the U.S. Environmental Protection Agency Gene-Tox Program. *Mutation Research*. 239, 29–80 (1990).

(4) Hayashi, M., Morita, T., Kodama, Y., Sofuni, T., and Ishidate, Jr., M. The Micronucleus Assay with Mouse Peripheral Blood Reticulocytes Using Acridine Orange-Coated Slides. *Mutation Research*. 245, 245–249 (1990).

(5) The Collaborative Study Group for the Micronucleus Test (1992). Micronucleus Test with Mouse Peripheral Blood Erythrocytes by Acridine Orange Supravital Staining: The Summary Report of the 5th Collaborative Study by CSGMT/JEMS. MMS. *Mutation Research*. 278, 83–98.

(6) The Collaborative Study Group for the Micronucleus Test (CSGMT/JEMMS.MMS, The Mammalian Mutagenesis Study Group of the Environmental Mutagen Society of Japan) Protocol recommended for the short-term mouse peripheral blood micronucleus test. *Mutagenesis*. 10, 153–159 (1995).

(7) Hayashi, M., Tice, R.R., MacGregor, J.T., Anderson, D., Blakey,

D.H., Kirsch-Volders, M., Oleson, Jr. F.B., Pacchierotti, F., Romagna, F., Shimada, H., Sutou, S., and Vannier, B. *In Vivo* Rodent Erythrocyte Micronucleus Assay. *Mutation Research*. 312, 293–304 (1994).

(8) Higashikuni, N. and Sutou, S. An optimal, generalized sampling time of 30 =/- 6 h after double dosing in the mouse peripheral blood micronucleus test. *Mutagenesis*. 10, 313–319 (1995).

(9) Fielder, R.J., Allen, J.A., Boobis, A.R., Botham, P.A., Doe, J., Esdaile, D.J., Gatehouse, D.G., Hodson-Walker, G., Morton, D.B., Kirkland, D. J., and Richold, M. Report of British Toxicology Society/UK Environmental Mutagen Society Working Group: Dose Setting in *In Vivo* Mutagenicity Assays. *Mutagenesis*. 7, 313–319 (1992).

(10) Hayashi, M., Sofuni, T., and Ishidate, Jr., M. An Application of Acridine Orange Fluorescent Staining to the Micronucleus Test. *Mutation Research*. 120, 241–247 (1983).

(11) MacGregor, J.T., Wehr, C.M., and Langlois, R.G. A Simple Fluorescent Staining Procedure for Micronuclei and RNA in Erythrocytes Using Hoechst 33258 and Pyronin Y. *Mutation Research*. 120, 269–275 (1983).

(12) Romagna, F. and Staniforth, C.D. The automated bone marrow micronucleus test. *Mutation Research*. 213, 91–104 (1989).

(13) Gollapudi, B. and McFadden, L.G. Sample size for the estimation of polychromatic to normochromatic eruthrocyte ratio in the bone marrow micronucleus test. *Mutation Research*. 347, 97–99 (1995).

(14) Richold, M., Ashby, J., Bootman, J., Chandley, A., Gatehouse, D.G., and Henderson, L. Ed. Kirkland, D.J. *In Vivo* Cytogenetics Assays. Basic Mutagenicity Tests, UKEMS Recommended Procedures. UKEMS Subcommittee on Guidelines for Mutagenicity Testing. Report. Part I revised (Cambridge University Press, Cambridge, New York, Port Chester, Melbourne, Sydney, 1990) pp. 115–141.

(15) Lovell, D.P., Anderson, D., Albanese, R., Amphlett, G.E., Clare, G., Ferguson, R., Richold, M., Papworth, D.G., and Savage, J.R.K. Ed. D.J. Kirkland. Statistical Analysis of *In Vivo* Cytogenetic Assays. Statistical Evaluation of Mutagenicity Test Data. UKEMS Sub-Committee on Guidelines for Mutagenicity Testing, Report, Part III. (Cambridge University Press, Cambridge, New York, Port Chester, Melbourne, Sydney, 1989) pp. 184–232.

(16) Heddle, J.A., Salamone, M.F., Hite, M., Kirkhart, B., Mavournin, K., MacGregor, J.G., and Newell, G.W. The Induction of Micronuclei as a Measure of Genotoxicity. *Mutation Research*. 123: 61–118 (1983).

(17) MacGregor, J.T., Heddle, J.A., Hite, M., Margolin, G.H., Ramel C., Salamone, M.F., Tice, R.R., and Wild, D. Guidelines for the Conduct of Micronucleus Assays in Mammalian Bone Marrow Erythrocytes. *Mutation Research*. 189: 103–112 (1987).

(18) MacGregor, J.T., Wehr, C.M., Henika, P.R., and Shelby, M.E. (1990). The *In Vivo* Erythrocyte Micronucleus Test: Measurement at Steady State Increases Assay Efficiency and Permits Integration with Toxicity Studies. *Fundamental Applied Toxicology*. 14: 513–522.

(19) MacGregor, J.T., Schlegel, R. Choy, W.N., and Wehr, C.M. Eds. Hayes, A.W., Schnell, R.C., and Miya, T.S. Micronuclei in Circulating Erythrocytes: A Rapid Screen for Chromosomal Damage During Routine Toxicity Testing in Mice. *Developments in Science and Practice of Toxicology* (Elsevier, Amsterdam, 1983) pp. 555–558.

[62 FR 43824, Aug. 15, 1997, as amended at 64 FR 35079, June 30, 1999; 77 FR 46294, Aug. 3, 2012]

§ 799.9620 TSCA neurotoxicity screening battery.

(a) *Scope*. This section is intended to meet the testing requirements under section 4 of TSCA. This neurotoxicity screening battery consists of a functional observational battery, motor activity, and neuropathology. The functional observational battery consists of noninvasive procedures designed to detect gross functional deficits in animals and to better quantify behavioral or neurological effects detected in other studies. The motor activity test uses an automated device that measures the level of activity of an individual animal. The neuropathological techniques are designed to provide data to detect and characterize

histopathological changes in the central and peripheral nervous system. This battery is designed to be used in conjunction with general toxicity studies and changes should be evaluated in the context of both the concordance between functional neurological and neuropatholgical effects, and with respect to any other toxicological effects seen. This test battery is not intended to provide a complete evaluation of neurotoxicity, and additional functional and morphological evaluation may be necessary to assess completely the neurotoxic potential of a chemical.

(b) *Source.* The source material used in developing this TSCA test guideline is the OPPTS harmonized test guideline 870.6200 (June 1996 Public Draft). This source is available at the address in paragraph (g) of this section.

(c) *Definitions.* The following definitions apply to this section.

ED is effective dose.

Motor activity is any movement of the experimental animal.

Neurotoxicity is any adverse effect on the structure or function of the nervous system related to exposure to a chemical substance.

Toxic effect is an adverse change in the structure or function of an experimental animal as a result of exposure to a chemical substance.

(d) *Principle of the test method.* The test substance is administered to several groups of experimental animals, one dose being used per group. The animals are observed under carefully standardized conditions with sufficient frequency to ensure the detection and quantification of behavioral and/or neurologic abnormalities, if present. Various functions that could be affected by neurotoxicants are assessed during each observation period. Measurements of motor activity of individual animals are made in an automated device. The animals are perfused and tissue samples from the nervous system are prepared for microscopic examination. The exposure levels at which significant neurotoxic effects are produced are compared to one another and to those levels that produce other toxic effects.

(e) *Test procedures*—(1) *Animal selection*—(i) *Species.* In general, the laboratory rat should be used. Under some circumstances, other species, such as the mouse or the dog, may be more appropriate, although not all of the battery may be adaptable to other species.

(ii) *Age.* Young adults (at least 42 days old for rats) shall be used.

(iii) *Sex.* Both males and females shall be used. Females shall be nulliparous and nonpregnant.

(2) *Number of animals.* At least 10 males and 10 females should be used in each dose and control group for behavioral testing. At least five males and five females should be used in each dose and control group for terminal neuropathology. If interim neuropathological evaluations are planned, the number should be increased by the number of animals scheduled to be perfused before the end of the study. Animals shall be randomly assigned to treatment and control groups.

(3) *Control groups.* (i) A concurrent (vehicle) control group is required. Subjects shall be treated in the same way as for an exposure group except that administration of the test substance is omitted. If the vehicle used has known or potential toxic properties, both untreated or saline treated and vehicle control groups are required.

(ii) Positive control data from the laboratory performing the testing shall provide evidence of the ability of the observational methods used to detect major neurotoxic endpoints including limb weakness or paralysis, tremor, and autonomic signs. Positive control data are also required to demonstrate the sensitivity and reliability of the activity-measuring device and testing procedures. These data should demonstrate the ability to detect chemically induced increases and decreases in activity. Positive control groups exhibiting central nervous system pathology and peripheral nervous system pathology are also required. Separate groups for peripheral and central neuropathology are acceptable (e.g. acrylamide and trimethyl tin). Permanently injurious substances need not be used for the behavioral tests. Historical data may be used if the essential aspects of the experimental procedure remain the same. Periodic updating of positive control data is recommended.

New positive control data should also be collected when personnel or some other critical element in the testing laboratory has changed.

(4) *Dose level and dose selection.* At least three doses shall be used in addition to the vehicle control group. The data should be sufficient to produce a dose-effect curve. The Agency strongly encourage the use of equally spaced doses and a rationale for dose selection that will maximally support detection of dose-effect relations. For acute studies, dose selection may be made relative to the establishment of a benchmark dose (BD). That is, doses may be specified as successive fractions, e.g. 0.5, 0.25, ...n of the BD. The BD itself may be estimated as the highest nonlethal dose as determined in a preliminary range-finding lethality study. A variety of test methodologies may be used for this purpose, and the method chosen may influence subsequent dose selection. The goal is to use a dose level that is sufficient to be judged a limit dose, or clearly toxic.

(i) *Acute studies.* The high dose need not be greater than 2 g/kg. Otherwise, the high dose should result in significant neurotoxic effects or other clearly toxic effects, but not result in an incidence of fatalities that would preclude a meaningful evaluation of the data. This dose may be estimated by a BD procedure as described under paragraph (e)(4) of this section, with the middle and low dose levels chosen as fractions of the BD dose. The lowest dose should produce minimal effect, e.g. an ED10, or alternatively, no effects.

(ii) *Subchronic and chronic studies.* The high dose need not be greater than 1 g/kg. Otherwise, the high dose level should result in significant neurotoxic effects or other clearly toxic effects, but not produce an incidence of fatalities that would prevent a meaningful evaluation of the data. The middle and low doses should be fractions of the high dose. The lowest dose should produce minimal effects, e.g. an ED10, or alternatively, no effects.

(5) *Route of exposure.* Selection of route may be based on several criteria including, the most likely route of human exposure, bioavailability, the likelihood of observing effects, practical difficulties, and the likelihood of producing nonspecific effects. For many materials, it should be recognized that more than one route of exposure may be important and that these criteria may conflict with one another. Initially only one route is required for screening for neurotoxicity. The route that best meets these criteria should be selected. Dietary feeding will generally be acceptable for repeated exposures studies.

(6) *Combined protocol.* The tests described in this screening battery may be combined with any other toxicity study, as long as none of the requirements of either are violated by the combination.

(7) *Study conduct*—(i) *Time of testing.* All animals shall be weighed on each test day and at least weekly during the exposure period.

(A) *Acute studies.* At a minimum, for acute studies observations and activity testing shall be made before the initiation of exposure, at the estimated time of peak effect within 8 hrs of dosing, and at 7 and 14 days after dosing. Estimation of times of peak effect may be made by dosing pairs of rats across a range of doses and making regular observations of gait and arousal.

(B) *Subchronic and chronic studies.* In a subchronic study, at a minimum, observations and activity measurements shall be made before the initiation of exposure and before the daily exposure, or for feeding studies at the same time of day, during the 4th, 8th, and 13th weeks of exposure. In chronic studies, at a minimum, observations and activity measurements shall be made before the initiation of exposure and before the daily exposure, or for feeding studies at the same time of day, every 3 months.

(ii) *Functional observational battery*—(A) *General conduct.* All animals in a given study shall be observed carefully by trained observers who are unaware of the animals' treatment, using standardized procedures to minimize observer variability. Where possible, it is advisable that the same observer be used to evaluate the animals in a given study. If this is not possible, some demonstration of interobserver reliability is required. The animals shall be removed from the home cage to a standard arena for observation. Effort

should be made to ensure that variations in the test conditions are minimal and are not systematically related to treatment. Among the variables that can affect behavior are sound level, temperature, humidity, lighting, odors, time of day, and environmental distractions. Explicit, operationally defined scales for each measure of the battery are to be used. The development of objective quantitative measures of the observational end-points specified is encouraged. Examples of observational procedures using defined protocols may be found in the references under paragraphs (g)(5), (g)(6), and (g)(9) of this section. The functional observational battery shall include a thorough description of the subject's appearance, behavior, and functional integrity. This shall be assessed through observations in the home cage and while the rat is moving freely in an open field, and through manipulative tests. Testing should proceed from the least to the most interactive with the subject. Scoring criteria, or explicitly defined scales, should be developed for those measures which involve subjective ranking.

(B) *List of measures.* The functional observational battery shall include the following list of measures:

(*1*) Assessment of signs of autonomic function, including but not limited to:

(*i*) Ranking of the degree of lacrimation and salivation, with a range of severity scores from none to severe.

(*ii*) Presence or absence of piloerection and exophthalmus.

(*iii*) Ranking or count of urination and defecation, including polyuria and diarrhea. This is most easily conducted during the open field assessment.

(*iv*) Pupillary function such as constriction of the pupil in response to light or a measure of pupil size.

(*v*) Degree of palpebral closure, e.g., ptosis.

(*2*) Description, incidence, and severity of any convulsions, tremors, or abnormal motor movements, both in the home cage and the open field.

(*3*) Ranking of the subject's reactivity to general stimuli such as removal from the cage or handling, with a range of severity scores from no reaction to hyperreactivity.

(*4*) Ranking of the subject's general level of activity during observations of the unperturbed subject in the open field, with a range of severity scores from unresponsive to hyperactive.

(*5*) Descriptions and incidence of posture and gait abnormalities observed in the home cage and open field.

(*6*) Ranking of any gait abnormalities, with a range of severity scores from none to severe.

(*7*) Forelimb and hindlimb grip strength measured using an objective procedure (the procedure described in the reference under paragraph (g)(8) of this section may be used).

(*8*) Quantitative measure of landing foot splay (the procedure described in the reference under paragraph (g)(3) of this section may be used).

(*9*) Sensorimotor responses to stimuli of different modalities will be used to detect gross sensory deficits. Pain perception may be assessed by a ranking or measure of the reaction to a tail-pinch, tail-flick, or hot-plate. The response to a sudden sound, e.g., click or snap, may be used to assess audition.

(*10*) Body weight.

(*11*) Description and incidence of any unusual or abnormal behaviors, excessive or repetitive actions (stereotypies), emaciation, dehydration, hypotonia or hypertonia, altered fur appearance, red or crusty deposits around the eyes, nose, or mouth, and any other observations that may facilitate interpretation of the data.

(C) *Additional measures.* Other measures may also be included and the development and validation of new tests is encouraged. Further information on the neurobehavioral integrity of the subject may be provided by:

(*1*) Count of rearing activity on the open field.

(*2*) Ranking of righting ability.

(*3*) Body temperature.

(*4*) Excessive or spontaneous vocalizations.

(*5*) Alterations in rate and ease of respiration, e.g., rales or dyspnea.

(*6*) Sensorimotor responses to visual or proprioceptive stimuli.

(iii) *Motor activity.* Motor activity shall be monitored by an automated activity recording apparatus. The device used must be capable of detecting

both increases and decreases in activity, i.e., baseline activity as measured by the device must not be so low as to preclude detection of decreases nor so high as to preclude detection of increases in activity. Each device shall be tested by standard procedures to ensure, to the extent possible, reliability of operation across devices and across days for any one device. In addition, treatment groups must be balanced across devices. Each animal shall be tested individually. The test session shall be long enough for motor activity to approach asymptotic levels by the last 20% of the session for nontreated control animals. All sessions shall have the same duration. Treatment groups shall be counterbalanced across test times. Effort should be made to ensure that variations in the test conditions are minimal and are not systematically related to treatment. Among the variables which can affect motor activity are sound level, size and shape of the test cage, temperature, relative humidity, lighting conditions, odors, use of the home cage or a novel test cage, and environmental distractions.

(iv) *Neuropathology: Collection, processing and examination of tissue samples.* To provide for adequate sampling as well as optimal preservation of cellular integrity for the detection of neuropathological alterations, tissue shall be prepared for histological analysis using in situ perfusion and paraffin and/or plastic embedding procedures. Paraffin embedding is acceptable for tissue samples from the central nervous system. Plastic embedding of tissue samples from the central nervous system is encouraged, when feasible. Plastic embedding is required for tissue samples from the peripheral nervous system. Subject to professional judgment and the type of neuropathological alterations observed, it is recommended that additional methods, such as glial fibrillary acidic protein (GFAP) immunohistochemistry and/or methods known as Bodian's or Bielchowsky's silver methods be used in conjunction with more standard stains to determine the lowest dose level at which neuropathological alterations are observed. When new or existing data provide evidence of structural alterations it is recommended that the GFAP immunoassay also be considered. A description of this technique can be found in the reference under paragraph (g)(10) of this section.

(A) *Fixation and processing of tissue.* The nervous system shall be fixed by in situ perfusion with an appropriate aldehyde fixative. Any gross abnormalities should be noted. Tissue samples taken should adequately represent all major regions of the nervous system. The tissue samples should be postfixed and processed according to standardized published histological protocols (protocols described in the references under paragraphs (g)(1), (g)(2), or (g)(11) of this section may be used). Tissue blocks and slides should be appropriately identified when stored. Histological sections should be stained for hematoxylin and eosin (H&E), or a comparable stain according to standard published protocols (some of these protocols are described in the references under paragraphs (g)(1) and (g)(11) of this section).

(B) *Qualitative examination.* Representative histological sections from the tissue samples should be examined microscopically by an appropriately trained pathologist for evidence of neuropathological alterations. The nervous system shall be thoroughly examined for evidence of any treatment-related neuropathological alterations. Particular attention should be paid to regions known to be sensitive to neurotoxic insult or those regions likely to be affected based on the results of functional tests. Such treatment-related neuropathological alterations should be clearly distinguished from artifacts resulting from influences other than exposure to the test substance. A stepwise examination of tissue samples is recommended. In such a stepwise examination, sections from the high dose group are first compared with those of the control group. If no neuropathological alterations are observed in samples from the high dose group, subsequent analysis is not required. If neuropathological alterations are observed in samples from the high dose group, samples from the intermediate and low dose groups are then examined sequentially.

(C) *Subjective diagnosis.* If any evidence of neuropathological alterations is found in the qualitative examination, then a subjective diagnosis shall be performed for the purpose of evaluating dose-response relationships. All regions of the nervous system exhibiting any evidence of neuropathological changes should be included in this analysis. Sections from all dose groups from each region will be coded and examined in randomized order without knowledge of the code. The frequency of each type and severity of each lesion will be recorded. After all samples from all dose groups including all regions have been rated, the code will be broken and statistical analysis performed to evaluate dose-response relationships. For each type of dose-related lesion observed, examples of different degrees of severity should be described. Photomicrographs of typical examples of treatment-related regions are recommended to augment these descriptions. These examples will also serve to illustrate a rating scale, such as 1=, 2=, and 3= for the degree of severity ranging from very slight to very extensive.

(f) *Data reporting and evaluation.* The final test report shall include the following information:

(1) *Description of equipment and test methods.* A description of the general design of the experiment and any equipment used shall be provided. This shall include a short justification explaining any decisions involving professional judgment.

(i) A detailed description of the procedures used to standardize observations, including the arena and scoring criteria.

(ii) Positive control data from the laboratory performing the test that demonstrate the sensitivity of the procedures being used. Historical data may be used if all essential aspects of the experimental protocol are the same. Historical control data can be critical in the interpretation of study findings. The Agency encourages submission of such data to facilitate the rapid and complete review of the significance of effects seen.

(2) *Results.* The following information shall be arranged by test group dose level.

(i) In tabular form, data for each animal shall be provided showing:

(A) Its identification number.

(B) Its body weight and score on each sign at each observation time, the time and cause of death (if appropriate), total session activity counts, and intrasession subtotals for each day measured.

(ii) Summary data for each group must include:

(A) The number of animals at the start of the test.

(B) The number of animals showing each observation score at each observation time.

(C) The mean and standard deviation for each continuous endpoint at each observation time.

(D) Results of statistical analyses for each measure, where appropriate.

(iii) All neuropathological observations shall be recorded and arranged by test groups. This data may be presented in the following recommended format:

(A) *Description of lesions for each animal.* For each animal, data must be submitted showing its identification (animal number, sex, treatment, dose, and duration), a list of structures examined as well as the locations, nature, frequency, and severity of lesions. Inclusion of photomicrographs is strongly recommended for demonstrating typical examples of the type and severity of the neuropathological alterations observed. Any diagnoses derived from neurological signs and lesions including naturally occurring diseases or conditions, should be recorded.

(B) *Counts and incidence of neuropathological alterations by test group.* Data should be tabulated to show:

(*1*) The number of animals used in each group and the number of animals in which any lesion was found.

(*2*) The number of animals affected by each different type of lesion, the locations, frequency, and average grade of each type of lesion.

(3) *Evaluation of data.* The findings from the screening battery should be evaluated in the context of preceding and/or concurrent toxicity studies and any correlated functional and

histopathological findings. The evaluation shall include the relationship between the doses of the test substance and the presence or absence, incidence and severity, of any neurotoxic effects. The evaluation shall include appropriate statistical analyses, for example, parametric tests for continuous data and nonparametric tests for the remainder. Choice of analyses should consider tests appropriate to the experimental design, including repeated measures. There may be many acceptable ways to analyze data.

(g) *References.* For additional background information on this test guideline, the following references should be consulted. These references are available at the addresses in § 700.17(b)(1) and (2) of this chapter.

(1) Bennet, H.S. *et al.* Science and art in the preparing tissues embedded in plastic for light microscopy, with special reference to glycol methacrylate, glass knives and simple stains. *Stain Technology*. 51:71–97 (1976).

(2) Di Sant Agnese, P.A. and De Mesy Jensen, K. Dibasic staining of large epoxy sections and application to surgical pathology. *American Journal of Clinical Pathology*. 81:25–29 (1984).

(3) Edwards, P.M. and Parker, V.H. A simple, sensitive and objective method for early assessment of acrylamide neuropathy in rats. *Toxicology and Applied Pharmacology*. 40:589–591 (1977).

(4) Finger, F.W. Ed. Myers, R.D. Measuring Behavioral Activity. Vol. 2. *Methods in Psychobiology* (Academic, NY, 1972) pp.1–19.

(5) Gad, S. A neuromuscular screen for use in industrial toxicology. *Journal of Toxicology and Environmental Health*. 9:691–704 (1982).

(6) Irwin, S. Comprehensive observational assessment: Ia. A systematic quantitative procedure for assessing the behavioral physiological state of the mouse. *Psychopharmacologia*. 13:222–257 (1968).

(7) Kinnard, E.J. and Watzman, N. Techniques utilized in the evaluation of psychotropic drugs on animals activity. *Journal of Pharmaceutical Sciences*. 55:995–1012 (1966).

(8) Meyer, O.A. *et al.* A method for the routine assessment of fore- and hindlimb grip strength of rats and mice. *Neurobehavioral Toxicology*. 1:233–236 (1979).

(9) Moser V.C. *et al.* Comparison of chlordimeform and carbaryl using a functional observational battery. *Fundamental and Applied Toxicology*. 11:189–206 (1988).

(10) O'Callaghan, J.P. Quantification of glial fibrillary acidic protein: Comparison of slot-immunobinding assays with a novel sandwich ELISA. *Neurotoxicology and Teratology*. 13:275–281 (1991).

(11) Pender, M.P. A simple method for high resolution light microscopy of nervous tissue. *Journal of Neuroscience Methods*. 15:213–218 (1985).

(12) Reiter, L.W. Use of activity measures in behavioral toxicology. *Environmental Health Perspectives*. 26:9–20 (1978).

(13) Reiter, L.W. and MacPhail, R.C. Motor activity: A survey of methods with potential use in toxicity testing. *Neurobehavorial Toxicology*. 1—Supplement. 1:53–66 (1979).

(14) Robbins, T.W. Eds. Iversen, L.L., Iverson, D.S., and Snyder, S.H. A critique of the methods available for the measurement of spontaneous motor activity. Vol 7. *Handbook of Psychopharmacology* (Plenum, NY, 1977) pp. 37–82.

[62 FR 43824, Aug. 15, 1997, as amended at 64 FR 35080, June 30, 1999; 77 FR 46294, Aug. 3, 2012]

§ 799.9630 TSCA developmental neurotoxicity.

(a) *Scope*—(1) *Applicability*. This section is intended to meet the testing requirements *under* section 4 of the Toxic Substances Control Act (TSCA).

(2) *Source*. The source material used in developing this TSCA test guideline is the OPPTS harmonized test guideline 870.6300 (August 1998).

(b) *Purpose*. In the assessment and evaluation of the toxic characteristics of a chemical substance or mixture (test substance), determination of the potential for developmental neurotoxicity is important. This study is designed to develop data on the potential functional and morphological hazards to the nervous system which may arise in the offspring from exposure of the mother during pregnancy and lactation.

(c) *Principle of the test method.* The test substance is administered to several groups of pregnant animals during gestation and early lactation, one dose level being used per group. Offspring are randomly selected from within litters for neurotoxicity evaluation. The evaluation includes observations to detect gross neurologic and behavioral abnormalities, determination of motor activity, response to auditory startle, assessment of learning, neuropathological evaluation, and brain weights. This protocol may be used as a separate study, as a followup to a standard developmental toxicity and/or adult neurotoxicity study, or as part of a two-generation reproduction study, with assessment of the offspring conducted on the second (F^2) generation.

(d) *Test procedure*—(1) *Animal selection*—(i) *Species and strain.* Testing must be performed in the rat. Because of its differences in timing of developmental events compared to strains that are more commonly tested in other developmental and reproductive toxicity studies, it is preferred that the Fischer 344 strain not be used. If a sponsor wishes to use the Fischer 344 rat or a mammalian species other than the rat, ample justification/reasoning for this selection must be provided.

(ii) *Age.* Young adult (nulliparous females) animals must be used.

(iii) *Sex.* Pregnant female animals must be used at each dose level.

(iv) *Number of animals.* (A) The objective is for a sufficient number of pregnant rats to be exposed to the test substance to ensure that an adequate number of offspring are produced for neurotoxicity evaluation. At least 20 litters are recommended at each dose level.

(B) On postnatal day 4, the size of each litter should be adjusted by eliminating extra pups by random selection to yield, as nearly as possible, four male and four females per litter. Whenever the number of pups of either sex prevents having four of each sex per litter, partial adjustment (for example, five males and three females) is permitted. Testing is not appropriate for litters of less than seven pups. Elimination of runts only is not appropriate. Individual pups should be identified uniquely after standardization of litters. A method that may be used for identification can be found under paragraph (f)(1) of this section.

(v) *Assignment of animals for behavioral tests, brain weights, and neuropathological evaluations.* After standardization of litters, one male or one female from each litter (total of 10 males and 10 females per dose group) must be randomly assigned to one of the following tests: Motor activity, auditory startle, and learning and memory, in weanling and adult animals. On postnatal day 11, either 1 male or 1 female pup from each litter (total of 10 males and 10 females per dose group) must be sacrificed. Brain weights must be measured in all of these pups and, of these pups, six per sex per dose must be selected for neuropathological evaluation. At the termination of the study, either 1 male or 1 female from each litter (total of 10 males and 10 females per dose group) must be sacrificed and brain weights must be measured. An additional group of six animals per sex per dose group (one male or one female per litter) must be sacrificed at the termination of the study for neuropathological evaluation.

(2) *Control group.* A concurrent control group is required. This group must be a sham-treated group or, if a vehicle is used in administering the test substance, a vehicle control group. The vehicle must neither be developmentally toxic nor have effects on reproduction. Animals in the control group must be handled in an identical manner to test group animals.

(3) *Dose levels and dose selection.* (i) At least three dose levels of the test substance plus a control group (vehicle control, if a vehicle is used) must be used.

(ii) If the test substance has been shown to be developmentally toxic either in a standard developmental toxicity study or in a pilot study, the highest dose level must be the maximum dose which will not induce in utero or neonatal death or malformations sufficient to preclude a meaningful evaluation of neurotoxicity.

(iii) If a standard developmental toxicity study has not been conducted, the highest dose level, unless limited by

the physicochemical nature or biological properties of the substance, must induce some overt maternal toxicity, but must not result in a reduction in weight gain exceeding 20 percent during gestation and lactation.

(iv) The lowest dose should not produce any grossly observable evidence of either maternal or developmental neurotoxicity.

(v) The intermediate doses must be equally spaced between the highest and lowest doses used.

(4) *Dosing period.* Day 0 of gestation is the day on which a vaginal plug and/or sperm are observed. The dosing period must cover the period from day 6 of gestation through day 10 postnatally. Dosing should not occur on the day of parturition in those animals who have not completely delivered their offspring.

(5) *Administration of the test substance.* The test substance or vehicle must be administered orally. Other routes of administration may be acceptable, on a case-by-case basis, with ample justification/reasoning for this selection. The test substance or vehicle must be administered based on the most recent weight determination.

(6) *Observation of dams.* (i) A gross examination of the dams must be made at least once each day before daily treatment.

(ii) Ten dams per group must be observed outside the home cage at least twice during the gestational dosing period (days 6–21) and twice during the lactational dosing period (days 1–10) for signs of toxicity. The animals must be observed by trained technicians who are unaware of the animals' treatment, using standardized procedures to maximize interobserver reliability. Where possible, it is advisable that the same observer be used to evaluate the animals in a given study. If this is not possible, some demonstration of interobserver reliability is required.

(iii) During the treatment and observation periods under paragraph (d)(6)(ii) of this section, observations must include:

(A) Assessment of signs of autonomic function, including but not limited to:

(*1*) Ranking of the degree of lacrimation and salivation, with a range of severity scores from none to severe.

(*2*) Presence or absence of piloerection and exophthalmus.

(*3*) Ranking or count of urination and defecation, including polyuria and diarrhea.

(*4*) Pupillary function such as constriction of the pupil in response to light or a measure of pupil size.

(*5*) Degree of palpebral closure, e.g., ptosis.

(B) Description, incidence, and severity of any convulsions, tremors, or abnormal movements.

(C) Description and incidence of posture and gait abnormalities.

(D) Description and incidence of any unusual or abnormal behaviors, excessive or repetitive actions (stereotypies), emaciation, dehydration, hypotonia or hypertonia, altered fur appearance, red or crusty deposits around the eyes, nose, or mouth, and any other observations that may facilitate interpretation of the data.

(iv) Signs of toxicity must be recorded as they are observed, including the time of onset, degree, and duration.

(v) Animals must be weighed at least weekly and on the day of delivery and postnatal days 11 and 21 (weaning) and such weights must be recorded.

(vi) The day of delivery of litters must be recorded and considered as postnatal day 0.

(7) *Study conduct*—(i) *Observation of offspring.* (A) All offspring must be examined cage-side at least daily for gross signs of mortality or morbidity.

(B) A total of 10 male offspring and 10 female offspring per dose group must be examined outside the cage for signs of toxicity on days 4, 11, 21, 35, 45, and 60. The offspring must be observed by trained technicians, who are unaware of the treatment being used, using standardized procedures to maximize interobserver reliability. Where possible, it is advisable that the same observer be used to evaluate the animals in a given study. If this is not possible, some demonstration of interobserver reliability is required. At a minimum, the end points outlined in paragraph (d)(6)(iii) of this section must be monitored as appropriate for the developmental stage being observed.

(C) Any gross signs of toxicity in the offspring must be recorded as they are observed, including the time of onset, degree, and duration.

(ii) *Developmental landmarks.* Live pups must be counted and each pup within a litter must be weighed individually at birth or soon thereafter, and on postnatal days 4, 11, 17, and 21 and at least once every 2 weeks thereafter. The age of vaginal opening and preputial separation must be determined. General procedures for these determinations may be found in paragraphs (f)(1) and (f)(11) of this section.

(iii) *Motor activity.* Motor activity must be monitored specifically on postnatal days 13, 17, 21, and 60 (+2 days). Motor activity must be monitored by an automated activity recording apparatus. The device must be capable of detecting both increases and decreases in activity, (i.e., baseline activity as measured by the device must not be so low as to preclude detection of decreases nor so high as to preclude detection of increases in activity). Each device must be tested by standard procedures to ensure, to the extent possible, reliability of operation across devices and across days for any one device. In addition, treatment groups must be balanced across devices. Each animal must be tested individually. The test session must be long enough for motor activity to approach asymptotic levels by the last 20 percent of the session for nontreated control animals. All sessions must have the same duration. Treatment groups must be counter-balanced across test times. Activity counts must be collected in equal time periods of no greater than 10 minutes duration. Efforts must be made to ensure that variations in the test conditions are minimal and are not systematically related to treatment. Among the variables that can affect motor activity are sound level, size and shape of the test cage, temperature, relative humidity, light conditions, odors, use of home cage or novel test cage, and environmental distractions. Additional information on the conduct of a motor activity study may be obtained in § 799.9620.

(iv) *Auditory startle test.* An auditory startle habituation test should be performed on the offspring around the time of weaning and around day 60. Day of testing should be counterbalanced across treated and control groups. Details on the conduct of this testing may be obtained under paragraph (f)(1) of this section. In performing the auditory startle task, the mean response amplitude on each block of 10 trials (5 blocks of 10 trials per session on each day of testing) must be made. While use of prepulse inhibition is not a requirement, it is highly recommended. Details on the conduct of this test may be obtained in paragraph (f)(10) of this section.

(v) *Learning and memory tests.* A test of associative learning and memory should be conducted around the time of weaning and around day 60. Day of testing should be counterbalanced across treated and control groups. The same or separate tests may be used at these two stages of development. Some flexibility is allowed in the choice of tests for learning and memory in weanling and adult rats. However, the tests must be designed to fulfill two criteria. First, learning must be assessed either as a change across several repeated learning trials or sessions, or, in tests involving a single trial, with reference to a condition that controls for nonassociative effects of the training experience. Second, the tests must include some measure of memory (short-term or long-term) in addition to original learning (acquisition). If the tests of learning and memory reveal an effect of the test compound, it may be in the best interest of the sponsor to conduct additional tests to rule out alternative interpretations based on alterations in sensory, motivational, and/or motor capacities. In addition to the above two criteria, it is recommended that the test of learning and memory be chosen on the basis of its demonstrated sensitivity to the class of compound under investigation, if such information is available in the literature. In the absence of such information, examples of tests that could be made to meet the above criteria include: Delayed-matching-to-position, as described for the adult rat (see paragraph (f)(3) of this section) and for the infant rat (see paragraph (f)(9) of this

section); olfactory conditioning, as described in paragraph (f)(13) of this section; and acquisition and retention of schedule-controlled behavior (see paragraphs (f)(4) and (f)(5) of this section). Additional tests for weanling rats are described under paragraphs (f)(20) and (f)(12) of this section, and for adult rats under paragraph (f)(16) of this section.

(vi) *Neuropathology.* Neuropathological evaluation must be conducted on animals on postnatal day 11 and at the termination of the study. At 11 days of age, one male or female pup must be removed from each litter such that equal numbers of male and female offspring are removed from all litters combined. Of these, six male and six female pups per dose group will be sacrificed for neuropathological analysis. The pups will be sacrificed by exposure to carbon dioxide and immediately thereafter the brains should be removed, weighed, and immersion-fixed in an appropriate aldehyde fixative. The remaining animals will be sacrificed in a similar manner and immediately thereafter their brains removed and weighed. At the termination of the study, one male or one female from each litter will be sacrificed by exposure to carbon dioxide and immediately thereafter the brain must be removed and weighed. In addition, six animals per sex per dose group (one male or female per litter) must be sacrificed at the termination of the study for neuropathological evaluation. Neuropathological analysis of animals sacrificed at the termination of the study must be performed in accordance with § 799.9620. Neuropathological evaluation of animals sacrificed on postnatal day 11 and at termination of the study must include a qualitative analysis and semiquantitative analysis as well as simple morphometrics.

(A) *Fixation and processing of tissue samples for postnatal day 11 animals.* Immediately following removal, the brain must be weighed and immersion fixed in an appropriate aldehyde fixative. The brains must be postfixed and processed according to standardized published histological protocols such as those discussed in references listed under paragraphs (f)(6), (f)(14), (f)(17), and (f)(21) of this section. Paraffin embedding is acceptable but plastic embedding is preferred and recommended. Tissue blocks and slides must be appropriately identified when stored. Histological sections must be stained for hematoxylin and eosin, or a similar stain according to standard published protocols such as those discussed in references listed under paragraphs (f)(2), (f)(18), and (f)(23) of this section. For animals sacrificed at the termination of the study, methods for fixation and processing of tissue samples are provided in § 799.9620(e)(7)(iv)(A).

(B) *Qualitative analysis.* The purposes of the qualitative examination are threefold—to identify regions within the nervous system exhibiting evidence of neuropathological alterations, to identify types of neuropathological alterations resulting from exposure to the test substance, and to determine the range of severity of the neuropathological alterations. Representative histological sections from the tissue samples should be examined microscopically by an appropriately trained pathologist for evidence of neuropathological alterations. The following stepwise procedure is recommended for the qualitative analysis. First, sections from the high dose group are compared with those of the control group. If no evidence of neuropathological alterations is found in animals of the high dose group, no further analysis is required. If evidence of neuropathological alterations are found in the high dose group, then animals from the intermediate and low dose group are examined. Subject to professional judgment and the kind of neuropathological alterations observed, it is recommended that additional methods such as Bodian's or Bielchowsky's silver methods and/or immunohistochemistry for glial fibrillary acid protein be used in conjunction with more standard stains to determine the lowest dose level at which neuropathological alterations are observed. Evaluations of postnatal day 11 pups is described in paragraphs (d)(7)(vi)(B)(*1*) and (d)(7)(vi)(B)(*2*) of this section. For animals sacrificed at the termination of the study, the regions to be examined and the types of alterations that must be assessed are identified in § 799.9620(e)(7)(iv)(B).

(*1*) *Regions to be examined.* The brains should be examined for any evidence of treatment-related neuropathological alterations and adequate samples should be taken from all major brain regions (e.g., olfactory bulbs, cerebral cortex, hippocampus, basal ganglia, thalamus, hypothalamus, midbrain (tectum, tegmentum, and cerebral peduncles), brainstem and cerebellum) to ensure a thorough examination.

(*2*) *Types of alterations.* Guidance for neuropathological examination for indications of developmental insult to the brain can be found in paragraphs (f)(8) and (f)(22) of this section. In addition to more typical kinds of cellular alterations (e.g., neuronal vacuolation, degeneration, necrosis) and tissue changes (e.g., astrocytic proliferation, leukocytic infiltration, and cystic formation) particular emphasis should be paid to structural changes indicative of developmental insult including but not restricted to:

(*i*) Gross changes in the size or shape of brain regions such as alterations in the size of the cerebral hemispheres or the normal pattern of foliation of the cerebellum.

(*ii*) The death of neuronal precursors, abnormal proliferation, or abnormal migration, as indicated by pyknotic cells or ectopic neurons, or gross alterations in regions with active proliferative and migratory zones, alterations in transient developmental structures (e.g., the external germinal zone of the cerebellum, see paragraph (f)(15) of this section).

(*iii*) Abnormal differentiation, while more apparent with special stains, may also be indicated by shrunken and malformed cell bodies.

(*iv*) Evidence of hydrocephalus, in particular enlargement of the ventricles, stenosis of the cerebral aqueduct and general thinning of the cerebral hemispheres.

(C) *Subjective diagnosis.* If any evidence of neuropathological alterations is found in the qualitative examination, then a subjective diagnosis will be performed for the purpose of evaluating dose-response relationships. All regions of the brain exhibiting any evidence of neuropathological changes must be included in this analysis. Sections of each region from all dose groups will be coded as to treatment and examined in randomized order. The frequency of each type and the severity of each lesion will be recorded. After all sections from all dose groups including all regions have been rated, the code will be broken and statistical analyses performed to evaluate dose-response relationships. For each type of dose related lesion observed, examples of different ranges of severity must be described. The examples will serve to illustrate a rating scale, such as 1+, 2+, and 3+ for the degree of severity ranging from very slight to very extensive.

(D) *Simple morphometric analysis.* Since the disruption of developmental processes is sometimes more clearly reflected in the rate or extent of growth of particular brain regions, some form of morphometric analysis must be performed on postnatal day 11 and at the termination of the study to assess the structural development of the brain. At a minimum, this would consist of a reliable estimate of the thickness of major layers at representative locations within the neocortex, hippocampus, and cerebellum. For guidance on such measurements see Rodier and Gramann under paragraph (f)(19) of this section.

(e) *Data collection, reporting, and evaluation.* The following specific information must be reported:

(1) *Description of test system and test methods.* A description of the general design of the experiment should be provided. This must include:

(i) A detailed description of the procedures used to standardize observations and procedures as well as operational definitions for scoring observations.

(ii) Positive control data from the laboratory performing the test that demonstrate the sensitivity of the procedures being used. These data do not have to be from studies using prenatal exposures. However, the laboratory must demonstrate competence in evaluation of effects in neonatal animals perinatally exposed to chemicals and establish test norms for the appropriate age group.

(iii) Procedures for calibrating and ensuring the equivalence of devices and the balancing of treatment groups in testing procedures.

(iv) A short justification explaining any decisions involving professional judgement.

(2) *Results*. The following information must be arranged by each treatment and control group:

(i) In tabular form, data for each animal must be provided showing:

(A) Its identification number and the litter from which it came.

(B) Its body weight and score on each developmental landmark at each observation time.

(C) Total session activity counts and intrasession subtotals on each day measured.

(D) Auditory startle response amplitude per session and intrasession amplitudes on each day measured.

(E) Appropriate data for each repeated trial (or session) showing acquisition and retention scores on the tests of learning and memory on each day measured.

(F) Time and cause of death (if appropriate); any neurological signs observed; a list of structures examined as well as the locations, nature, frequency, and extent of lesions; and brain weights.

(ii) The following data should also be provided, as appropriate:

(A) Inclusion of photomicrographs demonstrating typical examples of the type and extent of the neuropathological alterations observed is recommended.

(B) Any diagnoses derived from neurological signs and lesions, including naturally occurring diseases or conditions, should also be recorded.

(iii) Summary data for each treatment and control group must include:

(A) The number of animals at the start of the test.

(B) The body weight of the dams during gestation and lactation.

(C) Litter size and mean weight at birth.

(D) The number of animals showing each abnormal sign at each observation time.

(E) The percentage of animals showing each abnormal sign at each observation time.

(F) The mean and standard deviation for each continuous endpoint at each observation time. These will include body weight, motor activity counts, auditory startle responses, performance in learning and memory tests, regional brain weights and whole brain weights (both absolute and relative).

(G) The number of animals in which any lesion was found.

(H) The number of animals affected by each different type of lesion, the location, frequency and average grade of each type of lesion for each animal.

(I) The values of all morphometric measurements made for each animal listed by treatment group.

(3) *Evaluation of data*. An evaluation of test results must be made. The evaluation must include the relationship between the doses of the test substance and the presence or absence, incidence, and extent of any neurotoxic effect. The evaluation must include appropriate statistical analyses. The choice of analyses must consider tests appropriate to the experimental design and needed adjustments for multiple comparisons. The evaluation must include the relationship, if any, between observed neuropathological and behavioral alterations.

(f) *References*. For additional background information on this test guideline, the following references should be consulted. These references are available at the addresses in § 700.17(b)(1) and (2) of this chapter.

(1) Adams, J., Buelke-Sam, J., Kimmel, C.A., Nelson, C.J., Reiter, L.W., Sobotka, T.J., Tilson, H.A., and Nelson, B.K. Collaborative behavioral teratolgy study: Protocol design and testing procedures.*Neurobehavioral Toxicology and Teratology* 7:579–586 (1985).

(2) Bennett, H.S., Wyrick, A.D., Lee, S.W., and McNeil, J.H. Science and art in preparing tissues embedded in plastic for light microscopy, with special reference to glycol methacrylate, glass knives and simple stains. *Stain Technology* 51:71–97 (1976).

(3) Bushnell, P.J. Effects of delay, intertrial interval, delay behavior and trimethyltin on spatial delayed response in rats. *Neurotoxicology and Teratology* 10:237–244 (1988).

(4) Campbell, B.A. and Haroutunian, V. Effects of age on long-term memory: Retention of fixed interval responding. *Journal of Gerontology* 36:338–341 (1981).

(5) Cory-Slechta, D.A., Weiss, B., and Cox, C. Delayed behavioral toxicity of lead with increasing exposure concentration. *Toxicology and Applied Pharmacology* 71:342–352 (1983).

(6) Di Sant Agnese, P. A. and De Mesy Jensen, K.L. Dibasic staining of large epoxy tissue sections and application to surgical pathology. *American Journal of Clinical Pathology* 81:25–29 (1984).

(7) U.S. Environmental Protection Agency. Neurotoxicity Screening Battery. In: Pesticide Assessment Guidelines, Subdivision F, Addendum 10. EPA 540/09–91–123. NTIS PB 91–154617 (1991).

(8) Friede, R. L. *Developmental Neuropathology*. Springer-Verlag, New York. pp. 1–23, 297–313, 326–351 (1975).

(9) Green, R.J. and Stanton, M.E. Differential ontogeny of working memory and reference memory in the rat. *Behavioral Neuroscience* 103:98–105 (1989).

(10) Ison, J.R. Reflex modification as an objective test for sensory processing following toxicant exposure. *Neurobehavioral Toxicology and Teratology* 6:437–445 (1984).

(11) Korenbrot, C.C., Huhtaniemi, I.T., and Weiner, R.I. Preputial separation as an external sign of pubertal development in the male rat. *Biology of Reproduction* 17:298–303 (1977).

(12) Krasnegor, N.A., Blass, E.M., Hofer, M.A., and Smotherman, W.P. (eds.) *Perinatal Development: A Psychobiological Perspective*. Academic Press, Orlando. pp.11–37, 145–167. (1987).

(13) Kucharski, D. and Spear, N.E. Conditioning of aversion to an odor paired with peripheral shock in the developing rat. *Developmental Psychobiology* 17:465–479 (1984).

(14) Luna, L. G. (editor). *Manual of Histologic Staining Methods of the Armed Forces Institute of Pathology*. (Third Edition). McGraw-Hill, New York. pp. 1–31 (1968).

(15) Miale, I. L. and Sidman, R.L. An autoradiographic analysis of histogenesis in the mouse cerebellum. *Experimental Neurology*. 4:277–296 (1961).

(16) Miller, D.B. and Eckerman, D.A. Learning and memory measures. In: *Neurobehavioral Toxicology*, Z. Annau (ed). Johns Hopkins University Press, Baltimore. pp. 94–149 (1986).

(17) Pender, M.P. A simple method for high resolution light microscopy of nervous tissue. *Journal of Neuroscience Methods*. 15:213–218 (1985).

(18) Ralis, H.M., Beesley, R.A., and Ralis, Z.A. *Techniques in Neurohistology*. Butterworths, London. pp. 57–145 (1973).

(19) Rodier, P.M. and Gramann, W.J. Morphologic effects of interference with cell proliferation in the early fetal period. *Neurobehavioral Toxicology* 1:129–135 (1979).

(20) Spear, N.E. and Campbell, B.A. (eds.) *Ontogeny of Learning and Memory*. Erlbaum, New Jersey. pp. 101–133, 157–224 (1979).

(21) Spencer, P.S., Bischoff, M.C., and Schaumburg, H.H. Neuropathological methods for the detection of neurotoxic disease. In: *Experimental and Clinical Neurotoxicology*. *Spencer, P.S. and Schaumburg, H.H. (eds.)*. Williams and Wilkins, Baltimore. pp. 743–757 (1980).

(22) Suzuki, K. Special vulnerabilities of the developing nervous system to toxic substances. In: *Experimental and Clinical Neurotoxicology*. Spencer, P.S. and Schaumburg, H.H. (eds.). Williams and Wilkins, Baltimore. pp. 48–61 (1980).

(23) Luna, L.G. (ed.). Manual of Histologic Staining Methods of the Armed Forces Institute of Pathology. (Third Edition). McGraw-Hill, New York. pp. 32–46 (1968).

[65 FR 78811, Dec. 15, 2000, as amended at 77 FR 46294, Aug. 3, 2012]

§ 799.9748 TSCA metabolism and pharmacokinetics

(a) *Scope*. (1) This section is intended to meet the testing requirements under section 4 of the Toxic Substances Control Act (TSCA). (1) Testing of the disposition of a test substance is designed to obtain adequate information on its absorption, distribution, biotransformation, and excretion and to aid in understanding the mechanism of toxicity. Basic pharmacokinetic parameters determined from these studies will also provide information on the potential for accumulation of the test substance in tissues and/or organs and the potential for induction of biotransformation as a result of exposure to the test substance. These data can be used to assess the adequacy and relevance of the extrapolation of animal toxicity data (particularly chronic toxicity and/

or carcinogenicity data) to human risk assessment.

(2) Metabolism data can also be used to assist in determining whether animal toxicity studies have adequately addressed any toxicity concerns arising from exposure to plant metabolites, and in the setting of tolerances, if any, for those metabolites in raw agricultural commodities.

(b) *Source*. The source material used in developing this TSCA test guideline is the Office of Prevention, Pesticides and Toxic Substances (OPPTS) harmonized test guideline 870.7485 (August 1998, final guideline). This source is available at the address in paragraph (h) of this section.

(c) *Definitions*. The following definitions apply to this section.

Metabolism (biotransformation) is the sum of the processes by which a foreign chemical is subjected to chemical change by living organisms.

LOEL is the lowest observable effects level.

NOEL is the no observable effects level.

Pharmacokinetics is the quantitation and determination of the time course and dose dependency of the absorption, distribution, biotransformation, and excretion of chemicals.

(d) *Good laboratory practice standards*. The pharmacokinetics and metabolism tests outlined in this guideline must conform to the laboratory practices stipulated in 40 CFR Part 792—Good Laboratory Practice Standards.

(e) *Test Procedures*. Test procedures presented below utilize a tier system to minimize the use of resources and to allow flexibility in the conduct of metabolism studies. The proposed tier system consists of a basic data set (Tier 1) and additional studies (Tier 2). These additional studies may be requested based upon the existing toxicology data base and/or the results of Tier 1 testing which are found to impact upon the risk assessment process. For Tier 1 testing, the oral route will typically be required; however, if the use pattern results in other types of exposure, other routes (dermal and/or inhalation) may be required for initial testing of the disposition of a chemical substance. The registrant should justify the route of exposure to the Agency. Complete descriptions of the test procedures for these other routes of exposure can be found in paragraph (i) of this section. Except in unusual circumstances, the tiered approach to metabolism testing should apply to all listed routes of exposure.

(1) *Pilot studies*. The use of pilot studies is recommended and encouraged for the selection of experimental conditions for the pharmacokinetics and metabolism studies (mass balance, analytical procedures, dose-finding, excretion of CO_2, etc.).

(2) *Animal selection*—(i) *Species*. The rat must normally be used for testing because it has been used extensively for metabolic and toxicological studies. The use of other or additional species may be required if critical toxicology studies demonstrate evidence of significant toxicity in these species or if metabolism is shown to be more relevant to humans in the test species.

(ii) *Strain*. Adult animals of the strain used or proposed to be used for the determination of adverse health effects associated with the test substance.

(3) *Material to be tested*—(i) *Test substance*. (A) A radiolabeled test substance using ^{14}C should be used for all material balance and metabolite identification aspects of the study. Other radioactive and stable isotopes may be used, particularly if the element is responsible for or is a part of the toxic portion of the compound. If it can be demonstrated that the material balance and metabolite identification requirements can be met using unlabeled test substance, then radiolabeled compound need not be used. If possible, the radiolabel should be located in a core portion of the molecule which is metabolically stable (it is not exchangeable, is not removed metabolically as CO_2, and does not become part of the one-carbon pool of the organism). Labeling of multiple sites of the molecule may be necessary to follow the metabolic fate of the compound.

(B) The label should follow the test compound and/or its major metabolites until excreted. The radiopurity of the radioactive test substance shall be the highest attainable for a particular test substance (ideally it should be greater than 95%) and reasonable effort should

be made to identify impurities present at or above 2%. The purity, along with the identity of major impurities which have been identified, shall be reported. For other segments of the study, nonradioactive test substance may be used if it can be demonstrated that the analytical specificity and sensitivity of the method used with nonradioactive test substance is equal to or greater than that which could be obtained with the radiolabeled test substance. The radioactive and nonradioactive test substances shall be analyzed using an appropriate method to establish purity and identity. Additional guidance will be provided in chemical specific test rules to assist in the definition and specifications of test substances composed of mixtures and methods for determination of purity.

(ii) *Administration of test substance.* Test substance should be dissolved or suspended homogeneously in a vehicle usually employed for acute administration. A rationale for the choice of vehicle should be provided. The customary method of administration will be by oral gavage; however, administration by gelatin capsule or as a dietary mixture may be advantageous in specific situations. Verification of the actual dose administered to each animal should be provided.

(4) *Tier testing.* (i) The multiplicity of metabolic parameters that impact the outcome of toxicological evaluations preclude the use of a universal study design for routine toxicological evaluation of a test substance. The usefulness of a particular study design depends upon the biological activity of a compound and circumstances of exposure. For these reasons, a tiered system is proposed for evaluation of the metabolism/kinetic properties of a test substance.

(ii) The first tier data set is a definitive study by the appropriate route of exposure conducted in male rats to determine the routes and rate of excretion and to identify excreted metabolites. First tier data will also provide basic information for additional testing (Tier 2) if such testing is considered necessary. In the majority of cases, Tier 1 data are expected to satisfy regulatory requirements for biotransformation and pharmacokinetic data on test chemicals.

(iii) Second tier testing describes a variety of metabolism/kinetic experiments which address specific questions based on the existing toxicology data base and/or those results of Tier 1 testing impacting significantly on the risk assessment process. For conduct of these studies, individualized protocols may be necessary. Protocols for these studies, if required, can be developed as a cooperative effort between Agency and industry scientists.

(f) *Tier 1 data requirements (minimum data set).* At this initial level of testing, biotransformation and pharmacokinetic data from a single low dose group will be required. This study will determine the rate and routes of excretion and the type of metabolites generated.

(1) *Number and sex of animals.* A minimum of four male young adult animals must be used for Tier 1 testing. The use of both sexes may be required in cases where there is evidence to support significant sex-related differences in toxicity.

(2) *Dose selection.* (i) A single dose is required for each route of exposure. The dose should be nontoxic, but high enough to allow for metabolite identification in excreta. If no other toxicity data are available for selection of the low dose, a dose identified as a fraction of the LD_{50} (as determined from acute toxicity studies) may be used. The magnitude of the dose used in Tier 1 studies should be justified in the final report.

(ii) For test substances of low toxicity a maximum dose of 1,000 mg/kg should be used; chemical-specific considerations may necessitate a higher maximum dose and will be addressed in specific test rules.

(3) *Measurements*—(i) *Excretion.* (A) Data obtained from this section (percent recovery of administered dose from urine, feces, and expired air) will be used to determine the rate and extent of excretion of test chemical, to assist in establishing mass balance, and will be used in conjunction with pharmacokinetic parameters to determine the extent of absorption. The quantities of radioactivity eliminated in the urine, feces, and expired air shall

be determined separately at appropriate time intervals.

(B) If a pilot study has shown that no significant amount of radioactivity is excreted in expired air, then expired air need not be collected in the definitive study.

(C) Each animal must be placed in a separate metabolic unit for collection of excreta (urine, feces and expired air). At the end of each collection period, the metabolic units must be rinsed with appropriate solvent to ensure maximum recovery of radiolabel. Excreta collection must be terminated at 7 days, or after at least 90% of the administered dose has been recovered, whichever occurs first. The total quantities of radioactivity in urine must be determined at 6, 12, and 24 hours on day 1 of collection, and daily thereafter until study termination, unless pilot studies suggest alternate or additional time points for collection. The total quantities of radioactivity in feces should be determined on a daily basis beginning at 24 hours post-dose, and daily thereafter until study termination. The collection of CO_2 and other volatile materials may be discontinued when less than 1% of the administered dose is found in the exhaled air during a 24-hour collection period.

(ii) *Tissue distribution.* At the termination of the Tier 1 study, the following tissues should be collected and stored frozen: Liver, fat, gastrointestinal tract, kidney, spleen, whole blood, and residual carcass. If it is determined that a significant amount of the administered dose is unaccounted for in the excreta, then data on the percent of the total (free and bound) radioactive dose in these tissues as well as residual carcass will be requested. Additional tissues must be included if there is evidence of target organ toxicity from subchronic or chronic toxicity studies. For other routes of exposure, specific tissues may also be required, such as lungs in inhalation studies and skin in dermal studies. Certain techniques currently at various stages of development, e.g., quantitative whole-body autoradiography, may prove useful in determining if a test substance concentrates in certain organs or in determining a specific pattern of distribution within a given tissue. The use of such techniques is encouraged, but not required, and may be employed to limit the number of tissues collected to those shown to contain a measurable amount of radioactivity.

(iii) *Metabolism.* Excreta must be collected for identification and quantitation of unchanged test substance and metabolites as described in paragraph (f)(3)(i) of this section. Pooling of excreta to facilitate metabolite identification within a given dose group is acceptable. Profiling of metabolites from each time period is recommended. However, if lack of sample and/or radioactivity precludes this, pooling of urine as well as pooling of feces across several time points is acceptable. Appropriate qualitative and quantitative methods must be used to assay urine, feces, and expired air from treated animals. Reasonable efforts should be made to identify all metabolites present at 5% or greater of the administered dose and to provide a metabolic scheme for the test chemical. Compounds which have been characterized in excreta as comprising 5% or greater of the administered dose should be identified. If identification at this level is not possible, a justification/explanation should be provided in the final report. Identification of metabolites representing less than 5% of the administered dose might be requested if such data are needed for risk assessment of the test chemical. Structural confirmation should be provided whenever possible. Validation of the methods used in metabolite identification should be included.

(g) *Tier 2 data requirements.* Studies at the Tier 2 level are designed to answer questions about the disposition of test chemicals based on the existing toxicology data base and/or results of Tier 1 testing which may have a significant impact on the risk assessment for the test chemical. Such studies may address questions regarding absorption, persistence, or distribution of the test chemical, or a definitive alteration in the metabolic profile occurring with dose which may be of toxicological concern. At the Tier 2 level, only those studies which address a specific concern are required, and if required must be conducted according to mutual

agreement between the registrant and the Agency. Flexibility will be allowed in the design of specific experiments as warranted by technological advances in this field.

(1) *Absorption.* (i) If the extent of absorption cannot be established from Tier 1 studies, or where greater than 20% of the administered dose is present in feces, a study to determine the extent of absorption will be required. This can be accomplished either through intravenous administration of test material and measurement of radioactivity in excreta or after oral administration of test material and measurement of radioactivity in bile.

(ii) For the intravenous study, a single dose (not to exceed the oral dose used in Tier 1) of test chemical using an appropriate vehicle should be administered in a suitable volume (e.g., 1 mL/kg) at a suitable site to at least three male rats (both sexes might be used if warranted). The disposition of the test chemical should be monitored for oral dosing as outlined in paragraph (f)(3)(i) of this section. Metabolite identification will not be required for this study.

(iii) If a biliary excretion study is chosen the oral route of administration may be requested. In this study, the bile ducts of at least three male rats (or of both sexes, if warranted) should be appropriately cannulated and a single dose of the test chemical should be administered to these rats. Following administration of the test chemical, excretion of radioactivity in bile should be monitored as long as necessary to determine if a significant percentage of the administered dose is excreted via this route.

(2) *Tissue distribution time course.* (i) A time course of tissue distribution in selected tissues may be required to aid in the determination of a possible mode of toxic action. This concern may arise from evidence of extended half-life or possible accumulation of radioactivity in specific tissues. The selection of tissues for this type of study will be based upon available evidence of target organ toxicity and/or carcinogenicity, and the number of time points required will be based upon pharmacokinetic information obtained from Tier 1 data. Flexibility will be allowed in the selection of time points to be studied.

(ii) For this type of study, three rats per time point will be administered an appropriate oral dose of test chemical, and the time course of distribution monitored in selected tissues. Only one sex may be required, unless target organ toxicity is observed in sex-specific organs. Assessment of tissue distribution will be made using appropriate techniques for assessment of total amount distributed to tissue and for assessment of metabolite distribution.

(3) *Plasma kinetics.* The purpose of this experiment is to obtain estimates of basic pharmacokinetic parameters (half-life, volume of distribution, absorption rate constant, area under the curve) for the test substance. Kinetic data may be required if the data can be used to resolve issues about bioavailability and to clarify whether clearance is saturated in a dose-dependent fashion. For this experiment a minimum of three rats per group is required. At least two doses will be required, usually the NOEL and LOEL from the critical toxicology study. Following administration of test substance, samples should be obtained from each animal at suitable time points appropriate sampling methodology. Total radioactivity present (or total amount of chemical, for nonradioactive materials) should be analyzed in whole blood and plasma using appropriate methods, and the blood/plasma ratio should be calculated.

(4) *Induction.* (i) Studies addressing possible induction of biotransformation may be requested under one or more of the following conditions:

(A) Available evidence indicates a relationship between induced metabolism and enhanced toxicity.

(B) The available toxicity data indicate a nonlinear relationship between dose and metabolism.

(C) The results of Tier 1 metabolite identification studies show identification of a potentially toxic metabolite.

(D) Induction can plausibly be invoked as a factor in such effects where status may depend on the level of inducible enzymes present. Several *in vivo* and *in vitro* methods are available for assessment of enzyme induction,

and the experiments which best address the issue at hand can be determined between Agency and industry scientists. If induction is demonstrated, the relationship of this phenomenon to toxicity observed from subchronic and/or chronic toxicity studies will need to be addressed.

(ii) [Reserved]

(iii) If toxicologically significant alterations in the metabolic profile of the test chemical are observed through either *in vitro* or *in vivo* experiments, characterization of the enzyme(s) involved (for example, Phase I enzymes such as isozymes of the Cytochrome P450–dependent mono-oxygenase system, Phase II enzymes such as isozymes of sulfotransferase or uridine diphosphate glucuronosyl transferase, or any other relevant enzymes) may be requested. This information will help establish the relevance of the involved enzyme(s) to human risk, as it is known that certain isozymes are present in animal species which are not present in humans, and vice versa.

(5) *Physiologically-based modeling*. Traditional methods of modeling have been used to determine kinetic parameters associated with drug and xenobiotic disposition, but have assumed a purely mathematical construct of mammalian organisms in their operation. On the other hand, more recent models which take into account the physiological processes of the animal have been used with success in defining biological determinants of chemical disposition as well as the relationship between tissue dose and tissue response. These so-called physiologically-based models, also allow for cross-species extrapolation which is often necessary in the risk-assessment process. The use of physiologically-based modeling as an experimental tool for addressing specific issues related to biotransformation and pharmacokinetics of a test substance is encouraged. Information as derived from physiologically-based modeling experiments may aid in the comparison of biotransformation and pharmacokinetics of a test substance between animal species and humans, and in the assessment of risk under specific exposure conditions. At the discretion of the Agency, or by mutual agreement, results of physiologically based pharmacokinetic (PBPK) studies with parent compound may be submitted in lieu of other studies, if it is determined that such data would provide adequate information to satisfy this guideline.

(h) *Reporting of study results*. In addition to the reporting requirements specified under EPA Good Laboratory Practice Standards at 40 CFR part 792, subpart J, the completed study (Tier 1 or Tier 2) should be presented in the following format:

(1) *Title/cover page*. Title page and additional requirements (requirements for data submission, good laboratory practice, statements of data confidentiality claims and quality assurance) if relevant to the study report, should precede the content of the study formatted below. These requirements are to be found in 40 CFR parts 790, 792, and 799.

(2) *Table of contents*. A concise listing must precede the body of the report, containing all essential elements of the study and the page and table number where the element is located in the final report of the study. Essential elements of the table of contents should include a summary, an introduction, the materials and methods section, results, discussion/conclusions, references, tables, figures, appendices, and key subsections as deemed appropriate. The table of contents should include the page number of each of these elements.

(3) *Body of the report*. The body of the report must include information required under this section, organized into sections and paragraphs as follows:

(i) *Summary*. This section of the study report must contain a summary and analysis of the test results and a statement of the conclusions drawn from the analysis. This section should highlight the nature and magnitude of metabolites, tissue residue, rate of clearance, bioaccumulation potential, sex differences, etc. The summary should be presented in sufficient detail to permit independent evaluation of the findings.

(ii) *Introduction*. This section of the report should include the objectives of the study, guideline references, regulatory history, if any, and a rationale.

(iii) *Materials and methods.* This section of the report must include detailed descriptions of all elements including:

(A) *Test substance.* (*1*) This section should include identification of the test substance—chemical name, molecular structure, qualitative and quantitative determination of its chemical composition, and type and quantities of any impurities whenever possible.

(*2*) This section should also include information on physical properties including physical state, color, gross solubility and/or partition coefficient, and stability.

(*3*) The type or description of any vehicle, diluents, suspending agents, and emulsifiers or other materials used in administering the test substance should be stated.

(*4*) If the test substance is radiolabeled, information on the following should be included in this subsection: The type of radionuclide, position of label, specific activity, and radiopurity.

(B) *Test animals.* This section should include information on the test animals, including: Species, strain, age at study initiation, sex, body weight, health status, and animal husbandry.

(C) *Methods.* This subsection should include details of the study design and methodology used. It should include a description of:

(*1*) How the dosing solution was prepared and the type of solvent, if any, used.

(*2*) Number of treatment groups and number of animals per group.

(*3*) Dosage levels and volume.

(*4*) Route of administration.

(*5*) Frequency of dosing.

(*6*) Fasting period (if used).

(*7*) Total radioactivity per animal.

(*8*) Animal handling.

(*9*) Sample collection.

(*10*) Sample handling.

(*11*) Analytical methods used for separation.

(*12*) Quantitation and identification of metabolites.

(*13*) Other experimental measurements and procedures employed (including validation of test methods for metabolite analysis).

(D) *Statistical analysis.* If statistical analysis is used to analyze the study findings, then sufficient information on the method of analysis and the computer program employed should be included so that an independent reviewer/statistician can reevaluate and reconstruct the analysis. Presentation of models should include a full description of the model to allow independent reconstruction and validation of the model.

(iv) *Results.* All data should be summarized and tabulated with appropriate statistical evaluation and placed in the text of this section. Radioactivity counting data should be summarized and presented as appropriate for the study, typically as disintegrations per minute and microgram or milligram equivalents, although other units may be used. Graphic illustrations of the findings, reproduction of representative chromatographic and spectrometric data, and proposed metabolic pathways and molecular structure of metabolites should be included in this section. In addition the following information is to be included in this section if applicable:

(A) Justification for modification of exposure conditions, if applicable.

(B) Justification for selection of dose levels for pharmacokinetic and metabolism studies.

(C) Description of pilot studies used in the experimental design of the pharmacokinetic and metabolism studies, if applicable.

(D) Quantity and percent recovery of radioactivity in urine, feces, and expired air, as appropriate. For dermal studies, include recovery data for treated skin, skin washes, and residual radioactivity in the covering apparatus and metabolic unit as well as results of the dermal washing study.

(E) Tissue distribution reported as percent of administered dose and microgram equivalents per gram of tissue.

(F) Material balance developed from each study involving the assay of body tissues and excreta.

(G) Plasma levels and pharmacokinetic parameters after administration by the relevant routes of exposure.

(H) Rate and extent of absorption of the test substance after administration by the relevant routes of exposure.

(I) Quantities of the test substance and metabolites (reported as percent of

the administered dose) collected in excreta.

(J) Individual animal data.

(v) *Discussion and conclusions.* (A) In this section the author(s) should:

(*1*) Provide a plausible explanation of the metabolic pathway for the test chemical.

(*2*) Emphasize species and sex differences whenever possible.

(*3*) Discuss the nature and magnitude of metabolites, rates of clearance, bioaccumulation potential, and level of tissue residues as appropriate.

(B) The author(s) should be able to derive a concise conclusion that can be supported by the findings of the study.

(vi) *Optional sections.* The authors may include additional sections such as appendices, bibliography, tables, etc.

(i) *Alternate routes of exposure for Tier 1 testing*—(1) *Dermal*—(i) *Dermal treatment.* One (or more if needed) dose levels of the test substance must be used in the dermal portion of the study. The low dose level should be selected in accordance with paragraph (f)(2) of this section. The dermal doses must be dissolved, if necessary, in a suitable vehicle and applied in a volume adequate to deliver the doses. Shortly before testing, fur is to be clipped from the dorsal area of the trunk of the test animals. Shaving may be employed, but it should be carried out approximately 24 hour before the test. When clipping or shaving the fur, care should be taken to avoid abrading the skin, which could alter its permeability. Approximately 10% of the body surface should be cleared for application of the test substance. With highly toxic substances, the surface area covered may be less than approximately 10%, but as much of the area as possible is to be covered with a thin and uniform film. The same nominal treatment surface area must be used for all dermal test groups. The dosed areas are to be protected with a suitable covering which is secured in place. The animals must be housed separately.

(ii) *Dermal washing study.* (A) A washing experiment must be conducted to assess the removal of the applied dose of the test substance by washing the treated skin area with a mild soap and water. A single dose must be applied to two animals in accordance with paragraph (f)(2) of this section. After application (2 to 5 minutes) the treated areas of the animals must be washed with a mild soap and water. The amounts of test substance recovered in the washes must be determined to assess the effectiveness of removal by washing.

(B) Unless precluded by corrosiveness, the test substance must be applied and kept on the skin for a minimum of 6 hours. At the time of removal of the covering, the treated area must be washed following the procedure as outlined in the dermal washing study. Both the covering and the washes must be analyzed for residual test substance. At the termination of the studies, each animal must be sacrificed and the treated skin removed. An appropriate section of treated skin must be analyzed to determine residual radioactivity.

(2) *Inhalation.* A single (or more if needed) concentration of test substance must be used in this portion of the study. The concentration should be selected in accordance with paragraph (f)(2) of this section. Inhalation treatments are to be conducted using a ''nose-cone'' or ''head-only'' apparatus to prevent absorption by alternate routes of exposure. If other inhalation exposure conditions are proposed for use in a chemical-specific test rule, justification for the modification must be documented. A single exposure over a defined period must be used for each group—a typical exposure is 4–6 hours.

[65 FR 78815, Dec. 15, 2000]

§ 799.9780 TSCA immunotoxicity.

(a) *Scope.* This section is intended to meet the testing requirements under section 4 of TSCA. This section is intended to provide information on suppression of the immune system which might occur as a result of repeated exposure to a test chemical. While some information on potential immunotoxic effects may be obtained from hematology, lymphoid organ weights and histopathology (usually done as part of routine toxicity testing), there are data which demonstrate that these endpoints alone are not sufficient to predict immunotoxicity (Luster *et al.*, 1992, 1993 see paragraphs (j)(8) and (j)(9)

of this section). Therefore, the tests described in this section are intended to be used along with data from routine toxicity testing, to provide more accurate information on risk to the immune system. The tests in this section do not represent a comprehensive assessment of immune function.

(b) *Source.* The source material used in developing this TSCA test guideline is the OPPTS harmonized test guideline 870.7800 (June 1996 Public Draft). This source is available at the address in paragraph (j) of this section.

(c) *Definitions.* The following definitions apply to this section.

Antibodies or immunoglobulins (Ig) are part of a large family of glycoprotein molecules. They are produced by B cells in response to antigens, and bind specifically to the eliciting antigen. The different classes of immunoglobulins involved in immunity are IgG, IgA, IgM, IgD, and IgE. Antibodies are found in extracellular fluids, such as serum, saliva, milk, and lymph. Most antibody responses are T cell-dependent, that is, functional T and B lymphocytes, as well as antigen-presenting cells (usually macrophages), are required for the production of antibodies.

Cluster of differentiation (CD) refers to molecules expressed on the cell surface. These molecules are useful as distinct CD molecules are found on different populations of cells of the immune system. Antibodies against these cell surface markers (e.g., CD4, CD8) are used to identify and quantitate different cell populations.

Immunotoxicity refers to the ability of a test substance to suppress immune responses that could enhance the risk of infectious or neoplastic disease, or to induce inappropriate stimulation of the immune system, thus contributing to allergic or autoimmune disease. This section only addresses potential immune suppression.

Natural Killer (NK) cells are large granular lymphocytes which non-specifically lyse cells bearing tumor or viral antigens. NK cells are up-regulated soon after infection by certain microorganisms, and are thought to represent the first line of defense against viruses and tumors.

T and B cells are lymphocytes which are activated in response to specific antigens (foreign substances, usually proteins). B cells produce antigen-specific antibodies (see the definition for ''antibodies or immunoglobulins''), and subpopulations of T cells are frequently needed to provide help for the antibody response. Other types of T cell participate in the direct destruction of cells expressing specific foreign (tumor or infectious agent) antigens on the cell surface.

(d) *Principles of the test methods.* (1) In order to obtain data on the functional responsiveness of major components of the immune system to a T cell dependent antigen, sheep red blood cells (SRBC), rats and/or mice[1] shall be exposed to the test and control substances for at least 28 days.[2] The animals shall be immunized by intravenous or intraperitoneal injection of SRBCs approximately 4 days (depending on the strain of animal) prior to the end of the exposure. At the end of the exposure period, either the plaque forming cell (PFC) assay or an enzyme linked immunosorbent assay (ELISA) shall be performed to determine the effects of the test substance on the splenic anti-SRBC (IgM) response or serum anti-SRBC IgM levels, respectively.

(2) In the event the test substance produces significant suppression of the anti-SRBC response, expression of phenotypic markers for major lymphocyte populations (total T and total B), and T cell subpopulations (T helpers (CD^4) and T cytotoxic/suppressors (CD^8)), as assessed by flow cytometry, may be performed to determine the effects of the test substance on either splenic or peripheral-blood lymphocyte populations and T cell subpopulations. When this study is performed, the appropriate monoclonal antibodies for the species being tested should be used. If the test substance has no significant

[1] If absorption/distribution/metabolism/excretion (ADME) data are similar between species, then either rats or mice may be used for the test compound in question. If such data are lacking, both species should be used.

[2] Because there is a fairly rapid turnover of many of the cells in the immune system, 28 days is considered sufficient for the purposes of the anti-SRBC tests.

effect on the anti-SRBC assay, a functional test for NK cells may be performed to test for a chemical's effect on non-specific immunity.[3] For tests performed using cells or sera from blood (ELISA or flow cytometry), it is not necessary to destroy the animals, since immunization with SRBCs at 28 days is not expected to markedly affect the results of other assays included in subchronic or longer-term studies (these tests are discussed in the reference under paragraph (j)(7) of this section). The necessity to perform either a quantitative analysis of the effects of a chemical on the numbers of cells in major lymphocyte populations and T Cell subpopulations by flow cytometry, or a splenic NK cell activity assay to assess the effects of the test compound on non-specific immunity shall be determined on a case-by-case basis, depending upon the outcome of the anti-SRBC assay.

(e) *Limit test*. If a test at one dose level of at least 1,000 mg/kg body weight (or 2 mg/L for inhalation route of exposure) using the procedures described for this study produces no observable toxic effects or if toxic effects would not be expected based upon data of structurally related compounds, then a full study using three dose levels might not be necessary. Expected human exposure may indicate the need for a higher dose level.

(f) *Test procedures*—(1) *Animal selection*—(i) *Species and strain*. These tests are intended for use in rats and/or mice. Commonly used laboratory strains shall be employed.[4] All test animals shall be free of pathogens, internal and external parasites. Females shall be nulliparous and nonpregnant. The species, strain, and source of the animals shall be identified.

(ii) *Age/weight*. (A) Young, healthy animals shall be employed. At the commencement of the study, the weight variation of the animals used shall not exceed ±20% of the mean weight for each sex.

(B) Dosing shall begin when the test animals are between 6 and 8 weeks old.

(iii) *Sex*. Either sex may be used in the study; if one sex is known or believed to be more sensitive to the test compound, then that sex shall be used.

(iv) *Numbers*. (A) At least eight animals shall be included in each dose and control group. The number of animals tested shall yield sufficient statistical power to detect a 20% change based upon the interanimal variation which may be encountered in these assays.

(B) To avoid bias, the use of adequate randomization procedures for the proper allocation of animals to test and control groups is required.

(C) Each animal shall be assigned a unique identification number. Dead animals, their preserved organs and tissues, and microscopic slides shall be identified by reference to the animal's unique number.

(v) *Husbandry*. (A) Animals may be group-caged by sex, but the number of animals per cage shall not interfere with clear observation of each animal. The biological properties of the test substance or toxic effects (e.g., morbidity, excitability) may indicate a need for individual caging.

(B) The temperature of the experimental animal rooms shall be at 22 ±3 °C.

(C) The relative humidity of the experimental animal rooms shall be between 30 and 70%.

(D) Where lighting is artificial, the sequence shall be 12 hrs light, 12 hrs dark.

(E) Control and test animals shall be maintained on the same type of bedding and receive feed from the same lot. The feed shall be analyzed to assure adequacy of nutritional requirements of the species tested and for impurities that might influence the outcome of the test. Rodents shall be fed and watered *ad libitum* with food replaced at least weekly.

(F) The study shall not be initiated until the animals have been allowed an adequate period of acclimatization or

[3] When these optional tests are included, the phenotypic or NK cell analyses may be performed at 28 days of exposure, or at a later timepoint if ADME data suggest that a longer exposure is more appropriate.

[4] The study director shall be aware of strain differences in response to SRBC. For example, if the $B_6C_3F_1$ hybrid mouse is used in the PFC assay, a response of 800–1,000 PFC/10^6 spleen cells in control mice should be the minimally acceptable PFC response.

quarantine to environmental conditions. The period of acclimatization shall be at least 1 week in duration.

(2) *Control and test substances.* (i) The test substance shall be dissolved or suspended in a suitable vehicle. Ideally, if a vehicle or diluent is needed, it shall not elicit toxic effects or substantially alter the chemical or toxicological properties of the test substance. It is recommended that an aqueous solution should be used. If solubility is a problem a solution in oil may be used. Other vehicles may be considered, but only as a last resort.

(ii) One lot of the test substance shall be used, if possible, throughout the duration of the study, and the research sample shall be stored under conditions that maintain its purity and stability. Prior to the initiation of the study, there shall be a characterization of the test substance, including the purity of the test compound and if technically feasible, the name and quantities of any known contaminants and impurities.

(iii) If the test or positive control substance is to be incorporated into feed or another vehicle, the period during which the test substance is stable in such a mixture shall be determined prior to the initiation of the study. Its homogeneity and concentration shall also be determined prior to the initiation of the study and periodically during the study. Statistically randomized samples of the mixture shall be analyzed to ensure that proper mixing, formulation, and storage procedures are being followed, and that the appropriate concentration of the test or control substance is contained in the mixture.

(3) *Control groups.* (i) A concurrent, vehicle-treated control group is required.

(ii) A separate untreated control group is required if the toxicity of the vehicle is unknown.

(iii) A positive control group with a known immunosuppressant (e.g., cyclophosphamide) shall be included in the study. A group of at least eight animals shall be given the immunosuppressive chemical.

(4) *Dose levels.* (i) In repeated-dose toxicity tests, it is desirable to have a dose-response relationship and a no observed immunotoxic effect level. Therefore, at least three dose levels and a negative control shall be used, unless a limit test is performed as specified under paragraph (e) of this section.

(ii) The highest dose level shall not produce significant stress, malnutrition, or fatalities, but ideally should produce some measurable sign of general toxicity (e.g., a 10% loss of body weight).

(iii) The lowest dose level ideally shall not produce any evidence of immunotoxicity.

(5) *Administration of the test substance.* (i) The test substance, vehicle, or positive control substance shall be administered for at least 28 days for the anti-SRBC assay. The route of administration of the test material will usually be oral; however, this shall be determined by the likely route of occupational or indoor exposure. Therefore, under certain conditions, the dermal or inhalation route of exposure may be more relevant for the study. All animals shall be dosed by the same method during the entire experimental period.

(ii) If the test substance is administered by gavage, the animals are dosed with the test substance ideally on a 7-days-per-week basis. However, based primarily on practical considerations, dosing by gavage on a 5-days-per-week basis shall be acceptable. If the test substance is administered in the drinking water, or mixed directly into the diet, then exposure shall be on a 7-days-per-week basis.

(A) For substances of low toxicity, it is important to ensure that when administered in the diet, the quantities of the test substance involved do not interfere with normal nutrition. When the test substance is administered in the diet, either a constant dietary concentration in parts per million (ppm) or a constant dose level in terms of the animal's body weight shall be used; the alternative used should be specified.

(B) For a substance administered by gavage, the dose shall be given at approximately the same time each day, and adjusted at intervals (weekly for mice, twice per week for rats) to maintain a constant dose level in terms of the animal's body weight.

(iii) If the test substance is administered dermally, use paragraphs (f)(5)(iii)(A) through (f)(5)(iii)(D) of this section.

(A) *Dose levels and dose selection.* (*1*) In this test, it is desirable to determine a dose-response relationship as well as a NOEL. Therefore, at least three dose levels plus a control and, where appropriate, a vehicle control (corresponding to the concentration of vehicle at the highest dose level) group should be used. Doses should be spaced appropriately to produce test groups with a range of toxic effects. The data should be sufficient to produce a dose-response curve.

(*2*) The highest dose level should elicit signs of toxicity but not produce severe skin irritation or an incidence of fatality which would prevent a meaningful evaluation. If application of the test substance produces severe skin irritation, the concentration may be reduced, although this may result in a reduction in, or absence of, other toxic effects at the high dose level. If the skin has been badly damaged early in the study, it may be necessary to terminate the study and undertake a new one at lower concentrations.

(*3*) The intermediate dose levels should be spaced to produce a gradation of toxic effects.

(*4*) The lowest dose level should not produce any evidence of toxic effects.

(B) *Preparation of animal skin.* Shortly before testing, fur should be clipped from not less than 10% of the body surface area for application of the test substance. In order to dose approximately 10% of the body surface, the area starting at the scapulae (shoulders) to the wing of the ileum (hipbone) and half-way down the flank on each side of the animal should be shaved. Shaving should be carried out approximately 24 hrs before dosing. Repeated clipping or shaving is usually needed at approximately weekly intervals. When clipping or shaving the fur, care should be taken to avoid abrading the skin which could alter its permeability.

(C) *Preparation of test substance.* (*1*) Liquid test substances are generally used undiluted, except as indicated in paragraph (f)(5)(iii)(A)(*2*) of this section.

(*2*) Solids should be pulverized when possible. The substance should be moistened sufficiently with water or, when necessary, a suitable vehicle to ensure good contact with the skin. When a vehicle is used, the influence of the vehicle on toxicity of, and penetration of the skin by, the test substance should be taken into account.

(*3*) The volume of application should be kept constant, e.g. less than 300 <greek-m≤L for the rat; different concentrations of test solution should be prepared for different dose levels.

(D) *Administration of test substance.* (*1*) The duration of exposure should be at least for 90 days.

(*2*) The animals should be treated with test substance for at least 6 hrs/day on a 7-day per week basis. However, based on practical considerations, application on a 5-day per week basis is acceptable. Dosing should be conducted at approximately the same time each day.

(*3*) The test substance should be applied uniformly over the treatment site.

(*4*) The surface area covered may be less for highly toxic substances. As much of the area should be covered with as thin and uniform a film as possible.

(*5*) During the exposure period, the test substance should be held in contact with the skin with a porous gauze dressing. The test site should be further covered with nonirritating tape to retain the gauze dressing and the test substance and to ensure that the animals cannot ingest the test substance. Restrainers may be used to prevent the ingestion of the test substance, but complete immobilization is not recommended.

(iv) If the test substance is administered by the inhalation route, use the procedures under paragraphs (e)(2), (e)(3), (e)(6), (e)(8), (e)(9), and (e)(10) of 40 CFR 799.9346. The exposure time for the anti-SRBC test shall be at least 28 days.

(6) *Observation period.* Duration of the observation period shall be at least 28 days.

(7) *Observation of animals.* (i) Observations shall be made at least once each day for morbidity and mortality. Appropriate actions shall be taken to

minimize loss of animals to the study (e.g., necropsy of those animals found dead and isolation or euthanasia of weak or moribund animals).

(ii) A careful clinical examination shall be made at least once a week. Observations shall be detailed and carefully recorded, preferably using explicitly defined scales. Observations shall include, but not be limited to: evaluation of skin and fur, eyes and mucous membranes; respiratory and circulatory effects; autonomic effects, such as salivation; central nervous system effects, including tremors and convulsions, changes in the level of motor activity, gait and posture, reactivity to handling or sensory stimuli, grip strength, and stereotypes or bizarre behavior (e.g., self-mutilation, walking backwards).

(iii) Signs of toxicity shall be recorded as they are observed, including the time of onset, degree and duration.

(iv) Food and water consumption shall be determined weekly.

(v) Animals shall be weighed immediately prior to dosing, weekly (twice per week for rats) thereafter, and just prior to euthanasia.

(vi) Any moribund animals shall be removed and euthanized when first noticed. Necropsies shall be conducted on all moribund animals, and on all animals that die during the study.

(vii) The spleen and thymus shall be weighed in all animals at the end of the study.

(g) *Immunotoxicity tests*—(1) *Functional tests*. Either a splenic PFC assay or an ELISA shall be used to determine the response to antigen administration.

(i) *Antibody plaque-forming cell (PFC) assay*. If the antibody PFC assay is performed, the criteria listed under paragraphs (g)(1)(i)(A) through (g)(1)(i)(F) of this section shall be adhered to. Assays described in the references under paragraphs (j)(2) and (j)(4) of this section may be used.

(A) The T cell-dependent antigen, SRBC, shall be injected intravenously or intraperitoneally, usually at 24 days after the first dosing with the test substance.[5] Although the optimum response time is usually 4 days after immunization, some strains of test animal may deviate from this time point. The strain to be used shall be evaluated for the optimum day for PFC formation after immunization.

(B) The activity of each new batch of complement shall be determined. For any given study, the SRBCs shall be from a single sheep, or pool of sheep, for which the shelf life and dose for optimum response has been determined.

(C) Modifications of the PFC assay described in paragraph (g)(1)(i) of this section exist and may prove useful; however, the complete citation shall be made for the method used, any modifications to the method shall be reported, and the source and, where appropriate, the activity or purity of important reagents shall be given. Justification or rationale shall be provided for each protocol modification. Discussions of modifications of the PFC assay are available in the references under paragraphs (j)(5),(j)(6), and (j)(10) of this section

(D) Samples shall be randomized and shall be coded for PFC analysis, so that the analyst is unaware of the treatment group of each sample examined.

(E) Spleen cell viability shall be determined.

(F) The numbers of IgM PFC per spleen, and the number of IgM PFC per 10^6 spleen cells shall be reported.

(ii) *Immunoglobulin quantification*. As an alternative to a PFC assay, the effects of the test substance on the antibody response to antigen may be determined by an Enzyme-Linked Immunosorbent Assay (ELISA). Comparison between the PFC and ELISA assays for immunotoxicity assessment are discussed in the references under paragraphs (j)(5), (j)(6), and (j)(10) of this section. Test animals shall be immunized with SRBCs as for the PFC assay. IgM titers in the serum of each test animal shall be determined (usually 4 days after immunization). As with the PFC assay, the optimum dose of SRBCs and optimum time for collection of the sera shall be determined for

[5] If the SRBCs are administered by the intraperitoneal route, the study director should be aware that a low percentage of animals may not respond because the antigen was accidentally injected into the intestinal tract.

the species and strain of animal to be tested. Several methods are described in the reference under paragraph (j)(11) of this section).

(iii) *Natural killer (NK) cell activity*. The methods described in the reference under paragraph (j)(3) of this section may be used to demonstrate the effects of at least 28 days of exposure to a test substance on spontaneous cytotoxic activity. In this assay, splenocytes from treated and untreated test animals are incubated with ^{51}Cr-labeled YAC-1 lymphoma cells. The amount of radiolabel released from the target cells after incubation with the effector cells for four hrs is used as a measure of NK cytolysis. The following points shall be adhered to when using the NK cell assay:

(A) Assay controls shall be included to account for spontaneous release of radiolabel from target cells in the absence of effector cells, and also for the determination of total release of radiolabel.

(B) Target cells other than YAC-1 lymphoma cells may be appropriate for use in the assay. In all cases, target cell viability shall be determined.

(C) Modifications of the protocol exist that may prove useful. However, complete citation shall be made to the method used. Modifications shall be reported, and where appropriate, the source, activity, and/or purity of the reagents should be given. Justification or rationale shall be provided for each protocol modification.

(2) *Enumeration of splenic or peripheral blood total B cells, total T cells, and T cell subpopulations*. The phenotypic analysis of total B cell, total T cell, and T cell subpopulations from the spleen or peripheral blood by flow cytometry should be performed after at least 28 days of dosing; this may be performed at a later timepoint, if ADME data suggest that a longer exposure is more appropriate. If an exposure period longer than 28 days is used, then these tests may be performed in conjunction with subchronic (ninety day oral, dermal, or inhalation) toxicity studies, when these studies are required. Methods described in the references under paragraphs (j)(1) and (j)(5) of this section may be used.

(h) *Data and reporting*—(1) *Treatment of results*—(i) Data shall be summarized in tabular form, showing for each test group the number of animals at the start of the test, the number of animals showing effects, the types of effects and the percentage of animals displaying each type of effect.

(ii) All observed results, quantitative and incidental, shall be evaluated by an appropriate statistical method. Any generally accepted statistical methods may be used; the statistical methods including significance criteria shall be selected during the design of the study.

(2) *Evaluation of study results*. The findings of an immunotoxicity study shall be evaluated in conjunction with the findings of preceding studies and considered in terms of other toxic effects. The evaluation shall include the relationship between the dose of the test substance and the presence or absence, and the incidence and severity of abnormalities, including behavioral and clinical abnormalities, gross lesions, identified target organs, body weight changes, effects on mortality and any other general or specific toxic effects. A properly conducted test shall provide a satisfactory estimation of a no-observed-effect level. It may indicate the need for an additional study and provide information on the selection of dose levels.

(3) *Test report*. In addition to the reporting requirements as specified under 40 CFR part 792, subpart J, the following specific information shall be reported. Both individual and summary data should be presented.

(i) The test substance characterization shall include:

(A) Chemical identification.

(B) Lot or batch number.

(C) Physical properties.

(D) Purity/impurities.

(E) Identification and composition of any vehicle used.

(ii) The test system shall contain data on:

(A) Species, strain, and rationale for selection of animal species, if other than that recommended.

(B) Age, body weight data, and sex.

(C) Test environment including cage conditions, ambient temperature, humidity, and light/dark periods.

(D) When inhalation is the route of exposure, a description of the exposure equipment and data shall be included as follows:

(*1*) Description of test conditions; the following exposure conditions shall be reported:

(*i*) Description of exposure apparatus including design, type, volume, source of air, system for generating aerosols, method of conditioning air, treatment of exhaust air and the method of housing the animals in a test chamber.

(*ii*) The equipment for measuring temperature, humidity, and particulate aerosol concentrations and size should be described.

(*2*) Exposure data shall be tabulated and presented with mean values and a measure of variability (e.g., standard deviation) and include:

(*i*) Airflow rates through the inhalation equipment.

(*ii*) Temperature and humidity of air.

(*iii*) Actual (analytical or gravimetric) concentration in the breathing zone.

(*iv*) Nominal concentration (total amount of test substance fed into the inhalation equipment divided by volume of air).

(*v*) Particle size distribution, calculated mass median aerodynamic diameter (MMAD) and geometric standard deviation (GSD).

(*vi*) Explanation as to why the desired chamber concentration and/or particle size could not be achieved (if applicable) and the efforts taken to comply with this aspect of the section.

(E) Identification of animal diet.

(iii) The test procedure shall include the following data:

(A) Method of randomization used.

(B) Full description of experimental design and procedure.

(C) Dose regimen including levels, methods, and volume.

(iv) Test results should include the following data:

(A) Group animal toxic response data shall be tabulated by species, strain, sex, and exposure level for:

(*1*) Number of animals exposed.

(*2*) Number of animals showing signs of toxicity.

(*3*) Number of animals dying.

(B) Individual animal data shall be presented, as well as summary (group mean data).

(C) Date of death during the study or whether animals survived to termination.

(D) Date of observation of each abnormal sign and its subsequent course.

(E) Absolute and relative spleen and thymus weight data.

(F) Feed and water consumption data, when collected.

(G) Results of immunotoxicity tests.

(H) Necropsy findings of animals that were found moribund and euthanized or died during the study.

(I) Statistical treatment of results, where appropriate.

(i) *Quality control.* A system shall be developed and maintained to assure and document adequate performance of laboratory staff and equipment. The study shall be conducted in compliance with the 40 CFR Part 792—Good Laboratory Practice.

(j) *References.* For additional background information on this test guideline, the following references should be consulted. These references are available at the addresses in § 700.17(b)(1) and (2) of this chapter.

(1) Cornacoff, J.B., Graham, C.S., and LaBrie, T.K. Eds. Burleson, G.R., Dean, J.H., and Munson, A.E. Phenotypic identification of peripheral blood mononuclear leukocytes by flow cytometry as an adjunct to immunotoxicity evaluation. Vol. 1. *Methods in Immunotoxicology* (Wiley-Liss, Inc., New York, 1995) pp. 211–226.

(2) Cunningham, A.J. A method of increased sensitivity for detecting single antibody-forming cells. *Nature*. 207:1106–1107 (1965).

(3) Djeu, Julie Y. Eds. Burleson, G.R., Dean, J.H., and Munson, A.E. Natural Killer Activity. *Methods in Immunotoxicology*. pp. 437–449 (1995).

(4) Holsapple, M.P. Eds. Burleson, G.R., Dean, J.H., and Munson, A.E. The plaque-forming cell (PFC) response in Immunotoxicology: An approach to monitoring the primary effector function of B lymphocytes. Vol. 1. *Methods in Immunotoxicology* (Wiley-Liss, Inc., New York, 1995) pp. 71–108.

(5) Ladics, G.S. and Loveless, S.E. Cell surface marker analysis of splenic lymphocyte populations of the CD rat

for use in immunotoxicological studies. *Toxicology Methods*. 4: 77–91 (1994).

(6) Ladics, G.S., Smith, C., Heaps, K., and Loveless, S.E. Evaluation of the humoral immune response of CD rats following a 2-week exposure to the pesticide carbaryl by the oral, dermal, or inhalation routes. *Journal of Toxicology Environmental Health*. 42:143–156 (1994).

(7) Ladics., G.S., Smith, C., Heaps, K., Elliot, G.S., Slone, T.W., and Loveless, S.E. Possible incorporation of an immunotoxicological functional assay for assessing humoral immunity for hazard identification purposes in rats on standard toxicology study. *Toxicology*. 96:225–238 (1995).

(8) Luster, M.I., Portier, C., Pait, D.G., White, K.L., Jr., Gennings, C., Munson, A.E., and Rosenthal, G.J. Risk assessment in immunotoxicology I. Sensitivity and predictability of immune tests. *Fundamental Applied Toxicology*. 18:200–210 (1992).

(9) Luster, M.I., Portier, C., Pait, D.G., Rosenthal, G.J. Germolec. D.R., Corsini, E., Blaylock, B.L., Pollock, P., Kouchi, Y., Craig, W., White, D.L., Munson, A.E., and Comment, C.E. Risk Assessment in Immunotoxicology II. Relationships Between Immune and Host Resistance Tests. *Fundamental Applied Toxicology*. 21:71–82 (1993).

(10) Temple, L., Kawabata, T. T., Munson, A. E., and White, Jr., K. L. Comparison of ELISA and plaque-forming cell assays for measuring the humoral immune response to SRBC in rats and mice treated with benzo[a]pyrene or cyclophosphamide. *Fundamental Applied Toxicology*. 21:412–419 (1993).

(11) Temple, L., Butterworth, L., Kawabata, T.T., Munson, A.E., and White, Jr., K.L. Eds. Burleson, G.R., Dean, J.H., and Munson, A.E. ELISA to Measure SRBC Specific Serum IgM: Method and Data Evaluation. Vol. 1. *Methods in Immunotoxicology* (Wiley-Liss, Inc., New York, 1995) pp. 137–157.

[62 FR 43824, Aug. 15, 1997, as amended at 77 FR 46294, Aug. 3, 2012]

SUBCHAPTERS S–T [RESERVED]