AUTHENTICATED
U.S. GOVERNMENT
INFORMATION
GPO

PART 11—REQUIREMENTS FOR OFFICER ENDORSEMENTS

Subpart A—General

Sec.
11.101 Purpose of regulations.
11.102 Incorporation by reference.
11.103–11.105 [Reserved]
11.107 Paperwork approval.
11.109–11.113 [Reserved]

Subpart B—General Requirements for Officer Endorsements

11.201 General requirements for national and STCW officer endorsements.
11.203–11.210 [Reserved]
11.211 Creditable service and equivalents for national and STCW officer endorsements.
11.212–11.216 [Reserved]
11.217 Examination procedures and denial of officer endorsements.
11.219–11.223 [Reserved]

Subpart C—STCW Officer Endorsements

11.301 Requirements for STCW officer endorsements.
11.302 Basic training.
11.303 Advanced firefighting.
11.304 STCW deck officer endorsements.
11.305 Requirements to qualify for an STCW endorsement as master of vessels of 3,000 GT or more (management level).
11.307 Requirements to qualify for an STCW endorsement as chief mate of vessels of 3,000 GT or more (management level).
11.309 Requirements to qualify for an STCW endorsement as officer in charge of a Navigational Watch (OICNW) on vessels of 500 GT or more (operational level).
11.311 Requirements to qualify for an STCW endorsement as master on vessels of 500 GT or more and less than 3,000 GT (management level).
11.313 Requirements to qualify for an STCW endorsement as chief mate on vessels of 500 GT or more and less than 3,000 GT (management level).
11.315 Requirements to qualify for an STCW endorsement as master on vessels of less than 500 GT (management level).
11.317 Requirements to qualify for an STCW endorsement as master on vessels of less than 500 GT limited to near-coastal waters (management level).
11.319 Requirements to qualify for an STCW endorsement as Officer in Charge of a Navigational Watch (OICNW) on vessels of less than 500 GT (operational level).
11.321 Requirements to qualify for an STCW endorsement as Officer in Charge of a Navigational Watch (OICNW) on vessels of less than 500 GT limited to near-coastal waters (operational level).
11.323 STCW engineer officer endorsements.
11.325 Requirements to qualify for an STCW endorsement as chief engineer officer on vessels powered by main propulsion machinery of 3,000 kW/4,000 HP propulsion power or more (management level).
11.327 Requirements to qualify for an STCW endorsement as second engineer officer on vessels powered by main propulsion machinery of 3,000 kW/4,000 HP propulsion power or more (management level).
11.329 Requirements to qualify for an STCW endorsement as Officer in Charge on an Engineering Watch (OICEW) in a manned engineroom, or as a designated duty engineer in a periodically unmanned engineroom, on vessels powered by main propulsion machinery of 750 kW/1,000 HP propulsion power or more (operational level).
11.331 Requirements to qualify for an STCW endorsement as chief engineer officer on vessels powered by main propulsion machinery of 750 kW/1,000 HP or more and less than 3,000 kW/4,000 HP propulsion power (management level).
11.333 Requirements to qualify for an STCW endorsement as second engineer officer on vessels powered by main propulsion machinery of 750 kW/1,000 HP or more and less than 3,000 kW/4,000 HP propulsion power (management level).
11.335 Requirements to qualify for an STCW endorsement as an electro-technical officer on vessels powered by main propulsion machinery of 750 kW/1,000 HP or more (operational level).
11.337 Requirements to qualify for an STCW endorsement as vessel security officer.

Subpart D—Professional Requirements for National Deck Officer Endorsements

11.401 Ocean and near-coastal national officer endorsements.
11.402 Tonnage requirements for national ocean or near-coastal endorsements for vessels of 1,600 GRT or more.
11.403 Structure of national deck officer endorsements.
11.404 Service requirements for master of ocean or near-coastal self-propelled vessels of unlimited tonnage.
11.405 Service requirements for chief mate of ocean or near-coastal self-propelled vessels of unlimited tonnage.
11.406 Service requirements for second mate of ocean or near-coastal self-propelled vessels of unlimited tonnage.
11.407 Service requirements for third mate of ocean or near-coastal self-propelled vessels of unlimited tonnage.
11.410 Requirements for deck officer endorsements for vessels of less than 1,600 GRT.
11.412 Service requirements for master on ocean or near-coastal self-propelled vessels of less than 1,600 GRT.

11.414 Service requirements for mate on ocean self-propelled vessels of less than 1,600 GRT.
11.416 Service requirements for mate on near-coastal self-propelled vessels of less than 1,600 GRT.
11.418 Service requirements for master on ocean or near-coastal self-propelled vessels of less than 500 GRT.
11.420 Service requirements for mate on ocean self-propelled vessels of less than 500 GRT.
11.421 Service requirements for mate on near-coastal self-propelled vessels of less than 500 GRT.
11.422 Tonnage limitations and qualifying requirements for endorsements as master or mate on vessels of less than 200 GRT.
11.424 Requirements for master on ocean self-propelled vessels of less than 200 GRT.
11.425 Requirements for mate on ocean self-propelled vessels of less than 200 GRT.
11.426 Requirements for master on near-coastal self-propelled vessels of less than 200 GRT.
11.427 Requirements for mate on near-coastal self-propelled vessels of less than 200 GRT.
11.428 Requirements for master on near-coastal self-propelled vessels of less than 100 GRT.
11.429 Requirements for a limited master on near-coastal self-propelled vessels of less than 100 GRT.
11.430 Endorsements for the Great Lakes and inland waters.
11.431 Tonnage requirements for Great Lakes and inland endorsements for vessels of 1,600 GT or more.
11.433 Requirements for master of Great Lakes and inland self-propelled vessels of unlimited tonnage.
11.435 Requirements for master of inland self-propelled vessels of unlimited tonnage.
11.437 Requirements for mate of Great Lakes and inland self-propelled vessels of unlimited tonnage.
11.442 Requirements for master of Great Lakes and inland self-propelled vessels of less than 1,600 GRT.
11.444 Requirements for mate of Great lakes and inland self-propelled vessels of less than 1,600 GRT.
11.446 Requirements for master of Great Lakes and inland self-propelled vessels of less than 500 GRT.
11.448 Requirements for mate of Great Lakes and inland self-propelled vessels of less than 500 GRT.
11.450 Tonnage limitations and qualifying requirements for endorsements as master or mate of Great Lakes and inland vessels of less than 200 GRT.
11.452 Requirements for master of Great Lakes and inland self-propelled vessels of less than 200 GRT.
11.454 Requirements for mate of Great Lakes and inland self-propelled vessels of less than 200 GRT.
11.455 Requirements for master of Great Lakes and inland self-propelled vessels of less than 100 GRT.
11.456 Requirements for limited master of Great Lakes and inland self-propelled vessels of less than 100 GRT.
11.457 Requirements for master of inland self-propelled vessels of less than 100 GRT.
11.459 Requirements for national endorsement as master or mate on rivers.
11.462 Requirements for national endorsement as master or mate of uninspected fishing industry vessels.
11.463 General requirements for national endorsements as master, mate (pilot), and apprentice mate (steersman) of towing vessels.
11.464 Requirements for national endorsements as master of towing vessels.
11.465 Requirements for national endorsements as mate (pilot) of towing vessels.
11.466 Requirements for national endorsements as apprentice mate (steersman) of towing vessels.
11.467 Requirements for a national endorsement as operator of uninspected passenger vessels of less than 100 GRT.
11.468 National officer endorsements for mobile offshore drilling units (MODUs).
11.470 National officer endorsements as offshore installation manager.
11.472 National officer endorsements as barge supervisor.
11.474 National officer endorsements as ballast control operator.
11.480 Radar observer.
11.482 Assistance towing.
11.491 National officer endorsements for service on offshore supply vessels.
11.493 Master (OSV).
11.495 Chief mate (OSV).
11.497 Mate (OSV).

Subpart E—Professional Requirements for National Engineer Officer Endorsements

11.501 Grades and types of national engineer endorsements issued.
11.502 General requirements for national engineer endorsements.
11.503 Propulsion power limitations for national endorsements.
11.504 Application of deck service for national limited engineer endorsements.
11.505 National engineer officer endorsements.
11.510 Service requirements for national endorsement as chief engineer on steam, motor, and/or gas turbine-propelled vessels.

11.512 Service requirements for national endorsement as first assistant engineer of steam, motor, and/or gas turbine-propelled vessels.
11.514 Service requirements for national endorsement as second assistant engineer of steam, motor, and/or gas turbine-propelled vessels.
11.516 Service requirements for national endorsement as third assistant engineer of steam, motor, and/or gas turbine-propelled vessels.
11.518 Service requirements for national endorsement as chief engineer (limited) of steam, motor, and/or gas turbine-propelled vessels.
11.522 Service requirements for national endorsement as assistant engineer (limited) of steam, motor, and/or gas turbine-propelled vessels.
11.524 Service requirements for national endorsement as designated duty engineer (DDE) of steam, motor, and/or gas turbine-propelled vessels.
11.530 Endorsements as engineers of uninspected fishing industry vessels.
11.540 Endorsements as engineers of mobile offshore drilling units (MODUs).
11.542 Endorsement as chief engineer (MODU).
11.544 Endorsement as assistant engineer (MODU).
11.551 Endorsements for service on offshore supply vessels.
11.553 Chief engineer (OSV).
11.555 Assistant engineer (OSV).

Subpart F—Credentialing of Radio Officers

11.601 Applicability.
11.603 Requirements for radio officers' endorsements.
11.604 Requirements for an STCW endorsement for Global Maritime Distress and Safety System (GMDSS) radio operators.

Subpart G—Professional Requirements for Pilots

11.701 Scope of pilot endorsements.
11.703 Service requirements.
11.705 Route familiarization requirements.
11.707 Examination requirements.
11.709 Annual physical examination requirements.
11.711 Tonnage requirements.
11.713 Requirements for maintaining current knowledge of waters to be navigated.

Subpart H—Registration of Staff Officers and Miscellaneous Endorsements

11.801 Applicability.
11.803 Staff departments.
11.805 General requirements.
11.807 Experience requirements for registry.
11.821 High-speed craft-type rating.

Subpart I—Subjects of Examinations

11.901 General provisions.
11.903 Officer endorsements requiring examinations.
11.910 Subjects for deck officer endorsements.
11.920 Subjects for MODU endorsements.
11.950 Examination subjects for engineer officer endorsements.

Subpart J—Recognition of Other Parties' STCW Certificates

11.1001 Purpose of rules.
11.1003 General requirements.
11.1005 Employer application requirements.
11.1007 Basis for denial.
11.1009 Restrictions.

Subpart K—Officers on a Passenger Ship When on an International Voyage

11.1101 Purpose of rules.
11.1103 Definitions.
11.1105 General requirements for officer endorsements.

AUTHORITY: 14 U.S.C. 633; 31 U.S.C. 9701; 46 U.S.C. 2101, 2103, and 2110; 46 U.S.C. chapter 71; 46 U.S.C. 7502, 7505, 7701, 8906, and 70105; Executive Order 10173; Department of Homeland Security Delegation No. 0170.1. Section 11.107 is also issued under the authority of 44 U.S.C. 3507.

SOURCE: USCG–2004–17914, 78 FR 77909, Dec. 24, 2013, unless otherwise noted.

Subpart A—General

§ 11.101 Purpose of regulations.

(a) The purpose of this part is to provide—

(1) A means of determining the qualifications an applicant must possess to be eligible for an officer endorsement as a staff officer, deck officer, engineer officer, pilot, or radio officer on merchant vessels, or for an endorsement to operate uninspected passenger vessels; and

(2) A means of determining that an applicant is competent to serve as a master, chief mate, officer in charge of a navigational watch, chief engineer officer, second engineer officer (first assistant engineer), officer in charge of an engineering watch, designated duty engineer, or Global Maritime Distress and Safety System (GMDSS) radio operator, in accordance with the provisions of the International Convention

on Standards of Training, Certification and Watchkeeping for Seafarers, 1978, as amended (the STCW Convention or STCW), and other laws, and to receive the appropriate endorsement as required by STCW.

(b) With few exceptions, these regulations do not specify or restrict officer endorsements to particular types of service such as tankships, freight vessels, or passenger vessels. However, each officer credentialed under this part must become familiar with the relevant characteristics of a vessel prior to assuming his or her duties as required in the provisions of § 15.405 of this subchapter.

(c) The regulations previously found in subpart C of this part that prescribe the requirements applicable to approved training courses, training for a particular officer endorsement, and training and assessment associated with meeting the standards of competence established by the STCW Convention have been moved to 46 CFR part 10, subpart C.

§ 11.102 Incorporation by reference.

(a) Certain material is incorporated by reference into this part with the approval of the Director of the Federal Register under 5 U.S.C. 552(a) and 1 CFR part 51. To enforce any edition other than that specified in this section, the Coast Guard must publish a notice of change in the FEDERAL REGISTER and the material must be available to the public. All approved material is available for inspection at the Coast Guard, Office of Operating and Environmental Standards (CG–CG–OES), 2100 2nd St. SW., Stop 7126, Washington, DC 20593–7126, 202–372–1405 and is available from the sources listed below. It is also available for inspection at the National Archives and Records Administration (NARA). For information on the availability of this material at NARA, call 202–741–6030 or go to *http://www.archives.gov/federal_register/code_of_federal_regulations/ibr_locations.html.*

(b) International Maritime Organization (IMO), 4 Albert Embankment, London SE1 7SR, England:

(1) The International Convention on Standards of Training, Certification and Watchkeeping for Seafarers, 1978, as amended, 2011 (the STCW Convention or the STCW), incorporation by reference approved for §§ 11.201, 11.426, 11.427, 11.428, 11.429, 11.493, 11.495, 11.497, 11.553, 11.555, 11.1001, 11.1003, 11.1009, and 11.1105.

(2) The Seafarers' Training, Certification and Watchkeeping Code, as amended, 2011 (the STCW Code), incorporation by reference approved for §§ 11.201, 11.301, 11.302, 11.303, 11.305, 11.307, 11.309, 11.311, 11.313, 11.315, 11.317, 11.319, 11.321, 11.325, 11.327, 11.329, 11.331, 11.333, 11.335, 11.604, 11.901, and 11.1105.

(3) The International Convention for the Safety of Life at Sea, 1974 (SOLAS), incorporation by reference approved for § 11.601.

§§ 11.103–11.105 [Reserved]

§ 11.107 Paperwork approval.

(a) This section lists the control numbers assigned by the Office of Management and Budget (OMB) under the Paperwork Reduction Act of 1980 (Pub. L. 96–511) for the reporting and recordkeeping requirements in this part.

(b) The following control numbers have been assigned to the sections indicated:

(1) OMB 1625–0040–46 CFR 11.201, 11.202, 11.205, 11.470, 11.472, 11.474, 11.542, and 11.544.

(2) OMB 1625–028–46 CFR 11.480.

§§ 11.109–11.113 [Reserved]

Subpart B—General Requirements for Officer Endorsements

§ 11.201 General requirements for national and STCW officer endorsements.

(a) *General.* In addition to the requirements of part 10 of this subchapter, the applicant for an officer endorsement, whether original, renewal, duplicate, or raise of grade, must establish to the satisfaction of the Coast Guard that he or she possesses all the qualifications necessary (including but not limited to age, experience, character, physical health, citizenship, approved training, professional competence, and a test for dangerous drugs) before the Coast Guard will issue to him or her a merchant mariner

credential (MMC). An applicant for any STCW endorsement must hold the appropriate national endorsement unless otherwise specified.

(b) *English language requirements.* Except as provided in § 11.467(i) of this part, an applicant for an officer endorsement must demonstrate an ability to speak and understand English as found in the navigation rules, aids to navigation publications, emergency equipment instructions, machinery instructions, and radiotelephone communications instructions.

(c) *Experience and service.* (1) Applicants for officer endorsements should refer to § 10.232 of this subchapter for information regarding requirements for documentation and proof of sea service.

(2) An applicant for a national officer endorsement must have at least 3 months of required service on vessels of appropriate tonnage or horsepower within the 3 years immediately preceding the date of application.

(3) No original officer endorsement may be issued to any naturalized citizen based on less experience in any grade or capacity than would have been required of a citizen of the United States by birth.

(4) Experience and service acquired on foreign vessels is creditable for establishing eligibility for an officer endorsement, subject to evaluation by the Coast Guard to determine that it is a fair and reasonable equivalent to service acquired on merchant vessels of the United States, with respect to grade, tonnage, horsepower, waters, and operating conditions. An applicant who has obtained qualifying experience on foreign vessels must submit satisfactory documentary evidence of such service (including any necessary translation into English) in accordance with § 10.232 of this subchapter.

(5) No applicant for an original officer endorsement who is a naturalized citizen and who has obtained experience on foreign vessels will be given an original officer endorsement in a grade higher than that upon which he or she has actually served while acting under the authority of a foreign credential.

(6) Experience acquired while the applicant was less than 16 years of age is generally not creditable. Compelling circumstances and unique experiences acquired before the applicant reaches 16 years of age will be evaluated on a case-by-case basis.

(d) *Citizenship.* No officer endorsement may be issued to any person who is not a citizen of the United States with the exception of operators of uninspected passenger vessels that are not documented under the laws of the United States.

(e) *Age.* Except as specified in this paragraph, no officer endorsement may be issued to a person who has not attained the age of 21 years. The required evidence of age may be established using any of the items submitted to establish citizenship set out in 49 CFR 1572.17.

(1) An endorsement may be granted to an applicant who has reached the age of 19 years as—

(i) Master of near-coastal, Great Lakes and inland, or river vessels of 25–200 GRT;

(ii) Third mate;

(iii) Third assistant engineer;

(iv) Mate of vessels of between 200 GRT and 1,600 GRT;

(v) Ballast control operator (BCO);

(vi) Assistant engineer (MODU);

(vii) Assistant engineer of fishing industry vessels;

(viii) Mate (pilot) of towing vessels;

(ix) Radio officer;

(x) Assistant engineer (limited); or

(xi) Designated duty engineer of vessels of less than 4,000 HP/3,000 kW.

(2) An endorsement may be granted to an applicant who has reached the age of 18 years as—

(i) Limited master of near-coastal vessels of less than 100 GRT;

(ii) Limited master of Great Lakes and inland vessels of less than 100 GRT;

(iii) Mate of Great Lakes and inland vessels of 25–200 GRT;

(iv) Mate of near-coastal vessels of 25–200 GRT;

(v) Operator of uninspected passenger vessels (OUPV);

(vi) Designated duty engineer of vessels of less than 1,000 HP/750 kW;

(vii) Apprentice mate (steersman) of towing vessels;

(viii) Officer in charge of a navigational watch (OICNW);

(ix) Officer in charge of an engineering watch (OICEW); and

(x) Electro-technical officer (ETO).

(f) *Physical examination.* (1) Persons serving or intending to serve in the merchant marine service are encouraged to take the earliest opportunity to ascertain, through examination, whether their visual acuity, color vision, hearing, and general physical condition, are such as to qualify them for service in that profession. Any physical impairment or medical condition that would render an applicant incompetent to perform the ordinary duties required of an officer is cause for denial of an officer endorsement.

(2) Applications for an original officer endorsement, raises of grade, and extensions of route, must be current and up to date with respect to service and the physical examination, as appropriate. Physical examinations and applications are valid for 12 months from the date the application is approved.

(g) *Character check.* (1) An individual may apply for an original officer endorsement, or officer or STCW endorsement of a different type, while on probation as a result of administrative action under part 5 of this chapter. The offense for which the applicant was placed on probation will be considered in determining his or her fitness to hold the endorsement applied for. An officer or STCW endorsement issued to an applicant on probation will be subject to the same probationary conditions as were imposed against the applicant's other credential. An applicant may not take an examination for an officer or STCW endorsement during any period of time when a suspension without probation or a revocation is effective against the applicant's currently held license, merchant mariner document (MMD), or MMC, or while an appeal from these actions is pending.

(2) If information about the applicant's habits of life and character is brought to the attention of the Coast Guard after an original license, certificate of registry, or officer endorsement has been issued, and if such information reasonably supports the conclusion that the applicant cannot be entrusted with the duties and responsibilities of the license, certificate of registry, or officer endorsement issued, or indicates that the application for the license, certificate of registry, or officer endorsement was false or incomplete, the Coast Guard may notify the holder in writing that the license, certificate of registry, or officer endorsement is considered null and void, direct the holder to return the credential to the Coast Guard, and advise the holder that, upon return of the credential, the appeal procedures of § 10.237 of this subchapter apply.

(h) *Firefighting certificate.* (1) Applicants for an original officer endorsement in the following categories must present a certificate of completion from a firefighting course of instruction that has been approved by the Coast Guard. The firefighting course must have been completed within the past 5 years, or if it was completed more than 5 years before the date of application, the applicant must provide evidence of maintaining the standard of competence in accordance with the firefighting requirements for the credential sought.

(2) The following categories must meet the requirements for basic and advanced firefighting in Regulations VI/1 and VI/3 of the STCW Convention and Tables A–VI/1–2 and A–VI/3 of the STCW Code (both incorporated by reference, see § 11.102 of this part):

(i) National officer endorsements as master or mate on seagoing vessels of 200 GRT or more.

(ii) All national officer endorsements for master or mate (pilot) of towing vessels, except apprentice mate (steersman) of the vessels, on oceans.

(iii) All national officer endorsements for MODUs.

(iv) All national officer endorsements for engineers.

(v) All national officer endorsements for OSVs.

(vi) All STCW officer endorsements except GMDSS radio operator.

(3) The following categories must meet the requirements for basic firefighting in Regulation VI/1 of the STCW Convention and Table A–VI/1–2 of the STCW Code:

(i) Officer endorsement as master on vessels of less than 500 GT in ocean service.

(ii) All officer endorsements for master or mate (pilot) of towing vessels, except apprentice mate (steersman) of

towing vessels, in all services except oceans.

(4) Applicants for a raise of grade of an officer endorsement who have not previously met the requirements of paragraph (h) of this section must do so.

(i) *First-aid and cardiopulmonary resuscitation (CPR) course certificates.* All applicants for an original officer endorsement, except as provided in §§ 11.429, 11.456, and 11.467 of this part, must present to the Coast Guard—

(1) Evidence of continued competency in STCW basic training in accordance with § 11.302 of this part or a certificate indicating completion not more than 1 year from the date of application of —

(i) The American National Red Cross Standard First Aid course or American National Red Cross Community First Aid & Safety course; or

(ii) A Coast Guard-approved first-aid course; and

(2) A currently valid certificate of completion of a CPR course from either—

(i) The American National Red Cross;

(ii) The American Heart Association; or

(iii) A Coast Guard-approved CPR course.

(j) *Professional examination.* (1) When the Coast Guard finds the applicant's experience and training to be satisfactory, and the applicant is eligible in all other respects, the Coast Guard will authorize examination in accordance with the following requirements:

(i) Except for an endorsement required by the STCW Convention, any applicant for a deck or engineer officer endorsement limited to vessels less than 200 GRT, or an officer endorsement limited to uninspected fishing industry vessels, may request an orally assisted examination instead of any written or other textual examination. If there are textual questions that the applicant has difficulty reading and understanding, the Coast Guard will offer the orally assisted examination. Each officer endorsement based on an orally assisted examination is limited to the specific route and type of vessel upon which the applicant obtained the majority of service.

(ii) The general instructions for administration of examinations and the lists of subjects for all officer endorsements appear in subpart I of this part. The Coast Guard will place in the applicant's file a record indicating the subjects covered.

(iii) An applicant enrolled in an approved comprehensive program of training, service, and assessment will be authorized for an examination not more than 6 months prior to completion of the comprehensive program, provided all sea service and assessments of competency are completed prior to the examination.

(iv) The examination, whether administered orally or by other means, must be conducted only in the English language.

(2) When the application has been approved for examination, the approval is valid for 1 year.

(3) An examination is not required for a staff officer or radio officer endorsement.

(k) *Radar observer.* Applicants for an endorsement as radar observer must present a certificate of completion from a radar observer course as required by § 11.480 of this part.

(l) *Restrictions.* The Coast Guard may modify the service and examination requirements in this part to satisfy the unique qualification requirements of an applicant or distinct group of mariners. The Coast Guard may also lower the age requirement for OUPV applicants. The authority granted by an officer endorsement will be restricted to reflect any modifications made under the authority of this paragraph.

[USCG–2004–17914, 78 FR 77909, Dec. 24, 2013, as amended by USCG–2014–0688, 79 FR 58275, Sept. 29, 2014]

§§ 11.202–11.210 [Reserved]

§ 11.211 Creditable service and equivalents for national and STCW officer endorsements.

(a) Applicants for officer endorsements should refer to § 10.232 of this subchapter for information regarding requirements for documentation and proof of sea service.

(b) Service toward an oceans, near-coastal, or STCW endorsement will be credited as follows:

(1) Service on the Great Lakes will be credited on a day-for-day basis up to

100 percent of the total required service.

(2) Service on inland waters, other than Great Lakes, that are navigable waters of the United States, will be credited on a day-for-day basis for up to 50 percent of the total required service.

(c) *Service on mobile offshore drilling units.* (1) MODU service is creditable for raise of grade of an officer endorsement. Evidence of 1 year of service on MODUs as mate or equivalent while holding an officer endorsement or license as third mate, or as engineering officer of the watch or equivalent while holding an officer endorsement or license as third assistant engineer, is acceptable for a raise of grade to second mate or second assistant engineer, respectively. However, any subsequent raises of grade of unlimited, non-restricted officer licenses or endorsements must include a minimum of 6 months of service on conventional vessels.

(2) Service on MODUs maintaining station by means of dynamic positioning, may be credited as service on conventional vessels for any raise in grade; however, time more than 8 hours each day will not be credited.

(3) A day of creditable MODU service must be a minimum of 4 hours, and no additional credit will be granted for periods of more than 8 hours.

(4) Creditable MODU service excludes time spent ashore due to crew rotation.

(d) *Service on Articulated Tug Barges (ATBs) and Integrated Tug Barges (ITBs).* Service on ATB or Dual Mode ITB units is creditable for an original deck officer endorsement or raise of grade of any deck officer endorsement. Service on an ATB or Dual Mode ITB with an aggregate tonnage of 1,600 GRT/3,000 GT or more is creditable on a two-for-one basis (2 days experience equals 1 day of creditable service) for up to 50 percent of the total service on vessels of 1,600 GRT/3,000 GT or more required for an unlimited officer endorsement. The remaining required service on vessels of more than 1,600 GRT/3,000 GT must be obtained on conventional vessels or Push Mode ITBs.

(e) *Service on towing vessels.* Service as master or mate (pilot) on towing vessels, when the aggregate tonnage of the tug and barges is 1,600 GRT/3,000 GT or more, is creditable, using the aggregate tonnage, on a two-for-one basis (2 days experience equals 1 day of creditable service) for up to 50 percent of the total service on vessels of 1,600 GRT/3,000 GT or more required for an unlimited officer endorsement. The remaining required service on vessels of more than 1,600 GRT/3,000 GT must be obtained on conventional vessels. This service must be documented as specified in § 10.232(a) of this subchapter.

(f) Individuals obtaining sea service as part of an approved training curriculum pursuant to either § 11.407(a)(2) or § 11.516(a)(3) of this part must do so in the capacity of cadet (deck) or cadet (engine), as appropriate, notwithstanding any other rating endorsements the individual may hold or any other capacity in which the individual may have served.

(g) *Other experience.* Other experience in a marine-related area, other than at sea, or sea service performed on unique vessels, will be evaluated by the Coast Guard for a determination of equivalence to traditional service.

(h) *Tonnage.* When determining sea service credit for officer endorsement applicants under subpart D of this part, the tonnage of a vessel solely admeasured using the Convention measurement scheme under 46 U.S.C. Chapter 143 will be credited as Gross Register Tonnage. This paragraph does not apply to those vessels measured under the optional regulatory measurement provisions of 46 U.S.C. 14305.

§§ 11.212–11.216 [Reserved]

§ 11.217 Examination procedures and denial of officer endorsements.

(a) The examination fee set out in Table 1 to § 10.219(a) of this subchapter must be paid before the applicant may take the first examination section. If an applicant fails three or more sections of the examination, a complete re-examination must be taken. On the subsequent exam, if the applicant again fails three or more sections, at least 3 months must elapse before another complete examination is attempted, and a new examination fee is required. If an applicant fails one or

two sections of an examination, the applicant may be retested twice on these sections during the next 3 months. If the applicant does not successfully complete these sections within the 3-month period, a complete re-examination must be taken at least 3 months from the date of the last retest, and a new examination fee is required. The 3-month retest period may be extended by the Coast Guard if the applicant presents evidence documenting sea time that prevented the taking of a retest during the 3-month period. The retest period may not be extended beyond 7 months from the initial examination. All examinations and retests must be completed within 1 year of approval for examination.

(b) If the Coast Guard refuses to grant an applicant the endorsement applied for due to the applicant's failure to pass a required examination, the Coast Guard will provide the applicant with a written statement setting forth the portions of the examination that must be retaken and the date by which the examination must be completed.

§§ 11.219–11.223 [Reserved]

Subpart C—STCW Officer Endorsements

§ 11.301 Requirements for STCW officer endorsements.

(a) *Standard of competence.* (1) The Coast Guard will accept one or more methods listed in the STCW Code to demonstrate meeting the standard of competence in this subpart. See Column 3—Methods for demonstrating competence—of the Tables of Competence in the STCW Code (incorporated by reference, see § 11.102 of this part). The Coast Guard will accept the following as evidence of meeting the standard of competence under each of these methods:

(i) In-service experience: Documentation of successful completion of assessments, approved or accepted by the Coast Guard, and signed by a qualified assessor (QA)—deck or engineering—as appropriate.

(ii) Training ship experience: Documentation of successful completion of an approved training program involving formal training and assessment onboard a training ship.

(iii) Simulator training: Documentation of successful completion of training and assessment from a Coast Guard-approved course involving maritime simulation.

(iv) Laboratory equipment training: Documentation of successful completion of training and assessments from an approved training course or facility.

(v) Practical training or instruction:

(A) Documentation of successful completion of assessment as part of a structured/formal training or instruction provided by an organization or company as part of an accepted safety or quality management system; or

(B) Documentation of successful completion of an approved training course from a school or facility.

(vi) Specialist training: Documentation of successful completion of assessment as part of a company training or specialized training provided by a maritime or equipment specialist.

(vii) Workshop skills training: Documentation of successful completion of assessments or completion certificate from an approved training program, school or facility.

(viii) Training program: Documentation of successful completion of an approved training program.

(ix) Training on a manned scale ship model: Documentation of successful completion of assessment as part of a structured/formal training or instruction provided by an approved training school or facility.

(x) Practical demonstration of competence: Documentation of successful completion of assessments approved or accepted by the Coast Guard.

(xi) Practical test and practical experience: Documentation of successful completion of assessments approved or accepted by the Coast Guard.

(xii) Examination: Successful completion of a Coast Guard examination.

(xiii) Instruction or course: Documentation of successful completion of an approved or accepted course of instruction.

(2) Knowledge components may be documented by—

(i) Successful completion of the Coast Guard examination for the associated officer endorsement;

(ii) Successful completion of an approved course; or

(iii) Successful completion of an approved program.

(3) The Coast Guard will publish assessment guidelines that should be used to document assessments that demonstrate meeting the standard of competence, as required by paragraph (a)(1) of this section. Organizations may develop alternative assessment documentation for demonstrations of competence; however, such documentation must be approved by the Coast Guard prior to its use and submittal with an application.

(b) *Service.* (1) Service as a rating will not be accepted to upgrade from the operational-level to management-level STCW endorsements.

(2) Service on the Great Lakes will be credited on a day-for-day basis for up to 100 percent of the total required service.

(3) Service on inland waters other than Great Lakes, which are navigable waters of the United States, will be credited on a day-for-day basis for up to 50 percent of the total required service.

(4) Service accrued onboard vessels with dual tonnages (both domestic and international) will be credited using the international tonnage for the credential sought.

(5) Applicants who cannot meet the requirement for 1 year of sea service within the last 5 years as described in § 11.303(c) of this subpart, will be required to meet the requirements of § 11.303(a) of this subpart.

(c) *Operational-level endorsement.* Applicants holding national officer endorsements, who seek to add an STCW endorsement at the operational level, must provide evidence of meeting the STCW requirements found in this subpart, including—

(1) Meeting the service requirements for the operational-level STCW endorsement;

(2) Satisfactory completion of the STCW operational-level standards of competence; and

(3) Satisfactory completion of the STCW operational-level training as required in this part.

(d) *Management-level endorsement.* Applicants holding national officer endorsements as master, chief mate, chief engineer, or first assistant engineer, and who seek to add an STCW endorsement at the management level, must provide evidence of meeting the STCW requirements found in this subpart, including—

(1) Meeting the service requirements for the management-level STCW endorsement;

(2) Satisfactory completion of the STCW operational- and management-level standards of competence; and

(3) Satisfactory completion of the STCW operational- and management-level training as required in this part.

(e) *Training and assessment for Automatic Radar Plotting Aids (ARPA), Electronic Chart Display and Information System (ECDIS), or Global Maritime Distress and Safety System (GMDSS).* Training and assessment in the use of ARPA, ECDIS, or GMDSS is not required for those who serve exclusively on ships not fitted with ARPA, ECDIS, or GMDSS. For ARPA and ECDIS, this limitation must be reflected in the endorsement issued to the seafarer concerned. GMDSS is a separate endorsement that will only be added if the applicant qualifies for it.

(f) *Exemptions and Limitations.* (1) The Coast Guard may exempt an applicant from meeting any individual knowledge, understanding, and proficiency required in the appropriate table of competence in the STCW Code. These exemptions must be approved by the Coast Guard based upon vessel type. Under these circumstances, the certificate may include a corresponding limitation. (2) A seafarer may have a limitation removed by providing the Coast Guard with evidence of having completed the individual knowledge, understanding, and proficiency required.

(g) *Grandfathering.* (1) Except as noted otherwise, each candidate who applies for a credential based on approved or accepted training or approved seagoing service that was started on or after March 24, 2014, or who applies for the MMC endorsement on or after January 1, 2017, must meet the requirements of this part.

(2) Except as noted by this subpart, seafarers holding an STCW endorsement prior to March 24, 2014, will not be required to complete any additional

training required under this part to retain the STCW endorsements until January 1, 2017.

(3) Except as noted otherwise, candidates who apply for a credential based on approved or accepted training or approved seagoing service that commenced before March 24, 2014, may qualify under the requirements of this part existing before that date. This includes the assessments published prior to March 24, 2014, as well as the additional requirements for the STCW endorsement section.

(4) Persons who hold or have held an STCW operational-level endorsement issued prior to March 24, 2014 and are seeking to upgrade to an STCW management-level endorsement will not be required to complete the practical assessments for STCW operational-level endorsements as required in paragraph (d)(2) of this section.

(5) Except as noted by this subpart, the Coast Guard will continue to issue STCW endorsements meeting the requirements of this part existing before March 24, 2014, for seafarers identified in paragraph (g)(3) of this section, until January 1, 2017.

(h) Notwithstanding § 11.901 of this part, each mariner found qualified to hold any of the following national officer endorsements will also be entitled to hold an STCW endorsement corresponding to the service or other limitations of the license or officer endorsements on the MMC. The vessels concerned are not subject to further obligation under STCW because of their special operating conditions as small vessels engaged in domestic, near-coastal voyages.

(1) Masters, mates, or engineers endorsed for service on small passenger vessels that are subject to subchapter T or K of this chapter and that operate beyond the boundary line.

(2) Masters, mates, or engineers endorsed for service on seagoing vessels of less than 200 GRT, other than passenger vessels subject to subchapter H of this chapter.

(i) Mariners serving on, and owners or operators of any of the following vessels, do not need to hold an STCW endorsement, because they are exempt from application of STCW:

(1) Fishing vessels as defined in 46 U.S.C. 2101(11)(a).

(2) Fishing vessels used as fish-tender vessels as defined in 46 U.S.C. 2101(11)(c).

(3) Barges as defined in 46 U.S.C. 102, including non-self-propelled mobile offshore drilling units.

(4) Vessels operating exclusively on the Great Lakes or on the inland waters of the United States in the Straits of Juan de Fuca or on the Inside Passage between Puget Sound and Cape Spencer.

(j) Mariners serving on, and owners or operators of uninspected passenger vessels as defined in 46 U.S.C. 2101(42)(B), do not need to hold an STCW endorsement. The vessels concerned are not subject to further obligation under STCW because of their special operating conditions as small vessels engaged in domestic, near-coastal voyages.

[USCG–2004–17914, 78 FR 77909, Dec. 24, 2013, as amended by USCG–2014–0688, 79 FR 58276, Sept. 29, 2014]

§ 11.302 Basic training.

(a) Applicants seeking an STCW officer endorsement must provide evidence of meeting the standard of competence for basic training (BT) as follows:

(1) Personal survival techniques as set out in Table A–VI/1–1 of the STCW Code (incorporated by reference, see § 11.102 of this part).

(2) Fire prevention and firefighting as set out in Table A–VI/1–2 of the STCW Code.

(3) Elementary first aid as set out in Table A–VI/1–3 of the STCW Code.

(4) Personal safety and social responsibilities as set out in Table A–VI/1–4 of the STCW Code.

(b) Every 5 years seafarers qualified in accordance with § 11.301(c) and (d) of this subpart must provide evidence of maintaining the standard of competence for BT.

(c) The Coast Guard will accept onboard training and experience, through evidence of 1 year of sea service within the last 5 years, for the following areas:

(1) Personal survival techniques as set out in Table A–VI/1–1 of the STCW Code:

(i) Donning a lifejacket.

(ii) Boarding a survival craft from the ship, while wearing a lifejacket.

(iii) Taking initial actions on boarding a lifeboat to enhance chance of survival.

(iv) Streaming a lifeboat drogue or sea-anchor.

(v) Operating survival craft equipment.

(vi) Operating location devices, including radio equipment.

(2) Fire prevention and firefighting as set out in Table A–VI/1–2 of the STCW Code:

(i) Using self-contained breathing apparatus.

(ii) Performing a rescue in a smoke-filled space, using an approved smoke-generating device aboard, while wearing a breathing apparatus.

(3) Elementary first aid as set out in Table A–VI/1–3 of the STCW Code.

(4) Personal safety and social responsibilities as set out in Table A–VI/1–4 of the STCW Code.

(d) The Coast Guard will only accept evidence of approved assessments conducted ashore for the following areas:

(1) Personal survival techniques as set out in Table A–VI/1–1 of the STCW Code:

(i) Donning and using an immersion suit.

(ii) Safely jumping from a height into the water.

(iii) Righting an inverted liferaft while wearing a lifejacket.

(iv) Swimming while wearing a lifejacket.

(v) Keeping afloat without a lifejacket.

(2) Fire prevention and firefighting as set out in Table A–VI/1–2 of the STCW Code:

(i) Using various types of portable fire extinguishers.

(ii) Extinguishing smaller fires, e.g., electrical fires, oil fires, and propane fires.

(iii) Extinguishing extensive fires with water, using jet and spray nozzles.

(iv) Extinguishing fires with foam, powder, or any other suitable chemical agent.

(v) Fighting fire in smoke-filled enclosed spaces wearing self-contained breathing apparatus.

(vi) Extinguishing fire with water fog or any other suitable firefighting agent in an accommodation room or simulated engineroom with fire and heavy smoke.

(vii) Extinguishing oil fire with fog applicator and spray nozzles, dry chemical powder, or foam applicators.

(e) Applicants who cannot meet the requirement for 1 year of sea service within the last 5 years, as described in paragraph (c) of this section, will be required to meet the requirements of paragraph (a) of this section or complete approved or accepted refresher training.

§ 11.303 Advanced firefighting.

(a) *Advanced firefighting.* Applicants seeking an STCW officer endorsement must provide evidence of meeting the standard of competence as set out in Table A–VI/3 of the STCW Code (incorporated by reference, see § 11.102 of this part). Applicants for an original STCW officer endorsement, who met the requirements of § 11.201(h) of this part will be deemed to have met the requirement of this paragraph.

(b) Every 5 years seafarers qualified in accordance with paragraph (a) of this section must provide evidence of maintaining the standard of competence as set out in Table A–VI/3 of the STCW Code.

(c) The Coast Guard will accept onboard training and experience, through evidence of 1 year of sea service within the last 5 years, as meeting the requirements of paragraph (b) of this section for the following areas as set out in Table A–VI/3 of the STCW Code:

(1) Control firefighting operations aboard ships with the following knowledge, understanding, and proficiencies:

(i) Firefighting procedures at sea and in port, with particular emphasis on organization, tactics and command.

(ii) Communication and coordination during firefighting operations.

(iii) Ventilation control, including smoke extraction.

(iv) Control of fuel and electrical systems.

(v) Firefighting process hazards (dry distillation, chemical reactions, boiler uptake).

(vi) Fire precautions and hazards associated with the storage and handling of materials.

(vii) Management and control of injured persons.

(viii) Procedures for coordination with shore-based firefighters.

(2) Inspect and service fire-detection and extinguishing systems and equipment.

(i) Requirements for statutory and classification surveys.

(ii) Reserved.

(d) The Coast Guard will only accept evidence of assessments conducted ashore as meeting the requirements of paragraph (b) of this section for the following areas as set out in Table A–VI/3 of the STCW Code:

(1) Control firefighting operations aboard ships with the following knowledge, understanding, and proficiencies:

(i) Use of water for fire-extinguishing, the effect on ship stability, precautions and corrective procedures.

(ii) Firefighting involving dangerous goods.

(2) Organize and train fire parties.

(3) Inspect and service fire-detection and extinguishing systems and equipment.

(i) Fire detection. Fire-detection systems; fixed fire-extinguishing systems; portable and mobile fire-extinguishing equipment, including appliances, pumps and rescue, salvage; life-support; personal protective and communication equipment.

(ii) Reserved.

(4) Investigate and compile reports on incidents involving fire.

(e) Applicants who cannot meet the requirement for 1 year of sea service within the last 5 years, as described in paragraph (c) of this section, will be required to meet the requirements of paragraph (a) of this section or complete approved or accepted refresher training.

§ 11.304 STCW deck officer endorsements.

(a) Specific requirements for all STCW deck officer endorsements are detailed in the applicable sections in this part.

(1) Master on vessels of 3,000 GT or more (management level).

(2) Chief mate on vessels of 3,000 GT or more (management level).

(3) Officer in charge of a navigational watch (OICNW) of vessels of 500 GT or more (operational level).

(4) Master of vessels of 500 GT or more and less than 3,000 GT (management level).

(5) Chief mate of vessels of 500 GT or more and less than 3,000 GT (management level).

(6) Master of vessels of less than 500 GT (management level).

(7) Master of vessels of less than 500 GT limited to near-coastal waters (management level).

(8) OICNW of vessels of less than 500 GT (operational level).

(9) OICNW of vessels of less than 500 GT limited to near-coastal waters (operational level).

(b) [Reserved]

§ 11.305 Requirements to qualify for an STCW endorsement as master of vessels of 3,000 GT or more (management level).

(a) To qualify for an STCW endorsement as master, an applicant must—

(1) Provide evidence of 36 months of service as OICNW on vessels operating in oceans, near-coastal waters, and/or Great Lakes. This period may be reduced to not less than 24 months if the applicant served as chief mate for not less than 12 months. Service on inland waters that are navigable waters of the United States may be substituted for up to 50 percent of the total required service. Experience gained in the engine department on vessels may be creditable for up to 3 months of the service requirements;

(2) Provide evidence of meeting the standard of competence specified in Section A–II/2 of the STCW Code (incorporated by reference, see § 11.102 of this part); and

(3) Provide evidence of having satisfactorily completed approved training in the following subject areas:

(i) Advanced shiphandling.

(ii) Advanced stability.

(iii) Advanced meteorology.

(iv) Leadership and managerial skills.

(v) Search and rescue.

(vi) ARPA, if serving on a vessel with this equipment.

(vii) ECDIS, if serving on a vessel with this equipment.

(viii) GMDSS, if serving on a vessel with this equipment.

(ix) Management of medical care.

(b) For a renewal of an STCW endorsement as master of vessels of 3,000 GT or more to be valid on or after January 1, 2017, each candidate must provide evidence of successful completion of approved training in the following:

(1) Leadership and managerial skills.

(2) ECDIS, if serving on a vessel with this equipment.

(c) The Coast Guard may exempt an applicant from meeting any individual knowledge, understanding, and proficiency required in Section A–II/2 of the STCW Code. These exemptions must be approved by the Coast Guard based upon vessel type. Under these circumstances, the credential may include a corresponding limitation.

(d) Seafarers holding an STCW endorsement as masters of vessels of 500 GT or more and less than 3,000 GT, in accordance with § 11.311 of this subpart, are eligible to apply for the endorsement as master on vessels of 3,000 GT or more upon completion of 6 months of sea service, under the authority of the endorsement, and must complete any items in paragraphs (a)(2) and (a)(3) of this section not previously satisfied.

(e) Seafarers with one of the following national officer endorsements are eligible to apply for this endorsement upon completion of the requirements in table 1 to this paragraph:

TABLE 1 TO § 11.305(e)—STCW ENDORSEMENT AS MASTER OF VESSELS OF 3,000 GT OR MORE

Entry path from national endorsements	Sea service under authority of the endorsement [1]	Competence—STCW Table A–II/2 [2]	Training required by this section [3]
Master ocean or near-coastal, unlimited tonnage	None	Yes	Yes.
Master OSV	None	Yes	Yes.

[1] This column provides the minimum additional service required of the seafarer in order to meet the requirements of this section.
[2] Complete any items in paragraph (a)(2) of this section not previously satisfied.
[3] Complete any items in paragraph (a)(3) of this section not previously satisfied.

[USCG–2004–17914, 78 FR 77909, Dec. 24, 2013, as amended by USCG–2014–0688, 79 FR 58276, Sept. 29, 2014]

§ 11.307 Requirements to qualify for an STCW endorsement as chief mate of vessels of 3,000 GT or more (management level).

(a) To qualify for an STCW endorsement as chief mate, an applicant must—

(1) Provide evidence of 12 months of service as OICNW on vessels operating in oceans, near-coastal waters, and/or Great Lakes. Service on inland waters, bays, or sounds that are navigable waters of the United States may be substituted for up to 50 percent of the total required service. Experience gained in the engine department on vessels may be creditable for up to 1 month of the service requirements;

(2) Meet the standard of competence specified in Section A–II/2 of the STCW Code (incorporated by reference, see § 11.102 of this part); and

(3) Provide evidence of having satisfactorily completed approved training in the following subject areas:

(i) Advanced shiphandling.

(ii) Advanced stability.

(iii) Advanced meteorology.

(iv) Leadership and managerial skills.

(v) Search and rescue.

(vi) ARPA, if serving on a vessel with this equipment.

(vii) ECDIS, if serving on a vessel with this equipment.

(viii) GMDSS, if serving on a vessel with this equipment.

(ix) Management of medical care.

(b) For a renewal of an STCW endorsement as chief mate of vessels of 3,000 GT or more to be valid on or after January 1, 2017, each candidate must provide evidence of successful completion of approved training in the following:

(1) Leadership and managerial skills.

(2) ECDIS, if serving on a vessel with this equipment.

(c) The Coast Guard may exempt an applicant from meeting any individual

knowledge, understanding, and proficiency required in Section A–II/2 of the STCW Code. These exemptions must be approved by the Coast Guard based upon vessel type. Under these circumstances, the credential may include a corresponding limitation.

(d) Seafarers holding an STCW endorsement as chief mate of vessels of 500 GT or more and less than 3,000 GT, in accordance with § 11.313 of this subpart, are eligible to apply for the endorsement as chief mate on vessels of 3,000 GT or more upon completion of 6 months of sea service, under the authority of the endorsement, and must complete any items in paragraphs (a)(2) and (a)(3) of this section not previously satisfied.

(e) Seafarers with one of the following national officer endorsements are eligible to apply for this endorsement upon completion of the requirements in the following table:

TABLE 1 TO § 11.307(e)—STCW ENDORSEMENT AS CHIEF MATE OF VESSELS OF 3,000 GT OR MORE

Entry path from national endorsements	Sea service under authority of the endorsement [1]	Competence—STCW Table A–II/2 [2]	Training required by this section [3]
Chief mate ocean or near-coastal, unlimited tonnage	None	Yes	Yes.
Master ocean or near-coastal, less than 500 GRT	12 months	Yes	Yes.
Chief mate OSV	None	Yes	Yes.
Master towing vessel ocean or near-coastal	12 months	Yes	Yes.

[1] This column provides the minimum additional service required of the seafarer in order to meet the requirements of this section.
[2] Complete any items in paragraph (a)(2) of this section not previously satisfied.
[3] Complete any items in paragraph (a)(3) of this section not previously satisfied.

[USCG–2004–17914, 78 FR 77909, Dec. 24, 2013, as amended by USCG–2014–0688, 79 FR 58276, Sept. 29, 2014]

§ 11.309 Requirements to qualify for an STCW endorsement as Officer in charge of a navigational watch (OICNW) of vessels of 500 GT or more (operational level).

(a) To qualify for an STCW endorsement as OICNW, an applicant must—

(1) Provide evidence of seagoing service as follows:

(i) Thirty-six months of seagoing service in the deck department on vessels operating in oceans, near-coastal waters, and/or Great Lakes. Service on inland waters, bays, or sounds that are navigable waters of the United States may be substituted for up to 50 percent of the total required service; or

(ii) Twelve months of seagoing service as part of an approved training program, which includes onboard training that meets the requirements of Section A–II/1 of the STCW Code (incorporated by reference, see § 11.102 of this part);

(2) Provide evidence of having performed, during the required seagoing service, bridge watchkeeping duties under the supervision of an officer holding the STCW endorsement as master, chief mate, second mate, or OICNW, for a period of not less than 6 months;

(3) Provide evidence of meeting the standard of competence specified in Section A–II/1 of the STCW Code; and

(4) Provide evidence of having satisfactorily completed approved training in the following subject areas:

(i) Medical first-aid provider.

(ii) Radar observer.

(iii) Search and rescue.

(iv) Basic and advanced firefighting in accordance with § 11.303 of this subpart.

(v) Proficiency in survival craft and rescue boats other than fast rescue boats (PSC) or proficiency in survival craft and rescue boats other than lifeboats and fast rescue boats (PSC-limited).

(vi) Visual signaling.

(vii) Bridge resource management (BRM).

(viii) Terrestrial and celestial navigation, and electronic navigation systems.

(ix) Watchkeeping, including International Regulations for Preventing Collisions at Sea (COLREGS) and IMO

standard marine communication phrases (SMCP).

(x) Cargo handling and stowage.

(xi) Ship handling.

(xii) Stability and ship construction.

(xiii) Meteorology.

(xiv) ARPA, if serving on a vessel with this equipment.

(xv) GMDSS, if serving on a vessel with this equipment.

(xvi) ECDIS, if serving on a vessel with this equipment.

(b) Experience gained in the engine department on vessels may be creditable for up to 3 months of the service requirements in paragraph (a)(1)(i) of this section.

(c) For a renewal of an STCW endorsement as OICNW of vessels of 500 GT or more to be valid on or after January 1, 2017, each candidate must provide the following:

(1) Evidence of meeting the standard of competence in leadership and teamworking skills.

(2) Completion of approved training in ECDIS, if serving on a vessel with this equipment.

(d) The Coast Guard may exempt an applicant from meeting any individual knowledge, understanding, and proficiency required in Section A–II/1 of the STCW Code. These exemptions must be approved by the Coast Guard based upon vessel type. Under these circumstances, the credential may include a corresponding limitation.

(e) Seafarers with one of the following national officer endorsements are eligible to apply for this endorsement upon completion of the requirements in the following table:

TABLE 1 TO § 11.309(e)—STCW ENDORSEMENT AS OICNW OF VESSELS OF 500 GT OR MORE

Entry path from national endorsements	Sea service under authority of the endorsement [1]	Competence—STCW Table A–II/2 [2]	Training required by this section [3]
Mate ocean or near-coastal, unlimited tonnage	None	Yes	Yes.
Master ocean or near-coastal, less than 500 GRT	6 months	Yes	Yes.
Mate ocean or near-coastal, less than 1,600 GRT	None	Yes	Yes.
Mate ocean or near-coastal, less than 500 GRT	12 months	Yes	Yes.
Mate OSV	12 months [1]	Yes	Yes.
Mate towing vessel ocean or near-coastal	6 months	Yes	Yes.

[1] This column provides the minimum additional service required of the seafarer in order to meet the requirements of this section.
[2] Complete any items in paragraph (a)(3) of this section not previously satisfied.
[3] Complete any items in paragraph (a)(4) of this section not previously satisfied.

[USCG–2004–17914, 78 FR 77909, Dec. 24, 2013, as amended by USCG–2014–0688, 79 FR 58276, Sept. 29, 2014]

§ 11.311 Requirements to qualify for an STCW endorsement as master of vessels of 500 GT or more and less than 3,000 GT (management level).

(a) To qualify for an STCW endorsement as master, an applicant must—

(1) Provide evidence of 36 months of service as OICNW on vessels operating in oceans, near-coastal waters, and/or Great Lakes. However, this period may be reduced to not less than 24 months if the applicant served as chief mate for not less than 12 months. Service on inland waters, bays, or sounds that are navigable waters of the United States may be substituted for up to 50 percent of the total required service. Experience gained in the engine department on vessels may be creditable for up to 3 months of the service requirements;

(2) Provide evidence of meeting the standard of competence specified in Section A–II/2 of the STCW Code (incorporated by reference, see § 11.102 of this part); and

(3) Provide evidence of having satisfactorily completed approved training in the following subject areas:

(i) Advanced shiphandling.

(ii) Advanced stability.

(iii) Advanced meteorology.

(iv) Leadership and managerial skills.

(v) Search and rescue.

(vi) Management of medical care.

(vii) ECDIS, if serving on a vessel with this equipment.

(viii) ARPA, if serving on a vessel with this equipment.

(ix) GMDSS, if serving on a vessel with this equipment.

(b) For a renewal of an STCW endorsement as master of vessels of 500 GT or more and less than 3,000 GT to be valid on or after January 1, 2017, each candidate must provide evidence of successful completion of approved training in the following:

(1) Leadership and managerial skills.

(2) ECDIS, if serving on a vessel with this equipment.

(c) The Coast Guard may exempt an applicant from meeting any individual knowledge, understanding, and proficiency required in Section A–II/2 of the STCW Code. These exemptions must be approved by the Coast Guard based upon vessel type. Under these circumstances, the credential may include a corresponding limitation.

(d) Seafarers with one of the following national officer endorsements are eligible to apply for this endorsement upon completion of the requirements in the following table:

TABLE 1 TO § 11.311(d)—STCW ENDORSEMENT AS MASTER OF VESSELS OF 500 GT OR MORE AND LESS THAN 3,000 GT

Entry path from national endorsements	Sea service under authority of the endorsement [1]	Competence—STCW Table A–II/3 [2]	Training required by this section [3]
Master oceans or near-coastal, less than 1,600 GRT	None	Yes	Yes.
Master OSV	None	Yes	Yes.
Master oceans or near-coastal, less than 500 GRT	12 months	Yes	Yes.
Master towing vessel oceans or near-coastal	12 months	Yes	Yes.

[1] This column provides the minimum additional service required of the seafarer in order to meet the requirements of this section.
[2] Complete any items in paragraph (a)(2) of this section not previously satisfied.
[3] Complete any items in paragraph (a)(3) of this section not previously satisfied.

[USCG–2004–17914, 78 FR 77909, Dec. 24, 2013, as amended by USCG–2014–0688, 79 FR 58276, Sept. 29, 2014]

§ 11.313 Requirements to qualify for an STCW endorsement as chief mate of vessels of 500 GT or more and less than 3,000 GT (management level).

(a) To qualify for an STCW endorsement as chief mate, an applicant must—

(1) Provide evidence of 12 months of service as OICNW on vessels operating in oceans, near-coastal waters, and/or Great Lakes. Service on inland waters, bays, or sounds that are navigable waters of the United States may be substituted for up to 50 percent of the total required service. Experience gained in the engine department on vessels may be creditable for up to 1 month of the service requirements;

(2) Provide evidence of meeting the standard of competence specified in Section A–II/2 of the STCW Code (incorporated by reference, see § 11.102 of this part); and

(3) Provide evidence of having satisfactorily completed approved training in the following subject areas:

(i) Advanced shiphandling.

(ii) Advanced stability.

(iii) Advanced meteorology.

(iv) Leadership and managerial skills.

(v) Search and rescue.

(vi) Management of medical care.

(vii) ECDIS, if serving on a vessel with this equipment.

(viii) ARPA, if serving on a vessel with this equipment.

(ix) GMDSS, if serving on a vessel with this equipment.

(b) For a renewal of an STCW endorsement as chief mate of vessels of 500 GT or more and less than 3,000 GT to be valid on or after January 1, 2017, each candidate must provide evidence of successful completion of approved training in the following:

(1) Leadership and managerial skills.

(2) ECDIS, if serving on a vessel with this equipment.

(c) The Coast Guard may exempt an applicant from meeting any individual knowledge, understanding, and proficiency required in Section A–II/2 of the STCW Code. These exemptions must be approved by the Coast Guard based upon vessel type. Under these

circumstances, the credential may include a corresponding limitation.

(d) Seafarers with one of the following national officer endorsements are eligible to apply for this endorsement upon completion of the requirements in the following table:

TABLE 1 TO § 11.313(d)—STCW ENDORSEMENT AS CHIEF MATE OF VESSELS OF 500 GT OR MORE AND LESS THAN 3,000 GT

Entry path from national endorsements	Sea service under authority of the endorsement [1]	Competence—STCW Table A–II/2 [2]	Training required by this section [3]
Chief mate OSV	None	Yes	Yes.
Master oceans or near-coastal, less than 500 GRT	6 months	Yes	Yes.
Master towing vessel oceans or near-coastal	6 months	Yes	Yes.

[1] This column provides the minimum additional service required of the seafarer in order to meet the requirements of this section.
[2] Complete any items in paragraph (a)(2) of this section not previously satisfied.
[3] Complete any items in paragraph (a)(3) of this section not previously satisfied.

[USCG–2004–17914, 78 FR 77909, Dec. 24, 2013, as amended by USCG–2014–0688, 79 FR 58276, Sept. 29, 2014]

§ 11.315 Requirements to qualify for an STCW endorsement as master of vessels of less than 500 GT (management level).

(a) To qualify for an STCW endorsement as master, an applicant must—

(1) Provide evidence of 36 months of seagoing service as OICNW on vessels operating in oceans, near-coastal waters, and/or Great Lakes; however, this period may be reduced to not less than 24 months if not less than 12 months of such seagoing service has been served as chief mate. Service on inland waters, bays, or sounds that are navigable waters of the United States may be substituted for up to 50 percent of the total required service. Experience gained in the engine department may be creditable for up to 3 months of the service requirements;

(2) Provide evidence of meeting the standard of competence specified in Section A–II/2 of the STCW Code (incorporated by reference, see § 11.102 of this part); and

(3) Provide evidence of having satisfactorily completed approved training in the following subject areas:

(i) Search and rescue.

(ii) Management of medical care.

(iii) Leadership and managerial skills.

(iv) ECDIS, if serving on a vessel with this equipment.

(v) ARPA, if serving on a vessel with this equipment.

(vi) GMDSS, if serving on a vessel with this equipment.

(b) For a renewal of an STCW endorsement as master of vessels of less than 500 GT to be valid on or after January 1, 2017, each candidate must provide evidence of successful completion of approved training in the following:

(1) Leadership and managerial skills.

(2) ECDIS, if serving on a vessel with this equipment.

(c) The Coast Guard may exempt an applicant from meeting any individual knowledge, understanding, and proficiency required in Section A–II/3 of the STCW Code. These exemptions must be approved by the Coast Guard based upon vessel type. Under these circumstances, the credential may include a corresponding limitation.

(d) Seafarers with one of the following national officer endorsements are eligible to apply for this endorsement upon completion of the requirements in the following table:

TABLE 1 TO § 11.315(d)—STCW ENDORSEMENT AS MASTER OF VESSELS OF LESS THAN 500 GT

Entry path from national endorsements	Sea service under authority of the endorsement [1]	Competence—STCW Table A–II/3 [2]	Training required by this section [3]
Master oceans or near-coastal, less than 500 GRT	None	Yes	Yes.
Master towing vessel oceans or near-coastal	None	Yes	Yes.

TABLE 1 TO § 11.315(d)—STCW ENDORSEMENT AS MASTER OF VESSELS OF LESS THAN 500 GT—Continued

Entry path from national endorsements	Sea service under authority of the endorsement [1]	Competence—STCW Table A–II/3 [2]	Training required by this section [3]
Master oceans or near-coastal, less than 200 GRT	12 months	Yes	Yes.

[1] This column provides the minimum additional service required of the seafarer in order to meet the requirements of this section.
[2] Complete any items in paragraph (a)(2) of this section not previously satisfied.
[3] Complete any items in paragraph (a)(3) of this section not previously satisfied.

§ 11.317 Requirements to qualify for an STCW endorsement as master of vessels of less than 500 GT limited to near-coastal waters (management level).

(a) To qualify for an STCW endorsement as master, an applicant must—

(1) Provide evidence of 12 months of service as OICNW, on vessels operating in oceans, near-coastal waters, and/or Great Lakes. Service on inland waters, bays, or sounds that are navigable waters of the United States may be substituted for up to 50 percent of the total required service. Experience gained in the engine department on vessels may be creditable for up to 1 month of the service requirements;

(2) Provide evidence of meeting the standard of competence specified in Section A–II/3 of the STCW Code (incorporated by reference, see § 11.102 of this part); and

(3) Provide evidence of having satisfactorily completed approved training in the following subject areas:

(i) Medical first-aid provider.

(ii) Basic and advanced firefighting in accordance with § 11.303 of this subpart.

(iii) Proficiency in survival craft and rescue boats other than fast rescue boats (PSC) or proficiency in survival craft and rescue boats other than lifeboats and fast rescue boats (PSC-limited).

(iv) Leadership and managerial skills.

(v) ECDIS, if serving on a vessel with this equipment.

(vi) Radar observer, if serving on a vessel with this equipment.

(vii) ARPA, if serving on a vessel with this equipment.

(b) For a renewal of an STCW endorsement as master of vessels of less than 500 GT limited to near-coastal waters to be valid on or after January 1, 2017, each candidate must provide evidence of successful completion of approved training in the following:

(1) Leadership and managerial skills.

(2) ECDIS, if serving on a vessel with this equipment.

(c) The Coast Guard may exempt an applicant from meeting any individual knowledge, understanding, and proficiency required in Section A–II/3 of the STCW Code. These exemptions must be approved by the Coast Guard based upon vessel type. Under these circumstances, the credential may include a corresponding limitation.

(d) Seafarers with one of the following national officer endorsements are eligible to apply for this endorsement upon completion of the requirements in the following table:

TABLE 1 TO § 11.317(d)—STCW ENDORSEMENT AS MASTER OF VESSELS OF LESS THAN 500 GT LIMITED TO NEAR-COASTAL WATERS

Entry path from national endorsements	Sea service under authority of the endorsement [1]	Competence—STCW Table A–II/3 [2]	Training required by this section [3]
Mate oceans or near-coastal, less than 500 GRT	None	Yes	Yes.
Mate towing vessel oceans or near-coastal	None	Yes	Yes.
Master oceans or near-coastal, less than 200 GRT	6 months	Yes	Yes.
Mate oceans or near-coastal, less than 200 GRT	12 months	Yes	Yes.

[1] This column provides the minimum additional service required of the seafarer in order to meet the requirements of this section.
[2] Complete any items in paragraph (a)(2) of this section not previously satisfied.
[3] Complete any items in paragraph (a)(3) of this section not previously satisfied.

[USCG–2004–17914, 78 FR 77909, Dec. 24, 2013, as amended by USCG–2014–0688, 79 FR 58276, Sept. 29, 2014]

§ 11.319 Requirements to qualify for an STCW endorsement as Officer in Charge of a Navigational Watch (OICNW) of vessels of less than 500 GT (operational level).

(a) To qualify for an STCW endorsement as OICNW, an applicant must—

(1) Provide evidence of seagoing service as follows:

(i) Provide evidence of 36 months of service in the deck department on vessels operating in oceans, near-coastal waters, and/or Great Lakes. Service on inland waters, bays, or sounds that are navigable waters of the United States may be substituted for up to 50 percent of the required service. Experience gained in the engine department may be creditable for up to 3 months of the service requirements; or

(ii) Provide evidence of not less than 12 months of seagoing service as part of an approved training program that includes onboard training that meets the requirements of Section A–II/1 of the STCW Code (incorporated by reference, see § 11.102 of this part).

(2) Provide evidence of having performed during the required seagoing service, bridge watchkeeping duties, under the supervision of an officer holding the STCW endorsement as master, chief mate, or OICNW, for a period of not less than 6 months. The Coast Guard will accept service on vessels as boatswain, able seaman, or quartermaster while holding the appropriate deck watchkeeping rating endorsement, which may be accepted on a two-for-one basis to a maximum allowable substitution of 3 months (6 months of experience equals 3 months of creditable service);

(3) Provide evidence of meeting the standard of competence specified in Section A–II/1 of the STCW Code; and

(4) Provide evidence of having satisfactorily completed approved training in the following subject areas:

(i) Medical first-aid provider.

(ii) Radar observer, if serving on a vessel with this equipment.

(iii) Watchkeeping, including COLREGS and IMO standard marine communication phrases (SMCP).

(iv) Basic and advanced firefighting in accordance with § 11.303 of this subpart.

(v) Proficiency in survival craft and rescue boats other than fast rescue boats (PSC) or proficiency in survival craft and rescue boats other than lifeboats and fast rescue boats (PSC-limited).

(vi) Visual signaling.

(vii) Bridge resource management;

(viii) ARPA, if serving on a vessel with this equipment.

(ix) GMDSS, if serving on a vessel with this equipment.

(x) ECDIS, if serving on a vessel with this equipment.

(b) For a renewal of an STCW endorsement as OICNW of vessels of less than 500 GT to be valid on or after January 1, 2017, each candidate must provide the following:

(1) Evidence of meeting the standard of competence in leadership and teamworking skills.

(2) Completion of approved training in ECDIS, if serving on a vessel with this equipment.

(c) The Coast Guard may exempt an applicant from meeting any individual knowledge, understanding, and proficiency required in Section A–II/3 of the STCW Code. These exemptions must be approved by the Coast Guard based upon vessel type. Under these circumstances, the credential may include a corresponding limitation.

(d) Seafarers with one of the following national officer endorsements are eligible to apply for this endorsement upon completion of the requirements in the following table:

TABLE 1 TO § 11.319(d)—STCW ENDORSEMENT AS OFFICER IN CHARGE OF A NAVIGATIONAL WATCH (OICNW) OF VESSELS OF LESS THAN 500 GT.

Entry path from national endorsements	Sea service under authority of the endorsement [1]	Competence—STCW Table A–II/3 [2]	Training required by this section [3]
Mate oceans or near-coastal, less than 500 GRT	None	Yes	Yes.
Mate towing vessel oceans or near-coastal	None	Yes	Yes.
Master oceans or near-coastal, less than 200 GRT	6 months	Yes	Yes.
Mate oceans or near-coastal, less than 200 GRT	12 months	Yes	Yes.

[1] This column provides the minimum additional service required of the seafarer in order to meet the requirements of this section.
[2] Complete any items in paragraph (a)(2) of this section not previously satisfied.
[3] Complete any items in paragraph (a)(3) of this section not previously satisfied.

[USCG–2004–17914, 78 FR 77909, Dec. 24, 2013, as amended by USCG–2014–0688, 79 FR 58276, Sept. 29, 2014]

§ 11.321 Requirements to qualify for an STCW endorsement as officer in charge of a navigational watch (OICNW) of vessels of less than 500 GT limited to near-coastal waters (operational level).

(a) To qualify for an STCW endorsement as OICNW, an applicant must—

(1) Provide evidence of seagoing service as follows:

(i) Twenty-four months of seagoing service in the deck department on vessels operating in oceans, near-coastal waters, and/or Great Lakes. Service on inland waters, bays, or sounds that are navigable waters of the United States may be substituted for up to 50 percent of the total required service. Experience gained in the engine department may be creditable for up to 3 months of the service requirements; or

(ii) Successful completion of an approved training program that includes seagoing service as required by the Coast Guard; or

(iii) Successful completion of approved training for this section and obtain 12 months of seagoing service;

(2) Provide evidence of meeting the standard of competence specified in Section A–II/3 of the STCW Code (incorporated by reference, see § 11.102 of this part); and

(3) Provide evidence of having satisfactorily completed approved training in the following subject areas:

(i) Medical first-aid provider.

(ii) Basic and advanced firefighting in accordance with § 11.303 of this subpart.

(iii) Proficiency in survival craft and rescue boats other than fast rescue boats (PSC) or proficiency in survival craft and rescue boats other than lifeboats and fast rescue boats (PSC-limited).

(iv) Bridge resource management;

(v) ECDIS, if serving on a vessel with this equipment.

(vi) Radar observer, if serving on a vessel with this equipment.

(vii) ARPA, if serving on a vessel with this equipment.

(b) For a renewal of an STCW endorsement as OICNW of vessels of less than 500 GT limited to near-coastal waters to be valid on or after January 1, 2017, each candidate must provide the following:

(1) Evidence of meeting the standard of competence in leadership and teamworking skills.

(2) Completion of approved training in ECDIS, if serving on a vessel with this equipment.

(c) The Coast Guard may exempt an applicant from meeting any individual knowledge, understanding, and proficiency required in Section A–II/3 of the STCW Code. These exemptions must be approved by the Coast Guard based upon vessel type. Under these circumstances, the credential may include a corresponding limitation.

(d) Seafarers with one of the following national officer endorsements are eligible to apply for this endorsement upon completion of the requirements in the following table:

TABLE 1 TO § 11.321(d)—STCW ENDORSEMENT AS OICNW OF VESSELS OF LESS THAN 500 GT LIMITED TO NEAR-COASTAL WATERS

Entry path from national endorsements	Sea service under authority of the endorsement [1]	Competence—STCW Table A–II/3 [2]	Training required by this section [3]
Mate oceans or near-coastal less than 500 GRT	None	Yes	Yes.
Mate towing vessel oceans or near-coastal	None	Yes	Yes.
Master oceans or near-coastal, less than 200 GRT	None	Yes	Yes.
Mate oceans or near-coastal, less than 200 GRT	6 months	Yes	Yes.

[1] This column provides the minimum additional service required of the seafarer in order to meet the requirements of this section.
[2] Complete any items in paragraph (a)(2) of this section not previously satisfied.
[3] Complete any items in paragraph (a)(3) of this section not previously satisfied.

[USCG–2004–17914, 78 FR 77909, Dec. 24, 2013, as amended by USCG–2014–0688, 79 FR 58276, Sept. 29, 2014]

§ 11.323 STCW engineer officer endorsements.

(a) Specific requirements for all STCW engineer officer endorsements are detailed in the applicable sections in this part.

(1) Chief engineer officer on vessels powered by main propulsion machinery of 3,000 kW/4,000 HP propulsion power or more (management level).

(2) Second engineer officer on vessels powered by main propulsion machinery of 3,000 kW/4,000 HP propulsion power or more (management level).

(3) Officer in charge of an engineering watch (OICEW) in a manned engineroom, or as a designated duty engineer in a periodically unmanned engineroom, on vessels powered by main propulsion machinery of 750 kW/1,000 HP propulsion power or more (operational level).

(4) Chief engineer officer on vessels powered by main propulsion machinery of between 750 kW/1,000 HP and 3,000 kW/4,000 HP propulsion power (management level).

(5) Second engineer officer on vessels powered by main propulsion machinery of 750 kW/1,000 HP to 3,000 kW/4,000 HP propulsion power (management level).

(6) Electro-technical officer on vessels powered by main propulsion machinery of 750 kW/1,000 HP or more (operational level).

(b) *Limitations.* (1) STCW engineer officer endorsements issued in accordance with §§ 11.325, 11.327, 11.329, 11.331, 11.333, and 11.335 of this subpart will be restricted to specific propulsion modes for steam, motor, or gas turbine-propelled vessels as appropriate.

(2) STCW engineer officer endorsements issued in accordance with §§ 11.325, 11.327, 11.329, 11.331, 11.333, and 11.335 of this subpart for motor or gas turbine-propelled vessels may be endorsed as limited to serve on vessels without auxiliary boilers, waste-heat boilers, distilling plants, oily water separators, or sewage treatment plants. An applicant may qualify for removal of any of these limitations by demonstrating the appropriate competencies.

(c) An engineer officer who does not hold an STCW endorsement may serve on seagoing vessels propelled by machinery of less than 750 kW/1,000 HP, the vessels specified in § 15.105(f) and (g) of this subchapter, and vessels operating on the Great Lakes or inland waters of the United States.

(d) An officer endorsement issued in the grade of chief engineer (limited) or assistant engineer (limited) allows the holder to serve within any propulsion power limitations on vessels of unlimited tonnage on inland waters, on vessels of less than 3,000 GT in Great Lakes service, and on the vessels specified in § 15.105(f) and (g) of this subchapter.

§ 11.325 Requirements to qualify for an STCW endorsement as chief engineer officer on vessels powered by main propulsion machinery of 3,000 kW/4,000 HP propulsion power or more (management level).

(a) To qualify for an STCW endorsement as chief engineer officer, an applicant must—

(1) Provide evidence of not less than 36 months of service as OICEW on ships

powered by main propulsion machinery of 750 kW/1,000 HP propulsion power or more. This period may be reduced to not less than 24 months if the applicant has served for not less than 12 months as second engineer officer on ships powered by propulsion machinery of 3,000 kW/4,000 HP or more;

(2) Provide evidence of meeting the standard of competence specified in Section A–III/2 of the STCW Code (incorporated by reference, see § 11.102 of this part); and

(3) Provide evidence of having satisfactorily completed approved training in the following areas:

(i) Engineroom resource management (ERM) if not completed at the operational level.

(ii) Leadership and managerial skills.

(iii) Management of electrical and electronic control equipment.

(b) For a renewal of an STCW endorsement as chief engineer officer on vessels powered by main propulsion machinery of 3,000 kW/4,000 HP propulsion power or more to be valid on or after January 1, 2017, each candidate must provide evidence of successful completion of approved training in the following:

(1) ERM if not completed at the operational level.

(2) Leadership and managerial skills.

(3) Management of electrical and electronic control equipment.

(c) The Coast Guard may exempt an applicant from meeting any individual knowledge, understanding, and proficiency required in Section A–III/2 of the STCW Code. These exemptions must be approved by the Coast Guard based upon vessel type. Under these circumstances, the credential may include a corresponding limitation.

(d) Seafarers with one of the following national officer endorsements are eligible to apply for this endorsement upon completion of the requirements in the following table:

TABLE 1 TO § 11.325(d)—STCW ENDORSEMENT AS CHIEF ENGINEER OFFICER ON VESSELS POWERED BY MAIN PROPULSION MACHINERY OF 3,000KW/4,000HP PROPULSION POWER OR MORE

Entry path from national endorsements	Sea service [1]	Competence—STCW Table A–III/2 [2]	Training required by this section [3]
Chief engineer	None	Yes	Yes.
Chief engineer (limited)	12 months	Yes	Yes.
Chief engineer (MODU)	12 months/24 months [4]	Yes	Yes.
Chief engineer (OSV)	None	Yes	Yes.
Designated duty engineer, any horsepower [5]	24 months as DDE	Yes	Yes.

[1] This column provides the minimum additional service required of the seafarer in order to meet the requirements of this section.
[2] Complete any items in paragraph (a)(2) of this section not previously satisfied.
[3] Complete any items in paragraph (a)(3) of this section not previously satisfied.
[4] Depending on the type of sea service used to obtain chief engineer (MODU) (refer to § 11.542 of this part)
[5] STCW certificate should be limited to vessels less than 500 GRT.

§ 11.327 Requirements to qualify for an STCW endorsement as second engineer officer on vessels powered by main propulsion machinery of 3,000kW/4,000 HP propulsion power or more (management level).

(a) To qualify for an STCW endorsement as second engineer officer, an applicant must—

(1) Provide evidence of not less than 12 months of service as OICEW on vessels powered by main propulsion machinery of 750kW/1,000 HP or more; or 12 months of sea service as a chief engineer on vessels powered by propulsion machinery of vessels between 750kW/1,000 HP and 3,000 kW/4,000 HP;

(2) Provide evidence of meeting the standard of competence specified in Section A–III/2 of the STCW Code (incorporated by reference, see § 11.102 of this part); and

(3) Provide evidence of having satisfactorily completed approved training in the following areas:

(i) Engineroom resource management (ERM) if not completed at the operational level.

(ii) Leadership and managerial skills.

(iii) Management of electrical and electronic control equipment.

(b) For a renewal of an STCW endorsement as second engineer officer on vessels powered by main propulsion

machinery of 3,000 kW/4,000 HP propulsion power or more to be valid on or after January 1, 2017, each candidate must provide evidence of successful completion of approved training in the following:

(1) ERM if not completed at the operational level.

(2) Leadership and managerial skills.

(3) Management of electrical and electronic control equipment.

(c) The Coast Guard may exempt an applicant from meeting any individual knowledge, understanding, and proficiency required in Section A–III/2 of the STCW Code. These exemptions must be approved by the Coast Guard based upon vessel type. Under these circumstances, the credential may include a corresponding limitation.

(d) Seafarers with one of the following national officer endorsements are eligible to apply for this endorsement upon completion of the requirements in the following table:

TABLE 1 TO § 11.327(d)—STCW ENDORSEMENT AS SECOND ENGINEER OFFICER ON VESSELS POWERED BY MAIN PROPULSION MACHINERY OF 3,000 kW/4,000 HP PROPULSION POWER OR MORE

Entry path from national endorsements	Sea service [1]	Competence—STCW Table A–III/2 [2]	Training required by this section [3]
First assistant engineer	None	Yes	Yes.
Second assistant engineer	None	Yes	Yes.
Third assistant engineer	12 months	Yes	Yes.
Assistant engineer (limited)	12 months	Yes	Yes.
Chief engineer MODU	12 months	Yes	Yes.
Chief engineer OSV	None	Yes	Yes.
Designated duty engineer, unlimited [4]	12 months as DDE	Yes	Yes.

[1] This column provides the minimum additional service required of the seafarer in order to meet the requirements of this section.
[2] Complete any items in paragraph (a)(2) of this section not previously satisfied.
[3] Complete any items in paragraph (a)(3) of this section not previously satisfied.
[4] STCW certificate should be limited to vessels less than 500 GRT.

§ 11.329 Requirements to qualify for an STCW endorsement as Officer in Charge of an Engineering Watch (OICEW) in a manned engineroom or designated duty engineer in a periodically unmanned engineroom on vessels powered by main propulsion machinery of 750 kW/1,000 HP propulsion power or more (operational level).

(a) To qualify for an STCW endorsement as OICEW, an applicant must—

(1) Provide evidence of seagoing service as follows:

(i) Thirty-six months of seagoing service in the engine department; or

(ii) Successful completion of an approved training program, which includes a combination of workshop skill training and seagoing service of not less than 12 months, and that meets the requirements of Section A–III/1 of the STCW Code (incorporated by reference, see § 11.102 of this part);

(2) Provide evidence of having performed during the required seagoing service, engine room watchkeeping duties, under the supervision of an officer holding the STCW endorsement as chief engineer officer or as a qualified engineer officer, for a period of not less than 6 months;

(3) Provide evidence of meeting the standard of competence specified in Section A–III/1 of the STCW Code; and

(4) Provide evidence of having satisfactorily completed approved training in the following subject areas:

(i) Medical first-aid provider.

(ii) Basic and advanced firefighting in accordance with § 11.303 of this subpart.

(iii) Proficiency in survival craft and rescue boats other than fast rescue boats.

(iv) Engineroom resource management (ERM).

(v) Engineering terminology and shipboard operations.

(vi) Auxiliary machinery.

(vii) Gas turbine plants, as applicable.

(viii) Steam plants, as applicable.

(ix) Motor plants, as applicable.

(x) Electrical machinery and basic electronics.

(xi) Control systems.

(b) Experience gained in the deck department may be creditable for up to 3 months of the service requirements in paragraph (a)(1)(i) of this section.

(c) For a renewal of an STCW endorsement as OICEW to be valid on or after January 1, 2017, each candidate must provide evidence of having satisfactorily completed ERM training and meeting the standard competence in leadership and teamworking skills if not previously completed.

(d) The Coast Guard may exempt an applicant from meeting any individual knowledge, understanding, and proficiency required in Section A–III/1 of the STCW Code. These exemptions must be approved by the Coast Guard based upon vessel type. Under these circumstances, the credential may include a corresponding limitation.

(e) Seafarers with one of the following national officer endorsements are eligible to apply for this endorsement upon completion of the requirements in the following table:

TABLE 1 TO § 11.327(d)—STCW ENDORSEMENT AS SECOND ENGINEER OFFICER ON VESSELS POWERED BY MAIN PROPULSION MACHINERY OF 3,000 kW/4,000 HP PROPULSION POWER OR MORE

Entry path from national endorsements	Sea service [1]	Competence—STCW Table A–III/2 [2]	Training required by this section [3]
First assistant engineer	None	Yes	Yes.
Second assistant engineer	None	Yes	Yes.
Third assistant engineer	12 months	Yes	Yes.
Assistant engineer (limited)	12 months	Yes	Yes.
Chief engineer MODU	12 months	Yes	Yes.
Chief engineer OSV	None	Yes	Yes.
Designated duty engineer, unlimited [4]	12 months as DDE	Yes	Yes.

[1] This column provides the minimum additional service required of the seafarer in order to meet the requirements of this section.
[2] Complete any items in paragraph (a)(2) of this section not previously satisfied.
[3] Complete any items in paragraph (a)(3) of this section not previously satisfied.
[4] STCW certificate should be limited to vessels less than 500 GRT.

TABLE 1 TO § 11.329(e)—STCW ENDORSEMENT AS OICEW IN A MANNED ENGINE ROOM OR DESIGNATED DUTY ENGINEER IN A PERIODICALLY UNMANNED ENGINE ROOM ON VESSELS POWERED BY MAIN PROPULSION MACHINERY OF 750 kW/1,000 HP PROPULSION POWER OR MORE

[Operational level]

Entry path from national endorsements	Sea service *	Competence—STCW Table A–III/1 **	Training required by this section ***
Second assistant engineer any horsepower	None	Yes	Yes
Third assistant engineer any horsepower	None	Yes	Yes
Assistant engineer (limited)	None	Yes	Yes
Designated duty engineer, (unlimited) (less than 500 GRT)	None	Yes	Yes
Assistant engineer (MODU)	None	Yes	Yes
Assistant engineer (OSV)	None	Yes	Yes
Designated duty engineer, 3,000 kW/4,000 HP [1]	12 months	Yes	Yes
Designated duty engineer, 750 kW/1,000 HP [1]	24 months	Yes	Yes

* This column provides the minimum additional service required of the seafarer in order to meet the requirements of this section.
** Complete any items in paragraph (a)(3) of this section not previously satisfied.
*** Complete any items in paragraph (a)(4) of this section not previously satisfied.
[1] STCW certificate should be limited to vessels less than 500 GRT.

[USCG–2004–17914, 78 FR 77909, Dec. 24, 2013, as amended by USCG–2014–0688, 79 FR 58276, Sept. 29, 2014]

EDITORIAL NOTE: At 79 FR 58276, Sept. 29, 2014, § 11.329 was amended; however, a portion of the amendment could not be incorporated due to inaccurate amendatory instruction.

§ 11.331 Requirements to qualify for an STCW endorsement as chief engineer officer on vessels powered by main propulsion machinery of 750 kW/1,000 HP or more and less than 3,000 kW/4,000 HP propulsion power (management level).

(a) To qualify for an STCW endorsement as chief engineer officer, an applicant must—

(1) Provide evidence of meeting the requirements for certification as OICEW, and have not less than 24 months of service on seagoing vessels powered by main propulsion machinery of not less than 750 kW/1,000 HP, of which not less than 12 months must be served while qualified to serve as second engineer officer. Experience gained in the deck department may be creditable for up to 2 months of the total service requirements;

(2) Provide evidence of meeting the standard of competence specified in Section A–III/3 of the STCW Code (incorporated by reference, see § 11.102 of this part); and

(3) Provide evidence of having satisfactorily completed approved training in the following areas:

(i) Engineroom resource management (ERM) if not completed at the operational level.

(ii) Leadership and managerial skills.

(iii) Management of electrical and electronic control equipment.

(b) For a renewal of an STCW endorsement as chief engineer officer on vessels powered by main propulsion machinery of 750 kW/1,000 HP or more and less than 3,000 kW/4,000 HP propulsion power to be valid on or after January 1, 2017, each candidate must provide evidence of successful completion of approved training in the following:

(1) ERM if not completed at the operational level.

(2) Leadership and managerial skills.

(3) Management of electrical and electronic control equipment.

(c) An engineer officer qualified to serve as second engineer officer on vessels powered by main propulsion machinery of 3,000 kW/4,000 HP or more, may serve as chief engineer officer on vessels powered by main propulsion machinery of 750 kW/1,000 HP or more and less than 3,000 kW/4,000 HP provided the certificate is so endorsed.

(d) The Coast Guard may exempt an applicant from meeting any individual knowledge, understanding, and proficiency required in Section A–III/3 of the STCW Code. These exemptions must be approved by the Coast Guard based upon vessel type. Under these circumstances, the credential may include a corresponding limitation.

(e) Seafarers with one of the following national officer endorsements are eligible to apply for this endorsement upon completion of the requirements in the following table:

TABLE 1 TO § 11.331(e)—STCW ENDORSEMENT AS CHIEF ENGINEER OFFICER ON VESSELS POWERED BY MAIN PROPULSION MACHINERY OF 750 kW/1,000 HP OR MORE AND LESS THAN 3,000 kW/4,000 HP PROPULSION POWER

Entry path from national endorsements	Sea service [1]	Competence—STCW Table A–III/2 [2]	Training required by this section [3]
Chief engineer	None	Yes	Yes.
First assistant engineer	None	Yes	Yes.
Chief engineer (limited)	None	Yes	Yes.
Chief engineer OSV	None	Yes	Yes.
Chief engineer MODU	12 months	Yes	Yes.
Designated duty engineer, 3,000 kW/4,000 HP [4]	12 months	Yes	Yes.
Designated duty engineer, 750 kW/1,000 HP [4]	24 months	Yes	Yes.

[1] This column provides the minimum additional service required of the seafarer in order to meet the requirements of this section.
[2] Complete any items in paragraph (a)(2) of this section not previously satisfied.
[3] Complete any items in paragraph (a)(3) of this section not previously satisfied.
[4] STCW certificate should be limited to vessels less than 500 GRT.

[USCG–2004–17914, 78 FR 77909, Dec. 24, 2013, as amended by USCG–2014–0688, 79 FR 58277, Sept. 29, 2014]

§ 11.333 Requirements to qualify for an STCW endorsement as second engineer officer on vessels powered by main propulsion machinery of 750kW/1,000 HP or more and less than 3,000 kW/4,000 HP propulsion power (management level).

(a) To qualify for an STCW endorsement as second engineer officer, an applicant must—

(1) Provide evidence of meeting the requirements for certification as OICEW, as well as serving for not less than 12 months as assistant engineer officer or engineer officer on vessels powered by main propulsion machinery of not less than 750 kW/1,000 HP. Experience gained in the deck department may be creditable for up to 1 month of the total service requirements;

(2) Provide evidence of meeting the standard of competence specified in Section A–III/3 of the STCW Code (incorporated by reference, see § 11.102 of this part); and

(3) Provide evidence of having satisfactorily completed approved training in the following areas:

(i) Engineroom resource management (ERM) if not completed at the operational level.

(ii) Leadership and managerial skills.

(iii) Management of electrical and electronic control equipment.

(b) For a renewal of an STCW endorsement as second engineer officer on vessels powered by main propulsion machinery of 750 kW/1,000 HP or more and less than 3,000 kW/4,000 HP propulsion power to be valid on or after January 1, 2017, each candidate must provide evidence of successful completion of approved training in the following:

(1) ERM if not completed at the operational level.

(2) Leadership and managerial skills.

(3) Management of electrical and electronic control equipment.

(c) The Coast Guard may exempt an applicant from meeting any individual knowledge, understanding, and proficiency required in Section A–III/3 of the STCW Code. These exemptions must be approved by the Coast Guard based upon vessel type. Under these circumstances, the credential may include a corresponding limitation.

(d) Seafarers with one of the following national officer endorsements are eligible to apply for this endorsement upon completion of the requirements in the following table:

TABLE 1 TO § 11.333(d)—STCW ENDORSEMENT AS SECOND ENGINEER OFFICER ON VESSELS POWERED BY MAIN PROPULSION MACHINERY OF 750 KW/1,000 HP OR MORE AND LESS THAN 3,000 KW/4,000 HP PROPULSION POWER

Entry path from national endorsements	Sea service [1]	Competence—STCW Table A–III/2 [2]	Training required by this section [3]
First assistant engineer	None	Yes	Yes.
Second assistant engineer	None	Yes	Yes.
Third assistant engineer	12 months	Yes	Yes.
Assistant engineer (limited)	None	Yes	Yes.
Assistant engineer OSV	None	Yes	Yes.
Assistant engineer MODU	12 months	Yes	Yes.

[1] This column provides the minimum additional service required of the seafarer in order to meet the requirements of this section.
[2] Complete any items in paragraph (a)(2) of this section not previously satisfied.
[3] Complete any items in paragraph (a)(3) of this section not previously satisfied.

§ 11.335 Requirements to qualify for an STCW endorsement as an electro-technical officer on vessels powered by main propulsion machinery of 750 kW/1,000 HP or more (operational level).

(a) To qualify for an STCW endorsement as an electro-technical officer (ETO), an applicant must—

(1) Provide evidence of 36 months combined workshop skills training and approved seagoing service of which not less than 30 months must be seagoing service in the engine department of vessels. Experience gained in the deck department may be creditable for up to 3 months of the service requirements; or completion of an approved training program, that includes a combination of workshop skill training and seagoing service of not less than 12 months, and

which meets the requirements of Section A–III/6 of the STCW Code (incorporated by reference, see § 11.102 of this part);

(2) Provide evidence of meeting the standard of competence specified in Section A–III/6 of the STCW Code;

(3) Provide evidence of having satisfactorily completed approved training in the following subject areas:

(i) Medical first-aid provider.

(ii) Basic and advanced firefighting in accordance with § 11.303 of this subpart.

(iii) Proficiency in survival craft and rescue boats other than fast rescue boats (PSC) or proficiency in survival craft and rescue boats other than lifeboats and fast rescue boats (PSC-limited); and

(4) Provide evidence of having satisfactorily completed approved professional training in the following subject areas:

(i) Onboard computer networking and security.

(ii) Radio electronics.

(iii) Integrated navigation equipment.

(iv) Ship propulsion and auxiliary machinery.

(v) Instrumentation and control systems.

(vi) High-voltage power systems.

(b) Any applicant who has served in a relevant capacity onboard a vessel for a period of not less than 12 months within the last 60 months must provide evidence of—

(1) Seagoing service; and

(2) Having achieved the standards of competence specified in Section A–III/6 of the STCW Code.

(c) An applicant who holds an STCW endorsement as OICEW, second engineer officer, or chief engineer officer will be allowed to receive the ETO endorsement upon completion of the requirements in Section A–III/6 of the STCW Code.

(d) An applicant who does not hold any other national or STCW endorsement will be issued, upon completion of the requirements in this section, the ETO endorsement without any corresponding national endorsement.

[USCG–2004–17914, 78 FR 77909, Dec. 24, 2013, as amended by USCG–2014–0688, 79 FR 58277, Sept. 29, 2014]

§ 11.337 Requirements to qualify for an STCW endorsement as vessel security officer.

(a) The applicant for an endorsement as vessel security officer must present satisfactory documentary evidence in accordance with the requirements in 33 CFR 104.215.

(b) All applicants for an endorsement must meet the physical examination requirements in 46 CFR part 10, subpart C.

(c) All applicants for this endorsement must meet the safety and suitability requirements and the National Driver Registry review requirements in § 10.209(e) of this subchapter, unless they have met these requirements within the previous 5 years in connection with another endorsement.

Subpart D—Professional Requirements for National Deck Officer Endorsements

§ 11.401 Ocean and near-coastal national officer endorsements.

(a) Subject to the provisions of §§ 11.464(e) and 11.465(b) of this subpart, any license or MMC endorsement for service as master or mate on ocean waters qualifies the mariner to serve in the same grade on any waters, except towing vessels upon western rivers subject to the limitations of the endorsement.

(b) Subject to the provisions of §§ 11.464(e) and 11.465(b) of this subpart, any license or MMC endorsement issued for service as master or mate on near-coastal waters qualifies the mariner to serve in the same grade on Great Lakes and inland waters, except towing vessels upon western rivers subject to the limitations of the endorsement.

(c) Near-coastal endorsements for unlimited tonnage require the same number of years of service as the ocean-unlimited endorsements. The primary differences in these endorsements are the nature of the service and the scope of the required training, examination, and assessment.

(d) A master or mate on vessels of 200 GRT or more, and a master or mate on vessels under 200 GRT, may be endorsed for sail or auxiliary sail as appropriate. The applicant must present

the equivalent total service required for conventional officer endorsements, including at least 1 year of deck experience on that specific type of vessel. For example, for an officer endorsement as master of vessels of less than 1,600 GRT endorsed for auxiliary sail, the applicant must meet the total experience requirements for the conventional officer endorsement, including time as mate, and the proper tonnage experience, including at least 1 year of deck service, on appropriately sized auxiliary sail vessels. For an endorsement to serve on vessels of less than 200 GRT, see the individual endorsement requirements.

(e) Service toward an oceans, near-coastal or STCW endorsement will be credited as follows:

(1) Service on the Great Lakes will be credited on a day-for-day basis.

(2) Service on inland waters, other than Great Lakes, that are navigable waters of the United States, may be substituted for up to 50 percent of the total required service.

(3) Service on vessels to which STCW applies, whether inland or coastwise, will be credited on a day-for-day basis.

§ 11.402 Tonnage requirements for national ocean or near-coastal endorsements for vessels of 1,600 GRT or more.

(a) To qualify for a national ocean or near-coastal endorsement for service on vessels of unlimited tonnage—

(1) All the required experience must be obtained on vessels of 100 GRT or more; and

(2) At least one-half of the required experience must be obtained on vessels of 1,600 GRT or more.

(b) If an applicant for a national endorsement as master or mate of unlimited tonnage does not have the service on vessels of 1,600 GRT or more as required by paragraph (a)(2) of this section, a tonnage limitation will be placed on the MMC based on the applicant's qualifying experience. The endorsement will be limited to the maximum tonnage on which at least 25 percent of the required experience was obtained, or 150 percent of the maximum tonnage on which at least 50 percent of the service was obtained, whichever is higher. However, the minimum tonnage limitation calculated according to this paragraph will be 2,000 GRT. Limitations are in multiples of 1,000 GRT using the next higher figure when an intermediate tonnage is calculated. When the calculated limitation equals or exceeds 10,000 GRT, the applicant is issued an unlimited tonnage endorsement.

(c) Tonnage limitations imposed under paragraph (b) of this section may be raised or removed in one of the following manners:

(1) When the applicant provides evidence of 6 months of service on vessels of 1,600 GRT or more in the highest grade endorsed, all tonnage limitations will be removed.

(2) When the applicant provides evidence of 6 months of service on vessels of 1,600 GRT or more in any capacity as an officer other than the highest grade for which he or she is endorsed, all tonnage limitations for the grade in which the service is performed will be removed and the next higher grade endorsement will be raised to the tonnage of the vessel on which the majority of the service was performed. The total cumulative service before and after issuance of the limited license or MMC officer endorsement may be considered in removing all tonnage limitations.

(3) When the applicant has 12 months of service as able seaman on vessels of 1,600 GRT or more while holding a license or endorsement as third mate, all tonnage limitations on the third mate's license or MMC officer endorsement will be removed.

(d) No applicant holding any national endorsement as master or mate of vessels of less than 1,600 GRT, less than 500 GRT, or less than 25–200 GRT may use the provisions of paragraph (c) of this section to increase the tonnages of his or her license or endorsement.

§ 11.403 Structure of national deck officer endorsements.

Figure 11.403 illustrates the national deck officer endorsement structure, including crossover points. The section numbers on the diagram refer to the specific requirements applicable.

Figure 11.403: Structure of national deck officer endorsements

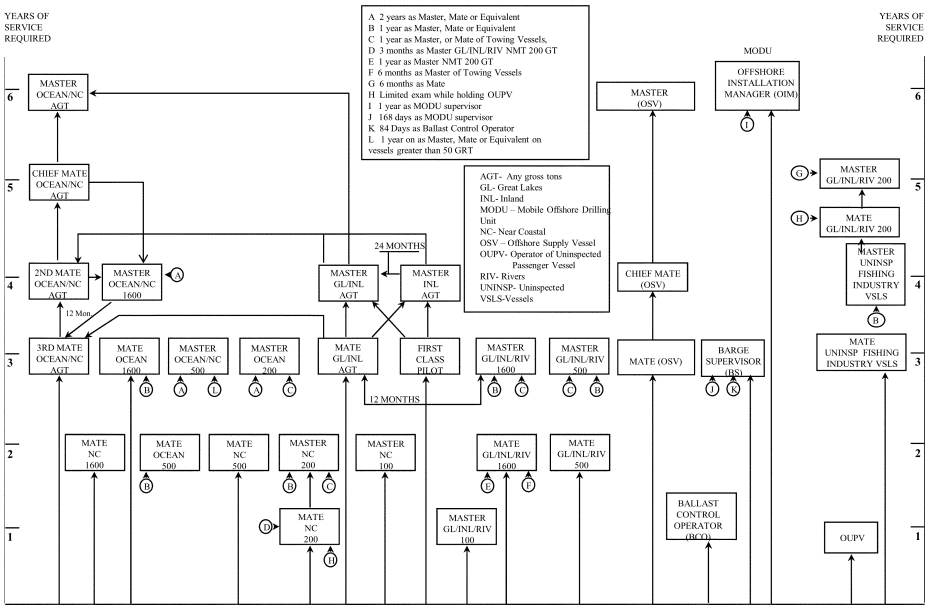

§ 11.404 Service requirements for master of ocean or near-coastal self-propelled vessels of unlimited tonnage.

(a) The minimum service required to qualify an applicant for an endorsement as master of ocean or near-coastal self-propelled vessels of unlimited tonnage is—

(1) One year of service as chief mate on ocean self-propelled vessels; or

(2) While holding a license or MMC endorsement as chief mate of ocean self-propelled vessels of unlimited tonnage, 12 months of service on deck as follows:

(i) A minimum of 6 months of service as chief mate.

(ii) Service as second mate, third mate, or officer in charge of a navigational watch accepted on a two-for-one basis (12 months as officer in charge of a navigational watch equals 6 months of creditable service).

(b) An individual holding an endorsement or license as master of Great Lakes and inland, self-propelled vessels of unlimited tonnage, or master of inland, self-propelled vessels of unlimited tonnage, may obtain an endorsement as master of oceans or near-coastal self-propelled vessels of unlimited tonnage by providing evidence of sea service of not less than 24 months under the authority of the credential and by completing the prescribed examination in subpart I of this part. Service will be credited as follows:

(1) Service on the Great Lakes will be credited on a day-for-day basis up to 100 percent of the total required service.

(2) Service on inland waters, other than Great Lakes, that are navigable waters of the United States, will be credited on a day-for-day basis for up

to 50 percent of the total required service.

(3) Service on vessels to which STCW applies, whether inland or coastwise, will be credited on a day-for-day basis.

(c) A person holding this endorsement may qualify for an STCW endorsement, according to § 11.305 of this part.

§ 11.405 Service requirements for chief mate of ocean or near-coastal self-propelled vessels of unlimited tonnage.

(a) The minimum service required to qualify an applicant for an endorsement as chief mate of ocean or near-coastal self-propelled vessels of unlimited tonnage is 1 year of service as officer in charge of a navigational watch on ocean self-propelled vessels while holding a license or MMC endorsement as second mate.

(b) Service towards an oceans, near-coastal, or STCW endorsement will be credited as follows:

(1) Service on the Great Lakes will be credited on a day-for-day basis.

(2) Service on inland waters, other than Great Lakes, that are navigable waters of the United States, may be substituted for up to 50 percent of the total required service.

(3) Service on vessels to which STCW applies, whether inland or coastwise, will be credited on a day-for-day basis.

(c) A person holding this endorsement may qualify for an STCW endorsement, according to § 11.307 of this part.

§ 11.406 Service requirements for second mate of ocean or near-coastal self-propelled vessels of unlimited tonnage.

(a) The minimum service required to qualify an applicant for an endorsement as second mate of ocean or near-coastal self-propelled vessels of unlimited tonnage is—

(1) One year of service as officer in charge of a navigational watch on ocean self-propelled vessels while holding a license or endorsement as third mate; or

(2) While holding a license or MMC endorsement as third mate of ocean self-propelled vessels of unlimited tonnage, 12 months of service on deck as follows:

(i) A minimum of 6 months service as officer in charge of a deck watch on ocean self-propelled vessels.

(ii) Service on ocean self-propelled vessels as boatswain, able seaman, or quartermaster while holding a certificate or MMC endorsement as able seaman, which may be accepted on a two-for-one basis to a maximum allowable substitution of six months (12 months of experience equals 6 months of creditable service).

(b) Service towards an oceans, near-coastal or STCW endorsement will be credited as follows:

(1) Service on the Great Lakes will be credited on a day-for-day basis up to 100 percent of the total required service.

(2) Service on inland waters, other than Great Lakes, that are navigable waters of the United States, will be credited on a day-for-day basis for up to 50 percent of the total required service.

(3) Service on vessels to which STCW applies, whether inland or coastwise, will be credited on a day-for-day basis.

(c) If an individual holds an endorsement or license as master of Great Lakes and inland self-propelled vessels of unlimited tonnage or master of inland self-propelled vessels of unlimited tonnage, he or she may obtain an endorsement as second mate of ocean or near-coastal self-propelled vessels of unlimited tonnage by completing the prescribed examination in subpart I of this part.

(d) A person holding this endorsement may qualify for an STCW endorsement, according to § 11.309 of this part.

§ 11.407 Service requirements for third mate of ocean or near-coastal self-propelled vessels of unlimited tonnage.

(a) The minimum service or training required to qualify an applicant for an endorsement as third mate of ocean or near-coastal self-propelled vessels of unlimited tonnage is—

(1) Three years of service in the deck department on ocean self-propelled vessels, with a minimum of 6 months of bridge watchkeeping duties under the supervision of the master or a qualified officer. Experience gained in the engine

department on vessels of appropriate tonnage may be creditable for up to 3 months of the service requirements for this officer endorsement;

(2) Graduation from—

(i) The U.S. Merchant Marine Academy (deck curriculum);

(ii) The U.S. Coast Guard Academy with qualification as an underway officer in charge of a navigational watch, underway officer of the deck, or deck watch officer;

(iii) The U.S. Naval Academy with qualification as an underway officer in charge of a navigational watch, underway officer of the deck or deck watch officer; or

(iv) The deck class of a maritime academy approved by and conducted under rules prescribed by the Maritime Administrator and listed in part 310 of this title, including the ocean option program in the deck class of the Great Lakes Maritime Academy; or

(3) Satisfactory completion of a comprehensive apprentice mate training program approved by the Coast Guard.

(b) Graduation from the deck class of the Great Lakes Maritime Academy will qualify the graduate to be examined for an endorsement as third mate self-propelled vessels of unlimited tonnage with a route appropriate to the program completed.

(c) While holding a license or MMC endorsement as master of ocean or near-coastal self-propelled vessels of less than 1,600 GRT, 1 year of service as master on vessels of more than 200 GRT operating on ocean or near-coastal waters will qualify the applicant for an endorsement as third mate of ocean or near-coastal self-propelled vessels of unlimited tonnage.

(d) An individual holding an endorsement or license as mate of Great Lakes and inland, self-propelled vessels of unlimited tonnage, or master of inland, self-propelled vessels of unlimited tonnage, may obtain an endorsement as third mate of oceans or near-coastal self-propelled vessels of unlimited tonnage by completing the prescribed examination in subpart I of this part.

(e) A person holding this endorsement may qualify for an STCW endorsement, according to § 11.309 of this part.

§ 11.410 Requirements for deck officer endorsements for vessels of less than 1,600 GRT.

(a) Endorsements as master and mate of vessels of less than 1,600 GRT are issued in the following tonnage categories:

(1) Less than 1,600 GRT.

(2) Less than 500 GRT.

(3) Between 25 and 200 GRT in 50-ton increments and with appropriate mode of propulsion such as self-propelled, sail, or auxiliary sail.

(b) Experience gained in the engine department on vessels of appropriate tonnage may be creditable for up to 90 days of the service requirements for any master or mate endorsement in this category.

(c) An officer's endorsement in this category obtained with an orally assisted examination will be limited to 500 GRT. In order to raise that tonnage limit to 1,600 GRT, the written examination and service requirements must be satisfied.

§ 11.412 Service requirements for master of ocean or near-coastal self-propelled vessels of less than 1,600 GRT.

(a) The minimum service required to qualify an applicant for an endorsement as master of ocean or near-coastal self-propelled vessels of less than 1,600 GRT is—

(1) Four years total service on ocean or near-coastal waters. Service on Great Lakes and inland waters may substitute for up to 2 years of the required service. Two years of the required service must have been on vessels of more than 100 GRT. Two years of the required service must have been as a master or mate of self-propelled vessels, or master or mate (pilot) of towing vessels, or equivalent position while holding a license or MMC endorsement as master or mate of self-propelled vessels, or master or mate (pilot) of towing vessels. One year of the service as master or mate of self-propelled vessels, or master or mate (pilot) of towing vessels, or equivalent position must have been on vessels of more than 100 GRT; or

(2) One year of service on vessels of more than 100 GRT on ocean or near-coastal waters as a master or mate of

self-propelled vessels, or master or mate of towing vessels while holding a license or MMC endorsement as mate of ocean self-propelled vessels of less than 1,600 GRT or as master or mate of towing vessels.

(b) An applicant holding a license or MMC endorsement as chief mate of ocean or near-coastal self-propelled vessels of 1,600 GRT or more is eligible for this endorsement without further examination. An applicant holding a license or MMC endorsement as second mate of ocean or near-coastal self-propelled vessels of 1,600 GRT or more is eligible for this endorsement upon completion of a limited examination.

(c) A person holding this endorsement may qualify for an STCW endorsement, according to § 11.311 of this part.

§ 11.414 Service requirements for mate of ocean self-propelled vessels of less than 1,600 GRT.

(a) The minimum service required to qualify an applicant for an endorsement as mate of self-propelled vessels of less than 1,600 GRT is—

(1) Three years of total service in the deck department of ocean or near-coastal self-propelled, sail, or auxiliary sail vessels, as follows:

(i) Service on Great Lakes and inland waters may substitute for up to 18 months of the required service.

(ii) One year of the required service must have been on vessels of more than 100 GRT.

(iii) One year of the required service must have been as a master or mate of self-propelled vessels, or master or mate (pilot) of towing vessels, or equivalent position while holding a license or MMC endorsement as master, mate, or master or mate (pilot) of towing vessels. Six months of the required service as master or mate of self propelled vessels, or master or mate (pilot) of towing vessels, or equivalent position must have been on vessels of more than 100 GRT; or

(2) Three years of total service in the deck department on ocean or near-coastal self-propelled, sail, or auxiliary sail vessels of more than 100 GRT. Six months of the required service must have been while performing bridge watchkeeping duties under the supervision of the master or a qualified officer.

(b) A person holding this endorsement may qualify for an STCW endorsement, according to § 11.309 of this part.

§ 11.416 Service requirements for mate of near-coastal self-propelled vessels of less than 1,600 GRT.

(a) The minimum service required to qualify an applicant for an endorsement as mate of near-coastal self-propelled vessels of less than 1,600 GRT is 2 years of total service in the deck department of ocean or near-coastal self-propelled, sail, or auxiliary sail vessels. Service on Great Lakes and inland waters may substitute for up to 1 year of the required service. One year of the required service must have been on vessels of more than 100 GRT. Six months of the required service must have been while performing bridge watchkeeping duties under the supervision of the master or a qualified officer.

(b) A person holding this endorsement may qualify for an STCW endorsement, according to § 11.309 of this part.

§ 11.418 Service requirements for master of ocean or near-coastal self-propelled vessels of less than 500 GRT.

(a) The minimum service required to qualify an applicant for an endorsement as master of ocean or near-coastal self-propelled vessels of less than 500 GRT is—

(1) Three years total of service on ocean or near-coastal waters. Service on Great Lakes and inland waters may substitute for up to 18 months of the required service. Two years of the required service must have been as a master, mate, or equivalent position while holding a license or MMC endorsement as master, mate, or operator of uninspected passenger vessels. One year of the required service as master, mate, or equivalent position must have been on vessels of more than 50 GRT; or

(2) One year of service on vessels of more than 50 GRT on ocean or near-coastal waters as a master or mate of self-propelled vessels, or master or mate of towing vessels while holding a license or MMC endorsement as mate

of ocean self-propelled vessels of less than 500 GRT.

(b) The holder of a license or MMC endorsement as master or mate (pilot) of towing vessels authorizing service on oceans or near-coastal routes is eligible for an endorsement as master of ocean or near-coastal self-propelled vessels of less than 500 GRT after both 1 year of service as master or mate of towing vessels on oceans or near-coastal routes and completion of a limited examination.

(c) A person holding this endorsement may qualify for an STCW endorsement, according to §§ 11.307, 11.309, 11.311, 11.313, and 11.315 of this part.

§ 11.420 Service requirements for mate of ocean self-propelled vessels of less than 500 GRT.

(a) The minimum service required to qualify an applicant for an endorsement as mate of ocean self-propelled vessels of less than 500 GRT is 2 years of total service in the deck department of ocean or near-coastal self-propelled, sail, or auxiliary sail vessels. Service on Great Lakes and inland waters may substitute for up to 1 year of the required service. One year of the required service must have been as a master, mate, or equivalent position while holding a license or endorsement as master, mate, or operator of uninspected passenger vessels. Six months of the required service as master, mate, or equivalent position must have been on vessels of more than 50 GRT.

(b) A person holding this endorsement may qualify for an STCW endorsement, according to §§ 11.309, 11.317, 11.319, and 11.321 of this part.

§ 11.421 Service requirements for mate of near-coastal self-propelled vessels of less than 500 GRT.

(a) The minimum service required to qualify an applicant for an endorsement as mate of near-coastal self-propelled vessels of less than 500 GRT is 2 years of total service in the deck department of ocean or near-coastal self-propelled, sail, or auxiliary sail vessels. Service on Great Lakes and inland waters may substitute for up to 1 year of the required service. One year of the required service must have been on vessels of more than 50 GRT. Three months of the required service must have been while performing bridge watchkeeping duties under the supervision of the master or a qualified officer on vessels of more than 50 GRT.

(b) A person holding this endorsement may qualify for an STCW endorsement, according to §§ 11.309, 11.317, 11.319, and 11.321 of this part.

§ 11.422 Tonnage limitations and qualifying requirements for endorsements as master or mate of vessels of less than 200 GRT.

(a) Each national endorsement as master or mate of vessels of less than 200 GRT is issued with a tonnage limitation based on the applicant's qualifying experience. The tonnage limitation will be issued at the 25, 50, 100, or 200 GRT level. The endorsement will be limited to the maximum GRT on which at least 25 percent of the required experience was obtained, or 150 percent of the maximum GRT on which at least 50 percent of the service was obtained, whichever is higher. Limitations are as stated above, using the next higher figure when an intermediate tonnage is calculated. If more than 75 percent of the qualifying experience is obtained on vessels of 5 GRT or less, the MMC will automatically be limited to vessels of less than 25 GRT.

(b) The tonnage limitation may be raised as follows:

(1) For an endorsement as mate, with at least 45 days of additional service on deck of a vessel in the highest tonnage increment authorized by the officer endorsement.

(2) For an endorsement as master, with at least 90 days of additional service on deck of a vessel in the highest tonnage increment authorized by the master endorsement.

(3) With additional service, which, when combined with all previously accumulated service, will qualify the applicant for a higher tonnage officer endorsement under the basic formula specified in paragraph (a) of this section.

(4) With 6 months additional service in the deck department on vessels within the highest tonnage increment on the officer's license or MMC endorsement. In this case, the tonnage

limitation may be raised one increment.

(c) When the service is obtained on vessels upon which no personnel need an officer endorsement or license, the Coast Guard must be satisfied that the nature of this required service (i.e., size of vessel, route, equipment, etc.) is a reasonable equivalent to the duties performed on vessels which are required to engage individuals with officer endorsements.

(d) Service gained in the engine room on vessels of 200 GRT or less may be creditable for up to 90 days of the deck service requirements for mate.

§ 11.424 Requirements for master of ocean self-propelled vessels of less than 200 GRT.

(a) The minimum service required to qualify an applicant for an officer endorsement as master of ocean self-propelled vessels of less than 200 GRT is—

(1) Three years of total service on ocean or near-coastal waters. Service on Great Lakes and inland waters may substitute for up to 18 months of the required service. Two years of the required service must have been as master, mate, or equivalent position while holding a license or MMC endorsement as master, as mate, or as operator of uninspected passenger vessels; or

(2) Two years of total service as a master or mate of ocean or near-coastal towing vessels. Completion of an examination is also required.

(b) In order to obtain an officer endorsement for sail or auxiliary sail vessels, the applicant must submit evidence of 12 months of service on sail or auxiliary sail vessels. The required 12 months of service may have been obtained prior to issuance of the master's license or MMC endorsement.

(c) A person holding this endorsement may qualify for an STCW endorsement, according to §§ 11.315, 11.317, 11.319, and 11.321 of this part.

§ 11.425 Requirements for mate of ocean self-propelled vessels of less than 200 GRT.

(a) The minimum service required to qualify for the endorsement as mate of ocean self-propelled vessels of less than 200 GRT is—

(1) Twelve months of total service in the deck department of ocean or near-coastal self-propelled, sail, or auxiliary sail vessels. Service on Great Lakes and inland waters may substitute for up to 6 months of the required service; or

(2) Three months of service in the deck department of self-propelled vessels operating on ocean, near-coastal, Great Lakes, or inland waters while holding a license or MMC endorsement as master of inland self-propelled, sail, or auxiliary sail vessels of less than 200 GRT.

(b) The holder of a license or MMC endorsement as operator of uninspected passenger vessels with a near-coastal route endorsement may obtain this endorsement by successfully completing an examination on rules and regulations for small passenger vessels.

(c) To obtain this officer endorsement for sail or auxiliary sail vessels, the applicant must submit evidence of 6 months of deck service on sail or auxiliary sail vessels.

(d) A license or MMC endorsement as master of near-coastal self-propelled vessels may be endorsed as mate of sail or auxiliary sail vessels upon presentation of 3 months of service on sail or auxiliary sail vessels.

(e) To obtain a tonnage endorsement for 100 GRT or more, the applicant must complete the additional examination topics indicated in subpart I of this part.

(f) A person holding this endorsement may qualify for an STCW endorsement, according to §§ 11.319 and 11.321 of this part.

§ 11.426 Requirements for master of near-coastal self-propelled vessels of less than 200 GRT.

(a) The minimum service required to qualify for a master of near-coastal self-propelled vessels of less than 200 GRT is—

(1) Two years total service on ocean or near-coastal waters. Service on Great Lakes and inland waters may substitute for up to 1 year of the required service. One year of the required service must have been as a master, mate, or equivalent position while holding a license or endorsement as

master, mate, or operator of uninspected passenger vessels; or

(2) One year of total service as master or mate of towing vessels on ocean or near-coastal routes. Completion of an examination is also required.

(b) To obtain this officer endorsement for sail or auxiliary sail vessels, the applicant must submit evidence of 12 months of service on sail or auxiliary sail vessels. These 12 months of experience may have been obtained before qualifying for an officer endorsement.

(c) Holders of this endorsement are considered to be in compliance with the STCW Convention (incorporated by reference, see § 11.102) while operating within the limitations of this endorsement.

§ 11.427 Requirements for mate of near-coastal self-propelled vessels of less than 200 GRT.

(a) The minimum service required to qualify for the endorsement as mate of near-coastal self-propelled vessels of less than 200 GRT is—

(1) Twelve months of total service in the deck department of ocean or near-coastal self-propelled, sail, or auxiliary sail vessels. Service on Great Lakes and inland waters may substitute for up to 6 months of the required service; or

(2) Three months of service in the deck department of self-propelled vessels operating on ocean, near-coastal, Great Lakes, or inland waters while holding a license or MMC endorsement as master of inland self-propelled, sail, or auxiliary sail vessels of less than 200 GRT.

(b) The holder of a license or MMC endorsement as operator of uninspected passenger vessels with a near-coastal route endorsement may obtain this endorsement by successfully completing an examination on rules and regulations for small passenger vessels.

(c) To obtain this officer endorsement for sail or auxiliary sail vessels, the applicant must submit evidence of 6 months of deck service on sail or auxiliary sail vessels.

(d) A license or MMC endorsement as master of near-coastal self-propelled vessels may be endorsed as mate of sail or auxiliary sail vessels upon presentation of 3 months of service on sail or auxiliary sail vessels.

(e) To obtain a tonnage endorsement for 100 GRT or more, the applicant must complete the additional examination topics indicated in subpart I of this part.

(f) Holders of this endorsement are considered to be in compliance with the STCW Convention (incorporated by reference, see § 11.102) while operating within the limitations of this endorsement.

§ 11.428 Requirements for master of near-coastal self-propelled vessels of less than 100 GRT.

(a) The minimum service required to qualify for the endorsement as master of self-propelled, seagoing vessels of less than 100 GRT limited to domestic voyages upon near-coastal waters is 2 years of service in the deck department of a self-propelled vessel on ocean or near-coastal waters. Service on Great Lakes and inland waters may substitute for up to 1 year of the required service.

(b) To obtain an endorsement for sail or auxiliary sail vessels, the applicant must submit evidence of 12 months of service on sail or auxiliary-sail vessels. This required service may have been obtained before issuance of the license or MMC.

(c) Holders of this endorsement are considered to be in compliance with the STCW Convention (incorporated by reference, see § 11.102 of this part) while operating within the limitations of this endorsement.

(d) All endorsements issued for master or mate of vessels of less than 100 GRT are issued in tonnage increments based on the applicant's qualifying experience in accordance with the provisions of § 11.422 of this subpart.

§ 11.429 Requirements for a limited master of near-coastal self-propelled vessels of less than 100 GRT.

(a) An endorsement as limited master for service on near-coastal waters on vessels of less than 100 GRT may be issued to an applicant to be employed by organizations such as yacht clubs, marinas, formal camps, and educational institutions. An endorsement

issued under this section is limited to the specific activity and the locality of the yacht club, marina, or camp. To obtain this restricted endorsement, an applicant must—

(1) Have 4 months of service on any waters in the operation of the type of vessel for which the endorsement is requested;

(2) Satisfactorily complete a safe boating course approved by the National Association of State Boating Law Administrators, or a safe boating course conducted by the U.S. Power Squadron or the American Red Cross, or a Coast Guard-approved course. This course must have been completed within 5 years before the date of application; and

(3) Pass a limited examination appropriate for the activity to be conducted and the route authorized.

(b) The first aid and cardiopulmonary resuscitation (CPR) course certificates required by § 11.201(i) of this part will only be required when, in the opinion of the Coast Guard, the geographic area over which service is authorized precludes obtaining medical services within a reasonable time.

(c) To obtain an endorsement for sail or auxiliary sail vessels, the applicant must submit evidence of 4 months of service on sail or auxiliary sail vessels. The required 4 months of service may have been obtained prior to issuance of the license or MMC endorsement.

(d) Holders of this endorsement are considered to be in compliance with the STCW Convention (incorporated by reference, see § 11.102 of this part) while operating within the limitations of this endorsement.

§ 11.430 Endorsements for the Great Lakes and inland waters.

(a) Any officer endorsement issued for service on Great Lakes and inland waters self-propelled vessels, excluding towing vessels, is valid on all of the inland waters of the United States as defined in § 10.107 of this subchapter.

(b) Any officer endorsement issued for service on inland waters self-propelled vessels, excluding towing vessels, is valid for the inland waters of the United States, excluding the Great Lakes.

(c) Any officer endorsement issued for service on inland waters or an inland route is valid for service on the sheltered waters of the Inside Passage between Puget Sound and Cape Spencer, Alaska.

(d) Because these officer endorsements authorize service on waters seaward of the International Regulations for Preventing Collisions at Sea (COLREGS) demarcation lines, as defined in 33 CFR part 80, the applicant must complete an examination on the COLREGS or the endorsement will exclude such waters.

(e) To obtain a master or mate endorsement with a tonnage limit of 200 GRT or more, whether an original, raise-in-grade, or increase in the scope of authority, the applicant must meet the training requirements in § 11.201(h) and (i) of this part and successfully complete radar observer training in § 11.480 of this part.

(f) Figure 11.430(f) illustrates the deck officer endorsement structure, including crossover points, for Great Lakes and inland waters service. The section numbers on the diagram refer to the specific requirements applicable.

Figure 11.430(f) -- Structure of deck officer endorsements for Great Lakes and inland waters service

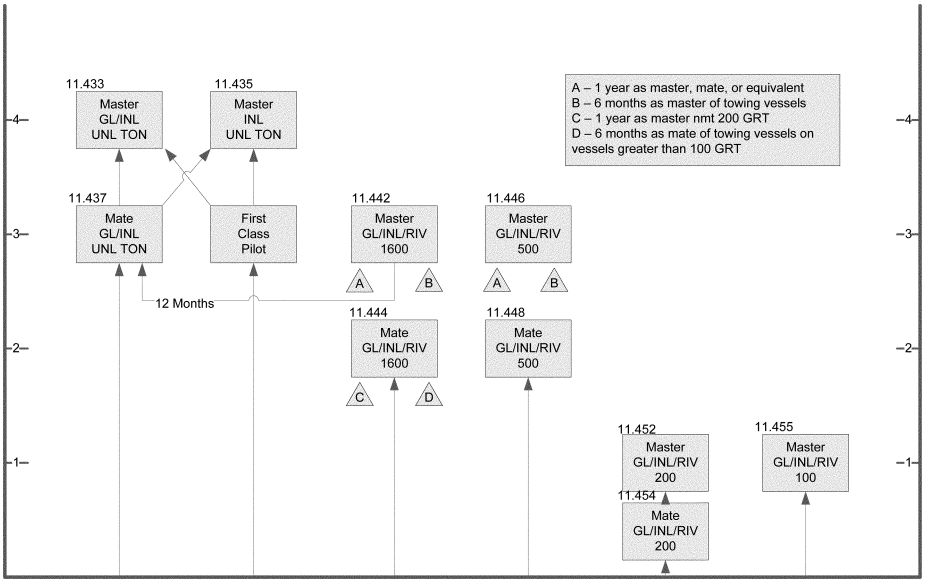

§ 11.431 Tonnage requirements for Great Lakes and inland endorsements for vessels of 1,600 GRT or more.

(a) All required experience for Great Lakes and inland unlimited endorsements must be obtained on vessels of 100 GRT or more. At least one-half of the required experience must be obtained on vessels of 1,600 GRT or more.

(b) Tonnage limitations may be imposed on these endorsements in accordance with § 11.402(b) and (c) of this subpart.

§ 11.433 Requirements for master of Great Lakes and inland self-propelled vessels of unlimited tonnage.

(a) The minimum service required to qualify an applicant for an endorsement as master of Great Lakes and inland self-propelled vessels of unlimited tonnage is—

(1) One year of service as a mate or first-class pilot while acting in the capacity of first mate of Great Lakes self-propelled vessels of 1,600 GRT or more while holding a license or MMC endorsement as mate inland or first-class pilot of Great Lakes and inland self-propelled vessels of unlimited tonnage;

(2) Two years of service as master of self-propelled vessels of 1,600 GRT or more on inland waters, excluding the Great Lakes; or

(3) One year of service upon Great Lakes waters while holding a license or MMC endorsement as mate or first-class pilot of Great Lakes and inland self-propelled vessels of 1,600 GRT or more. A minimum of 6 months of this service must have been in the capacity of first mate. Service as second mate is accepted for the remainder on a two-for-one basis to a maximum of 6 months (2 days of service equals 1 day of creditable service).

(b) [Reserved]

§ 11.435 Requirements for master of inland self-propelled vessels of unlimited tonnage.

(a) The minimum service required to qualify an applicant for an endorsement as master of self-propelled vessels of unlimited tonnage on inland waters, excluding the Great Lakes is—

(1) One year of service as first-class pilot (of other than canal and small lakes routes) or mate of Great Lakes or inland self-propelled vessels of 1,600 GRT or more while holding a license or MMC endorsement as mate inland or first-class pilot of Great Lakes and inland self-propelled vessels of unlimited tonnage; or

(2) Two years of service performing bridge watchkeeping duties under the supervision of the master or a qualified officer while holding a mate/first-class pilot license or MMC endorsement.

(b) [Reserved]

§ 11.437 Requirements for mate of Great Lakes and inland self-propelled vessels of unlimited tonnage.

(a) The minimum service required to qualify an applicant for an endorsement as mate of Great Lakes and inland self-propelled vessels of unlimited tonnage is—

(1) Three years of service in the deck department of self-propelled vessels, at least 3 months of which must have been on vessels on inland waters and at least 6 months of which must have been while performing bridge watchkeeping duties under the supervision of the master or a qualified officer;

(2) Graduation from the deck class of the Great Lakes Maritime Academy; or

(3) While holding a license or MMC endorsement as master of Great Lakes and inland self-propelled vessels of less than 1,600 GRT, 1 year of service as master on vessels of 200 GRT or more. A tonnage limitation may be placed on this license in accordance with § 11.431 of this subpart.

(b) Service gained in the engine department on vessels of appropriate tonnage may be creditable for up to 6 months of the service requirements under paragraph (a)(1) of this section.

§ 11.442 Requirements for master of Great Lakes and inland self-propelled vessels of less than 1,600 GRT.

(a) The minimum service required to qualify an applicant for an endorsement as master of Great Lakes and inland self-propelled vessels of less than 1,600 GRT is—

(1) Three years of total service on vessels. Eighteen months of the required service must have been on vessels of 100 GRT or more. One year of the required service must have been as a master, mate, or equivalent position on vessels of 100 GRT or more while holding a license or MMC endorsement as master, mate, or master of towing vessels; or

(2) Six months of service as operator on vessels of 100 GRT or more while holding a license or MMC endorsement as master of towing vessels.

(b) [Reserved]

§ 11.444 Requirements for mate of Great lakes and inland self-propelled vessels of less than 1,600 GRT.

(a) The minimum service required to qualify an applicant for an endorsement as mate of Great Lakes and inland self-propelled vessels of less than 1,600 GRT is—

(1) Two years of total service in the deck department of self-propelled vessels. One year of the required service must have been on vessels of 100 GRT or more. Six months of the required service must have been while performing bridge watchkeeping duties under the supervision of the master or a qualified officer on vessels of 100 GRT or more;

(2) One year of total service as master of self-propelled, sail, or auxiliary sail vessels, or operator of uninspected passenger vessels of 50 GRT or more while holding a license or MMC endorsement as master of self-propelled vessels of less than 200 GRT or OUPV; or

(3) Six months of total service as mate (pilot) of towing vessels on vessels of 100 GRT or more.

(b) [Reserved]

§ 11.446 Requirements for master of Great Lakes and inland self-propelled vessels of less than 500 GRT.

(a) The minimum service required to qualify an applicant for an endorsement as master of Great Lakes and inland self-propelled vessels of less than 500 GRT is—

(1) Three years of total service on vessels. One year of the required service must have been as a master, mate, or equivalent position on vessels of 50 GRT or more while holding a license or MMC endorsement as master, mate, or OUPV.

(2) [Reserved]

(b) An applicant holding a license or MMC endorsement as master of ocean, near-coastal, or Great Lakes and inland towing vessels is eligible for this endorsement after 6 months of service as master of towing vessels and completion of a limited examination. This requires 3 1/2 years of service. Two years of this service must have been served while holding a license or MMC endorsement as master or mate (pilot) of towing vessels, or mate.

§ 11.448 Requirements for mate of Great Lakes and inland self-propelled vessels of less than 500 GRT.

The minimum service required to qualify an applicant for an endorsement as mate of Great Lakes and inland self-propelled vessels of less than 500 GRT is 2 years of total service in the deck department of self-propelled vessels. One year of the required service must have been on vessels of 50 GRT or more. Three months of the required service must have been while performing bridge watchkeeping duties under the supervision of the master or a qualified officer on vessels of 50 GRT or more.

§ 11.450 Tonnage limitations and qualifying requirements for endorsements as master or mate of Great Lakes and inland vessels of less than 200 GRT.

(a) Except as noted in paragraph (d) of this section, all endorsements issued for master or mate of vessels of less than 200 GRT are issued in 50 GRT increments based on the applicant's qualifying experience in accordance with the provisions of § 11.422 of this subpart.

(b) Service gained in the engineroom on vessels of less than 200 GRT may be creditable for up to 25 percent of the deck service requirements for mate.

(c) When the service is obtained on vessels upon which personnel with licenses or endorsements are not required, the Coast Guard must be satisfied that the nature of this required service (i.e., size of vessel, route, equipment, etc.) is a reasonable equivalent to the duties performed on vessels which are required to engage individuals with endorsements.

(d) If more than 75 percent of the qualifying experience is obtained on vessels of 5 GRT or less, the license will automatically be limited to vessels of less than 25 GRT.

§ 11.452 Requirements for master of Great Lakes and inland self-propelled vessels of less than 200 GRT.

(a) The minimum service required to qualify an applicant for an endorsement or license as master of Great Lakes and inland self-propelled vessels of less than 200 GRT is 1 year of service on vessels. Six months of the required service must have been as master, mate, or equivalent position while holding a license or endorsement as master or mate of self-propelled vessels, or master or mate (pilot) of towing vessels, or OUPV. To obtain authority to serve on the Great Lakes, 3 months of the required service must have been on Great Lakes waters; otherwise the endorsement will be limited to the inland waters of the United States (excluding the Great Lakes).

(b) To obtain an endorsement for sail or auxiliary sail vessels, the applicant must have 6 months of service on sail or auxiliary sail vessels. This required service may have been obtained prior to issuance of the license or MMC endorsement as master.

§ 11.454 Requirements for mate of Great Lakes and inland self-propelled vessels of less than 200 GRT.

(a) The minimum service required to qualify an applicant for an endorsement as mate of Great Lakes and inland self-propelled vessels of less than 200 GRT is 6 months of service in the

deck department of self-propelled vessels. To obtain authority to serve on the Great Lakes, 3 months of the required service must have been on Great Lakes waters; otherwise the endorsement will be limited to the inland waters of the United States (excluding the Great Lakes).

(b) To obtain an endorsement for sail or auxiliary sail vessels, the applicant must submit evidence of 3 months of service on sail or auxiliary sail vessels.

(c) A mariner holding an endorsement as master of self-propelled vessels may be endorsed as mate of sail or auxiliary sail vessels upon presentation of 3 months service on sail or auxiliary sail vessels.

(d) The holder of a license or MMC endorsement as operator of inland uninspected passenger vessels may obtain this endorsement by successfully completing an examination on rules and regulations for small passenger vessels. To obtain authority to serve on the Great Lakes, 3 months of the required service must have been on Great Lakes waters; otherwise the endorsement will be limited to the inland waters of the United States (excluding the Great Lakes).

(e) To obtain a tonnage endorsement for 100 GRT or more, the applicant must complete the additional examination topics indicated in subpart I of this part.

§ 11.455 Requirements for master of Great Lakes and inland self-propelled vessels of less than 100 GRT.

(a) The minimum service required to qualify an applicant for an endorsement as master of Great Lakes and inland self-propelled vessels of less than 100 GRT is 1 year of total service in the deck department of self-propelled, sail, or auxiliary sail vessels. To obtain authority to serve on the Great Lakes, 3 months of the required service must have been on Great Lakes waters; otherwise the endorsement will be limited to the inland waters of the United States (excluding the Great Lakes).

(b) To obtain an endorsement for sail or auxiliary sail vessels, the applicant must submit evidence of 6 months of service on sail or auxiliary sail vessels. The required 6 months of service may have been obtained prior to issuance of the endorsement.

(c) All endorsements issued for master or mate of vessels of less than 100 GRT are issued in tonnage increments based on the applicant's qualifying experience in accordance with the provisions of § 11.422 of this subpart.

§ 11.456 Requirements for limited master of Great Lakes and inland self-propelled vessels of less than 100 GRT.

(a) An endorsement as limited master for vessels of less than 100 GRT upon Great Lakes and inland waters may be issued to an applicant to be employed by organizations such as formal camps, educational institutions, yacht clubs, and marinas with reduced service requirements. An endorsement issued under this paragraph is limited to the specific activity and the locality of the camp, yacht club, or marina. To obtain this restricted endorsement, an applicant must—

(1) Have 4 months of service in the operation of the type of vessel for which the endorsement is requested;

(2) Satisfactorily complete a safe boating course approved by the National Association of State Boating Law Administrators, a public education course conducted by the U.S. Power Squadron or the American Red Cross, or a Coast Guard-approved course. This course must have been completed within 5 years before the date of application; and

(3) Pass a limited examination appropriate for the activity to be conducted and the route authorized.

(b) The first aid and cardiopulmonary resuscitation (CPR) course certificates required by § 11.201(i) of this part will only be required when, in the opinion of the Coast Guard, the geographic area over which service is authorized precludes obtaining medical services within a reasonable time.

§ 11.457 Requirements for master of inland self-propelled vessels of less than 100 GRT.

(a) An applicant for an endorsement as master of inland self-propelled vessels of less than 100 GRT must present 1 year of service on any waters. In order to raise the tonnage limitation to more than 100 GRT, the examination

topics indicated in subpart I of this part must be completed in addition to satisfying the experience requirements of § 11.452(a) of this subpart.

(b) To obtain an endorsement for sail or auxiliary sail vessels, the applicant must submit evidence of 6 months of service on sail or auxiliary sail vessels. The required 6 months of service may have been obtained prior to issuance of the license or MMC endorsement.

(c) All endorsements issued for master or mate of vessels of less than 100 GRT are issued in tonnage increments based on the applicant's qualifying experience in accordance with the provisions of § 11.422 of this subpart.

§ 11.459 Requirements for national endorsement as master or mate on rivers.

(a) An applicant for an endorsement as master of river self-propelled vessels of unlimited tonnage must meet the same service requirements as master of inland self-propelled vessels of unlimited tonnage.

(b) An applicant for an endorsement as master or mate of river self-propelled vessels, with a limitation of 25 to 1,600 GRT, must meet the same service requirements as those required by this subpart for the corresponding tonnage Great Lakes and inland self-propelled endorsement. Service on the Great Lakes is not, however, required.

§ 11.462 Requirements for national endorsement as master or mate of uninspected fishing industry vessels.

(a) This section applies to endorsements for masters and mates of all vessels, however propelled, navigating the high seas, which are documented to engage in the fishing industry, with the exception of—

(1) Wooden ships of primitive build;

(2) Unrigged vessels; and

(3) Vessels of less than 200 GRT.

(b) Endorsements as master or mate of uninspected fishing industry vessels are issued for either ocean or near-coastal routes, depending on the examination completed. To qualify for an uninspected fishing industry vessel endorsement, the applicant must satisfy the training and examination requirements of § 11.201(h)(1) of this part.

(c) An applicant for an endorsement as master of uninspected fishing industry vessels must have 4 years of total service on ocean or near-coastal routes. Service on Great Lakes or inland waters may substitute for up to 2 years of the required service. One year of the required service must have been as master, mate, or equivalent position while holding a license or MMC endorsement as master or mate of self-propelled vessels, or master or mate (pilot) of towing vessels, or OUPV.

(1) To qualify for an endorsement for less than 500 GRT, at least 2 years of the required service, including the 1 year as master, mate, or equivalent, must have been on vessels of 50 GRT or more.

(2) To qualify for an endorsement for less than 1,600 GRT, at least 2 years of the required service, including the 1 year as master, mate, or equivalent, must have been on vessels of 100 GRT or more.

(3) To qualify for an endorsement for more than 1,600 GRT, but not more than 5,000 GRT, the vessel tonnage upon which the 4 years of required service was obtained will be used to compute the tonnage. The endorsement is limited to the maximum tonnage on which at least 25 percent of the required service was obtained or 150 percent of the maximum tonnage on which at least 50 percent of the service was obtained, whichever is higher. Limitations are in multiples of 1,000 GRT, using the next higher figure when an intermediate tonnage is calculated. An endorsement as master of uninspected fishing industry vessels authorizing service on vessels more than 1,600 GRT also requires 1 year as master, mate, or equivalent on vessels of 100 GRT or more.

(4) The tonnage limitation for this endorsement may be raised using one of the following methods but cannot exceed 5,000 GRT. Limitations are in multiples of 1,000 GRT, using the next higher figure when an intermediate tonnage is calculated.

(i) Three months of service as master on a vessel results in a limitation in that capacity equal to the tonnage of that vessel rounded up to the next multiple of 1,000 GRT.

(ii) Six months of service as master on a vessel results in a limitation in that capacity equal to 150 percent of the tonnage of that vessel.

(iii) Six months of service as master on vessels more than 1,600 GRT results in raising the limitation to 5,000 GRT.

(iv) Six months of service as mate on vessels more than 1,600 GRT results in raising the limitation for master to the tonnage on which at least 50 percent of the service was obtained.

(v) Two years of service as a deckhand on a vessel while holding a license or MMC endorsement as master results in a limitation on the MMC equal to 150 percent of the tonnage of that vessel up to 5,000 GRT.

(vi) One year of service as deckhand on a vessel while holding a license or MMC endorsement as master results in a limitation on the MMC equal to the tonnage of that vessel.

(d) An applicant for an endorsement as mate of uninspected fishing industry vessels must have 3 years of total service on ocean or near-coastal routes. Service on Great Lakes or inland waters may substitute for up to 18 months of the required service.

(1) To qualify for an endorsement of less than 500 GRT, at least 1 year of the required service must have been on vessels of 50 GRT or more.

(2) To qualify for an endorsement of less than 1,600 GRT, at least 1 year of the required service must have been on vessels of 100 GRT or more.

(3) To qualify for an endorsement of more than 1,600 GRT, but not more than 5,000 GRT, the vessel tonnage upon which the 3 years of required service was obtained will be used to compute the tonnage. The endorsement is limited to the maximum tonnage on which at least 25 percent of the required service was obtained, or 150 percent of the maximum tonnage on which at least 50 percent of the service was obtained, whichever is higher. Limitations are in multiples of 1,000 GRT, using the next higher figure when an intermediate tonnage is calculated.

(4) The tonnage limitation on this endorsement may be raised using one of the following methods, but cannot exceed 5,000 GRT. Limitations are in multiples of 1,000 GRT, using the next higher figure when an intermediate tonnage is calculated.

(i) Three months of service as mate on a vessel results in a limitation in that capacity equal to the tonnage of that vessel rounded up to the next multiple of 1,000 GRT.

(ii) Six months of service as mate on a vessel results in a limitation in that capacity equal to 150 percent of the tonnage of that vessel.

(iii) Six months of service as mate on vessels more than 1,600 GRT results in raising the limitation to 5,000 GRT.

(iv) One year of service as deckhand on vessels more than 1,600 GRT while holding a license or MMC endorsement as mate, results in raising the limitation on the MMC to 5,000 GRT;

(v) Two years of service as a deckhand on a vessel while holding a license or MMC endorsed as mate results in a limitation on the MMC equal to 150 percent of the tonnage of that vessel up to 5,000 GRT.

(vi) One year of service as deckhand on a vessel while holding a license or MMC endorsement as mate results in a limitation on the MMC equal to the tonnage of that vessel.

(e) Applicants may request an oral examination on the subjects listed in subpart I of this part.

§ 11.463 General requirements for national endorsements as master, mate (pilot), and apprentice mate (steersman) of towing vessels.

(a) The Coast Guard issues the following endorsements for towing vessels:

(1) Master of towing vessels.

(2) Master of towing vessels, limited.

(3) Mate (pilot) of towing vessels.

(4) Apprentice mate (steersman).

(5) Apprentice mate (steersman), limited.

(b) An endorsement as master of towing vessels means an endorsement to operate towing vessels not restricted to local areas designated by OCMIs. This also applies to a mate (pilot) of towing vessels.

(c) For this section, ''limited'' means an endorsement to operate a towing vessel of less than 200 GRT only within a local area on the Great Lakes, inland waters, or Western Rivers designated by the OCMI.

(d) Mariners who met the training and service requirements for towing vessels before May 21, 2001, and have maintained a valid Coast Guard-issued credential may obtain a towing endorsement if they meet the following:

(1) Demonstrate at least 90 days of towing service before May 21, 2001.

(2) Provide evidence of successfully completing the apprentice mate exam, its predecessor exam, or a superior exam.

(3) Meet the renewal requirements in § 10.227(e)(6)(i) of this subchapter.

(e) Mariners who operated towing vessels in the offshore oil and mineral industry prior to October 15, 2010, may obtain a towing endorsement until December 24, 2018 as follows:

(1) Mariners who held officer endorsements as operator of uninspected towing vessels (OUTV) or mate or master of inspected self-propelled vessels may qualify for a towing endorsement if they meet the following:

(i) Provide evidence of at least 90 days of service on towing vessels in the offshore oil and mineral industry prior to October 15, 2010.

(ii) Provide evidence of successfully completing the apprentice mate (steersman) examination, its predecessor exam, or a superior exam.

(iii) Meet the renewal requirements in § 10.227(e)(6) of this subchapter.

(2) Mariners who have not held any of the officer endorsements listed in paragraph (e)(1) of this section may qualify for an endorsement as master of towing vessels if they meet the following:

(i) Provide evidence of at least 48 months of service on towing vessels in the offshore oil and mineral industry prior to October 15, 2010.

(ii) Successfully complete the appropriate apprentice mate (steersman) exam.

(3) Mariners who have not held any of the officer endorsements listed in paragraph (e)(1) of this section may qualify for an endorsement as mate of towing vessels if they meet the following:

(i) Provide evidence of at least 36 months of service on towing vessels in the offshore oil and mineral industry prior to October 15, 2010.

(ii) Successfully complete the appropriate apprentice mate (steersman) exam.

(f) Deck officers who serve on the following seagoing vessels must comply with the requirements of §§ 11.309 and 11.311 of this subpart for the appropriate STCW endorsement:

(1) A towing vessel on an oceans voyage operating beyond near-coastal waters.

(2) A towing vessel on an international voyage.

(3) A towing vessel of 200 GRT or more on a domestic, near-coastal voyage.

(g) Endorsements as mate (pilot) or master of towing vessels may be issued with a restriction to specific types of towing vessels and/or towing operations such as articulated tug barge (ATB) vessels that do not routinely perform all of the tasks identified in the Towing Officer Assessment Record (TOAR).

(h) Figure 11.463(h) illustrates the towing officer endorsement structure, including crossover points. The section numbers on the diagram refer to the specific requirements applicable.

Figure 11.463(h) -- Structure of towing officer endorsements

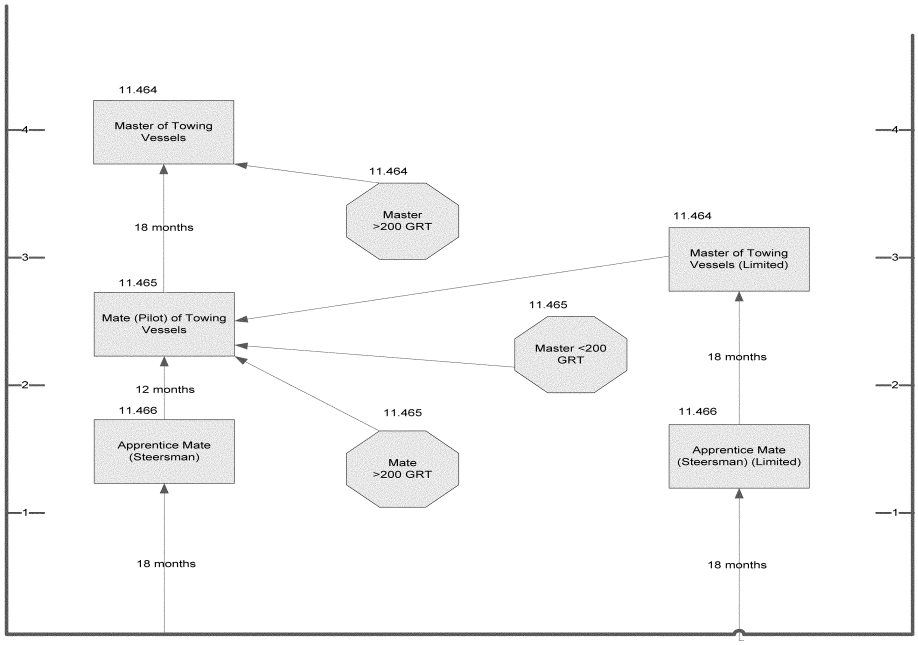

§ 11.464 Requirements for national endorsements as master of towing vessels.

(a) An applicant for an endorsement as master of towing vessels with a route listed in column 1 of table 1 to this section, must complete the service requirements indicated in columns 2 through 5. Applicants may serve on the subordinate routes listed in column 5 without further endorsement.

TABLE 1 TO § 11.464(a)—REQUIREMENTS FOR ENDORSEMENT AS MASTER OF TOWING VESSELS [1]

1 Route endorsed	2 Total service [2]	3 TOS [3] on T/V as mate (pilot)	4 TOS [3] on particular route	5 Sub-ordinate route authorized
(1) OCEANS (O)	48	18	3	NC, GL–I.
(2) NEAR-COASTAL (NC)	48	18	3	GL–I.
(3) GREAT LAKES-INLAND (GL–I)	48	18	3	None.
(4) WESTERN RIVERS (WR)	48	18	3	None.

[1] The holder of an endorsement as master of towing vessels may have an endorsement placed on the MMC as mate (pilot) of towing vessels for a route superior to the current route on which the holder has no operating experience after passing an examination for that additional route. After the holder completes 90 days of experience and completes a Towing Officer Assessment Record (TOAR) on that route, the Coast Guard will add it to the holder's endorsement as master of towing vessels and remove the endorsement for mate (pilot) of towing vessels.
[2] Service is in months.
[3] TOS is time of service.

(b) A person holding this endorsement may qualify for an STCW endorsement, according to §§ 11.307, 11.311, 11.313, and 11.315 of this part.

(c) To obtain an endorsement as master of towing vessels (limited), applicants must complete the requirements listed in columns 2 through 5 of table 1 to paragraph (c) of this section.

TABLE 1 TO § 11.464(c)—REQUIREMENTS FOR NATIONAL ENDORSEMENT AS MASTER OF TOWING VESSELS (LIMITED)

1 Route endorsed	2 Total service [1]	3 TOS [2] on T/V as limited apprentice mate (steersman)	4 TOAR or an approved course	5 TOS on particular route
LIMITED LOCAL AREA (LLA)	36	18	Yes	3.

[1] Service is in months.
[2] TOS is time of service.

(d) Those holding a license or MMC endorsement as mate (pilot) of towing vessels, may have master of towing vessels (limited) added to their MMC for a limited local area within the scope of their current route.

(e) Before serving as master of towing vessels on the Western Rivers, mariners must possess 90 days of observation and training and their MMC must include an endorsement for Western Rivers.

(f) Each company must maintain evidence that every vessel it operates is under the direction and control of a mariner with the appropriate endorsement and experience, including 30 days of observation and training on the intended route other than Western Rivers.

(g) Those holding a license or MMC endorsement as a master of self-propelled vessels of more than 200 GRT, may operate towing vessels within any restrictions on their endorsement if they—

(1) Have a minimum of 30 days of training and observation on towing vessels for the route being assessed, except as noted in paragraph (f) of this section; and

(2) Either—

(i) Hold a completed Towing Officer Assessment Record (TOAR) described in § 10.404(c) of this part that shows evidence of assessment of practical demonstration of skills; or

(ii) Complete an approved training course.

(h) A license or MMC does not need to include a towing endorsement if mariners hold a TOAR or complete an approved training course.

§ 11.465 Requirements for national endorsements as mate (pilot) of towing vessels.

(a) To obtain an endorsement as mate (pilot) of towing vessels endorsed with a route listed in column 1 of Table 1 to paragraph (a) of this section, applicants must complete the service in columns 2 through 5. Mariners holding a license or MMC endorsement as master of towing vessels (limited) wishing to upgrade it to mate (pilot) of towing vessels must complete the service in columns 5 and 6. An endorsement with a route endorsed in column 1 authorizes service on the subordinate routes listed in column 7 without further endorsement. Time of service requirements as an apprentice mate (steersman) of towing vessels may be reduced by an amount equal to the time specified in the approval letter for a completed Coast Guard-approved training program.

TABLE 1 TO § 11.465(a)—REQUIREMENTS FOR NATIONAL ENDORSEMENT AS MATE (PILOT [1]) OF TOWING VESSELS

1 Route endorsed	2 Total service [2]	3 TOS [3] on T/V as apprentice mate (steersman) [4]	4 TOS on particular route	5 TOAR [5] or an approved course	6 30 days of observation and training while holding master (limited) and pass an examination	7 Subordinate route authorized
(1) OCEANS (O)	30	12	3	YES	YES	NC, GL–I.
(2) NEAR-COASTAL (NC)	30	12	3	YES	YES	GL–I.
(3) GREAT LAKES-INLAND (GL–I).	30	12	3	YES	YES.	
(4) WESTERN RIVERS (WR).	30	12	3	YES	NO (90 days service required).	

[1] For all inland routes, as well as Western Rivers, the endorsement as pilot of towing vessels is equivalent to that as mate of towing vessels. All qualifications and equivalencies are the same.
[2] Service is in months unless otherwise indicated.
[3] TOS is time of service.
[4] Time of service requirements as an apprentice mate (steersman) of towing vessels may be reduced by an amount equal to the time specified in the approval letter for a completed Coast Guard-approved training program.
[5] TOAR is a Towing Officer Assessment Record.

(b) Before serving as mate (pilot) of towing vessels on the Western Rivers, mariners must possess 90 days of observation and training and have their MMC include an endorsement for Western Rivers.

(c) Each company must maintain evidence that every vessel it operates is under the direction and control of a mariner with the appropriate endorsement and experience, including 30 days of observation and training on the intended route other than Western Rivers.

(d) Those holding a license or MMC endorsement as a mate of inspected, self-propelled vessels of more than 200 GRT or one as first-class pilot, may operate towing vessels within any restrictions on their credential if they—

(1) Have a minimum of 30 days of training and observation on towing vessels for the route being assessed, except as noted in paragraph (b) of this section; and

(2) Hold a completed Towing Officer Assessment Record (TOAR) described in § 10.404(c) of this subchapter that shows evidence of assessment of practical demonstration of skills.

(e) A license or MMC does not need to include a towing endorsement if you hold a TOAR or a course completion certificate.

(f) Those holding any endorsement as a master of self-propelled vessels of any tonnage that is less than 200 GRT, except for the limited masters endorsements specified in §§ 11.429 and 11.456 of this subpart, may obtain an endorsement as mate (pilot) of towing vessels by meeting the following requirements:

(1) Providing proof of 36 months of service as a master under the authority of an endorsement described in this paragraph.

(2) Successfully completing the appropriate TOAR.

(3) Successfully completing the appropriate apprentice mate exam.

(4) Having a minimum of 30 days of training and observation on towing vessels for the route being assessed, except as noted in paragraph (b) of this section.

(g) An approved training course for mate (pilot) of towing vessels must include formal instruction and practical demonstration of proficiency either onboard a towing vessel or at a shoreside training facility before a designated examiner, and must cover the material (dependent upon route) required by Table 2 to § 11.910 of this part for apprentice mate (steersman), towing vessels on ocean and near-coastal routes; apprentice mate (steersman), towing vessels on Great Lakes and inland routes; or steersman, towing vessels on Western Rivers routes.

(h) A person holding this endorsement may qualify for an STCW endorsement, according to §§ 11.309, 11.317, 11.319, and 11.321 of this part.

[USCG–2004–17914, 78 FR 77909, Dec. 24, 2013, as amended by USCG–2014–0688, 79 FR 58277, Sept. 29, 2014]

§ 11.466 Requirements for national endorsements as apprentice mate (steersman) of towing vessels.

(a) As Table 1 to § 11.466(a) shows, to obtain an endorsement as apprentice mate (steersman) of towing vessels listed in column 1, endorsed with a route listed in column 2, mariners must complete the service requirements indicated in columns 3 through 6.

TABLE 1 TO § 11.466(a)—REQUIREMENTS FOR NATIONAL ENDORSEMENT AS APPRENTICE MATE (STEERSMAN) OF TOWING VESSELS

1 Endorsement	2 Route endorsed	3 Total service [1]	4 TOS [2] on T/V	5 TOS on particular route	6 Pass examination [3]
(1) APPRENTICE MATE (STEERSMAN)	OCEANS (O)	18	12	3	YES.
	NEAR-COASTAL (NC)	18	12	3	YES.
	GREAT LAKES	18	12	3	YES.
	INLAND (GL–I)	18	12	3	YES.
	WESTERN RIVERS (WR)	18	12	3	YES.
(2) APPRENTICE MATE (STEERSMAN) (LIMITED).	NOT APPLICABLE	18	12	3	YES.

[1] Service is in months.
[2] TOS is time of service.
[3] The examination for apprentice mate is specified in subpart I of this part.

(b) Those holding a license or endorsement as apprentice mate (steersman) of towing vessels may obtain a restricted endorsement as apprentice mate (steersman) (limited). This endorsement will go on the mariner's MMC after passing an examination for a route that is not included in the current endorsements and on which the mariners have no operating experience. Upon completion of 3 months of experience on that route, mariners may have the restriction removed.

§ 11.467 Requirements for a national endorsement as operator of uninspected passenger vessels of less than 100 GRT.

(a) This section applies to an applicant for the endorsement to operate an uninspected vessel of less than 100 GRT, equipped with propulsion machinery of any type, carrying six or fewer passengers.

(b) An endorsement as OUPV for near-coastal waters limits the holder to service on domestic, near-coastal waters not more than 100 miles offshore, the Great Lakes, and all inland waters. Endorsements issued for inland waters include all inland waters except the Great Lakes. Endorsements may be issued for a particular local area under paragraph (f) or paragraph (g) of this section.

(c) For an endorsement as OUPV on near-coastal waters, an applicant must have a minimum of 12 months of experience in the operation of vessels, including at least 3 months of service on vessels operating on ocean or near-coastal waters.

(d) For an endorsement as OUPV on the Great Lakes and inland waters, an applicant must have 12 months of service on Great Lakes or inland waters, including at least 3 months of service operating vessels on Great Lakes waters.

(e) For an endorsement as OUPV on inland waters, an applicant must have a minimum of 12 months of experience in the operation of vessels.

(f) A limited OUPV endorsement may be issued to an applicant to be employed by organizations such as formal camps, yacht clubs, educational institutions, and marinas. An endorsement issued under this paragraph will be limited to the specific activity and the

locality of the camp, yacht club, or marina. In order to obtain this restricted endorsement, an applicant must—

(1) Have 3 months of service in the operation of the type of vessel for which the endorsement is requested;

(2) Satisfactorily complete a safe-boating course approved by the National Association of State Boating Law Administrators, or those public education courses conducted by the U.S. Power Squadron or the American National Red Cross or a Coast Guard-approved course; and

(3) Pass a limited examination appropriate for the activity to be conducted and the route authorized.

(4) Hold the first aid and cardiopulmonary resuscitation (CPR) course certificates required by § 11.201(i) of this part when, in the opinion of the Coast Guard, the geographic area over which service is authorized precludes obtaining medical services within a reasonable time.

(g) Restricted OUPV endorsements may be issued to applicants to be employed on inland navigable waters. An endorsement under this paragraph will be limited to specific bodies of water that have been approved by the cognizant OCMI. In order to obtain this endorsement, the applicant must be qualified for the endorsement under this section; however, the OCMI may modify the service and examination requirements as follows:

(1) At least 3 months of service in the operation of the type of vessel and on each body of water for which the endorsement is requested.

(2) Satisfactorily pass an examination appropriate for the activity to be conducted and the waters authorized.

(h) An applicant for an officer endorsement as OUPV who speaks Spanish, but not English, may be issued an officer endorsement restricted to the navigable waters of the United States in the vicinity of Puerto Rico.

§ 11.468 National officer endorsements for mobile offshore drilling units (MODUs).

Officer endorsements for service on MODUs authorize service on units of unlimited tonnage upon ocean waters while on location or while underway, as restricted on the endorsement, except when moving independently under their own power.

§ 11.470 National officer endorsements as offshore installation manager.

(a) Officer endorsements as offshore installation manager (OIM) include:

(1) OIM Unrestricted.

(2) OIM Surface Units on Location.

(3) OIM Surface Units Underway.

(4) OIM Bottom Bearing Units on Location.

(5) OIM Bottom Bearing Units Underway.

(b) To qualify for an endorsement as OIM unrestricted, an applicant must—

(1) Present evidence of one of the following:

(i) Four years of employment assigned to MODUs, including at least 1 year of service as driller, assistant driller, toolpusher, assistant toolpusher, barge supervisor, mechanical supervisor, electrician, crane operator, ballast control operator, or equivalent supervisory position on MODUs, with a minimum of 14 days of that supervisory service on surface units.

(ii) A degree from a program in engineering or engineering technology which is accredited by the Accreditation Board for Engineering and Technology (ABET). The National Maritime Center will give consideration to accepting education credentials from programs having other than ABET accreditation. An applicant qualifying through a degree program must also have at least 168 days of service as driller, assistant driller, toolpusher, assistant toolpusher, barge supervisor, mechanical supervisor, electrician, crane operator, ballast control operator, or equivalent supervisory position on MODUs, with a minimum of 14 days of that supervisory service on surface units;

(2) Present evidence of training course completion as follows:

(i) A certificate from a Coast Guard-approved stability course approved for OIM unrestricted.

(ii) A certificate from a Coast Guard-approved survival suit and survival craft training course.

(iii) A certificate from a firefighting training course as required by § 11.201(h) of this part; and

(3) Provide a recommendation signed by a senior company official which—

(i) Provides a description of the applicant's experience and qualifications;

(ii) Certifies that the individual has successfully directed, while under the supervision of an experienced rig mover, two rig moves each of surface units and of bottom bearing units; and

(iii) Certifies that one of the rig moves required under paragraph (b)(3)(ii) of this section was completed within 1 year preceding date of application.

(c) An applicant for an endorsement as OIM unrestricted who holds an unlimited license or MMC endorsement as master or chief mate must satisfy the requirements in paragraphs (b)(2) and (b)(3) of this section and have at least 84 days of service on surface units and at least 28 days of service on bottom bearing units.

(d) To qualify for an endorsement as OIM surface units on location, an applicant must—

(1) Present evidence of one of the following:

(i) Four years of employment assigned to MODUs, including at least 1 year of service as driller, assistant driller, toolpusher, assistant toolpusher, barge supervisor, mechanical supervisor, electrician, crane operator, ballast control operator or equivalent supervisory position on MODUs, with a minimum of 14 days of that supervisory service on surface units.

(ii) A degree from a program in engineering or engineering technology which is accredited by the Accreditation Board for Engineering and Technology (ABET). The National Maritime Center will give consideration to accepting education credentials from programs having other than ABET accreditation. An applicant qualifying through a degree program must also have at least 168 days of service as driller, assistant driller, toolpusher, assistant toolpusher, barge supervisor, mechanical supervisor, electrician, crane operator, ballast control operator, or equivalent supervisory position of MODUs, with a minimum of 14 days of that supervisory service on surface units; and

(2) Present evidence of training course completion as follows:

(i) A certificate from a Coast Guard-approved stability course approved for a license or MMC endorsement as OIM surface units.

(ii) A certificate from a Coast Guard-approved survival suit and survival craft training course.

(iii) A certificate from a firefighting training course as required by §11.201(h) of this part.

(e) An applicant for an endorsement as OIM surface units on location who holds an unlimited license or MMC endorsement as master or chief mate must satisfy the requirements of paragraph (d)(2) of this section and have at least 84 days of service on surface units.

(f) To qualify for an endorsement as OIM surface units underway, an applicant must—

(1) Provide the following:

(i) Evidence of the experience described in paragraph (d)(1) of this section and a recommendation signed by a senior company official which—

(A) Provides a description of the applicant's experience and qualifications;

(B) Certifies that the individual has successfully directed, while under the supervision of an experienced rig mover, three rig moves of surface units; and

(C) Certifies that one of the rig moves required under paragraph (f)(1)(i)(B) of this section was completed within 1 year preceding date of application; or

(ii) A recommendation signed by a senior company official which—

(A) Provides a description of the applicant's experience and company qualifications program completed;

(B) Certifies that the applicant has witnessed ten rig moves either as an observer in training or as a rig mover under supervision;

(C) Certifies that the individual has successfully directed, while under the supervision of an experienced rig mover, five rig moves of surface units; and

(D) Certifies that one of the rig moves required under paragraph (f)(1)(ii)(C) of this section was completed within 1 year preceding the date of application; and

(2) Present evidence of training course completion as follows:

(i) A certificate from a Coast Guard-approved stability course approved for an OIM surface units endorsement.

(ii) A certificate from a Coast Guard-approved survival suit and survival craft training course.

(iii) A certificate from a firefighting training course as required by § 11.201(h) of this part.

(g) An applicant for endorsement as OIM surface units underway who holds an unlimited license or MMC endorsement as master or chief mate must satisfy the requirements in paragraph (f)(2) of this section and provide a company recommendation signed by a senior company official which—

(1) Provides a description of the applicant's experience and qualifications;

(2) Certifies that the individual has successfully directed, while under the supervision of an experienced rig mover, three rig moves on surface units; and

(3) Certifies that one of the rig moves required under paragraph (g)(2) of this section was completed within 1 year preceding the date of application.

(h) To qualify for an endorsement as OIM bottom bearing units on location, an applicant must—

(1) Present evidence of one of the following:

(i) Four years of employment assigned to MODUs, including at least 1 year of service as driller, assistant driller, toolpusher, assistant toolpusher, barge supervisor, mechanical supervisor, electrician, crane operator, ballast control operator, or equivalent supervisory position on MODUs.

(ii) A degree from a program in engineering or engineering technology that is accredited by ABET. The National Maritime Center will give consideration to accepting education credentials from programs having other than ABET accreditation. An applicant qualifying through a degree program must also have at least 168 days of service as driller, assistant driller, toolpusher, assistant toolpusher, barge supervisor, mechanical supervisor, electrician, crane operator, ballast control operator, or equivalent supervisory position on MODUs; and

(2) Present evidence of training course completion as follows:

(i) A certificate from a Coast Guard-approved survival suit and survival craft training course.

(ii) A certificate from a firefighting training course as required by § 11.201(h) of this part.

(i) An applicant for an endorsement as OIM bottom bearing units on location who holds an unlimited license or MMC endorsement as master or chief mate must satisfy paragraph (h)(2) of this section and have at least 28 days of service on bottom bearing units.

(j) To qualify for an endorsement as OIM bottom bearing units underway, an applicant must—

(1) Provide the following:

(i) Evidence of the experience described in paragraph (h)(1) of this section with a recommendation signed by a senior company official which—

(A) Provides a description of the applicant's experience and qualifications;

(B) Certifies that the individual has successfully directed, while under the supervision of an experienced rig mover, three rig moves of bottom bearing units; and

(C) Certifies that one of the rig moves required under paragraph (j)(1)(i)(B) of this section was completed within 1 year preceding date of application; or

(ii) A recommendation signed by a senior company official which—

(A) Provides a description of the applicant's experience and company qualifications program completed;

(B) Certifies that the applicant has witnessed ten rig moves either as an observer in training or as a rig mover under supervision;

(C) Certifies that the individual has successfully directed, while under the supervision of an experienced rig mover, five rig moves of bottom bearing units; and

(D) Certifies that one of the rig moves required under paragraph (j)(1)(ii)(C) of this section was completed within 1 year preceding date of application; and

(2) Present evidence of training course completion as follows:

(i) A certificate from a Coast Guard-approved stability course approved for a license or MMC endorsement as OIM bottom bearing units.

(ii) A certificate from a Coast Guard-approved survival suit and survival craft training course.

(iii) A certificate from a firefighting training course as required by § 11.201(h) of this part.

(k) An applicant for endorsement as OIM bottom bearing units underway who holds an unlimited license or MMC endorsement as master or chief mate must satisfy the requirements in paragraph (j)(2) of this section and provide a company recommendation signed by a senior company official, which—

(1) Provides a description of the applicant's experience and qualifications;

(2) Certifies that the individual has successfully directed, while under the supervision of an experienced rig mover, three rig moves of bottom bearing units; and

(3) Certifies that one of the rig moves required under paragraph (k)(2) of this section was completed within 1 year preceding the date of application.

§ 11.472 National officer endorsements as barge supervisor.

(a) To qualify for an endorsement as barge supervisor (BS), an applicant must—

(1) Present evidence of one of the following:

(i) Three years of employment assigned to MODUs including at least 168 days of service as driller, assistant driller, toolpusher, assistant tool pusher, mechanic, electrician, crane operator, subsea specialist, ballast control operator, or equivalent supervisory position on MODUs. At least 84 days of that service must have been as a ballast control operator, or barge supervisor trainee.

(ii) A degree from a program in engineering or engineering technology that is accredited by the Accreditation Board for Engineering and Technology (ABET). The National Maritime Center will give consideration to accepting education credentials from programs having other than ABET accreditation. An applicant qualifying through a degree program must also have at least 168 days of service as driller, assistant driller, toolpusher, assistant toolpusher, mechanic, electrician, crane operator, subsea specialist, ballast control operator, or equivalent supervisory position on MODUs. At least 84 days of that service must have been as a ballast control operator, or barge supervisor trainee; and

(2) Present evidence of training course completion as follows:

(i) A certificate from a Coast Guard-approved stability course approved for barge supervisor.

(ii) A certificate from a Coast Guard-approved survival suit and survival craft training course.

(iii) A certificate from a firefighting training course as required by § 11.201(h) of this part.

(b) An applicant for an endorsement as barge supervisor who holds an unlimited license or MMC endorsement as master or mate must satisfy the requirements in paragraph (a)(2) of this section and have at least 84 days of service as ballast control operator or barge supervisor trainee.

§ 11.474 National officer endorsements as ballast control operator.

(a) To qualify for an endorsement as ballast control operator (BCO), an applicant must—

(1) Present evidence of one of the following:

(i) One year of employment assigned to MODUs, including at least 28 days of service as a trainee under the supervision of an individual holding a license or MMC endorsement as ballast control operator.

(ii) A degree from a program in engineering or engineering technology that is accredited by the Accreditation Board for Engineering and Technology (ABET). The National Maritime Center will give consideration to accepting education credentials from programs having other than ABET accreditation. An applicant qualifying through a degree program must also have at least 28 days of service as a trainee under the supervision of an individual holding a license or MMC endorsement as ballast control operator; and

(2) Present evidence of training course completion as follows:

(i) A certificate from a Coast Guard-approved stability course approved for barge supervisor or ballast control operator.

(ii) A certificate from a Coast Guard-approved survival suit and survival craft training course.

(iii) A certificate from a firefighting training course as required by § 11.201(h) of this part.

(b) An applicant for an endorsement as BCO who holds an unlimited license or MMC endorsement as master, mate, chief engineer, or assistant engineer must satisfy the requirements in paragraph (a)(2) of this section and have at least 28 days of service as a trainee under the supervision of an individual holding an endorsement as BCO.

§ 11.480 Radar observer.

(a) This section contains the requirements that an applicant must meet to qualify as a radar observer.

(b) If an applicant meets the requirements of this section, one of the following radar observer endorsements will be added to his or her MMC:

(1) Radar observer (unlimited).

(2) Radar observer (inland waters and Gulf Intercoastal waterways (GIWW)).

(3) Radar observer (rivers).

(c) Radar observer (unlimited) is valid on all waters. Radar observer (inland waters and GIWW) is valid only for those waters other than the Great Lakes covered by the Inland Navigational Rules. Radar observer (rivers) is valid only on any river, canal, or similar body of water designated by the OCMI, but not beyond the boundary line.

(d) Except as provided by paragraph (e) of this section, each applicant for a radar observer endorsement or for renewal of a radar observer endorsement must complete the appropriate course approved by the Coast Guard, receive the appropriate certificate of training, and present the certificate or a copy of the certificate to the Coast Guard in person, by mail, fax, or other electronic means.

(e) A radar observer endorsement issued under this section is valid for 5 years from the date of issuance of the certificate of training from a course approved by the Coast Guard.

(f) A mariner may maintain the validity of a radar observer endorsement by completing a refresher or re-certification course approved for that purpose.

(g) An applicant for renewal of a license or MMC that does not need a radar observer endorsement may renew without meeting the requirements for the endorsement. However, a radar endorsement will not be placed on the MMC unless the mariner submits a course completion certificate or a copy of the certificate from an approved radar course.

(h) An applicant seeking to raise the grade of a license or MMC endorsement or increase its scope, where the increased grade or scope requires a radar observer certificate, may use an expired certificate to fulfill that requirement. However, a radar endorsement will not be placed on the MMC unless the mariner submits a course completion certificate or a copy of the certificate from an approved radar course.

§ 11.482 Assistance towing.

(a) This section contains the requirements to qualify for an endorsement authorizing a mariner to engage in assistance towing. Except as noted in this paragraph, holders of MMC officer and OUPV endorsements must have an assistance towing endorsement to engage in assistance towing. Holders of endorsements as master or mate (pilot) of towing vessels or master or mate endorsements authorizing service on inspected vessels of 200 GRT or more do not need the assistance towing endorsement.

(b) An applicant for an assistance towing endorsement must pass a written examination or complete a Coast Guard-approved course demonstrating his or her knowledge of assistance towing safety, equipment, and procedures.

(c) The holder of a license or MMC for master, mate, or operator endorsed for assistance towing is authorized to engage in assistance towing on any vessel within the scope of the license or MMC.

(d) The period of validity of the endorsement is the same as the license or MMC on which it is included, and it may be renewed with the MMC.

§ 11.491 National officer endorsements for service on offshore supply vessels.

(a) Each officer endorsement for service on offshore supply vessels (OSVs)

authorizes service on OSVs as defined in 46 U.S.C. 2101(19) and as interpreted under 46 U.S.C. 14104(b), subject to any restrictions placed on the license or MMC.

(b) For those officers who previously received a 500 GRT limitation on their national officer endorsement due to the definition of OSV existing before October 15, 2010, the limitation will be raised to 1,600 GRT to be consistent with other national officer endorsements.

§ 11.493 Master (OSV).

(a) The minimum service required to qualify an applicant for an endorsement as master (OSV) of offshore supply vessels less than 1,600 GRT/3,000 GT is 24 months of total service as mate, chief mate, or master of ocean or near-coastal and/or Great Lakes on self-propelled vessels of more than 100 GRT. Service on inland waters may substitute for up to 50 percent of the required service. At least one-half of the required experience must be served as chief mate.

(b) The minimum service required to qualify an applicant for master (OSV) of 1,600 GRT/3,000 GT or more is 24 months of total service as mate, chief mate, or master of ocean or near-coastal and/or Great Lakes on self-propelled vessels of more than 100 GRT. At least one-half of the required experience must be served as chief mate and be obtained on vessels of 1,600 GRT/3,000 GT or more.

(c) If an applicant for master (OSV) of more than 1,600 GRT/3,000 GT does not have the service on vessels of 1,600 GRT/3,000 GT or more as required by paragraph (b) of this section, a tonnage limitation will be placed on the officer endorsement based on the applicant's qualifying experience. The endorsement will be limited to the maximum tonnage on which at least 25 percent of the required experience was obtained, or 150 percent of the maximum tonnage on which at least 50 percent of the service was obtained, whichever is higher. However, the minimum tonnage limitation calculated according to this paragraph will be 2,000 GRT. Limitations are in multiples of 1,000 GRT using the next higher figure when an intermediate tonnage is calculated. In no case will the limitation exceed 10,000 GRT/GT for OSVs unless the applicant meets the full requirements for an unlimited tonnage endorsement.

(d) A person holding an endorsement as master (OSV) may qualify for an STCW endorsement, according to §§ 11.305 and 11.311 of this part.

(e) The Coast Guard may exempt an applicant from meeting any requirement under STCW Regulation II/2 (incorporated by reference, see § 11.102 of this part) that the Coast Guard determines to be inappropriate or unnecessary for service on an OSV, or that the applicant meets under the equivalency provisions of Article IX of STCW.

[USCG–2004–17914, 78 FR 77909, Dec. 24, 2013, as amended by USCG–2014–0688, 79 FR 58277, Sept. 29, 2014]

§ 11.495 Chief mate (OSV).

(a) The minimum service required to qualify an applicant for an endorsement as chief mate (OSV) of offshore supply vessels less than 1,600 GRT/3,000 GT is 12 months of total service as mate, chief mate, or master of ocean or near-coastal and/or Great Lakes on self-propelled vessels of more than 100 GRT. Service on inland waters may substitute for up to 50 percent of the required service.

(b) The minimum service required to qualify an applicant for as chief mate (OSV) of 1,600 GRT/3,000 GT or more is 12 months of total service as mate, chief mate, or master of ocean or near-coastal and/or Great Lakes on self-propelled vessels of more than 100 GRT. At least one-half of the required experience must be obtained on vessels of 1,600 GRT/3,000 GT or more.

(c) If an applicant for as chief mate (OSV) of 1,600 GRT/3,000 GT or more does not have the service on vessels of 1,600 GRT/3,000 GT or more as required by paragraph (b) of this section, a tonnage limitation will be placed on the officer endorsement based on the applicant's qualifying experience. The endorsement will be limited to the maximum tonnage on which at least 25 percent of the required experience was obtained, or 150 percent of the maximum tonnage on which at least 50 percent of the service was obtained, whichever is higher. However, the minimum tonnage limitation calculated according

to this paragraph will be 2,000 GRT. Limitations are in multiples of 1,000 GRT using the next higher figure when an intermediate tonnage is calculated. In no case will the limitation exceed 10,000 GRT/GT for OSVs unless the applicant meets the full requirements for an unlimited tonnage endorsement.

(d) A person holding an endorsement as chief mate (OSV) may qualify for an STCW endorsement, according to §§ 11.307 and 11.313 of this part.

(e) The Coast Guard may exempt an applicant from meeting any requirement under STCW Regulation II/2 (incorporated by reference, § 11.102 of this part) that the Coast Guard determines to be inappropriate or unnecessary for service on an OSV, or that the applicant meets under the equivalency provisions of Article IX of STCW.

[USCG–2004–17914, 78 FR 77909, Dec. 24, 2013, as amended by USCG–2014–0688, 79 FR 58277, Sept. 29, 2014]

§ 11.497 Mate (OSV).

(a) The minimum service required to qualify an applicant for an endorsement as mate (OSV) of offshore supply vessels is—

(1) Twenty-four months of total service in the deck department of ocean or near-coastal self-propelled, sail, or auxiliary sail vessels. Service on Great Lakes and inland waters may substitute for up to 1 year of the required service. One year of the required service must have been on vessels of more than 100 GRT; or

(2) One year of total service as part of an approved or accepted mate (OSV) training program.

(b) A person holding an endorsement as mate (OSV) may qualify for an STCW endorsement, according to § 11.309 of this part.

(c) The Coast Guard may exempt an applicant from meeting any requirement under STCW Regulation II/1 (incorporated by reference, see § 11.102 of this part) that the Coast Guard determines to be inappropriate or unnecessary for service on an OSV, or that the applicant meets under the equivalency provisions of Article IX of STCW.

Subpart E—Professional Requirements for National Engineer Officer Endorsements

§ 11.501 Grades and types of national engineer endorsements issued.

(a) National engineer endorsements are issued in the grades of—

(1) Chief engineer;

(2) First assistant engineer;

(3) Second assistant engineer;

(4) Third assistant engineer;

(5) Chief engineer (limited);

(6) Assistant engineer (limited);

(7) Designated duty engineer;

(8) Chief engineer uninspected fishing industry vessels;

(9) Assistant engineer uninspected fishing industry vessels;

(10) Chief engineer (MODU);

(11) Assistant engineer (MODU);

(12) Chief engineer (OSV); and

(13) Assistant engineer (OSV).

(b) Engineer endorsements issued in the grades of chief engineer (limited) and assistant engineer (limited) of steam, motor, and/or gas turbine-propelled vessels allow the holder to serve within any propulsion power limitations on vessels of unlimited tonnage on inland waters and of less than 1,600 GRT in ocean, near-coastal, or Great Lakes service in the following manner:

(1) Chief engineer (limited) may serve on oceans and near-coastal waters.

(2) Assistant engineer (limited) may serve on ocean and near-coastal waters.

(c) Engineer licenses or MMC endorsements issued in the grades of designated duty engineer of steam, motor, and/or gas turbine-propelled vessels allow the holder to serve within stated propulsion power limitations on vessels of less than 500 GRT in the following manner:

(1) Designated duty engineers limited to vessels of less than 1,000 HP or 4,000 HP may serve only on near-coastal or inland waters.

(2) Designated duty engineers-unlimited may serve on any waters.

(d) An engineer officer's license or MMC endorsement authorizes service on steam, motor, or gas turbine-propelled vessels or may authorize all modes of propulsion.

(e) A person holding an engineer license or MMC endorsement that is restricted to near-coastal waters may

serve within the limitations of the license or MMC upon near-coastal, Great Lakes, and inland waters.

§ 11.502 General requirements for national engineer endorsements.

(a) For all original and raise of grade of engineer endorsements, at least one-third of the minimum service requirements must have been obtained on the particular mode of propulsion for which the applicant seeks endorsement.

(b) If an applicant desires to add a propulsion mode (steam, motor, or gas turbine) to his or her endorsement while holding a license or MMC officer endorsement in that grade, the following alternatives are acceptable:

(1) Four months of service as an observer on vessels of the new propulsion mode.

(2) Four months of service as an engineer officer at the operational level on vessels of the new propulsion mode.

(3) Six months of service as oiler, fireman/watertender, or junior engineer on vessels of the new propulsion mode.

(4) Completion of a Coast Guard-approved training course for this endorsement.

§ 11.503 Propulsion power limitations for national endorsements.

(a) Engineer endorsements of all grades and types may be subject to propulsion power limitations. Other than as provided in § 11.524 of this subpart for the designated duty engineer (DDE), the propulsion power limitation placed on a license or MMC endorsement is based on the applicant's qualifying experience considering the total shaft propulsion power of each vessel on which the applicant has served.

(b) When an applicant for an original or raise of grade of an engineer endorsement, other than a DDE, has not obtained at least 50 percent of the required experience on vessels of 4,000 HP/3,000 kW or more, a propulsion power limitation is placed on the MMC based on the applicant's qualifying experience. The endorsement is limited to the maximum propulsion power on which at least 25 percent of the required experience was obtained, or 150 percent of the maximum propulsion power on which at least 50 percent of the service was obtained, whichever is higher. Limitations are in multiples of 1,000 HP/750 kW, using the next higher figure when an intermediate horsepower is calculated. When the limitation as calculated equals or exceeds 10,000 HP/7,500 kW, an unlimited propulsion power endorsement is issued.

(c) The following service on vessels of 4,000 HP/3,000 kW or more will be considered qualifying for raising or removing the propulsion power limitations placed on an engineer endorsement:

(1) Six months of service in the highest-grade endorsed: Removal of all propulsion power limitations.

(2) Six months of service as an engineer officer in any capacity other than the highest grade for which the applicant is licensed or endorsed: Removal of all propulsion power limitations for the grade in which service is performed and raised to the next higher grade endorsement to the propulsion power of the vessel on which service was performed. The total cumulative service before and after issuance of the limited engineer endorsement may be considered in removing all propulsion power limitations.

(3) Twelve months of service as oiler or junior engineer while holding a license or MMC endorsement as third assistant engineer or assistant engineer (limited): Removal of all propulsion power limitations on third assistant engineer or assistant engineer's (limited) endorsement.

(4) Six months of service as oiler or junior engineer while holding a license or MMC endorsement as second assistant engineer: removal of all propulsion power limitations on third assistant engineer's endorsement.

(d) Raising or removing propulsion power limitations based on service required by paragraph (c) of this section may be granted without further written examination, if the Coast Guard considers further examination unnecessary.

§ 11.504 Application of deck service for national limited engineer endorsements.

Service gained in the deck department on vessels of appropriate tonnage may substitute for up to 25 percent or

6 months, whichever is less, of the service requirement for an endorsement as chief engineer (limited), assistant engineer (limited), or DDE.

§ 11.505 National engineer officer endorsements.

Figure 11.505(a) illustrates the national engineering endorsement structure, including crossover points.

Figure 11.505(a)—Structure of national engineer officer endorsements for non-seagoing service.

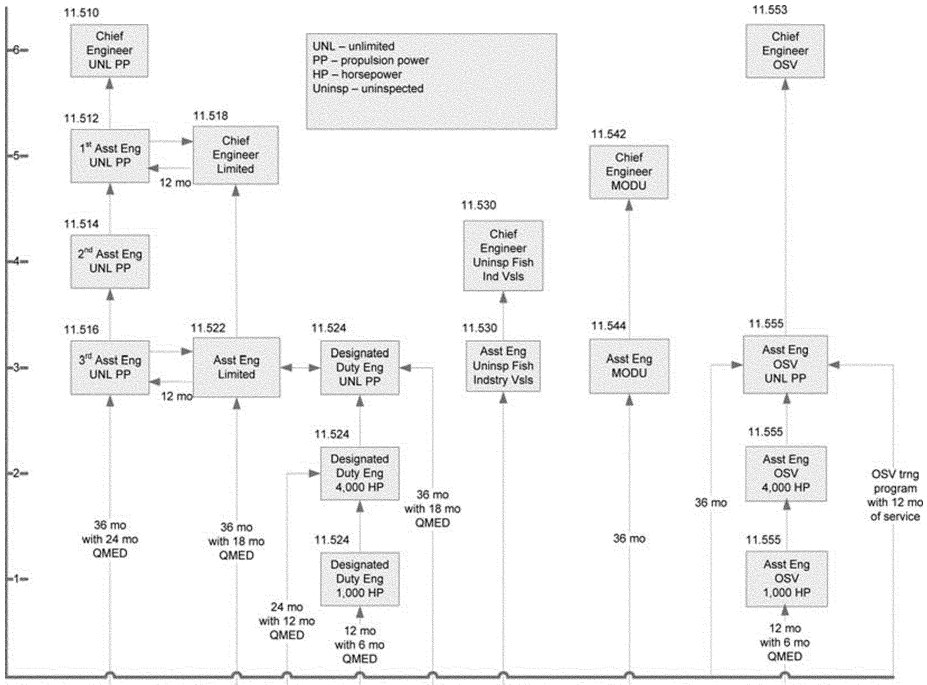

§ 11.510 Service requirements for national endorsement as chief engineer of steam, motor, and/or gas turbine-propelled vessels.

(a) The minimum service required to qualify an applicant for endorsement as chief engineer of steam, motor, and/or gas turbine-propelled vessels is—

(1) One year of service as first assistant engineer; or

(2) One year of service while holding a license or MMC endorsement as first assistant engineer. A minimum of 6 months of this service must have been as first assistant engineer, and the remainder must be as assistant engineer. Service as an assistant engineer other than first assistant engineer is accepted on a two-for-one basis to a maximum of 6 months (2 days of service as a second or third assistant engineer equals 1 day of creditable service).

(b) A person holding this endorsement may qualify for an STCW endorsement, according to §§ 11.325 and 11.331 of this part.

§ 11.512 Service requirements for national endorsement as first assistant engineer of steam, motor, and/or gas turbine-propelled vessels.

(a) The minimum service required to qualify an applicant for endorsement as first assistant engineer of steam,

motor, and/or gas turbine-propelled vessels is—

(1) One year of service as an assistant engineer while holding a license or MMC with a second assistant engineer endorsement; or

(2) One year of service as a chief engineer (limited) and completing the appropriate examination described in subpart I of this part.

(b) A person holding this endorsement may qualify for an STCW endorsement, according to §§ 11.327, 11.331, and 11.333 of this part.

§ 11.514 Service requirements for national endorsement as second assistant engineer of steam, motor, and/or gas turbine-propelled vessels.

(a) The minimum service required to qualify an applicant for endorsement as second assistant engineer of steam, motor, and/or gas turbine-propelled vessels is—

(1) One year of service as an assistant engineer, while holding a license or MMC endorsement as third assistant engineer; or

(2) One year of service while holding a license or MMC endorsement as third assistant engineer, which includes—

(i) A minimum of 6 months of service as third assistant engineer; and

(ii) Additional service as a qualified member of the engine department, calculated on a two-for-one basis.

(b) A person holding this endorsement may qualify for an STCW endorsement, according to §§ 11.327, 11.329, and 11.333 of this part.

§ 11.516 Service requirements for national endorsement as third assistant engineer of steam, motor, and/or gas turbine-propelled vessels.

(a) The minimum service required to qualify an applicant for endorsement as third assistant engineer of steam, motor, and/or gas turbine-propelled vessels is—

(1) Three years of service in the engineroom of vessels, 2 years of which must have been as a qualified member of the engine department or equivalent position;

(2) Three years of service as an apprentice to the machinist trade engaged in the construction or repair of marine, locomotive, or stationary engines, together with 1 year of service in the engineroom as oiler, fireman/watertender, or junior engineer;

(3) Graduation from—

(i) The U.S. Merchant Marine Academy (engineering curriculum);

(ii) The U.S. Coast Guard Academy and completion of an onboard engineer officer qualification program required by the service;

(iii) The U.S. Naval Academy and completion of an onboard engineer officer qualification program required by the service; or

(iv) The engineering class of a Maritime Academy approved by and conducted under the rules prescribed by the Maritime Administrator and listed in part 310 of this title;

(4) Graduation from the marine engineering course of a school of technology accredited by the Accreditation Board for Engineering and Technology, together with 3 months of service in the engine department of steam, motor, or gas turbine-propelled vessels;

(5) Graduation from the mechanical or electrical engineering course of a school of technology accredited by the ABET, together with 6 months of service in the engine department of steam, motor, or gas turbine-propelled vessels;

(6) Satisfactory completion of a comprehensive apprentice engineers training program approved by the Coast Guard; or

(7) One year of service as assistant engineer (limited) of self-propelled vessels and completion of the appropriate examination described in subpart I of this part.

(b) Experience gained in the deck department on vessels of 100 GRT or more can be credited for up to 3 months of the service requirements under paragraph (a)(1) of this section.

(c) A person holding this endorsement may qualify for an STCW endorsement, according to §§ 11.327, 11.329, and 11,333 of this part.

§ 11.518 Service requirements for national endorsement as chief engineer (limited) of steam, motor, and/or gas turbine-propelled vessels.

(a) The minimum service required to qualify an applicant for endorsement as chief engineer (limited) of steam, motor, and/or gas turbine-propelled vessels is 5 years of total service in the

engineroom of vessels. Two years of this service must have been as an engineer officer while holding an engineer officer endorsement. Thirty months of the service must have been as a qualified member of the engine department or equivalent position.

(b) A person holding this endorsement may qualify for an STCW endorsement, according to §§ 11.325 and 11.331 of this part.

§ 11.522 Service requirements for national endorsement as assistant engineer (limited) of steam, motor, and/or gas turbine-propelled vessels.

(a) The minimum service required to qualify an applicant for endorsement as assistant engineer (limited) of steam, motor, and/or gas turbine-propelled vessels is 3 years of service in the engineroom of vessels. Eighteen months of this service must have been as a qualified member of the engine department or equivalent position.

(b) A person holding this endorsement may qualify for an STCW endorsement, according to §§ 11.327, 11.329, and 11.333 of this part.

§ 11.524 Service requirements for national endorsement as designated duty engineer (DDE) of steam, motor, and/or gas turbine-propelled vessels.

(a) DDE endorsements are issued in three levels of propulsion power limitations dependent upon the total service of the applicant and completion of an appropriate examination. These endorsements are limited to vessels of less than 500 GRT on certain waters as specified in § 11.501 of this subpart.

(b) The service requirements for endorsements as DDE are—

(1) For designated duty engineer of steam, motor, and/or gas turbine-propelled vessels of unlimited propulsion power, the applicant must have 3 years of service in the engineroom. Eighteen months of this service must have been as a qualified member of the engine department or equivalent position;

(2) For designated duty engineer of steam, motor, and/or gas turbine-propelled vessels of less than 4,000 HP/3,000 kW, the applicant must have 2 years of service in the engineroom. One year of this service must have been as a qualified member of the engine department or equivalent position; and

(3) For designated duty engineer of steam, motor, and/or gas turbine-propelled vessels of less than 1,000 HP/750 kW, the applicant must have 1 year of service in the engineroom. Six months of this service must have been as a qualified member of the engine department or equivalent position.

(c) A person holding this endorsement may qualify for an STCW endorsement, according to §§ 11.325, 11.327, 11.329, and 11.331 of this part.

§ 11.530 Endorsements as engineers of uninspected fishing industry vessels.

(a) This section applies to endorsements for chief and assistant engineers of all vessels, however propelled, which are documented to engage in the fishing industry, with the exception of—

(1) Wooden ships of primitive build;

(2) Unrigged vessels; and

(3) Vessels of less than 200 GRT.

(b) Endorsements as chief engineer and assistant engineer of uninspected fishing industry vessels are issued for ocean waters and with propulsion power limitations in accordance with the provisions of § 11.503 of this subpart.

(c) For an endorsement as chief engineer, the applicant must have served 4 years in the engineroom of vessels. One year of this service must have been as an assistant engineer officer or equivalent position.

(d) For an endorsement as assistant engineer, an applicant must have served 3 years in the engine room of vessels.

(e) Two-thirds of the service required under this section must have been on motor vessels.

(f) Applicants may request an orally assisted examination on the subjects listed in subpart I of this part.

§ 11.540 Endorsements as engineers of mobile offshore drilling units (MODUs).

Endorsements as chief engineer (MODU) or assistant engineer (MODU) authorize service on certain self-propelled or non-self-propelled units of unlimited propulsion power where authorized by the vessel's certificate of inspection.

§ 11.542 Endorsement as chief engineer (MODU).

(a) To qualify for an endorsement as chief engineer (MODU) an applicant must—

(1) Present evidence of one of the following:

(i) Six years of employment assigned to MODUs, including 3 years of employment as mechanic, motorman, subsea engineer, electrician, barge engineer, toolpusher, unit superintendent, crane operator, or equivalent. Eighteen months of that employment must have been assigned to self-propelled or propulsion assisted units.

(ii) Two years of employment assigned to MODUs as an assistant engineer (MODU). Twelve months of that employment must have been assigned to self-propelled or propulsion assisted units; and

(2) Present evidence of completion of a firefighting training course as required by § 11.201(h) of this part.

(b) If an applicant successfully completes an examination and possesses the total required sea service for an endorsement as chief engineer (MODU), but does not possess the required sea service onboard self-propelled or propulsion assisted units, the Coast Guard may issue the applicant an endorsement limited to non-self-propelled units. The Coast Guard may remove the limitation upon presentation of satisfactory evidence of the required self-propelled sea service and completion of any additional required examination.

(c) A person holding this endorsement may qualify for an STCW endorsement, according to §§ 11.325, 11.327, and 11.331 of this part.

§ 11.544 Endorsement as assistant engineer (MODU).

(a) To qualify for an endorsement as assistant engineer (MODU) an applicant must—

(1) Present evidence of one of the following experience:

(i) Three years of employment assigned to MODUs including 18 months of employment as mechanic, motorman, subsea engineer, electrician, barge engineer, toolpusher, unit superintendent, crane operator, or equivalent. Nine months of that employment must have been assigned to self-propelled or propulsion assisted unit.

(ii) Three years of employment in the machinist trade engaged in the construction or repair of diesel engines and 1 year of employment assigned to MODUs in the capacity of mechanic, motorman, oiler, or equivalent. Nine months of that employment must have been assigned to self-propelled or propulsion assisted units.

(iii) A degree from a program in marine, mechanical, or electrical engineering technology that is accredited by the Accreditation Board for Engineering and Technology (ABET). The National Maritime Center will give consideration to accepting education credentials from programs having other than ABET accreditation. An applicant qualifying through a degree program must also have at least 6 months of employment in any of the capacities listed in paragraph (a)(1)(i) of this section aboard self-propelled or propulsion-assisted units; and

(2) Present evidence of completion of a firefighting training course as required by § 11.201(h) of this part.

(b) If an applicant successfully completes an examination and possesses the total required sea service for an endorsement as an assistant engineer (MODU), but does not possess the required sea service onboard self-propelled or propulsion assisted units, the Coast Guard may issue the applicant an endorsement limited to non-self-propelled units. The Coast Guard may remove the limitation upon presentation of the satisfactory evidence of the required self-propelled sea service and completion of any additional required examination.

(c) A person holding this endorsement may qualify for an STCW endorsement, according to §§ 11.329 and 11.333 of this part.

§ 11.551 Endorsements for service on offshore supply vessels.

Each endorsement for service on OSVs as chief engineer (OSV) or engineer (OSV) authorizes service on OSVs as defined in 46 U.S.C. 2101(19) and as interpreted under 46 U.S.C. 14104(b), subject to any restrictions placed on the MMC.

§ 11.553 Chief engineer (OSV).

(a) The minimum service required to qualify an applicant for an endorsement as chief engineer (OSV) is 4 years of total service in the engineroom of vessels. One year of this service must have been as an engineer officer while holding an engineer officer endorsement. Two years of the service must have been as a qualified member of the engine department or equivalent position.

(b) If an applicant has not obtained at least 50 percent of the required experience on vessels of 4,000 HP/3,000 kW or more, a propulsion power limitation is placed on the MMC based on the applicant's qualifying experience. The endorsement is limited to the maximum propulsion power on which at least 25 percent of the required experience was obtained, or 150 percent of the maximum propulsion power on which at least 50 percent of the service was obtained, whichever is higher. Limitations are in multiples of 1,000 HP/750 kW, using the next higher figure when an intermediate propulsion power is calculated. When the limitation as calculated equals or exceeds 10,000 HP/7,500 kW, an unlimited propulsion power endorsement is issued.

(c) A person holding an endorsement as chief engineer (OSV) may qualify for an STCW endorsement, according to §§ 11.325, 11.327, and 11.331 of this part.

(d) The Coast Guard may exempt an applicant from meeting any requirement under STCW Regulation III/2 (incorporated by reference, see § 11.102 of this part) that the Coast Guard determines to be inappropriate or unnecessary for service on an OSV, or that the applicant meets under the equivalency provisions of Article IX of STCW.

§ 11.555 Assistant engineer (OSV).

(a) The minimum service required to qualify an applicant for an endorsement as assistant engineer (OSV) of unlimited propulsion power is—

(1) Three years of service in the engineroom. Eighteen months of this service must have been as a qualified member of the engine department (QMED) or equivalent position; or

(2) One year of total service as part of an approved or accepted assistant engineer (OSV) training program.

(b) The minimum service required to qualify an applicant for an endorsement as assistant engineer (OSV) of less than 4,000 HP/3,000 kW, is 2 years of service in the engineroom. One year of this service must have been as a QMED or equivalent position.

(c) The minimum service required to qualify an applicant for an endorsement as assistant engineer (OSV) of less than 1,000 HP/750 kW is 1 year of service in the engineroom. Six months of this service must have been as a QMED or equivalent position.

(d) A person holding an endorsement as assistant engineer (OSV) may qualify for an STCW endorsement, according to §§ 11.329 and 11.333 of this part.

(e) The Coast Guard may exempt an applicant from meeting any requirement under STCW Regulation III/1 (incorporated by reference, see § 11.102 of this part) that the Coast Guard determines to be inappropriate or unnecessary for service on an OSV, or that the applicant meets under the equivalency provisions of Article IX of STCW.

[USCG–2004–17914, 78 FR 77909, Dec. 24, 2013, as amended by USCG–2014–0688, 79 FR 58277, Sept. 29, 2014]

Subpart F—Credentialing of Radio Officers

§ 11.601 Applicability.

This subpart provides for endorsement as radio officers for employment on vessels, and for the issue of STCW endorsements for those qualified to serve as radio operators on vessels subject to the provisions on the Global Maritime Distress and Safety System (GMDSS) of Chapter IV of SOLAS (incorporated by reference, see § 11.102 of this part).

§ 11.603 Requirements for radio officers' endorsements.

Each applicant for an original endorsement or renewal of license must present a current first or second class radiotelegraph operator license issued by the Federal Communications Commission. The applicant must enter on the endorsement application form the number, class, and date of issuance of his or her Federal Communications Commission license.

§ 11.604 Requirements for an STCW endorsement for Global Maritime Distress and Safety System (GMDSS) radio operators.

Each applicant for an original endorsement must present a certificate of completion from a Coast Guard-approved course for operator of radio in the GMDSS meeting the requirements of Section A–IV/2 of the STCW Code (incorporated by reference, see § 11.102 of this part).

Subpart G—Professional Requirements for Pilots

§ 11.701 Scope of pilot endorsements.

(a) An applicant for an endorsement as first-class pilot need not hold any other officer endorsement issued under this part.

(b) The issuance of an endorsement as first-class pilot to an individual qualifies that individual to serve as pilot over the routes specified on the endorsement, subject to any limitations imposed under paragraph (c) of this section.

(c) The OCMI issuing an endorsement as first-class pilot imposes appropriate limitations commensurate with the experience of the applicant, with respect to class or type of vessel, tonnage, route, and waters.

(d) A license or MMC endorsement issued for service as a master, mate, or operator of uninspected towing vessels authorizes service as a pilot under the provisions of § 15.812 of this subchapter. Therefore, first-class pilot endorsements will not be issued with tonnage limitations of 1,600 GRT or less.

§ 11.703 Service requirements.

(a) The minimum service required to qualify an applicant for an endorsement as first-class pilot is predicated upon the nature of the waters for which pilotage is desired.

(1) *General routes (routes not restricted to rivers, canals and small lakes.* The applicant must have at least 36 months of service in the deck department of self-propelled vessels navigating on oceans, coastwise, and Great Lakes, or bays, sounds, and lakes other than the Great Lakes, as follows:

(i) Eighteen months of the 36 months of service must be performing bridge watchkeeping duties under the supervision of the master or a qualified officer.

(ii) At least 12 months of the 18 months of service required in paragraph (a)(1)(i) of this section must be on vessels operating on the class of waters for which pilotage is desired.

(2) *River routes.* The applicant must have at least 36 months of service in the deck department of any vessel including at least 12 months of service on vessels operating on the waters of rivers while the applicant is performing bridge watchkeeping duties under the supervision of the master or a qualified officer.

(3) *Canal and small lakes routes.* The applicant must have at least 24 months of service in the deck department of any vessel including at least 8 months of service on vessels operating on canals or small lakes.

(b) A graduate of the Great Lakes Maritime Academy in the deck class meets the service requirements of this section for an endorsement as first-class pilot on the Great Lakes.

(c) Completion of an approved or accepted pilot training course may be substituted for a portion of the service requirements of this section in accordance with § 10.404 of this subchapter. Additionally, roundtrips made during this training may apply toward the route familiarization requirements of § 11.705 of this subpart. An individual using substituted service must have at least 9 months of shipboard service.

(d) An individual holding a license or MMC endorsement as master or mate of inspected self-propelled vessels of more than 1,600 GRT meets the service requirements of this section for an endorsement as first-class pilot.

§ 11.705 Route familiarization requirements.

(a) The Officer in Charge, Marine Inspection (OCMI) has jurisdiction and determines within the range limitations specified in this section, the number of roundtrips required to qualify an applicant for a particular route, considering the following:

(1) The geographic configuration of the waterway.

(2) The type and size of vessels using the waterway.

(3) The abundance or absence of aids to navigation.

(4) The background lighting effects.

(5) The known hazards involved, including waterway obstructions or constrictions such as bridges, narrow channels, or sharp turns.

(6) Any other factors unique to the route that the OCMI deems appropriate.

(b) An applicant holding no other deck officer endorsement seeking an endorsement as first-class pilot must furnish evidence of having completed a minimum number of roundtrips, while serving as quartermaster, wheelsman, able seaman, apprentice pilot, or in an equivalent capacity, standing regular watches at the wheel or in the pilot house as part of routine duties, over the route sought. Evidence of having completed a minimum number of roundtrips while serving as an observer, properly certified by the master and/or pilot of the vessel, is also acceptable. The range of roundtrips for an endorsement is a minimum of 12 roundtrips and a maximum of 20 roundtrips. An applicant may have additional routes added to the first-class pilot endorsement by meeting the requirements in paragraph (c) of this section.

(c) An applicant who currently holds a deck officer license or MMC endorsement seeking an endorsement as first-class pilot for a particular route must furnish evidence of having completed the number of roundtrips over the route, specified by the OCMI, within the range limitations of this paragraph, for the particular grade of existing license or MMC endorsement held. The range of roundtrips for an endorsement is a minimum of eight roundtrips and a maximum of 15 roundtrips.

(d) Unless determined impracticable by the OCMI, 25 percent of the roundtrips required by the OCMI under this section must be made during the hours of darkness.

(e) One of the roundtrips required by the OCMI under this section must be made over the route within the 6 months immediately preceding the date of application.

[USCG–2004–17914, 78 FR 77909, Dec. 24, 2013, as amended by USCG–2004–17914, 79 FR 55657, Sept. 17, 2014]

§ 11.707 Examination requirements.

(a) An applicant for an endorsement as first-class pilot, except as noted in paragraph (b) of this section, is required to pass the examination described in subpart I of this part.

(b) An applicant for an extension of route, or an applicant holding a license or MMC endorsement as master or mate authorized to serve on vessels of more than 1,600 GRT seeking an endorsement as first-class pilot, is required to pass those portions of the examination described in subpart I of this part that concern the specific route for which endorsement is sought.

§ 11.709 Annual physical examination requirements.

(a) This section applies only to an individual who pilots a vessel of 1,600 GRT or more.

(b) Every person holding a license or MMC endorsement as first-class pilot must have a thorough physical examination each year, to be completed by the first day of the month following the anniversary of the individual's most recently completed Coast Guard-required physical examination. Every other year, in accordance with the medical certificate requirements in § 10.301(b) of this subchapter, the results of the physical examination must be recorded on a CG–719K form and submitted to the Coast Guard no later than 30 calendar days after completion of the physical examination.

(c) Each annual physical examination must meet the requirements specified in 46 CFR, part 10, subpart C and be recorded on a CG–719–K.

(d) An individual's first-class pilot endorsement becomes invalid on the first day of the month following the anniversary of the individual's most recently completed Coast Guard-required physical examination, if the person does not meet the physical examination requirement as provided in paragraph (b) of this section. The individual may not operate under the authority of that endorsement until a physical examination has been satisfactorily completed.

§ 11.711 Tonnage requirements.

(a) In order to obtain a first-class pilot endorsement authorizing service

on vessels of unlimited tonnage over a particular route, the applicant must have sufficient experience on vessels of more than 1,600 GRT.

(b) For purposes of this section, an applicant is considered to have sufficient experience if the applicant has 18 months of experience as master, mate, quartermaster, wheelsman, able seaman, apprentice pilot, or in an equivalent capacity, standing regular watches at the wheel or in the pilothouse as part of routine duties, on vessels of 1,600 GRT or more, and two-thirds of the minimum number of roundtrips required for the route have been on vessels of 1,600 GRT or more.

(c) If an applicant does not have sufficient experience on vessels of 1,600 GRT/3,000 GT or more, the endorsement will be for a limited tonnage until the applicant completes a number of additional roundtrips, as determined by the OCMI, within the range contained in § 11.705(b) or (c) of this subpart, as appropriate on vessels of 1,600 GRT/3,000 GT or more.

(d) For purposes of this section, for experience with respect to tonnage on towing vessels, the combined gross tonnage of the towing vessels and the vessels towed will be considered. However, the Coast Guard may require that all or a portion of the required number of roundtrips be obtained on self-propelled vessels of 1,600 GRT or more, when the Coast Guard determines that due to the nature of the waters and the overall experience of the applicant, self-propelled vessel experience is necessary to obtain a first-class pilot endorsement that is not restricted to tug and barge combinations.

[USCG–2004–17914, 78 FR 77909, Dec. 24, 2013, as amended by USCG–2004–17914, 79 FR 55657, Sept. 17, 2014]

§ 11.713 Requirements for maintaining current knowledge of waters to be navigated.

(a) If a first-class pilot has not served over a particular route within the past 60 months, that person's license or MMC endorsement is invalid for that route, and remains invalid until the individual has made one re-familiarization round trip over that route, except as provided in paragraph (b) of this section. Whether this requirement is satisfied or not has no effect on the renewal of other licenses or MMC endorsements. Roundtrips made within the 90-day period preceding renewal will be valid for the duration of the renewed license or MMC endorsement.

(b) For certain long or extended routes, the OCMI may, at his or her discretion, allow the re-familiarization requirement to be satisfied by reviewing appropriate navigation charts, coast pilots tide and current tables, local Notice to Mariners, and any other materials that would provide the pilot with current knowledge of the route. Persons using this method of re-familiarization must certify, when applying for renewal of their license or MMC endorsement, the material they have reviewed and the dates on which this was accomplished. Review within the 90-day period preceding renewal is valid for the duration of the renewed MMC endorsement.

Subpart H—Registration of Staff Officers and Miscellaneous Endorsements

§ 11.801 Applicability.

This subpart provides for the registration of staff officers for employment on vessels documented or numbered under the laws of the United States. Staff officers must be registered if serving on most vessels in ocean service or on the Great Lakes.

§ 11.803 Staff departments.

(a) Title 46 U.S.C. 8302 contains the requirements for staff departments on U.S. flag vessels.

(b) Title 46 U.S.C. 8302 does not apply to—

(1) A fishing or whaling vessel or yacht;

(2) A vessel operated only on bays, sounds, inland waters, and lakes (other than the Great Lakes); and

(3) A vessel ferrying passengers and cars on the Great Lakes.

§ 11.805 General requirements.

(a) The applicant for an endorsement as staff officer is not required to take any examination; however, the applicant must present to the Coast Guard a

letter justifying the need for the endorsement.

(b) An applicant for a higher grade in the staff department must apply in the same manner as for an original endorsement and must surrender the previous Coast Guard-issued credentials upon issuance of the new MMC. A staff officer may serve in a lower grade of service for which he or she is registered.

(c) Title 46 U.S.C. 8302 addresses uniforms for staff officers who are members of the Naval Reserve.

(d) A duplicate MMC may be issued by the Coast Guard. (See § 10.229 of this subchapter.)

(e) An MMC is valid for a term of 5 years from the date of issuance. Procedures for renewing endorsements are found in § 10.227 of this subchapter.

(f) Each applicant for an original or a higher grade of endorsement, as described in paragraph (b) of this section, must produce evidence of having passed a chemical test for dangerous drugs or of qualifying for an exception from testing in § 16.220 of this subchapter. An applicant who fails a chemical test for dangerous drugs will not be issued an MMC.

§ 11.807 Experience requirements for registry.

(a) The applicant for a certificate of registry as staff officer must submit evidence of experience as follows:

(1) *Chief purser*. Two years of service aboard vessels performing duties relating to work in the purser's office.

(2) *Purser*. One year of service aboard vessels performing duties relating to work in the purser's office.

(3) *Senior assistant purser*. Six months of service aboard vessels performing duties relating to work in the purser's office.

(4) *Junior assistant purser*. Previous experience not required.

(5) *Medical doctor*. A valid license as physician or surgeon issued under the authority of a state or territory of the United States, the Commonwealth of Puerto Rico, or the District of Columbia.

(6) *Professional nurse*. A valid license as a registered nurse issued under authority of a state or territory of the United States, the Commonwealth of Puerto Rico, or the District of Columbia.

(7) *Marine physician assistant*. Successful completion of an accredited course of instruction for a physician's assistant or nurse practitioner program.

(8) *Hospital corpsman*. A rating of at least hospital corpsman or health services technician, first class in the U.S. Navy, U.S. Coast Guard, U.S. Marine Corps, or an equivalent rating in the U.S. Army (not less than Staff Sergeant, Medical Department, U.S.A.), or in the U.S. Air Force (not less than Technical Sergeant, Medical Department, U.S.A.F.), and a period of satisfactory service of at least 1 month in a military hospital or U.S. Public Health Service Hospital.

(b) Employment on shore in connection with a vessel's business may be accepted instead of service aboard vessels. Related shore employment is accepted in the ratio of 2 months of shore service to 1 month of creditable service aboard vessels.

(c) In computing the length of service required of an applicant for an endorsement, service of one season on vessels on the Great Lakes is counted as service of 1 year.

(d) In the event an applicant for an endorsement, other than medical doctor or professional nurse, presents evidence of other qualifications that, in the opinion of the Coast Guard, is equivalent to the experience requirements of this section and is consistent with the duties of a staff officer, the Coast Guard may issue the MMC.

§ 11.821 High-speed craft type-rating.

(a) This section is only applicable to those persons who will be serving or have served upon those vessels built and operated in accordance with the International Code of Safety for High Speed Craft (HSC Code).

(b) To qualify for a high-speed craft type-rating endorsement (TRE) for operating vessels to which the HSC Code applies, an applicant must—

(1) Hold a valid officer endorsement for vessels of commensurate grade, tonnage, route, and/or horsepower; and

(2) Present evidence of successful completion of a Coast Guard-approved type rating training program.

(c) A separate TRE will be issued for each type and class of high speed craft. The original route will be as specified in the approved type rating program. Additional routes may be added to an existing TRE by completing at least 12 roundtrips over each route under the supervision of a type-rated master on the class of high speed craft the TRE will be valid for. Six of the trips must be made during the hours of darkness or a ''daylight only'' restriction will be imposed.

(d) A TRE will be valid for 2 years. The expiration date of a TRE will not be changed due to the addition of additional routes.

(e) To renew a TRE, an applicant must provide evidence of—

(1) At least 6 months of service in the appropriate position on the type crafts to which the TRE applies during the preceding 2 years, including at least 12 roundtrips over each route, together with evidence of a completed revalidation assessment; or

(2) Completion of an approved revalidation training program.

[USCG–2004–17914, 78 FR 77909, Dec. 24, 2013, as amended by USCG–2014–0688, 79 FR 58277, Sept. 29, 2014]

Subpart I—Subjects of Examinations

§ 11.901 General provisions.

(a) Where required by § 11.903 of this subpart, each applicant for an endorsement listed in that section must pass an examination on the appropriate subjects listed in this subpart.

(b) If the endorsement is to be limited in a manner that would render any of the subject matter unnecessary or inappropriate, the examination may be amended accordingly by the Coast Guard. Limitations that may affect the examination content are as follows:

(1) Restricted routes for reduced service officer endorsements (master or mate of vessels of less than 200 GRT, OUPV, or master or mate (pilot) of towing vessels).

(2) Limitations to a certain class or classes of vessels.

(c) Simulators used in assessments of competence required by subpart C of this part must meet the appropriate performance standards set out in Section A–I/12 of the STCW Code (incorporated by reference, see § 11.102 of this part). However, simulators installed or brought into use before February 1, 2002, need not meet these performance standards if they fulfill the objective of the assessment of competence or demonstration of proficiency.

§ 11.903 Officer endorsements requiring examinations.

(a) The following officer endorsements require examinations for issuance:

(1) Chief mate of ocean or near-coastal self-propelled vessels of unlimited tonnage (examined at the management level).

(2) Third mate of ocean or near-coastal self-propelled vessels of unlimited tonnage (examined at the operational level).

(3) Master of ocean or near-coastal self-propelled vessels of less than 1,600 GRT.

(4) Mate of ocean or near-coastal self-propelled vessels of less than 1,600 GRT.

(5) Master of near-coastal vessels less than 200 GRT.

(6) Mate of near-coastal vessels less than 200 GRT.

(7) Master of near-coastal vessels less than 100 GRT.

(8) Mate of near-coastal vessels less than 100 GRT.

(9) Master of Great Lakes and inland vessels of unlimited tonnage.

(10) Mate of Great Lakes and inland vessels of unlimited tonnage.

(11) Master of inland vessels of unlimited tonnage.

(12) Master of river vessels of unlimited tonnage.

(13) Master of Great Lakes and inland/river vessels less than 500 GRT or less than 1,600 GRT.

(14) Mate of Great Lakes and inland/river vessels less than 500 GRT or less than 1,600 GRT.

(15) Master of Great Lakes and inland/river vessels less than 200 GRT.

(16) Mate of Great Lakes and inland/river vessels less than 200 GRT.

(17) Master of Great Lakes and inland/river vessels less than 100 GRT.

(18) First-class pilot.

(19) Apprentice mate (steersman) of towing vessels.

(20) Apprentice mate (steersman) of towing vessels, limited.
(21) Offshore Installation Manager.
(22) Barge Supervisor.
(23) Ballast Control Operator.
(24) Operator of uninspected passenger vessels.
(25) Master of uninspected fishing industry vessels.
(26) Mate of uninspected fishing industry vessels.
(27) Master (OSV).
(28) Chief mate (OSV).
(29) Mate (OSV).
(30) First assistant engineer (limited or unlimited propulsion power).
(31) Third assistant engineer (limited or unlimited propulsion power).
(32) Chief engineer (limited) steam/motor vessels.
(33) Assistant engineer (limited) steam/motor vessels.
(34) Designated duty engineer steam/motor vessels.
(35) Chief engineer (uninspected fishing industry vessels).
(36) Assistant engineer (uninspected fishing industry vessels).
(37) Chief engineer (MODU).
(38) Assistant engineer (MODU).
(39) Chief engineer (OSV).
(40) Assistant engineer (OSV).

(b) In paragraphs (a)(1) through (4), and (a)(6), (7), (15), and (16) of this section, examinations will vary depending on route desired.

(c) The following officer endorsements do not require examinations:

(1) Master of oceans or near-coastal vessels of unlimited tonnage when upgrading from MMC officer endorsements, or a license as chief mate of oceans or near-coastal vessels of unlimited tonnage, provided the applicant has already been examined at the management level.

(2) Master of oceans or near-coastal vessels of unlimited tonnage when adding an endorsement as offshore installation manager (OIM).

(3) Master of oceans or near-coastal self-propelled vessels of less than 200 GRT, when upgrading from mate of near-coastal self-propelled vessels of less than 200 GRT. Master of oceans self-propelled vessels of less than 200 GRT would, however, require an examination in celestial navigation.

(4) Second mate of oceans or near-coastal vessels when upgrading from third mate of oceans or near-coastal vessels, provided the applicant has already been examined at the operational level.

(5) Master of Great Lakes and inland vessels, or river vessels of less than 200 GRT when upgrading from mate of less than 200 GRT on the same route.

(6) Chief engineer unlimited, provided the applicant has already been examined at the management level.

(7) Chief engineer limited to service on steam, motor, or gas turbine-propelled vessels of less than 10,000 HP/7,500 kW on near-coastal routes, provided the applicant has already been examined at the management level.

(8) Chief engineer limited to service on steam, motor, and/or gas turbine-propelled vessels of less than 4,000 HP/3,000 kW on near-coastal routes, provided the applicant has already been examined at the management level.

(9) Second assistant engineer when upgrading from third assistant engineer, provided the applicant has already been examined at the operational level.

[USCG–2004–17914, 78 FR 77909, Dec. 24, 2013, as amended by USCG–2014–0688, 79 FR 58277, Sept. 29, 2014]

§ 11.910 Subjects for deck officer endorsements.

Table 1 to § 11.910 gives the codes used in Table 2 to § 11.910 for all deck officers. Table 2 to § 11.910 indicates the examination subjects for each endorsement, by code number. Figures in the body of Table 2 to § 11.910, in place of the letter ''x'', refer to notes.

TABLE 1 TO § 11.910—CODES FOR DECK OFFICER ENDORSEMENTS

Deck Officer Endorsements
1. Master/chief mate, oceans/near-coastal, unlimited tonnage.
2. Master, oceans/near-coastal, less than 500 GRT and less than 1,600 GRT.
3. Second mate/third mate, oceans/near-coastal, unlimited tonnage, and mate less than 500 GRT and less than 1600 GRT, oceans/near-coastal.

TABLE 1 TO § 11.910—CODES FOR DECK OFFICER ENDORSEMENTS—Continued

4. Master, oceans/near-coastal, and mate, near-coastal, less than 200 GRT (includes master, near-coastal, less than 100 GRT).
5. Operator, uninspected passenger vessels, near-coastal.
6. Operator, uninspected passenger vessels, Great Lakes/inland.
7. Apprentice mate, towing vessels, ocean (domestic trade) and near-coastal routes.
8. Apprentice mate (steersman), towing vessels, Great Lakes, and inland routes.
9. Steersman, towing vessels, Western Rivers.
10. Master, Great Lakes/inland, or master, inland, unlimited tonnage.
11. Mate, Great Lakes/inland, unlimited tonnage.
12. Master, Great Lakes/inland, less than 500 GRT and less than 1,600 GRT.
13. Mate, Great Lakes/inland, less than 500 GRT and less than 1,600 GRT.
14. Master or mate, Great Lakes/inland, less than 200 GRT (includes master, Great Lakes/inland, less than 100 GRT).
15. Master, rivers, unlimited tonnage.
16. Master, rivers, less than 500 GRT and less than 1,600 GRT.
17. Mate, rivers, less than 500 GRT and less than 1,600 GRT.
18. Master or mate, rivers, less than 200 GRT (includes master, rivers, less than 100 GRT).
19. Master, uninspected fishing industry vessels, oceans/near-coastal.
20. Mate, uninspected fishing industry vessels, oceans/near-coastal.
21. First-class pilot.
22. Master (OSV).
23. Chief mate (OSV).
24. Mate (OSV).

Table 2 to § 11.910 --_Subjects For Deck Officer Endorsements

Examination topics	1	2	3	4	5	6	7	8	9	10	11	12	13	14	15	16	17	18	19	20	21	22	23	24
Navigation and position determination:																								
Ocean Track Plotting:																								
Middle Latitude Sailing	1	1	1																1	1		1	1	1
Mercator Sailing	X	X	X	7															X	X		X	X	X
Great Circle Sailing	1	1	1	7															1	1		1	1	1
Parallel Sailing	1	1	1																1	1		1	1	1
Estimated Time of Arrival	X	X	X				1												X	1	1	X	X	1
Piloting:																								
Distance Off	X	X	X	X	X	X	X	X		X	X	X	X	X					X	X	X	X	X	X
Bearing Problems	X	X	X	X	X	X	X	X		X	X	X	X	X					X	X	X	X	X	X
Fix or Running Fix	X	X	X	X	X	X	X	X		X	X	X	X	X					X	X	X	X	X	X
Chart Navigation	X	X	X	X	X	X	X	X	2	X	X	X	X	X	2	2	2	2	X	X	X	X	X	X
Dead Reckoning	X	X	X	X	X	X	X	X		X	X	X	X	X					X	X	X	X	X	X
Celestial Observations:																								
Latitude by Polaris	1	1	1	1															1	1		1	1	1
Latitude by Meridian Transit (Any Body)	1	1																	1			1	1	
Latitude by Meridian Transit (Sun Only)			1	1			1													1				1
Fix or Running Fix (Any Body)	1	1	1																1			1	1	1
Fix or Running Fix (Sun Only)				1			1													1				
Star Identification	1	1	1				1												1			1	1	1
Star Selection	1	1	1				1												1			1	1	1
Times of Celestial Phenomena:																								
Time of Meridian Transit (Any Body)	1	1																	1			1	1	
Time of Meridian Transit (Sun Only)			1	1			1													1				1
Zone Time of Sun Rise/Set/Twilight	1	1	1	1			1												1	1		1	1	1
Speed by RPM	X	X	X							3									X	X		X	X	X
Fuel Conservation	X	X		1			1			3									X			X	X	

Examination topics	1	2	3	4	5	6	7	8	9	10	11	12	13	14	15	16	17	18	19	20	21	22	23	24
Electronic Navigation	X	X	X	X	X	X	X	X		X	X	X	X	X					X	X	X	X	X	X
Instruments & Accessories	X	X	X	X	X	X	X	X	X	X	X	X	X	X	X	X	X	X	X	X	X	X	X	X
Aids to Navigation	X	X	X	X	X	X	X	X	X	X	X	X	X	X	X	X	X	X	X	X	X	X	X	X
Charts, Navigation Publication, & Notices to Mariners	X	X	X	X	X	X	X	X	X	X	X	X	X	X	X	X	X	X	X	X	X	X	X	X
Nautical Astronomy & Navigation Definitions	1	1	1	1			1												1	1		1	1	1
Chart Sketch																					4			
Seamanship:																								
Marlinspike Seamanship			X	X	X	X	X	X	X		X		X	X	X	X	X	X	X	X	X			X
Purchases, Blocks, & Tackle			X	X			X	X	X		X		X	X	X	X	X	X	X	X	X			X
Watchkeeping:																								
COLREGS	X	X	X	X	X	5	X	5		5	5	5	5	5					X	X	5	X	X	X
Inland Navigational Rules	X	X	X	X	X	X	X	X	X	X	X	X	X	X	X	X	X	X	X	X	X	X	X	X
Basic Principles, Watchkeeping	X	X	X	X	X	X	X	X	X	X	X	X	X	X	X	X	X	X	X	X	X	X	X	X
Navigation Safety Regulations (33 CFR 164)	X		X				X	X	X	X	X				X				6	6	6	6	6	6
Compass - Magnetic & Gyro:																								
Principles, Operation, and Maintenance of Gyro Compass	X	X	X	7			1			X	X	X	X	7	X				X	X		X	X	X
Principles of Magnetic Compass	X	X	X	X	X	3	X	3	X	X	X	X	X	X	X	X	X	X	X	X	X	X	X	X
Gyro Compass Error/Correction	X	X	X	7			1	X		X	X	X	X	7	X				X	X	X	X	X	X
Magnetic Compass Error/Correction	X	X	X	X	X	3	X	3	X	X	X	X	X	X	X	X	X	X	X	X	X	X	X	X
Determination of Compass Error:																								
Azimuth (Any Body)	X	X	X	7			X															X	X	X
Azimuth (Sun Only)										3									1	1				
Amplitude (Any Body)	X	X	X	7			X															X	X	X
Amplitude (Sun Only)										3									1	1				
Terrestrial Observation	X	X	X	X	X	X	X	X		X	X	X	X	X					X	X	X	X	X	X

Examination topics	1	2	3	4	5	6	7	8	9	10	11	12	13	14	15	16	17	18	19	20	21	22	23	24
Meteorology and Oceanography:																								
Characteristics of Weather Systems	X	X	X	X	X	X	X	X	X	X	X	X	X	X	X	X	X	X	X	X		X	X	X
Ocean Current Systems	X	X	X	X			X												X	X		X	X	
Weather Charts and Reports	X	X	X	X	X	X	X	X		X	X	X	X	X					X	X		X	X	X
Tides and Tidal Currents:																								
Terms and Definitions	X	X	X	X	X	X	X	X		X	X	X	X	X					X	X	X	X	X	X
Publications	X	X	X	X	X	X	X	X		X	X	X	X	X					X	X	X	X	X	X
Calculations	X	X	X	X	X	X	X	X		X	X	X	X	X					X	X	X	X	X	X
Vessel Maneuvering and Handling:																								
Approaching Pilot Vessel or Station	X	X																			X			
Vessel Handling in Rivers & Estuaries	X	X		X	X	X	X	X	X	X	X	X	X	X	X	X	X	X	X		X	X	X	
Maneuvering in Shallow Water	X	X		X	X	X	X	X	X	X	X	X	X	X	X	X	X	X	X		X	X	X	
Interaction with Bank/Passing Ship	X	X		X	X	X	X	X	X	X	X	X	X	X	X	X	X	X	X		X	X	X	
Berthing and Unberthing	X	X		X	X	X	X			X	X	X		X	X	X		X	X		X	X	X	
Anchoring and Mooring	X	X	X	X	X	X	X			X	X	X	X	X					X	X	X	X	X	X
Dragging of, Clearing Fouled Anchors	X	X	X	X						X	X	X	X	X					X	X		X	X	X
Heavy Weather Operations	X	X	X	X	X	X	X	X		3	3	3	3	3					X	X		X	X	X
Maneuvering for Launching of Lifeboats and Liferafts in Heavy Weather	X	X		X			X	X		3		3		3					X			X	X	
Receiving Survivors From Lifeboats/Liferafts	X	X		X			X	X														X	X	
General: Turn Circle, Pivot Point, Advance and Transfer			X	X	X	X	X	X	X	X	X	X	X	X	X	X	X	X	X	X	X			X

Examination topics	1	2	3	4	5	6	7	8	9	10	11	12	13	14	15	16	17	18	19	20	21	22	23	24
Determine Maneuvering Characteristics of Major Vessel Types	X	X								3												X	X	
Wake Reduction	X	X	X	X	X	X	X	X	X	X	X	X	X	X	X	X	X	X	X	X	X	X	X	X
Ice Operations/Ice Navigation	X	X	X				X	X	X	X	3	X	3						X	X		X	X	X
Towing Vessel Operations							X	X	X															
Stability, Construction, and Damage Control:																								
Principles of Vessel Construction	X	X	X	X			X	3	X	X	3	X	3	X	X	X						X	X	X
Trim and Stability	X	X	X	X			X	X	X	X	3	X	3	X	X	X		X	X	X		X	X	X
Damage Trim and Stability	X	X																				X	X	
Stability, Trim, and Stress Calculation	X	X	X																			X	X	
Vessel Structural Members	X	X	X	7							X	X	3	7								X	X	X
IMO Ship Stability Recommendations	X	X																				X	X	
Damage Control	X	X	X	7			X	X		X	X	X	X	7	X	X	X	7	X	X		X	X	X
Change in Draft Due to Density	X																							
Vessel Power Plants:																								
Marine Power Plant Operating Principles	X	X		7			X	X	X	X		X		7	X	X			X			X	X	
Vessel's Auxiliary Machinery	X	X								X		X			X	X						X	X	
Marine Engineering Terms	X	X	X	7			X	X	X	X	X	X	X	7	X	X	X	7	X	X		X	X	X
Small Engine Operations and Maintenance				X	X	X								X				X						
Cargo Handling and Stowage:																								
Cargo Stowage and Security, including Cargo Gear	X	X	X	7						X	X	X	X	7	X	X	X	7	X	X		X	X	X
Loading and Discharging Operations	X	X	X							X	X	X	X		X	X	X		X	X		X	X	X
International Regulations for Cargoes, especially	X	X																				X	X	

Examination topics	1	2	3	4	5	6	7	8	9	10	11	12	13	14	15	16	17	18	19	20	21	22	23	24
International Maritime Dangerous Goods Code																								
Dangerous/Hazardous Cargo Regulations	X	X	X				X	X	X	X	X	X	X		X	X	X					X	X	X
Tank Vessel and Fuel Oil Operations	X	X	X	7						X	X	X	X	7	X	X	X	7	X	X		X	X	X
Cargo Piping and Pumping Systems																						X	X	X
Cargo Oil Terms and Definitions																						X	X	X
Barge Regulations (Operations)							X	X	X															
Fire Prevention and Firefighting Appliances:																								
Organization of Fire Drills	X	X	X	X			X	X	X	X	X	X	X	X	X	X	X	X	X	X		X	X	X
Classes and Chemistry of Fire	X	X	X	X	X	X	X	X	X	X	X	X	X	X	X	X	X	X	X	X		X	X	X
Firefighting Systems	X	X	X	X			X	X	X	X	X	X	X	X	X	X	X	X	X	X	X	X	X	X
Firefighting Equipment & Regulations	X	X	X	7			X	X	X	X	X	X	X	7	X	X	X	7	X	X	X	X	X	X
Firefighting Equipment & Regulations for T-Boats				9										9				9						
Basic Firefighting and Prevention	X	X	X	X	X	X	X	X	X	X	X	X	X	X	X	X	X	X	X	X	X	X	X	X
Emergency Procedures:																								
Ship Beaching Precautions	X	X								X		X							X			X	X	
Actions Prior to/after Grounding, Including Refloating	X	X								X		X			X	X			X			X	X	
Collision	X	X		X	X	X	X	X	X	X		X		X	X	X		X	X			X	X	
Temporary Repairs	X	X	X	X	X	X	X	X	X	X	X	X	X	X	X	X	X	X	X	X		X	X	X
Passenger/Crew Safety in Emergencies	X	X	X	X	X	X	X	X	X	X	X	X	X	X	X	X	X	X	X	X		X	X	X
Fire or Explosion	X	X	X	X	X	X	X	X	X	X	X	X	X	X	X	X	X	X	X	X		X	X	X
Abandon Ship Procedures	X	X	X	X	X	X	X	X	X	X	X	X	X	X	X	X	X	X	X	X		X	X	X
Emergency Steering	X	X	X	7			X	X	X	X	X	X	X	7	X	X	X	7	X	X		X	X	X

Examination topics	1	2	3	4	5	6	7	8	9	10	11	12	13	14	15	16	17	18	19	20	21	22	23	24
Rescuing Survivors from Ship/Aircraft in Distress	X	X	X	X			X	X	X	X	X	X	X	X	X	X	X	X	X	X		X	X	X
Man Overboard Procedures	X	X	X	X	X	X	X	X	X	X	X	X	X	X	X	X	X	X	X	X		X	X	X
Emergency Towing	X	X	X	X	X	X	X	X	X	X	X	X	X	X	X	X	X	X	X	X		X	X	X
Medical Care:																								
Knowledge and use of:																								
International Medical Guide for Ships	X	X																				X	X	
Ship's Medical Chest & Medical Aid at Sea	X	X																				X	X	
Medical Section, International Code of Signals	X	X	X																			X	X	X
Maritime Law:																								
International Maritime Law:																								
International Convention on Load Lines	X	X																				X	X	
SOLAS	X	X																				X	X	
MARPOL 73/78	X	X	X	X															X	X		X	X	X
International Health Regulations	X	X																				X	X	
Other International Instruments for Ship/Passenger/Crew/ Cargo Safety	X	X		X																		X	X	
National Maritime Law:																								
Load Lines	X	X	X	X			X	X		3	3	3	3	X								X	X	X
Certification & Documentation of Vessels	X	X		X	X	X	X	X	X	X		X		X	X	X		X	X			X	X	
Rules & Regulations for Inspected Vessels	X	X	X	7						X	X	X	X	7	X	X	X	7				X	X	X
Rules & Regulations for Inspected T-Boats				9										9				9						

Examination topics	1	2	3	4	5	6	7	8	9	10	11	12	13	14	15	16	17	18	19	20	21	22	23	24
Vessels																								
Rules & Regulations for Inspected Vessels	X	X	X	7						X	X	X	X	7	X	X	X	7				X	X	X
Rules & Regulations for Inspected T-Boats				9										9				9						
Rules and Regulations for Uninspected Vessels					X	X	X	X	X										X	X				
Pollution Prevention Regulations	X	X	X	X	X	X	X	X	X	X	X	X	X	X	X	X	X	X	X	X		X	X	X
Pilotage	X	X					X	X	X												X	X	X	
Credentialing of Seamen	X	X	X	X	X	X	X	X	X	X	X	X	X	X	X	X	X	X	X	X		X	X	X
Shipment and Discharge, Manning	X	X		X			X			X		X			X	X						X	X	
Title 46, U.S. Code	X	X								X		X			X	X						X	X	
Captain of the Port Regulations, Vessel Traffic Service Procedures for the Route Desired																					X			
Shipboard Management and Training:																								
Personnel Management	X	X								X		X			X	X			X			X	X	
Shipboard Organization	X	X								X		X			X	X			X			X	X	
Required Crew Training	X	X								X		X			X	X			X			X	X	
Ship Sanitation	X	X		X	X	X	X	X	X	X		X		X	X	X		X	X			X	X	
Vessel Alteration/Repair Hot Work	X	X	X	X			X	X	X	X	X	X	X	X	X	X	X	X	X	X		X	X	X
Safety	X	X	X	X	X	X	X	X	X	X	X	X	X	X	X	X	X	X	X	X		X	X	X
Ship's Business:																								
Charters	X	X					X	X	X	X		X			X	X						X	X	
Liens and Salvage	X	X					X	X	X	X		X			X	X						X	X	
Insurance	X	X					X	X	X	X		X			X	X						X	X	
Entry and Clearance	X	X					X	X	X	X		X			X	X						X	X	
ISM and Safety Management Systems	X	X	X				X	X	X													X	X	X
Certificates and	X	X	X	X	X	X	X	X	X	X	X	X	X	X	X	X	X	X	X	X		X	X	X

Examination topics	1	2	3	4	5	6	7	8	9	10	11	12	13	14	15	16	17	18	19	20	21	22	23	24
Signals: Storm/Wreck/Distress/ Special	X	X	X	X	X	X	X	X	X	X	X	X	X	X	X	X	X	X	X	X		X	X	X
International Code of Signals	X	X	X																			X	X	X
IMO Standard Maritime Communication Phrases	X	X	X																			X	X	X
Lifesaving:																								
Survival at Sea	X	X	X	X	X		X												X	X		X	X	X
Lifesaving Appliance Regulations	X	X	X	7						X	X	X	X	7	X	X	X	7				X	X	X
Lifesaving Appliance Regulations for T-Boats				9										9				9						
Lifesaving Appliance Operation	X	X	X	7	X	X	X	X	X	X	X	X	X	7	X	X	X	7	X	X		X	X	X
Lifesaving Appliance Operations for T-Boats				9										9				9						
Search and Rescue:																								
Search and Rescue Procedures	X	X	X							X		X							X			X	X	X
Automated Mutual-Assistance Vessel Rescue System and International Aeronautical and Maritime Search And Rescue Manual	X	X	X																			X	X	X
Sail/Auxiliary Sail Vessels Addendum (8)	X	X	X	X	X	X				X	X	X	X	X	X	X	X	X						

1 For ocean routes only.

2 River chart navigation only.

3 Only on Great Lakes specific modules taken for "Great Lakes and Inland" routes.

4 Including recommended courses, distances, prominent aids to navigation, depths of waters in channels and over hazardous shoals, and other important features of the route,

such as character of the bottom. The Coast Guard may accept chart sketching of only a portion or portions of the route for long or extended routes.

5 COLREGS required if endorsement is not limited to non-COLREGS waters.

6 For officer endorsements of 1,600 GRT or more.

7 Only for officer endorsements of 100 GRT or more.

8 Sail vessel safety precautions, rules of the road, operations, heavy weather procedures, navigation, maneuvering, and sailing terminology. Applicants for sail/auxiliary sail endorsements to master, mate or operator of uninspected passenger vessels are also tested in the subjects contained in this addendum.

9 For officer endorsements of less than 100 GRT.

[USCG–2004–17914, 78 FR 77909, Dec. 24, 2013, as amended by USCG–2014–0688, 79 FR 58277, Sept. 29, 2014]

§ 11.920 Subjects for MODU endorsements.

Table 1 to § 11.920 gives the codes used in Table 2 to § 11.920 for MODU endorsements. Table 2 to § 11.920 indicates the examination subjects for each endorsement by the code number.

TABLE 1 TO § 11.920—CODES FOR MODU ENDORSEMENTS

1. OIM/Unrestricted.
2. OIM/Surface Units Underway.
3. OIM/Surface Units on Location.
4. OIM/Bottom Bearing Units Underway.
5. OIM/Bottom Bearing Units on Location.
6. Barge Supervisor.
7. Ballast Control Operator.

TABLE 2 TO § 11.920—SUBJECTS FOR MODU LICENSES

Examination topics	1	2	3	4	5	6	7
Watchkeeping:							
COLREGS	X	X	.....	X	.....	X	
"Basic Principles for Navigational Watch"	X	X	X	X	X	X	
MODU obstruction lights	X	.....	X	.....	X	X	
Meteorology and oceanography:							
Synoptic chart weather forecasting	X	X	X	X	X	X	
Characteristics of weather systems	X	X	X	X	X	X	X
Ocean current systems	X	X	X	X	X	X	
Tide and tidal current publications	X	X	X	X	X	X	
Stability, ballasting, construction and damage control:							
Principles of ship construction, structural members	X	X	X	X	X	X	X
Trim and stability	X	X	X	X	X	X	X
Damaged trim and stability countermeasures	X	X	X	X	.....	X	X
Stability and trim calculations	X	X	X	X	.....	X	X
Load line requirements	X	X	X	X	X	X	X
Operating manual:							
Rig characteristics and limitations	X	X	X	X	X	X	X
Hydrostatics data	X	X	X	X	.....	X	X
Tank tables	X	X	X	X	X	X	X
KG limitations	X	X	X	X	.....	X	X
Severe storm instructions	X	X	X	X	X	X	X
Transit instructions	X	X	.....	X	.....	X	X
On-station instructions	X	.....	X	.....	X	X	X
Unexpected list or trim	X	X	X	X	.....	X	X
Ballasting procedures	X	X	X	.....	.....	X	X
Operation of bilge system	X	X	X	X	.....	X	X
Leg loading calculations	X	.....	.....	X	X	.....	
Completion of variable load form	X	X	X	X	X	X	X
Evaluation of variable load form	X	X	X	X	X	X	X
Emergency procedures	X	X	X	X	X	X	X
Maneuvering and handling:							
Anchoring and anchor handling	X	X	X	.....	.....	X	
Heavy weather operations	X	X	X	X	X	X	X
Mooring, positioning	X	X	X	X	.....	X	X
Moving, positioning	X	X	.....	X	.....	X	
Fire prevention and firefighting appliances:							
Organization of fire drills	X	X	X	X	X	X	X
Classes and chemistry of fire	X	X	X	X	X	X	X
Firefighting systems	X	X	X	X	X	X	X
Firefighting equipment and regulations	X	X	X	X	X	X	X
Basic firefighting and prevention of fires	X	X	X	X	X	X	X
Emergency procedures and contingency plans:							
Temporary repairs	X	X	X	X	.....	X	
Fire or explosion	X	X	X	X	X	X	X
Abandon unit	X	X	X	X	X	X	X
Man overboard	X	X	X	X	X	X	X
Heavy weather	X	X	X	X	X	X	X
Collision	X	X	X	X	X	X	X
Failure of ballast control system	X	X	X	.....	.....	X	X
Mooring emergencies	X	.....	X	.....	.....	X	X
Blowouts	X	.....	X	.....	X	X	X
H_2S safety	X	.....	X	.....	X	X	X
General Engineering—Power plants and auxiliary systems:							
Marine engineering terminology	X	X	X	X	X	X	X
Engineering equipment, operations and failures	X	X	X	X	X	X	
Offshore drilling operations	.....	.....	.....	.....	.....	.....	X
Deck seamanship—general:							
Transfer of personnel	X	X	X	X	X	X	
Support boats/helicopters	X	X	X	X	X	X	
Cargo stowage and securing	X	X	X	X	X	X	

TABLE 2 TO § 11.920—SUBJECTS FOR MODU LICENSES—Continued

Examination topics	1	2	3	4	5	6	7
Hazardous materials/dangerous goods precautions	X	X	X	X	X	X	
Mooring equipment	X	X	X	X	X	X	
Crane use procedures and inspections	X	X	X	X	X	X	
Medical care:							
Knowledge and use of:							
First aid	X	X	X	X	X	X	X
First response medical action	X	X	X	X	X	X	X
Maritime law and regulation:							
National maritime law:							
Certification and documentation of vessels	X	X	X	X	X	.....	
Ship sanitation	X	X	X	X	X	.....	
Regulations for vessel inspection	X	X	X	X	X	.....	
Pollution prevention regulations	X	X	X	X	X	X	X
Credentialing regulations	X	X	X	X	X	.....	
Rules and regulations for MODUs	X	X	X	X	X	X	
International Maritime law:							
International Maritime Organization	X	X	X	X	X	.....	
International Convention on Load Lines	X	X	X	X	.....	.....	X
MARPOL 73/78	X	X	X	X	X	.....	
Personnel Management and Training:							
Ship's business including:							
Required logs and recordkeeping	X	X	X	X	X	X	
Casualty reports and records	X	X	X	X	X	.....	
Communications:							
Radio communications and FCC permit	X	X	X	X	X	X	
Radiotelephone procedures	X	X	X	X	X	X	
Lifesaving/Survival:	.....	.....	.....	.....	.....	.....	
Lifesaving appliance operation (launching, boat handling)	X	X	X	X	X	X	X
Procedures/rules for lifeboats, survival suits, personal flotation devices (PFDs), life rafts and emergency signals	X	X	X	X	X	X	X
Emergency radio transmissions	X	X	X	X	X	X	X
Survival at sea	X	X	X	X	X	X	X

§ 11.950 Examination subjects for engineer officer endorsements.

Table 1 to § 11.950 gives the codes used in Table 2 to § 11.950 for engineer officer endorsements. Table 2 to § 11.950 indicates the examination subjects for each endorsement by the code number.

TABLE 1 TO § 11.950—CODES FOR ENGINEER OFFICER ENDORSEMENTS

1. First assistant engineer (unlimited).
2. Third assistant engineer (unlimited).

TABLE 1 TO § 11.950—CODES FOR ENGINEER OFFICER ENDORSEMENTS—Continued

3. Chief engineer (limited).
4. Assistant engineer (limited).
5. Designated duty engineer (unlimited).
6. Designated duty engineer (4,000 HP).
7. Designated duty engineer (1,000 HP).
8. Chief engineer (uninspected fishing industry vessels).
9. Assistant engineer (uninspected fishing industry vessels).
10. Chief engineer (MODU).
11. Assistant engineer (MODU).
12. Chief engineer (OSV unlimited).
13. Assistant engineer (OSV unlimited).
14. Chief engineer (OSV 4,000 HP).
15. Assistant engineer (OSV 4,000 HP).

Table 2 to § 11.950 -- Subjects for engineer officer endorsements

	1			2			3			4			5			6		
	S	M	G	S	M	G	S	M	G	S	M	G	S	M	G	S	M	G
General Subjects:																		
Prints and tables	X	X	X	X	X	X	X	X	X	X	X	X	X	X	X	X	X	X
Hand tools				X	X	X				X	X	X	X	X	X	X	X	X
Pipes, fittings, and valves				X	X	X				X	X	X	X	X	X	X	X	X
Hydraulics	X	X	X	X	X	X	X	X	X	X	X	X	X	X	X	X	X	X
Materials science				X	X	X				X	X	X						
Bilge systems	X	X	X	X	X	X				X	X	X	X	X	X	X	X	X
Oily water separators	X	X	X	X	X	X	X	X	X	X	X	X	X	X	X	X	X	X
Sanitary/sewage systems	X	X	X	X	X	X	X	X	X	X	X	X	X	X	X	X	X	X
Freshwater systems	X	X	X	X	X	X				X	X	X	X	X	X	X	X	X
Lubricants				X	X	X				X	X	X	X	X	X	X	X	X
Lubrication systems	X	X	X	X	X	X				X	X	X	X	X	X	X	X	X
Automation systems	X	X	X	X	X	X	X	X	X	X	X	X	X	X	X	X	X	X
Control systems	X	X	X	X	X	X	X	X	X	X	X	X	X	X	X	X	X	X
Propellers/ shafting systems	X	X	X	X	X	X				X	X	X	X	X	X	X	X	X
Machine shop				X	X	X				X	X	X	X	X	X	X	X	X
Distilling systems	X	X	X	X	X	X				X	X	X	X	X	X			
Pumps				X	X	X				X	X	X	X	X	X	X	X	X
Compressors				X	X	X				X	X	X	X	X	X	X	X	X
Administration	X	X	X				X	X	X				X	X	X	X	X	X
Bearings	X	X	X	X	X	X	X	X	X	X	X	X	X	X	X	X	X	X
Governors	X	X	X	X	X	X	X	X	X	X	X	X	X	X	X	X	X	X
Cooling systems	X	X	X	X	X	X				X	X	X	X	X	X	X	X	X
Instruments				X	X	X				X	X	X	X	X	X	X	X	X
Ship construction and repair				X	X	X				X	X	X	X	X	X	X	X	X
Steering systems	X	X	X	X	X	X	X	X	X	X	X	X	X	X	X	X	X	X

	1			2			3			4			5			6		
	S	M	G	S	M	G	S	M	G	S	M	G	S	M	G	S	M	G
Deck machinery	X	X	X	X	X	X	X	X	X	X	X	X	X	X	X	X	X	X
Ventilation systems	X	X	X	X	X	X	X	X	X	X	X	X	X	X	X	X	X	X
Thermodynamics				X	X	X				X	X	X	X	X	X			
Heat exchangers				X	X	X				X	X	X	X	X	X	X	X	X
Watch duties				X	X	X				X	X	X						
International rules and regulations				X	X	X				X	X	X	X	X	X			
Refrigeration and air conditioning:																		
Theory				X	X	X				X	X	X	X	X	X	X	X	X
Air conditioning systems	X	X	X	X	X	X				X	X	X	X	X	X	X	X	X
Refrigeration systems	X	X	X	X	X	X				X	X	X	X	X	X	X	X	X
Control systems	X	X	X	X	X	X	X	X	X	X	X	X	X	X	X	X	X	X
Instruments-gauges				X	X	X				X	X	X	X	X	X	X	X	X
Safety	X	X	X	X	X	X	X	X	X	X	X	X	X	X	X	X	X	X
Casualty control	X	X	X	X	X	X	X	X	X	X	X	X	X	X	X	X	X	X
Electricity, electronics and control systems:																		
Theory				X	X	X				X	X	X	X	X	X	X	X	X
General maintenance				X	X	X				X	X	X	X	X	X	X	X	X
Generators				X	X	X				X	X	X	X	X	X	X	X	X
Motors				X	X	X				X	X	X	X	X	X	X	X	X
Motor controllers	X	X	X	X	X	X	X	X	X	X	X	X	X	X	X	X	X	X
Propulsion systems	X	X	X	X	X	X	X	X	X	X	X	X	X	X	X	X	X	X
Distribution systems	X	X	X	X	X	X	X	X	X	X	X	X	X	X	X	X	X	X
Electronic systems	X	X	X	X	X	X	X	X	X	X	X	X	X	X	X	X	X	X
Batteries				X	X	X				X	X	X	X	X	X	X	X	X
Communications				X	X	X				X	X	X	X	X	X	X	X	X
Safety	X	X	X	X	X	X	X	X	X	X	X	X	X	X	X	X	X	X
Casualty control	X	X	X	X	X	X	X	X	X	X	X	X	X	X	X	X	X	X
Troubleshooting	X	X	X				X	X	X				X	X	X	X	X	X

	1			2			3			4			5			6		
	S	M	G	S	M	G	S	M	G	S	M	G	S	M	G	S	M	G
High voltage systems	X	X	X	X	X	X	X	X	X	X	X	X	X	X	X	X	X	X
Computers and networks	X	X	X	X	X	X	X	X	X	X	X	X	X	X	X	X	X	X
Bridge navigation equipment	X	X	X				X	X	X									
Steam Generators:																		
Steam-theory				X	X					X	X		X			X		
Main boilers	X			X			X			X			X			X		
Auxiliary boilers		X	X		X	X					X	X		X	X		X	X
Feedwater systems	X	X	X	X	X	X				X	X	X	X	X	X	X	X	X
Condensate systems	X	X	X	X	X	X				X	X	X	X	X	X	X	X	X
Recovery systems	X	X	X	X	X	X				X	X	X	X	X	X	X	X	X
Fuel	X			X			X			X			X			X		
Main fuel systems	X			X						X			X			X		
Boiler water chemistry	X			X			X			X			X			X		
Control systems	X			X			X			X			X			X		
Automation systems	X			X			X			X			X			X		
Safety	X			X			X			X			X			X		
Casualty control	X			X			X			X			X			X		
Steam engines:																		
Main turbines	X			X			X			X			X			X		
Auxiliary turbines	X	X		X	X					X	X		X	X		X		
Governor systems	X			X			X			X			X			X		
Control systems	X			X			X			X			X			X		
Automation systems	X			X			X			X			X			X		
Lubrication systems	X			X						X			X			X		
Drive systems	X			X			X			X			X			X		
Auxiliary diesels	X			X			X			X			X			X		
Safety	X			X			X			X			X			X		
Casualty control	X			X			X			X			X			X		
Motor propulsion:																		
Fundamentals					X						X			X			X	

	1			2			3			4			5			6		
	S	M	G	S	M	G	S	M	G	S	M	G	S	M	G	S	M	G
Main engines		X			X			X			X			X			X	
Auxiliary engines		X			X			X			X			X			X	
Starting systems		X			X			X			X			X			X	
Lubrication systems		X			X			X			X			X			X	
Fuel		X			X			X			X			X			X	
Fuel systems		X			X			X			X			X			X	
Fuel injection systems		X			X			X			X			X			X	
Intake systems					X						X			X			X	
Exhaust systems					X						X			X			X	
Cooling systems					X						X			X			X	
Air-charging systems		X			X			X			X			X			X	
Drive systems					X						X			X			X	
Control systems		X			X			X			X			X			X	
Automation systems		X			X			X			X			X			X	
Governors		X			X			X			X			X			X	
Steam systems		X			X						X			X			X	
Water chemistry		X			X			X			X			X			X	
Safety		X			X			X			X			X			X	
Casualty control		X			X			X			X			X			X	
Safety:																		
Fire theory	X	X	X	X	X	X	X	X	X	X	X	X	X	X	X	X	X	X
Fire prevention	X	X	X	X	X	X	X	X	X	X	X	X	X	X	X	X	X	X
Fire fighting	X	X	X	X	X	X	X	X	X	X	X	X	X	X	X	X	X	X
Flooding	X	X	X	X	X	X	X	X	X	X	X	X	X	X	X	X	X	X
Dewatering	X	X	X	X	X	X	X	X	X	X	X	X	X	X	X	X	X	X
Stability and trim	X	X	X	X	X	X	X	X	X	X	X	X	X	X	X	X	X	X
Damage control	X	X	X	X	X	X	X	X	X	X	X	X	X	X	X	X	X	X
Emergency equipment and lifesaving appliances.																		
General safety	X	X	X	X	X	X	X	X	X	X	X	X	X	X	X	X	X	X
Hazardous materials	X	X	X	X	X	X	X	X	X	X	X	X	X	X	X	X	X	X

	1			2			3			4			5			6		
	S	M	G	S	M	G	S	M	G	S	M	G	S	M	G	S	M	G
Pollution prevention	X	X	X	X	X	X	X	X	X	X	X	X	X	X	X	X	X	X
Inspections and surveys	X	X	X				X	X	X				X	X	X	X	X	X
U.S. rules and regulations	X	X	X	X	X	X	X	X	X	X	X	X	X	X	X	X	X	X
Gas Turbines																		
Configurations						X						X			X			X
Fundamentals						X						X			X			X
Thermo-dynamics			X			X			X			X			X			X
Construction						X						X			X			X
Operating parameters			X			X			X			X			X			X
Start systems						X						X			X			X
Lubrication systems			X			X			X			X			X			X
Fuel systems			X			X			X			X			X			X
Drive systems			X			X			X			X			X			X
Bleed air systems						X						X			X			X
Intake and exhaust systems						X						X			X			X
Instrumentation and controls			X			X			X			X			X			X
Maintenance			X			X			X			X			X			X
Inspection			X						X						X			X
Troubleshooting			X						X						X			X
Casualty control			X			X			X			X			X			X
Management level																		
Management skills	X	X	X				X	X	X									
Crisis management	X	X	X				X	X	X									
Shipyard	X	X	X				X	X	X									
Inspections-surveys	X	X	X				X	X	X									
Vessel layup	X	X	X				X	X	X									
Employee familiarization	X	X	X				X	X	X									
Operational planning	X	X	X				X	X	X									

	1			2			3			4			5			6		
	S	M	G	S	M	G	S	M	G	S	M	G	S	M	G	S	M	G
Assessing competency	X	X	X				X	X	X									
Management practices	X	X	X				X	X	X									
Arbitration	X	X	X				X	X	X									
Internal documents	X	X	X				X	X	X									
International laws-conventions	X	X	X				X	X	X									
Technical analysis	X	X	X				X	X	X									
Maintenance systems	X	X	X				X	X	X									
Troubleshooting	X	X	X				X	X	X									
Codes and regulations	X	X	X				X	X	X									

Note: Numbers on the top row of this table represent endorsement titles found in table 1 to 11.950

S - Steam propulsion

M - Motor propulsion

G - Gas turbine propulsion

Table 3 to § 11.950 -- Subjects for Engineer Officer Endorsements

	7			8		9		10		11		12		13		14		15	
	S	M	G	S	M	S	M	S	M	S	M	S	M	S	M	S	M	S	M
General Subjects:																			
Prints and tables	X	X	X	X	X	X	X	X	X	X	X	X	X	X	X	X	X	X	X
Hand tools						X	X			X	X			X	X			X	X
Pipes, fittings, and valves						X	X			X	X			X	X			X	X
Hydraulics	X	X	X	X	X	X	X	X	X	X	X	X	X	X	X	X	X	X	X
Materials science																			
Bilge systems	X	X	X			X	X			X	X			X	X			X	X
Oily water separators	X	X	X	X	X	X	X	X	X	X	X	X	X	X	X	X	X	X	X
Sanitary/sewage systems	X	X	X	X	X	X	X	X	X	X	X	X	X	X	X	X	X	X	X
Freshwater systems	X	X	X			X	X			X	X			X	X			X	X
Lubricants	X	X	X			X	X			X	X			X	X			X	X
Lubrication systems	X	X	X			X	X			X	X			X	X			X	X
Automation systems	X	X	X	X	X	X	X	X	X	X	X	X	X	X	X	X	X	X	X
Control systems	X	X	X	X	X	X	X	X	X	X	X	X	X	X	X	X	X	X	X
Propellers/ shafting systems	X	X	X			X	X			X	X			X	X			X	X
Machine shop	X	X	X			X	X			X	X			X	X			X	X
Distilling systems						X	X			X	X								
Pumps	X	X	X			X	X			X	X			X	X			X	X
Compressors	X	X	X			X	X			X	X			X	X			X	X
Administration	X	X	X	X	X			X	X			X	X			X	X		
Bearings	X	X	X	X	X	X	X	X	X	X	X	X	X	X	X	X	X	X	X
Governors	X	X	X	X	X	X	X	X	X	X	X	X	X	X	X	X	X	X	X
Cooling systems	X	X	X			X	X			X	X			X	X			X	X
Instruments	X	X	X			X	X			X	X			X	X			X	X
Ship construction and repair	X	X	X	X	X	X	X	X	X	X	X	X	X	X	X	X	X	X	X
Steering systems	X	X	X	X	X	X	X	X	X	X	X	X	X	X	X	X	X	X	X

	7			8		9		10		11		12		13		14		15	
	S	M	G	S	M	S	M	S	M	S	M	S	M	S	M	S	M	S	M
Deck machinery	X	X	X	X	X	X	X	X	X	X	X	X	X	X	X	X	X	X	X
Ventilation systems	X	X	X			X	X			X	X			X	X			X	X
Thermodynamics																			
Heat exchangers	X	X	X	X	X	X	X	X	X	X	X	X	X	X	X	X	X	X	X
Watch duties				X	X	X	X	X	X	X	X	X	X	X	X	X	X	X	X
International rules and regulations						X	X			X	X			X	X			X	X
Refrigeration and air conditioning:																			
Theory	X	X	X			X	X			X	X			X	X			X	X
Air conditioning systems	X	X	X	X	X	X	X	X	X	X	X	X	X	X	X	X	X	X	X
Refrigeration systems	X	X	X	X	X	X	X	X	X	X	X	X	X	X	X	X	X	X	X
Control systems	X	X	X	X	X	X	X	X	X	X	X	X	X	X	X	X	X	X	X
Instruments-gauges	X	X				X	X			X	X			X	X			X	X
Safety	X	X	X	X	X	X	X	X	X	X	X	X	X	X	X	X	X	X	X
Casualty control	X	X	X	X	X	X	X	X	X	X	X	X	X	X	X	X	X	X	X
Electricity, electronics and control systems**:**																			
Theory	X	X	X			X	X			X	X			X	X			X	X
General maintenance	X	X	X			X	X			X	X			X	X			X	X
Generators	X	X	X	X	X	X	X	X	X	X	X	X	X	X	X	X	X	X	X
Motors	X	X	X			X	X			X	X			X	X			X	X
Motor controllers	X	X	X	X	X	X	X	X	X	X	X	X	X	X	X	X	X	X	X
Propulsion systems	X	X	X	X	X	X	X	X	X	X	X	X	X	X	X	X	X	X	X
Distribution systems	X	X	X	X	X	X	X	X	X	X	X	X	X	X	X	X	X	X	X
Electronic systems	X	X	X	X	X	X	X	X	X	X	X	X	X	X	X	X	X	X	X
Batteries	X	X	X			X	X			X	X			X	X			X	X
Communications	X	X	X	X	X	X	X	X	X	X	X	X	X	X	X	X	X	X	X
Safety	X	X	X	X	X	X	X	X	X	X	X	X	X	X	X	X	X	X	X
Casualty control	X	X	X	X	X	X	X	X	X	X	X	X	X	X	X	X	X	X	X
Troubleshooting	X	X	X	X	X			X	X			X	X			X	X		

	7			8		9		10		11		12		13		14		15	
	S	M	G	S	M	S	M	S	M	S	M	S	M	S	M	S	M	S	M
High voltage systems								X	X			X	X			X	X		
Computers and networks								X	X			X	X			X	X		
Bridge navigation equipment								X	X			X	X			X	X		
Steam Generators:																			
Steam-theory	X					X	X			X	X			X	X			X	X
Main boilers	X			X		X		X		X		X		X					
Auxiliary boilers		X	X		X		X		X		X		X		X		X		X
Feedwater systems	X	X	X		X	X	X		X	X	X	X	X	X	X		X	X	X
Condensate systems	X	X	X		X	X	X		X	X	X	X	X	X	X		X	X	X
Recovery systems	X	X	X		X	X	X		X	X	X	X	X	X	X		X	X	X
Fuel	X			X		X		X		X		X		X		X		X	
Main fuel systems				X		X				X				X				X	
Boiler water chemistry	X			X		X		X		X		X		X		X		X	
Control systems	X			X		X		X		X		X		X		X		X	
Automation systems	X			X		X		X		X		X		X		X		X	
Safety	X			X		X		X		X		X		X		X		X	
Casualty control	X			X		X		X		X		X		X		X		X	
Steam engines:																			
Main turbines	X			X		X		X		X		X		X		X		X	
Auxiliary turbines	X					X				X				X				X	
Governor systems	X			X		X		X		X		X		X		X		X	
Control systems	X			X		X		X		X		X		X		X		X	
Automation systems	X			X		X		X		X		X		X		X		X	
Lubrication systems	X					X				X				X				X	
Drive systems	X			X		X		X		X		X		X		X		X	
Safety	X			X		X		X		X		X		X		X		X	
Casualty control	X			X		X		X		X		X		X		X		X	
Motor propulsion:																			
Fundamentals		X					X				X				X				X
Main engines		X			X		X		X		X		X		X		X		X

	7			8		9		10		11		12		13		14		15	
	S	M	G	S	M	S	M	S	M	S	M	S	M	S	M	S	M	S	M
Auxiliary engines		X			X		X		X		X		X		X		X		X
Starting systems		X			X		X		X		X		X		X		X		X
Lubrication systems		X			X		X		X		X		X		X		X		X
Fuel		X			X		X		X		X		X		X		X		X
Fuel systems		X			X		X		X		X		X		X		X		X
Fuel injection systems		X			X		X		X		X		X		X		X		X
Intake systems		X					X				X				X				X
Exhaust systems		X					X				X				X				X
Cooling systems		X					X				X				X				X
Air-charging systems		X			X		X		X		X		X		X		X		X
Drive systems		X			X		X		X		X		X		X		X		X
Control systems		X			X		X		X		X		X		X		X		X
Automation systems		X			X		X		X		X		X		X		X		X
Governors		X			X		X		X		X		X		X		X		X
Steam systems		X					X				X				X				X
Water chemistry		X					X				X				X				X
Safety		X			X		X		X		X		X		X		X		X
Casualty control		X			X		X		X		X		X		X		X		X
Safety:																			
Fire theory	X	X	X	X	X	X	X	X	X	X	X	X	X	X	X	X	X	X	X
Fire prevention	X	X	X	X	X	X	X	X	X	X	X	X	X	X	X	X	X	X	X
Fire fighting	X	X	X	X	X	X	X	X	X	X	X	X	X	X	X	X	X	X	X
Flooding	X	X	X	X	X	X	X	X	X	X	X	X	X	X	X	X	X	X	X
Dewatering	X	X	X	X	X	X	X	X	X	X	X	X	X	X	X	X	X	X	X
Stability and trim	X	X	X	X	X	X	X	X	X	X	X	X	X	X	X	X	X	X	X
Damage control	X	X	X	X	X	X	X	X	X	X	X	X	X	X	X	X	X	X	X
Emergency equipment and lifesaving appliances.																			
General safety	X	X	X	X	X	X	X	X	X	X	X	X	X	X	X	X	X	X	X
Hazardous materials	X	X	X	X	X	X	X	X	X	X	X	X	X	X	X	X	X	X	X
Pollution	X	X	X	X	X	X	X	X	X	X	X	X	X	X	X	X	X	X	X

	7			8		9		10		11		12		13		14		15	
	S	M	G	S	M	S	M	S	M	S	M	S	M	S	M	S	M	S	M
Inspections and surveys	X	X	X	X	X			X	X			X	X			X	X		
U.S. rules and regulations	X	X	X	X	X	X	X	X	X	X	X	X	X	X	X	X	X	X	X
Gas Turbines																			
Configurations			X																
Fundamentals			X																
Thermo-dynamics			X																
Construction			X																
Operating parameters			X																
Start systems			X																
Lubrication systems			X																
Fuel systems			X																
Drive systems			X																
Bleed air systems			X																
Intake and exhaust systems			X																
Instrumentation and controls			X																
Maintenance			X																
Inspection			X																
Troubleshooting			X																
Casualty control			X																
Management level																			
Management skills				X	X			X	X			X	X			X	X		
Crisis management				X	X			X	X			X	X			X	X		
Shipyard				X	X			X	X			X	X			X	X		
Inspections-surveys				X	X			X	X			X	X			X	X		
Vessel layup				X	X			X	X			X	X			X	X		
Employee familiarization				X	X			X	X			X	X			X	X		
Operational planning				X	X			X	X			X	X			X	X		
Assessing competency				X	X			X	X			X	X			X	X		

	7			8		9		10		11		12		13		14		15	
	S	M	G	S	M	S	M	S	M	S	M	S	M	S	M	S	M	S	M
Management practices				X	X			X	X			X	X			X	X		
Arbitration				X	X			X	X			X	X			X	X		
Internal documents				X	X			X	X			X	X			X	X		
International laws-conventions				X	X			X	X			X	X			X	X		
Technical analysis				X	X			X	X			X	X			X	X		
Maintenance systems				X	X			X	X			X	X			X	X		
Troubleshooting				X	X			X	X			X	X			X	X		
Codes and regulations				X	X			X	X			X	X			X	X		

Note: Numbers on the top row of this table represent endorsement titles found in table 1 to § 11.950

S - Steam propulsion

M - Motor propulsion

G - Gas turbine propulsion

Subpart J—Recognition of Other Parties' STCW Certificates

§ 11.1001 Purpose of rules.

(a) The rules in this subpart implement Regulation I/10 of the International Convention on Standards of Training, Certification and Watchkeeping for Seafarers, 1978 as amended (STCW) (incorporated by reference, see § 11.102 of this part) by establishing requirements and procedures for the recognition and endorsement of officer certificates of competence issued by other Parties to STCW.

(b) Specific regulations on the use of non-U.S. credentialed officers and mariners with officer endorsements (except those of master) are found in § 15.720 of this subchapter.

§ 11.1003 General requirements.

(a) The Coast Guard recognizes certificates only from countries that the United States has assured itself comply with requirements of the STCW Convention and STCW Code (incorporated by reference, see § 11.102 of this part).

(b) The Coast Guard will publish a list of countries whose certificates it will recognize.

(c) The Coast Guard will issue a ''Certificate attesting recognition'' to an applicant after ensuring the validity and authenticity of the credential (certificate of competency) issued by his or her country of origin.

(d) No application from a non-US citizen for a ''Certificate attesting recognition'' issued pursuant to this subpart will be accepted unless the applicant's employer satisfies the requirements of § 11.1005 of this subpart.

§ 11.1005 Employer application requirements.

(a) The employer must submit the following to the Coast Guard, as a part of the applicant's application for a ''Certificate attesting recognition,'' on behalf of the applicant:

(1) A signed report that contains all material disciplinary actions related to the applicant, such as, but not limited to, violence or assault, theft, drug and alcohol policy violations, and sexual harassment, along with an explanation of the criteria used by the employer to determine the materiality of those actions.

(2) A signed report regarding an employer-conducted background check. The report must contain—

(i) A statement that the applicant has successfully undergone an employer-conducted background check;

(ii) A description of the employer-conducted background check; and

(iii) All information derived from the employer-conducted background check.

(b) If a ''Certificate attesting recognition'' is issued to the applicant, the employer must maintain a detailed record of the seaman's total service on all authorized U.S. flag vessels, and must make that information available to the Coast Guard upon request.

(c) In addition to the initial material disciplinary actions report and the initial employer-conducted background check specified in paragraph (a) of this section, the employer must submit an annual material disciplinary actions report to update whether there have been any material disciplinary actions related to the applicant since the last material disciplinary actions report was submitted to the Coast Guard.

(d) The employer must also submit to the Coast Guard the applicant's copy of the following:

(1) Base credential (certificate of competency), as well as any other documentary evidence of proficiency (such as Basic Training in accordance with § 11.302 of this part, Basic/Advanced Firefighting in accordance with § 11.303 of this part, Survival Craft, etc.) to verify that the applicant meets the manning requirements. The documentation must include any necessary official translation into the English language.

(2) Valid medical certificate.

(3) Valid identification document, such as a passport or Seaman's Identity Document (SID).

(e) The employer is subject to the civil penalty provisions specified in 46 U.S.C. 8103(f) for any violation of this section.

§ 11.1007 Basis for denial.

An applicant for a ''Certificate attesting recognition'' of an officer certificate issued by another party must—

(a) Have no record of material disciplinary actions during employment on any U.S. flag vessel of the employer, as verified in writing by the owner or managing operator of the U.S. flag vessels on which the applicant will be employed; and

(b) Have successfully completed an employer-conducted background check, to the satisfaction of both the employer and the Coast Guard.

§ 11.1009 Restrictions.

(a) A ''Certificate attesting recognition'' of an STCW certificate issued by another party to a non-resident alien under this subpart authorizes service only on vessels owned and/or operated in accordance with § 15.720 of this subchapter.

(b) The certificate will be issued for service only in the department for which the application was submitted.

(c) No other certificate is authorized, unless all applicable requirements of this subpart and the STCW Convention (incorporated by reference, see § 11.102 of this part) are met, and the employer makes subsequent application for a new endorsement.

(d) This certificate is not valid for service on U.S. vessels operating in U.S. waters.

Subpart K—Officers on a Passenger Ship When on an International Voyage

§ 11.1101 Purpose of rules.

The rules in this subpart establish requirements for officers serving on passenger ships as defined in § 11.1103 of this subpart.

§ 11.1103 Definitions.

Passenger ship in this subpart means a ship carrying more than 12 passengers when on an international voyage.

§ 11.1105 General requirements for officer endorsements.

(a) To serve on a passenger vessel on international voyages, masters, deck officers, chief engineers and engineer officers, must—

(1) Meet the appropriate requirements of the STCW Regulation V/2 and of section A–V/2 of the STCW Code (incorporated by reference, see § 11.102 of this part) as follows:

(i) Masters, officers, and other personnel designated on the muster list to assist passengers in emergency situation onboard passenger ships must have completed training in crowd management specified in section A–V/2 of the STCW Code.

(ii) Personnel providing direct service to passengers in passenger spaces onboard passenger ships must have completed the safety training specified in section A–V/2 of the STCW Code.

(iii) Masters, chief engineer officers, chief mates, second engineer officers, and any person designated on muster lists of having responsibility for the safety of passengers in emergency situations onboard passenger ships must have completed approved training in crisis management and human behavior as specified in section A–V/2 of the STCW Code.

(iv) Masters, chief engineer officers, chief mates, second engineer officers, and every person assigned immediate responsibility for embarking and disembarking passengers, loading, discharging or securing cargo, or closing hull openings onboard Ro-Ro passenger ships must have completed approved training in passenger safety, cargo safety, and hull integrity as specified in section A–V/2 of the STCW Code; and

(2) Hold documentary evidence as proof of meeting these requirements through approved or accepted training.

(b) Seafarers who are required to be trained in accordance with paragraph (a) of this section must provide, at intervals not exceeding 5 years, evidence of maintaining the standard of competence.

(c) The Coast Guard will accept onboard training and experience, through evidence of 1 year of sea service within the last 5 years, as meeting the requirements of paragraph (b) of this section.

(d) Personnel serving onboard small passenger vessels engaged in domestic, near-coastal voyages, as defined in § 11.301(h) of this subchapter, are not subject to any obligation for the purpose of this STCW requirement.