AUTHENTICATED
U.S. GOVERNMENT
INFORMATION
GPO

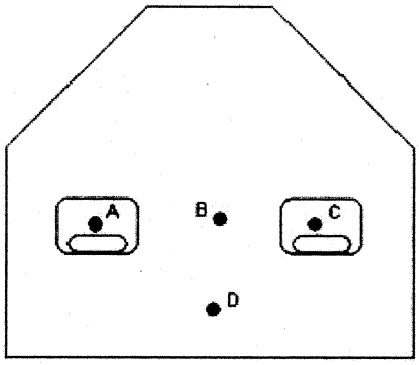

Figure 1. Microphone Locations inside Typical Locomotive Cab

(5) The observer shall stand as far from the microphone as possible. No more than two people (tester, observers or crew members) shall be inside the cab during measurements.

(6) The locomotive shall be tested under self-loading conditions if so equipped. If the locomotive is not equipped with self load, the locomotive shall be tested with no-load (No-load defined as maximum RPM—no electric load) and an adjustment of 3 dB added to the measured level.

(7) The sound level shall be recorded at the highest horsepower or throttle setting.

(8) After the engine speed has become constant and the in-cab noise is continuous, $L_{Aeq,\ T}$ shall be measured, either directly or using a 1 second sampling interval, for a minimum duration of 30 seconds at each measurement position ($L_{Aeq,\ 30s}$).

(9) The highest $L_{Aeq,\ 30s}$ of the 4 measurement positions shall be used for determining compliance with §229.121(a).

(10) A locomotive that has failed to meet the static test requirements of this regulation may be re-tested in accordance with the requirements in section II of this appendix.

IV. RECORDKEEPING

To demonstrate compliance, the entity conducting the test shall maintain records of the following data. The records created under this procedure shall be retained and made readily accessible for review for a minimum of three years. All records may be maintained in either written or electronic form.

(1) Name(s) of persons conducting the test, and the date of the test.

(2) Description of locomotive being tested, including: make, model number, serial number, and date of manufacture.

(3) Description of sound level meter and calibrator, including: make, model, type, serial number, and manufacturer's calibration date.

(4) The recorded measurement during calibration and for each microphone location during operating conditions.

(5) Other information as appropriate to describe the testing conditions and procedure, including whether or not the locomotive was tested under self-loading conditions, or not.

(6) Where a locomotive fails a test and is re-tested under the provisions of §III(9) of this appendix, the suspected reason(s) for the failure.

[71 FR 63136, Oct. 27, 2006, as amended at 74 FR 25174, May 27, 2009]

PART 230—STEAM LOCOMOTIVE INSPECTION AND MAINTENANCE STANDARDS

Subpart A—General

Sec.

230.1 Purpose and scope.
230.2 Applicability.
230.3 Implementation.
230.4 Penalties.
230.5 Preemptive effect.
230.6 Waivers.
230.7 Responsibility for compliance.
230.8 Definitions.
230.9 Information collection.
230.10 [Reserved]

GENERAL INSPECTION REQUIREMENTS

230.11 Repair of non-complying conditions.
230.12 Movement of non-complying steam locomotives.
230.13 Daily inspection.
230.14 Thirty-one (31) service day inspection.
230.15 Ninety-two (92) service day inspection.
230.16 Annual inspection.
230.17 One thousand four hundred seventy-two (1472) service day inspection.

RECORDKEEPING REQUIREMENTS

230.18 Service days.
230.19 Posting of FRA Form No. 1 and FRA Form No. 3.
230.20 Alteration and repair report for steam locomotive boilers.
230.21 Steam locomotive number change.
230.22 Accident reports.

Subpart B—Boilers and Appurtenances

230.23 Responsibility for general construction and safe working pressure.

ALLOWABLE STRESS

230.24 Maximum allowable stress.
230.25 Maximum allowable stress on stays and braces.

STRENGTH OF MATERIALS

230.26 Tensile strength of shell plates.
230.27 Maximum shearing strength of rivets.
230.28 Higher shearing strength of rivets.

INSPECTION AND REPAIR

230.29 Inspection and repair.
230.30 Lap-joint seam boilers.
230.31 Flues to be removed.
230.32 Time and method of inspection.
230.33 Welded repairs and alterations.
230.34 Riveted repairs and alterations.

PRESSURE TESTING OF BOILERS

230.35 Pressure testing.
230.36 Hydrostatic testing of boilers.
230.37 Steam test following repairs or alterations.

STAYBOLTS

230.38 Telltale holes.
230.39 Broken staybolts.
230.40 Time and method of staybolt testing.
230.41 Flexible staybolts with caps.

STEAM GAUGES

230.42 Location of gauges.
230.43 Gauge siphon.
230.44 Time of testing.
230.45 Method of testing.
230.46 Badge plates.
230.47 Boiler number.

SAFETY RELIEF VALVES

230.48 Number and capacity.
230.49 Setting of safety relief valves.
230.50 Time of testing.

WATER GLASSES AND GAUGE COCKS

230.51 Number and location.
230.52 Water glass valves.
230.53 Time of cleaning.
230.54 Testing and maintenance.
230.55 Tubular type water and lubricator glasses and shields.
230.56 Water glass lamps.

INJECTORS, FEEDWATER PUMPS, AND FLUE PLUGS

230.57 Injectors and feedwater pumps.
230.58 Flue plugs.

FUSIBLE PLUGS

230.59 Fusible plugs.

WASHING BOILERS

230.60 Time of washing.
230.61 Arch tubes, water bar tubes, circulators and thermic siphons.

STEAM PIPES

230.62 Dry pipe.
230.63 Smoke box, steam pipes and pressure parts.

STEAM LEAKS

230.64 Leaks under lagging.
230.65 Steam blocking view of engine crew.

Subpart C—Steam Locomotives and Tenders

230.66 Design, construction, and maintenance.
230.67 Responsibility for inspection and repairs.

SPEED INDICATORS

230.68 Speed indicators.

ASH PANS

230.69 Ash pans.

BRAKE AND SIGNAL EQUIPMENT

230.70 Safe condition.
230.71 Orifice testing of compressors.
230.72 Testing main reservoirs.
230.73 Air gauges.
230.74 Time of cleaning.
230.75 Stenciling dates of tests and cleaning.
230.76 Piston travel.
230.77 Foundation brake gear.
230.78 Leakage.
230.79 Train signal system.

CABS, WARNING SIGNALS, SANDERS AND LIGHTS

230.80 Cabs.
230.81 Cab aprons.
230.82 Fire doors.
230.83 Cylinder cocks.
230.84 Sanders.
230.85 Audible warning device.
230.86 Required illumination.
230.87 Cab lights.

THROTTLES AND REVERSING GEAR

230.88 Throttles.
230.89 Reverse gear.

DRAW GEAR AND DRAFT SYSTEMS

230.90 Draw gear between locomotive and tender.
230.91 Chafing irons.
230.92 Draw gear and draft systems.

DRIVING GEAR

230.93 Pistons and piston rods.
230.94 Crossheads.
230.95 Guides.
230.96 Main, side, and valve motion rods.
230.97 Crank pins.

RUNNING GEAR

230.98 Driving, trailing, and engine truck axles.
230.99 Tender truck axles.
230.100 Defects in tender truck axles and journals.
230.101 Steam locomotive driving journal boxes.
230.102 Tender plain bearing journal boxes.
230.103 Tender roller bearing journal boxes.
230.104 Driving box shoes and wedges.
230.105 Lateral motion.

TRUCKS, FRAMES AND EQUALIZING SYSTEM

230.106 Steam locomotive frame.
230.107 Tender frame and body.
230.108 Steam locomotive leading and trailing trucks.
230.109 Tender trucks.
230.110 Pilots.
230.111 Spring rigging.

WHEELS AND TIRES

230.112 Wheels and tires.
230.113 Wheels and tire defects.
230.114 Wheel centers.

STEAM LOCOMOTIVE TANKS

230.115 Feed water tanks.
230.116 Oil tanks.

APPENDIX A TO PART 230—INSPECTION REQUIREMENTS
APPENDIX B TO PART 230—DIAGRAMS AND DRAWINGS
APPENDIX C TO PART 230—FRA INSPECTION FORMS
APPENDIX D TO PART 230—CIVIL PENALTY SCHEDULE

AUTHORITY: 49 U.S.C. 20103, 20107, 20702; 28 U.S.C. 2461, note; and 49 CFR 1.49.

SOURCE: 64 FR 62865, Nov. 17, 1999, unless otherwise noted.

Subpart A—General

§ 230.1 Purpose and scope.

This part prescribes minimum Federal safety standards for all steam-propelled locomotives operated on railroads to which this part applies. This part does not restrict a railroad from adopting and enforcing additional or more stringent requirements not inconsistent with this part.

§ 230.2 Applicability.

(a) Except as provided in paragraph (b) of this section, this part applies to all railroads that operate steam locomotives.

(b) This part does not apply to:

(1) A railroad with track gage of less than 24 inches;

(2) A railroad that operates exclusively freight trains and does so only on track inside an installation that is not part of the general system of transportation;

(3) Rapid transit operations in an urban area that are not connected to the general system of transportation; or

(4) A railroad that operates passenger trains and does so only on track inside an installation that is insular, i.e., its operations are limited to a separate enclave in such a way that there is no reasonable expectation that the safety of the public—except a business guest, a licensee of the railroad or an affiliated entity, or a trespasser—would be affected by the operation. An operation will not be considered insular if one or more of the following exists on its line:

(i) A public highway-rail crossing that is in use;

(ii) An at-grade rail crossing that is in use;

(iii) A bridge over a public road or waters used for commercial navigation; or

(iv) A common corridor with another railroad, i.e., its operations are conducted within 30 feet of those of any other railroad.

(c) See appendix A of part 209 for a current statement of the FRA's policy on its exercise of jurisdiction.

§ 230.3 Implementation.

Except as provided in paragraphs (a) through (c) of this section, the locomotive owner and/or operator shall perform a 1472 service day inspection that meets the requirements of § 230.17 when the locomotive's flues would be required to be removed pursuant to § 230.10, of the regulations in effect prior to January 18, 2000. (See 49 CFR parts 200–999, revised October 1, 1978) At the time the locomotive owner and/or operator completes this inspection, it must begin to comply with the rest of the provisions of this part. Up until such time, and except as provided in paragraphs (a) through (c) of this section, compliance with the regulations in effect prior to January 18, 2000 (See 49 CFR parts 200–999, revised October 1, 1978) will constitute full compliance with this part. Any interested person may obtain the October 1, 1978 revision of 49 CFR parts 200–999 by contacting the Federal Railroad Administration, Office of Chief Counsel, 1200 New Jersey Avenue, SE., Washington, DC 20590.

(a) One year after January 18, 2000. The following sections of this part must be complied with by January 18, 2001: §§ 230.7, 230.51, 230.57, 230.68, 230.70, 230.85, 230.87, 230.115, and 230.116.

(b) *Interim flue removal extensions.* FRA will continue to consider requests for flue removal extensions under the provisions of § 230.10 of the regulations in effect prior to January 18, 2000 (See 49 CFR parts 200–999, revised October 1, 1978) until January 18, 2002.

(c) *Petition for special consideration.* The locomotive owner or operator may petition FRA for special consideration of this part's implementation with respect to any locomotive that has either fully or partially satisfied the requirements of § 230.17 within the three (3) year period prior to September 25, 1998—provided the locomotive is in full compliance with § 230.17 by the time the petition is actually filed.[1]

(1) *Petition process.* Petitions must be filed by January 18, 2001 and must be accompanied by all relevant documentation to be considered, including a FRA Form No. 4 (see appendix C of this part) that has been calculated in accordance with § 230.17, and all records that demonstrate the number of days the locomotive has been in service. Based upon the documentation provided, FRA will calculate the number of ''service days'' the locomotive has accrued and will notify the petitioner of the number of service days that remain in the locomotive's 1472 service day cycle. Petitions should be sent to FRA by some form of registered mail to ensure a record of delivery. FRA will investigate these petitions and will respond to these petitions within one year of their receipt. FRA will send its response by some form of registered mail to ensure that a record of delivery is created. In its response, FRA may grant the petition or deny it. If FRA grants the petition, the entirety of the revised requirements will become effective upon receipt of FRA's response, unless FRA's response indicates otherwise. If FRA denies the petition, the rule will become effective as provided in the first paragraph of this section.

(2) *FRA silence.* Anyone who does not receive a response within one year of the date they filed their petition, whether through administrative or postal error, must notify FRA that the response has not been received. The notification should be provided to FRA by some form of registered mail to ensure a record of delivery. Upon receipt of this notification, FRA will ensure that a response is either issued, or reissued, as soon as possible. In the interim, however, any operator who is at the end of their inspection cycle under the rules in effect prior to January 18, 2000 (See 49 CFR parts 200–999, revised October 1, 1978) will be allowed to remain in service without conducting the required inspection under § 230.17 for an

[1] NOTE: As an example, where a locomotive has received a proper boiler inspection after September 25, 1995 pursuant to §§ 230.10 and 230.11 of the regulations in effect prior to January 18, 2000 but has not had its FRA Form No. 4 updated, the locomotive owner or operator may update and verify the FRA Form No. 4 for that locomotive, and submit a timely petition that requests retroactive credit for the boiler inspection. (See 49 CFR parts 200–999, revised October 1, 1978.)

additional six months, or until they receive FRA's decision, whichever occurs first.

[64 FR 62865, Nov. 17, 1999, as amended at 74 FR 25174, May 27, 2009]

§ 230.4 Penalties.

(a) Any person who violates any requirement of this part or causes the violation of any such requirement is subject to a civil penalty of at least $650 and not more than $25,000 per violation, except that: Penalties may be assessed against individuals only for willful violations, and, where a grossly negligent violation or a pattern of repeated violations has created an imminent hazard of death or injury to persons, or has caused death or injury, a penalty not to exceed $105,000 per violation may be assessed. Each day a violation continues shall constitute a separate offense. See appendix A of part 209 for a statement of agency civil penalty policy.

(b) Any person who knowingly and willfully falsifies a record or report required by this part may be subject to criminal penalties under 49 U.S.C. 21311.

[64 FR 62865, Nov. 17, 1999, as amended at 69 FR 30594, May 28, 2004; 72 FR 51197, Sept. 6, 2007; 73 FR 79703, Dec. 30, 2008; 77 FR 24421, Apr. 24, 2012]

§ 230.5 Preemptive effect.

The Locomotive Boiler Inspection Act (49 U.S.C. 20701–20703) preempts all State laws or regulations concerning locomotive safety. *Napier* v. *Atlantic Coast Line R.R.*, 272 U.S. 605 (1926). However, FRA believes Congress did not intend to preempt State laws or regulations concerning rail operations over which FRA does not exercise jurisdiction. Therefore, in issuing this part, it is FRA's intent that State laws or regulations applicable to those rail operations to which this part does not apply (*i.e.*, insular tourist operations) not be preempted.

§ 230.6 Waivers.

(a) A person subject to a requirement of this part may petition the Administrator of FRA for a waiver of compliance with such requirement. The filing of such a petition does not affect that person's responsibility for compliance with that requirement while the petition is being considered.

(b) Each petition for waiver under this section must be filed in the manner and contain the information required by part 211 of this chapter.

(c) If the Administrator finds that a waiver of compliance is in the public interest and is consistent with railroad safety, the Administrator may grant the waiver subject to any conditions the Administrator deems necessary. Where a waiver is granted, the Administrator publishes a notice containing the reasons for granting the waiver.

(d) All waivers of every form and type from any requirement of any order or regulation implementing the Locomotive Boiler Inspection Act, 36 Stat. 913, as amended, 49 U.S.C. 20702, applicable to one or more steam locomotives, shall lapse on January 18, 2000 unless a copy of the grant of waiver is filed for reassessment prior to that date with the Office of Safety, Federal Railroad Administration, 1200 New Jersey Avenue, SE., Washington, DC 20590. FRA will review the waiver and notify the applicant whether the waiver has been continued.

[64 FR 62865, Nov. 17, 1999, as amended at 74 FR 25174, May 27, 2009]

§ 230.7 Responsibility for compliance.

(a) The locomotive owner and/or operator is directly responsible for ensuring that all requirements of this part are satisfied, and is the entity primarily responsible for compliance with this part.

(b) Although the duties imposed by this part are generally stated in terms of the duties of a railroad or a steam locomotive owner and/or operator, any person, including a contractor for a railroad, who performs any function covered by this part must perform that function in accordance with this part.

(c) Chapter 207 of Title 49 of the United States Codes makes it unlawful for any railroad to use or permit to be used on its line any steam locomotive or tender unless the entire steam locomotive or tender and its parts and appurtenances are in proper condition and safe to operate in the service to which they are put, without unnecessary danger of personal injury and have

been inspected and tested as required by this part.

§ 230.8 Definitions.

As used in this part, the terms listed in this section have the following definitions:

Administrator. The Administrator of the Federal Railroad Administration or the Administrator's delegate.

Alteration. Any change to the boiler which affects its pressure retention capability. Rating changes are considered alterations.

ANSI. American National Standards Institute.

API. American Petroleum Institute.

ASME. American Society of Mechanical Engineers.

Boiler surfaces. The boiler interior is all the space inside a boiler occupied by water or steam under pressure, and all associated surfaces inside that space exposed to that water and steam. The boiler exterior is the opposite surface of all components directly exposed to the boiler interior. This includes the fire side of the firebox sheets.

Break. A fracture resulting in complete separation into parts.

Code of original construction. The manufacturer's or industry code in effect when the boiler was constructed. If the exact code is not known, the closest contemporary code may be used provided it does not pre-date the construction date of the boiler.

Crack. A fracture without complete separation into parts, except that castings with shrinkage cracks or hot tears that do not significantly diminish the strength of the member are not considered to be cracked.

Dead locomotive. A locomotive unable to produce tractive effort.

Fire. Anything that produces products of combustion that heat transferring components of the locomotive are exposed to.

FRA. The Federal Railroad Administration.

Locomotive operator. Person or entity which operates, but which does not necessarily own, one or more steam locomotives. This term means, for purposes of inspection and maintenance responsibility, the entity responsible for the day-to-day operation of the steam locomotive, or the delegate thereof. This entity may be a railroad or a person or persons who operate a steam locomotive under contract for a railroad.

Locomotive owner. Person or entity which owns, but which does not necessarily operate, one or more steam locomotives that is operated on a railroad to which this part applies. For purposes of inspection and maintenance responsibility, this term includes that entity's delegate as well.

MAWP. Maximum allowable working pressure as specified by the steam locomotive specification FRA Form No. 4. (See appendix C of this part.)

NBIC. National Board Inspection Code published by the National Board of Boiler and Pressure Vessel Inspectors.

NDE. Non-destructive Examination.

NPS. Nominal Pipe Size.

Person. An entity of any type covered under 1 U.S.C. 1, including but not limited to the following: a railroad; a manager, supervisor, official, or other employee or agent of a railroad; any owner, manufacturer, lessor, or lessee of railroad equipment, track, or facilities; any independent contractor providing goods or services to a railroad; and any employee of such owner, manufacturer, lessor, lessee, or independent contractor.

Railroad. Any form of non-highway ground transportation that runs on rails or electromagnetic guideways and any entity providing such transportation, including commuter or other short-haul railroad passenger service in a metropolitan or suburban area and commuter railroad service that was operated by the Consolidated Rail Corporation on January 1, 1979; and high speed ground transportation systems that connect metropolitan areas, without regard to whether those systems use new technologies not associated with traditional railroads; but does not include rapid transit operations in an urban area that are not connected to the general railroad system of transportation.

Renewal. Replacement in kind with a newly manufactured or remanufactured (restored to original tolerances) component. Materials shall be suitable for the service intended.

Repair. Any work which results in a restoration in kind.

Serious injury. An injury that results in the amputation of any appendage, the loss of sight in an eye, the fracture of a bone, or the confinement in a hospital for a period of more than 24 consecutive hours.

Service day. Any calendar day that the boiler has steam pressure above atmospheric pressure with fire in the firebox. In the case of a fireless steam locomotive, any calendar day that the boiler has steam pressure above atmospheric pressure.

Stayed portion of the boiler. That portion of the boiler designed to require support to retain internal pressure by the addition of strength members, such as staybolts, braces, diagonal stays, tubes, etc.

Steam locomotive. A self-propelled unit of equipment powered by steam that is either designed or used for moving other equipment. This includes a self-propelled unit designed or used to carry freight and/or passenger traffic.

Unstayed portion of the boiler. That portion of the boiler designed to be self-supported in retaining internal pressure without additional strength members such as staybolts, braces, diagonal stays, tubes, etc.

Wastage. A reduction in the thickness of a mechanical component, such as a pipe or sheet.

§ 230.9 Information collection.

(a) [Reserved]

(b) The information collection requirements are found in the following sections: §§ 230.3, 230.12 through 230.21, 230.33, 230.34, 230.41, 230.46, 230.47, 230.75, 230.96, 230.98, and 230.116.

§ 230.10 [Reserved]

GENERAL INSPECTION REQUIREMENTS

§ 230.11 Repair of non-complying conditions.

The steam locomotive owner and/or operator shall repair any steam locomotive that fails to comply with the conditions of this part, and shall approve any such repairs made, before placing the locomotive back into service.

§ 230.12 Movement of non-complying steam locomotives.

(a) *General limitations on movement*. A steam locomotive with one or more non-complying conditions may be moved only as a lite steam locomotive or a steam locomotive in tow, except as provided in paragraph (b) of this section. Cars essential to the movement of the steam locomotive and tender(s), including tool cars and a bunk car, may accompany lite movements.

(b) *Conditions for movement*. Prior to movement, the steam locomotive owner and/or operator shall determine that it is safe to move the locomotive, determine the maximum speed and other restrictions necessary for safely conducting the movement, and notify in writing the engineer in charge of the defective steam locomotive and, if towed, the engineer in charge of the towing locomotive consist, as well as all other crew members in the cabs, of the presence of the non-complying steam locomotive and the maximum speed and other movement restrictions. In addition, a tag bearing the words ''non-complying locomotive'' shall be securely attached to each defective steam locomotive and shall contain the following information:

(1) The steam locomotive number;

(2) The name of the inspecting entity;

(3) The inspection location and date;

(4) The nature of the defect;

(5) Movement restrictions, if any;

(6) The destination; and

(7) The signature of the person making the determinations required by this paragraph (b).

(c) *Yard movements*. A non-complying steam locomotive may be moved lite or dead within a yard at speeds not in excess of 10 miles per hour without meeting the requirements of paragraph (b) of this section if the movement is solely for the purpose of repair. The locomotive owner and/or operator is responsible for ensuring that the movement may be safely made.

(d) *Non-complying conditions developed en route*. The locomotive owner and/or operator may continue in use a steam locomotive that develops a non-complying condition en route until the next daily inspection or the nearest forward point where the repairs necessary to bring it into compliance can

be made, whichever is earlier. Before continuing en route, the steam locomotive owner and/or operator shall determine that it is safe to move the steam locomotive, determine the maximum speed and other restrictions necessary for safely conducting the movement, and notify in writing the engineer in charge of the defective steam locomotive and, if towed, the engineer in charge of the towing steam locomotive consist, as well as all other crew members in the cabs, of the presence of the non-complying steam locomotive and the maximum speed and other movement restrictions.

(e) *Special notice for repair*. Nothing in this section authorizes the movement of a steam locomotive subject to a Special Notice for Repair unless the movement is made in accordance with the restrictions contained in the Special Notice.

§ 230.13 Daily inspection.

(a) *General*. An individual competent to conduct the inspection shall inspect each steam locomotive and its tender each day that they are offered for use to determine that they are safe and suitable for service. The daily inspection shall be conducted to comply with all sections of this part, and a daily inspection report filed, by an individual competent to conduct the inspection. See appendices A and B of this part.

(b) *Pre-departure*. At the beginning of each day the steam locomotive is used, an individual competent to do so shall, together with the daily inspection required in paragraph (a) of this section, inspect the steam locomotive and its tender and appurtenances to ensure that they are safe and suitable for service, paying special attention to the following items:

(1) Water glasses and gauge cocks;

(2) Boiler feedwater delivery systems, such as injectors and feedwater pumps; and

(3) Air compressors and governors, and the air brake system.

(c) *Inspection reports*. The results of the daily inspection shall be entered on an FRA Form No. 2 (See appendix C of this part) which shall contain, at a minimum, the name of the railroad, the initials and number of the steam locomotive, the place, date and time of the inspection, the signature of the employee making the inspection, a description of the non-complying conditions disclosed by the inspection, conditions found in non-compliance during the day and repaired and the signature of the person who repaired the non-conforming conditions. This report shall be filed even if no non-complying conditions are detected. A competent individual shall sign the report, certifying that all non-complying conditions were repaired before the steam locomotive is operated. This report shall be filed and retained for at least 92 days at the location designated by the steam locomotive owner and/or operator.

§ 230.14 Thirty-one (31) service day inspection.

(a) *General*. An individual competent to conduct the inspection shall perform the 31 service day inspection after the steam locomotive has accrued 31 service days. This inspection shall consist of all 31 service day inspection items and all daily inspection items. See appendix A of this part. Days in service shall be counted, recorded and readily available for inspection when requested by an FRA inspector.

(b) *FRA notification*. FRA Regional Administrators or their delegate(s) may require a steam locomotive owner or operator to provide FRA with timely notification before performing a 31 service day inspection. If the Regional Administrator or their delegate indicates their desire to be present for the 31 service day inspection, the steam locomotive owner and/or operator shall provide them a scheduled date and location for inspection. Once scheduled, the inspection must be performed at the time and place specified, unless the Regional Administrator and the steam locomotive owner and/or operator mutually agree to reschedule. If the Regional Administrator requests the inspection be performed on another date but the steam locomotive owner and/or operator and the Regional Administrator are unable to agree on a date for rescheduling, the inspection may be performed as scheduled.

(c) *Filing inspection reports*. Within 10 days of conducting the 31 service day inspection, the steam locomotive owner and/or operator shall file, for

each steam locomotive inspected, a report of inspection (FRA Form No. 1), in the place where the steam locomotive is maintained and with the FRA Regional Administrator for that region. When the report of annual inspection (FRA Form No. 3), is filed, the FRA Form No. 1 does not have to be filed until the next 31 service day inspection. (See appendix B of this part.)

§ 230.15 Ninety-two (92) service day inspection.

(a) *General.* An individual competent to conduct the inspection shall perform the 92 service day inspection after the steam locomotive has accrued 92 ''service-days.'' This inspection shall include all daily, all 31 service day, and all 92 service day inspection items. See appendix A of this part. Days in service shall be counted, recorded, and readily available for inspection when requested by an FRA inspector.

(b) *Filing inspection reports.* Within 10 days of conducting the 92 service day inspection, the steam locomotive owner and/or operator shall file, for each steam locomotive inspected, a report of inspection (FRA Form No. 1), in the place the locomotive is maintained and with the FRA Regional Administrator for that region.

When the report of annual inspection (FRA Form No. 3), is filed, the FRA Form No. 1 does not have to be filed until the next 92 service day inspection. (See appendix C of this part.)

§ 230.16 Annual inspection.

(a) *General.* (1) An individual competent to conduct the inspection shall perform the annual inspection after 368 calendar days have elapsed from the time of the previous annual inspection. This inspection shall include all daily, all 31 service day, all 92 service day, and all annual inspection items. (See appendix B of this part.)

(2) *Fifth annual inspection.* An individual competent to do so shall perform a flexible staybolt and cap inspection in accordance with § 230.41 at each fifth annual inspection.

(b) *FRA notification.* FRA Regional Administrators shall be provided written notice at least one month prior to an annual inspection and shall be afforded an opportunity to be present. If the Regional Administrator or their delegate indicates a desire to be present, the steam locomotive owner and/or operator will provide a scheduled date and location for the inspection. Once scheduled, the inspection must be performed at the time and place specified, unless the Regional Administrator and the steam locomotive owner and/or operator mutually agree to reschedule. If the Regional Administrator requests the inspection be performed on another date but the steam locomotive owner and/or operator and the Regional Administrator are unable to agree on a date for rescheduling, the inspection may be performed as scheduled.

(c) *Filing inspection reports.* Within 10 days of completing the annual inspection, the steam locomotive owner and/or operator shall file, for each steam locomotive inspected, a report of inspection (FRA Form No. 3), in the place where the steam locomotive is maintained and with the FRA Regional Administrator for that region. (See appendix A of this part)

§ 230.17 One thousand four hundred seventy-two (1472) service day inspection.

(a) *General.* Before any steam locomotive is initially put in service or brought out of retirement, and after every 1472 service days or 15 years, whichever is earlier, an individual competent to conduct the inspection shall inspect the entire boiler. In the case of a new locomotive or a locomotive being brought out of retirement, the initial 15 year period shall begin on the day that the locomotive is placed in service or 365 calendar days after the first flue tube is installed in the locomotive, whichever comes first. This 1472 service day inspection shall include all annual, and 5th annual, inspection requirements, as well as any items required by the steam locomotive owner and/or operator or the FRA inspector. At this time, the locomotive owner and/or operator shall complete, update and verify the locomotive specification card (FRA Form No. 4), to reflect the condition of the boiler at the time of this inspection. See appendices A and B of this part.

(b) *Filing inspection reports.* Within 30 days of completing the 1472 service day inspection, the steam locomotive owner and/or operator shall, for each steam locomotive inspected, file in the place where the steam locomotive is maintained and with the FRA Regional Administrator for that region a report of inspection (FRA Form No. 3), and a completed FRA Form No.4. See appendix C of this part.

RECORDKEEPING REQUIREMENTS

§ 230.18 Service days.

(a) *Service day record.* For every steam locomotive currently in service, the steam locomotive owner and/or operator shall have available, and be able to show an FRA inspector upon request, a current copy of the service day record that contains the number of service days the steam locomotive has accrued since the last 31, 92, Annual and 1472 service day inspections.

(b) *Service day report.* By the 31st of every January, every steam locomotive owner and/or operator shall file a service day report, FRA Form No. 5, with the Regional Administrator accounting for the days the steam locomotive was in service from January 1 through December 31st of the preceding year. If the steam locomotive was in service zero (0) days during that period, a report must still be filed to prevent the steam locomotive from being considered retired by FRA. (See appendix B of this part.)

(c) *Retirement where no service day reports filed.* Where the steam locomotive owner and/or operator does not file the required service day report for a steam locomotive, that steam locomotive may be considered retired by FRA. The steam locomotive owner and/or operator must complete all 1472 service day inspection items to return a retired steam locomotive to service.

§ 230.19 Posting of FRA Form No. 1 and FRA Form No. 3.

(a) *FRA Form No. 1.* The steam locomotive owner and/or operator shall place a copy of the 31 and 92 service day inspection report (FRA Form No. 1), properly filled out, under transparent cover in a conspicuous place in the cab of the steam locomotive before the inspected boiler is put into service. This FRA Form No. 1 will not be required for the first 31 service days following an annual inspection and the posting of an FRA Form No. 3. (See appendix B of this part.)

(b) *FRA Form No. 3.* In addition to the FRA Form No. 1, the steam locomotive owner and/or operator shall also maintain in the cab a current copy of FRA Form No. 3 in the manner described in paragraph (a) of this section. (See appendix C of this part.)

§ 230.20 Alteration and repair report for steam locomotive boilers.

(a) *Alterations.* When an alteration is made to a steam locomotive boiler, the steam locomotive owner and/or operator shall file an alteration report (FRA Form No. 19), detailing the changes to the locomotive with the FRA Regional Administrator within 30 days from the date the work was completed. This form shall be attached to, and maintained with, the FRA Form No. 4 until such time as a new FRA Form No. 4 reflecting the alteration is submitted to the Regional Administrator. Alteration reports shall be filed and maintained for the life of the boiler. (See appendix B of this part.)

(b) *Welded and riveted repairs to unstayed portions of the boiler.* Whenever welded or riveted repairs are performed on unstayed portions of a steam locomotive boiler, the steam locomotive owner and/or operator shall file with the FRA Regional Administrator, within 30 days from the time the work was completed, a repair report, FRA Form No. 19, that details the work done to the steam locomotive. Repair reports shall be filed and maintained for the life of the boiler. (See appendix B of this part.)

(c) *Welded and riveted repairs to stayed portions of the boiler.* Whenever welded or riveted repairs are performed on stayed portions of a steam locomotive boiler, the steam locomotive owner and/or operator shall complete a repair report (FRA Form No. 19), detailing the work done. Repair reports shall be maintained for the life of the boiler. (See appendix C of this part.)

§ 230.21 Steam locomotive number change.

When a steam locomotive number is changed, the steam locomotive owner and/or operator must reflect the change in the upper right-hand corner of all documentation related to the steam locomotive by showing the old and new numbers:

Old No. 000
New No. XXX.

§ 230.22 Accident reports.

In the case of an accident due to failure, from any cause, of a steam locomotive boiler or any part or appurtenance thereof, resulting in serious injury or death to one or more persons, the railroad on whose line the accident occurred shall immediately make a telephone report of the accident by calling the National Response Center (toll free) at Area Code 800–424–0201. The report shall state the nature of the accident, the number of persons killed or seriously injured, the place at which it occurred, and the location where the steam locomotive may be inspected. Confirmation of this report shall be immediately mailed to the Associate Administrator for Safety, Federal Railroad Administration, Washington, DC 20590, and contain a detailed report of the accident, including, to the extent known, the causes and a complete list of the casualties.

Subpart B—Boilers and Appurtenances

§ 230.23 Responsibility for general construction and safe working pressure.

The steam locomotive owner and operator are responsible for the general design and construction of the steam locomotive boilers under their control. The steam locomotive owner shall establish the safe working pressure for each steam locomotive boiler, after giving full consideration to the general design, workmanship, age, and overall condition of the complete boiler unit. The condition of the boiler unit shall be determined by, among other factors, the minimum thickness of the shell plates, the lowest tensile strength of the plates, the efficiency of the longitudinal joint, the inside diameter of the course, and the maximum allowable stress value allowed. The steam locomotive operator shall not place the steam locomotive in service before ensuring that the steam locomotive's safe working pressure has been established.

ALLOWABLE STRESS

§ 230.24 Maximum allowable stress.

(a) *Maximum allowable stress value.* The maximum allowable stress value on any component of a steam locomotive boiler shall not exceed ¼ of the ultimate tensile strength of its material.

(b) *Safety factor.* When it is necessary to use the code of original construction in boiler calculations, the safety factor value shall not be less than 4.

§ 230.25 Maximum allowable stress on stays and braces.

The maximum allowable stress per square inch of net cross sectional area on fire box and combustion chamber stays shall be 7,500 psi. The maximum allowable stress per square inch of net cross sectional area on round, rectangular, or gusset braces shall be 9,000 psi.

STRENGTH OF MATERIALS

§ 230.26 Tensile strength of shell plates.

When the tensile strength of steel or wrought-iron shell plates is not known, it shall be taken at 50,000 psi for steel and 45,000 psi for wrought iron.

§ 230.27 Maximum shearing strength of rivets.

The maximum shearing strength of rivets per square inch of cross sectional area shall be taken as follows:

Rivets	Pounds per square inch
Iron Rivets in Single Shear	38,000
Iron Rivets in Double Shear	76,000
Steel Rivets in Single Shear	44,000
Steel Rivets in Double Shear	88,000

§ 230.28 Higher shearing strength of rivets.

A higher shearing strength may be used for rivets when it can be shown through testing that the rivet material

used is of such quality as to justify a higher allowable shearing strength.

INSPECTION AND REPAIR

§ 230.29 Inspection and repair.

(a) *Responsibility*. The steam locomotive owner and/or operator shall inspect and repair all steam locomotive boilers and appurtenances under their control. They shall immediately remove from service any boiler that has developed cracks in the barrel. The steam locomotive owner and/or operator shall also remove the boiler from service whenever either of them, or the FRA inspector, considers it necessary due to other defects.

(b) *Repair standards*. (1) All defects disclosed by inspection shall be repaired in accordance with accepted industry standards—which may include established railroad practices, or NBIC or API established standards—before the steam locomotive is returned to service. The steam locomotive owner and/or operator shall not return the steam locomotive boiler or appurtenances to service unless they are in good condition and safe and suitable for service.

(2) Any welding to unstayed portions of the boiler made pursuant to § 230.33 shall be made in accordance with an accepted national standard for boiler repairs. The steam locomotive owner and/or operator shall not return the steam locomotive boiler or appurtenances to service unless they are in good condition and safe and suitable for service.

§ 230.30 Lap-joint seam boilers.

Every boiler having lap-joint longitudinal seams without reinforcing plates shall have sufficient lagging, jacketing, flues, and tubes removed at every annual inspection so that an inspection of the entire joint, inside and out, can be made, taking special care to detect grooving or cracks at the edges of the seams.

§ 230.31 Flues to be removed.

(a) *Inspection of the boiler interior*. During the 1472 service day inspection, the steam locomotive owner and/or operator shall remove all flues of steam locomotive boilers in service, except as provided in paragraph (b) of this section, for the purpose of inspecting the entire interior of the boiler and its bracing. After removing the flues, the steam locomotive owner and/or operator shall enter the boiler to remove scale from the interior and thoroughly clean and inspect it.

(b) *NDE testing*. If the boiler can be thoroughly cleaned and inspected without removing the superheater flues, and it can be shown through appropriate NDE testing methods that they are safe and suitable for service, their removal may not be required at this time. Their removal may be required, however, if the FRA inspector, or the steam locomotive owner and/or operator, considers it necessary due to identifiable safety concerns.

§ 230.32 Time and method of inspection.

(a) *Time of inspection*. The entire boiler shall completely be inspected at the 1472 service day inspection. The jacket, lagging and any other components interfering with the provision of inspection access shall be removed at this time. Those portions of the boiler that are exposed and able to be inspected as required by the daily, 31service day, annual and fifth annual inspections shall be inspected at those times. The interior of the boiler also shall be inspected at each annual inspection, after the completion of any hydrostatic test above MAWP, and whenever a sufficient number of flues are removed to allow examination. The jacket, lagging and any other components shall also be removed to provide inspection access whenever the FRA inspector, or the steam locomotive owner and/or operator, considers it necessary due to identifiable safety concerns.

(b) *Method of inspection*—(1) *Entire boiler*. During the 1472 service day inspection, the entire boiler shall be examined for cracks, pitting, grooving, or indications of overheating and for damage where mud has collected, or heavy scale formed. The edges of plates, all laps, seams, and points where cracks and defects are likely to develop, shall be thoroughly inspected. Rivets shall be inspected for corrosion and looseness.

(2) *Boiler interior*. When inspecting the boiler interior, it must be seen that braces and stays are taut, that pins are properly secured in place, and that each is in condition to support its proportion of the load. Washout plugs shall be removed for access and visual inspection of the water side of the firebox sheets. Washout plug threads, sleeves and threaded openings shall be examined at this time.

(3) *Boiler exterior*. A thorough inspection shall be made of the entire exterior of the boiler while under hydrostatic pressure.

§ 230.33 Welded repairs and alterations.

(a) *Unstayed portions of the boiler containing alloy steel or carbon steel with a carbon content over 0.25 percent*. Prior to welding on unstayed portions of the boiler, the steam locomotive owner and/or operator shall submit a written request for approval to the FRA Regional Administrator. If the approval is granted, the steam locomotive owner and/or operator shall perform any welding to unstayed portions of the boiler in accordance with an accepted national standard for boiler repairs. The steam locomotive owner and/or operator shall satisfy reporting requirements in § 230.20 at this time.

(b) *Unstayed portions of the boiler containing carbon steel not exceeding 0.25 percent carbon*. The steam locomotive owner and/or operator shall perform any welding to unstayed portions of the boiler in accordance with an accepted national standard for boiler repairs. The steam locomotive owner and/or operator shall satisfy reporting requirements in § 230.20 at this time.

(c) *Wastage*. The steam locomotive owner and/or operator shall submit a written request for approval to the FRA Regional Administrator before performing weld build up on wasted areas of unstayed surfaces of the boiler that exceed a total of 100 square inches or the smaller of 25 percent of minimum required wall thickness or ½ inch. Wasted sheets shall not be repaired by weld build up if the wasted sheet has been reduced to less than 60 percent of the minimum required thickness as required by this part.

(d) *Flush patches*. The steam locomotive owner and/or operator shall submit a written request for approval to the FRA Regional Administrator for the installation of flush patches of any size on unstayed portions of the boiler.

(e) *Stayed portions of the boiler*. The steam locomotive owner and/or operator shall perform welded repairs or alterations on stayed portions of the boiler in accordance with established railroad practices, or an accepted national standard for boiler repairs. The steam locomotive owner and/or operator shall satisfy the reporting requirements in § 230.20 at this time.

§ 230.34 Riveted repairs and alterations.

(a) *Alterations to unstayed portions of the boiler*. Prior to making riveted alterations on unstayed portions of the boiler, the steam locomotive owner and/or operator shall submit a written request for approval to the FRA Regional Administrator. If approval is granted, the steam locomotive owner and/or operator shall perform any riveting to unstayed portions of the boiler in accordance with established railroad practices or an accepted national standard for boiler repairs. The steam locomotive owner and/or operator shall satisfy reporting requirements in § 230.20 at this time.

(b) *Repairs to unstayed portions of the boiler*. The steam locomotive owner and/or operator shall perform any riveted repairs to unstayed portions of the boiler in accordance with established railroad practices, or an accepted national standard for boiler repairs. The steam locomotive owner and/or operator shall satisfy reporting requirements in § 230.20 at this time.

(c) *Repairs to stayed portions of the boiler*. The steam locomotive owner and/or operator shall perform riveted repairs or alterations on stayed portions of the boiler in accordance with established railroad practices or an accepted national standard for boiler repairs. The steam locomotive owner and/or operator shall satisfy reporting requirements in § 230.20 at this time.

PRESSURE TESTING OF BOILERS

§ 230.35 Pressure testing.

The temperature of the steam locomotive boiler shall be raised to at least 70 deg. F any time hydrostatic pressure is applied to the boiler.

§ 230.36 Hydrostatic testing of boilers.

(a) *Time of test*. The locomotive owner and/or operator shall hydrostatically test every boiler at the following times:

(1) During the 1472 service day inspection, and at every annual inspection thereafter;

(2) After making any alteration to the boiler;

(3) After installing a flush patch on an unstayed portion of the boiler; and

(4) After any riveting on an unstayed portion of the boiler.

(b) *Method of testing*. The metal temperature of the boiler shall be between 70 degrees Fahrenheit and 120 degrees Fahrenheit each time it is subjected to any hydrostatic pressure. Hydrostatic testing required by these rules shall be conducted at 25 percent above the MAWP.

(c) *Internal inspection*. An internal inspection of the boiler shall be conducted following any hydrostatic test where the pressure exceeds MAWP.

§ 230.37 Steam test following repairs or alterations.

Upon completion of any repair or alteration, the locomotive owner and/or operator shall conduct a steam test of the boiler with steam pressure raised to between 95 percent and 100 percent of the MAWP. At this time, the boiler shall be inspected to ensure that it is in a safe and suitable condition for service.

STAYBOLTS

§ 230.38 Telltale holes.

(a) *Staybolts less than 8 inches long*. All staybolts shorter than 8 inches, except flexible bolts, shall have telltale holes 3/16 inch to 7/32 inch diameter and at least 1¼ inches deep in the outer end.

(b) *Reduced body staybolts*. On reduced body staybolts, the telltale hole shall extend beyond the fillet and into the reduced section of the staybolt. Staybolts may have through telltale holes.

(c) *Telltale holes kept open*. All telltale holes, except as provided for in § 230.41, must be kept open at all times.

§ 230.39 Broken staybolts.

(a) *Maximum allowable number of broken staybolts*. No boiler shall be allowed to remain in service with two broken staybolts located within 24 inches of each other, as measured inside the firebox or combustion chamber on a straight line. No boiler shall be allowed to remain in service with more than 4 broken staybolts inside the entire firebox and combustion chamber, combined.

(b) *Staybolt replacement*. Broken staybolts must be replaced during the 31 service day inspection, if detected at that time. Broken staybolts detected in between 31 service day inspections must be replaced no later than 30 calendar days from the time of detection. When staybolts 8 inches or less in length are replaced, they shall be replaced with bolts that have telltale holes 3/16 inch to 7/32 inch in diameter and at least 1¼ inches deep at each end, or that have telltale holes 3/16 inch to 7/32 inch in diameter their entire length. At the time of replacement of broken staybolts, adjacent staybolts shall be inspected.

(c) *Assessment of broken staybolts*. Telltale holes leaking, plugged, or missing shall be counted as broken staybolts.

(d) *Prohibited methods of closing telltale holes*. Welding, forging, or riveting broken staybolt ends is prohibited as a method of closing telltale holes.

§ 230.40 Time and method of staybolt testing.

(a) *Time of hammer testing*—(1) General. All staybolts shall be hammer tested at every 31 service day inspection, except as provided in paragraph (a)(2) of this section. All staybolts also shall be hammer tested under hydrostatic pressure any time hydrostatic pressure above the MAWP specified on the boiler specification form (FRA Form No. 4), is applied to the boiler. (See appendix B of this part.)

(2) Exception for inaccessible staybolts. The removal of brickwork or grate bearers for the purpose of hammer testing staybolts during each 31 service day inspection will not be required if the staybolts behind these structural impediments have a telltale hole 3/16 inch to 7/32 inch in diameter their entire length. Whenever the brickwork or grate bearers are removed for any other reason, however, the bolts shall be inspected at that time.

(b) *Method of hammer testing.* If staybolts are tested while the boiler contains water, the hydrostatic pressure must be not less than 95 percent of the MAWP. The steam locomotive owner and/or operator shall tap each bolt with a hammer and determine broken bolts from the sound or the vibration of the sheet. Whenever staybolts are tested while the boiler is not under pressure, such as during the 31 service day inspection, the staybolt test must be made with all the water drained from the boiler.

§ 230.41 Flexible staybolts with caps.

(a) *General.* Flexible staybolts with caps shall have their caps removed during every 5th annual inspection for the purpose of inspecting the bolts for breakage, except as provided in paragraph (b) of this section.

(b) *Drilled flexible staybolts.* For flexible staybolts that have telltale holes between 3/16 inch and 7/32 inch in diameter, and which extend the entire length of the bolt and into the head not less than one third of the diameter of the head, the steam locomotive owner and/or operator need not remove the staybolt caps if it can be established, by an electrical or other suitable method, that the telltale holes are open their entire length. Any leakage from these telltale holes during the hydrostatic test indicates that the bolt is broken and must be replaced. Before the steam locomotive is placed in service, the inner ends of all telltale holes shall be closed with a fireproof porous material that will keep the telltale holes free of foreign matter and permit steam or water to exit the telltale hole when the bolt is broken or fractured.

(c) *Recordkeeping.* The removal of flexible staybolt caps and other tests shall be reported on FRA Form No. 3. (See appendix B of this part.)

(d) *Testing at request of FRA inspector.* Staybolt caps also shall be removed, or any of the tests in this section made, whenever the FRA inspector or the steam locomotive owner and/or operator considers it necessary due to identifiable safety concerns about the condition of staybolts, staybolt caps or staybolt sleeves.

STEAM GAUGES

§ 230.42 Location of gauges.

Every boiler shall have at least one steam gauge which will correctly indicate the working pressure. The gauge shall be positioned so that it will be kept reasonably cool and can conveniently be read by the engine crew.

§ 230.43 Gauge siphon.

The steam gauge supply pipe shall have a siphon on it of ample capacity to prevent steam from entering the gauge. The supply pipe shall directly enter the boiler and be maintained steam tight. The supply pipe and its connections shall be cleaned each time the gauge is tested.

§ 230.44 Time of testing.

Steam gauges shall be tested prior to being installed or being reapplied, during the 92 service day inspection, and whenever any irregularity is reported.

§ 230.45 Method of testing.

Steam gauges shall be compared with an accurate test gauge or dead weight tester. While under test load at the MAWP of the boiler to which the gauge will be applied, the gauge shall be set to read that pressure as accurately as the physical limitations of the gauge will allow. Under test the gauge shall read within the manufacturer's tolerance at all points on the gauge up to 25 percent above the allowed pressure. If the manufacturer's tolerance is not known, the gauge must read within 2 percent full scale accuracy at all points on the gauge up to 25 percent above allowed pressure.

§ 230.46 Badge plates.

A metal badge plate showing the allowed steam pressure shall be attached

to the boiler backhead in the cab. If boiler backhead is lagged, the lagging and jacket shall be cut away so that the plate can be seen.

§ 230.47 Boiler number.

(a) *Generally*. The builder's number of the boiler, if known, shall be stamped on the steam dome or manhole flange. If the builder's number cannot be obtained, an assigned number, which shall be used in making out specification cards, shall be stamped on the steam dome or manhole flange.

(b) *Numbers after January 10, 1912*. Numbers which are stamped after January 10, 1912 shall be located on the front side of the steam dome or manhole flange at the upper edge of the vertical surface, oriented in a horizontal manner, and have figures at least ⅜ inch high.

(c) *Name of manufacturer or owner*. The number shall be preceded by the name of the manufacturer if the original number is known or the name of the steam locomotive owner if a new number is assigned.

SAFETY RELIEF VALVES

§ 230.48 Number and capacity.

(a) *Number and capacity*. Every boiler shall be equipped with at least two safety relief valves, suitable for the service intended, that are capable of preventing an accumulation of pressure greater than 6 percent above the MAWP under any conditions of service. An FRA inspector may require verification of sufficient safety valve relieving capacity.

(b) *Determination of capacity*. Safety relief valve capacity may be determined by making an accumulation test with the fire in good, bright condition and all steam outlets closed. Additional safety relief valve capacity shall be provided if the safety relief valves allow an excess pressure of more than 6 percent above the MAWP during this test.

§ 230.49 Setting of safety relief valves.

(a) *Qualifications of individual who adjusts*. Safety relief valves shall be set and adjusted by a competent person who is thoroughly familiar with the construction and operation of the valve being set.

(b) *Opening pressures*. At least one safety relief valve shall be set to open at a pressure not exceeding the MAWP. Safety relief valves shall be set to open at pressures not exceeding 6 psi above the MAWP.

(c) *Setting procedures*. When setting safety relief valves, two steam gauges shall be used, one of which must be so located that it will be in full view of the persons engaged in setting such valves; and if the pressure indicated by the gauges varies more than 3 psi they shall be removed from the boiler, tested, and corrected before the safety relief valves are set. Gauges shall in all cases be tested immediately before the safety relief valves are set or any change made in the setting. When setting safety relief valves, the water level shall not be higher than ¾ of the length of the visible water glass, as measured from the bottom of the glass.

(d) *Labeling of lowest set pressure*. The set pressure of the lowest safety relief valve shall be indicated on a tag or label attached to the steam gauge so that it may be clearly read while observing the steam gauge.

§ 230.50 Time of testing.

All safety relief valves shall be tested, and adjusted if necessary, under steam at every 92 service day inspection, and also whenever any irregularity is reported.

WATER GLASSES AND GAUGE COCKS

§ 230.51 Number and location.

Every boiler shall be equipped with at least two water glasses. The lowest reading of the water glasses shall not be less than 3 inches above the highest part of the crown sheet. If gauge cocks are used, the reading of the lowest gauge cock shall not be less than 3 inches above the highest part of the crown sheet.

§ 230.52 Water glass valves.

All water glasses shall be equipped with no more than two valves capable of isolating the water glass from the boiler. They shall also be equipped with a drain valve capable of evacuating the glass when it is so isolated.

§ 230.53 Time of cleaning.

The spindles of all water glass valves and of all gauge cocks shall be removed and valves and cocks thoroughly cleaned of scale and sediment at every 31 service day inspection, and when testing indicates that the apparatus may be malfunctioning. In addition, the top and bottom passages of the water column shall be cleaned and inspected at each annual inspection.

§ 230.54 Testing and maintenance.

(a) *Testing*. All water glasses must be blown out, all gauge cocks must be tested, and all passages verified to be open at the beginning of each day the locomotive is used, and as often as necessary to ensure proper functioning.

(b) *Maintenance*. Gauge cocks, water column drain valves, and water glass valves must be maintained in such condition that they can easily be opened and closed by hand, without the aid of a wrench or other tool.

§ 230.55 Tubular type water and lubricator glasses and shields.

(a) *Water glasses*. Tubular type water glasses shall be renewed at each 92 service day inspection.

(b) *Shields*. All tubular water glasses and lubricator glasses must be equipped with a safe and suitable shield which will prevent the glass from flying in case of breakage. This shield shall be properly maintained.

(c) *Location and maintenance*. Water glasses and water glass shields shall be so located, constructed, and maintained that the engine crew can at all times have an unobstructed view of the water in the glass from their proper positions in the cab.

§ 230.56 Water glass lamps.

All water glasses must be supplied with a suitable lamp properly located to enable the engine crew to easily see the water in the glass.

INJECTORS, FEEDWATER PUMPS, AND FLUE PLUGS

§ 230.57 Injectors and feedwater pumps.

(a) *Water delivery systems required*. Each steam locomotive must be equipped with at least two means of delivering water to the boiler, at least one of which is a live steam injector.

(b) *Maintenance and testing*. Injectors and feedwater pumps must be kept in good condition, free from scale, and must be tested at the beginning of each day the locomotive is used, and as often as conditions require, to ensure that they are delivering water to the boiler. Boiler checks, delivery pipes, feed water pipes, tank hose and tank valves must be kept in good condition, free from leaks and from foreign substances that would obstruct the flow of water.

(c) *Bracing*. Injectors, feedwater pumps, and all associated piping shall be securely braced so as to minimize vibration.

§ 230.58 Flue plugs.

(a) *When plugging is permitted*. Flues greater than 2¼ inches in outside diameter (OD) shall not be plugged. Flues 2¼ inches in outside diameter (OD) or smaller may be plugged following failure, provided only one flue is plugged at any one time. Plugs must be removed and proper repairs made no later than 30 days from the time the plug is applied.

(b) *Method of plugging*. When used, flue plugs must be made of steel. The flue must be plugged at both ends. Plugs must be tied together by means of a steel rod not less than ⅝ inch in diameter.

FUSIBLE PLUGS

§ 230.59 Fusible plugs.

If boilers are equipped with fusible plugs, the plugs shall be removed and cleaned of scale each time the boiler is washed but not less frequently than during every 31 service day inspection. Their removal shall be noted on the FRA Form No. 1 or FRA Form No. 3. (See appendix B of this part.)

WASHING BOILERS

§ 230.60 Time of washing.

(a) *Frequency of washing*. All boilers shall thoroughly be washed as often as the water conditions require, but not less frequently than at each 31 service day inspection. The date of the boiler wash shall be noted on the FRA Form

No. 1 or FRA Form No. 3. (See appendix B of this part.)

(b) *Plug removal.* All washout plugs, arch tube plugs, thermic siphon plugs, circulator plugs and water bar plugs must be removed whenever locomotive boilers are washed.

(c) *Plug maintenance.* All washout plugs, washout plug sleeves and threaded openings shall be maintained in a safe and suitable condition for service and shall be examined for defects each time the plugs are removed.

(d) *Fusible plugs cleaned.* Fusible plugs shall be cleaned in accordance with § 230.59.

§ 230.61 Arch tubes, water bar tubes, circulators and thermic siphons.

(a) *Frequency of cleaning.* Each time the boiler is washed, arch tubes and water bar tubes shall thoroughly be cleaned mechanically, washed, and inspected. Circulators and thermic siphons shall thoroughly be cleaned, washed and inspected.

(b) *Defects.* Arch tubes and water bar tubes found blistered, bulged, or otherwise defective shall be renewed. Circulators and thermic siphons found blistered, bulged or otherwise defective shall be either repaired or renewed.

(c) *Method of examination.* Arch tubes, water bar tubes and circulators shall be examined using an appropriate NDE method that accurately measures wall thickness at each annual inspection. All arch brick shall be removed for this inspection. If any are found with wall thickness reduced below that required to render them safe and suitable for the service intended at the MAWP specified on the boiler specification FRA Form No. 4, they must be replaced or repaired. (See appendix B of this part.)

STEAM PIPES

§ 230.62 Dry pipe.

Dry pipes subject to pressure shall be examined at each annual inspection to measure wall thickness. Dry pipes with wall thickness reduced below that required to render the pipe suitable for the service intended at the MAWP must be replaced or repaired.

§ 230.63 Smoke box, steam pipes and pressure parts.

The smoke box, steam pipes and pressure parts shall be inspected at each annual inspection, or any other time that conditions warrant. The individual conducting the inspection must enter the smoke box to conduct the inspection, looking for signs of leaks from any of the pressure parts therein and examining all draft appliances.

STEAM LEAKS

§ 230.64 Leaks under lagging.

The steam locomotive owner and/or operator shall take out of service at once any boiler that has developed a leak under the lagging due to a crack in the shell, or to any other condition which may reduce safety. Pursuant to § 230.29, the boiler must be repaired before being returned to service.

§ 230.65 Steam blocking view of engine crew.

The steam locomotive owner and/or operator shall keep the boiler, and its piping and appurtenances, in such repair that they do not emit steam in a manner that obscures the engine crew's vision.

Subpart C—Steam Locomotives and Tenders

§ 230.66 Design, construction, and maintenance.

The steam locomotive owner and operator are responsible for the general design, construction and maintenance of the steam locomotives and tenders under their control.

§ 230.67 Responsibility for inspection and repairs.

The steam locomotive owner and/or operator shall inspect and repair all steam locomotives and tenders under their control. All defects disclosed by any inspection shall be repaired in accordance with accepted industry standards, which may include established railroad practices, before the steam locomotive or tender is returned to service. The steam locomotive owner and/or operator shall not return the steam locomotive or tender to service unless

they are in good condition and safe and suitable for service.

SPEED INDICATORS

§ 230.68 Speed indicators.

Steam locomotives that operate at speeds in excess of 20 miles per hour over the general system of railroad transportation shall be equipped with speed indicators. Where equipped, speed indicators shall be maintained to ensure accurate functioning.

ASH PANS

§ 230.69 Ash pans.

Ash pans shall be securely supported from mud-rings or frames with no part less than 2½ inches above the rail. Their operating mechanism shall be so arranged that they may be safely operated and securely closed.

BRAKE AND SIGNAL EQUIPMENT

§ 230.70 Safe condition.

(a) *Pre-departure inspection*. At the beginning of each day the locomotive is used, the steam locomotive operator shall ensure that:

(1) The brakes on the steam locomotive and tender are in safe and suitable condition for service;

(2) The air compressor or compressors are in condition to provide an ample supply of air for the locomotive service intended;

(3) The devices for regulating all pressures are properly performing their functions;

(4) The brake valves work properly in all positions; and

(5) The water has been drained from the air-brake system.

(b) *Brake pipe valve required*. Each steam locomotive shall have a brake pipe valve attached to the front of the tender, the rear of the back cab wall, or adjacent to the exit of a vestibuled cab. The words ''Emergency Brake Valve'' shall be clearly displayed near the valve.

§ 230.71 Orifice testing of compressors.

(a) *Frequency of testing*. The compressor or compressors shall be tested for capacity by orifice test as often as conditions may require, but not less frequently than once every 92 service days.

(b) *Orifice testing criteria*. (1) Compressors in common use, as listed in the following table, shall have orifice test criteria as follows:

Make	Compressor size	Single strokes per minute	Diameter of orifice (in inches)	Air pressure maintained (in pounds)
Westinghouse	9½	120	11/64	60
Westinghouse	11	100	3/16	60
Westinghouse	150 CFM 8½ CC	100	9/32	60
Westinghouse	120 CFM 8½	100	15/64	60
New York	2a	120	5/32	60
New York	6a	100	13/64	60
New York	5b	100	15/64	60

NOTE: This table shall be used for altitudes to and including 1,000 feet. For altitudes over 1,000 feet the speed of compressor may be increased 5 single strokes per minute for each 1,000 feet increase in altitude.

(2) For compressors not listed in the table in paragraph (b)(1) of this section, the air pressure to be maintained shall be no less than 80 percent of the manufacturer's rated capacity for the compressor.

§ 230.72 Testing main reservoirs.

(a) *Hammer and hydrostatic testing*. Except as described in paragraphs (b) through (d) of this section, every main reservoir, except those cast integrally with the frame, shall be hammer and hydrostatically tested during each annual inspection. The reservoir shall be hammer tested while empty and with no pressure applied. If no defective areas are detected, a hydrostatic test of MAWP shall be applied.

(b) *Drilling of main reservoirs*. (1) Only welded main reservoir originally constructed to withstand at least five times the MAWP may be drilled over its entire surface with telltale holes that are 3/16 of an inch in diameter. The

holes shall be spaced not more than 12 inches apart, measured both longitudinally and circumferentially, and drilled from the outer surface to an extreme depth determined by the following formula:

$$D = (.6PR/(S - .6P))$$

Where:

D = Extreme depth of telltale holes in inches but in no case less than one-sixteenth inch;
P = certified working pressure in psi;
S = ⅕ of the minimum specified tensile strength of the material in psi; and
R = inside radius of the reservoir in inches.

(2) One row of holes shall be drilled lengthwise of the reservoir on a line intersecting the drain opening. When main reservoirs are drilled as described in paragraph (b)(1) of this section, the hydrostatic and hammer tests described in paragraph (a) of this section are not required during the annual inspection. Whenever any telltale hole shall have penetrated the interior of any reservoir, the reservoir shall be permanently withdrawn from service.

(c) *Welded main reservoirs without longitudinal lap seams.* For welded main reservoirs that do not have longitudinal lap seams, an appropriate NDE method that can measure the wall thickness of the reservoir may be used instead of the hammer test and hydrostatic test required in paragraph (a) of this section. The spacing of the sampling points for wall thickness shall not be greater than 12 inches longitudinally and circumferentially. The reservoir shall permanently be withdrawn from service where the NDE testing reveals wall thickness less than the value determined by the following formula:

$$t = (PR/(S - .6P)$$

Where:

t = Minimum value for wall thickness;
P = Certified working pressure in psi;
S = ⅕ of the minimum specified tensile strength of the material in psi, or 10,000 psi if the tensile strength is unknown; and
R = Inside radius of the reservoir in inches.

(d) *Welded or riveted longitudinal lap seam main reservoirs.* (1) For welded or riveted longitudinal lap seam main reservoirs, an appropriate NDE method that can measure wall thickness of the reservoir shall be used instead of, or in addition to, the hammer test and hydrostatic test. The spacing of the sampling points for wall thickness shall not be greater than 12 inches longitudinally and circumferentially. Particular care shall be taken to measure along the longitudinal seam on both plates at an interval of no more than 6 inches longitudinally. The reservoir shall be withdrawn permanently from service where NDE testing reveals wall thickness less than the value determined by the following formula:

$$t = (PR/(0.5S - 0.6P))$$

Where:

t = Minimum value for wall thickness;
P = Certified working pressure in psi;
S = ⅕ of the minimum specified tensile strength of the material in psi, or 10,000 psi if the tensile strength of steel is unknown; and
R = Inside radius of the reservoir in inches.

(2) Repairs of reservoirs with reduced wall thickness are prohibited.

§ 230.73 Air gauges.

(a) *Location.* Air gauges shall be so located that they may be conveniently read by the engineer from his or her usual position in the cab. No air gauge may be more than 3 psi in error.

(b) *Frequency of testing.* Air gauges shall be tested prior to reapplication following removal, as well as during the 92 service day inspection and whenever any irregularity is reported.

(c) *Method of testing.* Air gauges shall be tested using an accurate test gauge or dead weight tester designed for this purpose.

§ 230.74 Time of cleaning.

All valves in the air brake system, including related dirt collectors and filters, shall be cleaned and tested in accordance with accepted brake equipment manufacturer's specifications, or as often as conditions require to maintain them in a safe and suitable condition for service, but not less frequently than after 368 service days or during the second annual inspection, whichever occurs first.

§ 230.75 Stenciling dates of tests and cleaning.

The date of testing and cleaning and the initials of the shop or station at

which the work is done, shall legibly be stenciled in a conspicuous place on the tested parts or placed on a card displayed under a transparent cover in the cab of the steam locomotive.

§ 230.76 Piston travel.

(a) *Minimum piston travel.* The minimum piston travel shall be sufficient to provide proper brake shoe clearance when the brakes are released.

(b) *Maximum piston travel.* The maximum piston travel when steam locomotive is standing shall be as follows:

Type of wheel brake	Maximum piston travel (in inches)
Cam Type Driving Wheel Brake	3½
Other forms of Driving Wheel Brake	6
Engine Truck Brake	8
Tender Brake	9

§ 230.77 Foundation brake gear.

(a) *Maintenance.* Foundation brake gear shall be maintained in a safe and suitable condition for service. Levers, rods, brake beams, hangers, and pins shall be of ample strength, and shall not be fouled in any way which will affect the proper operation of the brake. All pins shall be properly secured in place with cotter pine, split keys, or nuts. Brake shoes must be properly applied and kept approximately in line with the tread of the wheel.

(b) *Distance above the rails.* No part of the foundation brake gear of the steam locomotive or tender shall be less than 2½ inches above the rails.

§ 230.78 Leakage.

(a) *Main reservoirs and related piping.* Leakage from main reservoir and related piping shall be tested at every 92 service day inspection and shall not exceed an average of 3 psi per minute in a test of 3 minutes duration that is made after the pressure has been reduced to 60 percent of the maximum operating pressure.

(b) *Brake cylinders.* Leakage from brake cylinders shall be tested at every 92 service day inspection. With a full service application from maximum brake pipe pressure, and with communication to the brake cylinders closed, the brakes on the steam locomotive and tender must remain applied for a minimum of 5 minutes.

(c) *Brake pipes.* Steam locomotive brake pipe leakage shall be tested at the beginning of each day the locomotive is used, and shall not exceed 5 psi per minute.

§ 230.79 Train signal system.

Where utilized, the train signal system, or any other form of on-board communication, shall be tested and known to be in safe and suitable condition for service at the beginning of each day the locomotive is used.

CABS, WARNING SIGNALS, SANDERS AND LIGHTS

§ 230.80 Cabs.

(a) *General provisions.* Cabs shall be securely attached or braced and maintained in a safe and suitable condition for service. Cab windows of steam locomotives shall provide an undistorted view of the track and signals for the crew from their normal position in the cab. Cab floors shall be kept free of tripping or slipping hazards. The cab climate shall be maintained to provide an environment that does not unreasonably interfere with the engine crew's performance of their duties under ordinary conditions of service.

(b) *Steam pipes.* Steam pipes shall not be fastened to the cab. New construction or renewals made of iron or steel pipe greater than ⅛ inch NPS that are subject to boiler pressure in cabs shall have a minimum wall thickness equivalent to schedule 80 pipe, with properly rated valves and fittings. Live steam heating radiators must not be fastened to the cab. Exhaust steam radiators may be fastened to the cab.

(c) *Oil-burning steam locomotives.* If the cab is enclosed, oil burning steam locomotives that take air for combustion through the fire-door opening shall have a suitable conduit extending from the fire-door to the outside of the cab.

§ 230.81 Cab aprons.

(a) *General provisions.* Cab aprons shall be of proper length and width to ensure safety. Cab aprons shall be securely hinged, maintained in a safe and suitable condition for service, and roughened, or other provision made, to afford secure footing.

(b) *Width of apron.* The cab apron shall be of a sufficient width to prevent, when the drawbar is disconnected and the safety chains or the safety bars are taut, the apron from dropping between the steam locomotive and tender.

§ 230.82 Fire doors.

(a) *General provisions.* Each steam locomotive shall have a fire door which shall latch securely when closed and which shall be maintained in a safe and suitable condition for service. Fire doors on all oil-burning locomotives shall be latched securely with a pin or key.

(b) *Mechanically operated fire doors.* Mechanically operated fire doors shall be so constructed and maintained that they may be operated by pressure of the foot on a pedal, or other suitable appliance, located on the floor of the cab or tender at a suitable distance from the fire door, so that they may be conveniently operated by the person firing the steam locomotive.

(c) *Hand-operated doors.* Hand operated fire doors shall be so constructed and maintained that they may be conveniently operated by the person firing the steam locomotive.

§ 230.83 Cylinder cocks.

Each steam locomotive shall be equipped with cylinder cocks which can be operated from the cab of the steam locomotive. All cylinder cocks shall be maintained in a safe and suitable condition for service.

§ 230.84 Sanders.

Steam locomotives shall be equipped with operable sanders that deposit sand on the rail head in front of a set of driving wheels. Sanders shall be tested at the beginning of each day the locomotive is used.

§ 230.85 Audible warning device.

(a) *General provisions.* Each steam locomotive shall be equipped with an audible warning device that produces a minimum sound level of 96db(A) at 100 feet in front of the steam locomotive in its direction of travel. The device shall be arranged so that it may conveniently be operated by the engineer from his or her normal position in the cab.

(b) *Method of measurement.* Measurement of the sound level shall be made using a sound level meter conforming, at a minimum, to the requirements of ANSI S1.4–1971, Type 2, and set to an A-weighted slow response. While the steam locomotive is on level, tangent track, the microphone shall be positioned 4 feet above the ground at the center line of the track and shall be oriented with respect to the sound source in accordance with the microphone manufacturer's recommendations.

§ 230.86 Required illumination.

(a) *General provisions.* Each steam locomotive used between sunset and sunrise shall be equipped with an operable headlight that provides illumination sufficient for a steam locomotive engineer in the cab to see, in a clear atmosphere, a dark object as large as a man of average size standing at least 800 feet ahead and in front of such headlight. If a steam locomotive is regularly required to run backward for any portion of its trip other than to pick up a detached portion of its train or to make terminal movements, it shall also be equipped on its rear end with an operable headlight that is capable of providing the illumination described in this paragraph (a).

(b) *Dimming device.* Such headlights shall be provided with a device whereby the light from same may be diminished in yards and at stations or when meeting trains.

(c) *Where multiple locomotives utilized.* When two or more locomotives are used in the same train, the leading locomotive only will be required to display a headlight.

§ 230.87 Cab lights.

Each steam locomotive shall have cab lights that sufficiently illuminate the control instruments, meters and gauges to allow the engine crew to make accurate readings from their usual and proper positions in the cab. These lights shall be so located and constructed that the light will shine only on those parts requiring illumination and does not interfere with the engine crew's vision of the track and signals. Each steam locomotive shall also have a conveniently located additional

lamp that can be readily turned on and off by the persons operating the steam locomotive and that provides sufficient illumination to read train orders and timetables.

THROTTLES AND REVERSING GEAR

§ 230.88 Throttles.

Throttles shall be maintained in safe and suitable condition for service, and efficient means shall be provided to hold the throttle lever in any desired position.

§ 230.89 Reverse gear.

(a) *General provisions.* Reverse gear, reverse levers, and quadrants shall be maintained in a safe and suitable condition for service. Reverse lever latch shall be so arranged that it can be easily disengaged, and provided with a spring which will keep it firmly seated in quadrant. Proper counterbalance shall be provided for the valve gear.

(b) *Air-operated power reverse gear.* Steam locomotives that are equipped with air operated power reverse gear shall be equipped with a connection whereby such gear may be operated by steam or by an auxiliary supply of air in case of failure of the main reservoir air pressure. The operating valve handle for such connection shall be conveniently located in the cab of the locomotive and shall be plainly marked. If an independent air reservoir is used as the source of the auxiliary supply for the reverse gear, it shall be provided with means to automatically prevent loss of pressure in event of failure of the main reservoir air pressure.

(c) *Power reverse gear reservoirs.* Power reverse gear reservoirs, if provided, must be equipped with the means to automatically prevent the loss of pressure in the event of a failure of main air pressure and have storage capacity for not less than one complete operating cycle of control equipment.

DRAW GEAR AND DRAFT SYSTEMS

§ 230.90 Draw gear between steam locomotive and tender.

(a) *Maintenance and testing.* The draw gear between the steam locomotive and tender, together with the pins and fastenings, shall be maintained in safe and suitable condition for service. The pins and drawbar shall be removed and tested for defects using an appropriate NDE method at every annual inspection. Where visual inspection does not disclose any defects, an additional NDE testing method shall be employed. Suitable means for securing the drawbar pins in place shall be provided. Inverted drawbar pins shall be held in place by plate or stirrup.

(b) *Safety bars and chains generally.* One or more safety bar(s) or two or more safety chains shall be provided between the steam locomotive and tender. The combined strength of the safety chains or safety bar(s) and their fastenings shall be not less than 50 percent of the strength of the drawbar and its connections. These shall be maintained in safe and suitable condition for service, and inspected at the same time draw gear is inspected.

(c) *Minimum length of safety chains or bars.* Safety chains or safety bar(s) shall be of the minimum length consistent with the curvature of the railroad on which the steam locomotive is operated.

(d) *Lost motion.* Lost motion between steam locomotives and tenders not equipped with spring buffers shall be kept to a minimum and shall not exceed ½ inch.

(e) *Spring buffers.* When spring buffers are used between steam locomotives and tenders the spring shall be applied with not less than ¾ inch compression, and shall at all times be under sufficient compression to keep the chafing faces in contact.

§ 230.91 Chafing irons.

Chafing irons that permit proper curving shall be securely attached to the steam locomotive and tender, and shall be maintained to permit lateral and vertical movement.

§ 230.92 Draw gear and draft systems.

Couplers, draft gear and attachments on steam locomotives and tenders shall be securely fastened, and maintained in safe and suitable condition for service.

DRIVING GEAR

§ 230.93 Pistons and piston rods.

(a) *Maintenance and testing*. Pistons and piston rods shall be maintained in safe and suitable condition for service. Piston rods shall be inspected for cracks each time they are removed, and shall be renewed if found defective.

(b) *Fasteners*. Fasteners (keys, nuts, etc.) shall be kept tight and shall have some means to prevent them from loosening or falling out of place.

§ 230.94 Crossheads.

Crossheads shall be maintained in a safe and suitable condition for service, with not more than ¼ inch vertical or 5⁄16 inch lateral clearance between crossheads and guides.

§ 230.95 Guides.

Guides shall be securely fastened and maintained in a safe and suitable condition for service.

§ 230.96 Main, side, and valve motion rods.

(a) *General*. Main, side or valve motion rods developing cracks or becoming otherwise defective shall be removed from service immediately and repaired or renewed.

(b) *Repairs*. Repairs, and welding of main, side or valve motion rods shall be made in accordance with an accepted national standard. The steam locomotive owner and/or operator shall submit a written request for approval to the FRA Regional Administrator prior to welding defective main rods, side rods, and valve gear components.

(c) *Bearings and bushings*. Bearings and bushings shall so fit the rods as to be in a safe and suitable condition for service, and means shall be provided to prevent bushings from turning in the rod. Straps shall fit and be securely bolted to rods. Floating bushings need not be provided with means to prevent bushings from turning.

(d) *Side motion of rods*. The total amount of side motion of each rod on its crank pin shall not exceed ¼ inch.

(e) *Oil and grease cups*. Oil and grease cups shall be securely attached to rods, and grease cup plugs shall be equipped with a suitable fastening that will prevent them from being ejected.

(f) *Main rod bearings*. The bore of main rod bearings shall not exceed pin diameters more than 3⁄32 inch at front or back end. The total lost motion at both ends shall not exceed 5⁄32 inch.

(g) *Side rod bearings*. The bore of side rod bearings shall not exceed pin diameters more than 5⁄32 inch on main pin nor more than 3⁄16 inch on other pins.

§ 230.97 Crank pins.

(a) *General provisions*. Crank pins shall be securely applied. Securing the fit of a loose crank pin by shimming, prick punching, or welding is not permitted.

(b) *Maintenance*. Crank pin collars and collar fasteners shall be maintained in a safe and suitable condition for service.

RUNNING GEAR

§ 230.98 Driving, trailing, and engine truck axles.

(a) *Condemning defects*. Driving, trailing, and engine truck axles with any of the following defects shall be removed from service immediately and repaired (see appendix A of this part for inspection requirements):

(1) Bent axle;

(2) Cut journals that cannot be made to run cool without turning;

(3) Transverse seams in iron or steel axles;

(4) Seams in axles causing journals to run hot;

(5) Axles that are unsafe on account of usage, accident or derailment;

(6) Any axle worn ½ inch or more in diameter below the original/new journal diameter, except as provided in paragraph (a)(7) of this section;

(7) Any driving axles other than main driving axles with an original or new diameter greater than 6 inches that are worn ¾ inch or more in diameter below the original/new diameter.

(b) *Journal diameter stamped*. For steam locomotives with plain bearings, the original/new journal diameter shall be stamped on one end of the axle no later than January 18, 2005.

§ 230.99 Tender truck axles.

The minimum diameters of axles for various axle loads shall be as follows:

Axle load (in pounds)	Minimum diameter of journal (in inches)	Minimum diameter of wheel seat (in inches)	Minimum diameter of center (in inches)
50000	5½	7⅜	6⁷⁄₁₆
38000	5	6¾	5⅞
31000	4½	6¼	5⁵⁄₁₆
22000	3¾	5	4⅜
15000	3¼	4⅝	3⅞

§ 230.100 Defects in tender truck axles and journals.

(a) *Tender truck axle condemning defects.* Tender truck axles with any of the following defects shall be removed from service immediately and repaired:

(1) Axles that are bent;

(2) Collars that are broken, cracked, or worn to ¼ inch or less in thickness;

(3) Truck axles that are unsafe on account of usage, accident, or derailment;

(4) A fillet in the back shoulder that is worn out; or

(5) A gouge between the wheel seats that is more than ⅛ of an inch in depth.

(b) *Tender truck journal condemning defects.* Tender truck journals with any of the following defects shall be removed from service immediately and repaired :

(1) Cut journals that cannot be made to run cool without turning;

(2) Seams in axles causing journals to run hot;

(3) Overheating, as evidenced by pronounced blue black discoloration;

(4) Transverse seams in journals of iron or steel axles; or

(5) Journal surfaces having any of the following:

(i) A circumferential score;

(ii) Corrugation;

(iii) Pitting;

(iv) Rust;

(v) Etching.

§ 230.101 Steam locomotive driving journal boxes.

(a) *Driving journal boxes.* Driving journal boxes shall be maintained in a safe and suitable condition for service. Not more than one shim may be used between the box and bearing.

(b) *Broken bearings.* Broken bearings shall be renewed.

(c) *Loose bearings.* Loose bearings shall be repaired or renewed.

§ 230.102 Tender plain bearing journal boxes.

Plain bearing journal boxes with the following defects shall be removed from service immediately and repaired:

(a) A box that does not contain visible free oil;

(b) A box lid that is missing, broken, or open except to receive servicing;

(c) A box containing foreign matter, such as dirt, sand, or coal dust that can reasonably be expected to damage the bearing; or have a detrimental effect on the lubrication of the journal and bearing;

(d) A lubricating pad that:

(1) Is missing;

(2) Is not in contact with the journal;

(3) Has a tear extending half the length or width of the pad, or more, except by design;

(4) Shows evidence of having been scorched, burned, or glazed;

(5) Contains decaying or deteriorated fabric that impairs proper lubrication of the pad;

(6) Has an exposed center core (except by design); or

(7) Has metal parts contacting the journal;

(e) A plain bearing that:

(1) Is missing, cracked, broken;

(2) Has a bearing liner loose;

(3) Has a broken out piece; or

(4) Has indications of having been overheated, as evidenced by:

(i) Melted babbitt:

(ii) Smoke from hot oil; or

(iii) Journal surface damage; or

(f) A plain bearing wedge that:

(1) Is missing, cracked or broken; or

(2) Is not located in its design position.

§ 230.103 Tender roller bearing journal boxes.

Tender roller bearing journal boxes shall be maintained in a safe and suitable condition.

§ 230.104 Driving box shoes and wedges.

Driving box shoes and wedges shall be maintained in a safe and suitable condition for service.

§ 230.105 Lateral motion.

(a) *Condemning limits.* The total lateral motion or play between the hubs of the wheels and the boxes on any pair of wheels shall not exceed the following limits:

	Inches
Engine truck wheels (with swing centers)	1
Engine truck wheels (with rigid centers)	1½
Trailing truck wheels	1
Driving wheels	¾

(b) *Limits increased.* These limits may be increased on steam locomotives operating on track where the curvature exceeds 20 degrees when it can be shown that conditions require additional lateral motion.

(c) *Non-interference with other parts.* The lateral motion shall in all cases be kept within such limits that the driving wheels, rods, or crank pins will not interfere with other parts of the steam locomotive.

TRUCKS, FRAMES AND EQUALIZING SYSTEM

§ 230.106 Steam locomotive frame.

(a) *Maintenance and inspection.* Frames, decks, plates, tailpieces, pedestals, and braces shall be maintained in a safe and suitable condition for service, and shall be cleaned and thoroughly inspected as often as necessary to maintain in a safe and suitable condition for service with cleaning intervals, in any case, not to exceed every 1472 service days.

(b) *Broken frames.* Broken frames properly patched or secured by clamps or other suitable means which restores the rigidity of the frame are permitted.

§ 230.107 Tender frame and body.

(a) *Maintenance.* Tender frames shall be maintained in a safe and suitable condition for service.

(b) *Height difference.* The difference in height between the deck on the tender and the cab floor or deck on the steam locomotive shall not exceed 1½ inches.

(c) *Gangway minimum width.* The minimum width of the gangway between steam locomotive and tender, while standing on tangent track, shall be 16 inches.

(d) *Tender frame condemning defects.* A tender frame with any of the following defects shall be removed from service immediately and repaired:

(1) Portions of the tender frame or body (except wheels) that have less than a 2½ inches clearance from the top of rail;

(2) Tender center sill that is broken, cracked more than 6 inches, or permanently bent or buckled more than 2½ inches in any six foot length;

(3) Tender coupler carrier that is broken or missing;

(4) Tender center plate, any portion of which is missing or broken or that is not properly secured; or

(5) Tender that has a broken side sill, crossbearer, or body bolster.

§ 230.108 Steam locomotive leading and trailing trucks.

(a) *Maintenance.* Trucks shall be maintained in safe and suitable condition for service. Center plates shall fit properly, and the male center plate shall extend into the female center plate not less than ¾ inch. All centering devices shall be properly maintained and shall not permit lost motion in excess of ½ inch.

(b) *Safety chain required.* A suitable safety chain shall be provided at each front corner of all four wheel engine trucks.

(c) *Clearance required.* All parts of trucks shall have sufficient clearance to prevent them from interfering with any other part of the steam locomotive.

§ 230.109 Tender trucks.

(a) *Tender truck frames.* A tender truck frame shall not be broken, or have a crack in a stress area that affects its structural integrity. Tender

truck center plates shall be securely fastened, maintained in a safe and suitable condition for service, and provided with a center pin properly secured. The male center plate must extend into the female center plate at least ¾ inch. Shims may be used between truck center plates.

(b) *Tender truck bolsters.* Truck bolsters shall be maintained approximately level.

(c) *Condemning defects for springs or spring rigging.* Springs or spring rigging with any of the following defects shall be taken out of service immediately and renewed or properly repaired:

(1) An elliptical spring with its top (long) leaf or any other five leaves in the entire spring pack broken;

(2) A broken coil spring or saddle;

(3) A coil spring that is fully compressed;

(4) A broken or cracked equalizer, hanger, bolt, gib or pin;

(5) A broken coil spring saddle; and

(6) A semi-elliptical spring with a top (long) leaf broken or two leaves in the top half broken, or any three leaves in the entire spring broken.

(d) *Tender securing arrangement.* Where equipped, tender devices and/or securing arrangements intended to prevent the truck and tender body from separating in case of derailment shall be maintained in a safe and suitable condition for service.

(e) *Side bearings and truck centering devices.* Where equipped, side bearings and truck centering devices shall be maintained in a safe and suitable condition for service.

(f) *Friction side bearings.* Friction side bearings shall not be run in contact, and shall not be considered to be in contact if there is clearance between them on either side when measured on tangent level track.

(g) *Side bearings.* All rear trucks shall be equipped with side bearings. When the spread of side bearings is 50 inches, their maximum clearance shall be ⅜ inch on each side for rear trucks and ¾ inch on each side for front trucks, where used. When the spread of the side bearings is increased, the maximum clearance shall be increased proportionately.

§ 230.110 Pilots.

(a) *General provisions.* Pilots shall be securely attached, properly braced, and maintained in a safe and suitable condition for service.

(b) *Minimum and maximum clearance.* The minimum clearance of pilot above the rail shall be 3 inches and the maximum clearance shall be 6 inches measured on tangent level track.

§ 230.111 Spring rigging.

(a) *Arrangement of springs and equalizers.* Springs and equalizers shall be arranged to ensure the proper distribution of weight to the various wheels of the steam locomotive, maintained approximately level and in a safe and suitable condition for service. Adjusting weights by shifting weights from one pair of wheels to another is permissible.

(b) *Spring or spring rigging condemning defects.* Springs or spring rigging with any of the following defects shall be removed from service immediately and renewed or properly repaired:

(1) Top leaf broken or two leaves in top half or any three leaves in spring broken. (The long side of a spring to be considered the top.) Broken springs not exceeding these requirements may be repaired by applying clips providing the clips can be made to remain in place;

(2) Any spring with leaves excessively shifting in the band;

(3) Broken coil springs; or

(4) Broken driving box saddle, equalizer, hanger, bolt, or pin.

WHEELS AND TIRES

§ 230.112 Wheels and tires.

(a) *Mounting.* Wheels shall be securely mounted on axles. Prick punching or shimming the wheel fit will not be permitted. The diameter of wheels on the same axle shall not vary more than 3/32 inch.

(b) *Gage.* Wheels used on standard gage track will be out of gage if the inside gage of flanges, measured on base line is less than 53 inches or more than 53⅜ inches. Wheels used on less than standard gage track will be out of gage if the inside gage of flanges, measured on base line, is less than the relevant

track gage less 3½ inches or more than the relevant track gage less 3⅛ inches.

(c) *Flange distance variance*. The distance back to back of flanges of wheels mounted on the same axle shall not vary more than ¼ inch.

(d) *Tire thickness*. Wheels may not have tires with a minimum thickness less than that indicated in the table in this paragraph (d). When retaining rings are used, measurements of tires to be taken from the outside circumference of the ring, and the minimum thickness of tires may be as much below the limits specified earlier in this paragraph (d) as the tires extend between the retaining rings, provided it does not reduce the thickness of the tire to less than 1⅛ inches from the throat of flange to the counterbore for the retaining rings. The required minimum thickness for tires, by wheel center diameter and weight per axle, is as follows:

Weight per axle (weight on drivers divided by number of pairs of driving wheels)	Diameter of wheel center (inches)	Minimum thickness (inches)
30,000 pounds and under	44 and under	1¼
	Over 44 to 50	1 5/16
	Over 50 to 56	1⅜
	Over 56 to 62	1 7/16
	Over 62 to 68	1½
	Over 68 to 74	1 9/16
	Over 74	1⅝
Over 30,000 to 35,000 pounds	44 and under	1 5/16
	Over 44 to 50	1⅜
	Over 50 to 56	1 7/16
	Over 56 to 62	1½
	Over 62 to 68	1 9/16
	Over 68 to 74	1⅝
	Over 74	1 11/16
Over 35,000 to 40,000 pounds	44 and under	1⅜
	Over 44 to 50	1 7/16
	Over 50 to 56	1½
	Over 56 to 62	1 9/16
	Over 62 to 68	1⅝
	Over 68 to 74	1 11/16
	Over 74	1¾
Over 40,000 to 45,000 pounds	44 and under	1 7/16
	Over 44 to 50	1½
	Over 50 to 56	1 9/16
	Over 56 to 62	1⅝
	Over 62 to 68	1 11/16
	Over 68 to 74	1¾
	Over 74	1 13/16
Over 45,000 to 50,000 pounds	44 and under	1½
	Over 44 to 50	1 9/16
	Over 50 to 56	1⅝
	Over 56 to 62	1 11/16
	Over 62 to 68	1¾
	Over 68 to 74	1 13/16
	Over 74	1⅞
Over 50,000 to 55,000 pounds	44 and under	1 9/16
	Over 44 to 50	1⅝
	Over 50 to 56	1 11/16
	Over 56 to 62	1¾
	Over 62 to 68	1 13/16
	Over 68 to 74	1⅞
	Over 74	1 15/16
Over 55,000 pounds	44 and under	1⅝
	Over 44 to 50	1 11/16
	Over 50 to 56	1¾
	Over 56 to 62	1 13/16
	Over 62 to 68	1⅞
	Over 68 to 74	1 15/16
	Over 74	2

(e) *Tire width*. Flanged tires shall be no less than 5½ inches wide for standard gage and no less than 5 inches wide for narrow gage. Plain tires shall be no

less than 6 inches wide for standard gage and no less than 5½ inches wide for narrow gage.

§ 230.113 Wheels and tire defects.

Steam locomotive and tender wheels or tires developing any of the defects listed in this section shall be removed from service immediately and repaired. Except as provided in § 230.114, welding on wheels and tires is prohibited. A wheel that has been welded is a welded wheel for the life of the wheel.

(a) *Cracks or breaks*. Wheels and tires may not have a crack or break in the flange, tread, rim, plate, hub or brackets.

(b) *Flat spots*. Wheels and tires may not have a single flat spot that is 2½ inches or more in length, or two adjoining spots that are each two or more inches in length.

(c) *Chipped flange*. Wheels and tires may not have a gouge or chip in the flange that is more than 1½ inches in length and ½ inch in width.

(d) *Broken rims*. Wheels and tires may not have a circumferentially broken rim if the tread, measured from the flange at a point ⅝ inch above the tread, is less than 3¾ inches in width.

(e) *Shelled-out spots*. Wheels and tires may not have a shelled-out spot 2½ inches or more in length, or two adjoining spots that are each two or more inches in length, or so numerous as to endanger the safety of the wheel.

(f) *Seams*. Wheels and tires may not have a seam running lengthwise that is within 3¾ inches of the flange.

(g) *Worn flanges*. Wheels and tires may not have a flange worn to a 15/16 inch thickness or less, as measured at a point ⅜ inch above the tread.

(h) *Worn treads*. Wheels and tires may not have a tread worn hollow 5/16 inch or more.

(i) *Flange height*. Wheels and tires may not have a flange height of less than 1 inch nor more than 1½ inches, as measured from the tread to the top of the flange.

(j) *Rim thickness*. Wheels may not have rims less than 1 inch thick.

(k) *Wheel diameter*. Wheels may not have wheel diameter variance, for wheels on the same axle or in the same driving wheel base, greater than 3/32 inch, when all tires are turned or new tires applied to driving and trailing wheels. When a single tire is applied, the diameter must not vary more than 3/32 inch from that of the opposite wheel on the same axle. When a single pair of tires is applied the diameter must be within 3/32 inch of the average diameter of the wheels in the driving wheel base to which they are applied.

§ 230.114 Wheel centers.

(a) *Filling blocks and shims*. Driving and trailing wheel centers with divided rims shall be properly fitted with iron or steel filling blocks before the tires are applied, and such filling blocks shall be properly maintained. When shims are inserted between the tire and the wheel center, not more than two thicknesses of shims may be used, one of which must extend entirely around the wheel. The shim which extends entirely around the wheel may be in three or four pieces, providing they do not lap.

(b) *Wheel center condemning defects*. Wheel centers with any of the following defects shall be removed from service immediately and repaired:

(1) Wheels centers loose on axle;

(2) Broken or defective tire fastenings;

(3) Broken or cracked hubs, plates, bolts or spokes, except as provided in paragraph (b)(4) of this section; or

(4) Driving or trailing wheel center with three adjacent spokes or 25 percent or more of the spokes in the wheel broken.

(c) *Wheel center repairs*. Wheel centers may be repaired by welding or brazing provided that the defect can properly be so repaired and, following the repair, the crankpin and axle shall remain tight in the wheel. Banding of the hub is permitted.

(d) *Counterbalance maintenance*. Wheel counterbalances shall be maintained in a safe and suitable condition for service.

STEAM LOCOMOTIVE TANKS

§ 230.115 Feed water tanks.

(a) *General provisions*. Tanks shall be maintained free from leaks, and in safe and suitable condition for service. Suitable screens must be provided for tank wells or tank hose and shall be

maintained in a manner that allows the unobstructed flow of water. Feed water tanks shall be equipped with a device that permits the measurement of the quantity of water in the tender feed water tank from the cab or tender deck of the steam locomotive. Such device shall be properly maintained.

(b) *Inspection frequency*. As often as conditions warrant but not less frequently than every 92 service days, the interior of the tank shall be inspected, and cleaned if necessary.

(c) *Top of tender*. Top of tender behind fuel space shall be kept clean, and means provided to carry off excess water. Suitable covers shall be provided for filling holes.

§ 230.116 Oil tanks.

The oil tanks on oil burning steam locomotives shall be maintained free from leaks. The oil supply pipe shall be equipped with a safety cut-off device that:

(a) Is located adjacent to the fuel supply tank or in another safe location;

(b) Closes automatically when tripped and that can be reset without hazard; and

(c) Can be hand operated from clearly marked locations, one inside the cab and one accessible from the ground on each exterior side of the steam locomotive.

APPENDIX A TO PART 230—INSPECTION REQUIREMENTS

The lists in this appendix are intended as guidance only. Adherence to this list does not relieve the steam locomotive owner and/or operator of responsibility for either: (1) Completing the inspection and maintenance requirements described in this part; or (2) ensuring that the steam locomotive, tender and its parts and appurtenances are safe and suitable for service.

Daily Inspection Requirements; § 230.13

1. Observance of lifting pressure of the lowest safety valve.
2. Testing of water glasses and gauge cocks.*
3. Inspection of tubular water glass shields.
4. Inspection of all cab lamps.*
5. Inspection of boiler feedwater delivery systems.*
6. Inspection of lagging for indication of leaks.
7. Inspection for leaks obstructing vision of engine crew.
8. Observance of compressor(s) and governor to ascertain proper operation.*
9. Inspection of brake and signal equipment.*
10. Inspection of brake cylinders for piston travel.
11. Inspection of foundation brake gear.
12. Inspection of sanders.*
13. Inspection of draw gear and chafing irons.
14. Inspection of draft gear.
15. Inspection of crossheads and guides.
16. Inspection of piston rods and fasteners.
17. Inspection of main, side, and valve motion rods.
18. Inspection of headlights and classification lamps.*
19. Inspection of running gear.
20. Inspection of tender frames and tanks.
21. Inspection of tender trucks for amount of side bearing clearance.

NOTE: All items marked (*) should be checked at the beginning of each day the locomotive is used.

31 Service Day Inspection Requirements; § 230.14

1. Washing of boiler.
2. Cleaning and inspection of water glass valves and gauge cocks.
3. Cleaning, washing and inspection of arch tubes, water bar tubes, circulators and siphons.
4. Removal and inspection of all washout and water tube plugs.
5. Testing of all staybolts.
6. Removal, cleaning and inspection of fusible plugs (if any).

92 Service Day Inspection Requirements; § 230.15

1. Removal and testing of all air and steam gauges.
2. Cleaning of steam gauge siphon pipe.
3. Renewal of tubular water glasses.
4. Testing and adjusting of safety relief valves.
5. Testing of main reservoir and brake cylinder leakage.
6. Entering and inspection of tender tank interior.

Annual Inspection Requirements; § 230.16

1. Testing of thickness of arch and water bar tubes (arch brick to be removed)
2. Hydrostatic testing of boiler.
3. Testing of all staybolts.
4. Interior inspection of boiler.
5. Thickness verification of dry pipes.
6. Smoke box inspection.
7. Main reservoir hammer or UT testing and hydrostatic testing (for non-welded and drilled main reservoirs)
8. Removal and inspection of steam locomotive drawbar(s) and pins (NDE testing other than merely visual)

9. Inspection of longitudinal lap joint boiler seams.

5 Year Inspection Requirements; § 230.16

1. Inspection of flexible staybolt caps and sleeves.

1472 Service Day Inspection Requirements; § 230.17

1. Removal of boiler flues (as necessary) and cleaning of boiler interior.
2. Removal of jacket and lagging and inspection of boiler interior and exterior.
3. Hydrostatic testing of boiler.
4. Thickness verification (boiler survey) and recomputation and update of steam locomotive specification card, (FRA Form No. 4).

Appendix B to Part 230—Diagrams and Drawings

Reference 230.8
Drawing 1

BOILER: STAYED AND UNSTAYED SURFACES

Section Through Locomotive Boiler

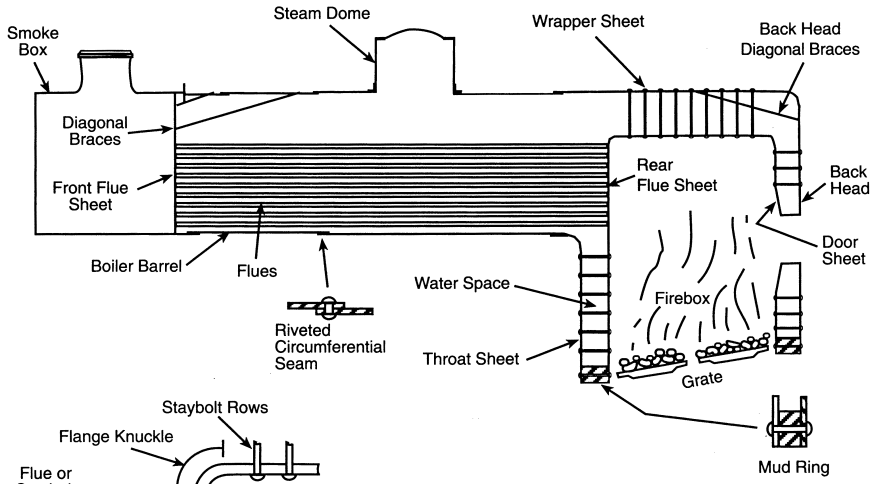

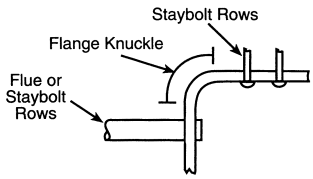

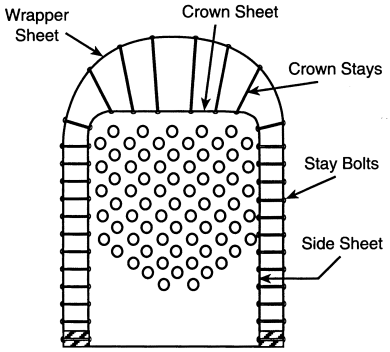

SECTION THROUGH FIREBOX

BOILER STAYED SURFACES

- Front Flue Sheet
- Rear Flue Sheet
- Wrapper Sheet
- Door Sheet
- Side Sheets
- Crown Sheet
- Throat Sheet
- Back Head
- Stayed Section of Thermic Syphons

BOILER UNSTAYED SURFACES

- Boiler Barrel
- Steam Dome
- Arch Tubes
- Thermic Syphon Neck
- Firebox Circulators
- Knuckle Section of Flanged Sheet

Reference 230.27
Drawing 2

RIVET IN SINGLE SHEAR

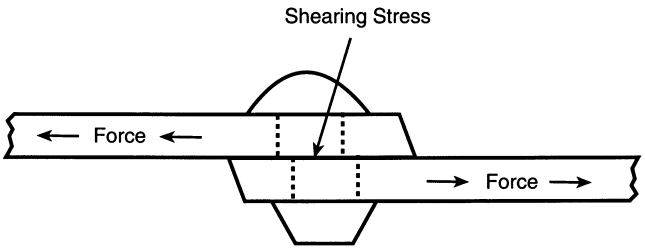

Reference 230.27
Drawing 3

RIVET IN DOUBLE SHEAR

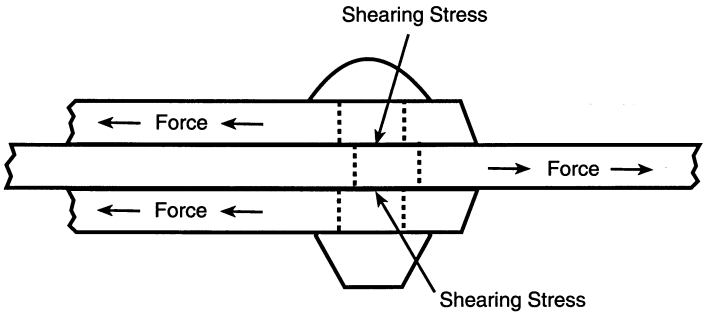

Reference 230.34(b)
Drawing 4

RIVETED BUTT SEAM

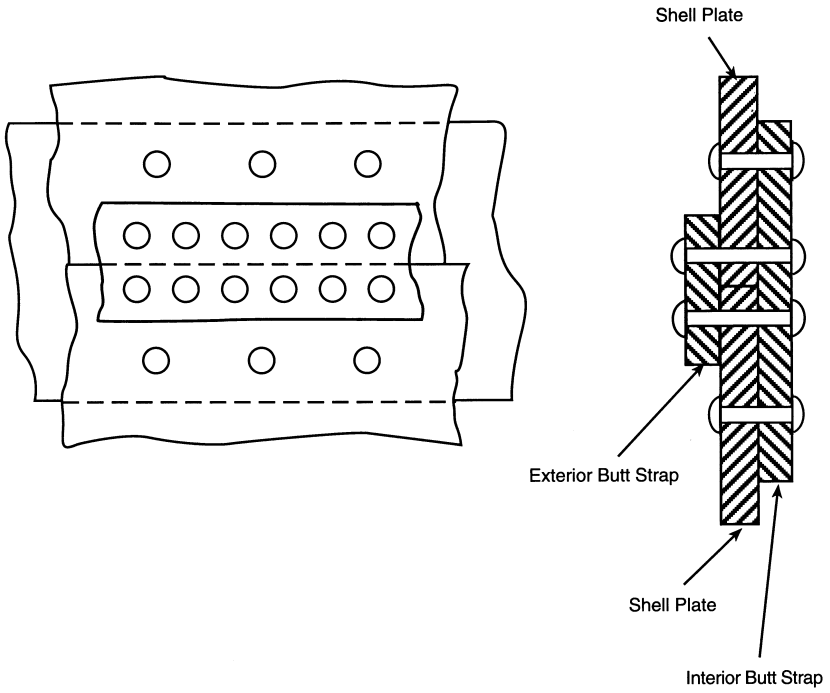

Reference 230.34(a)
Drawing 5

RIVETED BOILER PATCH

Diagonal Riveted Patch

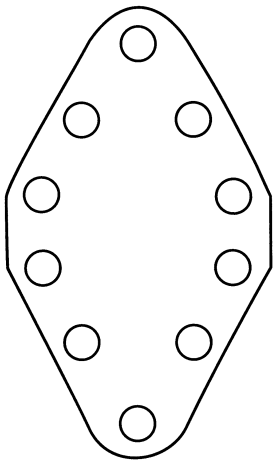

Circular Riveted Patch

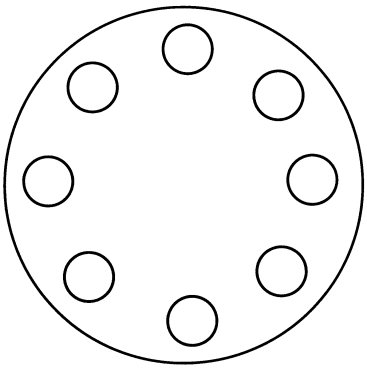

Typical Riveted Patch Installation

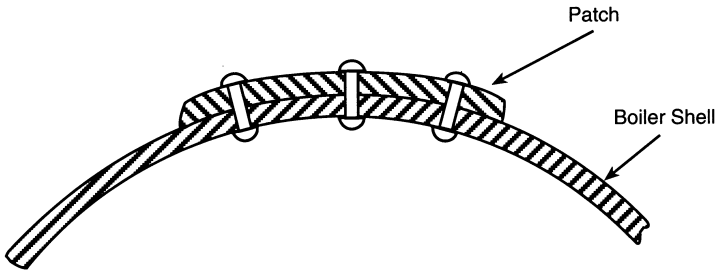

Patch may be installed on Boiler Shell Interior or Exterior

Reference 230.30
Drawing 6

RIVETED LAP SEAM

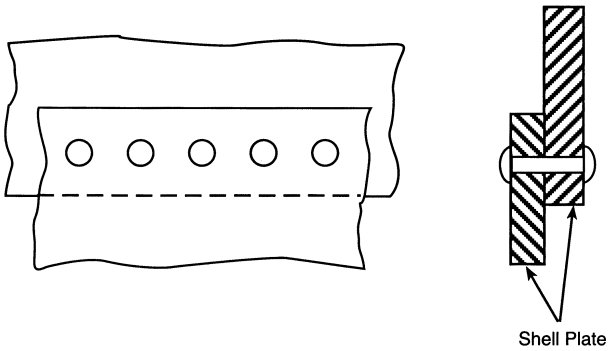

Reference 230.30
Drawing 7

RIVETED LAP SEAM WITH REINFORCING PLATE

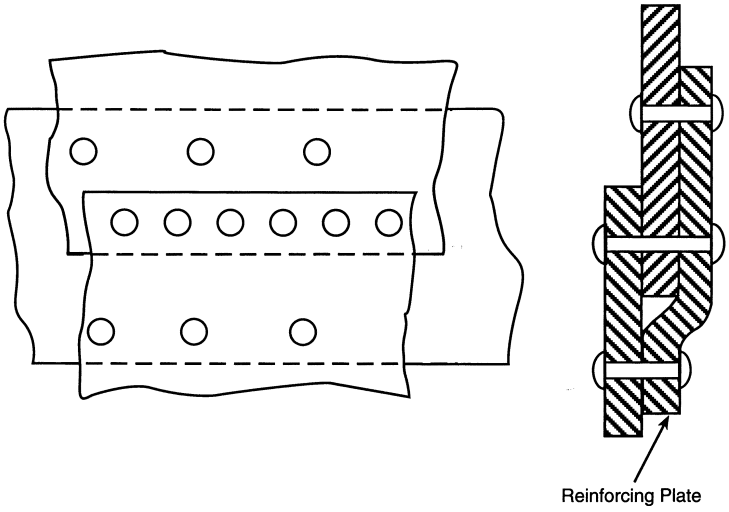

Reference 230.33(c)
Drawing 8

WELD BUILDUP REPAIR OF WASTED UNSTAYED BOILER SHEET

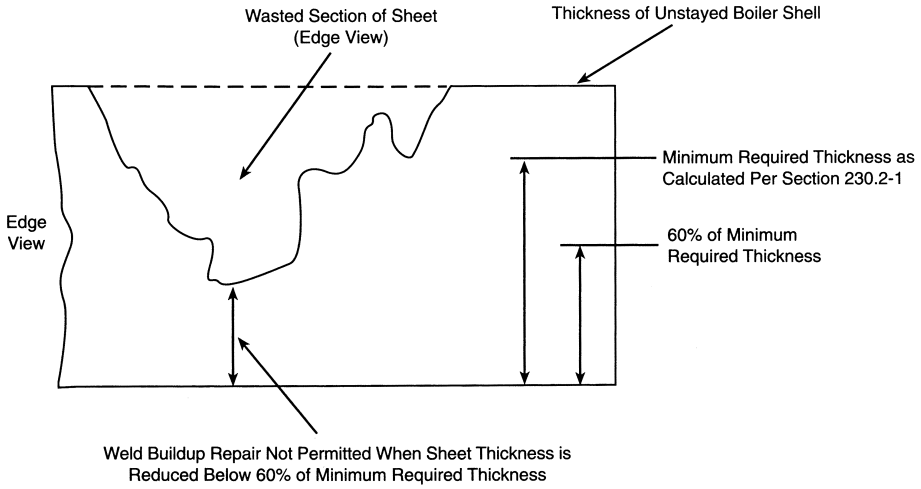

Reference 230.33(d)
Drawing 9

FLUSH PATCHES ON UNSTAYED SECTION OF BOILER SHELL

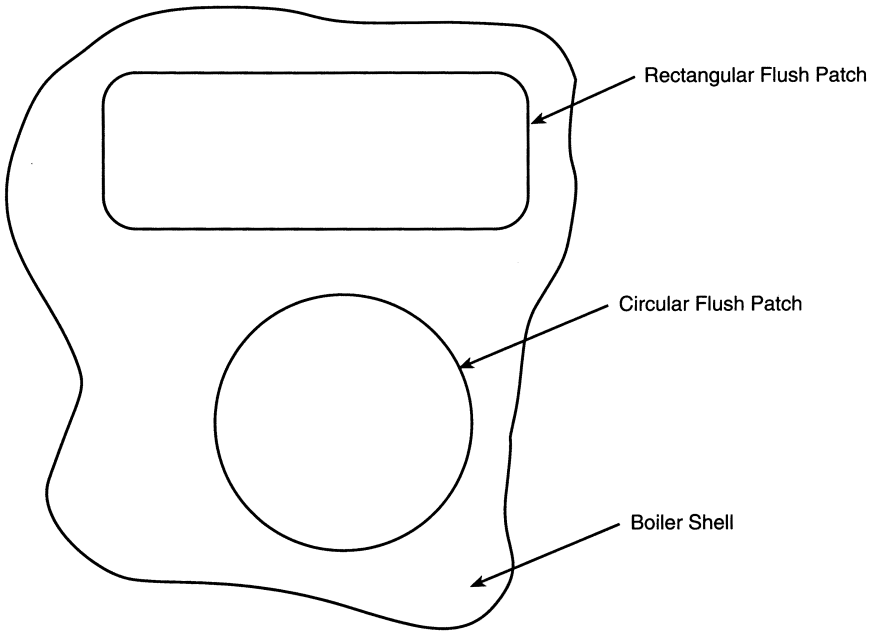

Typical Flush Patch Installation

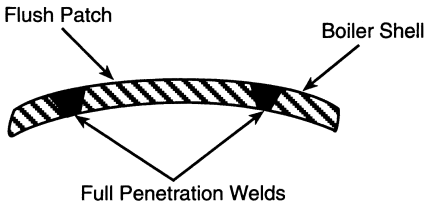

Reference 230.38(b)
Drawing 10

ARRANGEMENT OF TELLTALE HOLE IN REDUCED-BODY STAYBOLT

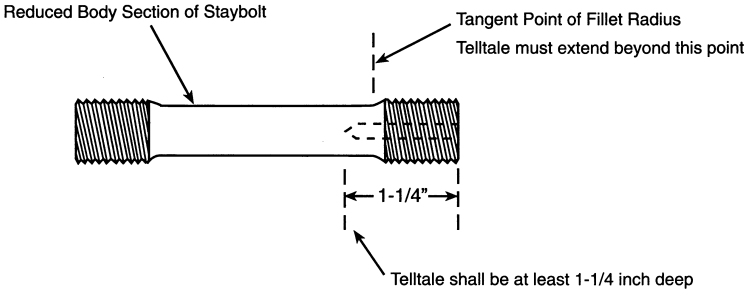

Reference 230.41(b)
Drawing 11

ARRANGEMENT OF TELLTALE HOLE IN HOLLOW FLEXIBLE STAYBOLT

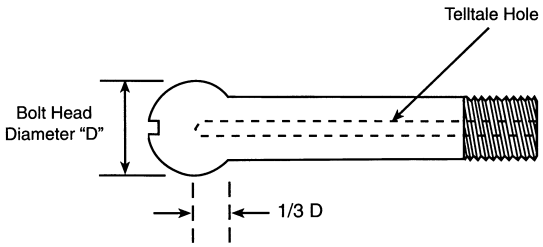

Minimum Telltale Hole Depth into Bolt Head
To Equal 1/3 of Bolt Head Diameter (1/3 D)

Reference 230.51
Drawing 12

GENERAL ARRANGEMENT OF WATER GLASS AND WATER COLUMN VALVES (Typical)

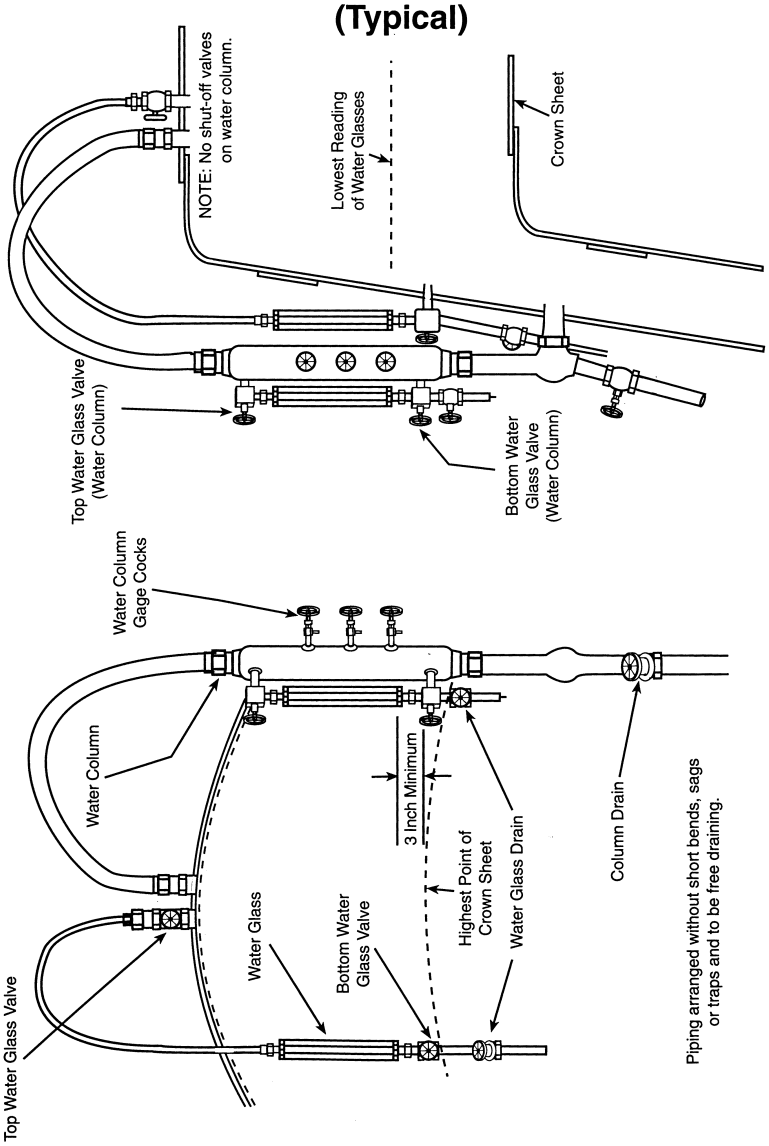

Reference 230.58(b)
Drawing 13

INSTALLATION OF FLUE PLUG

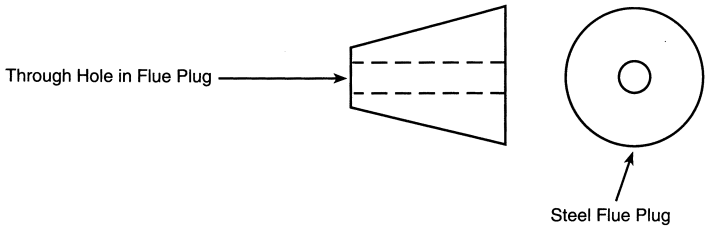

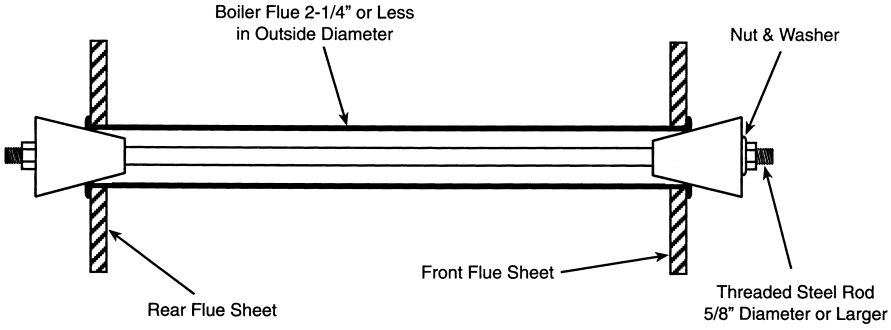

Reference 230.62
Drawing 14

DRY PIPE

Arrangement of Dry Pipe Subject to Pressure

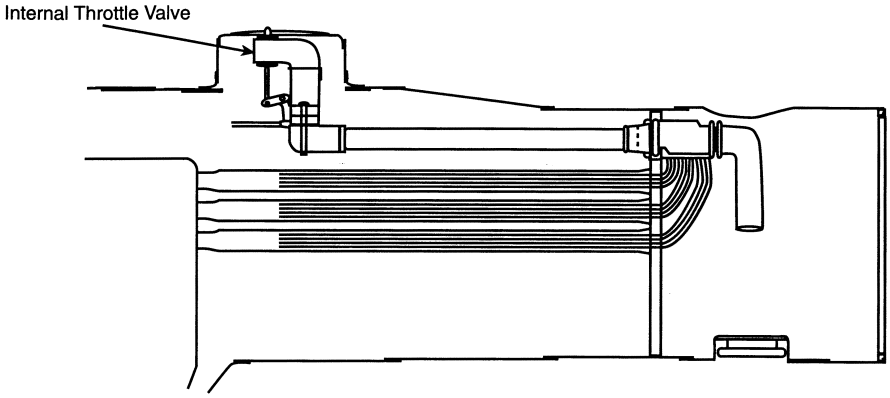

Reference 230.62
Drawing 15

Arrangement of Dry Pipe Not Subject to Pressure

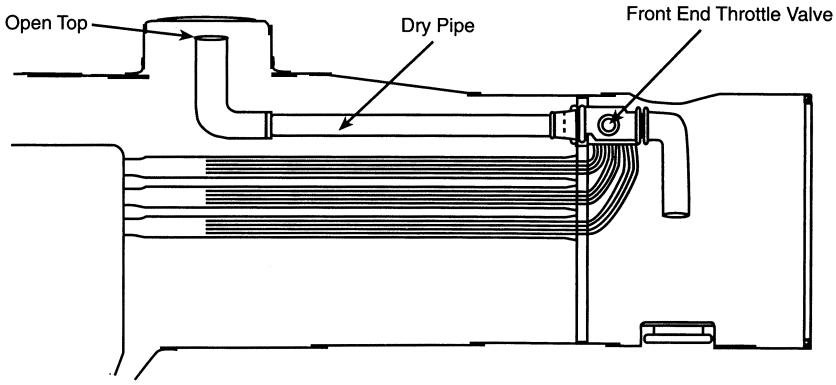

Reference 230.71(b)
Drawing 16

ORIFICE

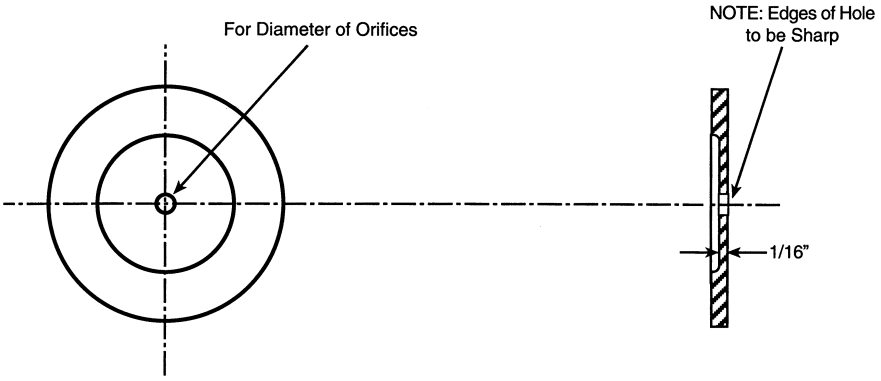

Reference 230.113
Drawing 17

WHEEL DEFECT GAUGE

This gauge to be used in determining flat spots, worn flanges, and broken rims.

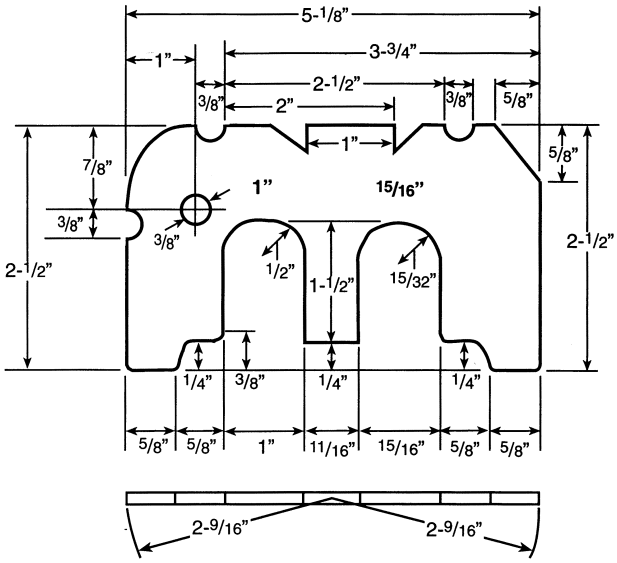

Reference 230.113
Drawing 18

WHEEL DEFECT GAUGE

Method of gauging worn Flanges.

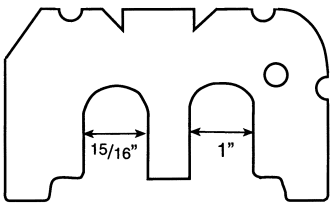

Reference 230.113
Drawing 19

WHEEL DEFECT GAUGE

Method of gauging worn flanges.

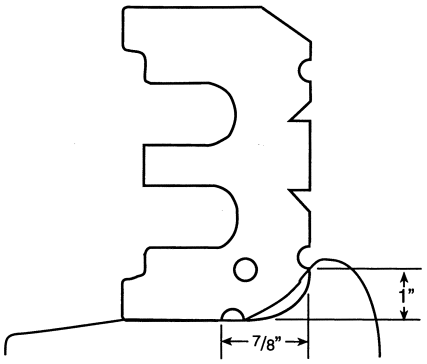

Reference 230.113
Drawing 20

Method of gauging shelled and flat spots.

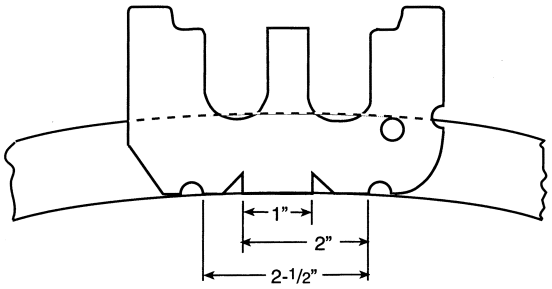

Reference 230.113
Drawing 21

Method of gauging broken rims.

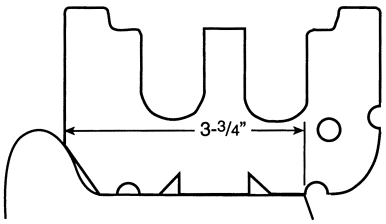

Reference 230.112
Drawing 22

STEEL TIRE

Retaining ring type fastening. Driving and trailing wheels.

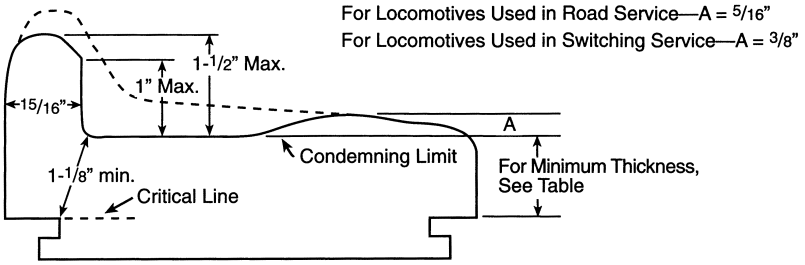

Reference 230.112
Drawing 23

Shrinkage fastening with shoulder and retaining segments. Driving and trailing wheels.

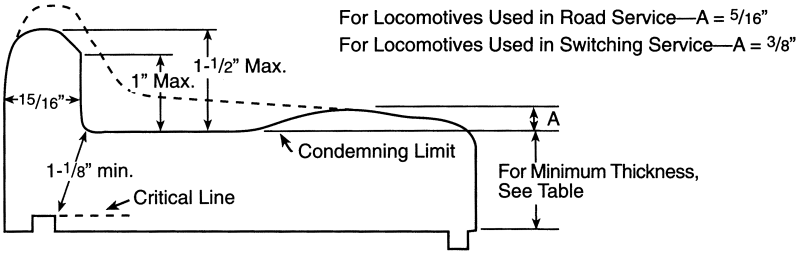

Reference 230.112
Drawing 24

Shrinkage fastening. Driving and trailing wheels.

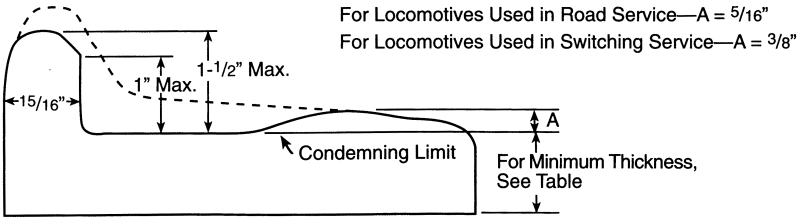

Reference 230.112
Drawing 25

STEEL TIRE

Retaining ring type fastening. Minimum thickness for steel tires. Engine and tender.

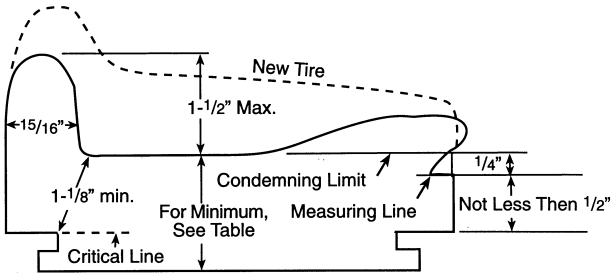

Reference 230.112
Drawing 26

Shrinkage fastening only. Minimum thickness for steel tires. Engine and tender.

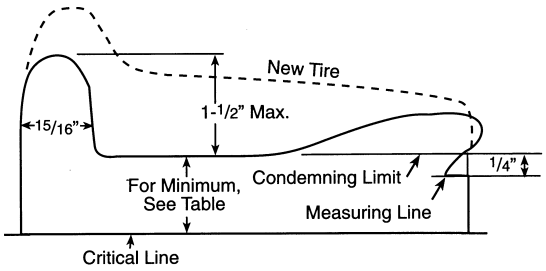

Reference 230.112
Drawing 27

Retaining ring fastening. Minimum thickness for steel tires. Engine and tender.

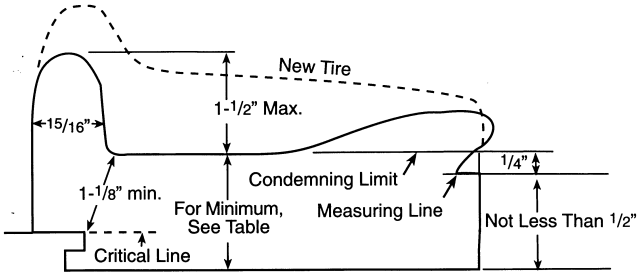

Reference 230.113(j)
Drawing 28

STEEL WHEELS

Minimum thickness of rim. Engine and tender truck wheels.

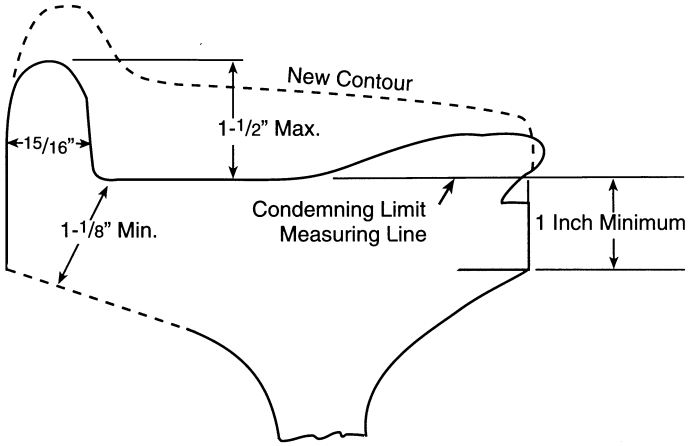

Reference 230.98
Drawing 29

SEAMS IN AXLES

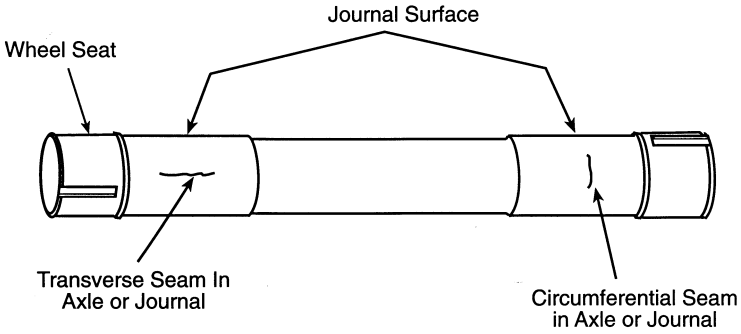

Reference 230.114(a)
Drawing 30

FILLING BLOCK FOR DIVIDED-RIM WHEEL CENTER

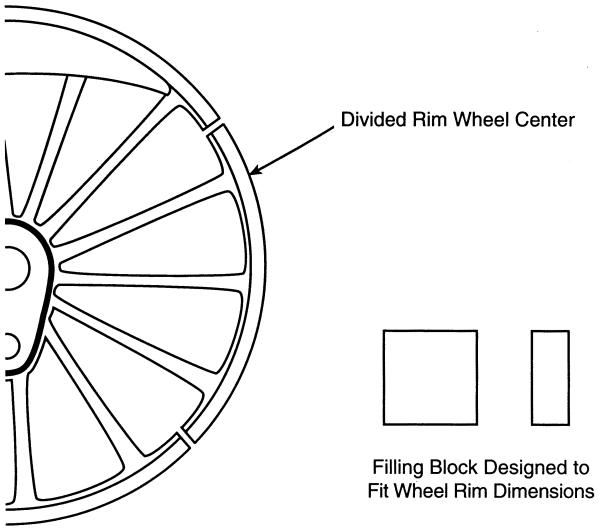

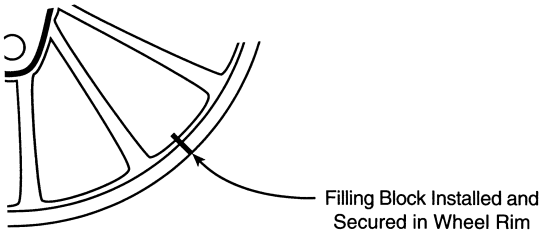

Reference 230.114(c)
Drawing 31

BANDED WHEEL HUB

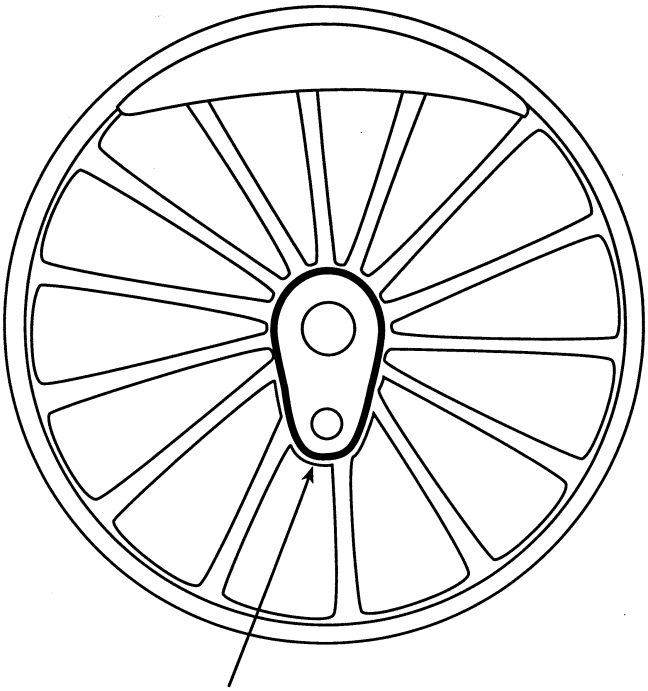

APPENDIX C TO PART 230—FRA INSPECTION FORMS

Appendix C - FRA Inspection Forms

Form No. 1 **31 and 92 Service Day Inspection Report**

Date of Inspection_____ Owner_____ Locomotive Initials_____

Operator_____ Locomotive No._____

31 and 92 Service Day Requirements

Instructions: Non-complying conditions shall be repaired and this report approved before the locomotive is returned to service. Where condition is called for, enter either: **(1) Good -** No defects which could be discovered by a reasonable inspection; **(2) Fair -** Functioning less than optimally but safe and suitable and not in violation of the regulations; or **(3) Poor -** Not in compliance with the regulations. In any case N/A means - not applicable.

Was boiler washed?_____

Were water gauge and valve passages cleaned?_____

Were gauge cock passages cleaned?_____

Were all washout plugs removed and inspected?_____

Were arch tubes, circulators, siphons and water bar tubes cleaned and inspected?_____

Were fusible plugs removed, cleaned & inspected?_____

Were staybolts hammer tested?_____

Were all broken staybolts replaced?_____

Were steam leaks repaired?_____

Condition of draft system and draw gear._____

Condition of running gear._____

Condition of driving gear._____

Condition of spring/equalizing system._____

Condition of tender running gear._____

Condition of brake equipment._____

Were injectors tested and in good condition?_____

Was feedwater pump tested and in good condition?_____

92 Service Day Requirements

Date of previous 92 Service Day Inspection_____

Safety relief valves pop at_____psi_____psi_____psi

Were all steam gauges tested?_____

Were all air brake gauges tested?_____

Were steam gauge siphon pipe(s) cleaned?_____

Were tubular water glasses renewed?_____

Were air compressor(s) orifice tested?_____

Was main reservoir tested for leakage?_____

Were brake cylinders tested for leakage?_____

Was tender tank entered and inspected?_____

If no 92 Service Day Inspection is done, enter number of service days used since last 92 Service Day Insp._____

_____ INSPECTOR

_____ INSPECTOR

The above work has been performed and the report is approved._____ OFFICER IN CHARGE

Form No. 2

Daily Locomotive Inspection Report

Date of Inspection_____ Owner_____ Locomotive Initials_____
Operator_____ Locomotive No._____

Instructions: Non-complying conditions shall be repaired and this report approved before locomotive is returned to service. This report shall be filed even if no non-complying conditions are reported, however it does not have to be approved before the locomotive is returned to service if no non-complying conditions are reported. Locomotive, including its tender and appurtenances, shall be inspected each day it is offered for use.

Repairs needed:	**Repairs done by:**

CONDITION OF WATER GLASSES:_____ _____

CONDITION OF GAUGE COCKS:_____
LP_____**psi**

CONDITION OF INJECTORS / PUMPS:_____

BOILER SAFETY VALVE LIFTS AT:_____**psi**

SEATS AT:_____**psi**

CONDITION OF PISTON ROD AND VALVE STEM PACKING_____

CONDITION OF AIR COMPRESSOR:_____

MAIN RESERVOIR PRESS.: HP_____**psi,**

BRAKE PIPE PRESSURE:_____ _____**psi**

LOCOMOTIVE BRAKE PIPE LEAKAGE:_____**lbs. per minute**

CONDITION OF BRAKES:_____

CONDITION OF SANDERS:_____

Where condition is called for enter:

Good - No defects which could be discovered by a reasonable inspection.
Fair - Functioning less than optimally but is in safe and suitable condition, and not in violation of the rules.
Poor - Not in compliance.
N/A - Not applicable.

Inspector's signature:_____ **Occupation:**_____

The above work has been performed, except as noted, and the report is **approved by:**_____

_____ **Occupation**
_____ **Date**

Approved

Note: Additional items may be added to this form if desired.

Form No. 3 **Annual Inspection Report**

Date of Inspection_____ Owner_____ Locomotive Initials_____

Operator_____ Locomotive No._____

Instructions: Non-complying conditions shall be repaired and this report approved before the locomotive is returned to service. Where condition is called for, enter either: **(1) Good** - No defects which could be discovered by a reasonable inspection; **(2) Fair** - Functioning less than optimally but safe and suitable and not in violation of the regulations; or **(3) Poor** - Not in compliance with the regulations. In any case N/A means - not applicable.

Boiler hydrostatically tested to _____psi, at a water temperature of _____degrees F.

Was boiler washed?_____

Were water gauge and valve passages cleaned?_____

Were gauge cock passages cleaned?_____

Were all washout plugs removed and inspected?_____

Were arch tubes, circulators, siphons and water bar tubes cleaned and inspected?_____

Thickness of arch tubes_____; Water bar tubes_____

Dry pipe thickness_____;Circulator thickness_____

Were water column passages cleaned and inspected?_____

Was boiler entered and inspected?_____

Were drilled flexible staybolt telltale holes tested?_____

Were staybolts hammer tested?_____

Were all broken staybolts replaced?_____

Were longitudinal lap seams inspected?_____

Was smoke box entered and inspected?_____

Safety relief valves pop at_____psi_____psi_____psi

Were injectors tested and in good condition?_____

Was feedwater pump tested and in good condition?_____

Were all steam gauges tested?_____

Were steam gauge siphon pipe(s) cleaned?_____

Were steam leaks repaired?_____

Were tubular water glasses renewed?_____

Were fusible plugs removed, cleaned & inspected?_____

Flexi caps removed on (date)_____

Were all air brake gauges tested?_____

Main reservoir hydro_____psi, hammer_____ NDE_____, Drilled_____

Were brake cylinders tested for leakage._____

Was main reservoir tested for leakage._____

Were air compressor(s) orifice tested?_____

Condition of driving gear._____

Condition of running gear._____

Condition of draft system and draw gear._____

Condition of spring/equalizing system._____

Condition of brake equipment._____

Condition of tender running gear._____

Was tender tank entered and inspected?_____

_____
INSPECTOR

_____
INSPECTOR

The above work has been performed and the report is approved._____
OFFICER IN CHARGE

Locomotive Air Brake Cleaning, Testing and Inspection Record

EQUIPMENT	SERVICE PERIOD	Previous Inspection	Current Annual Date	Inspection Date	Inspection Date	Inspection Date	Inspection Date	Notes
AIR COMPRESSOR ORIFICE TEST	92 service day							
AIR GAUGES	92 service day							
MAIN RESERVOIR LEAKAGE	92 service day							
BRAKE CYLINDER LEAKAGE	92 service day							
FILTERS	Annual Inspection							
DIRT COLLECTORS	Annual Inspection							
MAIN RESERVOIR HYDRO, HAMMER, NDE	Annual Inspection							
BRAKE VALVES	368 service days or second							

FRA Form 4

BOILER SPECIFICATION CARD

Locomotive No._____; **Boiler No.**_____; **Date built**_____
Boiler built by:_____
Owned by:_____
Operated by:_____
Type of boiler:_____; **Dome, where located:**_____

BOILER SURVEY DATA

Where **condition** is called for, use: **New** - New material at the time of the boiler survey; **Good** - Little or no wear and/or corrosion; **Fair** - Obvious wear and/or corrosion.

Boiler Shell Sheets

Material:	Type of Material (wrought iron, carbon steel, or alloy steel)	Carbon Content	Condition
1st course (front)	_____	_____	_____
2nd course	_____	_____	_____
3rd course	_____	_____	_____
Rivets	_____	n/a	n/a

Documentation of how material was determined shall be attached to this form.

Measurements:		At Seam	Thinnest		
Front flue sheet,	thickness	n/a	_____		
1st course,	thickness	_____,	_____,	ID_____	,ID_____
2nd course,	thickness	_____,	_____,	ID_____	,ID_____
3rd course,	thickness	_____,	_____,	ID_____	,ID_____

When courses are not cylindrical give ID at each end

Is boiler shell circular at all points?_____

If shell is flattened, state location and amount_____

Are all flattened areas of shell stayed adequately for the pressure allowed by this form?_____

Water Space at Mud Ring: Sides_____, Front_____, Back_____
Width of water space at sides of fire box measured at center line of boiler: Front_____, Back_____

Firebox and Wrapper Sheets

Firebox sheets:	Thickness	Material	Condition
Rear flue sheet	_____	_____	_____
Crown	_____	_____	_____
Sides	_____	_____	_____
Door	_____	_____	_____
Combustion chamber	_____	_____	_____
Inside throat	_____	_____	_____
Wrapper sheets:			
Throat	_____	_____	_____
Back head	_____	_____	_____
Roof	_____	_____	_____
Sides	_____	_____	_____

Steam Dome

Dome is made of _____pieces (not including seam welts, if any), Top opening diameter_____
Middle cylindrical portion - ID_____ , Opening in boiler shell, longitudinally - _____

Dome sheets:	Thickness	Material	Condition
Base	_____	_____	_____
Middle cylindrical portion	_____	_____	_____
Top	_____	_____	_____
Lid	_____	_____	_____
Boiler shell liner for steam dome opening:	_____	_____	_____

Is liner part of longitudinal seam?_____

Arch Tubes, Flues, Circulators, Thermic Siphons, Water Bar Tubes, Superheaters, and Dry Pipe

Arch tubes: OD_____, wall thickness_____; number _____; condition_____

Flues:
OD_____, wall thickness_____, length_____; number_____; condition_____
OD_____, wall thickness_____, length_____; number_____; condition_____
OD_____, wall thickness_____, length_____; number_____; condition_____

Circulators: OD_____, wall thickness_____; number _____; condition_____

Thermic siphons: number_____; plate thickness_____; condition_____
neck OD_____, neck thickness_____; condition_____

Water bar tubes: OD_____, wall thickness_____

Superheater units directly connected to boiler with no intervening valve:
Type_____, Tube OD_____, wall thickness_____; number_____; condition_____

Dry pipe subject to pressure:
OD_____, wall thickness_____, material_____; condition_____

Stay Bolts, Crown Bar Rivets, and Braces

Stay bolts:
Smallest crown stay diameter_____, avg. spacing_____X_____; condition_____
Smallest stay bolt diameter_____, avg. spacing_____X_____ ; condition_____
Smallest combustion chamber stay bolt dia._____,
avg. spacing_____X_____; condition_____

Measurement at smallest diameter

Crown bar bolts & rivets:
Roof sheet rivets, smallest dia._____, ave. spacing_____X_____; condition_____
Roof sheet bolts, smallest dia._____, ave. spacing_____X_____; condition_____
Crown sheet rivets, smallest dia._____, ave. spacing_____X_____; condition_____
Crown sheet bolts, smallest dia._____, ave. spacing_____X_____;condition_____

Braces:

	Number	Total Area Stayed	Total Cross Sectional Area of Braces Actual	Equivalent Direct Stay
Backhead	_____	_____	_____	_____
Throat sheet	_____	_____	_____	_____
Front tube sheet	_____	_____	_____	_____
_____	_____	_____	_____	_____
_____	_____	_____	_____	_____

Safety Valves, Heating Surface, and Grate Area

Safety valves: Total number of safety valves on locomotive_____

Valve Size	Manufacturer	No. valves of this size and manufacture
_____	_____	_____
_____	_____	_____
_____	_____	_____
_____	_____	_____

Heating Surface:
Heating surface, as part of a circulating system in contact on one side with water or wet steam being heated and on the other side with gas or refractory being cooled, shall be measured on the side receiving heat.

Firebox and Combustion Chamber	_____	square feet
Flue Sheets (less flue ID areas)	_____	square feet
Flues	_____	square feet
Circulators	_____	square feet
Arch Tubes	_____	square feet
Thermic Siphons	_____	square feet
Water Bar Tubes	_____	square feet
Superheaters (front end throttle only)	_____	square feet
Other	_____	square feet
Total Heating Surface	_____	square feet

Grate area:_____square feet

Water Level Indicators, Fusible Plugs, and Low Water Alarms

Height of lowest reading of gauge glasses above crown sheet:_____ _____

Height of lowest reading of gauge cocks above crown sheet:_____

Is boiler equipped with fusible plug(s)? _____, number_____

Is boiler equipped with low water alarm(s)? _____, number_____

Calculations

Staybolt stresses:

Stay bolt under greatest load, maximum stress _____psi

Location_____

Crown stay, crown bar rivet, or crown bar bolt under greatest load, max. stress _____psi

Location_____

Combustion chamber stay bolt under greatest load, maximum stress _____psi

Location_____

Braces:

Round or rectangular brace under greatest load, maximum stress _____psi

Location_____

Gusset brace under greatest load, maximum stress _____psi

Location_____

Shearing stress on rivets:

Greatest shear stress on rivets in longitudinal seam _____psi

Location (course #)_____ ; Seam Efficiency_____

Boiler shell plate tension:

Greatest tension on net section of plate in longitudinal seam _____psi

Location (course #)_____ ; Seam Efficiency_____

Boiler plate and components, minimum thickness required @ tensile strength:

Front tube sheet	_____@_____	Rear flue sheet	_____@_____
1st course at seam	_____@_____	1st course not at seam	_____@_____
2nd course at seam	_____@_____	2nd course not at seam	_____@_____
3rd course at seam	_____@_____	3rd course not at seam	_____@_____
Roof sheet	_____@_____	Crown sheet	_____@_____
Side wrapper sheets	_____@_____	Firebox side sheets	_____@_____
Back head	_____@_____	Door sheet	_____@_____
Throat sheet	_____@_____	Inside throat sheet	_____@_____
Combustion chamber	_____@_____	Dome, top	_____@_____
Dome, middle	_____@_____	Dome, base	_____@_____
Arch tubes	_____@_____	Dome, lid	_____@_____
Water bar tubes	_____@_____	Thermic siphons	_____@_____
Dry pipe	_____@_____	Circulators	_____@_____

Notes. **1. If tensile strength used is greater than 50,000 psi for steel or greater than 45,000 psi for wrought iron, supporting documentation must be furnished.**

2. Any shell dimension less than 1/4" in thickness may not be adequate for support of or by other structures, particularly where threads or staybolts are concerned. Applicable codes should be consulted.

Boiler Steam Generating Capacity: _____pounds per hour

The following may be used as a guide for estimating steaming capacity:

Pounds of Steam Per Hour Per Square Foot of Heating Surface:

Hand fired	8 lbs. per hr.
Stoker fired	10 lbs. per hr.
Oil, gas or pulverized fuel fired	14 lbs. per hr.

Record of Alterations

Description of Alteration	Date of Alteration

Record of Waivers

Waiver No.	Section No. Affected	Scope and Content of Waiver

Calculations done by:_____; Verified by:_____

Data used to verify the foregoing specifications is current and accurate. Based upon the information contained in this document and all necessary calculations, this boiler of Locomotive (Initial & number)_____ is safe for a working pressure of _____psi.

_____ Date_____; _____ Date_____

Locomotive Owner **Locomotive Operator**

Make working sketch here or attach drawing of longitudinal and circumferential seams used in shell of boiler, indicating on which courses used and give calculated efficiency of weakest longitudinal seam.

Form No. 5 **Locomotive Service Day Record**

Locomotive Initial and No._____ **owned by** _____ and **operated by**_____was placed in service following a 1472 Service Day Inspection on (start date)_____.
This locomotive shall not be operated after (date)_____, or it shall not be operated after it has accumulated 1472 service days from the above start date, whichever comes first, at which time it shall be due for a 1472 Service Day Inspection.

	Year															
Serv. days since last insp.																
Annual Date																
Serv. days since last insp.																
31 Service Day Date																
Serv. days since last insp.																
31 Service Day Date																
Serv. days since last insp.																
92 Service Day Date																
Serv. days since last insp.																
31 Service Day Date																
Serv. days since last insp.																
31 Service Day Date																
Serv. days since last insp.																
92 Service Day Date																
Serv. days since last insp.																
31 Service Day Date																
Serv. days since last insp.																
31 Service Day Date																
Serv. days since last insp.																
92 Service Day Date																
Serv. days since last insp.																
31 Service Day Date																
Serv. days since last insp.																
31 Service Day Date																
Serv. days since last insp.																
Annual Date																
TOTAL																

A copy of this record shall be filed with the Regional Administrator after 31 December and prior to 31 January of each year.

Signed_____**Officerin Charge**

FRA Form 19

Report of
ALTERATION ☐
or
Welded or Riveted REPAIR ☐

Locomotive Initials_____ **Locomotive No.**_____; **Boiler No.**_____;

Owned by _____

Operated by _____

Date work completed_____

Description of work:_____

_____
_____
_____
_____
_____
_____
_____

Stress Calculations:

Remarks:_____

_____
_____
_____
_____
_____
_____
_____

Attach drawings used in the repair or alteration or make drawings on back of this form.

Work done by:_____;

Certified by:_____

[64 FR 62865, Nov. 17, 1999, as amended at 70 FR 41996, July 21, 2005]

APPENDIX D TO PART 230—CIVIL PENALTY SCHEDULE

Section	Violation	Willful violation
Subpart A—General		
230.11 Repair of non-complying conditions:		
(a) Failure to repair non-complying steam locomotive prior to use in service	$1,000	$2,500
(b) Failure of owner and/or operator to approve repairs made prior to use of steam locomotive	1,000	1,500
230.12 Movement of non-complying steam locomotive:	(1)	(1)
230.13 Daily inspection:		
(a) (b):		
(1) Inspection overdue	1,500	3,000
(2) Inspection not performed by qualified person	1,000	1,500
(c) Inspection report not made, improperly executed or not retained	1,000	1,500
230.14 Thirty-one service day inspection:		
(a):		
(1) Inspection overdue	1,500	3,000
(2) Inspection not performed by qualified person.		
(b) Failure to notify FRA	1,000	1,500
(c) Inspection report not made, improperly executed, not properly filed	1,000	1,500
230.15 Ninety-two service day inspection:		
(a):		
(1) Inspection overdue	1,500	3,000
(2) Inspection not performed by qualified person	1,000	1,500
(b) Inspection report not made, improperly executed, not properly filed	1,000	1,500
230.16 Annual inspection:		
(a):		
(1) Inspection overdue	1,500	3,000
(2) Inspection not performed by qualified person	1,000	1,500
(b) Failure to notify FRA	1,000	1,500
(c) Inspection report not made, improperly executed, not properly filed	1,000	1,500
230.17 One thousand four hundred seventy-two service day inspection:		
(a):		
(1) Inspection overdue	1,500	3,000
(2) Inspection not performed by qualified person	1,250	2,000
(b) Inspection report not made, improperly executed, not properly maintained, not properly filed	1,000	1,500
230.18 Service days:		
(a) Service day record not available for inspection	1,000	1,500
(b) Failure to file service day report with FRA Regional Administrator	1,000	1,500
(c) Failure to complete all 1,472 service day inspection items prior to returning retired steam locomotive to service	1,500	3,000
230.19 Posting of forms:		
(a) FRA Form No. 1:		
(1) FRA Form No. 1 not properly filled out	1,000	1,500
(2) FRA Form No. 1 not properly displayed	1,000	1,500
(b) FRA Form No. 3:		
(1) FRA Form No. 3 not properly filled out	1,000	1,500
(2) FRA Form No. 3 not properly displayed	1,000	1,500
230.20 Alteration and repair reports:		
(a) Alterations:		
(1) Failure to properly file FRA Form No. 19 with FRA Regional Administrator	1,000	1,500
(2) FRA Form No. 19 not properly filled out	1,000	1,500
(3) FRA Form No. 19 not properly maintained	1,000	1,500
(b) Repairs to unstayed portions of the boiler:		
(1) FRA Form No. 19 not properly filled out	1,000	1,500
(2) FRA Form No. 19 not properly maintained	1,000	1,500
(c) Repairs to stayed portions of the boiler:		
(1) FRA Form No. 19 not properly filled out	1,000	1,500
(2) FRA Form No. 19 not properly maintained	1,000	1,500
230.21 Failure to properly document steam locomotive number Change	1,000	1,500
Subpart B—Boilers and Appurtenances		
230.22 Failure to properly report accident resulting from failure of steam locomotive boiler or part or appurtenance thereof	1,500	2,500
230.23 Responsibility for general construction and safe working pressure:		
(a) Failure to properly establish safe working pressure for steam locomotive boiler	5,000	10,000
(b) Placing steam locomotive in service before safe working pressure for boiler has been established	5,000	10,000
230.24 Maximum allowable stress values on boiler components:		
(a) Use of materials not of sufficient tensile strength	1,000	2,000
(b) Use of a safety factor value of less than 4 when using the code of original construction in boiler calculations	2,000	4,000
230.25 Maximum allowable stresses on stays and braces:		

Section	Violation	Willful violation
(a) Exceeding allowable stress values on fire box and/or combustion chamber	1,000	2,000
(b) Exceeding allowable stress values on round, rectangular or gusset braces	1,000	2,000
230.29 Inspection and repair:		
(a):		
(1) Failure of owner and/or operator to inspect and repair any steam locomotive boiler and/or appurtenance under control thereof	1,500	3,000
(2) Failure to remove steam locomotive from service when considered necessary to do so	2,500	5,000
(b):		
(1) Failure of perform repairs in accordance with accepted industry standards	2,000	4,000
(2) Owner and/or operator returning steam locomotive boiler and/or appurtenances to service before they are in good condition and safe and suitable for service	2,000	4,000
230.30 Lap-joint seam boilers, Failure to properly inspect	2,000	4,000
230.31 Flues to be removed:		
(a):		
(1) Failure to remove all flues when inspecting boiler	1,500	3,000
(2) Failure to enter boiler and clean and inspect	1,500	3,000
(b) Failure to remove superheater flues when deemed necessary to do so	1,000	2,000
230.32 Time and method of inspection:		
(a) Failure to perform 1,472 service day inspection when required to do so	1,500	3,000
(b) Failure to properly inspect boiler during 1,472 service day inspection	1,500	3,000
230.33 Welded repairs and alterations:		
(a) Failure to obtain permission before welding on unstayed portions of boiler containing alloy or carbon steel with carbon content over .25 percent carbon	1,500	3,000
(b) Failure to perform welding on unstayed portions of boiler containing carbon steel not exceeding .25 percent carbon in accordance with a nationally accepted standard for boiler repairs	1,500	3,000
(c):		
(1) Failure to submit written request for approval before performing weld buildup on wasted areas of unstayed boiler surfaces that exceed 100 square inches or the smaller of 25 percent of minimum required wall thickness or ½ inch	1,500	3,000
(2) Repairing wasted sheets	1,500	3,000
230.34 Riveted repairs and alterations:		
(a) Failure to obtain approval before making riveted alterations on unstayed portions of the boiler; failure to do riveting in accordance with established railroad practices or accepted national standards for boiler repairs	1,500	3,000
(b) Failure to perform riveted repairs on unstayed boiler portions in accordance with established railroad practices or accepted national standards for boiler repairs	1,500	3,000
(c) Failure to perform riveted repairs on stayed boiler portions in accordance with established railroad practices or accepted national standards for boiler repairs	1,000	2,000
230.35 Failure to raise temperature of steam locomotive boiler to 70 degrees F. before applying hydrostatic pressure to the boiler	1,000	2,000
230.36 Hydrostatic testing of boilers:		
(a) Failure to perform hydrostatic test of boiler as required	1,500	3,000
(b) Failure to properly perform hydrostatic test	1,500	3,000
(c) Failure to properly inspect boiler after conducting hydrostatic test above MAWP	1,500	3,000
230.37 Failure to perform proper steam test or inspection of boiler after completion of repair or alteration to boiler	1,000	2,000
230.38 Telltale holes:		
(a) Failure to have telltale holes as required in staybolts	1,000	2,000
(b) Failure to have proper telltale holes in reduced body staybolts	1,000	2,000
(c) Failure to keep telltales holes when so required	1,000	2,000
230.39 Broken staybolts:		
(a) Boiler in service with excess number of broken staybolts	1,500	3,000
(b) Failure to replace staybolts when required to do so; to properly replace staybolts when so required; to inspect adjacent staybolts when replacing broken staybolts	1,500	3,000
(c) Failure to count leaking, plugged, or missing telltale holes as broken staybolts	1,500	3,000
(d) Closing telltale holes by prohibited means	1,500	3,000
230.40 Time and method of staybolt testing:		
(a) Failure to hammer test staybolts when so required	1,000	2,000
(b) Failure to properly hammer test staybolts	1,000	2,000
230.41 Flexible staybolts with caps:		
(a) Failure to inspect flexible staybolts as required	1,000	2,000
(b) Failure to replace broken flexible staybolts; failure to close inner ends of telltale holes as required	1,000	2,000
(c) Failure to report removal of flexible staybolts caps and other tests on FRA Form No. 3 when so required	1,000	2,000
(d) Failure to remove staybolt caps or otherwise test when FRA inspector or steam locomotive owner and/or operator consider it necessary to do so	1,000	2,000
230.42 Failure to have accurate boiler steam gauge where engine crew can conveniently read	2,000	4,000
230.43 Failure to have gauge siphon of proper capacity on steam gauge supply pipe; failure to properly clean, maintain the steam gauge supply pipe	1,000	2,000

Section	Violation	Willful violation
230.44 Failure to test steam gauge when so required	1,000	2,000
230.45 Failure to properly test and/or set steam gauge	1,000	2,000
230.46 Failure to attach to boiler backhead metal badge plate showing allowable steam pressure	1,000	1,500
230.47 Boiler Number:		
(a) (b) (c) Failure to stamp builder's number on boiler when number is known	1,000	1,500
230.48 Number and capacity of safety relief valves:		
(a) Failure to equip steam locomotive boiler with proper safety relief valves	2,500	5,000
(b) Failure to provide additional safety relief valve capacity when so required	3,000	6,000
230.49 Setting of safety relief valves:		
(a) Safety relief valve(s) set and/or adjusted by person not competent to do so	2,500	5,000
(b) Safety relief valve(s) not set to open at prescribed pressure(s)	2,500	5,000
(c) Safety relief valve(s) not properly set	3,000	6,000
(d) Set pressure of lowest safety relief valve not properly indicated	1,000	2,000
230.50 Failure to test and adjust safety relief valves when required to do so	1,500	3,000
230.51 Failure to equip steam locomotive boiler with at least 2 properly installed water glasses	1,000	2,000
230.52 Failure to properly equip water glasses	2,000	4,000
230.53 Failure to properly clean water glass valves and/or gauge cocks when required to do so	1,000	2,000
230.54 Testing and maintenance:		
(a) Failure to properly test water glasses and/or gauge cocks	1,000	2,000
(b) Failure to properly maintain gauge cocks, water column drain valves, and/or water glass valves	1,500	3,000
230.55 Tubular type water and lubricator glasses and shields:		
(a) Failure to renew tubular type water glasses as required	1,000	2,000
(b) Failure to properly shield tubular water glasses and/or lubricator glasses	1,000	2,000
(c) Failure to properly locate and/or maintain water glasses and/or water glass shields	1,000	2,000
230.56 Failure to equip water glass with suitable lamp	1,000	2,000
230.57 Injectors and feedwater pumps:		
(a) Failure to equip steam locomotive with proper means for delivering water to the boiler	3,000	6,000
(b) Failure to properly test and/or maintain injectors, feedwater pumps, boiler checks, delivery pipes, feed water pipes, tank hose, tank valves	2,500	5,000
(c) Failure to properly brace injectors, feedwater pumps, and/or associated piping	1,000	2,000
230.58 Flue plugs:		
(a) Plugging flue plugs when not otherwise permitted	1,000	2,000
(b) Improperly plugging flue plugs, when otherwise permitted	1,000	2,000
230.59 Failure to remove and properly clean fusible boiler plugs when required to do so; failure to properly note removal	1,500	3,000
230.60 Time of washing:		
(a) Failure to thoroughly wash boiler when required to do so	1,000	2,000
(b) Failure to remove washout plugs, arch tube plugs, thermic siphon plugs, circulator plugs, water bar plugs when washing locomotive boiler	1,500	3,000
(c) Failure to examine and/or properly maintain washout plugs washout plug sleeves, threaded openings	1,500	3,000
(d) Failure to clean fusible plugs when required to do so	1,500	3,000
230.61 Arch tubes, water bar tubes, circulators and thermic siphons:		
(a) Failure to clean, wash, inspect arch tubes, water bar tubes, circulators and thermic siphons as required	1,000	2,000
(b) Failure to renew arch tubes, water bar tubes; failure to repair or renew circulators, thermic siphons when required	1,500	3,000
(c) Failure to properly inspect and/or replace as necessary arch tubes, water bar tubes, circulators	1,500	3,000
230.62 Failure to properly inspect and/or repair or replace as necessary dry pipes subject to pressure	2,500	5,000
230.63 Failure to properly inspect smoke box, steam pipes, pressure parts when required to do so	1,500	3,000
230.64 Failure to remove from service steam locomotive boiler leaking under lagging from condition which may reduce safety and/or repair the boiler before returning to service	1,500	3,000
230.65 Failure to keep steam locomotive boiler, piping, appurtenances in repair so steam does not obscure vision	1,000	2,000
230.66 Failure to properly oversee general design, construction, maintenance of steam locomotive(s) and tender(s)	1,000	2,000
230.67 Failure to ensure all steam locomotives and tenders are properly inspected and repaired and/or all defects are properly repaired and steam locomotive and/or tender are in good condition, safe and suitable for service before being returned to service	2,500	5,000
230.68 Failure to equip steam locomotive that operates in excess of 20 miles per hour over the general system with speed indicator maintained to ensure accurate functioning	1,000	1,500
230.69 Failure to equip steam locomotive with properly supported ash pan with operating mechanism that may be safely operated and securely closed	1,000	2,000
230.70 Safe condition:		
(a) Failure to perform proper pre-departure inspection when so required	1,000	2,000
(b) Failure to properly equip steam locomotive with brake pipe valve clearly identified as "Emergency Brake Valve"	1,000	2,000
230.71 Orifice testing of air compressors:.		
(a)(b):		
Failure to properly test and/or maintain air compressor(s) capacity	1,000	2,000

Section	Violation	Willful violation
230.72 Testing main reservoirs:		
(a) Failure to properly test main reservoir(s) when required	1,000	2,000
(b) Impermissibly or improperly drilling main reservoir	1,000	2,000
(c) Impermissibly using NDE method to measure wall thickness of main reservoir	1,000	2,000
(d) Failure to use appropriate method of NDE testing of wall thickness of welded or riveted longitudinal lap seam main reservoir(s); failure to withdraw main reservoir(s) from service when testing reveals insufficient wall thickness	1,500	3,000
230.73 Air gauges:		
(a) Failure to equip steam locomotive with properly located air gauge(s) that are no more than 3 psi in error	1,000	1,500
(b) Failure to test air gauge(s) when so required	1,000	1,500
(c) Failure to properly test air gauge(s)	1,000	1,500
230.74 Failure to properly clean and/or test all air brake valves, related dirt collectors, filters when required to do so	1,000	1,500
230.75 Failure to properly stencil or display date of testing and cleaning and initials of shop or station performing work	1,000	1,500
230.76 Piston travel:		
(a) Insufficient minimum piston travel	1,000	1,500
(b) Excessive piston travel when steam locomotive is stationary	1,000	2,000
230.77 Foundation brake gear:		
(a) Failure to properly maintain foundation brake gear	1,000	2,000
(b) Foundation brake gear less than 2.5 inches above rail	1,000	2,000
230.78 Leakage:		
(a):		
(1) Failure to test for leakage from main reservoir or related piping as required	1,000	1,500
(2) Failure to repair excessive leakage from main reservoir or related piping leakage	1,000	2,000
(b) Failure to test for brake cylinder as required	1,000	1,500
(c):		
(1) Failure to test for leakage from steam locomotive brake pipe as required	1,000	2,000
(2) Failure to repair excessive brake pipe leakage	1,000	2,000
230.79 Train signal system:		
(1) Failure to test the train signal system or other form of on-board communication as required	1,000	1,500
(2) Failure to repair train signal system or other on-board communication when not safe or suitable for service	1,000	1,500
230.80 Cabs:		
(a) Steam locomotive cab not safe and suitable for service	1,000	2,000
(b) Steam pipes: Construction, attachment	1,000	2,000
(c) Oil-burning steam locomotive, cab-enclosed	1,000	1,500
230.81 Cab aprons:		
(a) Cab apron, general provisions	1,000	1,500
(b) Cab apron, insufficient width	1,000	1,500
230.82 Fire doors:		
(a) Safe and suitable for service, general provisions	1,000	2,000
(b) Construction and maintenance of mechanically operated fire doors	1,000	2,000
(c) Construction and maintenance of hand-operated fire doors	1,000	2,000
230.83 Cylinder cocks:		
(1) Failure to properly equip with cylinder cocks	1,000	1,500
(2) Failure to properly maintain cylinder cocks	1,000	1,500
230.84 Sanders:		
(1) Inoperable sanders	1,000	1,500
(2) Failure to test sanders	1,000	1,500
230.85 Audible warning devices:		
(a) General provisions	1,000	1,500
(b) Sound level measurements, Failure to properly take	1,000	1,500
230.86 Required illumination:		
(a) General provisions	1,000	1,500
(b) Dimming device, Failure to properly equip with	1,000	1,500
(c) Multiple locomotives, Failure of lead locomotive to display headlight	1,000	1,500
230.87 Cab lights: Failure to properly equip with	1,000	2,000
230.88 Throttles: Failure to properly maintain, equip	1,000	2,000
230.89 Reverse gear:		
(a) General provisions	1,000	2,000
(b) Air-operated power reverse gear	1,000	2,000
(c) Power reverse gear reservoirs	1,000	2,000
230.90 Draw gear and draft systems:		
(a) Maintenance and testing	1,000	1,500
(b) Safety bars and chains, general	1,000	1,500
(c) Safety bars and chains, minimum length	1,000	1,500
(d) Lost motion between steam locomotive and tender	1,000	1,500
(e) Spring buffers: Improper application, compression	1,000	1,500
230.91 Chafing irons: Improper application, maintenance	1,000	1,500

Section	Violation	Willful violation
230.92 Draw gear, draft systems: Improperly maintained, fastened	1,000	1,500
230.93 Pistons and piston rods:		
(a) Failure to properly inspect, maintain, renew	1,000	2,000
(b) Fasteners: Failure to keep tight, properly equip	1,000	2,000
230.94 Crossheads: Improperly maintained, excess clearance	1,000	2,000
230.95 Guides: Failure to securely fasten, properly maintain	1,000	2,000
230.96 Main, side, valve motion rods:		
(a) General	1,000	2,000
(b) Repairs.		
(1) Failure to make in accordance with accepted national standard	1,000	2,000
(2) Failure to submit written request for approval prior to welding	1,000	2,000
(c) Bearings and bushings	1,000	1,500
(d) Rod side motion: Excessive motion	1,000	1,500
(e) Oil, grease cups: Failure to securely fasten, properly equip	1,000	1,500
(f) Main rod bearings:		
(1) excessive bore	1,000	1,500
(2) excessive lost motion	1,000	1,500
(g) Side rod bearings, excessive bore	1,000	1,500
230.97 Crank pins:		
(a) General provisions	1,000	2,000
(b) Maintenance: Failure to maintain in safe, suitable condition	1,000	2,000
230.98 Driving, trailing, engine truck axles:		
(a) Condemning defects	1,000	2,000
(b) Journal diameter: Failure to stamp on end of axle	750	1,000
230.99 Tender truck axle: Insufficient diameter	1,000	2,000
230.100 Defects in tender truck axles and journals:		
(a) Tender truck axle condemning defects	1,000	2,000
(b) Tender truck journal condemning defects	1,000	2,000
230.101 Steam locomotive driving journal boxes:		
(a) Driving journal boxes: Failure to properly maintain	1,000	2,000
(b) Broken bearings: Failure to renew	1,000	2,000
(c) Loose bearings: Failure to repair or renew	1,000	2,000
230.102 Tender plain bearing journal boxes: Failure to repair	1,000	1,500
230.103 Tender roller bearing journal boxes: Failure to properly maintain	1,000	1,500
230.104 Driving box shoes and wedges: Failure to properly maintain	1,000	1,500
230.105 Lateral motion:		
(a) Condemning limits: Total lateral motion in excess of	1,000	1,500
(b) Limits exceeded, failure to demonstrate conditions require additional lateral motion	1,000	1,500
(c) Interferes with other parts of steam locomotive	1,000	1,500
230.106 Steam locomotive frame:		
(a) Failure to properly inspect and/or maintain	1,000	2,000
(b) Broken frames, not properly patched or secured	2,500	5,000
230.107 Tender frame and body:		
(a) Failure to properly maintain	1,000	1,500
(b) Height difference between tender deck and steam locomotive cab floor or deck excessive	1,000	1,500
(c) Gangway minimum width excessive	1,000	1,500
(d) Tender frame condemning defects	1,500	3,000
230.108 Steam locomotive leading and trailing trucks:		
(a) Failure to properly maintain	1,000	1,500
(b) Safety chain, suitable safety chain not provided	1,000	1,500
(c) Insufficient truck clearance	1,000	2,000
230.109 Tender trucks:		
(a):		
(1) Tender truck frames	1,000	2,000
(2) Tender truck center plate	1,000	2,000
(b) Tender truck bolsters: Failure to properly maintain	1,500	3,000
(c) Condemning defects, springs and/or spring rigging	1,000	2,000
(d) Truck securing arrangement: Not properly maintained	1,000	1,500
(e) Side bearings, truck centering devices	1,000	2,000
(f) Friction side bearings: Run in contact	1,000	2,000
(g):		
(1) Side bearings, failure to equip rear trucks with	1,000	2,000
(2) Insufficient clearance of	1,000	2,000
230.110 Pilots:		
(a) General provisions	1,000	1,500
(b) Clearance, insufficient or excessive	1,000	1,500
230.111 Spring rigging:		
(a) Arrangement of springs and equalizers	1,000	2,000
(b) Spring or spring rigging condemning defects	1,000	2,000
230.112 Wheels and tires:		
(a) Improperly Mounted, excess variance in axle diameter	1,500	3,000
(b) Out of gage	1,000	2,000

Section	Violation	Willful violation
(c) Flange distance variance, excessive	1,000	2,000
(d) Tire thickness, insufficient	1,000	2,000
(e) Tire width, insufficient	1,000	2,000
230.113 Wheels and tire defects:		
(1) Failure to repair	1,000	2,000
(2) Welding on, except as otherwise provided for	1,500	3,000
(a) Cracks or breaks in	1,000	2,000
(b) Flat spots	1,000	2,000
(c) Chipped flange	1,000	2,000
(d) Broken rim	1,000	2,000
(e) Shelled-out spots	1,000	2,000
(f) Seams	1,000	2,000
(g) Worn flanges, excessive wear	1,000	2,000
(h) Worn treads, excessive wear	1,000	2,000
(i) Flange height, insufficient or excessive	1,000	2,000
(j) Rim thickness, insufficient	1,000	2,000
(k) Wheel diameter, excessive variance	1,000	2,000
230.114 Wheel centers:		
(a) Filling blocks and shims	1,000	2,000
(b) Wheel center condemning limits, failure to repair	1,000	2,000
(c) Wheel center repairs	1,000	2,000
(d) Counterbalance maintenance	1,000	2,000
230.115 Feed water tanks:		
(a) General provisions	1,000	2,000
(b) Inspection frequency, failure to inspect as required	1,000	1,500
(c) Top of tender: Improperly maintained and/or equipped	1,000	1,500
230.116 Oil tanks:		
(1) Failure to properly maintain	2,500	5,000
(2) Failure to equip with complying safety cut-off device	5,000	7,500

[1] Failure to observe any condition for movement set forth in § 230.12 will deprive the railroad of the benefit of the movement-for-repair provision and make the railroad and any responsible individuals liable for penalty under the particular regulatory section(s) concerning the substantive defect(s) present on the locomotive at the time of movement. Failure to comply with § 230.12 will result in the lapse of any affected waiver.

PART 231—RAILROAD SAFETY APPLIANCE STANDARDS

Sec.

231.0 Applicability and penalties.
231.1 Box and other house cars built or placed in service before October 1, 1966.
231.2 Hopper cars and high-side gondolas with fixed ends.
231.3 Drop-end high-side gondola cars.
231.4 Fixed-end low-side gondola and low-side hopper cars.
231.5 Drop-end low-side gondola cars.
231.6 Flat cars.
231.7 Tank cars with side platforms.
231.8 Tank cars without side sills and tank cars with short side sills and end platforms.
231.9 Tank cars without end sills.
231.10 Caboose cars with platforms.
231.11 Caboose cars without platforms.
231.12 Passenger-train cars with wide vestibules.
231.13 Passenger-train cars with open-end platforms.
231.14 Passenger-train cars without end platforms.
231.15 Steam locomotives used in road service.
231.16 Steam locomotives used in switching service.
231.17 Specifications common to all steam locomotives.
231.18 Cars of special construction.
231.19 Definition of ''Right'' and ''Left.''
231.20 Variation in size permitted.
231.21 Tank cars without underframes.
231.22 Operation of track motor cars.
231.23 Unidirectional passenger-train cars adaptable to van-type semi-trailer use.
231.24 Box and other house cars with roofs, 16 feet 10 inches or more above top of rail.
231.25 Track motorcars (self-propelled 4-wheel cars which can be removed from the rails by men).
231.26 Pushcars.
231.27 Box and other house cars without roof hatches or placed in service after October 1, 1966.
231.28 Box and other house cars with roof hatches built or placed in service after October 1, 1966.
231.29 Road locomotives with corner stairways.
231.30 Locomotives used in switching service.
231.31 Drawbars for freight cars; standard height.
231.33 Procedure for special approval of existing industry safety appliance standards.