AUTHENTICATED
U.S. GOVERNMENT
INFORMATION
GPO

SHARING OF ELECTRONIC MEDICAL INFORMATION BETWEEN THE U.S. DEPARTMENT OF DEFENSE AND THE U.S. DEPARTMENT OF VETERANS AFFAIRS

HEARING

BEFORE THE

SUBCOMMITTEE ON OVERSIGHT AND INVESTIGATIONS

OF THE

COMMITTEE ON VETERANS' AFFAIRS
U.S. HOUSE OF REPRESENTATIVES

ONE HUNDRED TENTH CONGRESS

FIRST SESSION

OCTOBER 24, 2007

Serial No. 110–57

Printed for the use of the Committee on Veterans' Affairs

U.S. GOVERNMENT PRINTING OFFICE

39–466 WASHINGTON : 2008

For sale by the Superintendent of Documents, U.S. Government Printing Office
Internet: bookstore.gpo.gov Phone: toll free (866) 512–1800; DC area (202) 512–1800
Fax: (202) 512–2104 Mail: Stop IDCC, Washington, DC 20402–0001

COMMITTEE ON VETERANS' AFFAIRS

BOB FILNER, California, *Chairman*

CORRINE BROWN, Florida
VIC SNYDER, Arkansas
MICHAEL H. MICHAUD, Maine
STEPHANIE HERSETH SANDLIN, South Dakota
HARRY E. MITCHELL, Arizona
JOHN J. HALL, New York
PHIL HARE, Illinois
MICHAEL F. DOYLE, Pennsylvania
SHELLEY BERKLEY, Nevada
JOHN T. SALAZAR, Colorado
CIRO D. RODRIGUEZ, Texas
JOE DONNELLY, Indiana
JERRY McNERNEY, California
ZACHARY T. SPACE, Ohio
TIMOTHY J. WALZ, Minnesota

STEVE BUYER, Indiana, *Ranking*
CLIFF STEARNS, Florida
JERRY MORAN, Kansas
RICHARD H. BAKER, Louisiana
HENRY E. BROWN, JR., South Carolina
JEFF MILLER, Florida
JOHN BOOZMAN, Arkansas
GINNY BROWN-WAITE, Florida
MICHAEL R. TURNER, Ohio
BRIAN P. BILBRAY, California
DOUG LAMBORN, Colorado
GUS M. BILIRAKIS, Florida
VERN BUCHANAN, Florida

MALCOM A. SHORTER, *Staff Director*

SUBCOMMITTEE ON OVERSIGHT AND INVESTIGATIONS

HARRY E. MITCHELL, Arizona, *Chairman*

ZACHARY T. SPACE, Ohio
TIMOTHY J. WALZ, Minnesota
CIRO D. RODRIGUEZ, Texas

GINNY BROWN-WAITE, Florida, *Ranking*
CLIFF STEARNS, Florida
BRIAN P. BILBRAY, California

Pursuant to clause 2(e)(4) of Rule XI of the Rules of the House, public hearing records of the Committee on Veterans' Affairs are also published in electronic form. **The printed hearing record remains the official version.** Because electronic submissions are used to prepare both printed and electronic versions of the hearing record, the process of converting between various electronic formats may introduce unintentional errors or omissions. Such occurrences are inherent in the current publication process and should diminish as the process is further refined.

CONTENTS

October 24, 2007

Page

Sharing of Electronic Medical Information Between the U.S. Department of Defense and the U.S. Department of Veterans Affairs 1

OPENING STATEMENTS

Chairman Harry E. Mitchell 1
Prepared statement of Chairman Mitchell 52
Hon. Ginny Brown-Waite, Ranking Republican Member 2
Prepared statement of Congresswoman Brown-Waite 52

WITNESSES

U.S. Department of Defense:
Brigadier General Douglas J. Robb, M.D., Commander, 81st Medical Group, Keesler Air Force Base, Biloxi, MS, Department of the Air Force 4
Prepared statement of General Robb 53
Colonel Keith Salzman, M.D., MPH, FAAFP, FACHE, Chief of Informatics, Western Region Medical Command and Madigan Army Medical Center, Tacoma, WA, Department of the Army 19
Prepared statement of Colonel Salzman 65
Lieutenant Commander James Lawrence Martin, Regional Information Systems Officer, Navy Medicine East, Medical Service Corps, Department of the Navy 23
Prepared statement of Commander Martin 71
Colonel Gregory Andre Marinkovich, M.D., Data Management Product Line Functional Manager, Clinical Information Technology Program Office, Military Health System, Medical Service Corps, Department of the Army 25
Prepared statement of Colonel Marinkovich 73
Stephen L. Jones, DHA, Principal Deputy Assistant Secretary of Defense (Health Affairs) 39
Prepared statement of Dr. Jones 79

U.S. Government Accountability Office, Valerie C. Melvin, Director, Human Capital and Management Information Systems Issues 13
Prepared statement of Ms. Melvin 54

U.S. Department of Veterans Affairs:
Howard B. Green, PMP, Deputy, Operations Management, Veterans Health Information Technology, Office of Enterprise Development, Office of Information and Technology 21
Prepared statement of Mr. Green 68
Gerald M. Cross, M.D., FAAFP, Principal Deputy Under Secretary for Health, Veterans Health Administration 37
Prepared statement of Dr. Cross 74

Page

MATERIAL SUBMITTED FOR THE RECORD

Post Hearing Questions and Responses for the Record:
Hon. Harry E. Mitchell, Chairman, and Hon. Ginny Brown-Waite, Ranking Republican Member, Subcommittee on Oversight and Investigations, Committee on Veterans' Affairs, to Hon. David M. Walker, Comptroller General, U.S. Government Accountability Office, letter dated February 5, 2008, and response from Valerie C. Melvin, Director, Human Capital and Management Information Systems Issues, U.S. Government Accountability Office, letter dated March 7, 2008 83
Hon. Harry E. Mitchell, Chairman, and Hon. Ginny Brown-Waite, Ranking Republican Member, Subcommittee on Oversight and Investigations, Committee on Veterans' Affairs, to Hon. Robert M. Gates, Secretary, U.S. Department of Defense, letter dated February 5, 2008, and DoD responses 92
Hon. Harry E. Mitchell, Chairman, and Hon. Ginny Brown-Waite, Ranking Republican Member, Subcommittee on Oversight and Investigations, Committee on Veterans' Affairs, to Hon. James B. Peake, Secretary, U.S. Department of Veterans Affairs, letter dated February 5, 2008, and VA responses 96
The Health Executive Council Highlights, FY 2003–First Quarter for FY 2008, dated June 10, 2008 98

SHARING OF ELECTRONIC MEDICAL INFORMATION BETWEEN THE U.S. DEPARTMENT OF DEFENSE AND THE U.S. DEPARTMENT OF VETERANS AFFAIRS

WEDNESDAY, OCTOBER 24, 2007

U.S. HOUSE OF REPRESENTATIVES,
COMMITTEE ON VETERANS' AFFAIRS,
SUBCOMMITTEE ON OVERSIGHT AND INVESTIGATIONS,
Washington, DC.

The Subcommittee met, pursuant to notice at 10:03 a.m., in Room 334, Cannon House Office Building, Hon. Harry E. Mitchell [Chairman of the Subcommittee] presiding.

Present: Representatives Mitchell, Space, Walz, Rodriguez, and Brown-Waite.

OPENING STATEMENT OF CHAIRMAN MITCHELL

Mr. MITCHELL. Good morning and this hearing will come to order. This is the Subcommittee on Oversight and Investigations. And today's hearing is on Sharing of Electronic Medical Information between the U.S. Department of Defense (DoD) and the U.S. Department of Veterans Affairs (VA).

I want to thank everyone for being here today and I am very pleased that so many people could attend this oversight hearing on Sharing Electronic Medical Information between the Departments of Defense and Veterans Affairs.

This is a critically important issue. Thousands of our service men and women require and will continue to require significant medical care as a result of the conflicts in Iraq and Afghanistan. The most seriously injured of our Operation Enduring Freedom (OEF) and Operation Iraqi Freedom (OIF) veterans may need a lifetime of care. But even veterans returning with no visible injury may need assistance with Post Traumatic Stress Disorder (PTSD) or mild Traumatic Brain Injury (TBI).

The DoD and VA are sharing more and more patients. For example, the patients at the VA's four polytrauma rehabilitation centers are almost always still on active duty. And active-duty servicemembers will be veterans sooner or later.

A review by the VA's Inspector General shows that of the 500,000 or so servicemembers who left active duty in fiscal year 2005, 92 percent had an encounter with a military health system while on active duty that resulted in a diagnostic code. In other words, nearly all of the veterans who go to the VA to get medical

care will have military medical records that should be available to VA healthcare providers.

If anyone can convince the American people of the importance of electronic medical records, it is our first panel. Specialist Channing Moss is an Army soldier who was shot with a rocket propelled grenade that lodged in his body. He is alive and walking today because the medical evacuation team and the combat surgeons who operated on him put their own lives in danger in order to remove live ordnance from Specialist Moss.

Brigadier General Douglas Robb was Chief Surgeon of United States Central Command (CENTCOM) at the time. And he will discuss how important it was that a copy of the x-ray taken at the forward field hospital was available to the clinicians at Landstuhl before Specialist Moss arrived.

DoD and VA have been working on electronic exchange of medical information for many years. For most of that time, the story is not a happy one. I am nevertheless pleased to be able to say that DoD and VA have made more progress in the past 12 to 18 months than they have made in the preceding decade.

But there is still much to be done. There is no reason why, in this day and age, that DoD and VA cannot electronically share the information necessary to treat our servicemembers and veterans. We should not have to wait any longer.

I hope and I expect that DoD and VA will tell us today that by no more than a year from now clinicians at DoD and VA will have full electronic access to the medical information they need to treat their patients whether that information resides in computers owned by DoD or the VA.

[The prepared statement of Chairman Mitchell appears on p. 52.]

Mr. MITCHELL. Before I recognize the Ranking Republican Member for her remarks, I would like to swear in our witnesses. I would ask all the witnesses from all the panels to please rise and raise your right hand.

[Witnesses sworn.]

Mr. MITCHELL. Thank you.

I would now like to recognize Ms. Brown-Waite for her opening remarks.

OPENING STATEMENT OF HON. GINNY BROWN-WAITE

Ms. BROWN-WAITE. Thank you very much, Mr. Chairman, and I thank you for yielding.

It is a good idea to hold this hearing to review the status of the electronic medical record sharing between DoD and VA. This Subcommittee has already held two hearings in the 110th Congress on the issue of seamless transition of our servicemembers. And in the 109th, various hearings were also held. It is a very important issue.

The first hearing of this Committee was held in March and the second one in May, both of which focused primarily on the sharing of critical medical information of wounded servicemembers and the sharing of that information between DoD and the VA.

I want to assure the witnesses here today this issue is of the utmost importance to Members of this Committee and certainly the full Committee and I believe every Member of Congress.

I am very pleased that the Chairman requested that representatives from DoD testify here today. It will be important to hear their perspective on the timely exchange of critical medical information between DoD and VA for the seamless continuum of delivering healthcare to our servicemembers.

I look forward to hearing the steps DoD has taken to allow critical medical information to be reviewed by VA when active-duty servicemembers are transferred to VA facilities.

In addition, I will be interested in hearing from VA on whether technological obstacles or bureaucratic intransigence prevent this from occurring today.

This past week, staff members visited Keesler Air Force Base and the VA medical center in Biloxi, Mississippi, to see how the Air Force and VA are coming together in VA/DoD resource sharing.

Unfortunately, the progress in this area is a result of the devastation of Hurricane Katrina and the dynamic personalities of senior leadership at these facilities and not the "Veterans Administration and the Department of Defense Health Resources Sharing and Emergency Operations Act 1982."

It does appear, Mr. Chairman, I agree with you, that the ball has moved forward more in the last, say, 24 months than the last 25 years. It is a shame that it took Hurricane Katrina, the debacle at Walter Reed, and the devastating wounds of war to expedite progress between the two largest Federal bureaucracies.

I am also looking forward to hearing from representatives of both departments about how they plan to implement the recommendations of the recently released Dole-Shalala Commission report and the Veterans Disability Benefits Commission report.

Again, thank you very much, Mr. Chairman, for holding this hearing. The issue is very important to every Member of Congress and I believe every American. And with that, I yield back the balance of my time.

[The prepared statement of Congresswoman Brown-Waite appears on p. 52.]

Mr. MITCHELL. Thank you.

I ask unanimous consent that all Members have 5 legislative days to submit a statement for the record. Seeing no objections, so ordered.

Before we hear from our first panel, we are going to take a look at a short video about Channing Moss, the soldier that I spoke about in my opening statement. The Subcommittee appreciates the cooperation of the Army Times in making this video available.

If you would like to move around to see this, please do.

[Video shown.]

Mr. MITCHELL. General Robb will speak to us in a minute about the importance of the electronic transmission of Specialist Moss' medical records.

But before we hear from General Robb, the Subcommittee would like to thank the Army Times and in particular Gina Cavallaro, James Lee, and Chris Brass who put this video together.

Ms. Cavallaro, would you please stand? We want everybody to know that she was the first one to report this story more than a year ago and I would like to thank her on behalf of the Subcommittee and indeed on behalf of the country for bringing this truly inspiring story to light. Thank you.

At this time, we will hear from General Robb and he will have 5 minutes to make his presentation. Thank you.

STATEMENT OF BRIGADIER GENERAL DOUGLAS J. ROBB, M.D., COMMANDER, 81ST MEDICAL GROUP, KEESLER AIR FORCE BASE, BILOXI, MS, DEPARTMENT OF THE AIR FORCE, U.S. DEPARTMENT OF DEFENSE

General ROBB. Mr. Chairman and Members of the distinguished Subcommittee, thank you for inviting me here today. I am Brigadier General Douglas J. Robb and I served as the Command Surgeon, United States Central Command from 2004 to 2007.

Currently, I am serving as the Keesler Medical Center Commander and as the Senior Market Manager for the Gulf Coast Multi-Service Market Office, Keesler Air Force Base, Biloxi, Mississippi.

Thank you for the opportunity to express my advocacy for a healthcare information systems platform and an electronic medical record that supports the world-class quality healthcare that our military and Veterans Administration healthcare facilities provide to our DoD and VA beneficiaries.

In my previous assignment as the CENTCOM surgeon, I had the opportunity to witness the evolution of our deployed healthcare information systems platforms that support access to patient care data as our wounded warriors move through the continuum of care from our combat casualty care lifesavers to our forward surgical teams, to our theater hospitals, and then on to our definitive care facilities at hospitals such as Landstuhl, Walter Reed, Bethesda, Wilford Hall, and our VA polytrauma centers.

As you saw in the video, on March 16, 2006, Specialist Channing Moss was severely injured in an attack in southeastern Afghanistan. The lifesaving care performed by the combat lifesavers in his unit and the subsequent and surgical stabilization by the forward surgical team and the Bagram Theater Hospital saved his life.

What was also lifesaving was the ability of the surgeons at Landstuhl Hospital in Germany who would receive Moss less than 24 hours after his initial injury and the surgeons at Walter Reed to be able to view his operative notes and his x-rays before the patient arrived at their hospitals. This was accomplished via the Joint Patient Tracking Application (JPTA), which is part of the DoD's deployed healthcare information systems platform.

As an aside here, and you noticed in the video, that Moss said he was going to fight to live. And it is our task as medics in the combat environment to give him that opportunity to fight to live. And I was privileged to serve with those men and women, our medics in the Area of Rescue (AOR) who saved Moss' life, and especially to Dr. Oh did a great job there with the forward surgical teams.

Earlier that year, and again in Afghanistan, a general surgeon and the Commander of one of our other forward surgical teams

commented on his excitement when he was able to send completely digital trauma resuscitation and operative reports to the Bagram Combat Support Hospital, again before the patient arrived.

This is something that had been his vision for our forward surgical teams for a long time. During his previous assignment, he had been a surgeon at Landstuhl, Germany, and was frustrated by the lack of medical data from the forward surgical teams' initial surgical resuscitation. He was happy that this had been corrected.

Now, currently in my position as the Senior Market Manager for the Gulf Coast Multi-Service Market through the collaborative and joint DoD and VA initiatives, we are entrusted with the in-garrison care of our DoD and VA beneficiaries. In this capacity, we also require a healthcare information system platform that supports access to real-time patient data for our shared population.

Our patients are from the Gulf Coast and are treated in the DoD and VA hospitals and clinics that are often located in proximity from Biloxi to Panama City. Our goal is to provide quality services in a seamless manner. This requires an integrated healthcare information systems platform that is user friendly for our jointly operating DoD and VA healthcare facilities.

Significant progress has been made in the past few years to bridge this gap of electronic information flow. Just last month, our staffs were excited when the Bidirectional Health Information System (BDHI) became available at some of our facilities. Although not at its full capability yet, it is a very positive step in the right direction in our ability to view patient care data from both VA and DoD facilities.

In conclusion, as a former Combatant Command Surgeon and currently as the Multi-Service Market Manager, I continue to be a strong advocate for healthcare information systems. We need to support heroes like Channing Moss as they move through our deployed and garrison-based continuum of care from the combat casualty to the forward surgical resuscitation, to theater hospitalization, and finally our DoD and medical centers and clinics.

The current capability has proven itself in contributing to the quality of care for our beneficiaries and with your support, I believe we can continue to improve upon our already existing and evolving capability and further share and make available the full spectrum of electronic health information between our Department of Defense and Department of Veterans Affairs.

Mr. Chairman, Committee Members, thank you again for allowing me this opportunity to appear before you.

[The prepared statement of General Robb appears on p. 53.]

Mr. MITCHELL. Thank you, General Robb.

I have just got a couple questions and I am not sure I understand all the acronyms or all the——

General ROBB. Yes, sir.

Mr. MITCHELL [continuing]. Things that I am going to throw out and ask you about, but I am sure you do. It is our understanding that the Joint Patient Tracking Application is currently used to get inpatient information from the theater but that some in DoD are trying to require clinicians in the theater to use an application called Tactical Command and Control (TC2).

In your expert opinion, will doctors in the theater actually use this application, TC2, for inpatient documentation of clinical notes? That is one question.

And if use of the JPTA for documenting encounters in theater is stopped, could this negatively impact delivery of healthcare for our most seriously injured as they travel through the continuum of the VA?

General ROBB. Well, sir, as far as the TC2, which is the current inpatient platform documentation system, that was implemented and introduced into the theater of operations after I left as the Combatant Surgeon. And as a result, in my current capacity, I have not been keeping up as much as I maybe should with my previous job, but my views on it in general are this.

The initial inpatient module that was introduced into the theater did not accomplish what it was intended to do for a couple of reasons. Primarily it was because it was not user friendly for the providers. So if something is not user friendly by the providers and also providing a useful note to convey patient care information and data from one provider to another provider, then the providers are probably not going to accept that as a platform to use to take care of, remember, their patients.

Number two, another reason was I believe at the time that was a stand-alone system and it did not allow information to flow. And as a result, when the Joint Patient Tracking Application was introduced into the theater to track patients from level two, level three, all the way back to the United States, the clinicians, the providers themselves figured out that they can put patient care data on that platform that, as we described in Moss' case, we are able to move patient care data along the continuum before and during and after the patient moved through the system.

So that is the system that needs to be in place. The current inpatient module, if it is user friendly, and the providers decide that it is a useful note, okay, and it is real-time accessible, then it will be successful, yes, sir.

Your second question about JPTA if it stopped right now, I think, again, my direction when I was the Command Surgeon was when the inpatient module is user friendly, provides a useful note, and provides real-time patient care data, and we can view inpatient data from real-time, before, after, and during their movement, then we can switch from the Joint Patient Tracking Application over to whatever system is going to work for us on the Armed Forces Health Longitudinal Technology Application (AHLTA) deployed platforms.

But until then, I think we need to allow the providers the opportunity to move the patient care data that is useful to them.

Mr. MITCHELL. Thank you.

After seeing this video about Specialist Moss, I can imagine that great things are happening like that all over today.

General ROBB. Yes, sir.

Mr. MITCHELL. However, I understand that there still may be some problems getting information from the field medics to hospitals and to the VA.

What more can be done to ensure that this process goes smoothly?

General ROBB. Well, again, as I described in my testimony, we have some monumental, I think, steps that have occurred, nothing occurs as fast as we want it to, but that have occurred. One of them is the Bidirectional Health Information System.

And, again, when we demonstrated that, I mean, we received it the day before and the next day, we flicked the switch and we got everybody together. But the opportunity for us through a bridge portal to view AHLTA data in VistA, which is the DoD system, view it in the Veterans Administration system, and then look from the Veterans Administration system into the DoD system to be able to see outpatient notes, lab, x-rays, pharmacy, allergies, we are there.

The inpatient piece of it, that is going to be fielded here. At some places, it is already fielded. But the ability to field it at my particular location will be by next summer. That will be a tremendous milestone for us to accomplish. And for us in the Gulf Coast region and the patients that we share with our veterans to be able to look at each other's healthcare data, I am excited about that.

The opportunity that we have had for the connections between the outpatient modules and then as we watch the evolution of the inpatient module, if that becomes connected, I know the outpatient is, we can view outpatient data from the field from any of our DoD locations and now through BDHI into the VA system.

And once the inpatient module becomes successful, then the ability to view that again will advance again and contribute to the healthcare of our veterans.

Mr. MITCHELL. Thank you.

Ms. Brown-Waite?

Ms. BROWN-WAITE. Thank you, Mr. Chairman.

By the way, congratulations on your recent promotion to Brigadier General. It certainly is refreshing to see that the military still rewards leaders for their candor and their refreshing approach to real-life problems.

Let me ask you, if JPTA did not exist in the combat theater, how would, for example, the operative notes and x-rays be sent with the patient within 24 hours from, for example, in the video that we saw from Afghanistan to Landstuhl, Germany to be used by the accepting surgeon there, whether it is a situation like we just saw or whether it is TBI? How would that information be transmitted?

General ROBB. Well, under the old paradigm and the paradigm that I lived in when I first came to U.S. Central Command was we were moving paper records. In other words, if you had the opportunity to—I will regress a little bit. The patients move so fast through our system today. From the time of wounding on the battlefield to the time you are under the knife, it is sometimes as little as 20 minutes to your forward surgical team.

And then you are usually in a combat theater hospital within an hour, sometimes two or three. And then you are at Landstuhl usually under 24 hours and sometimes you are at Walter Reed in 24 hours.

And so you can imagine that under the old paradigm with the paper record, that may not keep up with the patient. And so, you know, a lot of times, physicians are moving, especially in the mass casualty situation, are moving so fast through the system that you

complete the paperwork after the patient leaves. And so then it is hard to give the hard copy to move with the patient.

So that was a dilemma we faced. And that is why it is important that we have a deployed healthcare information system platform that allows it so that you can enter the data. It is okay to enter the data after the patient leaves, but then it needs to be able to be viewed.

So, you know, hypothetically you could put the data in or do the op note or whatever while the patient is being shipped to the next level. And so by the time they get to the next level, whether it is the theater hospital or to Walter Reed or to Landstuhl, it is in the system for the receiving physicians to see. And, again, that prepares that team for what is coming with them. They can anticipate the specialties.

And so the clinicians, actually specifically the joint theater trauma system team, and the directors embraced this platform, the Joint Patient Tracking Application platform to be able to hang that type of data so that they could inform their colleagues along the continuum of care what was coming to them so they could better prepare for the care when they received them.

Ms. BROWN-WAITE. Obviously that is a giant step forward.

We have heard from providers in the combat theater that the current effort to document inpatient medical notes useable or very difficult at best that these actually were discouraged. This was after two failed implementations of the Composite Healthcare System (CHCS) legacy system.

To the best of your recollection from your time in theater, was JPTA discouraged and, if so, by whom? And I guess we hope that candor is still there.

General ROBB. Well, I am a physician by trade. And so I understand how physicians talk to each other and I understand what needs to be passed from one physician to another.

My staff, myself, and then the joint theater trauma system embraced the capability that the joint theater tracking application brought to us besides just the patient tracking application piece of it.

And as a result, we made a decision that this was the way that we were going to support the movement of data for en route patient care because it was the right thing to do. And so we supported it from my staff and then subsequently through the component surgeons and then down to the different levels. That was the direction that we gave them for inpatient documentation. And that is what we executed.

Did everybody accept it? It was something different. And change is always difficult.

Ms. BROWN-WAITE. But was it actually discouraged?

General ROBB. Was it actually discouraged? There were some locations that did not embrace it as much as others, yes, ma'am.

Ms. BROWN-WAITE. If you are not comfortable saying it now, I would like to know those locations so that we can make sure that regardless of where the injury takes place that we have the best records being transferred. It is not about the staff.

General ROBB. Right.

Ms. BROWN-WAITE. With all due respect, it is not about the doctors who do wonderful work. It is about making sure that it is a system——

General ROBB. Yes, ma'am.

Ms. BROWN-WAITE [continuing]. That works well on behalf of the patient.

General ROBB. Yes, ma'am.

Ms. BROWN-WAITE. Thank you very much, General.

General ROBB. Yes, ma'am.

Ms. BROWN-WAITE. I yield back.

Mr. MITCHELL. Thank you.

Congressman Walz?

Mr. WALZ. Thank you, Chairman.

And thank you, General. A special thank you for your service in where you are at in providing medical care which I think is without a doubt the best surgical and the best medical care ever given to warriors in the history of mankind. And that has been an amazing success story.

And this issue and this topic of medical records is critically important. I understand, and many of us, I think, oversimplify what goes into this, what data needs to be on there. And I represent the part of Minnesota that has the Mayo Clinic and this is a conversation I have had many, many times on this, on a broader area of healthcare in general, and what is going to be done.

Now, it looks like and what I am hearing is I am very optimistic, too, that massive progress has been made. I think for our perspective here in Congress, the end result, the progress, the improved medical records, it is going to help in terms of patient care, cost, research, all of those things that go with medical records.

My question to you is, and I know again some of these have to be subjective, what do you attribute what appears to be an increased pace of change, an increased pace of trying or a sense of urgency to implement this idea of data sharing and electronic medical records, or do you think it has just been on a continuum and it is finally reaching fruition where it has gotten to where we can get the types of things you are talking about?

General ROBB. Well, I think, of course, you know it was the President's vision that we go this direction as a Nation. And as I spend time also in my professional capacity with my state organizations and associations from the State of Florida, they are wrestling again with how are they as a state going to come up with an electronic medical record or healthcare information systems platform to support that vision.

If it were easy, I think one of the states would have figured this out already. And so I applaud the Department of Defense again for leading the charge. You know, sometimes we make some of our best advances in crisis and I think that has probably been part of the addition to the momentum of where we are going, the sense or urgency, because there is a lot of competing priorities out there.

I believe, as we all believe, that we have the interest of our patients, whether they are civilian, whether they are veterans, or whether they are active duty, at heart. And I believe as a Nation and with the Department of Defense and with the Department of Veterans Affairs and the Federal Government in the lead on this,

I think we have the opportunity to set the standard for what is an electronic health record or, even bigger, what I call a health information systems platform to support patient care as we want it to be in the future.

Mr. WALZ. One of the questions that always comes up here is the Congress' role in providing not only oversight but resources. In your experience now, are the resources there to make this transition because many of us up here understand it is a scarce amount of resources and what we are getting out of it?

But this issue is so broad and so important and especially in the care of our veterans and seamless transition. I kind of ask the question, the last question with a little bit of leaning toward, did Walter Reed wake us all up and those types of things? Was this one part of it?

And I guess my question to you is, do you feel that the resources are there, the commitment is there to get this right this time?

General ROBB. I think the oversight and the emphasis is there, absolutely. This is a tremendous monumental paradigm shift from where we were and to where we are going. And it is taking a lot of resources, probably more than we maybe had anticipated.

I think we have the brain power to do it. I think we have some of the solutions. In fact, I think we have most of the solutions, at least to get us through the interim. The next generation of platform is something that we need to work on. But for the interim, for the next 12 to 18 to 24 months, I believe we have some solutions in place.

Could we accelerate that with resources? The answer is potentially. But I am not in that business, so I do not know if we can go any faster if, let us say, either more manpower or money was thrown at it. Sir, I do not know that.

But I know that they have a road map way ahead which you will hear later that I am very optimistic about in making this happen. And if they can have the opportunity to answer that question later, then they can probably tell you whether or not the resourcing piece of it is something that could either accelerate this or slow it down, yes, sir.

Mr. WALZ [presiding]. Very good. Thank you, General.

Mr. Rodriguez?

Mr. RODRIGUEZ. Thank you very much. And I apologize for not being here, although I hear my colleague is very optimistic.

This is my ninth year on this Committee with the absence of 2 years, and about 5 or 8 years prior to me getting on here, we had been talking about this process. And so I am pleased and glad that we are finally making some inroads, although it has taken a long time.

And we talk about it is monumental, but it is monumental from our part when we have been talking about this for a significant amount of time. And, you know, until I see it, in all honesty, I will not believe it. I can only react based on the fact that we know the Department of Defense has been stonewalling us on a couple of items on this area and not you personally, General.

And I want to personally thank you for your efforts. But, you know, we have to get this straight because there are a lot of other things that took us 20 years to finally tell some of our veterans

from Project 112 that when they told us there was no experimental, you know, exercises being done on our own soldiers then we found out that was the case.

So I would like to be able to get that documentation and also go back and addressing some of the needs of those soldiers in the sixties and seventies that we did some of those things and experimented with some of those gases and other things with them that the Department of Defense failed to—not failed—actually denied us that information for over 20 years. And, you know, I experienced that on this Committee.

Now, I have also witnessed that the process to get there is, you know, because one after another have shown us some models of how we can do that and make that happen, and I want to throw a question to you in terms of—because at one point, I was just, you know—well, I am frustrated with both and that we need almost an external group to come in here and take care of it for you guys, both the Department of Defense and the VA when it comes to our computers, especially in terms of what happened with the loss of the information in the VA.

And so I was wondering if in terms of expediting this, would it help to get some external groups to come in and take care of it in terms of the high tech stuff that is required?

General ROBB. That is kind of out of my area of expertise. I am an operator and an executor. And I am the one that executes what you all give me. And I am not in what I will call the developmental arena. So, sir, I have to pass that question on to——

Mr. RODRIGUEZ. The second question, as we speak now, we hear the Department of Defense doing some diagnosing already on some 20 something thousand personality disorders which automatically identifies preexisting condition.

Are we having any other of those kind of things occurring at the present time, that we are going to have some additional problems in the future? Are there some problems specifically with some of that might be occurring at the Department of Defense?

General ROBB. Sir, I do not think I understand your question.

Mr. RODRIGUEZ. There was a group of some 20,000 soldiers that were identified with personality disorders. And when that occurs, when that soldier leaves, and I had a couple of them come and visit me, that presupposes a preexisting condition which means they do not qualify for any kind of benefits or anything when they try to go if that is their diagnosis. And so the Department of Defense, it is my understanding, did these diagnoses.

Where are we at on that kind of stuff?

General ROBB. Sir, that is again probably out of my area of expertise because you are talking about accession standards in the way we access our individuals' preexisting conditions, of course, or conditions that the medical profession and through the administrative channels also believe existed prior to service. And then that particular condition arises or surfaces when they are in the military.

But as far as what we are doing to better pick up on some of those preexisting conditions, that, sir, again, is out of my area of expertise.

Mr. RODRIGUEZ. Okay. And I would also want to go back as we move on this to some of our previous veterans. We want to do the right thing now, but we also want to go back to Vietnam and some of those areas where we did have and at one point had identified some 5,600, maybe even more, because I was gone for a couple of years, so close to 6,000 soldiers that we used, you know, nerve gas and other things on our own soldiers, and wanted to see from the Department of Defense, you know, later on, maybe we can get, Mr. Chairman, a little status report on those assessments that were done in the 1960s and 1970s on our soldiers because I know they first said that they only identified some 30 projects and then it went to 40 and the last I heard, it was close to 50-something projects where we had done experimental stuff with our own soldiers, and I want to just get, you know, and that is with the Department of Defense, I just want to get some feedback on that.

General ROBB. Sir, again, that is again out of my area of expertise and I am not aware of that.

Mr. RODRIGUEZ. Thank you very much for what you are doing, sir. A lot of the Members feel optimistic, so you must have said some good things.

General ROBB. Well, I will tell you, the group of folks that I had a chance to work with and work for are medical professionals not only in the CENTCOM area of responsibility but also back here at our, again, our major hospitals and our clinics, and then my opportunity in my current capacity to work with the Veterans Administration. You know, we have all heard the expression from Secretary Nicholson this is not your father's VA. There are a group of dedicated professionals out there in the Veterans Administration that care for our soldiers, sailors, airmen, Marines, coalition forces and they are second to none. And I am proud to be part of that team, yes, sir.

Mr. RODRIGUEZ. And I hope the Department of Defense takes it from the perspective that file belongs to that soldier.

General ROBB. Yes, sir.

Mr. RODRIGUEZ. And they be able to get a grasp of it and be able to have it so that when they move into the VA, and it would be more cost effective for us as a whole, and not to mention in terms of that particular soldier. Thank you.

General ROBB. Yes, sir.

Mr. WALZ. Ranking Member Brown-Waite?

Ms. BROWN-WAITE. General, I just wanted to thank you very much for being here, for your candor, and also for your ability to accept and promote the kind of technology that will certainly help the patient a whole lot more than the past. Lord only knows where the paper trail system is that was there.

Thank you so much.

General ROBB. Yes, ma'am.

Ms. BROWN-WAITE. And please encourage others to follow suit.

General ROBB. Yes, ma'am.

Mr. WALZ. I would echo and associate myself with the Ranking Member's comments generally. It is refreshing to hear this. We have a lot of work to do. Please know that we sit up here as representatives of the American people and we want nothing more

than to provide the highest quality care to our soldiers and our warriors that are out there and as they become veterans.

So you simply need to see us as partners in this. We are glad to have you out there. And I thank you for your time.

General ROBB. Thank you.

Mr. WALZ. We will go ahead and seat the second panel, please. Welcome to our witnesses. Our witness today, Ms. Valerie Melvin, is Director of Human Capital and Management Information Systems Issues for the U.S. Government Accountability Office, the GAO. She will be accompanied by her Assistant Director, Ms. Barbara Oliver. We look forward to her unbiased view on this situation.

And, Ms. Melvin, you are recognized for 5 minutes.

STATEMENT OF VALERIE C. MELVIN, DIRECTOR, HUMAN CAPITAL AND MANAGEMENT INFORMATION SYSTEMS ISSUES, U.S. GOVERNMENT ACCOUNTABILITY OFFICE; ACCOMPANIED BY BARBARA OLIVER, ASSISTANT DIRECTOR, HUMAN CAPITAL AND MANAGEMENT INFORMATION SYSTEMS ISSUES, U.S. GOVERNMENT ACCOUNTABILITY OFFICE

Ms. MELVIN. Thank you. Members of the Subcommittee, I am pleased to be here today to continue the dialog on VA's and DoD's efforts to share electronic medical information and attempts to ensure that active-duty military personnel and veterans receive high-quality healthcare.

As you have mentioned, accompanying me today is Ms. Barbara Oliver, Assistant Director.

As you know, VA and DoD have been pursuing ways to share medical information for nearly a decade. And since 2001, GAO has reported numerous times on their initiatives.

Our last testimony before you on May 8th highlighted the key projects that the two departments have pursued and the substantial work that remained to achieve comprehensive electronic medical records.

At your request, my statement today further discusses the history and status of these efforts.

In this regard, since 1998, VA and DoD have focused on the long-term vision of a single comprehensive lifelong medical record for each servicemember to achieve a seamless transition between the departments.

However, they have faced considerable challenges in their efforts to reach this goal, leading to repeated changes in the focus of and target dates for their initiatives.

Our prior reviews noted weaknesses in project management, oversight, and accountability, and we recommended that the departments develop a comprehensive and coordinated project management plan to guide their efforts.

Since we last testified, each Department has continued developing its own modern health information system to replace existing systems. The modernized systems are based on using computable data, that is data in a format that a computer application can act on, for example, to alert clinicians of a drug allergy.

The departments have begun to implement the first release of an interface between their modernized data repositories and are cur-

rently exchanging computable outpatient pharmacy and drug allergy data at seven VA and DoD sites.

At the same time, the departments have made progress on short-term projects to share health information using their existing systems. Of these, the Laboratory Data Sharing Interface Application is currently implemented at nine sites, allowing the departments to share medical laboratory results.

In addition, the Bidirectional Health Information Exchange or BHIE interface is allowing a two-way view of selected categories of health data on shared patients from VA's and DoD's existing health information systems.

Because BHIE provides access to up-to-date information, the departments' clinicians have expressed interest in its further use. Accordingly, since May, the departments have been expanding BHIE's capabilities and implementation using the interface to connect not only VA and DoD but also DoD's multiple legacy systems which were not previously linked. In this way, the departments have begun sharing more of their current information more quickly.

Beyond these two efforts, various ad-hoc processes that the departments established to provide data on severely wounded servicemembers to VA's polytrauma centers are being used. These processes include manual work-arounds such as scanning paper records for transfer to incompatible systems.

While particularly significant to the treatment of servicemembers who sustain traumatic injuries, as we have testified previously, such laborious processes are generally feasible only because the number of polytrauma patients is small.

Overall, through all of these initiatives, VA and DoD are exchanging health information which is an important accomplishment. However, these exchanges are limited and significant work still remains to achieve the long-term goal of a comprehensive electronic medical record.

Moreover, it remains unclear how all of the initiatives that VA and DoD have undertaken are to be incorporated into an overall strategy for a seamless exchange of health information.

The multiple projects and ad-hoc processes being discussed today highlight the need for further efforts to integrate information systems and automate information exchanges. Yet, VA and DoD are continuing to proceed without a comprehensive project plan and overall strategy to effectively guide their efforts.

As we have previously recommended, the departments need such a plan to help ensure success in reaching their goals.

This concludes my prepared statement. I would be pleased to respond to any questions that you may have.

[The prepared statement of Ms. Melvin appears on p. 54.]

Mr. WALZ. Thank you, Ms. Melvin.

In listening, and I think you heard on the last panel as we were trying to assess where we are at on this progress, what is GAO's assessment as far as a timeline of a real-time viewable, useable platform for these medical records? Do you think it is reasonable or are we a year, are we 2 years, or where are we at from this being in place?

We saw, and heard General Robb talk about, that there has been a momentum. There has been the resources necessary. We have been moving toward it. We are seeing successes.

In your opinion, where are we at in terms of before this is going to be up and running?

Ms. MELVIN. We have seen definite progress in terms of the short-term initiatives that were mentioned today relative to the Bidirectional Health Information Exchange. There are other initiatives related to the laboratory data sharing interface as well as a number of ad-hoc processes that have been put in place, in particular to serve the polytrauma patients who are coming back into the country.

From our assessment, these initiatives definitely bring additional capabilities and services to the clinicians by providing them with more information. However, I am not able to say when the departments would be at a point of having the goal of a longitudinal, comprehensive electronic medical record, which they have indicated was their long-term goal or mission to have, because we have not yet seen their final plans for actually doing that.

As of now, we cannot state when they would have those systems in place. Both departments at this point have told us that they do not have a date for their final modernized systems which are key components of putting in place the overall sharing capability that they have talked about having.

Mr. WALZ. So no data has been expressed? It is just a goal out there to try and get it done?

The reason I ask this is I am optimistic on this. The need to get this done is very apparent, but I do not want to find myself in the position of my colleague from Texas of being here for 9 years and saying I can remember that conversation we had back in October of 2007 and here we are in 2016.

Do you have that fear or do you think that there is a difference now?

Ms. MELVIN. There is a concern that we still have from two perspectives. First of all, as I mentioned in my last response, both departments are still in the process of developing their modernized health information systems. Those are the two systems that we no longer see specific completion dates for.

Beyond that, one of the concerns that we have repeatedly raised in our work is that the departments did not articulate a defined strategy for getting to this final mission. And within that strategy, we would certainly hope that there would be interim milestones as well as a final timeframe for accomplishing this.

Mr. WALZ. Thank you, Ms. Melvin.

Ms. Brown-Waite, the Ranking Member, is recognized.

Ms. BROWN-WAITE. Thank you very much.

I have been here. This is my fifth year here, not fifth term, but fifth year, and served on the Veterans' Affairs Committee. And this has been an ongoing issue and it is almost to the point where it is like déjà vu all over again because the same issue has not yet fully been resolved.

I think we have come a long way. Of course, part of the problem is we do not have any authority over DoD in this Committee. But

I think that there finally seems to be a working relationship there and the belief that Congress is not going to just drop this issue.

In your testimony, you stated that although there are multiple initiatives between the VA and the DoD, there is an important requirement to integrate and automate information exchange. I think you further stated that there is not a clear overall strategy to incorporate this in a seamless exchange of information.

I have been here 5 years. Mr. Rodriguez has been here ten total, nine total. How many times have you stated this same finding?

Ms. MELVIN. Well, we have been reporting on this issue since 2001 and across the multiple reports that we have issued, we have, in fact, made the recommendation and reemphasized that recommendation a number of times.

Ms. BROWN-WAITE. Do you know offhand how many?

Ms. MELVIN. I can provide you that for the record. I do not know offhand at this moment, but we can certainly tell you after this hearing.

[The response was provided in the Post Hearing Questions and Responses for the Record, which appear on p. 83.]

Ms. BROWN-WAITE. Okay. Are you encouraged that there seems to finally be the realization by DoD that this has to happen?

Ms. MELVIN. We are encouraged in seeing the different initiatives, the short-term initiatives that are being put in place. We do see them as an opportunity to provide more information to the clinicians in the immediate.

What we have not seen is the actual plan that VA or DoD would be using to do this. So I hesitate to say that or to speak or render a view of the plan that DoD has at this time because we have not actually seen that plan. I am not familiar with the road map that they have indicated that they have.

Ms. BROWN-WAITE. Have you asked to see it?

Ms. MELVIN. We have asked for their strategies relative to what they are doing. We have not been informed prior to today that there was an actual road map.

Ms. BROWN-WAITE. Okay. With that, I yield back the balance of my time.

Mr. WALZ. Mr. Rodriguez is recognized.

Mr. RODRIGUEZ. Let me ask you in terms of trying to get this accomplished and get it done, do we need to give you any additional leeway or any guidance, you know, or any additional authority to go in? Are you going to be going in again and reassessing where they are at or do you need that additional guidance from us?

Ms. MELVIN. We have previously responded to your request for oversight in this particular area. So certainly to the extent that you would want to have additional oversight, we would certainly be willing to follow through with that.

Mr. RODRIGUEZ. Because it has been an issue that I think we have dealt with. I think they dealt with it for 4 or 5 years prior to even going to GAO. And I am convinced that there is some movement now, but I am concerned that you mentioned just short term, I think mainly because our troops are coming in and it is embarrassing to leave some of these seriously injured troops out there and just transfer them out and fall through the cracks the way they have been falling through the cracks. And that is obvious now.

But we have to come to grips and try to come up with and require them to come up with a long-term strategy.

So I would encourage the Chairman to look in terms of what we might have to do in asking the GAO to continue on this issue for further implementation of that and requiring the DoD to do that and maybe getting the Armed Services Committee, getting Chairman Skelton also aware of our concerns as it deals with our servicemember.

And I am concerned not only with the existing one, but, you know, we are not going back. I am just going back on my own personal experience with them in terms of health. It is kind of like they drop them and then they do not particularly care anymore, you know, and they expect the VA to handle them. And for good reason, you know, if we had that information and follow the soldier, it would help us tremendously, not to mention what it would do to the soldier.

So I would ask the Chairman to see if we can keep on this track and hopefully 10 years from now, we will not be talking about this, but maybe going after some of those other pockets of concerns that I had with those other studies.

While I am here, and maybe you are not the one, we had asked for studies on Project 112. I do not know if you heard me talk about our soldiers that the Department of Defense had used studies on, health studies, you know, where they used nerve gas and other things on ship.

And maybe later on, I would like to see if, you know, we can get a report as to where we are at on that because I have not heard anything. And once again, it is my fault because I have not been here. I was gone for 2 years. But I wanted to get an assessment of that and if you get me that information as to where we are at. And back then, we had identified, as I recall, some 5,600 soldiers, but we were concerned that there might have been more and maybe other projects that were not disclosed where we could ID additional soldiers that might have been impacted with certain forms of studies that were done with plombage and other things because we knew that there were some other exercises that took place that were not part of the 56 projects that were out there.

Ms. MELVIN. Sir, I am not familiar with those studies, but we would be glad to go back and share your concerns and interest with others in our healthcare area who might be more familiar and have them to be in touch with you on that matter.

Mr. RODRIGUEZ. Okay. And also if you have done any studies on the recent diagnosing of soldiers with personality disorders because the other question that would come into play if they did come in with preexisting condition, personality disorders, you know, schizophrenia can have an onset around that age, but those onsets are much earlier.

So the question would be, why did we allow them to get into the military in the first place if that was the case? If you have anything on that, I would appreciate it.

Ms. MELVIN. Okay. Will do.

Mr. RODRIGUEZ. Thank you.

Mr. WALZ. The gentleman from Ohio, Mr. Space, is recognized.

Mr. SPACE. I have no questions, Mr. Chairman. Thank you.

Mr. WALZ. Ranking Member Brown-Waite?

Ms. BROWN-WAITE. Mr. Chairman, I have just one other question for Ms. Melvin.

Have you, in pursuing this issue, had any indication that perhaps part of DoD's reluctance to proceed with the information sharing may be because of a concern with the security of VA's system?

Ms. MELVIN. We have not heard that concern expressed. I would say that most of our studies have focused on the VA/DoD sharing effort from looking within the Department of Veterans Affairs and the relationships that it is having with DoD.

However, I would say that because we are talking about sharing data across networks in particular and a number of multiple systems involved, certainly the security aspect is very critical to what they are doing.

However, we have not gotten specific statements rendered to us relative to concerns with that at the moment.

Ms. BROWN-WAITE. Thank you very much.

And with that, I yield back.

Mr. MITCHELL [presiding]. Thank you.

Mr. Rodriguez?

Mr. RODRIGUEZ. Yes. One last question since the issue of the VA and the documentation and security of that documentation was raised, maybe later on, Mr. Chairman, not so much for the GAO, but for the Chairman to see later on in the next coming year, we get an assessment of where the VA is in terms of that documentation because even then, I think we have talked about trying to get external groups to come in and take care of the computer stuff for them or try to correct that. But unless the GAO has something that is more recent from the last testimony we received, I would like to get some feedback on that.

Ms. MELVIN. We have, if you are talking about their computer security, in particular, we have issued a report. I believe it was on September 19th. What I would like to do is again have our Director who has the expertise relative to security issues to contact you and provide you specific information.

But we have identified some problems and concerns along with progress relative to their overall information security management program that we would be glad to share with you in detail.

Mr. MITCHELL. Thank you. All right. Thank you very much.

Ms. MELVIN. You are very welcome.

Mr. MITCHELL. I would like to welcome Panel Number Three to the witness table. Colonel Keith Salzman is the Chief of Informatics from Madigan Army Medical Center and the Western Region Medical Command. He has been taking the lead with his counterparts at the VA Puget Sound Healthcare System on creating a pilot program for sharing electronic medical information.

Lieutenant Commander James Martin fulfills a similar function at the new truly Federal facility being created by the U.S. Navy and VA out of the Great Lakes and North Chicago Hospitals. Lieutenant Commander Martin has been instrumental in helping create a way for DoD and VA to treat patients at the same facility while fulfilling their missions.

Mr. Howard Green, the Deputy for the Operations Management for Veterans Health Information Technology, Office of Enterprise

Development at the VA is here to discuss where the VA stands in making sure all facilities can access medical information from the DoD as needed.

Finally, Colonel Greg Andre Marinkovich is here representing DoD's Clinical Information Technology Program Office or CITPO which is the DoD organization responsible for implementing sharing agreements throughout the service and theater.

And I would like to thank each of these gentlemen for the work they do on behalf of our veterans and Nation and will recognize Colonel Salzman and all four panelists for 5 minutes. Thank you.

STATEMENTS OF COLONEL KEITH SALZMAN, M.D., MPH, FAAFP, FACHE, CHIEF OF INFORMATICS, WESTERN REGION MEDICAL COMMAND AND MADIGAN ARMY MEDICAL CENTER, TACOMA, WA, DEPARTMENT OF THE ARMY, U.S. DEPARTMENT OF DEFENSE; HOWARD B. GREEN, PMP, DEPUTY, OPERATIONS MANAGEMENT, VETERANS HEALTH INFORMATION TECHNOLOGY, OFFICE OF ENTERPRISE DEVELOPMENT, OFFICE OF INFORMATION AND TECHNOLOGY, U.S. DEPARTMENT OF VETERANS AFFAIRS; LIEUTENANT COMMANDER JAMES LAWRENCE MARTIN, REGIONAL INFORMATION SYSTEMS OFFICER, NAVY MEDICINE EAST, MEDICAL SERVICES CORPS, DEPARTMENT OF THE NAVY, U.S. DEPARTMENT OF DEFENSE; AND COLONEL GREGORY ANDRE MARINKOVICH, M.D., DATA MANAGEMENT PRODUCT LINE FUNCTIONAL MANAGER, CLINICAL INFORMATION TECHNOLOGY PROGRAM OFFICE, MILITARY HEALTH SYSTEM, MEDICAL SERVICE CORPS, DEPARTMENT OF THE ARMY, U.S. DEPARTMENT OF DEFENSE

STATEMENT OF COLONEL KEITH SALZMAN

Colonel SALZMAN. Thank you very much, Mr. Chairman, Congressman Brown-Waite, and the distinguished Members of the Subcommittee, for inviting me to testify.

I am, as said, Colonel Salzman from Madigan Army Medical Center and have the privilege of leading in the newly emerging discipline of informatics.

We have had a long history of command support at Madigan for doing projects that are often funded out of hide. So having the National Defense Authorization (NDA) funds to supplement our efforts has propelled us down the path in sharing information technology.

In the 3 years that we have had to complete the 4-year project, we have delivered all the deliverables that we were chartered to do in our business plan and all of those deliverables are in use in the enterprise system. So it shows the benefit of merging local development with enterprise architecture to deliver rapid turnaround products that can be used in the information systems.

In addition, we have added information requirements to cater to polytrauma information needs as well as additional requests from VA providers and DoD providers as we have prioritized from critical information needs to less critical but important needs.

At the outset of this testimony, I would underscore our assessment that the choice on many levels that we face if it is couched in an either/or strategy is misinformed, but we need to look at both

strategies in approaching the problems that we face starting with having the local and the enterprise teams meet together and work together so that both are working together on the solution and not the local project as an isolated project directing things or an enterprise solution directing things that does not meet local needs.

The initial challenges surrounded learning required to overcome the first either/or proposition of who drove the project, enterprise or the local site. A critical lesson learned was both. The local site had access to the clinical end user community and the requirements necessary to improve the flow of information while the enterprise had ownership of the architecture and systems and which requirements would be built and deployed.

At the outset, it is important to state that while this project is a demonstration project, all of the deliverables are being used by the enterprise systems of both the DoD and VA in production in near real time and that is meaning in seconds, not days, weeks, or months.

The strategy of development based on the priority of information delivery shaped our work and the work cycles for this project were generally in six- to nine-month increments.

The critical dialog between clinical end user and the development team at the local level combined with an active dialog between local and enterprise team members ensured that a principle of software development, namely to correct functional problems as they are identified in the design phase, proceeds iteratively and cost effectively.

The savings can be significant over allowing major design problems to persist into production. This exemplifies another both solution to an either/or proposition.

As far as AHLTA or VistA, there are strengths and weaknesses in both systems. That is another either/or proposition, I think, that is better answered with both.

AHLTA is integrated worldwide and available 24/7. There are functional problems that are being worked on to improve use at the clinical and at the business level.

VistA shows the benefits of local design and its adoption by end users who are more inclined to buy into products they create.

The downside for the VA is the historic lack of configuration management. I use management intentionally as against configuration control. The VA faces big challenges in reorganization and must be careful not to destroy the strategy that delivered its success while addressing its Achilles heel of decentralized, unmanaged growth.

The cost of imposing one system on both organizations now would be prohibitive. Establishing interoperability and designing a strategy of convergence over the next 10 to 20 years will allow both a solution and capitalize on best practices and less disruptive to changes to either system.

These comments summarize what I would offer as a Steering Committee Member engaged in this project from the start.

I would also encourage Congress to continue its support of the VistA program and the agencies involved. Sustaining this and other successful projects will enable the DoD and VA to maintain

forward momentum rather than losing the intellectual capital that brought these results about.

And in addition to General Robb's testimony, I think financial resources to maintain the intellectual momentum we have gained are necessary. And I would say that we need those to continue. Otherwise, we will get this far and then put on hold until another round of money comes through and you have to reassemble a team and start basically, go a few steps backward before you can go forwards again.

I would like to thank the Committee for inviting me to testify and welcome questions.

[The prepared statement of Colonel Salzman appears on p. 65.]

Mr. MITCHELL. Thank you.

Mr. Green, you have 5 minutes.

TESTIMONY OF HOWARD B. GREEN

Mr. GREEN. Thank you, Mr. Chairman. I would like to thank you for the opportunity to testify on sharing of electronic medical information between the Department of Defense and Department of Veterans Affairs, what is being done to accomplish the objectives and the viability of the approach.

I have been a member of the Department of Veterans Affairs Health Information Technology (IT) community for over 19 years, serving in multiple capacities at the local, regional, and national level.

Prior to joining the Office of Information and Technology in 2004, I was the Chief Information Officer (CIO) for the VA Heartland Network, Veterans Integrated Systems Network 15, and was responsible for the introduction of VA's VistA system at all facilities and clinics in the region.

Most recently, as Deputy for Operations Management within the Veterans Health IT portfolio, I participated as a staff member on the President's Commission for America's Returning Wounded Warrior and was co-author of the Information Technology chapter and final report recommendations.

Following that assignment, I have been given the responsibility for coordinating many of the recommendations from the President's Commission report.

Formal activities related to the sharing of clinical information between VA and DoD have been ongoing since 2001. Although there are a number of systems that have been developed to support this function, for all intents and purposes, the overarching goal is the bidirectional exchange of computable information between VA and DoD in real time.

The following are a selection of the systems that are in place to support the exchange of clinical information: Bidirectional Health Information Exchange or BHIE supports the functional interoperability between VA and DoD through the exchange of textual patient health information. Through BHIE, the two departments have transferred information for over 2.3 million unique patients who are active dual consumers. The information is viewable through BHIE. The BHIE interface flows to and from the following systems:

On the VA side, we pull data from 128 VistA systems and the data is viewable through Computerized Patient Record System

(CPRS) and VistA web. On the DoD side, data is pulled from the composite healthcare system, clinical data record, the clinical information system (CIS), and theater medical data store. Data is then viewable through the AHLTA share application.

Currently VA and DoD are bidirectionally sharing viewable information supporting ten categories of clinically relevant data including outpatient pharmacy data and anatomic pathologies, surgical reports, radiology text reports, and discharge summaries from several DoD sites running CIS.

By December 2007, the goal is to expand the amount of clinical data exchange through BHIE to include encounter notes, patient focus problems list, and theater level inpatient and outpatient notes.

By September 2008, VA and DoD improvements will include the addition of a polytrauma marker, an OIF combat veterans identifier, electronic patient handoff indicators, DoD scanning interface, the interagency sharing of essential health images, and much more.

The clinical health data repository or CHDR is the clinical data interface that supports the exchange of standardized and computable data. This data can be used to support the automated clinical decision support tools such as drug/drug and drug/allergy order checking.

Currently data from the CHDR system interface is being used at seven VA and DoD sites. The interface currently supports the movement of pharmacy and medication allergy data and will be upgraded to include chemistries and hematologies in the fourth quarter of fiscal year 2008.

The key distinction between BHIE and CHDR is that the applications leveraging the BHIE interface often require the clinicians to look in several locations to retrieve health record information from other points of care. This often requires the clinician to interpellate based on approximation when comparing data elements due to the different terminologies.

By comparison, clinical information obtained through CHDR can be incorporated into the same clinical view allowing for automated computation and thus allowing the users to readily compare like data.

Collaborations such as the one between the VA Puget Sound Healthcare System and Madigan Army Medical Center focuses on specific functionality and support of limited sharing agreements and are vital partners in the process of demonstrating new capabilities and functions.

By comparison, the Great Lakes Federal Healthcare Center will eventually push the concepts of medical and administrative data sharing to its limits. The goal at the Federal Healthcare Center is to fully integrate the clinical and administrative functions between the two healthcare systems.

Planning activities are underway to develop the local project team to support this activity and, additionally, an enterprise level of team resources is being assembled to resolve technical and operational issues that are beyond the local team's ability to address.

There are certainly advances in the application of information technology that can be applied. However, the process is complex and must be driven by key business decisions and not by IT.

Mr. MITCHELL. Could you——

Mr. GREEN. Mr. Chairman, this——

Mr. MITCHELL. Okay.

Mr. GREEN [continuing]. Does conclude my opening remarks.

[The prepared statement of Mr. Green appears on p. 68.]

Mr. MITCHELL. Thank you.

Lieutenant Commander Martin?

STATEMENT OF LIEUTENANT COMMANDER JAMES LAWRENCE MARTIN

Commander MARTIN. Mr. Chairman and Members of this distinguished Subcommittee, thank you for inviting me to be here today. I am Lieutenant Commander James L. Martin and I serve as the Regional Information Systems Officer, Navy Medicine East.

Thank you for this opportunity to talk about my personal involvement in design and implementation of the composite healthcare system, CHCS2, AHLTA, and the electronic medical record sharing between the Department of Defense and the Department of Veterans Affairs.

The present method of sharing electronic medical information at Naval Health Clinic, Great Lakes is through the Bidirectional Health Information Exchange, BHIE, and the clinical health data repository, CHDR.

The Veterans Affairs' providers are granted read-only access to the Department of Defense composite healthcare system and AHLTA. The Department of Defense providers are granted read and write privileges to the Veterans Affairs' computerized patient record system which resides on the Veterans Health Information System and Technology Architecture, VistA.

Specifically, access to the composite healthcare system, AHLTA, and the computerized patient record system in North Chicago is achieved through a single end user device with icons on the desktop representing each of these applications. This allows for seamless patient flow from the recruit processing center clinic at recruit training center, Great Lakes, to the emergency room and inpatient facility at the North Chicago Veterans Affairs Medical Center.

Laboratory data sharing interoperability, LDSI, is used to share laboratory information between these two systems. The combination of these methods listed above allows complete sharing of all clinical information between the Veterans Affairs and the Department of Defense providers.

My personal involvement in this process dates back to 1992 when I assisted in the design and implementation of the infrastructure and end user device placement and support, a Composite Healthcare System, CHCS Legacy.

While serving as Assistant Department Head in Naval Medical Information Management Center, Bethesda, my involvement included personally visiting each naval healthcare treatment facility prior to and during the system implementation.

Thereafter, my role expanded in 1994 as Head Management Information Department Naval Hospital, Pensacola, where I man-

aged the composite healthcare system host site for the hospital and its remote facilities.

In 1997, while serving as the TRICARE Region 2 Regional Information Systems Officer, Naval Medical Center, Portsmouth, one of our commands was selected to be the test site for the composite healthcare system 2, the predecessor to AHLTA.

From 2000 to 2004, I was the Information Systems Officer at Navy Medical Center, Portsmouth overseeing the test and implementation of the composite healthcare system 2 system, AHLTA.

It was during this tour that Naval Medical Center, Portsmouth first populated the clinical data repository with a 25-month data pool from the CHCS Legacy system, placing demographic information and laboratory, pharmacy, and radiology results in the clinical data repository.

From 2004 until 2006, I served as the Medical Liaison Officer, Space and Naval Warfare System Center, Norfolk, where I was in charge of design and testing of the theater medical information program maritime, TMIPM, the Navy operational version of the composite healthcare system 2 and AHLTA, designated at the time CHCS2 and AHLTA–T.

Currently as the Regional Information Systems Officer for Navy Medicine East, I oversee all the information management and technology for the Navy military healthcare facilities that fall under Navy Medicine East. Naval Healthcare Clinic, Great Lakes is one of these commands.

I have made five site visits in direct support of the DoD/VA initiative at Great Lakes. During these visits, I have surveyed the existing facilities and assisted in the planning and relocation of the Information Management/Information Technology (IM/IT) equipment to its new location at the Federal Healthcare Center.

I attend biweekly conference calls and engineering support meetings where the design and layout of the actual IM/IT spaces is discussed.

The other commands under Navy Medicine East that I am presently assisting with DoD/VA IM/IT initiatives include Naval Health Clinic, Charleston, Naval Hospital, Pensacola, Navy Hospital, Jacksonville, and Naval Medical Center, Portsmouth.

I am also a member of the National Information Management and Technology Task Group for the Department of Defense and Department of Veterans Affairs Electronic Health Information Sharing Initiative.

My responsibility as a member of this task force is to plan and oversee the acquisition and implementation of information systems that integrate VA and DoD healthcare processes at the North Chicago Federal Healthcare Center.

Our goal is to have an interoperable information system that supports clinical and business operations by June 2010. We plan to create a single main computer room and a single main telecommunications room.

Additionally, an information management and information technology network trust between DoD and VA must be established along with domain ownership and single electronic mail system.

We are presently gathering requirements in the functional use so that a determination can be made on whether a combination of the

information systems or a new information system is required to meet the functional user requirements.

The ultimate goal is to have a single point of entry to support the missions of both DoD and VA patient populations. At present, this goal is met by providing access to CHCS, AHLTA, and CPRS using multiple icons on a single end user device.

Mr. MITCHELL. Could you wrap up your testimony, please?

Commander MARTIN. Yes, sir.

In addition to the goal of the single point of entry, we are also working on the consolidation of IM/IT systems of all the functional areas in the Federal Healthcare Center. This involves the management of development of functional requirements, assisting with local site integration efforts, assisting enterprise solutions, and communicating the status.

I would like to conclude by saying that one of our top priorities is to continue finding ways for electronic medical data sharing between DoD and VA.

Mr. Chairman, Committee Members, thank you again for this opportunity to speak about our efforts. At this time, I would be pleased to answer any questions you may have.

[The prepared statement of Commander Martin appears on p. 71.]

Mr. MITCHELL. Thank you.

Colonel Marinkovich, you have 5 minutes.

STATEMENT OF COLONEL GREGORY ANDRE MARINKOVICH

Colonel MARINKOVICH. Mr. Chairman, Members of this distinguished Subcommittee, thank you for inviting me here today. I am Colonel Andre Marinkovich and I serve as the Data Architect in the Clinical Information Technology Program Office, that is CITPO, with the MHS, Military Health System.

Thank you for this opportunity to talk about the military's electronic health record, AHLTA, and the strides we are making in sharing information between the Department of Defense and the Department of Veterans Affairs.

AHLTA is an enterprise-wide medical and dental outpatient clinical information system. It currently is the military's outpatient EHR or electronic health record that generates, stores, and provides secure online access to longitudinal, lifelong patient healthcare records for the more than 9.1 million MHS beneficiaries seen in our military treatment facilities.

AHLTA ensures the continuity of the Department's health information and patient centered healthcare delivery worldwide with accessibility anywhere, any time. Worldwide deployment of AHLTA which began in 2004 was successfully completed in November of 2006. Implementation support activities span 11 time zones and trained over 55,000 users with more than 18,000 healthcare providers.

The current AHLTA functionality includes encounter documentation, orders, results, retrievable coding, and alerts, reminders, role-based security, master patient index, the ability to do ad-hoc queries.

AHLTA use continues to grow at a significant pace. To date, we have had 45 million outpatient encounters recorded. It is growing approximately 120,000 to 112,000 per day, per workday.

DoD and VA are also taking the first steps toward a joint electronic health system. There has recently been a contract to assess the DoD and VA's business and clinical processes, design features, and system constraints relative to the inpatient component of an EHR.

This assessment will determine and describe in narrative and graphic format the scope and elements of the joint inpatient electronic health record and identify those clinical and business capabilities and applications that interact with the joint inpatient electronic health record.

An analysis of alternatives will then be conducted to develop a recommendation for the best technical approach. We will then implement that solution.

Based on feedback from several AHLTA user conferences, we are making significant changes to the next version of AHLTA that will be released in December 2007. Better performance and better user friendliness are a couple of the things that we are going to be providing. There will also be other enhancements with the ability of people to use the system from multiple sites and enable mobile providers to continue to use the system seamlessly.

Looking ahead into 2008, we plan to begin worldwide deployment of dental charting and eyeglass ordering.

I would like to conclude by saying that one of our top priorities is to continue finding ways for AHLTA to seamlessly transfer information between the DoD and the VA, ensuring continuity of quality care for returning wounded warriors.

With your support, we will continue building on our achievements and sharing electronic health information in support of the men and women who serve and have served this country.

Mr. Chairman, Committee Members, thank you again for this opportunity to speak about our efforts. And at this time, I would be pleased to answer any questions you may have.

[The prepared statement of Colonel Marinkovich appears on p. 73.]

Mr. MITCHELL. I want to thank all of you. And I wanted to apologize before the bell rings that we are about to be called for a vote which means we will take a vote and I am not sure how many votes there will be. Okay. So it will be about a half hour in between. But we can get started with some of the questions anyway until the bell rings, but I wanted to apologize. We will take a break and recess and come back.

The last two panels explained the importance and necessity for electronically sharing medical records. You are all on the ground doing it. And the question is for the DoD folks.

In your opinion, what obstacle is most responsible for getting in the way of sharing electronic medical records with the VA? Anyone?

Colonel MARINKOVICH. I think the biggest obstacle has been that the DoD has been working to develop and deploy a system that has only recently been finished. And I think since that time, since basi-

cally December of 2006, we have made really significant strides in terms of being able to share information.

Our systems simply did not have all of the electronic information that we wanted to share and I think now we are beginning to have all that and have those capabilities. So I think once things become electronic, the sharing becomes easier and all the work that we have been doing with BHIE and with CHDR are going to bear fruits.

Mr. MITCHELL. Mr. Green, first of all, do you agree with the assessment of what has been holding us up?

And, secondly, I know the VA has been actively researching and implementing electronic medical records. I am also aware that integrating these systems with DoD records has been challenging.

What is standing in the way of getting all of this medical information into a readable and computable format and how long will that take to do that?

Mr. GREEN. Well, I would certainly agree with the statements of Colonel Marinkovich.

The question is somewhat complex. As far as how long it will take, we do have plans to complete delivery of the medical record through the end of fiscal year 2008. However, and what you have seen is, you know, a slow progression from 2001 forward.

Some of the issues are as Colonel Marinkovich stated, but you also have to understand that the state of the industry is not exactly rushing ahead of us to say this is how we should do it. A lot of the territory that we are stepping into is new ground.

There are no standards in certain spaces that we are working with and we are having to derive those standards in advance of, say, what the national interests may come to conclude.

So there are a lot of technical challenges. I have seen a lot of activity in the past 24 months which is extremely pleasing and great to see. We have a long road to go. and we are working as collaboratively as we have ever worked in the past.

Mr. MITCHELL. Thank you.

And one last question for anyone on the panel. Are there any possible Health Insurance Portability and Accountability Act (HIPAA) restraints or constraints that are standing in the way?

Colonel SALZMAN. Well, I think both agencies probably need to answer independently, but I know on our side, we follow all the HIPAA requirements as everyone should. So I do not think there are constraints. There are simply things we have to do to make sure we cover those bases.

Mr. MITCHELL. And the reason I ask that is because we have heard before that the reason there is no sharing of these records from DoD to VA is because of HIPAA and that it takes a long time. I am just wanting to make sure that, if that is a problem and that has held up any transfer of records that we take care of that as quickly as we can.

Colonel MARINKOVICH. I think you are asking a question that really should not be addressed necessarily to technical people. We all believe, I think, and I think we would all agree that there should be role-based security down to the level of an individual patient.

And so our systems should be able to accommodate whatever HIPAA tells us to do. And I think, historically, we have had some issues with that because we have needed to get that kind of ironed out.

Mr. GREEN. I would agree. Certainly we are progressing very sensitively through this area. As a member of Dole-Shalala Commission, we actually looked into that and did not see any overwhelming HIPAA constraints that would preclude the sharing of data. In fact, there are sharing agreements that support it.

But it is something that we do not take lightly. We do not want to end up in a situation where we are jeopardizing the privacy of either personal health or identifier information.

Mr. MITCHELL. Thank you.

Would you like to ask some before we—as soon as Ms. Brown-Waite gets through, we are going to take our recess and go vote.

Ms. BROWN-WAITE. Just a couple of things. I believe that we have held hearings in the past where it was absolutely clarified that there are no HIPAA problems. So please, gentlemen, do not use that as an excuse. That issue is off the table. There are not any HIPAA problems.

Do you all agree?

Colonel MARINKOVICH. Absolutely, ma'am.

Ms. BROWN-WAITE. I think in the past, it was a great thing to use as an excuse, but it should not be. That show is over.

Let me ask a question. I have been told this and I would like a response. Do the various branches of the military use, for example, the same kind of x-ray, magnetic resonance imaging (MRI) equipment so that it can be even within the branches shared? So if you all use separate systems, is that part of the complicated problem here?

And, you know, there is certainly an ability to save money by bulk purchasing. Why is this not done? I mean, why are all these separate systems out there? And any one of you all can just jump right in here.

Colonel MARINKOVICH. I think that is for me to answer. The MHS, Military Health System, has not had an overarching radiology PACS approach. And so it has been left up to the responsibility of the services and the sites themselves to procure those kinds of systems.

Now, part of the reason for that is that those systems are medical devices and so they fall under a different set of rules and regulations relative to electronic health records.

And so I think you are absolutely correct. If we had enough money to go in and tear out everything we had and put in something new, that would be a positive thing. But because things have been bought over various periods of time, the life cycles are completely out of step.

Ms. BROWN-WAITE. So the health system in DoD has been there for——

Colonel MARINKOVICH. I am talking about PACS, ma'am.

Ms. BROWN-WAITE. I beg your pardon?

Colonel MARINKOVICH. I apologize. I am talking about the radiology systems, what are called picture archiving——

Ms. BROWN-WAITE. Correct. It has been there. This is not new technology, guys. Okay? It is not new. Why not consolidate? Why suddenly say, gee, we have disparate systems?

Colonel MARINKOVICH. I think that is going to have to be something I will have to leave to Mr.——

Ms. BROWN-WAITE. And, you know, this is not something that today we should immediately change. It has been coming. You know that the sharing issue, it is not new. It has been here for a very long time.

And to have even this complicated system, these systems out there that are not even—would it be accurate to say that, you know, every time that it is transferred over to a hospital that there is a problem? Would that be an accurate thing to say if the receiving entity does not have the same ability?

Colonel MARINKOVICH. Well, once again, you are asking a question that is a little bit outside of my expertise. I can tell you that if you are talking about the access to these kinds of radiology images for certain kinds of uses that we are in the process of putting together an integration effort that has made significant strides. We have also worked with the folks down in El Paso who——

Ms. BROWN-WAITE. Colonel, I do not mean to be rude. I really do want to hear your answer. We do have to go to vote.

Colonel MARINKOVICH. Not a problem, ma'am.

Ms. BROWN-WAITE. Mr. Chairman, if I am unable to come back after the vote, I would ask that Art Wu, Minority Subcommittee Counsel, take my place instead.

As you know, Mr. Bilbray is from California and he rightfully went to be home with his constituents during the tragic fires that are taking place.

Mr. MITCHELL. So without objection.

Ms. BROWN-WAITE. Thank you.

Mr. MITCHELL. Thank you.

This hearing is recessed.

[Recess.]

Mr. RODRIGUEZ [presiding]. Thank you very much. I know the Chairman hopefully will be making it pretty soon. Let me once again just thank you not only for your service but for your testimony.

Some of you, I gather, had the opportunity to listen to the testimony of the GAO report. Do you all have any comments in terms of their findings and the problems that were identified from their findings?

Mr. GREEN. Having reviewed those findings in the past and, you know, through many efforts, you know, we have made a lot of progress. I have to agree. And we continue making progress.

Is there a need to focus our energy, create a strategic direction between the two departments that is tangible, that we can build to? I think that is the opportunity that exists.

And that is one of the points that I clearly take away from the GAO report, that a combined plan is necessary that is tangible, sets expectations, objectives, and that we can build to. So I would be remiss if I said I did not agree.

Mr. RODRIGUEZ. But the GAO has indicated that you have not come up with a long-term plan. And I know the military. If they

are good for something, they are really good for planning. I know you have them all over and I am sure you have some on the shelf. So what is the problem?

Mr. GREEN. We have plans to deliver, and I invite my other colleagues here to comment, but we have plans to deliver specific functionality. How that equates into the long-term strategy is somewhat vague.

But we are not doing the wrong things. There is absolutely no question in my mind that the things that we do are the right things. It is just how do they fit into the overall strategy of how VA and DoD need to support our population into the future.

Mr. RODRIGUEZ. Colonel, anyone else?

Colonel MARINKOVICH. Well, I was going to start by just apologizing that I do not have full visibility to be able to answer the question completely. But I know the 2 years that I have spent at CITPO and the Military Health System has demonstrated to me that there is just an increasing commitment to share.

And I know that just in this last year, we have been working to share electronic documents and radiology images for regular providers between the DoD and the VA in a way that, you know, is just very encouraging to me. I spent a lot of time working with the VA people and our DoD colleagues to achieve that. The visibility again is just not——

Mr. RODRIGUEZ. And, by the way, I was glad that Colonel is it Salzman?

Colonel SALZMAN. Salzman.

Mr. RODRIGUEZ [continuing]. That you indicated the need for resources in order to make that happen. Although, as I recall, we have pumped a good amount of—I cannot quote you the amount in the past—whether it has gone for that purpose, I do not know—but we have kicked in some resources in the past.

But you need to let us know the amount of resources that are needed in order to make this happen because I think it can be more cost effective in the long term, not to mention that it would be much better for our soldiers for them to be able to have that folder and make better decisions when it comes to benefits and other types of treatment.

Yes, sir. Go ahead, Colonel.

Colonel SALZMAN. Thanks for that support. The problem is that where the money is allocated makes a difference in what programs get supported and how it goes forward. There are so many requirements out there that are dedicated and focus on one area. To sustain, that requires some intention, you know, from Congress through DoD and VA to the specific projects.

Mr. RODRIGUEZ. And it is my understanding that your program is running out of money. Is it because it was not allocated sufficient resources or what?

Colonel SALZMAN. No, no. It is not that. It is ending as far as fiscally. That is the end of that project. And therein lies the problem that if you identify toward the end of a project something that has been successful, the lag time in getting legislation to support that in the future——

Mr. RODRIGUEZ. That is why the GAO has indicated that you have not come up with a plan, a long-term plan that would go be-

yond a year, 2 years, 3 years, whatever. And that is why that is essential so that those resources can continue to flow.

Colonel SALZMAN. And part of it is the lessons learned that you gain as you go through the process. The feedback loop to Congress to legislate specifically, that lag time does not inform the legislative process, I think.

Mr. RODRIGUEZ. And, Lieutenant Commander Martin, did you want to make any comments on the GAO and the fact that I know you have been engaged for a good 15 years? You know, what has been the problem?

Commander MARTIN. Well, sir, it is my opinion that we do have a schedule. It depends on what we are working specifically on. If you take North Chicago for an example, you know, our timeline is 2010. So we have built a schedule to have your facility operational in 2010 with the systems that the functional users are identifying.

Mr. RODRIGUEZ. Okay. Let me go ahead and get, Mr. Wu, do you have any questions?

Mr. WU. Yes, I do, Mr. Rodriguez. Thank you very much.

Commander Martin, looking at your testimony—and, Mr. Rodriguez and Chairman Mitchell, appreciate the opportunity for the Ranking Member to have the questions asked through her Counsel—you have been working at this since 1992. Can you tell me what the original deployment date was for CHCS1 and 2?

Commander MARTIN. The original deployment date for CHCS1?

Mr. WU. Its implementation.

Commander MARTIN. I do not know that off the top of my head, sir. I know what my schedule was in the Navy and we had CHCS1 implemented on the Navy side on schedule. I mean, we followed it. I did that for 24 months between 1992 and 1994.

Mr. WU. Don't you think the original, or maybe someone else out there may know, don't you think that implementation date was supposed to have been probably a decade ago? Anyone?

Colonel MARINKOVICH. I think the answer to that question may be able to come more easily from the next panel. But are you asking CHS1, sir, or CHS2?

Mr. WU. When do you think CHS1 started?

Colonel MARINKOVICH. I know when I was in Tripler, it was one of the beta sites and that was 1989.

Mr. WU. Right. It originally started in 1987. We are in 2007. We are talking about 2010. And VA has got to follow the lead of DoD in order to get that integrated system, correct?

Mr. GREEN. Sir, if you are asking that VA has plans to create an integrated system that go out several years, I think the current year target is 2014 or so and that we have been in the process of doing this for several years. That is correct.

Mr. WU. All right. Commander Martin, I have another question for you if you do not mind. You stated in your testimony that your mutual goals with VA is to have an interoperable information system that supports joint clinical and business operations at the joint venture at Great Lakes Naval Training Center in North Chicago by June 2010.

And I think we all look forward to that happening. I think that will be the model on a lot of the governance issues between VA and

DoD that can be ironed out, at least at that test site, maybe not uniquely, geographically unique to that.

My question to you is, right now does DoD trust VA's IT security measures?

Commander MARTIN. In my opinion, sir, they trust them. The issue is whether or not the VA is recognized as a trusted agent with DoD which is separate.

Mr. WU. Okay. Are they a trusted agent?

Commander MARTIN. As of today, sir, in my opinion, no.

Mr. WU. And I also understand the DoD's distrust of VA's IT issues and vulnerabilities has resulted in DoD placing its own servers in VA's four polytrauma centers. Is this true?

Commander MARTIN. I am not an expert in that area, sir. I could not answer that one.

Mr. WU. Mr. Green?

Mr. GREEN. I am not an expert either. There may be somebody in the panel behind me that can address that.

Mr. WU. So you are punting?

Mr. GREEN. I am punting, yes, sir.

Mr. WU. Let us say that it is true. What does that indicate to you?

Mr. GREEN. The placement of servers in the VA application in order to support or VA environment in order to support DoD applications, it would indicate that we are adding layers of complexity in order to achieve the end goal.

Mr. WU. Okay. A question collectively for the panel, not to put any of you on the spot. This whole issue of interoperability exchange and timely exchange of information, do you think this is a technological barrier that is taking this 20-year tango down this path or is there a cultural will issue?

Colonel MARINKOVICH. I would have to say from my vantage point, it is a little bit of a combination of both because the question is what data do you want to share. And if the answer is, well, what you put in CHCS, then I agree completely. It should not have taken us 20 years to share what is in CHCS with what is in VistA, basically being very similar systems.

But if you are talking about the rest of the EHR, I think that has only begun in the last 5 or 6 years to be truly an industry in itself and I think we are pretty close to being able to deploy that kind of capability between the two agencies or the readability, the readable electronic health record.

Mr. WU. Anyone else? Colonel Salzman.

Colonel SALZMAN. Yes, sir. As far as interoperability, and I did not get to those comments in my testimony, but I think that that is where we are now capable of doing that technologically.

But if you look at the private healthcare sector, they are facing the same problem. And I think by breaking ground, the DoD and VA are leading in the efforts to demonstrate interoperability and that the private sector will follow that path as we extend it into Regional Health Information Organizations (RHIOs) and into the national health information network. So I do not see us in looking at private healthcare sector as being behind. I think we are in the lead. And that——

Mr. WU. I do not think there is an argument there even though I have seen a couple meltdowns on the RHIO attempts.

Colonel SALZMAN. Right.

Mr. WU. Is that not correct? San Diego melted. I mean, as the private sector, public sector initiatives and DoD and VA are leading the way.

I am just asking after 15, 20, however many years you want to call it, the GAO says a decade, we say two decades, some say 25 years, is why have we not moved, or as the opening statement of Ms. Brown-Waite is we have seen probably more movement and in Chairman Mitchell's statement as citing more movement in the last 24 to 18 months than we have in the last 20 years? What do you attribute that to?

Mr. GREEN. Well, the standards are being developed kind of by Health Level 7 and different organizations, so there is, I think somebody mentioned it before, we are kind of charting uncharted territory, and so there is a learning curve that has to happen in doing that.

Colonel MARINKOVICH. I would say, too, I mean, from my vantage point, it is because we are being pushed to do that. I mean, I appreciate visionary leaders like General Dunn, who used to lead us at Madigan, who would set the bar way out in front and say make it happen. And I think it is leadership that makes these things happen. So we appreciate it.

Commander MARTIN. Yes, sir. I have to agree. I think in my opinion, anything is technically possible. Now it is defining, meeting the mission of the VA and meeting the mission of DoD and deciding what are those data fields and elements that we absolutely have to share and now we are finally at the point where those are being defined by the functional providers. And once we have that information, the technology will follow, giving them the information they need as the functional experts.

Mr. WU. Thank you. And I appreciate the latitude that the Chair has offered us.

And piggybacking on Ms. Brown-Waite's questioning of you, Colonel Marinkovich, you know, talking about the PACS system, talking about the multiple MRI, ophthalmoradiography capabilities we have within the services and even within the VA, multiple, multiple systems that do not communicate with each other, what would be your reaction, and I am not asking you to speak for the Department, about an interoperable clause in the procurement of major medical IT or medical devices with an IT component of both DoD and VA purchases where there is a standard utilized where there has to be a sign-off that there is an interoperability issue or possibility that that is addressed during the procurement phase?

Colonel MARINKOVICH. I am strongly in favor of such a thing. I have to tell you. I devoted much of the last maybe 6 or 7 years to standards organizations and the reason we do not follow standards is we do not have discipline. I mean, that is what you need to have to follow standards.

But I think that is only part of it. Once we have done that, we then still need to have an overarching governance and an overarching management structure to make the systems that could talk

to each other actually connect. So I agree with you. You are absolutely——

Mr. WU. I appreciate that.

Your indulgence one more time, Mr. Rodriguez. I have a question for this panel and the next panel is an issue that you see in the press quite a bit now as we talk about our wounded warriors come back from OIF and OEF is TBI, mental health component, PTSD, and how they are related perhaps sometimes, many times.

What are we doing about capturing that information and sharing that information? I do not see any of that in anyone's testimony, in any of the briefings we have had on what we are doing as these soldiers and servicemembers transition to the VA.

How do they get treated if there is no PTSD record or record of medical annotation or any other mental health issue or what you need to capture on the requirements under TBI if you are going to screen? How is the VA going to do that or how does VA work a compensation and pension claim for those diagnoses if that information is not being transferred in some format? I am not even talking electronically to the VA. How does the VA do their job if they do not get the information?

I know that mental health records are held separately. I used to be in the Army, an inpatient admin, and those mental health records are kept separately or retired separately. I do not see where they are merged. So if they are not merged, where do they go to and how does VA get access to them?

Colonel SALZMAN. If I could answer from how we do that locally and we are trying to design a model for expanding to the enterprises, which we always keep in sight, we have a swap process. I do not know if you were able to see that when you were out there, but that interview process captures all the survey information.

Mr. WU. Actually, we did see that, Colonel Salzman. Is that Madigan specific?

Colonel SALZMAN. Yes, sir. And that——

Mr. WU. And what about the other 65 facilities?

Colonel SALZMAN. Well, the DoD is looking at that. What happened was there was a mandate to come up with a solution but no overarching process to do that. And so of necessity, which is what usually happens, and particularly with TBI, you have a new requirement and you have to address it. And there is not an enterprise process that addresses it effectively to deliver a solution that handles the soldier in front of you.

Mr. WU. It was pretty impressive what you did at Madigan on that issue, but what you are saying, I do not know, Mr. Rodriguez, is if you have PTSD or TBI, then we should send you to Madigan then because no other place can screen you well?

Colonel SALZMAN. Well, the benefit of doing it there is that you can develop a model, test it, see how it works, and then you can share it enterprise-wide. And so the TBI question is not a simple question. It is complicated for the neuropsychologist to answer.

So thinking that we can diagnose and have a treatment plan that is cookie cutter and you can spread across the enterprise at this point, I think, oversimplifies the problem. And so what we are doing is going through the steps to validate like the screening proc-

ess. If you take the two screening questions that were supposed to be put into the post-deployment interview——

Mr. WU. Right. Are there any other military treatment facilities (MTFs) that are doing this or just——

Colonel SALZMAN. Yes, sir.

Mr. WU [continuing]. Madigan?

Colonel SALZMAN. No. There are other MTFs.

Mr. WU. How many?

Colonel SALZMAN. Colorado kind of had the lead because they had done it before we did it and they used the Air Force Academy, the psychiatrists there as their referral. So they had one provider to refer to.

But the problem is if your filter is too open, you would get 80 percent of people coming through. If you refine that filter with background questions, you can cut it down to 16 to 20 percent which we did in our pilot program. So——

Mr. WU. I appreciate that. We are looking to see exactly what the requirement is and how you implement that or address that enterprise-wide though.

Thank you very much, Mr. Rodriguez.

Mr. RODRIGUEZ. Okay. Thank you very much.

And let me, one quick question or maybe two, yes or no on the part of each of you.

In your opinion, could the Department of Defense and the VA start to share all the noncomputable data that exists right now on our soldiers' healthcare and pull that off within 12 months? Yes or no? All the data that is not in the computers, paperwork, information.

Colonel MARINKOVICH. Yes.

Mr. RODRIGUEZ. Okay.

Colonel MARINKOVICH. It is currently in our EHR systems, yes.

Mr. RODRIGUEZ. Within 12 months, you say yes. Thank you.

Mr. GREEN. The electronic data, the plans are to share that, yes.

Mr. RODRIGUEZ. Within 12 months, you think you can pull it off?

Mr. GREEN. That is the plan, yes.

Commander MARTIN. In my opinion, yes, sir.

Mr. RODRIGUEZ. The question is, can you do it, can you pull it off within 12 months?

Mr. GREEN. Yes.

Commander MARTIN. In my opinion, yes, sir.

Colonel SALZMAN. I will agree, yes, sir.

Mr. RODRIGUEZ. Okay. We will probably have a hearing in 12 months and see where we are at, in 6 months.

Let me ask you one additional. And, Colonel Marinkovich——

Colonel MARINKOVICH. Marinkovich, yes, sir.

Mr. RODRIGUEZ. Yeah. Sorry about pronunciation. You indicated that leadership was one of the obstacles in putting the document files and the imaging and the progress or the lack of progress in development of the Department of Defense electronic medical record systems and being able to get that through.

Any other obstacles there besides leadership?

Colonel MARINKOVICH. If I could be so bold as to correct a little bit. What I said was that leadership is what makes us move forward. And I do not think it is an obstacle. It is just a requirement.

You cannot work in an organization like ours or the VA, I would think, without the leaders agreeing and the leaders having a vision.

And I think the point I was trying to make is that over the last maybe 3 years, I have just seen an enormous amount of leadership and vision from the leaders that I have had to work for. And I think that is why we have made a lot of progress to this point.

Mr. RODRIGUEZ. Is it safe to say it just has not been a priority on the part of the Defense, DoD?

Colonel MARINKOVICH. If you are asking prior to that, sir, I just cannot answer. It is outside of my experience. But I know now the people that I work with within my experience, there is no doubt it is the highest priority.

Mr. RODRIGUEZ. Any of you want to comment? Have you all seen the reports of the GAO on your lack of performance in that area? Have you all seen it? Say yes or no.

Colonel MARINKOVICH. Yes, I have seen it, sir.

Colonel SALZMAN. Yes.

Mr. GREEN. Yes.

Commander MARTIN. Yes, sir.

Mr. RODRIGUEZ. So all of you have seen that lack of performance in that area? Okay. And so we are saying that within 12 months, we can try to pull off some major things and that you are going to let us know if you need additional resources.

Colonel SALZMAN. Yes, sir.

Colonel MARINKOVICH. Yes, sir.

Commander MARTIN. Yes, sir.

Mr. GREEN. Yes.

Mr. RODRIGUEZ. Mr. Wu, any last questions?

Mr. WU. No, sir.

Mr. RODRIGUEZ. Thank you very much. Thank you for being here. Thank you.

Let me welcome panel four to the witness table. Dr. Gerald Cross is the Principal Deputy Under Secretary for Health at the Department of Veterans Affairs. Dr. Stephen Jones is the Principal Deputy Assistant Secretary of Defense for Health Affairs at the Department of Defense.

Gentlemen, we welcome you for your insight and I would ask for each of you to introduce yourselves when you make your comments. I want to recognize Dr. Cross.

STATEMENTS OF GERALD M. CROSS, M.D., FAAFP, PRINCIPAL DEPUTY UNDER SECRETARY FOR HEALTH, VETERANS HEALTH ADMINISTRATION, U.S. DEPARTMENT OF VETERANS AFFAIRS; ACCOMPANIED BY PAUL TIBBITS, M.D., DEPUTY CHIEF INFORMATION OFFICER, OFFICE OF ENTERPRISE DEVELOPMENT, OFFICE OF INFORMATION AND TECHNOLOGY, U.S. DEPARTMENT OF VETERANS AFFAIRS, AND CLIFF FREEMAN, DIRECTOR, VA/DOD INTERAGENCY PROGRAMS, VETERANS HEALTH ADMINISTRATION, U.S. DEPARTMENT OF VETERANS AFFAIRS; AND STEPHEN L. JONES, DHA, PRINCIPAL DEPUTY ASSISTANT SECRETARY OF DEFENSE (HEALTH AFFAIRS) U.S. DEPARTMENT OF DEFENSE; ACCOMPANIED BY CHARLES CAMPBELL, ACTING CHIEF INFORMATION OFFICER, TRICARE MANAGEMENT ACTIVITY, U.S. DEPARTMENT OF DEFENSE, AND DAVID GILBERTSON, PROGRAM MANAGER, CLINICAL INFORMATION TECHNOLOGY PROGRAM OFFICE, U.S. DEPARTMENT OF DEFENSE

STATEMENT OF GERALD M. CROSS, M.D., FAAFP

Dr. CROSS. Sir, I am pleased to be here today.

And I wanted to point out that we have given you some handouts. We have two that we provided to the Members and I believe we have a poster for the audience over here behind us that reflects our timelines.

Good morning, Mr. Chairman and Members of the Subcommittee. Accompanying me are Dr. Paul Tibbits to my right, Mr. Cliff Freeman farther to the right.

VA is working with DoD to move efficiently to exchange medical information to better serve our clinicians caring for servicemembers and veterans. And although we have recently made significant progress in sharing health data, we realize that we still have more work to do together.

Today my comments will focus on five components of data exchange, video teleconferencing, scanned information, bidirectional exchange of text, and the exchange of computable data, and case tracking using a veterans tracking application called VTA.

First, my staff report that video teleconferences for physicians and nurses at VA polytrauma centers with their colleagues at Walter Reed and periodically those at Bethesda are very effective, offering a format where the clinicians can directly exchange information and ask questions. These conferences also enhance collaborative relationships.

VA level one polytrauma centers now receive digital radiographic images and scanned inpatient information for all patients transferred from several military treatment facilities. These facilities include Walter Reed and Bethesda. The inpatient information arrives at our polytrauma centers level one in the form of nonsearchable PDF files.

The bidirectional health information exchange supports the real-time bidirectional exchange of current medical——

[Bells ring for votes in the House.]

Mr. RODRIGUEZ. It reminds you that you still might be in school.

Dr. CROSS. Yes, sir. It is interesting to compete with that.

The Bidirectional Health Information Exchange supports the real-time bidirectional exchange of current medical data in the form of noncomputable text between VA and DoD treatment facilities for all of our shared patients. These data include, here is what it includes, discharge summaries, emergency room reports, theater data, inpatient and outpatient laboratory data, pharmacy data, radiological text reports.

In addition, BHIE functionality is being expanded, and here is a key point, to facilitate the sharing of additional key data to include clinical encounter notes, problem list, and vital signs.

In 2008, we plan to have more viewable data. Viewable data will include vital signs, scanned documents, and family and social history reports.

The interface between the DoD clinical data repository and VA health data repository known as CHDR permits us to share computable allergy and pharmacy data between the departments.

By computable, we mean these data augment automatic decision support capability so that VA and DoD providers treating the same patients see automatic alerts when a prescription order would result in adverse drug or allergy interaction.

This interface is being used by DoD and VA providers at seven locations where large populations of patients receive care from both VA and DoD healthcare systems.

The work to make data computable between two different healthcare systems is very complex and requires complete standardization of data. VA and DoD with the U.S. Department of Health and Human Services and others are leading the national effort to identify standards that are robust and mature enough to support full interoperability between computer systems. This work is also dependent upon the prioritization of these data by our clinical communities within VA and DoD and the ability of each department to get these data into our data repositories in a standardized format.

Despite these complexities, the IT staff has informed me that jointly we are doing the work to begin sharing laboratory data in computable format by the end of 2008. Beyond laboratory, we are analyzing the feasibility of sharing vital signs, orders, radiology reports, encounters, immunizations, and problem list in computable format. The order in which these domains are standardized and shared in computable format will be prioritized by both VA and DoD clinicians.

As you aware, sharing inpatient data is a particular challenge since most of the historical data is not in computable standardized electronic format. VA and DoD now have a study underway that will address sharing inpatient data. VA and DoD have agreed that any joint inpatient record will utilize the look and feel of VA's award-winning VistA records as a benchmark or target system.

I want to emphasize that in my view, it is important to build on VA's electronic health record that has clinical functionality, highly praised by doctors and nurses, and is credited with helping VA achieve national benchmarks for quality as well as national award recognition.

VA has achieved the ability to assess patient tracking data enterprise-wide using Veterans Tracking Application. VTA is a modified

version of DoD's Joint Patient Tracking Application. Our case managers can now access VTA to assist with tracking patients treated at both VHA and DoD facilities. VTA is compatible with DoD's JPTA allowing overnight electronic transfer of clinical data on medically evacuated patients.

Finally, our departments are collaborating in the development of an information interoperability plan. The IT staff expect this to be drafted as early as 2008 and proceed toward the concurrence and clearance for a final plan later in 2008. This plan will be recommended to the deputy secretaries of both departments and subsequently overseen by the Joint Executive Council (JEC), Health Executive Council (HEC), and the Benefits Executive Council (BEC).

This plan will serve as the strategic organizing framework for current and future work to set the scope and milestones necessary to measure progress toward the intermediate goals and an end state needed to continuously improve service to veterans and members of the Armed Forces.

Sir, my colleagues and I stand ready to answer your questions.

[The prepared statement of Dr. Cross appears on p. 74.]

Mr. RODRIGUEZ. Dr. Jones?

STATEMENT OF STEPHEN L. JONES, DHA

Dr. JONES. Thank you, Mr. Chairman.

It is a pleasure to be here and I would like to go on record and join your comments and that of the Chairman as to thanking those great men and women who serve in the Military Health System and serve our folks in harm's way and also for the veterans healthcare workers that do such a great job in treating wounded warriors. So thank you, sir.

Joining me today is Chuck Campbell, the MHS CIO, and Colonel Gilbertson, who is a technical individual, particularly in theater programs.

Thank you for inviting me to update you on activities to improve sharing of electronic health information between the Department of Defense and Department of Veterans Affairs.

Since I last spoke to you in May of this year, we have made substantial progress in sharing information and it is gratifying to know that even the GAO recognize that progress is being made. Yet, we know that much work lies ahead.

Today across town, our military medical leaders are meeting with former Senator Dole, with each other, and with VA participation to help move organizations to the next level of service coordination and systems integration on behalf of our veterans, particularly our wounded warriors returning from Iraq and Afghanistan.

We know we need to cut through the bureaucratic barriers and that has become quite evident to all of us in this room. Today I will let you know about the aggressive actions underway to do exactly that.

DoD recently directed a significant change. As you have heard, as of October 6, VA providers now can access theater clinical data for patients who transfer to the VA for care or evaluation. The theater clinical data includes inpatient notes and outpatient encounters, as well as pharmacy, laboratory, radiology, and other impor-

tant clinical information. This means that VA doctors are able to see clinical information on and better prepare for treating severely injured patients before they arrive in VA facilities.

We have also taken steps to better integrate and understand our two cultures. In addition to sharing information, we are sharing people.

Just a few weeks ago, we exchanged our most senior Information Technical Officer. Chuck Hume, our former Deputy CIO for the Military Health System, moved over to the VA. And Chuck Campbell, the former Deputy CIO for Health for the Veterans Health Administration, joined us as our new Chief Information Officer.

This exchange is about more than two people. It signals a new level of trust, respect, and commitment for change that is evident in DoD and VA staff alike and provides an intensified focus on improving our service to wounded warriors.

Here are the major points of progress we have achieved or will achieve this year. One, continuity of care. For patients treated at both VA and DoD facilities, providers can view electronic health data from both departments.

By the end of 2007 calendar year, all essential health data will be, in the words of the President's Commission on Care for America's Returning Wounded Warriors, "Immediately viewable by any clinician, allied health professional, or program administrator who needs that at a VA or DoD facility."

Two, continuity of care for polytrauma patients. In response to the urgent need for VA providers at polytrauma centers to have as much information as possible on inpatients transferring for their care, DoD began sending electronic health information such as——

Mr. RODRIGUEZ. Dr. Jones, I apologize. I have less than 4 minutes to go vote. Let me recess and I will be right back.

Dr. JONES. All right, sir. Thank you, sir.

Mr. RODRIGUEZ. Thank you. I apologize.

[Recess.]

Mr. RODRIGUEZ. Would you like to continue with your testimony? Do you want to continue with your testimony?

Dr. JONES. Thank you, sir. And thank you for your quickness in getting over and getting back.

Mr. RODRIGUEZ. There were two votes.

Dr. JONES. Sir, we were talking about the polytrauma centers and I would just like to echo Dr. Cross' comments.

Having visited each of the polytrauma centers, it has been operational and working well. And one of the reasons is because they do include VTC conferences between the sending and receiving hospitals which enhance communication between the caregivers and the family members and patients.

Three, medical services coordination. DoD and VA have extended the sharing concept to include coordination of our other medical services. For example, when a DoD and VA medical facility does not have the equipment or personnel needed to process certain types of lab tests, DoD can send the test to a VA lab for processing or VA can send the test to a DoD lab. The end result is expedited testing and results shared electronically enhancing the quality of care for our patients.

Four, a joint inpatient electronic health record. Since our announcement in March to assess the feasibility of DoD and VA developing a joint electronic inpatient health record, we have awarded a joint contract to conduct a study and we will see those findings in the next several months.

We know that DoD medical staff require a flexible, mobile, and highly scalable electronic information system in the combat theater that we describe as one system in garrison and one in theater.

We will also ensure our unique theater medical systems work with the VA to support continuity of care for our veterans. It is the agency's goal to take the best from the DoD and VA systems in designing this joint inpatient system.

Five, joint governance. VA and DoD electronic health information collaboration is a major component of the Department's joint strategic plan. The Under Secretary of Defense for Personnel and Readiness and the VA Deputy Secretary, Co-Chair the Joint Executive Council. Supporting the JEC is the Health Executive Council Co-Chaired by the Assistant Secretary for Defense of Health Affairs and the VA Under Secretary for Health.

In addition, the Chief Information Officers of the Military Health System and the VHA Co-Chair the Health Executive Council's Information Management/Information Technology Work Group.

Through these joint governance efforts, an unprecedented degree of collaboration between VA and DoD is occurring. We understand each other's mission and we are ensuring change occurs at the right levels.

Six, standards adoption. According to many experts, together DoD and VA lead the Nation in health information technology, implementation of interoperable standards, and electronic health information sharing.

The Certification Commission of the Healthcare Information Technology, an independent, nonprofit organization, that serves as the Department of Health and Human Services certification entity for electronic health records systems recently certified AHLTA, our electronic health system, assuring our users, partners and patients that our information system meets all basic criteria for functionality, interoperability, and security.

In conclusion, as always, we appreciate the insights and recommendations and guidance of this Committee. We are all working toward the same end, to provide the highest quality care for our Nation's heroes, past and present. And we recognize that we need to work together to achieve our goals as efficiently and effectively as possible.

Thank you for allowing me the opportunity to appear before you and to testify about DoD/VA electronic health information sharing achievements, goals, and plans. Thank you.

[The prepared statement of Dr. Jones appears on p. 79.]

Mr. RODRIGUEZ. Thank you, Dr. Jones.

And both, Dr. Jones and Dr. Cross, do you want any of the individuals that are with you to make any comments or testimony?

Dr. JONES. No, sir.

Dr. CROSS. No, sir.

Mr. RODRIGUEZ. Okay. Thank you.

Good to see, David, Colonel Gilbertson. I know that we have a good friend in common back in San Antonio, so good seeing you. Okay? And thank you for being here with us.

And all of you, thank you for your service and what you have done for us.

Let me quickly ask: The Chairman of the Committee, full Committee and the Ranking Member also of the full Committee requested that I ask you this question and it is in reference to, I think, Lieutenant Colonel Mike Fravell that we ask to stay in Washington and remain engaged in the development of the JPTA and VTA.

And it is our understanding that the VA wants Mr. Fravell to continue to consult on the VTA, but that he has been shut out of the future efforts with JPTA. And the question would be that some of us felt that, in fact the Chairman and others, that would not be advantageous to keeping him managing the program since he contributed to much of the success. Do you want to comment on that?

Dr. JONES. Sir, the individual you speak of did a great job in helping develop JPTA. But as you know, decisions as to assignments are made by the services. So I will be glad to get back on the record to you and pass your question to the service if that is appropriate, sir.

[The following was subsequently received:]

> Lieutenant Colonel (LTC) Michael Fravell will remain assigned in Washington in a position where he can make an impact to the information technology enterprise as the Director of Engineering for AHLTA. In his role, he is not only assisting with Joint Patient Tracking Application (JPTA), but he is contributing to the entire Department of Defense (DoD) electronic health record. Since the Assistant Secretary for Health Affairs oversees the DoD component of the joint venture with the Department of Veterans Affairs (VA), LTC Fravell is involved in projects with the VA. LTC Fravell has also been made available to the VA as a consultant on the Veterans Tracking Application, and he is involved with developing additional functionality in the JPTA.

Mr. RODRIGUEZ. Okay. And then let me also, Dr. Jones, compared to other Department of Defense and VA applications, the JPTA and VTA are relatively inexpensive, almost no new development has been done since the JPTA, in the 18 months, even though the user community is asking for new functionalities.

So why hasn't the Department of Defense medical health systems embraced this technology and expanded its capabilities?

Dr. JONES. Let me ask Colonel Gilbertson if he would address that question, please.

Colonel GILBERTSON. Sir, on the development of JPTA, the continued efforts from theater in terms of growing the JPTA application are indeed continuing. JPTA is part of the DoD family of systems or is now part of the enterprise solution.

In fact, we are now building out the functionality of JPTA so that all of the information that is in JPTA becomes part of the medical record. That was the primary challenge with JPTA is it was its own system, a separate stovepipe system. So that information never made it into that longitudinal health record.

So by keeping the functionality of JPTA is really what the providers wanted and making it part of the enterprise system, we are now able to make sure that all of that information is captured in

the electronic health record so that it can be shared to all DoD and VA providers. So that is really where our effort is at.

So we are definitely still developing against JPTA, the current application, and we are trying to enhance it based on the feedback that we got from Landstuhl and other providers. We were just out there last week and we are very much engaged with the actual users to make sure that what we are building continues to meet their needs.

Mr. RODRIGUEZ. Thank you.

Mr. Wu?

Mr. WU. Thank you, Mr. Rodriguez.

Dr. Jones, piggybacking on Mr. Rodriguez's question here on Lieutenant Colonel Fravell, and not to beat a dead horse to death here, is if my memory serves me correctly, I have a copy of a letter from Dr. Kussman, our now Under Secretary of Health, and Admiral Cooper, our Under Secretary of Benefits, letter that went to DoD asking for an extension on Lieutenant Colonel Fravell.

And there is a subsequent letter signed by Chairman Filner and Mr. Buyer to then acting Secretary Garens saying that they would like an extension of Lieutenant Colonel Fravell, I am not sure if we ever got a response to that or not, to continue the work of JPTA and VTA.

I do not know if you would like to comment on that at all.

Colonel GILBERTSON. As I was saying, the JPTA is part of our enterprise solution. And as you know, AHLTA ultimately, because AHLTA is going to collect the whole patient record, is a critical part of what we are doing throughout the entire MHS.

Lieutenant Colonel Mike Fravell is assigned in a position where he can make the greatest impact to the enterprise over the long run as the Director of Engineering for AHLTA. So in his role, he is not only affecting the future evolution of JPTA, he is now affecting the entire product, the entire DoD electronic health record.

And because we also oversee the DoD component of the joint venture with the VA, the DoD/VA sharing, he is intimately involved in all sharing information projects with the VA to include VTA.

And I have made him available to the VA as a consultant on future developments of the Veterans Tracking Application and he is intimately involved with the developer of the additional functionality in JPTA which is Colonel Hines, who is also in this room.

So in his current role, he is positioned to go beyond what he has been able to do before and actually make a huge impact on the entire DoD and the entire VA as the Director of Engineering for our electronic health record.

Mr. WU. Is he working on VTA, JPTA interface right now?

Colonel GILBERTSON. Yes, he is. Well, he is working as a consultant. The VA has their own program office and their own way of developing. And he is intimately involved in identifying the requirements for not only VTA, but also he was with us last week when we went to Landstuhl and he helped understand what our future is for JPTA and its integration into AHLTA.

Mr. WU. Well, maybe you can shed some light. We have been looking at this issue for some time, especially when it came to light, and there was a Washington Post article where JPTA was

abruptly cut off from the polytrauma center in Richmond while the doctor was on—I think that has been resolved. I think they all said it was a security issue. It was just shut off in the middle of a program.

JPTA, actually I saw JPTA being demonstrated by Colonel Dr. Rhonda Cornum probably 2 years ago at a conference. She was at a Commanders' conference. Said you want to see medical information being transferred, I will show you. It is not a medical record, but it is a tracking application, but essential medical information tracked on that is attached to it as a PDF.

Now, Dr. Jones, AHLTA, AHLTA–T, this year, how much has DoD TRICARE Management Activity going to spend on AHLTA and the deployment? Three hundred million dollars plus, I think; is it not?

Dr. JONES. The program manager should have it.

Mr. WU. The program manager should have it right down to the penny, right?

Colonel GILBERTSON. The life cycle cost for AHLTA right now is at $5 billion, but that also is going to include the inpatient and the ancillary replacements for the Legacy. So to date, we have spent just over $1 billion on AHLTA and the sustainment of CHCS which is now part of AHLTA.

Mr. WU. CHCS1, 2, AHLTA, AHLTA–T, the rebranding. Is there any difference between AHLTA and CHCS2?

Colonel GILBERTSON. Yes. They are totally different applications. AHLTA is an enhancement upon CHCS. So it sits on top of CHCS. It does not survive without CHCS. So the Legacy CHCS is part of AHLTA. You cannot have one without the other.

Mr. WU. Okay. Then someone needs to correct what we were hearing as that there is no difference. It is just a rebranding.

Colonel GILBERTSON. No. There is a significant difference. What AHLTA does is it now documents the clinical encounter. CHCS was primarily an ancillary system that supported our labs, pharmacy, radiology, admissions, discharge, transfers, billing. Now we have a tool that took it from 101 different locations and brought all that data together and made it semantically interoperable across the entire enterprise.

It used to be when I moved from one station, when I left San Antonio and went to Hawaii, I had a blank record in Hawaii. There was no electronic information available in Hawaii because all of our systems were disconnected. AHLTA brought those all together. So now when I moved here from San Antonio, my entire medical record moved with me. And that is what AHLTA did.

Mr. WU. All right. Would you describe AHLTA as in Dr. Jones' words, to track healthcare most effectively in theater, a flexible, mobile, and highly scalable electronic information system is necessary? Does that describe AHLTA?

Colonel GILBERTSON. Can you repeat the question, sir?

Mr. WU. I am taking the text right out of Dr. Jones' testimony. I am just asking if that is AHLTA where he says to track healthcare most effectively in theater, a flexible, mobile, and highly scalable electronic information system is necessary? Is that AHLTA?

Colonel GILBERTSON. I think today that it is becoming more AHLTA than it was 2 years ago. AHLTA was——

Mr. WU. Does JPTA do that?

Colonel GILBERTSON. Say again, sir.

Mr. WU. Does the medical attachments, the PDFs to JPTA, would that describe Dr. Jones' statement there?

Colonel GILBERTSON. JPTA, if you have the infrastructure. When JPTA was implemented in theater, the theater had matured to a point where they had the bandwidth and it provided a connectivity all the way back to the United States.

What Dr. Jones was talking about is a system that can work on a ship, it can work on initial deployments when you have no communications, and it can work far forward on the battlefield in the hands of a medic. JPTA is not that system. AHLTA is that system.

Mr. WU. If we had the Channing Moss issue today with the surgical team forward Afghanistan and Dr. Oh, that information and what was captured there, could that be captured under AHLTA today? Since it came under JPTA, I am just wondering what the evolution is here.

Colonel GILBERTSON. Today without JPTA, that information can be captured. It would be captured through the current TMIP suite and the radiology images would be captured and moved as they are today from a PACS server in theater, that is called Med Web, to Landstuhl. So, yes, today without JPTA, all that information could have been captured and moved. At the time, the answer is no.

Mr. WU. Okay. Thank you very much.

Now, under the current system that you are describing, if a Channing Moss situation happened again today, are you saying that Landstuhl's accepting physician as that patient is arriving from the mobile air staging facility out of theater would have all that information that you just described?

Colonel GILBERTSON. If the systems were used as designed, in other words, if the system that was used to enter that information was the AHLTA solution in theater, that information would have been available to the Landstuhl provider today.

Mr. WU. If that situation happened today, would the current system be able to capture that information as depicted in that video clip?

Colonel GILBERTSON. The current systems in place would capture that information and move it back.

Mr. WU. Thank you.

I think we heard you talk about taking JPTA data and populating AHLTA. Are we saying, and I think that Ms. Embry may have said this to Mr. Buyer last year, is that there is no further money and further development of any other applications under JPTA? Is that true or false?

Colonel GILBERTSON. That is not true. We just invested in JPTA integration into the electronic health record. So——

Mr. WU. I understand that. But besides the integration effort, any other applications?

Colonel GILBERTSON. Additional dollars specifically to JPTA?

Mr. WU. Right. Correct.

Colonel GILBERTSON. Well, once it is part of the enterprise, the dollars that are spent on JPTA modifications will come out as

modifications to the DoD TMIP suite. So there could be depending on the requirement. And JPTA brings functionality that will be used and if that functionality needs to be expanded, then investment will be made in that functionality. So——

Mr. WU. To the best of your knowledge, there is no new money earmarked to new JPTA applications as of today, is there?

Colonel GILBERTSON. Well, JPTA will cease to be its own application. So as we invest in AHLTA and AHLTA–T, we will invest in enhancing JPTA along with the rest of the AHLTA suite.

Mr. WU. Okay. Thank you very much.

Dr. Cross, in your testimony, you stated that DoD and VA have funded a study to study the mutual development of a joint inpatient electronic health record. I understand that initiative took place this year.

Dr. CROSS. Correct.

Mr. WU. Can you tell why it has taken 15, 20 years to get to this point?

Dr. CROSS. I think this is a point in time where the situation was right to do this. I think you can certainly argue that it should have been looked at before.

I will ask my colleagues here to comment on that as well.

Mr. WU. I mean, I could go back and look at the congressional intent, the legislation, all the way back to 1982, the various legislative initiatives we had.

I have asked GAO to go back on our recess break to look at how many studies they have done and maybe a GAO study of all the GAO studies to see how many recommendations on this issue have been issued in the last decade where the recommendations have not been implemented.

I am just wondering. What was the impetus to all of a sudden January 2007 to do this?

Dr. CROSS. Actually, there was a good meeting between Dr. Jones and myself in my office where we discussed what we could do next and we moved that forward.

Mr. WU. Okay.

Dr. JONES. I think it is a number of factors. One is, as Dr. Cross said, we are working more closely together than we ever had before. I mean, we switched. You know, we have Chuck Campbell, who was working over at the VA, and Chuck Hume was working over. So we are working more closely together.

We realized the need, as somebody mentioned earlier, because of the Walter Reed issues and all the various task forces and committees puts additional impetus on making it happen and making it happen faster and making it happen right.

And then thirdly, I think with us, we were getting ready to invest more heavily into our inpatient record. We now, as you heard by an earlier person that testified, the AHLTA which was started as an outpatient record was only implemented into each of our medical centers last December, so we are the next phase was to move more aggressively into the inpatient.

And it is my understanding that the VA was looking at VistA to upgrade because it was time that they needed to refresh because of the Legacy system they have. So all those factors, I think, came together to, you know, make this time is right.

And this is not just a study to inform us. This is a study to inform us so that we can take action. And I would be surprised if we do not take the information from that study and make it happen.

Mr. WU. I have one question and one more than that. I think that Mr. Rodriguez asked the question. Do you think you will be able to implement Dole-Shalala within the timeframe?

Dr. JONES. Well, again, I think it depends on, you know, all of the issues of Dole-Shalala I cannot speak of. The thrust of both agencies and Secretary England, Secretary Gates, and I know on our VA counterparts is to implement as much as we can between the two agencies under existing law.

Of course, those things that we cannot implement because of law or because of legislative packages will be considered by this body and the Senate. But we are——

Mr. WU. Sir, do you see those legislative initiatives coming up any time soon?

Dr. JONES. It is my understanding that those packages have been delivered last week or the week before, I am not certain of the time, by the two secretaries.

Mr. WU. Thank you, sir.

Dr. CROSS. May I echo that we take that very seriously. Great emphasis and importance is given to that project. Some of the testimony that I included in my oral statement today related to time factors and so forth of what we are doing, I think, relate to that. And on many issues outside of the IT world, which is probably mostly outside of the IT world, we are moving forward aggressively as we can to implement those things.

Dr. TIBBITS. Let me add to that since I am the Co-Chair of Lines of Action 4 (LOA4) (eBenefits portal) which is the IT portion of this senior Oversight Committee process with Dr. Jones. And for just the IT slice of your question, yes, we are very committed to it.

We have a very aggressive series of meetings going on right now this month to gather requirements from all the other lines of action. We are now deeply engaged in costing out those requirements from an IT perspective, the IT support to all those other lines of action.

We will be presenting that IT plan sometime in the month of November whenever we are told to go present it to both deputy secretaries and that will subsequently result in certain decisions and actions with respect to funding and monitoring with a scoreboard-like approach of our progress.

So the Administration is very committed to that and we, I think, have everybody engaged as much as we possibly could in trying to make that happen at all levels of both the departments.

Mr. WU. Dr. Tibbits, would it be safe to assume that in the requirements identification that you would have a TBI component there, a mental health, and a PTSD component there?

Dr. TIBBITS. That is correct. There is a line of action, too, which is specifically focused on that.

Mr. WU. Okay. Dr. Cross, one last question.

Thank you for indulging me, Mr. Rodriguez.

Dr. Cross, you also stated VA and DoD are committed to ensuring an ongoing partnership to optimize health delivery to veterans

and military beneficiaries. Probably for the record, I would say here, it be a little onerous to do that now.

Could you highlight since 2003 when we created the HEC and the JEC all initiatives emanating from DoD, VA's Health Executive Committee, direct cost of these initiatives, specific measurable outcomes, everything that has been accomplished?

Dr. CROSS. Certainly I think we could do that for the record.

[The Health Executive Council Highlights, FY 2003–First Quarter for FY 2008, dated June 10, 2008, appears on p. 98.]

Mr. WU. Thank you very much.

Thank you, Mr. Rodriguez.

Mr. RODRIGUEZ. Thank you very much.

And both, Dr. Jones and Dr. Cross, thank you very much for your testimony.

Let me, as you have indicated, that we seem to have made some significant progress with your dialog. I would just encourage you to keep dialoguing with each other. This is really essential for our soldiers and our veterans to try to make this happen as smoothly as possible and as quickly as possible.

And so that it just makes sense for anyone who is providing access to healthcare to our soldiers that data and that folder or whatever the documentation is with that soldier that they have access after they leave the military and become veterans so that we can best not only treat them but see what we can do in terms of meeting their needs. And I think it would behoove us to try to move as quickly as possible.

And I would ask you once again, I guess, Dr. Jones and Dr. Cross, are there any other obstacles out there that we as a Congress can look at to try to make that happen as quickly as possible?

Dr. CROSS. Let me say very clearly that we support the generosity that Congress has shown with us. The cooperation that we have had, there is a new atmosphere, I think, between DoD and VA. We meet very frequently. We know each other on a first name basis. We are taking all of these initiatives very seriously and in many ways, it is a new world.

Mr. RODRIGUEZ. Thank you.

Dr. JONES. And I would just echo that, Mr. Chairman. I believe that Congress has been more than adequate and has already given us some funding in DoD to address TBI, PTSD, and mental health, and we are aggressively moving forward in those areas.

Mr. RODRIGUEZ. Because I would think that hopefully our next step, I know in some of the areas already, I know in El Paso, both the VA and the DoD, they are in the same facility. They might not communicate as much, but at some point, hopefully they will start communicating when they are providing access to healthcare.

And I have other communities and there are some throughout the country where it would be ideal for both, you know, the Department of Defense and the VA to get together in providing access to healthcare not only to our soldiers but also to our veterans. And where they could do that together, it just makes all the sense in the world in terms of being cost effective, not to mention in terms of getting access to our soldiers.

And so are there any now in terms of, I asked you what we could do, are there any obstacles there that both the Department of De-

fense and the Department of Veterans Affairs have that you still feel that you need to overcome?

Dr. Jones?

Dr. JONES. I think our main areas that we need to continue to pursue aggressively, which we are, the challenges that are before us are to ensure that we have funding at the same time that the VA has funding so that we can move forward with the various projects in tandem.

Secondly, on our side, it is helpful for us to—as you know, we have different color money in Washington and we have to have research and development money, sustained money, implementation funds, so there is different funds.

So we just need to make sure that we have adequate funding in the appropriate categories that can allow us to rapidly move forward as we come forward with our plans that Dr. Tibbits mentioned to ensure that we are meeting the needs, to implement Dole-Shalala. That is going to take funding. Congress, we hope you will consider that.

And, secondly, once we get the plan to have the joint inpatient record, that is going to take funding. So, again, we will be able to provide you the necessary justifications so that you will see fit to make that funding available. Those would be my comments, sir.

Mr. RODRIGUEZ. Thank you.

Dr. Cross?

Dr. CROSS. I will ask my IT colleagues, Dr. Tibbits, and others to comment as well.

But this is plowing new ground. We are out in front of our many civilian healthcare systems where they are still using paper records, where they are still transferring information by mail. And we are way out in advance of that. We are pioneering for the country, I think, on how to do this.

And I just hope that we can have the understanding that we are on, I think, the cutting edge of learning how to do this.

I will ask my IT colleagues to comment as well.

Dr. TIBBITS. Well, thank you, Dr. Cross, and thank you for the question. The learning is a key piece of this.

[The chart is attached to Dr. Cross' statement, which appears on p. 79.]

Dr. TIBBITS. Dr. Cross pointed out that as you look at the chart there on the easel, the dots get closer together as you go from left to right. The activity is becoming much more intense.

But the learning also has to happen and learning at all levels anywhere from setting requirements all the way down to deep in the bows of how a server is configured and not so much HIPAA, but more so the information security policies of both departments. A lot of exploration and learning has to happen there.

There is, however, a great interest, a great commitment on the part of the Administration to do so. The need could not be greater to serve our Nation's heroes which would bring me to my sort of last point here while I have the microphone for this time, this question.

And that is taking the need of our Nation's heroes, taking the need and formulating that into a plan. I think you have heard a lot of conversation, particularly from the GAO, but others also,

about the importance of such a plan. If we were and which we are doing now, by the way, once we have properly depicted that need, the high priority needs for information exchange to best serve our active-duty members and veterans, then we will have a framework to better explain how all this activity that you see here fits together, how the remaining activity that is already scheduled that you see there fits together, and what is the gap with respect to the need and what you do not see on that chart. That plan we will have together probably, let us say, by spring of next year. I would call that an information interoperability plan.

I want to be very careful to emphasize that information interoperability, the sharing of data, can jumpstart, as you see there on that board, can jumpstart the service to the way we treat, care for servicemembers and veterans before we ever decide to jointly develop software.

So while this study is going on and we are trying to figure out from a cost perspective will it save money and can it move the departments forward to jointly develop software, the data plan can help us now in the short term, in the medium term, and in the long term to meet veterans' needs and servicemembers' needs.

So that is the last piece of not just talking about the need, but actually using the need itself as a planning factor to put that integrated plan together. That is the next phase of sophistication we are going to get to and that should drive a lot of the prioritization activities to learn what it is we need to learn throughout that entire stack of layers of information processing that I just alluded to earlier.

Mr. RODRIGUEZ. Thank you.

Mr. Freeman?

Mr. FREEMAN. As Mr. Wu knows, I have been working with this for 10 years and I can honestly say in the last 3 or 4 years, the progress we have been able to make has moved forward astronomically actually in my opinion.

And I think one of the things the earlier panel said about the leadership, there is true leadership support. As both Dr. Cross and Dr. Jones have said, they worked very closely together.

And I think that as we have moved forward, it is not that we have created some of these applications, but I think the important point is that they are actually being used and they are benefiting the clinical care that we are providing veterans.

The Bidirectional Health Information Exchange that was discussed earlier with you, it gets over 3,700 queries a day in the VA. It is being used by the provider to provide quality clinical care for our wounded warriors and our veterans. And I think that says a lot about some of the work that we have done. Thanks.

Mr. RODRIGUEZ. Let me just indicate I want to thank you and also just indicate there is no doubt that we will be having another hearing based on the Chairman's comments, next year. And so we are hoping that we can make up some ground in that area.

And I am going to ask Mr. Wu if he has got any additional comments. No additional questions?

Thank you very much. And I hope that you continue to dialog together. I also am one of the few that not only sits on the authorizing Committee, but I sit on the Appropriations Committee, so I

would hope that you come to me and let me know if you need any more money. Okay?

Thank you.

[Whereupon, at 1:44 p.m., the Subcommittee was adjourned.]

APPENDIX

Prepared Statement of Hon. Harry E. Mitchell, Chairman, Subcommittee on Oversight and Investigations

Thank you all for coming today. I am pleased that so many people could attend this oversight hearing on sharing of electronic medical information between the Departments of Defense and Veterans Affairs. This is a critically important issue. Thousands of our service men and women require and will continue to require significant medical care as the result of the conflicts in Iraq and Afghanistan. The most seriously injured of our OEF and OIF veterans may need a lifetime of care, but even veterans returning with no visible injury may need assistance with PTSD or mild Traumatic Brain Injury.

DOD and VA are sharing more and more patients. For example, the patients at the VA's four polytrauma rehabilitation centers are almost all still on active duty. And active duty service members will be veterans sooner or later. A review by the VA's Inspector General of the 500,000 or so service members who left active duty in fiscal year 2005 shows that 92 percent had an encounter with the military health system while on active duty that resulted in a diagnostic code. In other words, nearly all of the veterans who go to the VA to get medical care will have military medical records that should be available to VA health care providers.

If anyone can convince the American people of the importance of electronic medical records, it is our first panel. Specialist Channing Moss is an Army soldier who was shot with a rocket propelled grenade that lodged in his body. He is alive and walking today because the medical evacuation team and combat surgeons who operated on him put their own lives in danger in order to remove live ordnance from Specialist Moss. Brigadier General Douglas Robb was chief surgeon of CENTCOM at the time, and he will discuss how important it was that a copy of the x-ray taken at the forward field hospital was available to the clinicians in Landstuhl before Specialist Moss arrived.

DOD and VA have been working on the electronic exchange of medical information for many years. For most of that time, the story is not a happy one. I am nevertheless pleased to be able to say that DOD and VA have made more progress in the past 12 to 18 months than they made in the preceding decade. But there is still much to be done. There is no reason why, in this day and age, DOD and VA cannot electronically share the information necessary to treat our service members and veterans. We should not have to wait any longer. I hope and I expect that DOD and VA will tell us today that, by no more than a year from now, clinicians in DOD and VA will have full electronic access to the medical information they need to treat their patients, whether that information resides in computers owned by DOD or by VA.

Prepared Statement of Hon. Ginny Brown-Waite, Ranking Republican Member, Subcommittee on Oversight and Investigations

Mr. Chairman, Thank you for yielding.

Mr. Chairman, I would like to thank you for calling this hearing to review the status of the electronic medical records sharing between DOD and VA. This Subcommittee has already held two hearings in the 110th Congress on the issue of seamless transition of our servicemembers.

The first hearing was held in March and the second in May, both of which focused primarily on the sharing of critical medical information of critically wounded servicemembers between DOD and VA.

I would like to assure the witnesses here today, that this issue is of the utmost importance to all Members of this Committee, regardless of political affiliation. I am pleased the Chairman has requested that representatives from DOD testify here today. It will be important to hear their perspective on the timely exchange of crit-

ical medical information between DOD and VA for the seamless continuum of delivering healthcare to our servicemembers.

I look forward to hearing the steps DOD has taken to allow all critical medical information to be viewed by the VA when active duty servicemembers are transferred to VA facilities. In addition, I will be interested in hearing from VA on whether technological obstacles or bureaucratic intransigence prevent this from occurring today.

This past week, staff members visited Keesler Air Force Base and the VA Medical Center in Biloxi, Mississippi to see how the Air Force and the VA are coming together in VA/DOD resource sharing.

Unfortunately, the progress in this area is a result of the devastation of Hurricane Katrina and the dynamic personalities of senior leadership at these facilities, and not the Veterans Administration and the Department of Defense Health Resources Sharing and Emergency Operations Act 1982.

It appears that the ball has moved forward more in the last 24 months than the last 25 years. It is a shame that it took Hurricane Katrina, the debacle at Walter Reed, and the devastating wounds of war to expedite progress between the two largest federal bureaucracies.

I am also looking forward to hearing from representatives of both departments about how they plan to implement the recommendations of the recently released Dole/Shalala Commission Report, and the Veterans Disability Benefits Commission Report.

Again, I would like to thank you, Mr. Chairman for holding this hearing. This issue is a top priority for our Subcommittee, and look forward to continuing our oversight responsibilities.

Prepared Statement of Brigadier General Douglas J. Robb, M.D., Commander, 81st Medical Group, Keesler Air Force Base, Biloxi, MS, Department of the Air Force, U.S. Department of Defense

INTRODUCTION

Mr. Chairman and members of this distinguished Subcommittee, thank you for inviting me here today. I am Brigadier General Douglas J. Robb and I served as the Command Surgeon, United States Central Command from 2004 to 2007. Currently I am serving as the Keesler Medical Center Commander and as the Senior Market Manager, Gulf Coast Multi-Service Market Office, Keesler Air Force Base, Biloxi, Mississippi. Thank you for the opportunity to express my advocacy for a Healthcare Information Systems platform and electronic medical record that supports the world class quality healthcare that our military and Department of Veterans Affairs veterans healthcare facilities provide to our DoD and VA beneficiaries.

HISTORICAL OVERVIEW

In my previous assignment as the CENTCOM Surgeon, I had the opportunity to witness the evolution of our deployed healthcare information systems platforms that support access to patient care data, as our wounded warriors move through the continuum of care: from our combat casualty care life savers, to our forward surgical teams, to our theater hospitals, and then onto our definitive care facilities at Landstuhl, Walter Reed, Bethesda, Wilford Hall, and VA Polytrauma Centers.

On 16 March 2006, Spc. Channing Moss was severely injured in an attack in southeastern Afghanistan. The lifesaving care performed by the combat lifesavers in his unit and the subsequent surgical stabilization by the forward surgical team and the Bagram Theater Hospital saved his life. What was also lifesaving was the ability of the surgeons at Landstuhl Hospital, Germany, who would receive Spc. Moss less than 24 hours after his initial injury, and the surgeons at Walter Reed to be able to view his operative notes and x-rays, before the patient arrived at their hospitals. This was accomplished via the Joint Patient Tracking Application, part of the DoD's deployed healthcare information systems platform.

Earlier that year, again in Afghanistan, a general surgeon and commander of one of the forward surgical teams, commented on his excitement when he was able to send completely digital trauma resuscitation and operative reports to the Bagram Combat Support Hospital, again before the patient arrived. This is something that had been his vision for our forward surgical teams for a long time. During his previous assignment, he had been a surgeon at Landstuhl, Germany, and was frustrated by the lack of medical data from the forward surgical teams' initial surgical resuscitation.

CURRENT ACTIVITIES

In my current position as the Senior Market Manager, Gulf Coast Multi-Service Market Manager, through collaborative and joint DoD and VA initiatives, we are entrusted with the in-garrison care of our DoD and VA beneficiaries. In this capacity, we also require a healthcare information system platform that supports access to real-time patient care data for our shared patient population. Our patients from the Gulf Coast Multi-Service Market are treated in DoD and VA hospitals and clinics that are often located in close proximity anywhere from Biloxi, to Pensacola, and continuing along the Florida Panhandle to Panama City. Our goal is provide quality services in a seamless manner. This requires an integrated healthcare information systems platform that is user friendly for our jointly operating DoD and VA healthcare facilities. Significant progress has been made in the past few years to bridge the gap of electronic information flow. Just last month, our staffs were excited when the bi-directional health information (BDHI) system became available at some of our facilities. Although not at its full capability yet, it is a very positive step in the right direction in our ability to view patient care data from both VA and DoD facilities.

CONCLUSION

In conclusion, as a former Combatant Command Surgeon and currently as the Senior Market Manager for the Gulf Coast Multi-Service Market Office, I continue to be a strong advocate for a healthcare information systems platform and electronic medical record that provides real time access to patient care data for our DoD and VA beneficiaries, heroes like Spc. Canning Moss, as they move through our deployed and garrison based continuum of care: combat casualty care, forward surgical resuscitation, in-theater hospitalization and finally our DoD and VA medical centers and clinics. The current capability has already proven itself in contributing to the quality of care for our beneficiaries. And with your support I believe we can continue to improve upon our already existing and evolving capability to further share and make available the full spectrum of electronic health information between the Department of Defense and the Department of Veterans Affairs. Mr. Chairman, Committee Members, thank you again for allowing me the opportunity to appear before you.

Prepared Statement of Valerie C. Melvin, Director, Human Capital and Management Information Systems Issues, U.S. Government Accountability Office

GAO Highlights

Information Technology—VA and DOD Continue to Expand Sharing of Medical Information, but Still Lack Comprehensive Electronic Medical Records

Why GAO Did This Study

The Department of Veterans Affairs (VA) and the Department of Defense (DOD) are engaged in ongoing efforts to share medical information, which is important in helping to ensure high-quality health care for active-duty military personnel and veterans. These efforts include a long-term program to develop modernized health information systems based on computable data: that is, data in a format that a computer application can act on—for example, to provide alerts to clinicians of drug allergies. In addition, the departments are engaged in short-term initiatives involving existing systems.

GAO was asked to testify on the history and current status of the departments' efforts to share health information. To develop this testimony, GAO reviewed its previous work, analyzed documents about current status and future plans and interviewed VA and DOD officials.

What GAO Recommends

GAO has previously made several recommendations on this topic, including that VA and DOD develop a detailed project management plan to guide their efforts to share patient health data. While the departments agreed with these recommendations, a comprehensive overall strategy that incorporates all of the ongoing activities still needs to be implemented.

What GAO Found

For almost a decade, VA and DOD have been pursuing ways to share health information and to create comprehensive electronic medical records. However, they have

faced considerable challenges in these efforts, leading to repeated changes in the focus of their initiatives and target completion dates. Currently, the two departments are pursuing both long- and short-term initiatives to share health information. Under their long-term initiative, the modern health information systems being developed by each department are to share standardized computable data through an interface between data repositories associated with each system. The repositories have now been developed, and the departments have begun to populate them with limited types of health information. In addition, the interface between the repositories has been implemented at seven VA and DOD sites, allowing computable outpatient pharmacy and drug allergy data to be exchanged. Implementing this interface is a milestone toward the departments' long-term goal, but more remains to be done. Besides extending the current capability throughout VA and DOD, the departments must still agree to standards for the remaining categories of medical information, populate the data repositories with this information, complete the development of the two modernized health information systems, and transition from their existing systems.

While pursuing their long-term effort to develop modernized systems, the two departments have also been working to share information in their existing systems. Among various short-term initiatives are a completed effort to allow the one-way transfer of health information from DOD to VA when service members leave the military, as well as ongoing demonstration projects to exchange limited data at selected sites. One of these projects, which builds on the one-way transfer capability, developed an interface between certain existing systems that allows a two-way view of current data on patients receiving care from both departments. VA and DOD are now expanding the sharing of additional medical information by using this interface to link other systems and databases. The departments have also established ad hoc processes to meet the immediate need to provide data on severely wounded service members to VA's polytrauma centers, which specialize in treating such patients. These processes include manual workarounds (such as scanning paper records) that are generally feasible only because the number of polytrauma patients is small. While these multiple initiatives and ad hoc processes have facilitated degrees of data sharing, they nonetheless highlight the need for continued efforts to integrate information systems and automate information exchange. At present, it is not clear how all the initiatives are to be incorporated into an overall strategy focused on achieving the departments' goal of comprehensive, seamless exchange of health information.

Mr. Chairman and Members of the Subcommittee:

I am pleased to be a part of today's continuing dialog on efforts by the Department of Veterans Affairs (VA) and the Department of Defense (DOD) to share electronic medical information. Over most of the past decade, the departments have been pursuing initiatives to share electronic medical information to help ensure that active-duty military personnel and veterans receive high-quality health care. The departments' efforts have included working toward a long-term vision of a single "comprehensive, lifelong medical record"[1] that would allow each service member to transition seamlessly between the two departments, as well as more short-term efforts focused on meeting immediate needs to exchange health information, including responding to current military crises.

Since 2001, we have reported or testified numerous times on the various initiatives undertaken by the departments to develop the capability to share health information. Our last testimony before this Subcommittee on May 8, 2007, highlighted key projects that the departments have pursued in this regard and the progress of their activities.[2] At your request, my statement today further discusses the history and current status of the departments' efforts.

The information in my testimony is based largely on our previous work in this area. To describe the history and current status of the departments' efforts to exchange patient health information, we reviewed our previous work, analyzed documents on various health initiatives, and interviewed VA and DOD officials about

[1] In 1996, the Presidential Advisory Committee on Gulf War Veterans' Illnesses reported on many deficiencies in VA's and DOD's data capabilities for handling service members' health information. In November 1997, the President called for the two agencies to start developing a "comprehensive, lifelong medical record for each service member," and in 1998 issued a directive requiring VA and DOD to develop a "computer-based patient record system that will accurately and efficiently exchange information."

[2] GAO, *Information Technology: VA and DOD Are Making Progress in Sharing Medical Information, but Are Far from Comprehensive Electronic Medical Records,* GAO–07–852T (Washington, D.C.: May 8, 2007).

current status and future plans. We conducted our work in support of this testimony during October 2007 in the Washington, D.C., area. Information on costs that have been incurred for the various projects was provided by responsible officials at each department. We did not audit the reported costs and thus cannot attest to their accuracy or completeness. All work on which this testimony is based was conducted in accordance with generally accepted government auditing standards.

Results in Brief

VA and DOD have been pursuing initiatives to share data between their health information systems and create comprehensive electronic medical records since 1998, following a call for the development of a comprehensive, integrated system to allow the two departments to share patient health information. However, the departments have faced considerable challenges in project planning and management, leading to repeated changes in the focus of their initiatives and target completion dates. In prior reviews of their efforts, we noted management weaknesses such as inadequate accountability and poor planning and oversight and made recommendations for improvement, including the development of a comprehensive and coordinated project management plan that defines the technical and managerial processes necessary to satisfy project requirements and to guide their activities. In response, by July 2002, VA and DOD revised their strategy, refocusing the project and dividing it into long-term and short-term initiatives. For the long term, both departments are modernizing their health information systems to replace their existing (legacy) systems and enable the new systems to share data and, ultimately, to have interoperable[3] electronic medical records. Unlike the legacy systems, the modernized systems are to be based on computable data—data that can be automatically processed in a healthcare system to, for example, provide alerts to clinicians on drug allergies, or to plot graphs of changes in vital signs such as blood pressure. For the short-term initiative, the departments focused on sharing information in existing systems.

VA and DOD have made progress in both their long-term and short-term initiatives, but much work remains to achieve the goal of interoperable electronic medical records and a seamless transition between the two departments. In the long-term project to develop modernized health information systems, the departments have begun to implement the first release of the interface between their modernized data repositories, and computable outpatient pharmacy and drug allergy data are being exchanged at seven VA and DoD sites. However, significant work remains, including agreeing to standards for the remaining categories of medical information and populating the data repositories with all this information. Regarding their short-term projects to share information in existing systems, the departments completed the Federal Health Information Exchange in 2004, and as of this month reported transferring clinical data on more than 4 million veterans. In addition, they have made progress on two demonstration projects: (1) the Laboratory Data Sharing Interface, deployed at nine localities, allows the departments to communicate orders for lab tests and their results electronically and (2) the Bidirectional Health Information Exchange allows a real-time, two-way view of certain outpatient health data from existing systems[4] at all VA and DoD sites, and certain inpatient discharge summary data[5] at all VA sites and 13 large DOD sites. Further, the two departments have undertaken ad hoc activities to accelerate the transmission of health information on severely wounded patients from DOD to VA's four polytrauma centers, which care for veterans and service members with severe traumatic brain injuries or disabling injuries, to more than one physical region or organ system. These ad hoc processes include manual workarounds, such as scanning paper records and individually transmitting radiological images, which are generally feasible only because the number of polytrauma patients is small (according to VA officials, about 460 with traumatic brain injuries to date).

Through all of these efforts, VA and DOD are exchanging health information. However, these exchanges have been limited, and it is not yet clear how they are to be integrated into an overall strategy to reach the departments' long-term goal of a comprehensive, seamless exchange of health information. Accordingly, as we have previously recommended, it remains critical for the departments to develop a comprehensive project plan that can guide their efforts to completion.

---

[3] Interoperability is the ability of two or more systems or components to exchange information and to use the information that has been exchanged.

[4] DOD's Composite Health Care System (CHCS) and VA's VistA (Veterans Health Information Systems and Technology Architecture).

[5] Specifically, inpatient discharge summary data stored in VA's VistA and DOD's Clinical Information System (CIS), a commercial health information system customized for DOD.

Background

In their efforts to modernize their health information systems and share medical information, VA and DoD start from different positions. As shown in table 1, VA has one integrated medical information system—the Veterans Health Information Systems and Technology Architecture (VistA)—which uses all electronic records. All 128 VA medical sites thus have access to all VistA information.[6] (Table 1 also shows, for completeness, VA's planned modernized system and its associated data repository.)

Table 1: VA Medical Information Systems and Data Base

System name		Description
Legacy systems		
VistA	Veterans Health Information Systems and Technology Architecture	Existing integrated health information system
Modernized system and repository		
HealtheVet VistA		Modernized health information system based on computable data
HDR	Health Data Repository	Data repository associated with modernized system

Source: GAO analysis of VA data.

In contrast, DOD has multiple medical information systems (table 2 illustrates certain selected systems). DOD's various systems are not integrated, and its 138 sites do not necessarily communicate with each other. In addition, not all of DOD's medical information is electronic: some records are paper-based.

Table 2: Selected DoD Medical Information Systems and Data Bases

System name		Description
Legacy systems		
CHCS	Composite Health Care System	Primary existing DoD health information system
CIS	Clinical Information System	Commercial health information system customized for DoD; used by some DoD facilities for inpatients
ICDB	Integrated Clinical Database	Health information system used by many Air Force facilities
TMDS	Theater Medical Data Store	Database to collect electronic medical information in combat theater for both outpatient care and serious injuries
JPTA	Joint Patient Tracking Application	Web-based application primarily used to track the movement of patients as they are transferred from location to location, but may include text-based medical information
Modernized system and repository		
AHLTA	Armed Forces Health Longitudinal Technology Application [a]	Modernized health information system, integrated and based on computable data

[6] A site represents one or more facilities—medical centers, hospitals, or outpatient clinics—that store their electronic health data in a single database.

CDR	Clinical Data Repository	Data repository associated with modernized system

[a] Formerly CHCS II.
Source: GAO analysis of DOD data.

VA and DOD Have Been Working to Exchange Health Information Since 1998

For nearly a decade, VA and DOD have been undertaking initiatives to exchange data between their health information systems and create comprehensive electronic records.[7] However, the departments have faced considerable challenges in project planning and management, leading to repeated changes in the focus and target completion dates of the initiatives.

As shown in figure 1, the departments' efforts have involved both long-term initiatives to modernize their health information systems[8] and short-term initiatives to respond to more immediate information-sharing needs.

Figure 1: Timeline of Selected VA/DOD Electronic Medical Records and Data Sharing Efforts

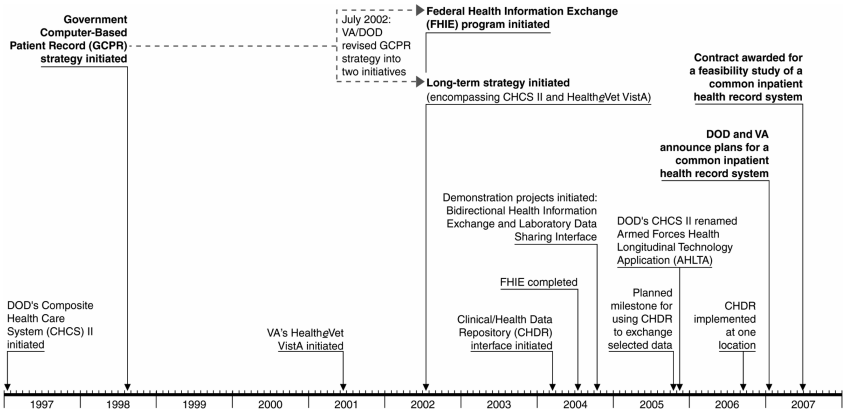

The departments' first initiative was the Government Computer-Based Patient Record (GCPR) project, which aimed to develop an electronic interface that would allow physicians and other authorized users at VA and DOD health facilities to access data from each other's health information systems. The interface was expected to compile requested patient information in a virtual record (that is, electronic as opposed to paper) that could be displayed on a user's computer screen.

We reviewed the GCPR project in 2001 and 2002, noting disappointing progress exacerbated in large part by inadequate accountability and poor planning and oversight, which raised questions about the departments' abilities to achieve a virtual medical record. We determined that the lack of a lead entity, clear mission, and detailed planning to achieve that mission made it difficult to monitor progress, identify project risks, and develop appropriate contingency plans.[9] In both years, we recommended that the departments enhance the project's overall management and accountability. In particular, we recommended that the departments designate a lead entity and a clear line of authority for the project; create comprehensive and coordinated plans that include an agreed-upon mission and clear goals, objectives, and performance measures; revise the project's original goals and objectives to align with

[7] Initially, the Indian Health Service (IHS) was also a party to this effort, having been included because of its population-based research expertise and its longstanding relationship with VA. However, IHS was not included in a later revised strategy for electronically sharing patient health information.

[8] DOD began efforts to modernize its existing health information system (CHCS) in 1997 and VA began efforts to modernize its existing health information system (VistA) in 2001.

[9] GAO, *Veterans Affairs: Sustained Management Attention Is Key to Achieving Information Technology Results,* GAO–02–703 (Washington, D.C.: June 12, 2002) and *Computer-Based Patient Records: Better Planning and Oversight by VA, DOD, and IHS Would Enhance Health Data Sharing,* GAO–01–459 (Washington, D.C.: Apr. 30, 2001).

the current strategy; commit the executive support necessary to adequately manage the project; and ensure that it followed sound project management principles.

In response, by July 2002, the two departments had revised their strategy, refocusing the project and dividing it into two initiatives. A short-term initiative, the Federal Health Information Exchange (FHIE), was to enable DOD to electronically transfer service members' health information to VA when the members left active duty. VA was designated as the lead entity for implementing FHIE, which was completed in 2004. A longer-term initiative was to develop a common health information architecture that would allow a two-way exchange of health information. The common architecture is to include standardized, computable data, communications, security, and high-performance health information systems (these systems, DOD's Composite Health Care System II and VA's HealtheVet VistA, were already in development, as shown in the figure).[10] The departments' modernized systems are to store information (in standardized, computable form) in separate data repositories: DOD's Clinical Data Repository (CDR) and VA's Health Data Repository (HDR). The two repositories are to exchange information through an interface named CHDR.[11]

In March 2004, the departments began to develop the CHDR interface. They planned to begin implementation by October 2005;[12] however, implementation of the first release of the interface (at one site) occurred in September 2006, almost a year beyond the target date. In a report in June 2004,[13] we identified a number of management weaknesses that could have contributed to this delay and made a number of recommendations, including creation of a comprehensive and coordinated project management plan. The departments agreed with our recommendations and took steps to improve the management of the CHDR initiative, designating a lead entity with final decision-making authority and establishing a project management structure. However, as we noted in subsequent testimony,[14] the initiative did not have a detailed project management plan that described the technical and managerial processes necessary to satisfy project requirements (including a work breakdown structure and schedule for all development, testing, and implementation tasks), as we had recommended.

In October 2004, responding to a congressional mandate,[15] the departments established two more short-term initiatives: the Laboratory Data Sharing Interface, aimed at allowing VA and DOD facilities to share laboratory resources, and the Bidirectional Health Information Exchange (BHIE), aimed at giving both departments' clinicians access to records on shared patients (that is, those who receive care from both departments).[16] As demonstration projects, these initiatives were limited in scope, with the intention of providing interim solutions to the departments' needs for more immediate health information sharing. However, because BHIE provided access to up-to-date information, the departments' clinicians expressed strong interest in expanding its use. As a result, the departments began planning to broaden this capability and expand its implementation considerably. Extending BHIE connectivity could provide each department with access to most data in the other's legacy systems, until such time as the departments' modernized systems are fully developed and implemented. According to a VA/DOD annual report[17] and program officials, the departments now consider BHIE an interim step in their overall strategy to create a two-way exchange of electronic medical records.

---

[10] DOD's existing Composite Health Care System (CHCS) was being modernized as CHCS II, now renamed AHLTA (Armed Forces Health Longitudinal Technology Application). VA's existing VistA system was being modernized as HealtheVet VistA.

[11] The name CHDR, pronounced "cheddar," combines the names of the two repositories.

[12] December 2004 VA and DOD Joint Strategic Plan.

[13] GAO, *Computer-Based Patient Records: VA and DOD Efforts to Exchange Health Data Could Benefit from Improved Planning and Project Management,* GAO–04–687 (Washington, D.C.: June 7, 2004).

[14] GAO, *Computer-Based Patient Records: VA and DOD Made Progress, but Much Work Remains to Fully Share Medical Information,* GAO–05–1051T (Washington, D.C.: Sept. 28, 2005) and *Information Technology: VA and DOD Face Challenges in Completing Key Efforts,* GAO–06–905T (Washington, D.C.: June 22, 2006).

[15] The Bob Stump National Defense Authorization Act for Fiscal Year 2003 (Pub. L. No. 107–314, § 721, Dec. 2, 2002) mandated that the departments conduct demonstration projects to test the feasibility, advantages, and disadvantages of measures and programs designed to improve the sharing and coordination of health care and health care resources between the departments.

[16] To create BHIE, the departments drew on the architecture and framework of the information transfer system established by the FHIE project. Unlike FHIE, which provides a one-way transfer of information to VA when a service member separates from the military, the two-way system allows clinicians in both departments to view, in real time, limited health data (in text form) from the departments' current health information systems.

[17] December 2004 VA and DOD Joint Strategic Plan.

The departments' reported costs for the various sharing initiatives and the modernization of their health information systems through fiscal year 2007 are shown in table 3.

Table 3: Reported Costs of VA and DOD Initiatives Since Inception

Project	VA expenditure	DOD expenditure
HealtheVet VistA	$681.7 million through FY 2006	——
AHLTA	——	$954.3 million through FY 2007 (estimated).
Joint initiatives:		
CHDR	4.1 million	DOD does not account for these projects separately.
FHIE	65.5 million	
LDSI	2.8 million	
BHIE	6.3 million	
Total	$78.7 million	$89.7 million through FY 2007.

Source: VA and DOD data.

Beyond these initiatives, in January 2007, the departments announced a further change to their information-sharing strategy: their intention to jointly develop a new inpatient medical record system. On July 31, 2007, they awarded a contract for a feasibility study.[18] According to the departments, adopting this joint solution is expected to facilitate the seamless transition of active-duty service members to veteran status, and make inpatient health care data on shared patients immediately accessible to both DOD and VA. In addition, the departments believe that a joint development effort could enable them to realize significant cost savings. We have not evaluated the departments' plans or strategy for this new system.

Other Evaluations Have Recommended Strengthening the Management and Planning of the Departments' Health Information Initiatives

Throughout the history of these initiatives, evaluations besides our own have found deficiencies in the departments' efforts, especially with regard to the lack of comprehensive planning. For example, a recent presidential task force identified the need for VA and DOD to improve their long-term planning.[19] This task force, reporting on gaps in services provided to returning veterans, noted problems in sharing information on wounded service members, including the inability of VA providers to access paper DOD inpatient health records. The task force stated that although significant progress has been made towards sharing electronic information, more needs to be done, and recommended that VA and DOD continue to identify long-term initiatives and define the scope and elements of a joint inpatient electronic health record. In addition, in fiscal year 2006, Congress did not provide all the funding requested for HealtheVet VistA because it did not consider that the funding had been adequately justified.

VA and DOD Are Exchanging Limited Medical Information, but a Seamlessly Shared Medical Record Will Require Much More Work

VA and DOD have made progress in both their long-term and short-term initiatives to share health information. In the long-term project to modernize their health information systems, the departments have begun, among other things, to implement the first release of the interface between their modernized data repositories. The departments have also made progress in their short-term projects to share information in existing systems, having completed two initiatives, and are making important progress on another. In addition, the departments have undertaken ad hoc activities to accelerate the transmission of health information on severely wounded patients from DOD to VA's four polytrauma centers. However, despite the progress

[18] The contract is for a 6-month base period, with a follow-on 6-month option period. The cost for the 6-month base period is about $2 million.

[19] Task Force on Returning Global War on Terror Heroes, *Report to the President* (Apr. 19, 2007).

made and the sharing achieved, the tasks remaining to reach the goal of a shared electronic medical record are substantial.

VA and DOD Have Begun Deployment of a Modernized Data Interface

In their long-term effort to share health information, VA and DOD have completed the development of their modernized data repositories, agreed on standards for various types of data, and begun to populate the repositories with these data.[20] In addition, they have now implemented the first release of the CHDR interface. According to the departments' officials, all DOD sites can now access the interface, and it is expected to be available across VA when necessary software updates are released. (Currently 103 of 128 VA sites have received these updates.)[21] At seven sites, VA and DOD are now exchanging limited medical information for shared patients: specifically, computable outpatient pharmacy and drug allergy information.

CHDR is the conduit for exchanging computable medical information between the departments. Data transmitted via the interface are permanently stored in each department's new data repository, CDR, and HDR. Once in the repositories, these computable data can be used by DOD and VA at all sites through their existing systems. CHDR also provides terminology mediation (translation of one agency's terminology into the other's). The departments' plans call for further developing the capability to exchange computable laboratory results data through the interface during fiscal year 2008.

Although implementing this interface is an important accomplishment, the departments are still a long way from completing the modernized health information systems and comprehensive longitudinal health records. While DOD and VA had originally projected completion dates of 2011 and 2012, respectively, for their modernized systems, the departments' officials told us that there is currently no scheduled completion date for either system. VA is evaluating a proposal that would result in completion of its system in 2015; DOD is evaluating the impact of the new study on a joint inpatient medical record and has not indicated a new completion date.

Further, both departments have still to identify the next types of data to be stored in the repositories. The departments will then have to populate the repositories with the standardized data. This involves different tasks for each department. Specifically, while VA's medical records are already electronic, it must still convert them into the interoperable format appropriate for its repository. DOD, in addition to converting current records from its multiple systems, must also address medical records that are not automated. As pointed out by a recent Army Inspector General's report, some DOD facilities are having problems with hard copy records.[22] The report also identified inaccurate and incomplete health data as a problem to be addressed. Before the departments can achieve the long-term goal of seamless sharing of medical information, all of these tasks and challenges will have to be addressed. Accordingly, it is essential that the departments develop a comprehensive project plan to guide these efforts to completion, as we have previously recommended.

Short-Term Projects Are Allowing VA and DOD to Exchange Limited Health Information

In addition to the long-term effort previously described, the two departments have made some progress in meeting immediate needs to share information in their respective legacy systems through short-term projects which, as mentioned earlier, are in various stages of completion. They have also set up special processes to transfer data from DOD facilities to VA's polytrauma centers in a further effort to more effectively treat Traumatic Brain Injuries and other especially severe injuries.

One-Way Transfer Capability Is Operational

DOD has been using FHIE to transfer information to VA since 2002. According to DOD officials, 194 million clinical messages on more than 4 million veterans had been transferred to the FHIE data repository as of September 2007, including laboratory results, radiology results, outpatient pharmacy data, allergy information, consultation reports, elements of the standard ambulatory data record, and demographic data. Further, since July 2005, FHIE has been used to transfer pre- and

[20] DOD has populated CDR with information for outpatient encounters, drug allergies, and order entries and results for outpatient pharmacy/lab orders. VA has populated HDR with patient demographics, vital signs records, allergy data, and outpatient pharmacy data; in July, the department added chemistry and hematology, and in September, microbiology.

[21] The Remote Data Interoperability software upgrade provides the capability for the automated checks and alerts allowed by computable data.

[22] Inspector General, Army, *Army Physical Disability Evaluation System Inspection* (March 2007).

post-deployment health assessment and reassessment data; as of September 2007, VA had access to data for more than 793,000 separated service members and demobilized Reserve and National Guard members who had been deployed. Transfers are done in batches once a month, or weekly for veterans who have been referred to VA treatment facilities. According to a joint VA/DOD report,[23] FHIE has made a significant contribution to the delivery and continuity of care of separated service members as they transition to veteran status, as well as to the adjudication of disability claims.

Laboratory Interface Initiative Allows VA and DOD to Share Lab Resources

One of the departments' demonstration projects—the Laboratory Data Sharing Interface (LDSI)—is now fully operational and is deployed when local agencies have a business case for its use and sign an agreement. It requires customization for each locality and is currently deployed at nine locations. LDSI currently supports a variety of chemistry and hematology tests, and, at one of the nine locations, anatomic pathology and microbiology tests.

Once LDSI is implemented at a facility, the only nonautomated action needed for a laboratory test is transporting the specimens. If a test is not performed at a VA or DOD doctor's home facility, the doctor can order the test, the order is transmitted electronically to the appropriate lab (the other department's facility or in some cases a local commercial lab), and the results are returned electronically.

Among the benefits of the LDSI interface, according to VA and DOD, are increased speed in receiving laboratory results and decreased errors from manual entry of orders. The LDSI project manager in San Antonio stated that another benefit of the project is the time saved by eliminating the need to rekey orders at processing labs to input the information into the laboratories' systems. Additionally, the San Antonio VA facility no longer has to contract out some of its laboratory work to private companies, but instead uses the DOD laboratory.

Two-Way Interface Allows Real-Time Viewing of Text Information

Developed under a second demonstration project, the BHIE interface permits a medical care provider to query selected health information on patients from all VA and DOD sites and to view that data onscreen almost immediately. It not only allows the two departments to view each other's information, but it also allows DOD sites to see previously inaccessible data at other DOD sites.

VA and DOD have been making progress on expanding the BHIE interface. As initially developed, the interface provided access to information in VA's VistA and DOD's Composite Health Care System, but it is currently being expanded to query data in other DOD systems and databases. In particular, the interface has been expanded to DOD's:

- Modernized data repository, CDR, which has enabled department-wide access to outpatient data for pharmacy and inpatient and outpatient allergy, radiology, chemistry, and hematology data since July 2007, and to microbiology data since September 2007.
- Clinical Information System (CIS), an inpatient system used by some DOD facilities; the interface enables bidirectional views of discharge summaries and is currently deployed at 13 large DOD sites.
- Theater Medical Data Store, which became operational in October 2007, enabling access to inpatient and outpatient clinical information from combat theaters.

The departments are also taking steps to make more data elements available through BHIE. VA and DOD staff told us that by the end of the first quarter of fiscal year 2008, they plan to add provider notes, procedures, and problem lists. Later in fiscal year 2008, they plan to add vital signs, scanned images and documents, family history, social history, and other history questionnaires. In addition, a VA/DOD demonstration site in El Paso began sharing radiological images between the VA and DOD facilities in September 2007 using the BHIE/FHIE infrastructure.[24]

Types of Data Shared by DOD and VA Are Growing but Remain Limited

Although VA and DOD are sharing various types of health data, the type of data being shared has been limited and significant work remains to expand the data shared and integrate the various initiatives. Table 4 summarizes the types of health

[23] December 2004, VA and DOD Joint Strategic Plan.

[24] To create BHIE, the departments drew on the architecture and framework of the information transfer system established by the FHIE project.

data currently shared via the long- and short-term initiatives we have described, as well as additional types of data that are currently planned for sharing. While this gives some indication of the scale of the tasks involved in sharing medical information, it does not depict the full extent of information that is currently being captured in the health information systems at VA and DOD.

Table 4—Data Elements Made Available and Planned by DOD–VA Initiatives

Initiative	Data elements		Comments
	Available	Planned	
CHDR	Outpatient pharmacy Drug allergy	Laboratory data	Computable data are exchanged between one department's data repository and the other's.
FHIE	Patient demographics Laboratory results Radiology reports Outpatient pharmacy information Admission discharge transfer data Discharge summaries Consult reports Allergies Data from the DOD Standard Ambulatory Data Record Pre- and post-deployment assessments	None	One-way batch transfer of text data from DOD to VA occurs weekly if discharged patient has been referred to VA for treatment; otherwise monthly.
LDSI	Laboratory orders Laboratory results (chemistry, hematology and microbiology at two localities)	Microbiology Anatomic pathology	Noncomputable text data are transferred.
BHIE	Outpatient pharmacy data Drug and food allergy information Surgical pathology reports Microbiology results Cytology reports Chemistry and hematology reports Laboratory orders Radiology text reports Inpatient discharge summaries and/or emergency room notes from CIS at 13 DOD and all VA sites	Provider notes Procedures Problem lists Vital signs Scanned images and documents Family history Social history Other history questionnaires Radiology images	Data are not transferred but can be viewed.

Source: GAO analysis of VA and DOD data.

Special Procedures Provide Information to VA Polytrauma Centers

In addition to the information technology initiatives described, DOD and VA have set up special procedures to transfer medical information to VA's four polytrauma centers, which treat active duty service members and veterans severely wounded in combat.[25] Some examples of polytrauma include Traumatic Brain Injury, amputations, and loss of hearing or vision.[26]

When service members are seriously injured in a combat theater overseas, they are first treated locally. They are then generally evacuated to Landstuhl Medical Center in Germany, after which they are transferred to a military treatment facility in the United States, usually Walter Reed Army Medical Center in Washington, D.C.; the National Naval Medical Center in Bethesda, Maryland; or Brooke Army Medical Center, at Fort Sam Houston, Texas. From these facilities, service members suffering from polytrauma may be transferred to one of VA's four polytrauma centers for treatment.[27]

At each of these locations, the injured service members will accumulate medical records, in addition to medical records already in existence before they were injured.

[25] In particular, clinicians require access to discharge notices, which describe the treatment given at previous medical facilities and the status of patients when they left those facilities.

[26] Polytrauma centers care for veterans and returning service members with injuries to more than one physical region or organ system, one of which may be life threatening, and which result in physical, cognitive, psychological, or psychosocial impairments and functional disability.

[27] The four Polytrauma Rehabilitation Centers are in Richmond, Virginia; Tampa, Florida; Minneapolis, Minnesota; and Palo Alto, California.

According to DOD officials, when patients are referred to VA for care, DOD sends copies of medical records documenting treatment provided by the referring DOD facility along with them. The DOD medical information is currently collected in several different systems:

1. In the combat theater, electronic medical information may be collected for a variety of reasons, including routine outpatient care, as well as serious injuries. These data are stored in the Theater Medical Data Store. As mentioned earlier, the BHIE interface to this database became operational in October.
2. At Landstuhl, inpatient medical records are paper-based (except for discharge summaries). The paper records are sent with a patient as the individual is transferred for treatment in the United States. DOD officials told us that the paper record is the official DOD medical record, although AHLTA is used extensively to provide outpatient encounter information for medical records purposes.
3. At the DOD treatment facility (Walter Reed, Bethesda, or Brooke), additional inpatient information is recorded in CIS and outpatient pharmacy and drug information are stored in CDR; other health information continues to be stored in local CHCS databases.

When service members are transferred to a VA polytrauma center, VA and DOD have several ad hoc processes in place to electronically transfer the patients' medical information:

- DOD has set up secure links to enable a limited number of clinicians at the polytrauma centers to log directly into CIS at Walter Reed and Bethesda Naval Hospital to access patient data.
- Staff at Walter Reed, Brooke, and Bethesda medical centers collect paper records, print records from CIS, scan all these, and transmit the scanned data to the four polytrauma centers. DOD staff pointed out that this laborious process is feasible only because the number of polytrauma patients is small. According to VA officials, 460 severe Traumatic Brain Injury patients had been treated at the polytrauma centers through fiscal year 2007. According to DOD officials, the medical records for 81 patients planned for transfer or already at a VA polytrauma center were scanned and provided to VA between April 1 and October 11 of this year. Digital radiology images were also provided for 48 patients.
- Staff at Walter Reed and Bethesda are transmitting radiology images electronically to the four polytrauma centers. Access to radiology images is a high priority for polytrauma center doctors, but like scanning paper records, transmitting these images requires manual intervention: when each image is received at VA, it must be individually uploaded to VistA's imagery viewing capability. This process would not be practical for large volumes of images.
- VA has access to outpatient data (via BHIE) from all DOD sites, including Landstuhl.

These special efforts to transfer medical information on seriously wounded patients represent important additional steps to facilitate the sharing of information that is vital to providing polytrauma patients with quality health care.

In summary, VA and DOD are exchanging health information via their long- and short-term initiatives and continue to expand sharing of medical information via BHIE. However, these exchanges have been limited, and significant work remains to fully achieve the goal of exchanging interoperable, computable data. Work still to be done includes agreeing to standards for the remaining categories of medical information; populating the data repositories with all this information; completing the development of Health*e*Vet, VistA, and AHLTA; and transitioning from the legacy systems. To complete this work and achieve the departments' ultimate goal of a maintaining a lifelong electronic medical record that will follow service members as they transition from active to veteran status, a comprehensive and coordinated project management plan that defines the technical and managerial processes necessary to satisfy project requirements and to guide their activities continues to be of vital importance. We have previously recommended that the departments develop such a plan and that it include a work breakdown structure and schedule for all development, testing, and implementation tasks. Without such a detailed plan, VA and DOD increase the risk that the long-term project will not deliver the planned capabilities in the time and at the cost expected. Further, it is not clear how all the initiatives we have described today are to be incorporated into an overall strategy toward achieving the departments' goal of a comprehensive, seamless exchange of health information.

This concludes my statement. I would be pleased to respond to any questions that you may have.

Contacts and Acknowledgments

If you have any questions concerning this testimony, please contact Valerie C. Melvin, Director, Human Capital and Management Information Systems Issues, at (202) 512–6304 or melvinv@gao.gov. Other individuals who made key contributions to this testimony are Barbara Oliver, Assistant Director); Nancy Glover, Glenn Spiegel, and Amos Tevelow.

Related GAO Products

Computer-Based Patient Records: Better Planning and Oversight by VA, DOD, and IHS Would Enhance Health Data Sharing. GAO–01–459. Washington, D.C.: April 30, 2001.

Veterans Affairs: Sustained Management Attention Is Key to Achieving Information Technology Results. GAO–02–703. Washington, D.C.: June 12, 2002.

Computer-Based Patient Records: Short-Term Progress Made, but Much Work Remains to Achieve a Two-Way Data Exchange Between VA and DOD Health Systems. GAO–04–271T. Washington, D.C.: November 19, 2003.

Computer-Based Patient Records: Sound Planning and Project Management Are Needed to Achieve a Two-Way Exchange of VA and DOD Health Data. GAO–04–402T. Washington, D.C.: March 17, 2004.

Computer-Based Patient Records: VA and DOD Efforts to Exchange Health Data Could Benefit from Improved Planning and Project Management. GAO–04–687. Washington, D.C.: June 7, 2004.

Computer-Based Patient Records: VA and DOD Made Progress, but Much Work Remains to Fully Share Medical Information. GAO–05–1051T. Washington, D.C.: September 28, 2005.

Information Technology: VA and DOD Face Challenges in Completing Key Efforts. GAO–06–905T. Washington, D.C.: June 22, 2006.

DOD and VA Exchange of Computable Pharmacy Data. GAO–07–554R. Washington, D.C.: April 30, 2007.

Information Technology: VA and DOD Are Making Progress in Sharing Medical Information, but Are Far from Comprehensive Electronic Medical Records, GAO–07–852T. Washington, D.C.: May 8, 2007.

Information Technology: VA and DOD Are Making Progress in Sharing Medical Information, but Remain Far from Having Comprehensive Electronic Medical Records, GAO–07–1108T. Washington, D.C.: July 18, 2007.

Prepared Statement of Colonel Keith Salzman, M.D., MPH, FAAFP, FACHE, Chief of Informatics, Western Region Medical Command and Madigan Army Medical Center, Tacoma, WA, Department of the Army, U.S. Department of Defense

Chairman Mitchell, Congresswoman Brown-Waite and distinguished Members of the Subcommittee, thank you for inviting me to discuss the information technology sharing project between Madigan Army Medical Center and VA Puget Sound. I am Colonel Keith Salzman, a physician and a DoD/AMEDD leader in the newly emerging discipline of Informatics and it is my privilege to serve as the Chief of Informatics at Western Regional Medical Command/Madigan Army Medical Center where we enjoy a long history of command support for our work in Informatics.

I arrived at Madigan as the announcement was made that Madigan and VA Puget Sound would be working together to share electronic clinical information. I joined the team as a steering Committee Member. While the submission for the information sharing project occurred prior to my arrival, I have been on the project since its inception and continue to the present. We have completed all of the business plan objectives in 3 years of a 4 year project and are using the remaining funds to provide additional requests for document exchange that support polytrauma information needs as well as other key documents and data types that contribute to extending interoperability, on the approval of the DoD–VA oversight Committee Members.

The Madigan-VA Puget Sound project arose in response to congressional requirements for the DoD and VA to each contribute set aside funding for 4 years to collaborate on sharing clinical information and care to improve healthcare services to shared patients. At the outset of this testimony I would underscore our assessment that; the choice on many levels between 'either', 'or' is more appropriately answered as 'both'. I will explain as I review this project.

This particular demonstration was undertaken in response to section 722 of the FY 2003 National Defense Authorization Act which required no less than three dem-

onstration projects of DoD/VA coordinated systems involving budget/financial management; staffing/assignment; and Information Management/Information Technology (IM/IT). Madigan and VA Puget Sound were selected for this project based on the established clinical sharing that was in place and the need to improve the exchange of clinical information to provide care for the mutual patients cared for at Madigan Army Medical Center, and the American Lake and Seattle VA centers that make up the VA Puget Sound Healthcare System.

The initial challenges surrounded the learning required to overcome the first 'either-or' proposition of who drove the project: enterprise or the local site. A critical first lesson learned was—'both'. The local site had access to the clinical end user community and the requirements necessary to improve the flow of information while the enterprise had ownership of the architecture and systems in which requirements would be built and deployed. At the outset it is important to state that while this project is a demonstration project, all of the deliverables are being used by the enterprise systems of both the DoD and VA in production, in near real time (meaning seconds to minutes as a rule, not instantaneous or days to weeks).

After the initial assembly of local and enterprise teams and review and approval of a detailed business plan, the teams moved forward with iterative delivery of tangible products implemented and delivered for use in enterprise systems (SHARE for the DoD view) and Remote Data View in the Computerized Patient Record System (CPRS the VA view) of the Bi-Directional Health Information Exchange (BHIE) validated dual beneficiary patients. The work cycles for this project were generally 6–9 months in duration.

A second lesson learned was that while each system had its own test patients, shared test patients served the same purpose for interoperability (that purpose being validating information compilation and flow within the shared framework). While not as profound, the benefit of 'either-or' answered in 'both' facilitated testing, training and expansion of functionality.

The critical dialog between clinical end user and the development team at the local level, combined with an active dialog between local and enterprise team members, ensured that a principle of software development (namely to correct functional problems as they are identified in the design phase) proceeds iteratively and cost effectively. The savings can be significant over allowing major design problems to persist into production. This exemplifies another 'both' solution to an 'either-or' proposition.

Regarding requirements specifications, we observed that keeping the user requirements in sight while drafting the statement of work and contracting progress will save re-doing a product after-the-fact. A case in point is work on delivery of specified note types. The initial requirement was for seven note types. Through a disconnected process of contracting, the requirement was interpreted as all notes, creating an information retrieval and storage problem, unintended consequences of assumptions made by contractors making assumptions about what the end users really needed. The experience was used later in our development of requirements by keeping an open dialog between the end users and the enterprise-another 'both' solution.

With regard to the elephant in the room—establishing either AHLTA or VistA across both Departments-we observed the following:

There are strengths and weaknesses in both systems that complement each other. AHLTA is integrated world-wide and available 24/7. There are functionality problems that are being worked to improve use at the clinical and business level. VistA shows the benefits of local design in its adoption by end users who are more inclined to buy into a product they created. The downside is the historic lack of configuration management. I use management intentionally as against configuration control. The VA faces big challenges in reorganization and must be careful not to destroy the strategy that delivered its success while addressing its Achilles heel of decentralized, unmanaged growth. The cost of imposing one system on both organizations now would be prohibitive. Establishing interoperability and designing a strategy of convergence over the next 10–20 years will allow a 'both' solution that capitalizes on best practices and less disruptive changes to either system.

By using an interoperable approach, the DoD and VA, who own about 50% of the penetration of the Electronic Medical Record (EMR) on the national level, can pave the way for interoperability as use of the EMR extends from large organizations to the small provider groups and individual patients who constitute the majority of the Nation and who are not benefiting from an EMR. We are using the strategy of interoperability to extend to our indirect care providers in TRICARE and CHAMP–VA to capture the documentation that occurs outside of our EMRs. The extension makes a natural bridge to Regional Health Organizations.

A key to success in our strategy was to use messaging standards (HL7 (Health Level 7), Clinical Document Architecture (CDA), Release 1 and 2), which conform

to security documentation requirements and integrate with the enterprise constraints from the local level. As stated at the beginning, this partnership between a local development cell immersed in the end user environment and the enterprise for configuration management is a critical model/partnership to succeed in developing software and hardware solutions for clinical-business processes that support healthcare delivery for our beneficiaries.

An observation regarding COTS (commercial off the shelf) solutions for federal agencies is that common products such as identity management and Single Sign On/Context management solutions can be purchased in bulk with significant efficiencies for the government.

In the end, we found that crossing new frontiers in collaborative work between federal agencies and local/enterprise ends of those agencies underscored our finding that 'both' solutions work better than 'either-or' solutions.

These comments summarize what I would offer as a steering Committee Member engaged in this project from the start. Subject to your questions I would like to thank the Subcommittee again for allowing us to share our insights on this critical work that is progressing successfully. I would also encourage Congress to continue its support of this program and each of the agencies involved. I look forward to your questions.

Appendix A: Data Currently Being Shared

- Outpatient medications
- Allergies
- Lab—Chemistry, Hematology, Micro, Path, etc
- Radiology Text Reports
- Pre and Post Deployment Assessments
- Post Deployment Health Re-Assessment
- Discharge Summaries (DoD Essentris Sites and VA)
- MAMC legacy outpatient notes to VA
- Theater Clinical Data
- Op Reports, Surgical Reports, History & Physical, Consult Results and Progress Notes (Fall 2007)

Appendix B:

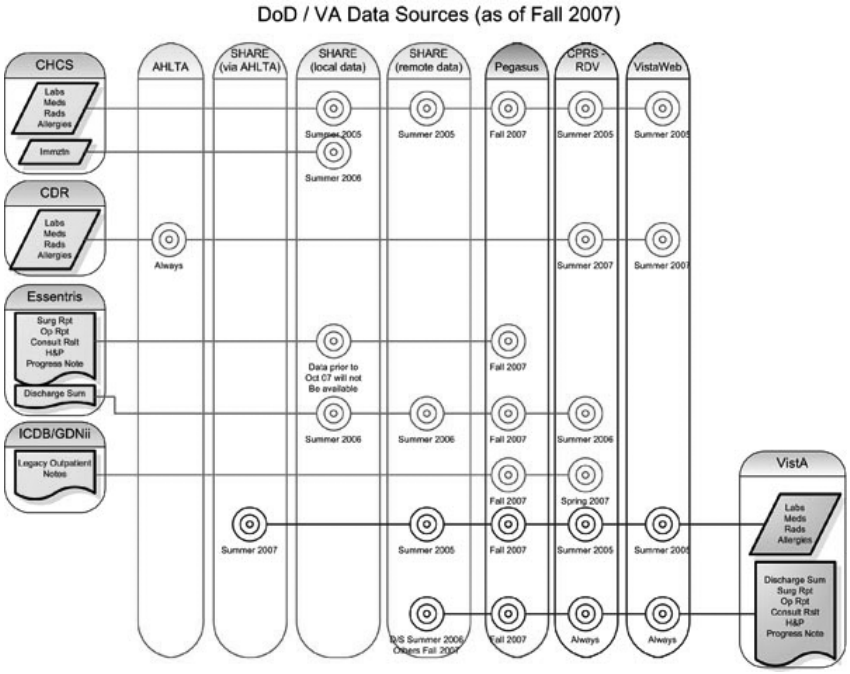

Prepared Statement of Howard B. Green, PMP, Deputy, Operations Management, Veterans Health Information Technology, Office of Enterprise Development, Office of Information and Technology, U.S. Department of Veterans Affairs

Thank you, Mr. Chairman. I would like to thank you for the opportunity to testify on the Sharing of Electronic Medical Information between the Department of Defense and the Department of Veterans Affairs, what is being done to accomplish the objectives, and the viability of the approach.

I have been a member of the Department of Veterans Affairs Health IT community for over 19 years serving in multiple capacities at the local, regional Veteran Integrated Services Network (VISN) and national level. Prior to joining the Office of Information and Technology in 2004, I was the Chief Information Officer for the Heartland Network (VISN 15) and was responsible for the introduction of VA's VistA system at all facilities and clinics in the region. Most recently, as Deputy for Operations Management within the Veterans Health IT Portfolio, I participated as a staff member on the President's Commission for America's Returning Wounded Warriors, and with my DoD counterpart was responsible for the creation of the information technology chapter and final report recommendations. Following that assignment, I have been given the responsibility for coordinating many of the recommendations from the President's Commission report.

Systems Supporting the Exchange of Clinical Information

Formal activities related to the sharing of clinical information between the Department of Veterans Affairs (VA) and the Department of Defense (DoD) have been ongoing since 2001. Though there are a number of systems that have been developed to support this function, for all intents and purposes the overarching goal is to bidirectionally exchange computable information between VA and DoD in real-time. The following systems are in place to support this exchange of clinical information.

- Federal Health Information Exchange (FHIE): is the one-way transfer of separated service member health data from DoD to VA.
- Bi-Directional Health Information Exchange (BHIE): supports functional interoperability between VA and DoD through the exchange of textual patient health information such as provider notes, non-computable test results, discharge summaries for all service member/veterans known as active dual consumers.
- Clinical Health Data Repository (CHDR): utilizes established data standards, and terminology services to enable exchange of standardized and computable health record data between VA and DoD.
- Laboratory Data Systems Interchange (LDSI): supports the lab reference model by providing an interoperable interagency application for lab order entry and results reporting.
- Imaging Pilots and Demonstrations: demonstrate the most efficient approaches to the transmission of medical images and clinically relevant documentation.

Effectiveness of Selected Clinical Information Exchange Systems:

The FHIE system has supported the transfer of more than 187 million pieces of discharge related health information on over 3.8 million patients who have separated from the military. FHIE continues to exchange health record data for separated service members.

BHIE is currently the bidirectional medical exchange interface having transferred information for over 2.3 million unique patients who are active dual consumers of both healthcare systems. Currently, VA and DoD are bidirectionally sharing viewable outpatient pharmacy data, anatomic pathology/surgical reports, cytology results, microbiology results, chemistry and hematology laboratory results, laboratory order information, radiology text reports, food and drug allergy information, and discharge summaries from several DoD sites running CIS. The Information through the BHIE interface flows to and from the following systems: VA's 128 VistA Systems and DoD's Composite Health Care System (CHCS), Clinical Data Record (CDR), AHLTA Share, CIS, and Theater Medical Data Store systems. There are plans to expand the amount of clinical data exchanged through BHIE. Encounter notes, patient focused problem lists such as on going treatment for diabetes or hypertension, procedures, and theater level inpatient & outpatient notes will be available by December 2007. By September 2008, VA and DoD improvements will include the addition of a polytrauma Marker and OEF/OIF Combat Veterans Identifier, Electronic Patient Handoff indicators, a DoD Scanning Interface, the Interagency Sharing of Essential Health Images, Provider Notes, Theater Data, Vital Signs, and Patient Histories. Site specific information regarding the volume of data passed through BHIE through September 2007 can be found at the end of this testimony.

CHDR is the clinical data exchange interface that supports the exchange of standardized and computable data that can be used to support automated clinical decision support tools such as drug/drug and drug/allergy order checking. Currently CHDR data is viewable at all VA sites and several DoD sites. In addition, VA drug-drug and drug-allergy order checks are performed based on data from all VA systems and data from CHDR. User interface applications leveraging the BHIE interface often require the clinicians to look in several locations to retrieve health record information from other points of care. This often requires the clinician to interpolate based on approximation when comparing data elements due to the use of different terminologies. By comparison clinical information obtained through the CHDR interface can be incorporated into the same clinical view, automated computations, and edits allowing the user to readily compare like data. The CHDR interface currently supports the movement of pharmacy and medication allergy data and will be upgraded to include laboratory Chemistry and Hematology data in the fourth quarter of FY 2008.

The Veterans Tracking Application (VTA) is the VA's interface to DoD's Joint Patient Tracking Application (JPTA) and supports the passage of information related to the location of wounded, injured or ill service members being transferred from theater to Military Treatment Facilities in the Continental United States (CONUS), who may be transitioning to the VA. VTA is a critical tool used to support the benefit claims and seamless transition processes.

The El Paso Clinical Imaging Demonstration leverages the existing BHIE framework to exchange clinical images, descriptive data and reports between the VA and DoD facilities. As a result of this demonstration, six sites have been selected for installation and testing of the El Paso Imaging prototype are (in order of installation): Great Lakes/North Chicago, Evans Army Community Hospital/Eastern Colorado Health Care System, Landstuhl Regional Medical Center, National Capital Area (Walter Reed Army Medical Center, National Naval Medical Center, Washington

DC VA), VA Polytrauma Centers at Richmond and Tampa, Keesler Medical Center/ VA Gulf Coast Health Care System.

In general, the volume of medical information that is being exchanged is growing at a substantial rate. Every effort is being made to meet the standard of "essential" data referenced in the report of the President's Commission on America's Returning Wounded Warriors.

As it relates to achieving the stated objectives of the projects referenced above, the impact of senior leadership in driving the two organizations in the right direction can not be understated. The Joint Executive Committee (JEC) has been a driving force in setting the long term direction toward true electronic health record and veteran benefits data interoperability. The addition of the Senior Oversight Committee (SOC), the Overarching Integrated Project Team (OIPT) and Lines of Action (LOA) sub-committees have sharpened the focus and intensity of leadership engagement, expanded leadership engagement to include Under Secretaries and top-level General and Flag Officers, and elevated the topic to the level of the Deputy Secretaries of both Departments, intended to achieve results by addressing cross-organizational issues and dependencies related to returning wounded service members and veterans.

The Role of Puget Sound Health Care System and Madigan Army Medical Center, the Great Lakes Federal Health Care System, and other sites in testing and supporting critical data exchange:

Sharing agreements such as the one developed in Tacoma, Washington, between the Puget Sound Health Care System and Madigan Army Medical Center (aka Team Puget Sound) demonstrate new capabilities and functions within products such as BHIE and CHDR. In the Seattle/Tacoma region the two sites are leveraging the BHIE interface in support of inpatient services provided to VA at Madigan Army Medical Center. The primary focus is the exchange of discharge summaries and other clinically relevant inpatient notes. Through these efforts new functionality can be fully tested and incorporated into future national releases.

While collaborations such as the one in the northwest tend to focus on specific functionality in support of limited sharing agreements, the Great Lakes Federal Health Care Center will eventually push the concepts of medical and administrative data sharing too its limits. The goal in Federal Health Care Center is to fully integrate the clinical and administrative functions between two health care systems. Planning activities are underway to develop the local project team required to manage the information technology requirements needed to support the new organization. Initial activities include the preparation of an integrated project schedule reflecting the expected delivery of local and national capabilities so that the gaps can be evaluated and resolved. Additionally, an enterprise-level team of resources is being assembled to resolve technical and operational issues that are beyond the local team's ability to address. The new Great Lakes System will exercise every element of both clinical and administrative operations; a planned and deliberate approach must be taken to ensure that the business goals are met. There are certainly advances in the application of information technology that can be applied, however, the process is complex and must be driven by key business decisions and not by IT.

I would like to thank you Mr. Chairman for giving me the opportunity to testify about the progress being made in clinical information sharing between VA and DoD and I will gladly take any questions at this point.

BHIE Statistics (as of 25 September 07)

MTF	Number of cor-related Patients	Number of new patients*	MTF	Number of cor-related Patients	Number of new patients*
Tripler AMC	179,304	52,064	NACC Groton	78,321	33,833
Womack AMC	129,737	41,541	MacDill	70,025	40,028
Leonard Wood ACH	112,676	31,876	NCA	316,981	121,345
Irwin ACH	42,079	13,543	NH Camp Lejeune	136,008	40,672
Eisenhower AMC	246,781	96,654	Wright-Patterson	101,188	47,201
Martin ACH	139,410	39,402	Wm Beaumont AMC	124,275	6,199

BHIE Statistics (as of 25 September 07)—Continued

MTF	Number of correlated Patients	Number of new patients*	MTF	Number of correlated Patients	Number of new patients*
Fox AHC	25,061	10,753	NH Corpus Christi	39,399	19,202
Wilford Hall MC	601,170	227,103	Madigan AMC	201,519	63,392
Darnall ACH	135,239	40,465	Landstuhl RMC	436,716	100,922
Elmendorf	40,717	13,153	NMC Portsmouth	303,976	97,422
Keesler	171,436	70,101	NH Pensacola	112,551	40,413
O'Callaghan FH	75,777	22,619	NH Great Lakes	134,931	36,955
Kirtland	77,066	55,796	NH Jacksonville	135,111	54,682
Lyster AHC	30,868	12,355	NMC San Diego	243,934	60,644
Bassett ACH	22,357	5,711	NH Lemoore	23,752	8,711
David Grant MC	150,067	68,902	NH Charleston	119,450	36,356
Evans ACH	107,596	40,602	NH Camp Pendleton	165,589	49,444
Total # of Unique Patients**		2,386,625			1,033,658

*Patients not in the FHIE Domain.
**Columns do not add to the total, since patients have been seen at multiple facilities.

Prepared Statement of Lieutenant Commander James Lawrence Martin, Regional Information Systems Officer, Navy Medicine East, Medical Service Corps, Department of the Navy, U.S. Department of Defense

Mr. Chairman and Members of this distinguished Subcommittee, thank you for inviting me to be here today. I am LCDR James L. Martin and I serve as the Regional Information Systems Officer, Navy Medicine East.

Thank you for this opportunity to talk about my personal involvement in the design and implementation of the Composite Healthcare System (CHCS), CHCS II, AHLTA and the Electronic Medical Record Sharing between the Department of Defense and the Department of Veterans Affairs.

Status of Electronic Medical Record Sharing Naval Health Clinic Great Lakes

The present method of sharing electronic medical information at Naval Health Clinic, Great Lakes, is through the Bi-Directional Health Information Exchange (BHIE) and the Clinical Data Repository/Health Data Repository (CHDR). The Veterans Affairs providers are granted read only access to the Department of Defense (DoD) Composite Health Care System (CHCS) and AHLTA. The Department of Defense (DoD) Providers are granted read and write privileges to the Veterans Affairs Computerized Patient Record System (CPRS) which resides on the Veterans Health Information Systems and Technology Architecture (VistA).

Specifically, access to the Composite Health Care System, AHLTA and the Computerized Patient Record System in North Chicago is achieved through a single end user device with icons on the desk top representing each of these applications. This allows for seamless patient flow from the Recruit Processing Center Clinic at Recruit Training Center, Great Lakes to the Emergency Room and Inpatient Facility at North Chicago Veterans Affairs Medical Center. Laboratory Data Sharing Interoperability (LDSI) is used to share Laboratory information between these two systems. The combination of these methods listed above allows complete sharing of all Clinical Information between the Veterans Affairs and Department of Defense Providers.

Regional Information Systems Officer Involvement in this Process

My personal involvement in this process dates back to 1992 when I assisted in the design and implementation of the Infrastructure and End User Device placement in support of Composite Health Care System (CHCS Legacy) while serving as Assistant Department Head, Naval Medical Information Management Center, Be-

thesda. My involvement included personally visiting each Naval Healthcare Treatment Facility prior to and during system implementation.

Thereafter, my role expanded in 1994 as the Head, Management Information Department, Naval Hospital Pensacola, where I managed the Composite Health Care System Host Site for the Hospital and its remote facilities. In 1997, while serving as the TRICARE Region II Regional Information Systems Officer, Naval Medical Center Portsmouth, one of our Commands was selected to be the Test Site for Composite Health Care System II, the predecessor to AHLTA. From 2000 to 2004, I was the Information Systems Officer at Naval Medical Center Portsmouth overseeing the testing and implementation of the Composite Health Care System II. It was during this tour that Naval Medical Center Portsmouth first populated the Clinical Data Repository (CDR) with a 25 month data pull from Composite Health Care System (Legacy CHCS) placing demographic information and Laboratory, Pharmacy and Radiology results in the Clinical Data Repository. From 2004 until 2006 I served as the Medical Liaison Officer, Space and Naval Warfare Systems Center, Norfolk, where I was in charge of the design and testing of the Theater Medical Information Program-Maritime (TMIP–M) the Navy Operational Version of Composite Health Care System II and AHLTA designated CHCS II–T and AHLTA–T.

Currently, as the Regional Information Systems Officer for Navy Medicine East, I oversee all Information Management and Technology for the Navy Military Healthcare Facilities that fall under Navy Medicine East. Naval Health Clinic Great Lakes is one of these Commands.

I have made five site visits in direct support of the DoD/VA initiative at Great Lakes. During these visits I have surveyed the existing facilities and assisted in planning of the relocation of the IM/IT equipment to its new location at the Federal Healthcare Clinic. I attend biweekly conference calls and engineering support meetings where the design and layout of the actual IM/IT spaces is discussed.

The other Commands under Navy Medicine East that I am presently assisting with DoD/VA IM/IT initiatives include Naval Health Clinic Charleston, Naval Hospital Pensacola, Naval Hospital Jacksonville and Naval Medical Center Portsmouth. I am also a member of the National Information Management and Technology Task Group for the Department of Defense and Department of Veterans Affairs Electronic Health Information Sharing Initiative. My responsibility as a member of this task force is to plan and oversee the acquisition and implementation of information systems that integrate VA and DoD health care processes at the North Chicago Federal Healthcare Clinic.

Future Activities

Our goal is to have an interoperable information system that supports clinical and business operations by June 2010. We plan to create a single (main) computer room and a single (main) telecommunications room. Additionally, an Information Management and Information Technology Network Trust between DoD and VA must be established, along with domain ownership and a single electronic email system.

We are presently gathering requirements from the functional users so that the determination can be made on whether a combination of information systems or a new information system is required to meet the functional user requirements. The ultimate goal is to have a single point of entry to support the missions of both DoD and VA patient populations. At present, this goal is met by providing access to CHCS, AHLTA and CPRS using multiple icons on a single end user device.

In addition to the goal of a single point of entry we are also working on the consolidation of IM/IT systems for all of the functional areas in the Federal Healthcare Clinic. This involves managing the development of functional requirements, assisting with local site integration efforts, assisting with enterprise solutions and communicating the status.

Conclusion

I would like to conclude by saying that one of our top priorities is to continue finding ways for Electronic Medical Data Sharing between DoD and VA.

Mr. Chairman, Committee Members, thank you again for this opportunity to speak about our efforts. At this time I would be pleased to answer any questions you may have.

Prepared Statement of Colonel Gregory Andre Marinkovich, M.D., Data Management Product Line Functional Manager, Clinical Information Technology Program Office, Military Health System, Medical Services Corps, Department of the Army, U.S. Department of Defense

Introduction

Mr. Chairman and Members of this distinguished Subcommittee, thank you for inviting me to be here today. I am COL Gregory Andre Marinkovich and I serve as the Data Management Product Line Functional Manager in the Clinical Information Technology Program Office within the Military Health System (MHS). Thank you for this opportunity to talk about the military's electronic health record, AHLTA, and the strides we are making in sharing information between the Department of Defense and the Department of Veterans Affairs.

Historical Overview

AHLTA, an enterprise-wide medical and dental outpatient clinical information system, is the military's current outpatient Electronic Health Record (EHR). It generates, stores, and provides secure online access to lifelong patient healthcare records for more than 9.1 million MHS beneficiaries seen in military treatment facilities. AHLTA ensures the continuity of the Department's health information and patient-centered healthcare delivery with worldwide accessibility anytime, anywhere.

Worldwide deployment of AHLTA, which began January 2004, was successfully completed to all DoD military treatment facilities worldwide in November 2006. Implementation support activities spanned 11 time zones and included training for over 55,000 users, to include more than 18,000 health care providers. Current AHLTA functionality includes encounter documentation, order entry/results retrieval, encounter coding support, alerts and reminders, role-based security, health data dictionary, master patient index, and ad hoc query capability.

Current Activities

AHLTA use continues to grow at a significant pace.

- To date, AHLTA has processed over 45 million outpatient encounters.
- AHLTA is currently processing approximately 112,000 outpatient encounters per workday.

DoD and VA also are taking the first steps toward a joint electronic health record system. A contract to assess VA's and DoD's business and clinical processes, design features, and system constraints relevant to the inpatient component of an electronic health record has been awarded. This assessment will determine and describe, in narrative and graphic format, the scope and elements of a joint inpatient electronic health record and identify those clinical and business capabilities and applications that interact with the joint inpatient electronic health record. An analysis of alternatives will then be conducted to develop a recommendation for the best technical approach. We will implement the solution in a manner that builds in data interoperability.

Future Activities

Based on feedback from several AHLTA user conferences, we are making changes to the next version that will be more provider-friendly. This is scheduled to be released in December 2007. Enhancements that are scheduled to begin deployment in December 2007 will include the ability for patients to provide their signatures electronically for medical forms, and multi-site user account access, which will enable "mobile" providers to use AHLTA from multiple locations.

Looking ahead to 2008, we plan to begin worldwide deployment of dental charting and documentation, and eyeglass ordering and management.

Conclusion

I would like to conclude by saying that one of our top priorities is to continue finding ways for AHLTA to seamlessly transfer information between DoD and VA, thereby ensuring continuity of quality care for returning wounded warriors. With your support, we will continue building on our achievements in sharing electronic health information in support of the men and women who serve and have served this country.

Mr. Chairman, Committee Members, thank you again for this opportunity to speak about our efforts. At this time I would be pleased to answer any questions you may have.

Prepared Statement of Gerald M. Cross, M.D., FAAFP, Principal Deputy Under Secretary for Health, Veterans Health Administration, U.S. Department of Veterans Affairs

Mr. Chairman, Madame Ranking Member Brown-Waite and Members of the Subcommittee, thank you for providing the opportunity to report the progress made by the Department of Veterans Affairs (VA) to share electronic medical records with the Department of Defense (DOD). We have made progress toward developing secure, interoperable electronic medical record systems and I am here today to discuss the current status of our efforts and the work that is underway to achieve electronic health record interoperability.

Overview

Today, VA and DOD are sharing electronic health data bidirectionally to support the care of shared patients. Additionally, VA and DOD are sharing more data than ever before on our seriously wounded service members and veterans who are transitioning from military facilities to VA facilities and polytrauma centers. The availability of these data to VA and DOD providers enhances our ability to provide world class care to veterans, active duty service members receiving care from both systems, and to our wounded warriors returning from theaters of operation in Iraq and Afghanistan. Ensuring that we have accurate, comprehensive and timely medical data to treat our Nation's heroes remains a top priority of this department.

In recent months, we have built upon our earlier successful development of one-way and bidirectional exchanges of text and computable data. Today, VA providers are able to access more electronic inpatient data from DOD than ever before. DOD also has a study underway, funded by VA and DOD, to examine our development of a joint inpatient electronic health record with DOD. Additionally, for the first time, VA has access to critical medical electronic data from current theater of operations, to treat wounded warriors coming to our facilities. The challenges of sharing large amounts of data from disparate electronic systems remain complex. Our processes are not perfect, and I will discuss that below. However, we are working to provide as much electronic data as possible as quickly as possible in support of our returning warriors and shared patient populations. We are now sharing data from multiple settings, including outpatient, inpatient, and theater, as well as tracking information to improve our case management and coordination. These accomplishments reaffirm our commitment to develop interoperable electronic health records with DOD. Moreover, we believe our current capabilities to share electronic medical data demonstrate progress toward our goal.

Active Joint Governance

VA and DOD efforts to achieve interoperability are jointly governed at the highest levels of our departments. Our VA Acting Secretary and the Under Secretary of Defense for Personnel and Readiness continue to cochair the DOD/VA Joint Executive Council (JEC). The JEC provides Executive and overarching leadership of all VA/DOD collaborative activities, including the development of interoperable electronic medical records. Since 2003, VA and DOD have documented these activities in the DOD/VA Joint Strategic Plan (JSP) that is maintained by the JEC. The JSP contains measurable strategic goals, objectives and milestones for our collaborative work with DOD, including electronic medical data sharing. VA and DOD work to update the JSP each year and progress under the JSP is reported to the JEC on a monthly basis. Under the leadership of the JEC and the clear goals contained in the JSP, VA and DOD realized success in meeting JSP health data sharing milestones.

VA's Under Secretary for Health and the DOD Assistant Secretary of Defense for Health Affairs cochair the VA/DOD Health Executive Council (HEC), a Subcommittee of the JEC. The HEC is responsible for coordination of those joint activities related to health care and is committed to ensuring that our ongoing partnership optimizes health delivery to veterans and military beneficiaries. The HEC Information Management and Information Technology Work Group, cochaired by the VHA Chief Information Officer for Health Information Technology Systems and the Military Health System Chief Information Officer, maintains day to day responsibility for health information technology work and, most importantly, for the implementation of our joint electronic health record and data sharing initiatives.

Theater and Inpatient Data Supporting the Seriously Ill and Wounded

At no other time has it been more important for VA and DOD to overcome some of the ongoing complexities of sharing disparate electronic health data. VA and DOD are firmly committed to supporting the seamless care of our injured men and women returning from the battlefield to military facilities and eventually to VA fa-

cilities for longer term care and rehabilitation. Our Nation's heroes deserve nothing less. In cooperation with our sharing partner, our most recent accomplishments to report have focused on the development of electronic solutions to support these seriously ill and wounded patients.

VA and DOD have charted the Senior Oversight Committee (SOC) for the Wounded, and Injured. Co-chaired by the Acting VA Secretary and the DOD Deputy Secretary, the SOC works in conjunction with the JEC to ensure targeted focus on the population of men and women injured in OEF and OIF and now returning for treatment. Underneath the SOC, VA and DOD have organized several Lines of Actions (LOAs), with one LOA specifically focused on data sharing. The purpose of the data sharing LOA is to ensure that appropriate beneficiary and medical information is visible, accessible and understandable by each departments and that available electronic information is shared. Since the formation of the SOC and LOAs, the President's Commission on Care for America's Returning Wounded Warriors (President's Commission) has recommended that VA and DOD share all essential health, administrative and benefit data in viewable format initially, within 12 months. Heeding this recommendation, we have worked with DOD to accelerate and enhance our existing data exchanging to meet this target. Today, VA and DOD are on target to ensure that these essential data which are available electronically will be viewable between the departments by October 2008. Additionally, VA and DOD are now actively developing a plan to establish technology support for the newly formed position of Federal Recovery Coordinator. This Recovery Coordinator will support seriously ill and wounded patients by maintaining on the ground oversight and coordination for all essential clinical and non-clinical aspects of the recovery care plan. We anticipate documenting an information technology plan to support this position by November of this year.

Our most notable achievements demonstrating our commitment to wounded warriors is the sharing of theater and inpatient data. For the first time, DOD medical data captured electronically in the theater of operations are now viewable in text format to any VA provider treating these wounded warriors. We accomplished this in September of 2007 by leveraging an existing bidirectional data exchange. Subsequently, we are implementing a plan that will permit us to share unprecedented amounts of the available inpatient electronic data from DOD. Currently, VA providers are able to view electronic discharge summaries, emergency department notes, and other narrative documents captured during inpatient encounters at 13 major DoD facilities that use the Essentris Clinical Information System (CIS)™. These 13 facilities include the Military Treatment Facilities that are key to supporting returning combat veterans, such as Walter Reed Army Medical Center (Walter Reed) and Bethesda national Naval Medical Center (Bethesda), and have greatly contributed to our ability to provide seamless care to these wounded warriors. This work was accomplished, due in large part, to the innovation of our local clinicians and informatics professionals in the field, at locations such as the Puget Sound VA Healthcare System and Madigan Army Medical Center. Cooperative efforts between VA and DOD are systemic, reaching all the way down to our facilities.

In addition to sharing available electronic documentation, DOD is sending digital radiology images and scanned inpatient paper records that do not originate in electronic format. These capabilities are in place between the key military treatment facilities that receive these patients in the Continental United States (CONUS), (Walter Reed, Bethesda, and Brooke Army Medical Center), and VA polytrauma centers located in Tampa, Richmond, Minneapolis and Palo Alto.

VA and DOD continue to maintain the highly secure and audited direct connection allowing viewing access to the data in the inpatient electronic data systems at Walter Reed and Bethesda by clinicians at the four polytrauma centers. Using these connections allows authorized VA clinicians to view real-time DOD data on wounded service members and combat veterans who are coming to or have transferred to the VA from these DOD facilities. VA and DOD are working to expand our electronic capabilities enterprise wide. We have already successfully demonstrated our capability to leverage bidirectional data exchange to support image sharing with the El Paso pilot. We are now working to expand this pilot to other active sharing locations and are on target to document a plan to share images enterprise wide by March 2008. As is commonly understood, much of the DOD inpatient data is not available electronically. Despite this ongoing challenge, VA and DOD quickly developed these capabilities as interim solutions to support these patients while we work to expand our electronic capabilities. To ensure that we provide full support in the face of these ongoing challenges, VA continues to embed Transition Patient Advocates and social workers at key facilities. At minimum, all pertinent medical records not available electronically are at least copied and transferred with the patient. Our en-

hanced inpatient capabilities support and bolster the seamless transition of these patients. It is our goal that no patient will fall through the cracks.

In January of 2007, VA and DOD announced a study to explore the development of a joint inpatient electronic health record system. Since that time, VA and DOD have actively pursued this initiative. We are now under contract with a prominent and independent third party firm that is conducting the analysis of alternatives. To date, we have made progress by documenting the scope and elements of those joint inpatient data elements that would need electronic support. This work includes conducting comprehensive surveys of industry best practices in this area. We anticipate we will have a final report by July 2008. A common inpatient electronic health record will support the transfer of our most seriously injured patients between DOD facilities and VA facilities as well as broad enterprise-level data sharing between VA and DOD clinicians for all shared patients.

Requirement to Share Psychological Health Data and TBI Data

In order to ensure comprehensive continuation of services, and to better leverage the world-class care that is already available to patients at VA's centers of excellence for Post Traumatic Stress Disorder (PTSD), Traumatic Brain Injuries, and other diagnoses impacting psychological health, it is necessary for VA and DOD to improve routine and appropriate sharing of mental health data. VA has a need to receive these data from DOD.

Sharing of information on mental health conditions and other sensitive matters is important in a number of different contexts. Most simply, they can be divided into areas where the sharing of information is needed to facilitate clinical care of veterans or servicemembers who receive care in both systems, either sequentially or in parallel, and information used for administrative or command purposes.

For clinical purposes, our systems should work toward minimizing barriers for transmittal to the greatest extent possible. Examples of mental health information that would support the VA in serving veterans include records of acute stress disorders, other mental health conditions, and suicidal behaviors, as well as head trauma. Having this information on returning veterans would be important to guide treatment and monitoring plans.

For other purposes, VA, as an agency that functions in the community in parallel to civilian providers of health care, the issues may be more complex. For example, in developing principles about disclosure of information about mental health conditions from VA to DOD, VA must balance its responsibilities as a civilian community health care provider with those as part of a DOD/VA system. Viewed from community standards, it is important to honor patient privacy values, while from the VA/DOD perspective, it is important to provide relevant information to DOD that may have an impact on the efficiency of the fighting force. This issue is being addressed in ongoing discussion within VA.

Ongoing Support for Separated Service Members and Shared Patients

In addition to our accelerated efforts to support our most seriously injured patients, VA and DOD continue the ongoing implementation of our Joint Electronic Health Records Interoperability (JEHRI) plan. The HEC IM/IT Work Group continues to manage the implementation of JEHRI and the maintenance and enhancement of our one-way and bidirectional data exchanges. Today, VA continues to receive all clinically relevant data that are available in DOD's legacy system, the Composite Health Information System (CHCS), on service members separated from active military service. These data are viewable through our shared Federal Health Information Exchange repository by VA clinicians and disability claims staff using VA health and administrative information systems. To date, DOD has transferred electronic health data on over 4 million unique separated service members to VA. Of these individuals, VA has provided care or benefits to the more than 2 million veterans who have sought care or benefits from VA. The data transferred for viewing includes outpatient pharmacy data, allergy information, laboratory results, consults, admission, disposition and transfer information, medical diagnostic coding data, and military pre- and post-deployment health assessment (PPDHA) and reassessment (PDHRA) data on separated and demobilized National Guard and Reserve members. DOD has made almost 2 million of these PPDHA and PDHRA forms available for viewing by VHA clinicians and VBA staff.

In addition to ongoing maintenance of our one-way data exchange, VA and DOD continue to bidirectionally exchange viewable and computable electronic data on shared patients. Currently, VA and DOD are bidirectionally sharing viewable outpatient pharmacy data, anatomic pathology/surgical reports, cytology results, microbiology results, chemistry and hematology laboratory results, laboratory order information, radiology text reports and food and drug allergy information. We also are

maintaining our ongoing exchange of computable allergy and pharmacy data supporting automatic drug-drug and drug-allergy interaction checks at seven locations. The development of this joint capability is complete. The departments are now working together to expand implementation across both enterprises by addressing issues such as user training, site specific issues related to identification and flagging of active dual consumers for whom this capability is in place, and ongoing deployment of department system dependencies related to Health*e*Vet.

As mentioned above, and in keeping with the recommendation of the Presidential Commission, VA and DOD are leveraging our bidirectional exchanges to expand the types of data shared and to share all essential information by October 2008. By December of this year, our providers will have access to viewable encounter notes, problem lists, and procedures from DOD's modern system, AHLTA. By June 2008, we will add vital signs and by October 2008 enterprise wide capability to view scanned documents, such as paper inpatient records. By March 2008, VA and DOD will document a plan to support the enterprise wide bidirectional sharing of digital images. This work will leverage the successful imaging pilot in El Paso and incorporate the work that will soon get underway at expanded pilot locations. By the fourth quarter of 2008, VA and DOD will deploy our computable laboratory capability to support automatic decision support using electronic laboratory result data transferred bidirectionally.

Enhanced Tracking Capability (Veterans Tracking Application)

This month, VA achieved the ability to access patient tracking data enterprise wide using the Veterans Tracking Application (VTA). As reported previously, VTA is a modified version of the DOD developed Joint Patient Tracking Application (JPTA). Our facility based liaisons, such as case managers, can now access VTA from VistA Web to assist with the coordination of care for patients treated at both VHA and DOD. This coordination includes the tracking of these patients as service members move from the battlefield through Landstuhl, Germany, to stateside military treatment facilities and into our VA polytrauma and medical centers. VTA is completely compatible with JPTA allowing overnight electronic transfer of critical tracking data on medically evacuated patients.

Previously, we testified that our JPTA/VTA interface would support the transfer of medical data from the theater. DOD's recent successful efforts to consolidate theater clinical data and to make it viewable to VA through our bidirectional data exchange overcame that effort. As mentioned above, VA clinicians access clinical data, including theater clinical data, through the Bidirectional Health Information Exchange. Our JPTA/VTA interface now supports the provision of viewable tracking data. The VTA database of seriously injured OEF/OIF service members and veterans is used as the authoritative source for the movement of theater patients and supports and documents contacts with veterans and service members. VTA is now a critical tool in the support of our seamless case management of patients. VTA also continues to support the benefit claims process and consolidates data from across all major components, DOD, VHA and VBA into a veteran centric record enhancing our case management capabilities.

Ongoing Collaboration and Dependence on Standards

VA and DOD' continue to work closely with the Department of Health and Human Services (HHS) and other partners on national efforts to align our groundbreaking work on data exchanges with the nationwide effort to support health interoperability. These efforts are led by the HHS National Coordinator for Health Information Technology and will include ongoing efforts to identify mature standards, study infrastructure interoperability, and work closely with commercial healthcare providers to foster a global interoperability infrastructure.

The President's Commission recognized the complexity of achieving full data interoperability and tailored its recommendation to initially share data in viewable format versus computable format. Mature standards are necessary and evolved technologies are critical dependencies to the seamless exchange of all data. As these health data and communication standards mature and are identified, we will adopt and implement the standards into the systems we are modernizing. VA and DOD continue to play a leadership role in these efforts. Our VA/DOD Health Architecture Interagency Group continues to participate in and contribute to standards related organizations such as Healthcare Information Technology Standards Panel (HITSP) and Health Level 7(HL7) to improve the availability of shared health information. Current efforts are focused on areas such as case management and disability evaluation.

Conclusion

VA and DOD have achieved progress toward sharing all available electronic data and remain committed to efforts that will help us to reach our final goal. Under the leadership of the JEC and the HEC, we are marching forward to implement enhancements to existing data exchanges while identifying attainable opportunities to support our most seriously ill and wounded warriors and combat veterans. We assure you that we continue to work toward a long-term strategy that will support full enterprise wide electronic data interoperability. Never before have we been able to access data from the theater and provide care to our veterans and rehabilitating service members using the amount of inpatient data currently available from DOD. Our efforts are subject to tremendous interest by the President and Congress, and we are working hard to ensure that recommendations coming from bodies such as the President's Commission, the Task Force on the Returning Global War on Terror Heroes, chaired by our own Acting Secretary, and the Veterans Disability Benefits Commission, are evaluated and incorporated, where feasible, to ensure we form a complete and comprehensive approach to sharing health data in support of our veterans and service members

To continue our successes, we ask for your continued support as we each work to modernize and update our existing technologies. VA has been recognized many times over for the world-class care it provides to veterans. Our electronic health record is second to none in its fully integrated electronic capabilities across all settings of care. More work is needed to update our world-class system and to ensure that it uses state of the art technologies and tools that will better support data interoperability. Thank you for the opportunity to appear before you and provide you the status of our ongoing efforts. My colleagues and I are happy to answer any questions you or other Members of the Subcommittee might have.

VA/DoD Interoperability Acronyms

Health Care Delivery Systems

AHLTA—Armed Forces Health Longitudinal Technology Application—DoD's next generation Electronic Record System—formerly CHCS II

CHCS—Composite Health Care System—DoD legacy system housing order entry/labs/radiology/allergy/meds, largely used for ambulatory care

CIS—Clinical Information System (new name is Essentris Clinicomp)—DoD's standalone inpatient system installed in most major military treatment facilities.

CPRS—Computerized Patient Record System

HealtheVet—Next generation of VistA based on computable data

JPTA—DoD's Joint Patient Tracking Application

TMDS—DoD's Theater Medical Data Store

VistA—Veterans Health Information Systems and Technology Architecture

VistA Web—The VistA web-based application for viewing remote data (VA and DoD)

VTA—Veterans Tracking Application

Other

TPA—Transition Patient Advocates

Health Care Exchange Systems

BHIE—Bidirectional Health Information Exchange

CHDR—Clinical Data Repository/Health Data Repository (Interoperability Project)

FHIE—Federal Health Information Exchange (formerly GCPR)

Groups/Organizations/Plans

AHIC—American Health Information Community

CHI—Consolidated Health Informatics

BEC—DoD/VA Benefits Executive Council

HEC—DoD/VA Health Executive Council

JEC—DoD/VA Joint Executive Council

JEHRI—DoD/VA Joint Electronic Health Records Interoperability

JSP—Joint Strategic Plan

LOA—Line of Action

MTF—Military Treatment Facilities

ONCHIT—Office of the National Coordinator for Health Information Technology

SOC—Senior Oversight Committee

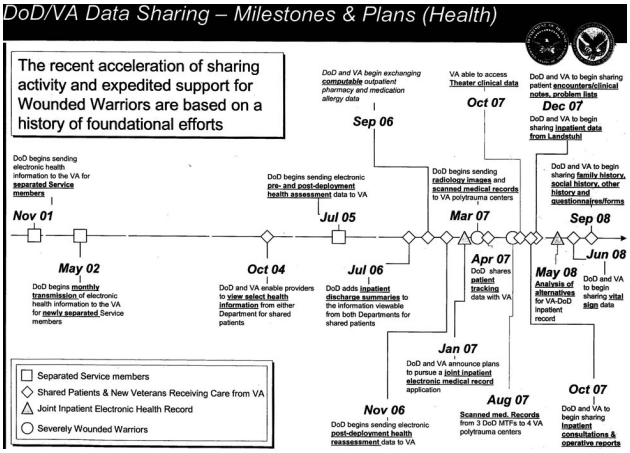

Prepared Statement of Stephen L. Jones, DHA, Principal Deputy Assistant Secretary of Defense (Health Affairs), U.S. Department of Defense

INTRODUCTION

Mr. Chairman and members of this distinguished Subcommittee, thank you for inviting me to discuss the sharing of electronic health information between the Department of Defense (DoD) and Department of Veterans Affairs (VA). We are making great strides in sharing electronic health information, but we have more to do.

Cooperation between DoD and VA in the area of health information sharing is vital for effective management and efficient delivery of programs and benefits that our Nation's Veterans and Service members deserve. DoD recognizes Congressional concerns regarding the time it has taken the two Departments to establish the current level of interoperability. Let me assure you that DoD and VA share the ultimate goals of this and other Congressional bodies seeking to address the needs of the Nation's heroes. We have been working together in earnest and have made significant progress in sharing electronic health information since our first efforts in 2001. In particular, I would like to highlight current sharing activities, recent accomplishments, and some of what we hope to accomplish going forward.

HISTORICAL OVERVIEW

DoD and VA began sharing electronic health information in 2001 and have continually enhanced and expanded the types of information we share as well as the ways in which we share the information. At times it has not been an easy road, and there is always room for improvement in an effort as large and as crucial as this one. Nonetheless, DoD and VA have come a long way in the areas of health information technology, interoperability standards, and health information sharing. By working together at the top levels of DoD and VA, we have established policies that enable each Department to address its unique requirements while also addressing requirements that we share.

CURRENT ACTIVITIES

Continuity of Care for Shared Patients. For patients treated at both VA and DoD facilities, providers can view electronic health data from both Departments. By the end of 2007, all essential health data will be, in the words of the President's Commission on Care for America's Returning Wounded Warriors, "immediately viewable by any clinician, allied health professional, or program administrator who needs it" at a DoD or VA facility. Health data currently accessible by DoD and VA providers includes allergy information, outpatient medications, inpatient and outpatient laboratory results, radiology reports, demographic details to identify the patient, Pre- and Post-Deployment Health Assessments, and Post-Deployment Health Reassessments. To that list we can now add, as of earlier this month, vital clinical

data captured in the Theater of operations, including inpatient notes, outpatient encounters, and ancillary clinical data, such as pharmacy data, allergies, laboratory results, and radiology reports. This development is a significant accomplishment in our efforts to enhance the continuity of care for Service members returning from Iraq, Afghanistan, Kuwait, and other forward locations. Other recent developments include expanding our efforts to share inpatient information electronically. Specifically, over the past several months we have expanded the sharing of electronic discharge summaries to include the 13 DoD facilities with the greatest inpatient volume. Previously only five DoD facilities had been capable of sharing discharge summaries. This capability will be extended to include Landstuhl Regional Medical Center in 2008. As the primary receiving location for patients coming out of Theater, Landstuhl is a critical link in the electronic health information chain.

By December 2007, we will be sharing encounters and clinical notes, procedures, problem lists, inpatient consultations, and operative reports, further enhancing continuity of care for our shared patients. In 2008, we will add vital signs, family history, social history, other history, and questionnaires and forms.

Drug-Drug and Drug-Allergy Interaction Checking. Outpatient pharmacy and drug allergy data are now available in a standardized format for patients receiving treatment from both DoD and VA. This standardization enables our information systems to run vital safety checks. Drug-drug interaction and drug-allergy checks can now be run using data from both Departments, further enhancing patient safety. Currently, this capability is operational in the following seven locations:

- William Beaumont Army Medical Center/El Paso VA Health Care System;
- Eisenhower Army Medical Center/Augusta VA Medical Center;
- Naval Hospital Pensacola/VA Gulf Coast Health Care System;
- Madigan Army Medical Center/VA Puget Sound Health Care System;
- Naval Health Clinic Great Lakes/North Chicago VA Medical Center;
- Naval Hospital San Diego/VA San Diego Health Care System; and
- Mike O'Callaghan Federal Hospital and VA Southern Nevada Health Care System.

For this capability to work properly, the individual must have a record in the Defense Manpower Data Center/Defense Enrollment and Eligibility Reporting System (DEERS)—DoD's "gold standard" for person identification. More than 6 million veterans, primarily those who separated from Service prior to the establishment of DEERS, were recently added to the DEERS database. With that completed, we are now ready for all DoD sites to implement this data sharing initiative. Even now however, all DoD and VA facilities—not just those listed above—have access to the shared DoD and VA pharmacy and allergy data for a patient if that patient should present to their facility for care.

Continuity of Care for Polytrauma Patients (Wounded Warriors). Earlier this year, in response to the urgent need for VA providers at Polytrauma Centers to have as much information as possible on inpatients transferring to their care, DoD began sending electronic health information directly to the Polytrauma Centers. When providers determine that a severely wounded, injured, or ill patient should be transferred to a VA Polytrauma Center for care, DoD sends radiology images and scanned paper medical records electronically to the receiving facility. This effort began in March 2007 with a pilot project, sharing information from one DoD facility to one VA Polytrauma Center, and quickly expanded to include the three primary DoD facilities treating incoming severely wounded warriors—Walter Reed Army Medical Center, National Naval Medical Center, and Brooke Army Medical Center—and the four level 1 VA Polytrauma Centers—Tampa, Richmond, Palo Alto, and Minneapolis.

Separated Servicemembers (Potential VA Patients). More than 4 million former Service members eligible for VA health care now have electronic health information accessible to their new provider should they seek care at a VA facility. In 2001, DoD transmitted electronic health information for Service members who had separated since 1989. Monthly transfers of health information for newly separated Service members began in 2002 and continue today. Electronic health information available to VA providers includes the following data elements:

- Outpatient pharmacy data, laboratory and radiology results;
- Inpatient laboratory and radiology results;
- Allergy data;
- Consult reports;
- Admission, disposition, transfer data;

- Standard ambulatory data record elements (including diagnosis and treating physician);
- Pre- and post-deployment health assessments; and
- Post-deployment health reassessments.

When the former Service member presents to VA for care or evaluation, the VA provider can access this information from within the VA electronic medical record.

Business Practice Coordination. DoD and VA have extended the sharing concept to include coordination of business practices. For example, the Laboratory Data Sharing Initiative (LDSI) established bidirectional electronic exchange of laboratory chemistry orders and results when one Department's lab acts as a reference lab for the other. In other words, when it will speed the process of getting a lab result, DoD can send a test to a VA lab for processing or VA can send a test to a DoD lab. The end result is expedited testing and results, enhancing the quality of care for our patients. Expanding the LDSI capability, DoD and VA have added laboratory anatomic pathology and microbiology orders and results retrieval. This enhanced functionality became operational at Brooke Army Medical Center and VA South Texas Health Care System in May 2007. The LDSI capability can be expanded to include other sites should they demonstrate that the capability would enhance quality of care and make sense from a business perspective.

DoD and VA are also exploring other opportunities for coordinating business practices to support Veterans and Service members and their families. These opportunities include an eHealth portal to improve accessibility of information for patients and expanded image sharing. In both cases, DoD and VA will explore opportunities in search of the best ways to coordinate business practices to achieve the greatest benefit for the patients we serve.

DoD's Electronic Health Record Meets Unique Needs. Sharing electronic health information with VA is just one function of the DoD electronic health record. DoD has many unique requirements that have shaped the development of its electronic health record system.

Theater. To track health care most effectively in Theater, a flexible, mobile, and highly scalable electronic information system is necessary. DoD's electronic health record operates on the full spectrum of hardware, according to what is available or practical in a given location or situation. DoD providers at fixed facilities—what most of us think of as hospitals—can use desktop computers. Providers at Combat Support Hospitals—sometimes nothing more than tents in the desert—use laptops that can operate in a standalone mode or as part of a small network. Medics in the field can use handheld devices that are later synched with a laptop or desktop to add valuable information to the patient's electronic health record. DoD's electronic health record, on all platforms, is designed to collect highly structured medical data, enabling us to identify potential natural disease outbreaks and chemical or biological attacks much faster than ever before in Theater. DoD's Theater health care mission also necessitates that an electronic health record system be operational in situations and places where external communications are often sporadic or unreliable. Additionally, because health care information from Theater supports command and control efforts, our electronic health record system needs to fit within the greater DoD information technology infrastructure.

One System in Garrison and Theater. When our providers deploy, they must be provided with familiar tools to maximize their readiness. Therefore, we need to use one electronic health record system in garrison and in Theater. Multiple systems could delay deployment of health care providers as they learn the "Theater" system or could negatively affect the quality of care in Theater as providers use a system with which they are either unfamiliar or less familiar.

Our Beneficiary Population. DoD's beneficiaries include millions of people who relocate every few years. To maintain accurate and complete electronic health records for such a mobile population requires a centralized clinical data repository. As DoD providers and patients alike move from one part of the country to another, or from one end of the world to another, they benefit from a system that maintains complete records with information from more than 60 major hospitals and medical centers and more than 400 clinics in a single, electronic health record—accessible from DoD facilities around the globe.

JOINT INPATIENT ELECTRONIC HEALTH RECORD

DoD and VA have developed or acquired separate outpatient electronic health record systems to meet unique needs. For inpatient care, however, the Departments are exploring the possibility of a joint electronic health record solution. The timing for examining this potentially ground-breaking effort is right, as both Departments

currently plan to modernize, upgrade, or integrate inpatient records with their outpatient electronic health records and must find an interoperable solution. A joint inpatient solution that meets the needs of both Departments could further enhance continuity of care, better meet requirements for joint facilities, and leverage economies of scale in terms of development and integration costs, license fees, and hardware purchases.

We have taken the first steps in this effort to examine the potential for a joint system by working closely to award a contract to assess VA's and DoD's business and clinical processes, design features, and system constraints relevant to the inpatient component of an electronic health record. This assessment will determine and describe, in narrative and graphic format, the scope and elements of a joint inpatient electronic health record and identify those clinical and business capabilities and applications that interact with the joint inpatient electronic health record. An analysis of alternatives will then be conducted to develop a recommendation for the best technical approach. We will implement the solution in a manner that builds data interoperability in as a fundamental precept. Our goal is for a solution to address the information needs of the end users in all inpatient care venues from the forward surgical units in Theater to the domiciliary care facilities in VA. A joint solution could provide users with all essential inpatient data—regardless of where in DoD or VA that data was acquired—as the patient moves through the continuum of care from Theater to home again. The requirements analysis will be complete in 2008, after which we will establish an acquisition or development timeline based on the assessment of alternatives.

INTENSIFIED FOCUS ON WOUNDED WARRIORS

In the words of Secretary Gates, "Apart from the war itself, this department and I have no higher priority" than taking care of those who have "stepped forward to serve." Over the last several months DoD and VA have accelerated our electronic health information sharing initiatives to support America's heroes. We have received and are responding to the recommendations of various commissions and task forces, including the Independent Review Group, the Department of Veterans Affairs Interagency Task Force on Returning Global War on Terror Heroes, and most recently, the Veterans Disability Benefits Commission. Under the auspices of a Senior Oversight Committee and Overarching Integrated Product Team, I along with Dr. Paul Tibbits have had the privilege of cochairing the team for DoD/VA Data Sharing. Not only are we focusing on sharing health, personnel, and administrative data electronically between DoD and VA, but we are also working with other teams to determine the information technology needed to support reengineered business processes that better support our wounded warriors.

In addition, we are working to implement the recommendations of the President's Commission on Care for America's Returning Wounded Warriors. We will:

- By next July, in order to implement our new Recovery Plans for wounded, make patient data much more accessible—to begin with, in viewable form. All essential health, administrative, and benefits data must be immediately viewable by any clinician, allied health professional, or program administrator who needs it.
- Continue the work under way at present to create a fully interoperable information system that will meet the long-term administrative and clinical needs of all military personnel over time.
- Develop a plan for a user-friendly, tailored, and specific services and benefits portal for service members, veterans, and family members.

Over the next several months, DoD/VA teams will define information technology requirements, enabling the two Departments to begin the work necessary to make all appropriate demographic, personnel, and medical information on Service members, Veterans, and their beneficiaries visible, accessible, and understandable through secure and interoperable information management systems. We will work to provide the information technology needed to care for and track the status of our wounded warriors through their transition to Veteran status. DoD and VA are now working more collaboratively across health and personnel organizational lines than ever before. Our overall goal is to ensure appropriate beneficiary and medical information is visible, accessible, and understandable through secure and interoperable information management systems.

JOINT GOVERNANCE

VA/DoD electronic health information collaboration is a major component of the Departments' Joint Strategic Plan. The goals of the Joint Executive Council are described in the Joint Strategic Plan for Fiscal Years 2007 through 2009 and cover

a full spectrum of VA/DoD health-related sharing. The Under Secretary of Defense for Personnel and Readiness and the VA Deputy Secretary cochair the Joint Executive Council, whose members include senior DoD and VA health managers involved in sharing initiatives. This Council was established in 2002 and now meets quarterly to provide leadership oversight of interdepartmental cooperation at all levels and to oversee the efforts of the Health Executive Council and Benefits Executive Council. The Assistant Secretary of Defense (Health Affairs) and VA Under Secretary for Health cochair the Health Executive Council, which was formed to establish a high-level program of cooperation and coordination in a joint effort to reduce costs and improve health care for all our beneficiaries. The Chief Information Officers of the Military Health System and the VA cochair the Health Executive Council's Information Management/Information Technology workgroup.

NATIONAL STANDARDS ADOPTION AND IMPLEMENTATION

DoD and VA lead the Nation in health information technology, implementation of interoperability standards, and electronic health information sharing. DoD's electronic health record system has been awarded pre-market, conditional certification by the Certification Commission for Healthcare Information Technology, an independent, non-profit organization that sets the benchmark for electronic health record systems. Full certification for DoD's electronic health record system is expected in December 2007 when we begin deploying the next major enhancement. As we implement, acquire, or upgrade health information technology systems used for the direct exchange of health information between agencies and with non-Federal entities, we shall utilize, where available, health information technology systems and products that meet recognized interoperability standards.

DoD and VA will continue to be driving forces in National initiatives such as the American Health Information Community, the Health Information Technology Standards Panel, the Health Information Technology Policy Council, and the Federal Health Architecture. DoD and VA support Executive Order 13410, issued in August 2006, which requires Federal agencies to use recognized health interoperability standards to promote the direct exchange of health information between agencies and with non-federal entities. Because such a significant portion of the American population is eligible for health care through Medicare, DoD, VA, and Federal employee health programs, our efforts can have a dramatic effect on private sector adoption of health information technology and will ultimately affect our ability to exchange electronic health information with private sector providers.

CONCLUSION

Providing the best possible care for America's returning wounded warriors is a top priority for DoD and VA. Electronic health information sharing is unquestionably a key component of enhancing the quality and continuity of the care both Departments deliver. We have made great strides since our initial sharing efforts, building on the foundation established beginning in 2001. We have accelerated our expansion of the types of data shared and methods of sharing in recent months to support urgent needs. In the coming months, we will continue to explore additional projects such as a joint inpatient electronic health record and expanded image sharing.

As always, we appreciate the insights, recommendations, and guidance of this and other Congressional and federal bodies. We are all working toward the same end—to provide the highest quality care for our Nation's heroes, past and present—and we need to work together to achieve our goals as efficiently and effectively as possible. Thank you for allowing me the opportunity to appear before you and to testify about DoD/VA electronic health information sharing achievements, goals, and plans.

Committee on Veterans' Affairs
Subcommittee on Oversight and Investigations
Washington, DC.
February 5, 2008

Honorable David M. Walker
Comptroller General
U.S. Government Accountability Office
441 G St., NW
Washington, DC 20548

Dear Mr. Walker:

On Wednesday, October 24, 2007, the Subcommittee on Oversight and Investigations of the House Committee on Veterans' Affairs held a hearing on the sharing of electronic medical information between the Department of Defense (DoD) and the Department of Veterans Affairs (VA).

During the hearing, the Subcommittee heard testimony from Ms. Valerie Melvin, Director of the Human Capital and Management Information Systems Issues team. Ms. Melvin was accompanied by Ms. Barbara Oliver, Assistant Director for Human Capital and Management Information Systems Issues. As a follow-up to that hearing, the Subcommittee is requesting that the following questions be answered for the record:

1. Since 2001, how many times has the Government Accountability Office reported on the issue of electronic medical records sharing between DoD and VA with recommendations, and how many of the recommendations have been actually implemented by DoD and VA?

We request you provide responses to the Subcommittee no later than close of business, Friday, March 7, 2008.

Sincerely,

HARRY E. MITCHELL
Chairman

GINNY BROWN-WAITE
Ranking Republican Member

U.S. Government Accountability Office
Washington, DC.
March 7, 2008

Hon. Harry E. Mitchell, Chairman
Hon. Ginny Brown-Waite, Ranking Member
Subcommittee on Oversight and Investigations
Committee on Veterans' Affairs
House of Representatives

Subject: *Subcommittee Post-Hearing Question Concerning Efforts by the Departments of Veterans Affairs and Defense to Share Electronic Medical Information*

This letter responds to your request of February 5, 2008, that we provide you with an answer to your question related to our October 24, 2007, testimony.[1] At that hearing, we discussed efforts by the Department of Veterans Affairs (VA) and Department of Defense (DOD) to exchange patient health information. Your question and our response follow.

Since 2001, how many times has the Government Accountability Office reported on the issue of electronic medical records sharing between DOD and VA with recommendations, and how many of the recommendations have been actually implemented by DOD and VA?

Since 2001, we have issued three reports[2] that included recommendations pertaining to DOD's and VA's efforts to electronically share medical information. Our reports highlighted the activities being taken by the departments to electronically exchange health care data as well as management challenges that they have faced in doing so. We pointed out that management weaknesses, such as inadequate accountability and poor planning and oversight, had led to repeated changes in the focus of the departments' initiatives and target completion dates. We determined that the lack of a lead entity, clear mission, and detailed planning made it difficult to monitor the departments' progress, identify project risks, and develop appropriate contingency plans.

---

[1] GAO, *Information Technology: VA and DOD Continue to Expand Sharing of Medical Information, but Still Lack Comprehensive Electronic Medical Records,* GAO–08–207T (Washington, D.C.: Oct. 24, 2007).

[2] GAO, *Computer-Based Patient Records: Better Planning and Oversight by VA, DOD, and IHS Would Enhance Health Data Sharing.* GAO–01–459 (Washington, D.C.: Apr. 30, 2001) and *Veterans Affairs: Sustained Management Attention Is Key to Achieving Information Technology Results,* GAO–02–703 (Washington, D.C.: June 12, 2002) and *Computer-Based Patient Records: VA and DOD Efforts to Exchange Health Data Could Benefit from Improved Planning and Project Management,* GAO–04–687 (Washington, D.C.: June 7, 2004).

As a result of the weaknesses we identified, our reports included a total of eight recommendations to encourage progress in VA's and DOD's efforts to achieve the capability to share information electronically. These recommendations focused on strengthening the management and oversight of the departments' initiatives by establishing a lead entity with final decisionmaking authority, providing Executive-level support, instituting sound project management principles, and agreeing to clear goals, objectives, and performance measures. In addition, we recommended that the departments develop a comprehensive and coordinated project management plan that defines the technical and managerial processes necessary to satisfy project requirements and to guide their activities.

As of October 2007, VA and DOD had fully implemented seven of our recommendations, achieving a measure of success in sharing limited health information electronically. However, the departments had not completed actions on our recommendation to develop a comprehensive coordinated project management plan. The departments provided us with a project management plan that included the exchange of pharmacy data, but had not completed a detailed project management plan to guide their various initiatives to share electronic health information. According to VA, when the plan is completed, it will contain milestones and will further define sharing capabilities to support the long-term ability of VA and DOD to share electronic health data. Without such a detailed plan, VA and DOD increase the risk that the long-term project will not deliver the planned capabilities in the time and at the cost expected. Our recommendations and the departments' actions to address them are summarized in enclosure I.

In addition to the aforementioned reports, since 2001 we have testified 14 times on VA and DOD efforts to electronically share patient health information with each other. Our statements discussed the progress made by the departments in exchanging health information via various long- and short-term initiatives[3] and reiterated actions that the departments needed to take to address our recommendations. We pointed out that the exchanges of health information between VA and DOD have been limited and that significant work remained to fully achieve the goal of exchanging health information seamlessly between the departments. This includes each department's development of its next generation health information system that is critical to delivery of health care to its patients. We also reiterated the need for the departments to develop a comprehensive and coordinated project management plan. Our testimonies are summarized in enclosure II.

In responding to your question, we relied on past work related to our reviews of VA's and DOD's actions since 2001 toward sharing patient health information. We reviewed our prior reports and testimonies on the departments' health information sharing efforts. We conducted this performance audit from February 2008 to March 2008. All work on which this correspondence is based was conducted in accordance with generally accepted government auditing standards.

Should you or your office have any questions on matters discussed in this letter, please contact me at (202) 512–6304 or by e-mail at melvinv@gao.gov. Key contributors to this letter were Barbara Oliver and Eric Trout.

Sincerely yours,

Valerie C. Melvin
Director, Human Capital and
Management Information Systems Issues

[3] The long-term initiative includes the interface between the departments' new repositories (DOD's Clinical Data Repository and VA's Health Data Repository), referred to as CHDR. Two short-term initiatives include a one-way transfer of medical information from DOD to VA on personnel leaving active duty, the Federal Health Information Exchange (FHIE), and a two-way view of medical information in existing systems on shared patients, the Bidirectional Health Information Exchange (BHIE).

Enclosure I: Actions Taken by VA and DOD on GAO Recommendations

Report date/ number	Recommendations to VA and DOD	Actions taken by VA and/or DOD
June 7, 2004 GAO–04–687	Develop an architecture for the electronic interface between their health systems that includes system requirements, design specifications, and software descriptions.	The departments implemented this recommendation. They developed an architecture for the electronic interface that includes major elements required in a complete architecture. For example, it defines system requirements and allows these to be traced to the functional requirements; it includes the design and control specifications for the interface design; and it includes design descriptions for the software.
	Select a lead entity with final decisionmaking authority for their effort to share patient health information.	The departments implemented this recommendation by establishing project accountability and implementing a joint project management structure. Specifically, the Health Executive Council was established as the lead entity for the project.
	Establish a project management structure to provide day-to-day guidance and accountability for their investments in and implementation of the interface capability.	The departments implemented this recommendation. The joint project management structure consists of a Program Manager from VA and a Deputy Program Manager from DOD to provide day-to-day guidance for this initiative. Additionally, the Health Executive Council established the DOD/VA Information Management/ Information Technology Working Group and the DOD/VA Health Architecture Interagency Group, to provide programmatic oversight and to facilitate interagency collaboration on sharing initiatives between DOD and VA.
	Create and implement a comprehensive and coordinated project management plan for the electronic interface that defines the technical and managerial processes necessary to satisfy project requirements and includes (1) the authority and responsibility of each organizational unit; (2) a work breakdown structure for all of the tasks to be performed in developing, testing, and implementing the software, along with schedules associated with the tasks; and (3) a security policy.	The departments took action but have not yet fully implemented this recommendation. The departments provided GAO with a project management plan that included the exchange of pharmacy data, but have not completed a detailed project management plan to guide the long-term efforts to share data. According to VA, when the plan is completed, it will contain milestones and further define sharing capabilities to support the long-term ability of VA and DOD to share electronic health data.

Enclosure I: Actions Taken by VA and DOD on GAO Recommendations—Continued

Report date/ number	Recommendations to VA and DOD	Actions taken by VA and/or DOD
June 12, 2002 GAO–02–703	Revisit the original goals and objectives of the Government Computer-Based Patient Record (GCPR) initiative to determine if they remain valid, and where necessary, revise the goals and objectives to be aligned with the current strategy and direction of the project.	The departments implemented this recommendation. They reevaluated and revised the original goals and objectives of the initiative. A May 3, 2002, memorandum of agreement between VA and DOD established the Federal Health Information Exchange (FHIE) effort. DOD has been using FHIE to transfer information to VA since 2002. According to DOD officials, 194 million clinical messages on more than 4 million veterans had been transferred to the FHIE data repository as of September 2007.
	Commit the Executive support necessary for adequately managing the project, and ensure that sound project management principles are followed in carrying out the initiative.	The departments implemented this recommendation. The departments committed the Executive support necessary for adequately managing the FHIE project. VA committed Executive support for the project by way of monthly updates provided by the FHIE program manager to the VA chief information officer, as well as quarterly updates to the joint VA/DOD Executive Council. They also ensured that project management principles were followed in carrying out the initiative. VA procured and implemented project management software to better track the assignment and status of project tasks and initiatives.
April 30, 2001 GAO–01–459	Direct their health chief information officers to designate a lead entity with final decisionmaking authority and establish a clear line of authority for GCPR.	The departments implemented this recommendation. By July 2002, VA and DOD had finalized a memorandum of agreement designating VA as the lead entity for implementing the program.
	Create comprehensive and coordinated plans to ensure that the agencies can share comprehensive, meaningful, accurate, and secure patient health data. These plans should include an agreed-upon mission and clear goals, objectives, and performance measures, and they should capitalize on existing medical IT capabilities.	The departments implemented this recommendation. By July 2002, VA and DOD had revised their strategy for the initiative into long- and short-term efforts and had made progress toward electronically sharing patient health data. The departments had renamed the short-term portion of their initiative the Federal Health Information Exchange.

Source: GAO.

Enclosure II: GAO Testimony on VA and DOD Sharing of Patient Health Information

Testimony date/ number	Summary of Results
October 24, 2007 GAO–08–207T	Under their long-term initiative, the modern health information systems being developed by each department are to share standardized computable data through an interface between data repositories associated with each system. The repositories have now been developed, and the departments have begun to populate them with limited types of health information. In addition, the interface between the repositories has been implemented at seven VA and DOD sites, allowing computable outpatient pharmacy and drug allergy data to be exchanged. Nevertheless, the departments must still agree to standards for the remaining categories of medical information, populate the data repositories with this information, complete the development of the two modernized health information systems, and transition from their existing systems. Further, the departments have established ad hoc processes to meet the immediate need to provide data on severely wounded service members to VA's polytrauma centers, which specialize in treating such patients. While these multiple initiatives and ad hoc processes have facilitated degrees of data sharing, they nonetheless highlight the need for continued efforts to integrate information systems and automate information exchange. At present, it is not clear how all the initiatives are to be incorporated into an overall strategy focused on achieving the departments' goal of comprehensive, seamless exchange of health information.
September 19, 2007 GAO–07–1246T	VA achieved a milestone in the long-term effort to share electronic health information with DOD, having begun to exchange limited medical data with DOD (at selected sites) through an interface between the data repositories for the modern health information systems that each department is developing. Nevertheless, to achieve their long-term vision, VA and DOD have much work still to do (such as extending the current capability throughout both departments), and the two departments have not yet projected a final completion date for the whole initiative.
July 18, 2007 GAO–07–1108T	VA and DOD have made progress in both their long-term and short-term initiatives to share health information, but much work remains to achieve the goal of a shared electronic medical record and seamless transition between the two departments. In the long-term project to develop modernized health information systems, the departments have begun to implement the first release of the interface between their modernized data repositories, and computable outpatient pharmacy and drug allergy data are being exchanged at seven VA and DOD sites. However, significant work remains including agreeing to standards for the remaining categories of medical information and populating the data repositories with all this information. The two departments have also made progress in their short-term projects to share information in existing systems. Through all these efforts, VA and DOD are achieving exchanges of health information. However, these exchanges are as yet limited, and it is not clear how they are to be integrated into an overall strategy toward achieving the departments' long-term goal of comprehensive, seamless exchange of health information. Consequently, it remains essential for the departments to develop a comprehensive project plan to guide their efforts to completion, in line with our earlier recommendations.
May 8, 2007 GAO–07–852T	In the long-term project to develop modernized health information systems, the departments have begun to implement the first release of the interface between their modernized data repositories, and computable outpatient pharmacy and drug allergy data are being exchanged at seven VA and DOD sites. Although the data being exchanged are limited, implementing this interface is a milestone toward the long-term goal of modernized systems with interoperable electronic medical records. Besides completing the Federal Health Information Exchange (FHIE), the departments have made progress on two demonstration projects. In addition to their technology efforts, the two departments have undertaken ad hoc activities to accelerate the transmission of health information on severely wounded patients from DOD to VA's four polytrauma centers, which care for veterans and service members with disabling injuries to more than one physical region or organ system.

Enclosure II: GAO Testimony on VA and DOD Sharing of Patient Health Information—Continued

Testimony date/ number	Summary of Results
June 22, 2006 GAO–06–905T	VA and DOD are implementing limited, near-term demonstration projects, and they are making progress toward their long-term effort to share electronic patient health data. The Bidirectional Health Information Exchange, implemented at 16 sites, allows the two-way exchange of health information on shared patients in text format. The Laboratory Data Sharing Interface application, implemented at 6 sites, is used to facilitate the electronic transfer/sharing of orders for laboratory work and the results of the work. In their longer term efforts to achieve a virtual medical record, VA and DOD have more to do to achieve the two-way electronic data exchange capability originally envisioned. They have made progress in, for example, preparing data for exchange, and they have implemented three of our four earlier recommendations. However, they have not yet developed a clearly defined project management plan that gives a detailed description of the technical and managerial processes necessary to satisfy project requirements, as we recommended. Moreover, the departments have experienced delays in their efforts to begin exchanging computable patient health data.
September 28, 2005 GAO–05–1051T	VA and DOD had begun to implement applications that exchange limited electronic medical information between the departments' existing health information systems. These applications were developed through two information technology demonstration projects: (1) Bidirectional Health Information Exchange is a project to achieve the two-way exchange of health information on shared patients,[4] and (2) Laboratory Data Sharing Interface is an application used to facilitate the electronic transfer/sharing of orders for laboratory work and the results of the work. Since our last report on the departments' efforts to achieve a virtual medical record, VA and DOD have taken several actions, but the departments continue to be far from achieving the two-way electronic data exchange capability originally envisioned. The departments have implemented three recommendations that we made in June 2004, but have not yet developed a clearly defined project management plan that gives a detailed description of the technical and managerial processes necessary to satisfy project requirements, as we previously recommended. Moreover, the departments have experienced delays in their efforts to begin exchanging computable patient health data; they have not yet fully populated the data repositories that are to store the medical data for their future health systems.
May 19, 2004 GAO–04–811T	VA and DOD are proceeding with actions intended to support the sharing of health data, but continue to be far from achieving the two-way electronic data exchange capability envisioned in the Health*e*People (Federal) strategy. The departments are continuing to take actions to develop their individual health information systems that are critical to exchanging patient health information and to define data standards that are essential to the common sharing of health information. In addition, department officials stated that they are proceeding with a pharmacy data prototype initiative, begun in March 2004, to satisfy a mandate of the Bob Stump National Defense Authorization Act for Fiscal Year 2003,[5] as an initial step toward achieving Health*e*People (Federal). At this stage, however, they have not developed a strategy to explain how this project will contribute to defining the technological solution for the data exchange capability. As such, VA and DOD continue to lack a clearly defined architecture and technological solution for developing the electronic interface and associated capability for exchanging patient health information between their new systems. Moreover, the departments remain challenged to articulate a clear vision of how this capability will be achieved, and in what timeframe.

Enclosure II: GAO Testimony on VA and DOD Sharing of Patient Health Information—Continued

Testimony date/ number	Summary of Results
March 17, 2004 GAO–04–402T	VA and DOD had made little progress since November 2003 toward defining how they intended to achieve the two-way exchange of patient health information under the HealthePeople (Federal) initiative. While VA officials recognized the importance of an architecture to describe in detail how the departments would electronically interface their health systems, they continued to rely on a less-specific, high-level strategy—in place since September 2002—to guide the development and implementation of this capability. The departments intended to rely on a pharmacy prototype project undertaken in March 2004 to better define the electronic interface needed to exchange patient health data, but had not fully determined the approach or requirements for this undertaking. Thus, there was little evidence of how this project would contribute to defining a specific architecture and technological solution for achieving a two-way exchange of patient health information. These uncertainties were further complicated by the absence of sound project management to guide the departments' actions on the HealthePeople (Federal) initiative. Although progress toward defining data standards continued, delays had occurred in VA's and DOD's development and deployment of their individual health information systems, critical for achieving the electronic interface.
November 19, 2003 GAO–04–271T	The one-way transfer of health information resulting from VA's and DOD's near-term solution—the FHIE—represented a positive undertaking and had enabled electronic health data from separated (retired or discharged) service members contained in DOD's Military Health System Composite Health Care System to be transmitted monthly to a VA FHIE repository, giving VA clinicians more ready access to DOD health data, such as laboratory, pharmacy, and radiology records, on almost two million patients. The departments' longer term strategy to enable electronic, two-way information sharing—HealthePeople (Federal)—was farther out on the horizon, and VA and DOD faced significant challenges in implementing a full data exchange capability. Although a high-level strategy existed, the departments had not clearly articulated a common health information infrastructure and architecture to show how they intended to achieve the data exchange capability or what they would be able to exchange by the end of 2005. Critical to achieving the two-way exchange was completing the standardization of the clinical data that the departments planned to share.
September 26, 2002 GAO–02–1054T	VA and DOD reported some progress in achieving the capability to share patient health care data under the Government Computer-Based Patient Record (GCPR) initiative. The agencies had, since March 2002, formally renamed the initiative the Federal Health Information Exchange and begun implementing a more narrowly defined strategy involving the one-way transfer of patient health data from DOD to VA; a two-way exchange was planned by 2005.
March 13, 2002 GAO–02–369T	VA had achieved limited progress in its joint efforts with DOD and the Indian Health Service[6] to create an interface for sharing data in their health information systems, as part of GCPR. Strategies for implementing the project continued to be revised, its scope had been substantially narrowed from its original objectives, and it continued to operate without clear lines of authority or comprehensive, coordinated plans. Consequently, the future success of this project remained uncertain, raising questions as to whether it would ever fully achieve its original objective of allowing health care professionals to share clinical information via a comprehensive, lifelong medical record.

Enclosure II: GAO Testimony on VA and DOD Sharing of Patient Health Information—Continued

Testimony date/ number	Summary of Results
February 27, 2002 GAO–02–478T	DOD's and VA's numerous databases and electronic systems for capturing mission-critical data, including health information, were not linked, and information could not be readily shared. DOD had several initiatives under way to link many of its information systems—some with VA. For example, to create a comprehensive, lifelong medical record for service members and veterans and to allow health care professionals to share clinical information, the departments, along with the Indian Health Service, initiated the GCPR project in 1998. However, several factors, including planning weaknesses, competing priorities, and inadequate accountability, made it unlikely that they would achieve a GCPR or realize its benefits in the near future. To strengthen management and oversight of the project, we recommended designating a lead entity with clear lines of authority for the project and the creation of comprehensive and coordinated plans for sharing meaningful, accurate, and secure patient health data. For the near term, DOD and VA had decided to reconsider their approach to GCPR and focus on allowing VA to access selected service members' health data captured by DOD, such as laboratory and radiology results, outpatient pharmacy data, and patient demographic information. However, GCPR would not provide VA with access to information on the health status of personnel when they entered military service; on medical care provided to Reservists while not on active duty; or on the care military personnel received from providers outside DOD, including those from TRICARE.[7]
January 24, 2002 GAO–02–377T	DOD improved its medical surveillance system under Operation Joint Endeavor. However, system problems included lack of a single, comprehensive electronic system to document and access medical surveillance data. Some DOD initiatives to improve information technology capability were several years away from full implementation. The ability of VA to fulfill its role in serving veterans and providing backup to DOD in times of war was to be enhanced as DOD increased its medical surveillance capability. GCPR was a joint DOD/VA initiative in conjunction with the Indian Health Service to link information systems. However, because of planning weaknesses, competing priorities, and inadequate accountability, it was unlikely that the departments would accomplish GCPR or realize its benefits in the near future. To strengthen management and oversight of the initiative, we again recommended designating a lead entity with clear lines of authority for the project and the creation of comprehensive and coordinated plans for sharing meaningful, accurate, and secure patient health data.
October 16, 2001 GAO–02–173T	DOD and VA were establishing a medical surveillance system for the health care needs of military personnel and veterans. The system was to collect and analyze uniform information on deployments, environmental health threats, disease monitoring, medical assessments, and medical encounters. We identified weaknesses in DOD's medical surveillance capability and performance in the Gulf War and Operation Joint Endeavor, and uncovered deficiencies in its ability to collect, maintain, and transfer accurate data. The department had several initiatives under way to improve the reliability of deployment information and to enhance its information technology capabilities, although some initiatives were several years away from full implementation. VA's ability to serve veterans and provide backup to DOD in times of war was to be enhanced as DOD increased its medical surveillance capability. GCPR was one initiative to link the departments' information systems. However, because of planning weaknesses, competing priorities, and inadequate accountability, it was unlikely that they would accomplish GCPR or realize its benefits in the near future. To strengthen management and oversight of the initiative, we recommended designating a lead entity with clear lines of authority for the project and the creation of comprehensive and coordinated plans for sharing meaningful, accurate, and secure patient health data.

Source: GAO.
(310918)

[4] Shared patients receive care from both VA and DOD clinicians. For example, veterans may receive outpatient care from VA clinicians and be hospitalized at a military treatment facility.

[5] P.L. 107–314, sec. 724 (2002).

[6] Initially, the Indian Health Service was also a party to this effort, but was not included in a later revised strategy for electronically sharing patient health information.

[7] TRICARE is the Department of Defense's worldwide health care program for active duty and retired uniformed services members and their families.

Committee on Veterans' Affairs
Subcommittee on Oversight and Investigations
Washington, DC.
February 5, 2008

Honorable Robert M. Gates
Secretary
U.S. Department of Defense
1000 Defense Pentagon
Washington, DC 20301–1000

Dear Secretary Gates:

On Wednesday, October 24, 2007, the Subcommittee on Oversight and Investigations of the House Committee on Veterans' Affairs held a hearing on the sharing of electronic medical information between the Department of Defense (DoD) and the Department of Veterans Affairs (VA).

During the hearing, the Subcommittee heard testimony from Dr. Stephen Jones, Principal Deputy Assistant Secretary for Defense for Health Affairs; and Colonel Gregory Andre Marinkovich, M.D., Data Management Product Line Functional Manager, Clinical Information Technology Program Office (CITPO). Dr. Jones was accompanied by Mr. Charles Campbell, Acting Chief Information Officer, TRICARE Management Activity; and Colonel David Gilbertson, Program Manager, CITPO. As a follow-up to that hearing, the Subcommittee is requesting that the following questions be answered for the record:

1. Please provide the Subcommittee with a list of each medical information sharing initiative currently being worked on by DoD and VA, and a timeline for completion of each such initiative.
2. What is being done to train medical providers prior to deployment to the theatre on the use of AHLTA–T in order to provide full utilization of the system once in theatre?
3. The Subcommittee has heard that there is insufficient or insufficiently reliable bandwidth to ensure the electronic transmission of medical information from the current CENTCOM combat theaters to DoD medical facilities outside of theater, or between medical facilities within theater. Please tell the Subcommittee what steps DoD is taking to resolve these bandwidth issues, provide a timeline for implementation of these steps, and state in detail how DoD intends to provide sufficient support within theater to the maintenance of adequate bandwidth for medical information.
4. Should there be an interoperability requirement for major medical IT systems and devices that are procured by both DoD and VA? Are DoD and VA, or either one, developing standards to ensure that information generated by major medical systems and devices procured by the departments are bidirectionally electronically accessible?
5. Is DoD in the process of developing an enterprise inpatient electronic medical record system? If so, please provide a description of this development and provide a timeline for completion.
6. What steps, if any, is DoD taking to transfer data from CIS (Essentris) to the Clinical Data Repository?

We request you provide responses to the Subcommittee no later than close of business on Friday, March 7, 2008.

Sincerely,

HARRY E. MITCHELL
Chairman

GINNY BROWN-WAITE
Ranking Republican Member

Hearing Date: October 24, 2007
Committee: HVA
Members: Congressman Mitchell, Congresswoman Brown-Waite
Witness: Dr. Jones

Medical Information Sharing

Question #1: Please provide the Subcommittee with a list of each medical information sharing initiative currently being worked on by DoD and VA, and a timeline for completion of each such initiative.

Answer: Since 2001, the Department of Defense (DoD) and the Department of Veterans Affairs (VA) have made tremendous progress in sharing electronic health information, with a noticeable increase this past year. Accelerated efforts in response to the emerging and urgent needs for increased support of care that both Departments deliver to America's returning Wounded Warriors are possible, in large part, because of the foundation both Departments have worked to establish. This foundation includes advanced information technology products required to share information, a firm commitment from top leaders of both Departments to work as closely as possible to support a common mission, and established processes and policies that enable DoD and VA to work together effectively. Under the VA/DoD Joint Strategic Plan, health information technology data sharing initiatives are prioritized by DoD and VA leadership.

Current Health Data Sharing:

- Inpatient and outpatient laboratory and radiology results, allergy data, outpatient pharmacy data, demographic data, and theater clinical data, including inpatient notes, outpatient encounters, and ancillary clinical data, such as pharmacy data, allergies, laboratory results, and radiology reports is available through AHLTA, DoD's electronic health record, and through Veterans Health Information Systems & Technology Architecture (VistA), VA's electronic health record, for patients treated by both Departments
- Inpatient discharge summaries from 13 of DoD's largest inpatient facilities
- Radiology images for severely wounded and injured Service members for patients transferring from Walter Reed Army Medical Center (WRAMC), National Naval Medical Center (NNMC) Bethesda, and Brooke Army Medical Center (BAMC) to the VA Polytrauma Centers in Tampa, Richmond, Palo Alto, and Minneapolis
- Paper medical records scanned to create portable document format documents for electronic transmission for patients transferring from WRAMC, BAMC and NNMC to the VA Polytrauma Centers in Tampa, Richmond, Palo Alto, and Minneapolis
- Pre- and Post-Deployment Health Assessments and Post-Deployment Health Re-assessments for separated Service members and demobilized Reserve and National Guard members who have deployed
- Laboratory (chemistry) order entry and results retrieval shared among DoD, VA and commercial reference laboratories. Laboratory Data Sharing Initiative is available for use throughout DoD and is actively being used on a daily basis between DoD and VA at several sites where one Department uses the other as a reference lab. Anatomic Pathology/Microbiology functionality became operational at BAMC and VA South Texas Health Care System in 2007, and is available to other sites with a business case for its use
- When a Service member's active duty term ends, DoD transmits to VA inpatient and outpatient laboratory and radiology results, outpatient pharmacy data, allergy information, consult reports, admission, disposition and transfer information, elements of the standard ambulatory data records and demographic data

Timeline:

• Recovery Care Coordinator Information Technology Support Plan (in response to the President's Commission on Care for America's Wounded Warriors)	Nov 2007
• Bidirectional, real-time view of provider notes, procedures, and problem lists	Dec 2007
• Discharge summaries for inpatient mental health from Landstuhl Regional Medical Center (LRMC)	Dec 2007
• Plan for eBenefits Web portal (in response to President's Commission on Care for America's Wounded Warriors report)	Dec 2007
• Inpatient consults and operative reports (Madigan Army Medical Center and VA Puget Sound)	Dec 2007

• Inpatient consults and operative reports (additional 13 inpatient sites)	Mar 2008
• Draft DoD/VA Information Interoperability Plan	Mar 2008
• Plan for enterprise-wide image sharing	Mar 2008
• Discharge summaries from LRMC for medical/surgical, recovery room, intensive care unit, and operating room	Mar 2008
• Bi-directional, real-time view of vital signs	Jun 2008
• Analysis of alternatives for joint inpatient record	Aug 2008
• Bi-directional, real-time view of family history, social history, questionnaires, and forms	Sep 2008
• Computable laboratory data exchange	Sep 2008

Medical Provider Training

Question #2: What is being done to train medical provider prior to deployment to the theatre on the use of AHLTA–T in order to provide full utilization of the system once in theatre?

Answer: The Theater Medical Information Program (gram (TMIP) provides wartime medical forces support applications to the Army, Navy and Air Force for deployment and sustainment operations in the theater environment. TMIP supports all medical functional areas, including command and control, medical logistics, blood management, patient regulation and evacuation, medical threat/intelligence, health care delivery, manpower and training, and medical capability assessment and sustainment analysis. TMIP integrates information from other medical systems, including AHLTA–T, Defense Blood Standard System, and Defense Medical Logistics Standard Support (DMLSS). The military Services are responsible for ensuring users are adequately trained to use these systems. The Air Force provides AHLTA–T training for all providers prior to deployment. The Navy does not provide AHLTA–T training prior to deployment, but training supported by the Army Medical Communications for Combat Casualty Care (MC4) occurs during a general orientation upon arrival in theater. The Army MC4 training program for providers includes the following levels of TMIP application training:

- Pre-deployment—Active, Reserve, and Guard units receive classroom training before being deployed, using the same systems they will use in theater
- Collective Unit Training—occurs during unit deployment training exercises, such as those conducted at the Joint Readiness Training Center
- Institutional Familiarization Training—MC4 is working with the Army Medical Department Center and School, and the Special Forces School to incorporate MC4 familiarization training into their curriculums
- Reception, Staging, Onward movement and Integration training in Kuwait—unit and individual training at Kuwait staging area prior to unit arrival in the area of responsibility
- Theater Training—Embedded MC4 trainers provide classroom and over-the-shoulder training onsite, in theater
- Computer-based Training—online and compact disk versions of training available worldwide

Theater Bandwidth

Question #3: The Subcommittee has heard that there is insufficiently reliable bandwidth to ensure the electronic transmission of medical information from the currently CENTCOM combat theaters to DoD medical facilities outside of theater or between medical facilities with theater. Please tell the Subcommittee what steps DoD is taking to resolve these bandwidth issues, provide a timeline for implementation of these steps, and state in detail how DoD intends to provide sufficient support within theater to the maintenance of adequate bandwidth for medical information.

Answer: Based on the August 23, 2007 Joint Urgent Operational Need (JUON), United States Central Command (USCENTCOM) is working with Service components (Army-Central Command, Air Force-Central Command, Navy-Navy Central Command, and Marines-Marine Central Command) and the Joint Task Forces to identify gaps in the transmission of medical information and images within the USCENTCOM Area of Responsibility. Based on these requirements, USCENTCOM will conduct an analysis of theater bandwidth upgrade alternatives, to include technical capabilities, costs, and implementation/sustainment plans, and provide a detailed request for assistance to the Director, Command, Control, Communications, and Computer Systems, Joint Staff early in the 2nd quarter of fiscal year 2008. If

approved, the theater bandwidth upgrade project should be completed within approximately 200 days of receipt of funds.

Inter-Departmental IT Interoperability Requirement

Question #4: Should there be an interoperability requirement for major medical IT systems and devices that are procured by both DoD and VA? Are DoD and VA, or either one, developing standards to ensure the information generated by major medical systems and devices procured by the departments a bidirectional electronically accessible.

Answer:

- The Department of Defense (DoD) is focused on interoperability for information technology systems, devices and the bidirectional sharing of medical information when appropriate. An explicit mandate to address interoperability is not required.
- DoD and the Department of Veterans Affairs (VA) already share a tremendous amount of electronic health information and lead the Nation in sharing computable health data.
- DoD and VA are members of the American Health Information Community and actively participate with the Healthcare Information Technology Standards Panel to collaborate on and advance the development, adoption, and implementation of interoperable electronic health information capabilities, standards, and business practices that enhance the sharing of medical information with the federal and private sectors.
- The VA/DoD Joint Strategic Plan has a number of objectives that focus on increasing the bidirectional electronic health data access between DoD and VA.
- DoD actively participates in and contributes to standards development organizations such as Health Level 7, which is an all-volunteer, not-for-profit organization involved in the development of international healthcare standards.
- DoD and VA are engaged in an assessment of the requirements and approach for a joint inpatient electronic health record (EHR) and plan to provide a recommendation for the inpatient EHR by August 2008.

Future DoD Enterprise Electronic Medical Record System

Question #5: Is DoD in the process of developing an enterprise inpatient electronic medical record system? If so, please provide a timeline for completion.

Answer: The Military Health System (MHS) currently uses the Essentris system for inpatient electronic health record (EHR) support at 17 military treatment facilities representing 45% of the MHS inpatient workload. The Department of Defense (DoD) and the Department of Veterans Affairs (VA) are collaborating on an assessment of requirements and an approach for a joint inpatient electronic health record.

Anticipated benefits of this initiative include:

- Leverage economies of scale
- Facilitate exchange of inpatient data, thereby improving continuity of care
- Accelerate the adoption and implementation of standards to promote interoperability
- Better meet requirements for joint facilities

Key elements of this joint initiative include:

- Analyze the clinical processes and feasibility over the initial 6-month period from August 2007—January 2008
- Document and assess DoD and VA inpatient clinical processes, workflows, and requirements
- Identify the areas of commonality and the areas of uniqueness
- Determine the benefits and the impacts on DoD and VA timelines and costs for deploying a common inpatient EHR solution
- Analyze alternatives, develop the business case and produce a recommendation for the joint inpatient EHR approach by August 2008

Transfer of Data from CAS to Clinical Data Repository

Question #6: What steps, if any, is DoD taking to transfer data from CAS (Essentris) to the Clinical Data Repository?

Answer: The Military Health System (MHS) recognizes the need and benefit of providing secure, enterprise-wide access to inpatient clinical data within the AHLTA

Clinical Data Repository (AHLTA–CDR). The MHS is currently focused on two key initiatives in support of this goal.

The MHS is conducting a prototype effort at Madigan Army Medical Center to determine the feasibility of transferring Essentris inpatient data to the AHLTA–CDR. Because Essentris is an interim MHS inpatient system, the focus of this effort has been on defining the key inpatient documentation that should be transferred. Current inpatient documentation under consideration includes inpatient history and physical condition data, discharge summaries, operative reports, and inpatient consultation reports.

The MHS is also developing the Document, File, and Image-Enabled (DFIEA) capability within AHLTA to improve the transfer, storage, and access of many types of clinical data, to include the transfer of inpatient information from Essentris to the AHLTA–CDR. The DFIEA capability is targeted for DoD-wide activation in the 4th quarter of FY 2008. The MHS anticipates completion of plans for transferring Essentris inpatient notes into DFIEA in the 1st quarter of fiscal year 2009.

Committee on Veterans' Affairs
Subcommittee on Oversight and Investigations
Washington, DC.
February 5, 2008

Hon. James B. Peake
Secretary
U.S. Department of Veterans Affairs
810 Vermont Avenue, NW
Washington, DC 20420

Dear Secretary Peake:

On Wednesday, October 24, 2007, the Subcommittee on Oversight and Investigations of the House Committee on Veterans' Affairs held a hearing on the sharing of electronic medical information between the Department of Defense (DoD) and the Department of Veterans Affairs (VA).

During the hearing, the Subcommittee heard testimony from Dr. Gerald M. Cross, Principal Deputy Under Secretary for Health; and Howard B. Green, Deputy Director of the Health Management Office in the Office of Information and Technology (OI&T). Dr. Cross was accompanied by Dr. Paul Tibbits, Deputy Chief Information Officer, OI&T; and Mr. Cliff Freeman, Director of VA/DoD Interagency Programs, Veterans Health Administration. As a follow-up to that hearing, the Subcommittee is requesting that the following questions be answered for the record:

1. Please provide the Subcommittee with a list of each medical information sharing initiative currently being worked on by DoD and VA, and a timeline for completion of each such initiative.
2. Should there be an interoperability requirement for major medical IT systems and devices that are procured by both DoD and VA? Are DoD and VA, or either one, developing standards to ensure that information generated by major medical systems and devices procured by one department be electronically accessible by the other department?

We request you provide responses to the Subcommittee no later than close of business on Friday, March 7, 2008.

Sincerely,

HARRY E. MITCHELL
Chairman

GINNY BROWN-WAITE
Ranking Republican Member

Questions for the Record
Hon. Harry E. Mitchell, Chairman
Hon. Ginny Brown-Waite, Ranking Republican Member
House Veterans' Affairs Committee
Oversight and Investigations Subcommittee
October 24, 2007

Sharing of Electronic Medical Information Between Department of Defense and Department of Veterans Affairs

Question 1: Please provide the Subcommittee with a list of each medical information sharing initiative currently being worked by the Department of Defense (DoD) and VA, and a timeline for completion of each such initiative:

Response: By September 2008, Department of Veterans Affairs (VA) and DoD health data sharing improvements will include the addition of:

Data Sharing Initiative	Target Completion (by the end of)
Inpatient consults	March 2008
Operative reports	March 2008
Plan for movement of medical images	March 2008
Laboratory data sharing interface for reference labs	April 2008
Vital signs	June 2008
Joint inpatient phase 2 analysis—technical feasibility	July 2008
Family history	September 2008
Questionnaires and forms	September 2008
Other history	September 2008
Social history	September 2008
Bi-directional health information exchange—VA–DoD imaging	September 2008

Question 2: Should there be an interoperability requirement for major medical IT systems and devices that are procured by both DoD and VA? Are DoD and VA, or either one, developing standards to ensure that information generated by major medical systems and devices procured by one department be electronically accessible by the other department?

Response: An interoperability requirement for major medical information technology (IT) devices procured by both VA and DoD should, and in fact does, exist. VA currently adheres to industry standards for medical device compliance.

Information exchange between VA and DoD systems is of the utmost importance. This is why VA and DoD both adhere to common standards for the exchange of information between their interoperable systems. VA complies with industry standards for medical equipment whenever possible. The following is a sampling of some of the standards with cross-program impacts.

- DICOM (http://medical.nema.org/): used for imaging devices. All VA-procured imaging devices are DICOM-compliant, as are internally developed and procured imaging software systems.
- HL7 (http://www.hl7.org/): a device interoperability standard. VA adheres to HL7 standards in a number of manners, both applications and devices.
- Laboratory standards: VA procures lab equipment that meet industry laboratory equipment standards.

VA and DoD are committed to compliance with health data standards as they are identified, recommended and recognized by the Department of Health and Human Services (HHS). VA and DoD also participate in the Healthcare Information Technology Standards Panel (HITSP) a public-private initiative that develops and recommends harmonized interoperability specifications. Additionally, the HHS Office of the National Coordinator for Health Information Technology is developing model

contract language to assist Federal agencies to comply with interoperability standards requirements set forth in Executive Order 13410.

Health Executive Council Highlights
FY2003—Q1 FY2008
June 10, 2008

Patient Safety Working Group

Purpose:

The Patient Safety Working Group will oversee the design, development, and distribution of joint patient safety initiatives, consistent with legal requirements on uses of quality assurance information.

Accomplishment(s):

- ✔ Signed Data Use Agreements (DUAs) in May 2008 to allow the sharing of information. Sharing information between Departments will allow the Working Group to produce monthly progress reports related to unintentionally retained surgical items, incorrect surgery, invasive procedures, falls and inpatient suicides. The summary reports will show analyses of selected subtypes of events, and information on root causes and contributing factors that lead to these types of adverse events in health care systems, as well as examples of interventions implemented in both systems.

Evidence Based Practice Working Group

Purpose:

The Evidence Based Practice Working Group will use clinically diverse and collaborative groups to develop, update, adapt, adopt and/or revise four evidence-based clinical practice guidelines (EBCPGs) annually. EBCPGs reduce variation in care, optimize patient outcomes, and improve the overall health of beneficiaries.

Accomplishment(s):

- ✔ Created tools to support a culture that uses evidence-based clinical practices including web based interactive tools, pocket cards, PDA-friendly versions of EBCPGs and educational videos.

Measureable Outcome(s):

Completed nine new EBCPGs since FY2005. Numerous EBCPGs reviewed.

Mental Health Working Group

Purpose:

The Mental Health Working Group will work together to explore mechanisms to identify individuals with serious mental health issues or who are at risk for suicide in order to insure appropriate assessment and indicated treatment are offered. The Working Group will also coordinate to plan and implement shared training programs to increase the use of evidence-based psychotherapy and pharmacotherapy approaches in both Departments.

Accomplishment(s):

- ✔ Trained 119 providers on how to conduct Cognitive Processing Therapy for Post Traumatic Stress Disorder and how to teach others to conduct this psychotherapy.
- ✔ Ensured clinicians were aware that relevant Clinical Practice Guidelines (CPGs) were applicable to both DoD and VA. Provided clinicians with clear direction on each Department's mental health diagnosis/treatment regimens. Communicated the availability of data in Bidirectional Health Information Exchange (BHIE) relevant to the treatment of Operation Enduring Freedom/Operation Iraqi Freedom (OEF/OIF) veterans.
- ✔ Coordinated Blue Ribbon and Expert Panels to meet June 11–13, 2008 to prepare formal recommendations for joint VA/DoD Suicide Prevention activities.

Graduate Medical Education Working Group

Purpose:

The Graduate Medical Education (GME) Working Group will examine opportunities for greater VA/DoD GME collaboration and conduct a needs assessment of GME programs which may have been adversely impacted by the Base Realignment and Closure (BRAC) Act.

Accomplishment(s):

- ✔ Selected San Diego as the pilot site for the Seamless Transition for Trainees Program. The focus of this pilot project is on reducing red tape and streamlining access to educational resources for VA and DoD trainees as they transition between sites.
- ✔ Completed a pilot project placing military physician residents in VA-affiliated university programs. As part of the program, DoD medical residents rotated through VA facilities and provided care to VA patients under the supervision of VA and university faculty. Lessons learned will form the basis of program expansion.

Continuing Education and Training Working Group

Purpose:

The Continuing Education and Training Working Group will enhance the existing shared training partnership between VA and DoD to provide additional and improved shared training by optimizing the distributed learning architecture which supports the sharing of continuing education and in-service training programs for health care professionals in VA and DoD.

Accomplishment(s):

- ✔ Completed Distributed Learning Architecture Research Project and Satellite Broadcast Initiative.
- ✔ Established and managed a VA/DoD Facility Based Educators community of practice to increase communications between and among VA and DoD facility based educators.
- ✔ Conducting pilot program for leaders and managers at the North Chicago Joint Federal Health Care Facility (VA & U.S. Navy).

Measureable Outcome(s): Shared 254 programs in FY 07

Cost Avoidance: Shared 254 programs with cost avoidance of $7.5 million in FY 07. First quarter of FY 08 number increased 44% over same period last year.

Cost: JIF Funding Received: Distributed Learning Architecture Research Project—$400,000 and Satellite Broadcast Initiative—$3.2 million

Deployment Health Working Group

Purpose:

The Deployment Health Working Group will identify opportunities to share information between DoD and VA on 1) health surveillance of military populations, including identification of cohorts with specific exposures or diseases, 2) the assessment and screening of deployed populations, and 3) follow-up medical care of deployed populations.

Accomplishment(s):

- ✔ Analyzed VA health care utilization among Southwest Asian War Veterans.
- ✔ Developed the assessment form and procedures for the post-deployment health reassessment (PDHRA), to screen for physical health and mental health concerns at 90 and 180 days after return from their deployments, in order to determine if referral for further medical evaluation is warranted. PDHRA information can be communicated electronically via the Federal Health Information Exchange (FHIE).
- ✔ Conducted medical surveillance activities and planning activities related to depleted uranium exposure and pandemic flu.
- ✔ Collaborated in the development of risk communication and outreach products to service members and veterans related to military health issues, including occupational and environmental exposures. For example, DoD launched a Web site entitled the *Deployment Health and Family Readiness Library* and the VA published several products for health care providers related to endemic infectious diseases of the Middle East.

✔ Developed an inventory of more than 350 DoD and VA research projects related to the health of deployed service members and veterans.

Information Management/Information Technology Working Group

Purpose:

The Information Management/Information Technology Working Group will support interoperable enterprise architectures and data management strategies to support timely and accurate delivery of benefits and services.

Accomplishment(s):

✔ Completed the Federal Health Information Exchange (FHIE) in 2004, and transferred clinical data on more than 4 million veterans as of September 2007.
✔ The Bidirectional Health Information Exchange (BHIE) allows a real-time, two-way view of certain outpatient health data from existing systems at all VA and DoD sites, and certain inpatient discharge summary data at all VA sites and 13 large DoD sites.
✔ The Joint Patient Tracking Application/VA Tracking Application (JPTA) allows real time tracking of patients from point of injury to arrival in continental U.S. Joint access now enables VAMCs to contact patients and encourage them to enroll in VA healthcare.

Measureable Outcome(s):

Performance Measure	Status
The number of DoD service members with historical data transferred to VA;	4.3 million as of March 2008.
The number of patients flagged as "active dual consumers" for VA/DoD electronic health record data exchange purposes;	18,160 as of May 1, 2008.
The number of Pre- and Post-Deployment Health Assessment (PPDHA) forms and PDHRA forms transferred to VA;	2.2 million as of March 2008.
The number of individuals with PPDHA and PDHRA forms transferred to VA;	894,000 as of March 2008.
The number of chemistry and anatomic pathology/microbiology laboratory tests processed using the Laboratory Data Sharing Initiative;	Over 350,000 reported as of May 2008.
The number of patients for which digital images have been transmitted electronically from Walter Reed Army Medical Center, National Naval Medical Center Bethesda and Brooke Army Medical Center to VA Polytrauma Centers at Tampa, Palo Alto, Richmond and Minneapolis;	84 as of March 2008.
The number of patients for which medical records have been scanned and sent electronically from Walter Reed Army Medical Center, National Naval Medical Center Bethesda and Brooke Army Medical Center to VA Polytrauma Centers at Tampa, Palo Alto, Richmond and Minneapolis.	133 as of March 2008.

Acquisition and Medical Materiel Management Working Group

Purpose:

The Acquisition and Medical Materiel Management (A&MMM) Working Group will assess VA and DoD processes related to the acquisition of goods and services and make recommendations to achieve joint operational and business efficiencies.

Accomplishment(s):

✔ Developed Product Data Bank (PDB) for standardization of product files as a precursor to a joint electronic catalog.
✔ Through PDB synchronization process, created an accurate master item records covering 93 percent ($407 million) of DoD top buys and 57 percent ($323 million) of VA top buys as of 2007. Twenty VA sites have been trained on the use of this tool.
✔ FY 2007 joint/shared contracts exceeded $580 million.
✔ The Defense Supply Center in Philadelphia (DSCP) had sales under these shared contracts just over $102 million through the third quarter of FY 2007.

✔ Reverse Distribution contracts ("pharmaceutical returns") were awarded to six suppliers in 2007.

Cost Savings: Annual savings in outdated pharmaceuticals are estimated to be $49 million. Projected return on investment for PDB is $40 million through FY2010.
Cost: JIF Funding Received: $15.1 million for PDB development over the period FY2006–FY2010

Pharmacy Working Group

Purpose:

The Pharmacy Working Group will identify pharmaceuticals and commonly used products and manufacturers for potential joint contracting action and continue to seek new joint contracting opportunities.

Accomplishment(s):

✔ In FY 07 VA and DoD spent $389 million on Joint national pharmaceutical contracts.
✔ Continue to review expiring contracts for conversion to joint contracts, including brand-to-generic conversions and new molecular entities used in the ambulatory setting.

Cost Avoidance: In FY 07 VA estimated cost avoidance for DoD/FDA Shelf Life Extension Program (SLEP) participation was $7.3 million

Financial Management Working Group

Purpose:

The Financial Management Working Group will review the Memorandum of Agreement and scoring criteria for the DoD–VA Health Care Sharing Incentive Fund or Joint Incentive Fund (JIF) to ensure proper emphasis is given to corporate direction, task force/review group recommendations, and new legislation. The JIF's purpose is to carry out a program to identify, provide incentives to, implement, fund, and evaluate creative coordination and sharing initiatives at the facility, intra-regional, and nationwide level.

Accomplishment(s):

✔ Projects have been funded by JIF (JIF II) to support the Dole/Shalala commission

- *DoD/VA Digital Imaging and Scanned Document Sharing Phase IIB*
  This project will allow digital images for critically wounded warriors to be imported into the VA and DoD picture archive and communications systems (PACs) in an organized and timely manner. Currently images are manually stored on CDs and require several days to import.
- *DoD/VA Digital Imaging and Scanned Document Sharing Phase III*
  This project is a follow on to Phase IIB described above. It addresses critical national-level needs in treating our Wounded Warriors by providing the capability for automatic electronic bidirectional sharing of medical digital images and scanned documents between the DoD and VA.
- *DoD/VA eBenefits Portal Phase III*
  The scope for the eBenefits Portal initiative is to initially leverage and integrate existing portals/Web sites. The eBenefits Portal infrastructure will be the platform to integrate self-service applications and other online services. The interface design goal is to give Wounded Warriors a central access point to online services with improved information architecture. The eBenefits Portal is a phased project. Phase III personalizes the eBenefits Portal capabilities to the needs of the wounded, ill, or injured service member.
- *Armed Forces Institute of Regenerative Medicine (AFIRM) Program*
  The U.S. Army Medical Research and Material Command is establishing two AFIRM programs dedicated to repairing battlefield injuries through the use of regenerative medicine. This project funded one of the two AFIRM programs.

Measureable Outcome(s):

$148 million of the $160 million contributed to JIF by DoD and DVA from FY2003 through FY2007 has been used to fund 69 projects.
Cost: $160 million as stated above

Joint Facility Utilization and Resource Sharing Working Group/Joint Market Opportunities

Purpose:

The Joint Facility Utilization and Resource Sharing Working Group will oversee VA and DoD efforts to jointly implement the National Defense Authorization Act (NDAA) Demonstration Projects in budget and financial management, coordinated staffing and assignment, and medical information and information technology management. The Working Group, through its Ad Hoc Joint Market Opportunities (JMO) Working Group, will assess additional health care markets serving large, multi-Service, DoD and VA populations.

Accomplishment(s):

- ✔ NDAA Demonstration Projects were completed. A preliminary report has been provided to the HEC. The final report is in process.
- ✔ The JMO Working Group was redirected by Deputy Secretary of Veterans Affairs Gordon H. Mansfield and Under Secretary of Defense for Personnel and Readiness David S.C. Chu in March 2008 to focus on sharing at four specific sites.
  - *VA Pacific Island Heath Care System/Tripler Army Medical Center, Honolulu, Hawaii*
  - *Mike O'Callaghan Federal Hospital, Las Vegas, NV*
  - *Eastern Colorado Health Care System/Buckley Air Force Base Medical Clinic, Denver*
  - *VA Gulf Coast Veterans Health Care System/Keesler Air Force Base, Biloxi, MS*
- ✔ Plans continue to be implemented for the first Federal Health Care Center (FHCC). The facility is scheduled to be operational by 2010. The FHCC will be a fully integrated partnership between Naval Hospital Great Lakes (NHGL) and North Chicago Veterans Affairs Medical Center (NCVAMC). This unique VA/DoD integration will operate under a single Chain of Command and serve beneficiary populations as if it were both a Military Treatment Facility and a VA Medical Center.

Cost savings for FHCC: Mental Health operations—$1 million annually
Cost avoidance for FHCC: Navy Blood Bank—$850K to $3.1 million
Cost reduction for FHCC: ICU/CCU operations reduced total costs by $920K

Contingency Planning Working Group

Purpose:

The Contingency Planning Working Group will collaborate to ensure that plans and readiness capabilities adequately support DoD combatant command contingency requirements and national emergency situations.

Accomplishment(s):

- ✔ In FY 2007, VA and DoD began implementing the *VA/DoD Memorandum of Agreement Regarding the Referral of Active Duty Military Personnel Who Sustain Spinal Cord Injury, Traumatic Brain Injury, or Blindness to Veterans Affairs Medical Facilities for Health Care and Rehabilitative Services,* signed on December 13, 2006. The Departments reached agreement on an implementation plan that, when fully adopted, will make significant operational enhancements to the existing nationwide system of patient receiving centers.
- ✔ Efforts to expand bilateral training opportunities, develop enhanced readiness indicators for patient receiving centers, and increase opportunities to participate in national-level exercises were initiated in FY 2007.

Seamless Transition

Purpose:

The goal of seamless transition is to coordinate medical care and benefits during the transition from active duty to veteran status to ensure continuity of services. Although the HEC is not assigned to report on this topic it has been active in several accomplishments related to the seamless coordination of veteran benefits.

Accomplishment(s):

- ✔ Launched the VHA/VBA OEF/OIF Case Management Program creating a fully integrated team approach to assisting veterans accessing care and receiving as-

sistance in applying for VA benefits beginning while the service members are still on active duty.

✔ Created the VA/DoD Family Transition Initiative to improve the transition process for families of seriously injured, inpatient Service members transferring to VA Poly-trauma Centers. 100 veterans' ombudsmen being hired to support initiative.

○