W.P. Product 4 of 6
Task 6.1

W.P.

New York Coastal Zone Management Program

Study of Sludge Management Alternatives For Seven Counties in the Hudson Valley

COASTAL ZONE
INFORMATION CENTER

October 31, 1986

HD
4479
.N7
N49
1986

New York State Environmental Facilities Corporation
50 Wolf Road, Albany, NY 12205 / (518) 457-4100

He Chairman

Terence P. Curran, P.E., Executive Director

AUTHENTICATED
U.S. GOVERNMENT
INFORMATION
GPO

STUDY OF SLUDGE MANAGEMENT ALTERNATIVES FOR SEVEN COUNTIES IN THE HUDSON VALLEY

NEW YORK STATE ENVIRONMENTAL FACILITIES CORPORATION
October 31, 1986

COASTAL ZONE
INFORMATION CENTER

Henry G. Williams, Chairman
Terence P. Curran, P.E., Executive Director

Property of CSC Library

U.S. DEPARTMENT OF COMMERCE NOAA
COASTAL SERVICES CENTER
2234 SOUTH HOBSON AVENUE
CHARLESTON, SC 29405-2413

HD4479.N7 N49 1986
22156915
FEB 2 6 1998

STUDY OF SLUDGE MANAGEMENT ALTERNATIVES FOR SEVEN COUNTIES IN THE HUDSON VALLEY

Prepared by: **New York State Environmental Facilities Corporation**
50 Wolf Road
Albany, New York 12205

Prepared for: **Dutchess County, Orange County, Putnam County, Rockland County, Sullivan County, Ulster County, Westchester County**

EFC Project Staff: **Terence P. Curran, P.E., Executive Director**
Kenneth F. Malcolm, Project Manager
Diana M. Hinchcliff, Project Coordinator and Editor
Special Assistance From:
Pickett T. Simpson, P.E.
Peter A. Marini, P.E.
Marian J. Mudar
J. Andrea Estus
Mary Johnson Blass
Donna Melcher

Funded by: **The Seven Counties through the Hudson Valley Regional Council**
New York State Department of State

Partially funded by a grant from the
Office of Ocean and Coastal Resource Management,
National Oceanic and Atmospheric Administration

October 31, 1986

New York State Environmental Facilities Corporation
50 Wolf Road, Albany, N.Y. 12205 / (518) 457-4100

Henry G. Williams
Chairman

Terence P. Curran, P.E.
Executive Director

October 31, 1986

TO: **Members of the Hudson Valley Regional Council:**
The Honorable Albert A. Favoino, Orange County, Chairman
The Honorable David D. Bruen, Putnam County
The Honorable James Gorman, Sullivan County
The Honorable John T. Grant, Rockland County
The Honorable Louis Heimbach, Orange County
The Honorable Richard B. Mathews, Ulster County
The Honorable Andrew P. O'Rourke, Westchester County
The Honorable Lucille Pattison, Dutchess County

In accordance with contract No. D002960, I am pleased to provide you with this study of sludge management alternatives for the counties of Dutchess, Orange, Putnam, Rockland, Sullivan, Ulster and Westchester.

A number of comments were received on the draft report, after a series of public hearings held by the counties. These comments have either been incorporated into this final version or appended in Section 8.

I would like to express my appreciation to the counties, the Hudson Valley Regional Council and the New York State Department of State for providing the funding for EFC to complete this very important study. I hope it will lead to a permanent, long-term effort to resolve the counties' sludge management problems through cooperative action.

Terence P. Curran, P.E.
Executive Director

BOARD OF DIRECTORS
NEW YORK STATE ENVIRONMENTAL FACILITIES CORPORATION

Directors

Henry G. Williams (Chairman and C.E.O.)
Commissioner
New York State Department of
Environmental Conservation

David Axelrod, M.D.
Commissioner
New York State Department of Health

Gail S. Shaffer
Secretary of State
New York State Department of State

Joseph A. Cimino, M.D.
Professor and Chairman
Department of Community and
Preventive Medicine

Martin S. Baker, Esq.
Rosenman Colin Freund Lewis & Cohen

TABLE OF CONTENTS

		Page
Letter of Transmittal		
Summary		i
SECTION 1.	**INTRODUCTION** Background Sludge Management in the Last Decade Description of this Study Scope of Work EFC and NYSDEC Project Staff Technical Task Group Task Group Activities	1
SECTION 2.	**DATA COLLECTION AND ANALYSIS** Introduction Difficulties with Collecting Data Verification of Sludge Quantities	7
	Sludge Management Inventory Municipal Sludge Solids Concentration Methods of Sludge Dewatering Methods of Sludge Stabilization Methods of Disposing of Sludge Sludge Quality Size of Treatment Plants in the Region Treatment Processes Used by STPs Industrial Flow to Treatment Plants	11
	Septage Hauler Inventory Septage Generation Methods of Septage Disposal	20
	Sludge and Septage Disposal Sites and Practices Inventory Methods of Sludge and Septage Disposal by County	22
	Population Projections and Future Waste Quantities	30
SECTION 3.	**TECHNICAL ALTERNATIVES FOR SLUDGE MANAGEMENT** Introduction	33
	Sanitary Landfill Requirements for Disposing of Sludge in a Landfill Estimating the Cost of a Landfill for Sludge Disposal	33

Page

Composting 36
Introduction
Requirements of the Composting Process
Composting Systems
Potential Uses of Compost
Safety and Health Aspects of Composting
Composting Facilities: Case Studies
Costs of Composting
Summary

Land Application 60
Introduction
Application Methods
Dual Utilization
Sludge Storage with Dual Utilization
Review of Recent USEPA-sponsored Studies
Potential for Implementation of Land Application in the Seven County Region
Recommendations for All Counties

Ocean Disposal 72
Introduction
Process
Safety and Health Considerations
Additional Considerations
Case Studies of Ocean Disposal

Thermal Reduction 80
Introduction
Incineration
Multiple Hearth Furnace
Fluidized Bed Incinerator
Rotary Kiln Furnace
Co-Incineration of Sewage Sludge and Municipal Refuse
Pyrolysis and Starved Air Combustion
Sludge Characteristics and Thermal Reduction
Advantages and Disadvantages of Thermal Reduction
Heat Treatment
Flash Dryers
Spray Dryers
Rotary Dryers

Page

Indirect Heat Dryers
Toroidal Dryer
Oil Immersion (Carver-Greenfield Process)
Solvent Extraction Dehydration (B.E.S.T. System)
Thermal Reduction Case Studies: Carver-Greenfield Process and Incineration
Summary

Considerations Common to Technical Alternatives 131
Introduction
Sludge Dewatering
Centrifuge
Experience with Centrifuges
Belt Press
Plate and Frame Filter Press
Air Drying
Vacuum Filter
Comparison of Dewatering Processes
Conclusions
Dewatering and Technical Alternatives
Transporting Sludge
Methods of Transport
Truck Transport
Transport by Pipeline
Barge Transport
Rail Transport
Cost Considerations for All Methods
Transfer Stations
Environmental Impacts of Transportation

Comparison of Costs for Sludge Management Alternatives 157

Other Wastestreams Generated During the Sewage Treatment Process 159
Grit
Floatable Solids
Screenings
Industrial Wastes

Review of Previous County Engineering Reports Recommending Technical Alternatives 162

SECTION 4. CURRENT REGULATIONS AND REGULATORY TRENDS RELATED TO SLUDGE MANAGEMENT 172

Land Application 172
Land Application Moratorium

Page

Sludge Composition
Heavy Metals and Toxic Organics
Pathogens
Miscellaenous Factors
Site Considerations
Management Considerations
Methods of Operation
Land Application Program Approval
Storage Regulations

Landfill 180
Present Situation
Future Policy

Composting 181
Present Situation
Future Policy

Ocean Disposal 184
Present Situation
Future Policy

Incineration 185
Present Situation
Future Policy

SECTION 5. **SITING SLUDGE MANAGEMENT FACILITIES** 194
Acquiring Land
Cost of Acquiring Land
Facility Siting Criteria
Size of Sludge Facilities
Site Selection Process
Siting a Landfill for the Ash Residue from Incineration
Host Community Incentives
Potential Sites

SECTION 6. **DEVELOPING, FINANCING AND IMPLEMENTING SLUDGE MANAGEMENT PROGRAMS** 213

Introduction

Procuring Services for Sludge Management Projects 213
Procurement Guidelines
Bidding Procedures
Procurement Alternatives

Institutional Mechanisms for Sludge Management Projects 216
Introduction
Available Mechanisms

LIST OF APPENDICES

APPENDIX A	SCOPE OF WORK
APPENDIX B	DETERMINING SLUDGE QUANTITIES
APPENDIX C	IN-VESSEL COMPOSTING SYSTEM SUPPLIERS
APPENDIX D	SAFETY AND HEALTH ASPECTS OF COMPOSTING
APPENDIX E	CALCULATIONS FOR COSTS TO IMPLEMENT SLUDGE MANAGEMENT OPTIONS
APPENDIX F	A PROCESS TO SIGNIFICANTLY REDUCE PATHOGENS
APPENDIX G	DECISION OF THE COMMISSIONER (LAND APPLICATION)
APPENDIX H	STANDARDS OF PERFORMANCE FOR SEWAGE TREATMENT PLANTS (FEDERAL REGULATIONS)
APPENDIX I	STANDARDS OF PERFORMANCE FOR INCINERATORS (FEDERAL REGULATIONS)
APPENDIX J	NATIONAL EMISSION STANDARD FOR MERCURY (FEDERAL REGULATIONS)
APPENDIX K	PART 212: GENERAL PROCESS EMISSION SOURCES (NYS REGULATIONS)
APPENDIX L	PART 219: INCINERATORS (NYS REGULATIONS)
APPENDIX M	PART 222: INCINERATORS--NEW YORK CITY, NASSAU AND WESTCHESTER COUNTIES (NYS REGULATIONS)
APPENDIX N	MUNICIPAL SOLID WASTE INCINERATION, REVISED DRAFT OPERATING REQUIREMENTS (NYS REGULATIONS)
APPENDIX O	SUMMARY OF PROCEDURE FOR CONDEMNATION OF PRIVATE PROPERTY

		Page
	Financing Sludge Management Projects Public Mechanisms Private Mechanisms Public/Private Mechanisms	221
	Revenue Sources and Grants Introduction Revenue Sources Grants	234
SECTION 7.	**RECOMMENDATIONS**	239
	Long Term Recommendations for Regionwide Sludge and Septage Management	239
	General Recommendations by Alternative	241
	Recommendations for Each County	245
SECTION 8.	**PUBLIC COMMENTS**	256

APPENDICES

VOLUME I
Appendices A through O

VOLUME II
Computer Reports for Sludge Management Inventory, Septage Hauler Inventory, and Disposal Site Inventory

LIST OF TABLES

		Page
TABLE 1	VERIFICATION OF SLUDGE QUANTITIES	9
TABLE 2	MUNICIPAL SLUDGE SOLIDS CONCENTRATION	11
TABLE 3	METHODS OF SLUDGE DEWATERING	12
TABLE 4	METHODS OF SLUDGE STABILIZATION	13
TABLE 5	METHODS OF DISPOSING OF SLUDGE	14
TABLE 6	SLUDGE QUALITY	15
TABLE 7	SIZE OF TREATMENT PLANTS IN THE REGION	17
TABLE 8	TREATMENT PROCESSES USED BY STPS	18
TABLE 9	INDUSTRIAL FLOW TO TREATMENT PLANTS	19
TABLE 10	SEPTAGE GENERATION	20
TABLE 11	METHODS OF SEPTAGE DISPOSAL	21
TABLE 12	SLUDGE AND SEPTAGE DISPOSAL SITES INVENTORY	22
TABLE 13	METHODS OF SLUDGE AND SEPTAGE DISPOSAL (TOTAL FOR ALL COUNTIES)	22

METHODS OF SLUDGE AND SEPTAGE DISPOSAL BY COUNTY:

TABLE 14	DUTCHESS COUNTY	23
TABLE 15	ORANGE COUNTY	24
TABLE 16	PUTNAM COUNTY	25
TABLE 17	ROCKLAND COUNTY	26
TABLE 18	SULLIVAN COUNTY	27
TABLE 19	ULSTER COUNTY	28
TABLE 20	WESTCHESTER COUNTY	29
TABLE 21	POPULATION DATA: 1985 POPULATION PROJECTIONS: 2000	32

		Page
TABLE 22	EXAMPLES OF PATHOGENS FOUND IN OR GENERATED DURING COMPOSTING TOGETHER WITH HUMAN DISEASES ASSOCIATED WITH THESE PATHOGENS	46
TABLE 23	COST ANALYSIS OF COMPOSTING AT VARIOUS FACILITIES	59
TABLE 24	SLUDGE AVAILABLE FOR LAND APPLICATION	67
TABLE 25	HEAVY METAL CONCENTRATIONS IN SEPTAGE COMPARED TO TECHNICAL DOMESTIC WASTEWATER SLUDGES	69
TABLE 26	ACREAGE REQUIREMENTS FOR LAND APPLICATION	70
TABLE 27	COMPARISON OF COSTS TO USE OCEAN DUMPING AT THE 106 MILE SITE FOR BOSTON, NEW YORK CITY AND WESTCHESTER	74
TABLE 28	CO-INCINERATION FACILITIES IN THE UNITED STATES	90-93
TABLE 29	TYPICAL CHEMICAL ANALYSIS OF CARBON AND MOISTURE-FREE INCINERATOR RESIDUE	97
TABLE 30	EP TOXICITY TEST RESULTS: OBSERVED CONCENTRATIONS	98
TABLE 31	PROXIMATE ANALYSIS OF PYROLYSIS CHAR	102
TABLE 32	HEATING VALUE OF TYPICAL RESIDUALS COLLECTED DURING SEWAGE TREATMENT	103
TABLE 33	COMPARATIVE HEATING VALUES OF PERTINENT FUELS	104
TABLE 34	REPRESENTATIVE CHEMICAL ANALYSES AND HEAT CONTENTS OF DRY REFUSE AND SEWAGE SLUDGE SAMPLES	105
TABLE 35	HEAT RELEASED ON COMBUSTION OF REFUSE AND SEWAGE SLUDGE	111
TABLE 36	CARVER-GREENFIELD DEHYDRATION WITH ENERGY RECOVERY	127
TABLE 37	SLUDGE CONCENTRATION PRODUCED BY CENTRIFUGAL DEWATERING	136
TABLE 38	TYPICAL DEWATERING PERFORMANCE OF BELT FILTER PRESSES	140
TABLE 39	TYPICAL DEWATERING PERFORMANCE OF A VARIABLE VOLUME RECESSED PLATE PRESSURE FILTER	145
TABLE 40	EXPECTED DEWATERING PERFORMANCE FOR A TYPICAL FIXED VOLUME RECESSED PLATE PRESSURE FILTER	146
TABLE 41	COMPARISON OF DEWATERING PROCESSES	150

		Page
TABLE 42	COSTS TO IMPLEMENT SLUDGE MANAGEMENT OPTIONS	158
TABLE 43	COST PER TON FOR SLUDGE MANAGEMENT OPTIONS	158
TABLE 44	PROJECTED QUANTITIES OF OTHER WASTESTREAMS FROM THE SEWAGE TREATMENT PROCESS	160
TABLE 45	CONTAMINANTS REGULATED BY NYSDEC	174
TABLE 46	SUITABILITY OF SOIL AND SITE CHARACTERISTICS FOR SLUDGE APPLICATION	176
TABLE 47	WASTE FEED RATES AND METHOD DURING TESTS ON CONTRA COSTA MULTIPLE HEARTH INCINERATOR	188
TABLE 48	CURRENT BASIS FOR DETERMINING THE APPLICABILITY OF THE NSPS TO INCINERATORS	192
TABLE 49	SLUDGE MANAGEMENT FACILITY SITING CONSTRAINTS	195
TABLE 50	SUMMARY OF PROCUREMENT PROCEDURES	215
TABLE 51	INSTITUTIONAL MECHANISMS FOR SLUDGE MANAGEMENT PROJECTS	218-220
TABLE 52	FINANCING MECHANISMS FOR SLUDGE MANAGEMENT PROJECTS	224-233
TABLE 53	REVENUE SOURCES	236
TABLE 54	SOURCES OF GRANTS	237-238

LIST OF FIGURES

		Page
FIGURE 1	EFC SLUDGE QUALTITY EVALUATION CRITERIA	16
FIGURE 2	INDIVIDUAL AERATED PILE	41
FIGURE 3	EXTENDED AERATED PILE	42
FIGURE 4	TYPICAL PROCESS FLOW: SCHEMATIC OF A CONFINED COMPOSTING SYSTEM	44
FIGURE 5	TYPICAL SECTION: MULTIPLE-HEARTH DRYER	81
FIGURE 6	FLOWSHEET FOR SLUDGE INCINERATION IN A MULTIPLE HEARTH FURNACE	83
FIGURE 7	TYPICAL SECTION OF A FLUID BED REACTOR	84
FIGURE 8	FLOWSHEET FOR SLUDGE INCINERATION IN A FLUID BED FURNACE	85
FIGURE 9	CODISPOSAL SYSTEM--PROCESS SCHEMATIC AND MATERIALS BALANCE	88
FIGURE 10	CARBORUNDUM'S TORRAX^{R} PYROLYSIS FACILITY	100
FIGURE 11	EFFECTS OF SLUDGE MOISTURE AND VOLATILE SOLIDS CONTENT ON GAS CONSUMPTION	107
FIGURE 12	RECOVERABLE HEAT FROM COMBUSTION OF SEWAGE SLUDGE	108
FIGURE 13	SLUDGE/REFUSE RATIO REQUIRED FOR SELF-SUSTAINING COMBUSTION	109
FIGURE 14	THERMODYNAMIC SYSTEM BOUNDARY ABOUT A TYPICAL THERMAL PROCESSING SYSTEM	110
FIGURE 15	POUNDS OF WATER TO BE EVAPORATED FOR EACH POUND OF DRY SOLIDS AS A FUNCTION OF THE PERCENT SOLIDS IN THE SLUDGE	113
FIGURE 16	FLASH DRYER SYSTEM	114
FIGURE 17	SCHEMATIC OF ROTARY DRYER	116
FIGURE 18	JACKETED HOLLOW--FLIGHT INDIRECT DRYER	117
FIGURE 19	ALTERNATIVES AVAILABLE FOR EXHAUST GAS DEODORIZATION AND PARTICULATE REMOVAL	118

Page

FIGURE 20	SLUDGE DRYING SYSTEM USING THE JET MILL PRINCIPLE--TOROIDAL DRYER	119
FIGURE 21	CARVER-GREENFIELD MULTI-EFFECT EVAPORATION PROCESS	121
FIGURE 22	FALLING FILM EVAPORATOR DETAILS	122
FIGURE 23	B.E.S.T. PROCESS FLOW SCHEMATIC	124
FIGURE 24	BASKET CENTRIFUGE SCHEMATIC DIAGRAM	132
FIGURE 25	SCHEMATIC OF TYPICAL SOLID BOWL DECANTER CENTRIFUGE	134
FIGURE 26	DISC TYPE CENTRIFUGE	135
FIGURE 27	THREE BASIC STAGES OF A BELT PRESS	138
FIGURE 28	BELT PRESS DEWATERING PROCESS	139
FIGURE 29	SCHEMATIC SIDE VIEW OF A RECESSED PLATE PRESSURE FILTER	141
FIGURE 30	PLATE-FRAME FILTER PRESS	142
FIGURE 31	CONVENTIONAL LOW PRESSURE FILTER PRESS SYSTEM	144
FIGURE 32	TYPICAL SLUDGE DRYING BED CONSTRUCTION	147
FIGURE 33	ROTARY DRUM VACUUM FILTER	149
FIGURE 34	SUMMARY OF EMISSIONS TESTS ON THE CONTRA COSTA MULTIPLE-HEARTH INCINERATOR	190
FIGURE 35	SUMMARY OF PARTICULATE EMISSIONS FROM TWO MUNICIPAL REFUSE INCINERATORS	191
FIGURE 36	SLUDGE MANAGEMENT FACILITY SITE EVALUATION MATRIX	197-201

SUMMARY

The Hudson Valley has seen substantial growth in the last 10 years. Accompanying residential, commercial and industrial development is resulting in increasing quantities of solid waste, sludge and septage needing treatment and disposal.

Sludge and septage have not been considered a serious management problem in most of the United States. Even today, many communities provide no or marginal treatment, and disposal is into convenient bodies of water or in landfills.

Stricter regulations, particularly in New York State, are forcing municipalities to plan for proper waste management. Previously, sludge went to landfills for disposal along with garbage. The New York State Department of Environmental Conservation's 1986 policy of forbidding new or expanded landfills over principal aquifers will severely limit the number of landfills available for both solid waste and sludge.

Likewise, as more emphasis is placed by New York State on cleaning up contaminated waterways and waste dumps, both sludge and septage need to be properly treated and disposed.

The Hudson Valley was particulary affected both by the more stringent state regulations and by the closing of two sludge disposal facilities: one at Stewart Airport operated by Monteco, and the Merion Blue Grass Sod Farm in Orange County.

These closings created a crisis for municipalities which now have to send their sludge and septage longer distances to disposal sites. It was this situation which caused seven counties in the region to ask the New York State Environmental Facilities Corporation to investigate alternatives for managing their sludge and septage. These counties are: Dutchess, Orange, Putnam, Rockland, Sullivan, Ulster and Westchester. They provided partial funding for this study through the Hudson Valley Regional Council and by offering in-kind services. The New York State Department of State provided the balance of funds.

This study looks at five management alternatives and recommends the applicability of each to the seven counties. In addition, it presents in-depth analyses of data provided by the counties for sludge quantity and quality, septage generation and disposal and disposal sites and practices for both types of waste. The report describes the current regulations applicable to the five alternatives and projects trends for regulatory policy based on conversations with state and federal officials. Finally, it presents information on developing and financing sludge management projects, and makes three types of recommendations: general to all counties, specific to each county, and by management alternative.

The following is a summary of the management and alternatives recommendations. A complete discussion of recommendations may be found in Section 7.

Management Recommendations

1. The seven counties should take immediate action to develop a regional sludge and septage management system.

2. The counties, by formal action of the county legislatures, should establish a permanent regional sludge management task force. Membership should include representatives of the counties and, where appropriate, local governments. Membership should also include individuals with technical competence and experience in sludge management.

3. The counties should consider retaining the Environmental Facilities Corporation to provide technical management services to the task force.

4. The counties should engage the Hudson Valley Regional Council to coordinate the activities of the task force.

Technical Recommendations

1. The seven counties should consider developing a regional integrated management plan for sludge encompassing three alternative technologies: incineration, land application, and landfill. One site could serve several purposes. A minimum of 200 acres would incorporate an incineration facility and a landfill. Land application, while a component of a management plan, could take place away from the integrated site by using active agricultural land. County studies have already identified a number of potential sites for land application. The next step would be to proceed with a detailed site selection process.

2. The amount of useful data presently available on the quality of sludge in the region is limited. As quality and, more particularly, the presence or absence of toxic materials is the major consideration for selecting alternative methods of disposal, this data must be obtained without delay. A regionally coordinated program should be instituted to provide necessary sampling and laboratory analysis. A minimum of six months of data must be included with an application to NYSDEC for a permit.

3. Land application of sludge is the preferred and least costly alternative. However, its use is limited to sludge containing no toxic materials. Land need not be acquired if cooperative agreements can be made with farmers. The chief benefit of land application is that it provides beneficial nutrients to the soil for non-food crops at no cost to the growers.

4. Incineration should be used for sludge containing toxic materials.

5. Composting of sludge holds promise for the future. EFC encourages the counties to implement composting on a limited or pilot scale. The composting project could be located at the regional integerated site.

6. Landfilling should be used only as a last resort and as a backup for other options.

7. Ocean disposal of sludge, presently used by one STP in the region, the City of Yonkers, is a low cost option. Ocean disposal could be considered for disposal of additional sludge in the region, but the availability of this option after 1991 cannot be predicted. USEPA policy is to grant a permit only if no other viable alternative exists.

8. Septage should be managed regionally through a system of designating specific STPs, on the basis of cost effectiveness and capacity to receive septage. These plants should be modified to provide necessary additions to treatment processes so that septage is not simply mixed with incoming sewage.

SECTION 1. INTRODUCTION

Background

In the spring of 1985, the Merion Blue Grass Sod Farm (Sod Farm), located near Middletown, and Monteco located at Stewart Airport, discontinued operation as sludge management facilities. The closure of these facilities left many municipalities in the Hudson Valley region without a disposal alternative for the increasing quantities of sludge generated by sewage treatment plants. The Sod Farm and Monteco operations developed against a background of limited available options for environmentally safe sludge disposal. New solid waste regulatory criteria promulgated in 1981 led to virtually all landfills in the region becoming ineligible for (New York State Department of Environmental Conservation (NYSDEC) approval. In addition, many smaller plants using septage disposal sites were prohibited from this practice by the new solid waste regulations coupled with more active enforcement.

The Monteco and Sod Farm operations sought to land apply sludge in compliance with NYSDEC regulations, and these alternatives initially gained wide acceptance in the region. As these facilities began to receive more and more sludge and septage, their ability to handle these residuals in an environmentally acceptable manner became severely taxed. The Stewart Airport Commission forced Monteco to close for lease violations, and the Sod Farm was shut down by NYSDEC for contravention of groundwater standards.

The near simultaneous closure of these facilities created a crisis situation in the region: sludge could not be removed from sewage treatment plants and homeowners could not get their septage tanks pumped. Both of these solid waste situations can have long range and serious ramifications to the quality of ground and surface waters if not promptly resolved.

In 1985, seven counties in the Hudson Valley--Dutchess, Orange, Putnam, Rockland, Sullivan, Ulster and Westchester--realized the severity of the sludge and septage disposal problem in their region and asked the New York State Environmental Facilities Corporation (EFC) to do a study of regional sludge management alternatives.

The counties, through the Hudson Valley Regional Council (HVRC), their official intergovernmental agency, contributed $35,000 in funds and $30,000 of in-kind services to the study. The New York State Department of State provided an additional $35,000 of coastal management monies.

The New York State Environmental Facilities Corporation which carried out this study, is a state public benefit corporation with extensive experience in planning, designing, financing, constructing, maintaining, operating, and providing advisory services to municipalities for pollution control projects. EFC's projects include wastewater treatment works and collection

systems, air pollution control facilities, water management facilities, storm water collection systems, and solid waste management facilities for resource recovery and industrial hazardous waste treatment, storage and disposal. EFC also provides loans, through the sale of its tax-exempt, special revenue bonds, to private industry to finance pollution control and solid waste management projects. Under another program, EFC assists industry in the reduction, reuse and recycling of industrial and hazardous wastes.

The Hudson Valley Regional Council formed in 1978, is the official intergovernmental agency serving the counties of the Hudson Valley. Its representation includes the county executives and county legislative chairmen plus at least one other publicly elected official from the seven counties.

Sludge Management in the Last Decade

An unprecendented level of sewage treatment plant (STP) construction occurred over the last decade, initiated by the federal Water Pollution Control Act of 1972 and aided by a federal construction grants program which provided funding up to a maximum of 75 percent of eligible project costs. New York State funded an additional 12 1/2 percent, bringing the maximum funding level to 87 1/2 percent of eligible project costs. In addition, state and federal laws mandated secondary and, in some cases, tertiary treatment levels to achieve water quality goals. This construction activity has redirected a continually increasing wastestream from the natural environment into the controlled environment of the sewage treatment plant.

Essentially, a sewage treatment plant separates wastewater into waste solids (sludge) and water, its basic components. Its ultimate function is to prevent the contamination of surface and groundwaters and avoid public health, environmental and aesthetic consequences of water pollution. A properly operating STP removes approximately 85 percent of pollutants and discharges a relatively clean effluent. The residual material, sludge, must then be managed in a manner that does not permit its uncontrolled reentry into the environment.

While increased awareness of surface water contamination stimulated STP construction, adequate approaches to proper disposal of increasing amounts of sludge have lagged. Currently, firm plans for sludge disposal are required by regulatory agencies during the facility development stage of STP projects. In the past, however, disposal of sludge, a solid waste, was not recognized as a significant problem, and co-disposal with other solid waste streams, generally at local landfills, was taken for granted. As sludge quantities increased, ultimate disposal of this material presented problems that stimulated research to develop acceptable disposal strategies and techniques. The disposal problems, also, prompted an increasing number of laws and regulations. Now, the implementation of solid waste disposal options has significantly lagged behind the generation of sludge because:

- appropriate regulations have only recently been developed
- the extensive level of environmental safeguards dictated by New York State and federal regulations contribute to the high cost of sludge disposal projects
- funding programs have not been available to stimulate project construction.

Description of this Study

This study presents the following information:

- An inventory of municipal sludge and septage in the seven county region
- A projection of additional sludge generation in the region based on present and projected population
- An overview of current and planned sludge management activities in the region
- Specific recommendations for alternative management technologies
- Recommendations for funding mechanisms available to construct and operate future facilities
- Recommendations for potential regional locations for sludge management facilities
- Evaluation of the cost and benefits associated with each recommendation.

Scope of Work

The contract with HVRC and the Department of State (DOS) requires that EFC perform specific tasks:

A. Prepare a written report containing:

- Existing data on the quantity and quality of sludges and domestic septage
- A description of existing reports and studies prepared for the counties
- Population and transportation data
- Information about present and planned sludge disposal methods in the seven counties

- Information on major sludge treatment and disposal technology alternatives: land based (composting, land application, landfill) thermal reduction and ocean disposal

- Information about existing and former sludge and septage management sites

- A discussion of existing and potential grants and other prospective sources of funding, and financial and technical assistance

- Legal, financial and institutional mechanisms for alternative management approaches

- A description of current federal and state regulations and potential trends for the future

- Criteria for siting specific types of management facilities.

B. Provide technical assistance by:

- Meeting with county, HVRC and Department of State representatives each month

- Assisting with press releases and public participation, including public information meetings on the contents of the report

- Coordinating with USEPA, Department of State, New York State Department of Environmental Conservation, county and other state agencies to obtain their input

- Meeting with the New York State executive department and members of the legislature.

The complete Scope of Work is described in Appendix A.

EFC and NYSDEC Project Staff

Terence P. Curran, P.E., Executive Director had overall project management responsibility for EFC. Administration was provided by Pickett T. Simpson, P.E., Manager of Hazardous Waste Programs and Diana M. Hinchcliff, Executive Assistant to Mr. Curran. Ms. Hinchcliff edited this report. Kenneth F. Malcolm was the project manager with day-to-day responsibility for implementation. Peter A. Marini, P.E., Marian J. Mudar and J. Andrea Estus assisted with writing sections of the report. William H. Holmes, President, Holmes Brothers, Inc., William B. Pressman, P.E., and Joseph E. Silber, P.E. provided consultant services. Mary Johnson Blass typed the many drafts and the final report assisted by Donna Melcher.

NYSDEC officials participated actively in the task group by attending many of the group meetings as well as by reviewing draft sections of this report for regulatory accuracy. NYSDEC was particularly helpful in providing data in addition to that furnished by the counties, and offering suggestions for project implementation. Thomas Easterly, P.E., Section Chief, Division of Solid and Hazardous Waste, Albany, and Edward Cassidy, P.E., Solid Waste Engineer, Region 3, were especially helpful.

Technical Task Group

To provide EFC with adequate information about regional and local problems as well as technical experience, one technical represenative from each county plus a project auditor from the Hudson Valley Regional Council were appointed to a task group. County members were:

DUTCHESS COUNTY	Robert Vrana, Commissioner Solid Waste Management
ORANGE COUNTY	Matthais Schleifer, Assistant Commissioner Health Department
PUTNAM COUNTY	Anne Bittner, Assistant Public Health Engineer Division of Environmental Health Services
ROCKLAND COUNTY	Charles Stewart, Executive Director Rockland County Sewer District No.1
SULLIVAN COUNTY	John Fink, Engineering Supervisor Department of Public Works
ULSTER COUNTY	Dean Palen, Director of Environmental Sanitation Health Department
WESTCHESTER COUNTY	Peter Eschweiler, Commissioner Department of Planning
HUDSON VALLEY REGIONAL COUNCIL	Hildegard Frey Economic Development Coordinator

Additional representation was provided by the counties where it was appropriate for a specific purpose.

Task Group Activities

The task group initially focused on providing basic data on sludge and septage generation and disposal practices for EFC staff to use in developing computer programs to characterize the present situation. This information was used by EFC to forecast the future and develop disposal options possible under assumed conditions.

Monthly meetings were held at various locations in the study region. These meetings provided an opportunity for discussion of the data submitted by the county representatives as well as a forum for discussion of EFC's use of this data, and the conclusions, in terms of available options, that the data yielded.

Midway through the study period, the meetings focused on specific disposal alternatives. Generally, these meetings were highlighted by EFC's informal presentation of a disposal option, composting, for example, followed by a discussion among all present. Draft sections of the report were distributed and copies mailed to those not in attendance, with the request that the material be reviewed and comments returned within a prescribed time. The comments were then incorporated into the evolving report.

To aid in its deliberations, the task group visited the Glen Cove, Long Island, resource recovery project where sludge is co-incinerated with municipal solid waste for heat recovery and electricity generation, and the Hoboken, New Jersey plant, where an oxyozosynthesis* process is used to stabilize sludge.

* Oxyozosynthesis is a stabilization process using oxygen and ozone which results in a highly dewaterable sludge.

SECTION 2. DATA COLLECTION AND ANALYSIS

Introduction

Three computer programs were developed during this study to collect and evaluate data provided by the counties. This data yielded three inventories: sludge inventory, septage hauler inventory and disposal site inventory. The Sludge Management Inventory contains information about the sludge generated by sewage treatment plants in the region including quantity, quantity flows and processes. The Septage Hauler Inventory presents names of haulers, disposal site locations and quantities hauled. The Disposal Site Inventory provides names of disposal sites, quantities of refuse, sludge and septage disposed of annually at the sites, methods of disposal and sizes of the sites.

Difficulties With Collecting Data

Sufficient data to adequately characterize the quantity and quality of sludge and septage is not presently available from the generators in the area addressed by this study. EFC believes this is consistent with the situation throughout New York State as well as the United States as a whole.

This absence of critical data results from: a) the lack of regulatory requirements, and b) little or no awareness at the municipal planning level of the importance to proper sludge management of accurate data. Effluent at sewage treatment plants is monitored closely because of regulatory emphasis on water quality, but attention to solid waste generated by wastewater treatment is a lower priority. Without a regulatory mandate or a change in perception on the part of municipalities, this situation is likely to continue.

The inconsistency of the data does not allow EFC to estimate sludge quality for this report with any degree of confidence. Neither is it possible to be specific about the size of sludge management facilities nor to determine appropriate equipment needs.

EFC encountered some common problems while attempting to obtain data:

1. Most STPs do not maintain a proper accounting of sludge quantities removed from municipal sewage treatment plants. Quantities removed for disposal should be characterized in terms of dry tons. While a plant does not dispose of dry tons of sludge, per se, this is a common denominator when considering management options and may be readily calculated if accurate records are kept in terms of gallons or cubic yards and percent solids or total solids. This is especially a problem with the smaller facilities (less than one million gallons per day).

2. With a few exceptions, analyses for sludge quality (heavy metals, toxics, potential plant nutrients, and heating values) are not done with a frequency that would adequately characterize these parameters for a given residual. When EFC reviewed the data supplied by the counties (Table 1), many plants kept no information and others had conflicting data. Periodic analyses conducted over a period of time (at least six months) would be necessary to accurately determine sludge quality. Because of the high level of concern for environmental quality reflected by tight regulatory controls, specific sludge management planning efforts cannot go beyond the theoretical stage without adequate quality data.

3. A substantial percentage of the sludge generated in the region contains high levels of copper. In some cases the sources of copper have been investigated but have not been found. Industrial discharges do not seem to be the source of this contaminent. Suggested sources are high background levels of copper in water supplies or extraction of copper from plumbing systems by corrosive action. As sludge contaminated by copper or other restricted substances severely limits disposal options, EFC recommends that the source of this problem be determined and an approach developed that will either eliminate or provide proper disposal of the contaminent from the waste stream.

4. The spectrum of sludge disposal alternatives includes land application, landfilling, composting, incineration, and ocean disposal. Contaminated sludge, i.e. exceeding New York State Department of Environmental Conservation guidelines, cannot be applied to land or composted. As long as the sludge cannot be classified as a hazardous waste, it may be landfilled, although landfill space is limited and new regulations make landfills a costly option. While ocean disposal is not restricted to sludge of a certain quality, the fate of this option after the current five year interim review period is uncertain. Ocean disposal may be discontinued altogether or new criteria may be developed for sludge quality. At this point, the best alternative for disposal of a contaminated sludge appears to be incineration. However, air quality standards for incinerating sludge are in a state of flux and a concentration of contaminents in incinerator ash can create additional disposal considerations.

   Sludges containing contaminents will face more and more restrictions and have fewer and fewer disposal options. Presently, the most prudent course of action appears to be removal of the contaminents from the waste stream by means of pretreatment programs or other methods.

Verification of Sludge Quantities

While reviewing data submitted by the counties, EFC noticed apparent inaccuracies in sludge quantities reported. A method was needed by which to determine what actual quantities ought to be. The current literature was reviewed in an effort to find a factor, or multiplier, by which actual quantities could be estimated (see Appendix B). Based on available information, a factor of 0.692 dry tons/million gallons (dt/mg) was used. This fctor was multiplied by the daily dry flow of a sewage treatment plant (STP) times 365 days/year as in this example:

$$0.692 \text{ dt/mg} \times 9 \text{ mg (dry flow)} \times 365 \frac{\text{days}}{\text{yr}} = 2{,}273.22 \frac{\text{Dry Tons}}{\text{yr}}$$

This verification calculation was made for the data submitted for each STP as well as for each county's total and the grand total for all counties. The difference between reported and calculated values was computed, as well as a "reliability factor" (F) of reported vs. calculated. A reliability factor of 1 would indicate agreement in reported and calculated values; 0.5 would indicate one-half the quantity calculated was reported; 2.00 would indicate twice the quantity calculated was reported, and so on. A summary of these calculations is shown in Table 1.

TABLE 1

Verification of Sludge Quantities
(all quantities are in dry tons/year)

	Calculated	Reported	Difference	F
DUTCHESS	3,620	3,289.4	+ 330.6	.91
ORANGE	5,670	4,844.9	+ 825.1	.85
PUTNAM	402	294.5	+ 107.5	.73
ROCKLAND	7,800	5,464.7	+ 2,335.3	.70
SULLIVAN	1,803	1,726.6	+ 76.4	.96
ULSTER	2,284	1,360.3	+ 923.7	.60
WESTCHESTER	31,540	18,727.0	+12,813.0	.59
GRAND TOTAL	53,119	35,707.4	+17,411.6	.67

Although Dutchess and Sullivan counties show close agreement between reported and calculated values, individual differences within those counties are sometimes substantial. This indicates some STPs overestimated while others underestimated quantities generated.

EFC realized early that this situation was occurring and held lengthy discussions with county techical representatives at monthly meetings. In an effort to get data with a higher reliability factor, copies of each county's data were distributed to each representative for verification. The figures above reflect that effort.

This situation creates a data reliability problem which is especially critical when sludge quality is considered. Incorrect quantities or proportions of clean to contaminated sludges may lead to unjustifiably favoring one management alternative over another.

The reader should consider all data presented in this section and throughout this study as approximate. As the seven-county region encompasses 154 treatment plants, 76 disposal sites and 86 septage haulers, a case-by-case analysis to verify data was obviously not practical considering the constraints of time and available funding.

EFC recommends that the counties develop programs to monitor sludge quantity produced at each STP, quantities of septage generated in each county, quantities of sludge and septage deposited at all disposal sites within the region, and sludge quality at all STPs (heavy metal concentrations and EP toxicity). An appropriate routine testing schedule should be developed based on the findings of the initial analysis and the size of the facility. Such analyses should be conducted at least once per year.

SLUDGE MANAGEMENT INVENTORY

Municipal Sludge Solids Concentration

Sewage treatment separates the components of sludge: solids and liquid water. The water is used merely as a means to transport the waste from the point of origin to the sewage treatment plant. The normal solids concentration in wastewater is on the order of 200 parts per million (ppm) or 0.02 percent. Effective wastewater treatment will increase this concentration to approximately 20 percent. The 20 percent solids concentration is a minimum for sludge to be accepted at a landfill, for cost-effective composting, and for cost-effective incineration.

As shown in Table 2, approximately two-thirds of the sludge presently generated does not meet the minimum of 20 percent solids. Seventy-five percent of the STPs in the region cannot dewater sludge to this minimum level.

TABLE 2

	Number of STPs	Percent of Total STPs	Number of Tons*	Percent of Total Tons
≥ 20% Solids	40	26	13,113	37
< 20% Solids	114	74	22,594	63
TOTALS	154	100%	35,707	100%

* Tons are in dry tons

≥ greater than or equal to

< less than

Methods of Sludge Dewatering

Sludge is dewatered to reduce transportation costs from the STP to the ultimate disposal site as well as to provide enhanced opportunities for disposal. Presently, the only disposal options for liquid sludge are land application or ocean disposal. All other major disposal alternatives -- landfill, composting, incineration--require some dewatering.

Table 3 enumerates the types of dewatering equipment used in the region, their frequency of usage, and the amount of sludge they dewater. The information in this table may be considered an inventory of dewatering equipment in the region. The type of dewatering equipment is generally a major determining factor in solids concentration or sludge drying capability. For example, if an incineration alternative is considered and the process selected requires a 25 percent solids concentration (75 percent moisture), some idea of the capability of meeting this requirement can be obtained by consulting this inventory.

The most significant factor revealed by the sludge dewatering inventory is that 43 percent of the sludge generated in the region is not dewatered. Sludge which is not dewatered has limited disposal potential as well as the potential for creating an extra cost burden if significant transportation is necessary.

TABLE 3

Method	Number of STPs	Percent of Total STPs	Number of Tons*	Percent of Total Tons
Vacuum Filter	9	6	10,472	29
Centrifuge	8	5	3,828	11
Air Drying	41	27	2,443	1
Belt Press	6	4	1,810	5
Filter Press	3	2	1,557	4
Sludge Lagoon	1	1	220	1
Vacuum Drying Beds	1	1	67	1
Total Dewatered	69	46%	20,397	58%
Not Dewatered	85	54%	15,310	42%
TOTALS	154	100%	35,707	100%

* Tons are in dry tons

Methods of Sludge Stabilization

Sludge stabilization reduces the organic material present in sludge which in turn reduces the potential for odors. Stabilization, in addition, significantly reduces the number of possible disease-causing agents (pathogens) to acceptable levels. Depending on the ultimate use or disposal method of the sludge, a process to further reduce pathogens may be required (see Section 3 for more information).

An inventory of the sludge generated in the region based on the stabilization methods employed is provided in Table 4. This will help determine the suitability of a sludge for a particular disposal method. Of particular interest here is that 30 percent of the sludge generation sites (STPs) which account for 18 percent of the sludge generated have no stabilization process. Unstabilized sludge may not be landfilled or land applied, but may be composted, ocean disposed, or incinerated.

TABLE 4

Method	Number of STPs	Percent of Total STPs	Number of Tons*	Percent of Total Tons
Stabilized				
Anaerobic Digestion	51	33	18,326	51
Lime Addition	6	4	5,051	14
Aerobic Digestion	46	30	2,929	8
Zimpro+	1	1	3,080	9
Air Drying	4	3	209	1
Total Stabilized	108	71%	29,595	83%
Not Stabilized	46	29%	6,112	17%
TOTALS	154	100%	35,707	100%

+ Zimpro is a wet air oxydation system used only at one site in New Rochelle, Westchester County.

* Tons are in dry tons

Methods of Disposing of Sludge

Table 5 characterizes present methods employed by STPs in the region to dispose of sludge.

Ocean disposal accounts for the majority of sludge disposed in the region. The Yonkers plant, producing about one-third of all sludge in the region, uses this method. Composting, land application and other methods account for a very small proportion of sludge disposal.

TABLE 5

Method	Number of STPs	Percent of Total STPs	Number of Tons*	Percent of Total Tons
Ocean Disposal	3	2	12,615	35
Incineration	8	5	9,852	28
Landfill	45	29	10,688	29
Land Application	11	7	412	1
Scavenger Hauling+	62	40	649	2
Composting	10	7	947	3
Stockpiled on Site+	7	5	349	1
Treatment Lagoon	6	4	195	1
Other	2	1	0	0
TOTALS	154	100%	35,707	100%

+ Although stockpiling and scavenger hauling are not disposal methods, per se, these quantities are included for accounting purposes.

* Tons are in dry tons

Sludge Quality

For purposes of this study, EFC has assigned letters designating certain levels of sludge quality based on the level of contamination present. Basically, "A"-rated sludge may be considered **clean**, "C"-rated sludge is **contaminated** (land application or composting options are prohibited), and "D"-rated sludge is **somewhat contaminated** and may be used with certain restrictions. See Figure 1 (page 16) for specific quality guidelines. Quality limits occur in NYSDEC regulations for land application and composting. These quality limits are used to provide some relative criteria for evaluating disposal alternatives. Currently, no contaminent limits exist for incineration or ocean disposal. Landfill limits for sludge disposal are based on hazardous waste regulations, i.e. sludge that does not exceed hazardous waste limits may be landfilled. No sludge analysis reviewed during the course of the study exceeded hazardous waste limits.

Approximately 70 percent of the sludge generated in the region is analyzed to some degree for quality. However, as previously mentioned, consistent schedules of analysis are not maintained by the STPs, making accurate data evaluation impossible. Nineteen percent was rated "A", 8 percent of the sludge was rated "C", 42 percent was rated "D".

TABLE 6

Rating	Number of STPs	Percent of Total STPs	Number of Tons*	Percent of Total Tons
Rated				
A	22	14	6,596	19
C	11	7	2,873	8
D	18	12	15,026	42
Total Rated	51	33%	24,495	69%
No Rating	103	67%	11,212	31%
TOTALS	154	100%	35,707	100%

* Tons are in dry tons

Figure 1

EFC SLUDGE QUALITY EVALUATION CRITERIA

A-Rated <u>Acceptable Quality for Land Application or Composting of Sludge</u>

- Metal content below DEC guidelines as contained in "Solid Waste Management Facility Guidelines" (5/81).
- Less than 10 parts per million (ppm) PCB concentration.
- Has not been subjected to chlorine oxidation process.
- Negative EP Toxicity analysis.
- Requires process to significantly reduce pathogens (PSRP).

C-Rated <u>Toxic Prohibition - Not Acceptable for Land Application or Composting</u>

- Metal content more than twice NYSDEC guidelines.
- Greater than 10 ppm PCB concentration.
- Sludge treatment by chlorine oxidation system.
- Positive EP toxicity analysis.

D-Rated <u>Acceptable for Use on a Dedicated Site Only</u>

- All criteria in "A" are met with exception of metal concentration.
- Metal content between 1 and 2 times NYSDEC guidelines.
- NYSDEC variance required.

Size of Treatment Plants in the Region

This inventory was prepared to provide a perspective on the size of treatment plants relative to the relative quantity of sludge generated. The amount of flow for which a sewage treatment plant is designed is generally based on population estimates in the wastewater service area plus the specific amounts of sludge which significant industrial and commercial dischargers will send to the plant.

Design flow analyses indicate that although 77 percent of the plants in this region treated less than 1 million gallons/day (mgd) of sludge, they accounted for only six percent of the sludge produced. One plant (Yonkers) accounts for almost one-third of the sludge produced in the region. Plants greater than five mgd (10 percent of the total number) account for 75 percent of the sludge produced.

TABLE 7

Plant Size	Number of STPs	Percent of Total STPs	Number of Tons*	Percent of Total Tons
< 1 mgd	118	76	2,200	6
1-5 mgd	22	14	6,850	19
5-10 mgd	9	6	9,984	28
10-50 mgd	4	3	5,745	16
> 50 mgd	1	1	10,928	31
TOTALS	154	100%	35,707	100%

> greater than
< less than

* Tons are in dry tons

Treatment Processes Used by STPs

The activated sludge process is predominant in this region and is used at plants generating 71 percent of the sludge. Fixed media systems (trickling filters and rotating biological contactors) are used for over one-fifth of the sludge generated. All other processes account for only nine percent of the total sludge generated.

TABLE 8

Process	Number of STPs	Percent of Total STPs	Number of Tons*	Percent of Total Tons
Activated Sludge	65	42	25,807	72
Fixed Media	51	33	7,183	20
Primary Treatment	12	8	2,411	7
Septic Tank	20	13	103	1
Other	6	4	204	1
TOTALS	154	100%	35,707	100%

* Tons are in dry tons

Industrial Flow to Treatment Plants

Industrial flow information provides some indication of present and future potential for an impact on sludge quality from industrial discharges. The data displayed in Table 9 shows that while only 24 percent of the STPs receive industrial flow, these facilities account for 86 percent of the sludge generated. Thus, the potential for industrial contamination is high. However, only a small percentage of the STPs' total flow is industrial, making surveillance requirements manageable.

TABLE 9

Industrial Flow as a Percent of Total Flow	Number of STPs	Percent of Total STPs	Number of Tons*	Percent of Total Tons
1-5%	17	11	21,400	60
5-10%	3	2	984	3
10-20%	7	5	2,062	6
20% +	9	6	6,000	17
Total Industrial Flow	36	24%	30,446	86%
No Industrial Flow	118	76%	5,261	14%
TOTALS	154	100%	35,707	100%

* Tons are in dry tons

SEPTAGE HAULER INVENTORY

Septage Generation

No analyses of septage solids concentrations could be provided by the counties. USEPA studies indicate that four percent is an appropriate concentration to use when designing facilities. However, EFC's studies showed a high variability for the four percent parameter when using it to balance reported quantities received and disposed. EFC's investigations led to its conclusion that septage concentrations in the region were apparently about two or two and one-half percent rather than the four percent suggested by USEPA. The dry tons calculated here reflect an average value of 2.4 percent.

TABLE 10

Number of Haulers:	86
Total Quantity:	73,000,000 gallons*
Total Dry Tons:	10,592+
Solids Concentration:	2.4 percent (average)

* Information supplied by septage haulers
\+ Calculated by EFC based on quantity information from haulers

Methods of Septage Disposal

Approximately one-quarter of the septage generated in the region is hauled to sewage treatment plants for further treatment and disposal. The majority of this material is discharged to the Yonkers plant via the "Hawthorne Manhole". Approximately 28 percent is composted by a single hauler. Land application accounts for 12 percent of septage disposal regionwide.

TABLE 11

Method	Number of Tons*	Percent of Tot. Tons	Number of Gallons (Million)	Percent of Tot. Gallons	Number of Haulers	Percent of Total Haulers
Land Application	1,220	12	7.315	10	10	12
Composting	3,002	28	18.000	25	1	1
At Treatment Plant	2,506	23	24.510	34	50	58
Lagoon	601	6	3.600	5	10	12
Subtotals:	7,329	69%	53.425	74%	71	83%
No Method Given	3,263	31%	19.575	26%	15	17%
TOTALS	10,592	100%	73.000	100%	86	100%

* Tons are in dry tons

SLUDGE AND SEPTAGE DISPOSAL SITES AND PRACTICES INVENTORY

EFC took an inventory of sludge and septage disposal sites and practices to define the present situation in the seven county region. Table 12 gives an overview of sludge and septage disposal. Table 13 display sludge and septage disposal practices for the region as a whole. Tables 14 through 20 show the same information for each county separately. Information about specific disposal sites has been given to each county by EFC.

TABLE 12

SLUDGE AND SEPTAGE DISPOSAL SITES INVENTORY

Numer of Sites:	90
Total Septage Disposal:	7,200 dry tons/year
Total Sludge Disposed:	34,122 dry tons/year
Total Sludge and Septage:	41,322 dry tons/year

(This data provided by the counties)

TABLE 13

METHODS OF SLUDGE AND SEPTAGE DISPOSAL
(Total for All Counties)

Method	Number of Tons	Percent of Total Tons	Number of Sites	Percent of Total Sites
OCEAN DISPOSAL	14,076	34	1	1
LANDFILL	10,684	26	37	42
INCINERATION	10,107	24	5	6
COMPOSTING	2,764	7	4	4
LAGOON	2,141	5	22	24
TREATMENT PLANT	715	2	4	4
LAND APPLICATION	816	2	12	13
TRANSFER STATIONS*	0	0	5	6
TOTALS	41,322	100%	90	100%

* Transfer stations accept only refuse at this time. If properly equipped, transfer stations could accept sludge and septage. However, these stations are not ultimate disposal sites but only convenient collection locations to make transportation more economical. Only Dutchess County supplied information on transfer stations. This information from the other counties is necessary to plan future disposal alternatives.

Methods of Sludge and Septage Disposal by County

DUTCHESS COUNTY

All disposal options considered in this study are used by Dutchess with the exception of ocean disposal. This is a somewhat unique situation as most counties use only two or three options. Using several, small-scale options could prove helpful to Dutchess and the other counties in considering future disposal activities because it is easier to expand existing operations than to create new ones.

TABLE 14

Method	Number of Tons*	Percent of Total Tons	Number of Sites	Percent of Total Sites
OCEAN DISPOSAL	0	0	0	0
LANDFILL	1,515	21	13	45
INCINERATION	1,885	25	2	7
COMPOSTING	2,252	31	1	4
LAGOON	851	12	3	11
TREATMENT PLANT	608	8	1	4
LAND APPLICATION	183	3	3	11
TRANSFER STATIONS	0	0	5	18
TOTALS	7,294	100%	28	100%

Total Sludge: 3,284
Total Septage: 4,010

28 sites

* Tons are in dry tons

ORANGE COUNTY

Most sludge in Orange is sent to the Orange County Landfill. A small amount is lagooned with septage at a few sites but this practice does not qualify for a permit under NYSDEC regulations. Land application is practiced at three sites using septage alone.

TABLE 15

Method	Number of Tons*	Percent of Total Tons	Number of Sites	Percent of Total Sites
OCEAN DISPOSAL	0	0	0	0
LANDFILL	3,930	79	5	29
INCINERATION	0	0	0	0
COMPOSTING	0	0	0	0
LAGOON	781	16	9	53
TREATMENT PLANT	0	0	0	0
LAND APPLICATION	225	5	3	18
TOTALS	4,936	100%	17	100%

Total Sludge: 4,038 tons[1]
Total Septage: 898 tons[2]

* Tons are in dry tons

[1] In addition to the 4,038 dry tons of sludge shown above, Orange County reports that 415 dry tons are being held or disposed of on-site and 45 dry tons are being transported to New Jersey.

[2] As specific disposal site information was not provided for Orange County septage, the following information was provided by the county and is included here at its request:

Disposal Site Type	Septage Quantity (Dry Tons)
STP	392
Lagoons	309
Land Application	651
Composting (Dutchess County)	250
	1,602

PUTNAM COUNTY

As most of the sludge generated in Putnam is sent out of the county for disposal, and most of the septage is transported by out-of-county haulers, it is difficult to match the quantities of septage generated with the sludge disposed in the county. Malcolm Pirnie, in a 1981 report, estimated that about 315 tons of sludge and 666 tons of septage (4.7 million gallons at 3.4 percent solids) are generated within the county.

Most septage in the county is disposed in the ocean. The Cold Spring plant disposes of air dried sludge at the Phillipstown Landfill.

TABLE 16

Method	Number of Tons*	Percent of Total Tons	Number of Sites	Percent of Total Sites
OCEAN DISPOSAL	0	0	0	0
LANDFILL	26	20	4	44
INCINERATION	0	0	0	0
COMPOSTING	0	0	0	0
LAGOON+	0	0	2	23
TREATMENT PLANT	107	80	3	33
LAND APPLICATION	0	0	0	0
TOTALS	133	100%	9	100%

Total Sludge: 130 tons
Total Septage: 3tons

+ There are two closed lagoon sites in the county.

* Tons are in dry tons

ROCKLAND COUNTY

Rockland uses incineration at the Orangetown STP to dispose of just over half the sludge generated in the county. Forty-three percent goes to the Haverstraw Landfill. A small site located in Ramapo applies to land approximately 200 tons per year of sludge.

The majority of septage generated in Rockland is ocean disposed or goes out of state to the Parsippany Landfill in New Jersey.

TABLE 17

Method	Number of Tons*	Percent of Total Tons	Number of Sites	Percent of Total Sites
OCEAN DISPOSAL	0	0	0	0
LANDFILL	2,453	43	1	33.33
INCINERATION	3,021	53	1	33.33
COMPOSTING	0	0	0	0
LAGOON	0	0	0	0
TREATMENT PLANT	0	0	0	0
LAND APPLICATION	200	4	1	33.33
TOTALS	5,674	100%	3	100%

Total Sludge: 4,455 tons
Total Septage: 219 tons

* Tons are in dry tons

SULLIVAN COUNTY

Sullivan County depends primarily on landfill to dispose of sludge. A small amount of sludge and septage is land applied and composted at six sites in the county. One plant (Liberty) is stockpiling sludge due to the lack of either a dewatering or stabilization process available at the plant site. Approximately one-half the septage generated in Sullivan is disposed outside the county.

TABLE 18

Method	Number of Tons*	Percent of Total Tons	Number of Sites	Percent of Total Sites
OCEAN DISPOSAL	0	0	0	0
LANDFILL	1,609	78	4	31
INCINERATION	0	0	0	0
COMPOSTING	30	2	2	15
LAGOON	227	11	2	15
TREATMENT PLANT	0	0	0	0
LAND APPLICATION	169	8	4	31
STOCKPILED	20	1	1	8
TOTALS	2,055	100%	13	100%

Total Sludge: 1,728 tons
Total Septage: 327 tons

* Tons are in dry tons

ULSTER COUNTY

All sludge in Ulster County is landfilled at various town facilities. All Ulster's septage is lagooned at private sites or hauled to STPs.

TABLE 19

Method	Number of Tons*	Percent of Total Tons	Number of Sites	Percent of Total Sites
OCEAN DISPOSAL	0	0	0	0
LANDFILL	1,151	80	9	60
INCINERATION	0	0	0	0
COMPOSTING	0	0	0	0
LAGOON	282	20	6	40
TREATMENT PLANT	0	0	0	0
LAND APPLICATION	0	0	0	0
TOTALS	1,433	100%	15	100%

Total Sludge: 1,151 tons
Total Septage: 282 tons

* Tons are in dry tons

WESTCHESTER COUNTY

Westchester generates and disposes of about 50 percent of the sludge and septage in the region. Approximately 70 percent of this material is sent from the Yonkers STP to be disposed of in the ocean. Incineration is used to dispose of sludge and septage from two plants which represent one-quarter of the region's total. There are land application and composting projects at two other facilities in the county.

TABLE 20

Method	Number of Tons*	Percent of Total Tons	Number of Sites	Percent of Total Sites
OCEAN DISPOSAL	14,076	71	1	20
LANDFILL	0	0	0	0
INCINERATION	5,201	26	2	40
COMPOSTING	482	2	1	20
LAGOON	0	0	0	0
TREATMENT PLANT	0	0	0	0
LAND APPLICATION	38	1	1	20
TOTALS	19,797	100%	5	100%

Total Sludge: 18,336 tons
Total Septage: 1,461 tons

* Tons are in dry tons

POPULATION PROJECTIONS AND FUTURE WASTE QUANTITIES

Introduction

Sludge and septage management facilities planned today must be designed to accommodate wastes generated by a population anticipated in the year 2000.

Facilities are commonly designed for a 20 year life. As information on population projections for 2005 was not available, the year 2000 is used in the accompanying table.

This section presents 1985 population data and projects population to the year 2000 to forecast future waste quantities and aid in designing management facilities.

Explanation of Table

Table 21 of this section displays the sewered and unsewered population of each county for the years 1985 and 2000. The percentages in the table were provided by the county technical representatives.

From the information in Table 21, EFC estimated that each person in the region generates 117 gallons of septage per year. This figure is somewhat higher than the average per capita septage generation rate of 60 gallons recommended by USEPA for planning and design.[1] It should be noted, however, that the regional rate probably includes some commercial and institutional wastes which EPA recommends adding to the average design rate. For the purposes of this report, septage generation rate of 120 gallons per capita per year has been used to project the year 2000 total septage quantity of 71.81 million gallons per year.

The table also shows sludge production in 1985 of 35,707 dry tons per year or an average for the region of 0.46 dry tons per million gallons of sewage waste treated. This sludge production rate is dependent on plant processes and will probably increase in the future due to modifications in treatment processes and more efficient operation of STPs. In projecting the sludge quantities, a production rate of 0.692 tons per million gallons of waste flow was used. This is based on the calculations contained in Appendix B.

1 "Handbook: Septage Treatment and Disposal", EPA 1984

The ratio of sewered to unsewered population is expected to increase from 1985 to the year 2000. This will result in a 10.6 percent increase in sludge production from 35,707 dry tons per year presently to 39,492 dry tons per year in 2000. A corresponding 1.62 percent decrease in septage production from the present 72.99 million gallons per year to 71.81 million gallons per year in 2000 is projected.

The impact of the 10.6 percent increase in sludge production must be taken into consideration in implementing a sludge management plan. The slight 1.62 percent decrease in projected septage quantities may be ignored for future planning purposes.

TABLE 21

POPULATION DATA
1985

	Total Pop.	% Sew.	Pop. Sewered	% Un-Sew.	Pop. Unsewered	Sludge Ton/year	Septage Mil. Gal.
DUTCHESS	256,563	40	102,625	60	153,938	3,289.4	25.9
ORANGE	275,152	60	165,091	40	110,061	4,844.9	10.6
PUTNAM	80,852	15	12,128	85	68,724	294.5	0.002
ROCKLAND	267,276	93	247,765	7	19,511	5,464.7	11.4
SULLIVAN	67,710	45	30,471	55	37,240	1,726.6	3.48
ULSTER	163,135	37	60,360	63	102,775	1,360.3	2.67
WESTCHESTER	870,723	85	740,115	15	130,608	18,726.7	18.97
TOTAL:	1,981,411	69	1,358,555	31	622,857	35,707.1	73.022

SOURCE: New York State Water Quality Mangement Plan
New York State Department of Commerce, September 30, 1985

POPULATION PROJECTIONS
2000

	Total Pop.	% Sew.	Pop. Sewered	% Un-Sew.	Pop. Unsewered	Sludge Ton/year	Septage Mil. Gal.
DUTCHESS	290,541	45	130,744	55	159,797	3,302.3	19.17
ORANGE	329,109	70	230,376	30	98,733	5,818.8	11.84
PUTNAM	96,695	38	36,744	62	59,951	928.1	7.19
ROCKLAND	315,529	96	302,908	4	12,621	7,650.8	1.51
SULLIVAN	74,159	45	33,372	55	40,787	842.9	5.74
ULSTER	178,283	50	89,142	50	89,141	2,251.5	10.69
WESTCHESTER	870,883	85	740,251	15	130,632	18,697.2	15.67
TOTAL:	2,155,199	73	1,563,537	27	591,662	39,491.6	71.81

SOURCE: New York State Water Quality Mangement Plan
New York State Department of Commerce, September 30, 1985

SECTION 3. TECHNICAL ALTERNATIVES FOR SLUDGE MANAGEMENT

INTRODUCTION

Five technical alternatives for sludge management are presented in this section: sanitary landfill, composting, land application, ocean disposal and thermal reduction. Each technology is described in detail and associated requirements for implementing the technology are discussed. A comparison of the relative cost of each alternative is provided. This section also includes other considerations common to all the alternatives: dewatering and transportation. EFC reviewed available engineering studies prepared for each of the counties to gain a background on past recommendations for sludge and septage management. A summary of these reports is given in this section.

SANITARY LANDFILL

Requirements for Disposing of Sludge in a Landfill

Disposal of municipal sludge and septage in a sanitary landfill is regulated by the New York State Department of Environmental Conservation (NYSDEC), through Part 360 and NYSDEC's "Solid Waste Management Facility Guidelines". The guidelines define these requirements for a sanitary landfill in New York State to accept sludge:

1. Sewage sludge must be dewatered to a minimum of 20 percent solids by weight and be digested or otherwise stabilized so it is not odorous;

2. The proportion of sludge (wet weight) accepted at a landfill should not exceed 25 percent of the total weight of municipal solid waste with which it is to be mixed unless leachate monitoring treatment and collection is provided;

3. NYSDEC must approve the type, quantity, and general quality of the sludge to be accepted at the site;

4. NYSDEC will approve a "sludge only" landfill under specific conditions set forth in the regulations and guidelines.

Where municipal sludge and municipal refuse will be mixed in a landfill, the quantity of sludge which may be received at that landfill depends on the quantities of both sludge and solid waste (MSW) managed at the site. As the amount of sludge that can be accepted into a landfill is limited to 25 percent by wet weight, the contribution of sludge, by volume, is relatively small in relation to the total amount of waste managed. Therefore, under this operating condition, construction of new landfills or extensions cannot be based solely on sludge generation, but must take into account MSW generation as the primary consideration.

"Sludge only" landfills require very tight operational controls to prevent both aesthetic and technical problems. The USEPA has published extensive literature on the design and operation of such sites. The parameters that must be met may significantly reduce the viability of this option for the Hudson Valley counties.

In addition to the above conditions, several other factors should be considered regarding disposal of sludge and septage at a landfill:

- Landfilling sludge and septage does not take advantage of the inherent nutrient and energy value of these materials except when used with cover material where the nutrients can benefit vegetation;

- Sludge and septage contain as much as 80 percent moisture. This contributes to the formation of leachate at the site which must be treated and managed so as not to contaminate groundwater;

- Landfill capacity should be reserved for wastes for which limited recycling options exist. In the seven county region, rapid growth and lack of available land places landfill capacity at a premium.

The NYSDEC Part 360 regulations allow a landfill to accept more than 25 percent sludge by weight provided leachate collection, treatment and monitoring facilities are incorporated into the facility plan. Discussions with county and NYSDEC representatives indicated that none of the landfills meet this requirement. Thirty-seven sewage treatment plants meet the minimum criteria for sludge solids concentration and stabilization. One hundred fourteen plants lack the capability to produce the 20 percent solids cake; 46 plants lack one of the required stabilization processes. Conversely, only 37 plants, accounting for less than one-third of all sludge produced in the region, meet both dewatering and stabilization criteria.

Estimating the Cost of a Landfill for Sludge Disposal

There are a number of factors that can affect the cost of a landfill:

1. Daily, intermediate and final cover requirements could vary the actual cost of operation;

2. Closure and post-closure care and monitoring costs should be set aside as the site is developed;

3. The availability of a municipal sewage collection and treatment system to receive the leachate generated at a site will save the capital cost of a leachate treatment system;

4. The potential for methane gas recovery over the long term could help offset some of the operating costs.

Two cost estimates, one for a landfill for all sludge generated in the seven county region and one for a site limited to 100 acres, are presented in Appendix E to illustrate the range of costs and the items which should be included in the facility plan. These estimates demonstrate the higher costs now associated with newer, more stringent regulatory requirements and, in the case of the smaller site, the limitations inherent in a smaller working area. They are only hypothetical situations and, therefore, serve to display relative cost features of an acceptable facility. It is important to note that a 100 acre landfill will take only about one-fifth of the sludge (in dry tons) generated per day in the region. Five or more sites of this size might be required depending on the depth or height of fill.

Estimates of land costs have not been included as they are subject to a very large range in price in the seven county region. They must, however, be included in any specific site estimate and they can be included in the capital cost.

COMPOSTING

Introduction

Sludge composting is the aerobic decomposition of organic materials to a relatively stable, humus-like product. The stabilization process is performed by the activity of microbial organisms (bacteria and fungi) inherent in wastewater sludge. A properly designed composting operation provides the correct environment for this stabilization process to proceed within a reasonable time at an acceptable cost under existing climatic and space limitations. It must be understood that composting is a stabilization process; it is not a disposal process. A substantial portion of the sludge component remains, and must be disposed, after the composting process has been completed.

The first consideration in implementing any composting system is the availability of a market. The first word of advice from those experienced in composting activities is to conduct a comprehensive market survey for the sale and reuse of compost. The second most important consideration is not to use the market value of compost as an offset against capital or operating costs, as compost value is generally unstable and is generally set by the material it replaces in the marketplace.

Compost is considered to be the most stabilized, least offensive, publicly acceptable form of sewage sludge. But while a great deal of time and expense goes into producing compost, its nutrient value, in the form of nitrogen, is reduced by approximately 50 percent. Therefore, the potentially limited market and reduced nutrient value of compost must be compared carefully with the benefits of any composting program.

Requirements of the Composting Process

Common to all composting processes are the following requirements.

Bulking Agents

Bulking agents control moisture levels, maintain adequate carbon-nitrogen (C/N) ratios, provide porosity for air circulation, and provide structural stability for compost pile construction. Materials found to be effective bulking agents include wood chips, wood bark, sawdust, rice hulls, shredded tires, and recycled compost.

Moisture Control

Sewage sludge is usually dewatered to approximately 80 percent moisture content (20 percent solids) prior to use in any composting system. The optimum moisture content for material to be composted is 50 to 60 percent. The structural integrity of piles and air circulation is adversely affected at over 60 percent moisture. A ratio of bulking agent to sludge of approximately 2.5:1 is usual to achieve proper moisture control.

Carbon-Nitrogen Ratio (C/N)

Microorganisms require 30 parts of carbon for each part of nitrogen used in aerobic respiration. C/N ratios of 25 to 35:1 are considered ideal for composting. Lower ratios cause nitrogen loss by volatilization and higher values require longer composting retention times.

Porosity

Bulking agents create voids in the compost mass by adding a random assorted structure (materials of different sizes and shapes to prevent compaction) and by absorbing moisture. These spaces permit the circulation of air required to maintain aerobic conditions. Lack of an aerobic environment will result in offensive odors, require an extended retention period, and result in an inconsistent product.

Structural Stability

It would not be possible to achieve the size and relative dimensions of windrows and aerated piles without using bulking agents. The small particle size of unbulked sludge tends to cause it to slide and spread out rather than remain firm.

Temperature

The optimum temperature for composting is 40 to 55°C. Lower temperatures decrease the rate of microbial activity and prevent destruction of pathogenic organisms. Higher temperatures will drive off excessive amounts of moisture, also decreasing microbial activity.

Oxygen

The optimum oxygen concentration for composting has been found to be five to 15 percent by volume. Higher levels tend to reduce temperatures. Lower levels can lead to the development of anaerobic conditions. If proper temperatures are maintained, oxygen levels will usually be adequate for composting requirements.

Screening

Screening the finished compost is necessary to separate and recycle the bulking material and reduce the amount of compost to be managed. The bulking agent is expensive. Effective screening can reduce this cost. Approximately 40 to 70 percent of the bulking agent can be captured and reused depending on the type of equipment used and the moisture content of the finished compost. Moisture levels of 60 percent or more severely hamper effective screening.

Leachate Collection and Treatment

Condensation of moisture in air handling systems as well as rainfall create leachate with a composition similar to the composted material from which it is derived. This leachate can be treated in a sewage treatment plant. Spray irrigation of the leachate has also been proven effective without causing negative environmental impacts.

Mixing

The selection of appropriate mixing equipment in relation to the type of bulking agent used and the moisture content of the sludge cake is a significant factor in the success of the composting operation. Inadequate mixing can lead to a non-homogenous material. This, in turn, will cause an inconsistent final compost in terms of pathogen destruction and moisture content. Odor problems, screen clogging, and excessive drying and curing times can all be related to inadequate mixing of sludge cake and bulking agent.

Curing

Following the active composting period (generally 14 to 21 days) a curing period of two to four weeks is usually required to complete the stabilization process and to provide additional drying time. Compost can be screened or unscreened during the curing period. In areas where rainfall interferes with effective drying and curing operations, roofed structures and aeration of the curing piles have been used to great advantage.

Volatile Solids (VS) Ratio

The VS ratio is a relative measure of the population of microorganisms in sludge. VS ratios of sludge cake to be composted should be a minimum of 35 percent. Studies show that ratios below this minimum lack sufficient biomass and substrate (food source for microorganisms) for composting. In addition, inordinate amounts of bulking agent are often needed to supply an adequate carbon source. With normal wastewater sludges the VS should not be a problem. Where a high percentage of inorganic waste, such as an industrial waste, is being treated, or a significant amount of inorganic chemicals, such as ferric chloride or lime, is added during the treatment process VS ratios could become critical.

pH

The optimum pH for composting is 6 to 8. This range will accommodate the active species of bacteria and fungi involved in the composting process. As it is difficult if not impossible to alter the pH of the compost pile, sludge cake to be composted should be within or near this range. Wood products used as a bulking agent provide buffering action and reduce high pH to appropriate levels. Except in extreme cases, pH has been shown to be self-regulating after a few days by virtue of the metabolic processes involved in composting.

Composting Systems

Composting systems are divided into two basic types:

- Unconfined or open types
  a. Windrow
  b. Aerated static pile

- Confined or in-vessel types

Windrow System

A typical compost windrow is five feet high and seven feet wide at the base. Experimentation at a project in Beltsville, Maryland indicates that poured concrete is the ideal base for effective leachate collection and equipment operation. Windrow piles are turned at various frequencies depending on climatic conditions and the age of the pile. Several turnings per day may be necessary for the first few days to maintain aerobic conditions, reduce odors, and ensure a homogenous mixture. Thereafter, the compost pile is generally turned on the basis of oxygen availability or temperature within the pile. Oxygen and temperature levels are measured by probes inserted at various points within the pile. As with all systems, temperatures of 40 to 55°C and an oxygen concentration of five percent by volume are generally considered ideal.

After about five days, the pile is turned once per day for the next 25 to 30 days. The windrow composting process is considered complete when a temperature of 55°C has been continuously maintained for a period of 15 days. If the material is not to be marketed to the general public, somewhat less stringent regulations apply: the compost temperature may be maintained at 40°C for five days, and for four hours during the five day period at 55°C.

Disadvantages of the Windrow System

- High potential for and limited control of odors
- High temperature and moisture variability due to prevailing climatic conditions
- Larger area required than for other systems
- More labor- and machine-intensive than aerated pile method due to frequent need to turn pile
- Final product less homogenous due to varying rates of organic activity within pile

Advantages of the Windrow System

The only advantages of the windrow may be its simplicity of operation and low capital cost. Although specialized compost turning equipment is preferred, pile turning can be accomplished with conventional front-end loaders if pile construction is consistent with equipment capability. Thus, a basic composting operation can be accomplished on a small scale with little capital investment.

Aerated Pile System

The aerated pile system was developed to eliminate some of the disadvantages of the windrow system. Using this technique, land requirements are generally reduced by 25 percent, and odors are reduced or eliminated even when composting raw sludge. The addition of forced air ventilation provides the control necessary to achieve a consistent final product and reduce stabilization time.

An aerated pile is constructed by placing aeration piping of various configurations, depending on pile dimensions at ground level, over which a six to eight inch layer of bulking agent is placed and extended to the pile edges. The underlayment of bulking agent provides even air distribution, moisture absorption and odor reduction. A sludge to bulking agent mixture of approximately 40 percent solids content (one part sludge at 20 percent solids and two parts bulking agent) is then placed over this underlayment to form a triangular cross section 15 feet at the base by 7.5 feet in height. The entire pile is covered with a one-foot-thick layer of screened or unscreened cured compost. This covering provides insulation to the pile and reduces odors.

The aeration piping header is connected to a blower (generally about 1/3 Hp) which draws air down through the pile on a predetermined time cycle to meet the oxygen and temperature requirements of the pile. (For example, five minutes on, 15 minutes off, for a 56 foot long pile containing up to 80 wet tons of sludge.) Aeration times must be monitored fairly closely, as overaeration will cool the pile below effective compost temperatures (55°C), and underaeration will cause anaerobic conditions resulting in undesirable odors and a less stabilized product. The use of temperature sensors in a feedback control loop effectively controls aeration. The feedback control loop controls blowers by "feeding back" the pile temperature. For example, a temperature of 40°C would deactivate blowers while a setting of 55°C would activate blowers. The effluent air may then be piped to a cured compost filter pile or other odor control device for further odor removal.

Numerous other pile and aeration configurations are possible depending on site and other limitations. The configuration described above will accommodate approximately three to five dry tons of sludge per acre including space for runoff collection, administration, parking, mixing, screening, storage, and other ancillary services.

Another type of pile configuration, the extended aerated pile, is designed to reduce the composting site area by approximately 50 percent. This reduction is achieved by more intensive and extensive pile construction. Figures 2 and 3 illustrate extended and individual aerated piles.

Pile configurations continue to evolve and are site specific, so it is difficult to determine the exact land area required for a given composting system prior to detailed design. However, for the purpose of preliminary planning, it can be assumed that five dry tons may be composted per acre.

Under normal operating conditions, 14 to 21 days of composting time are required to obtain a satisfactory final product. An additional curing period of a few days to one month is necessary to remove excess moisture and complete the stabilization process. After a stable temperature is achieved within the pile (55°C), adverse climatic conditions (excessive rainfall or low ambient temperatures) seem to have no effect on the process, assuming proper construction and operation.

FIGURE 2
INDIVIDUAL AERATED PILE

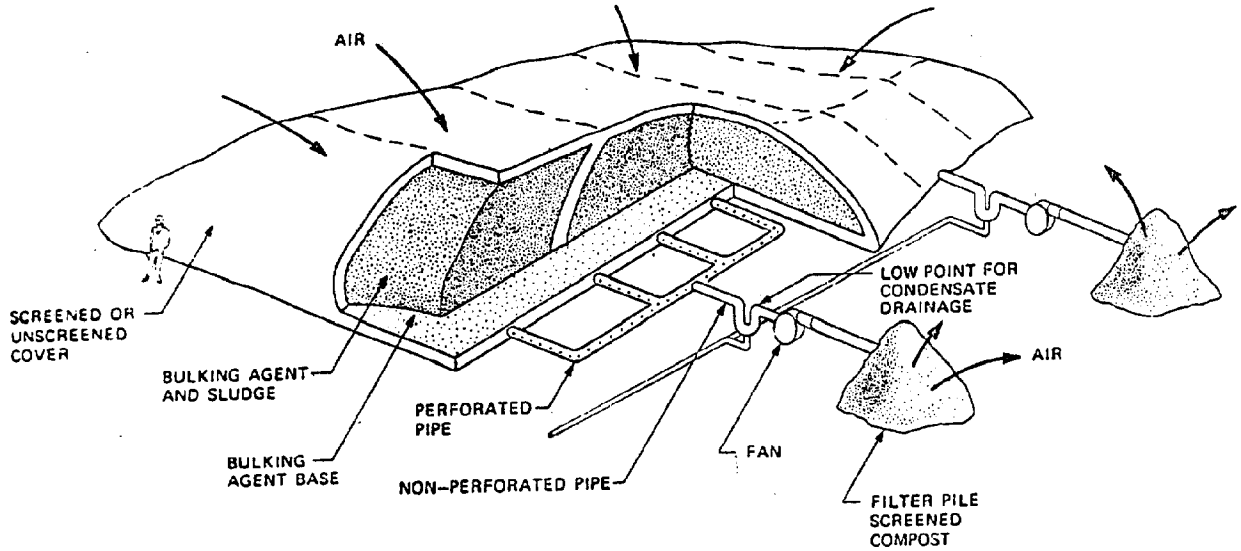

AERATION PIPE SET-UP FOR INDIVIDUAL AERATED PILE

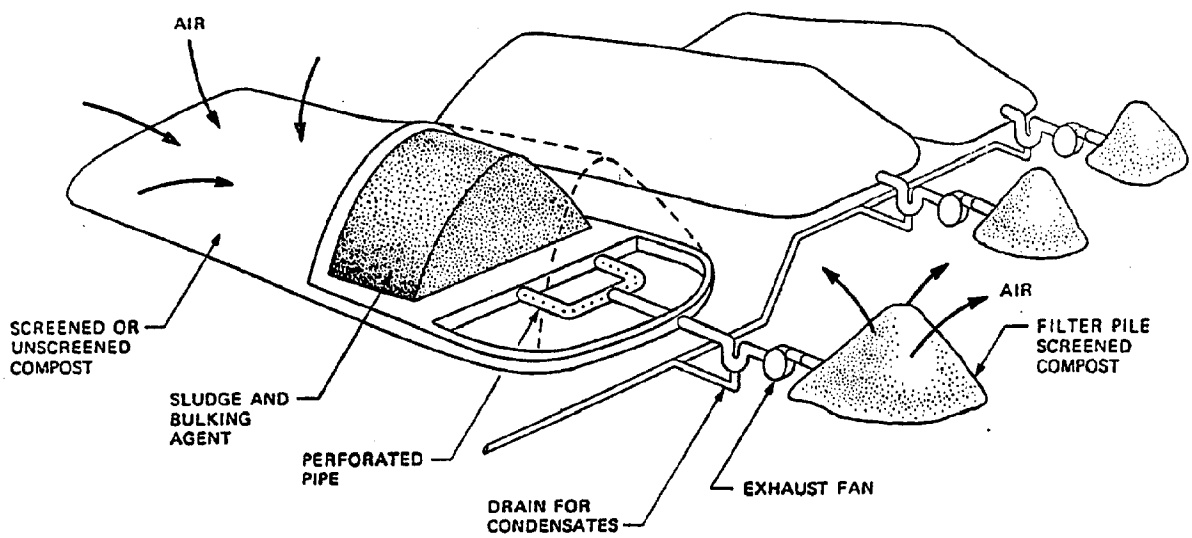

CONFIGURATION OF INDIVIDUAL AERATED PILES

SOURCE: "Process Design Manual for Sludge Treatment and Disposal", USEPA 625/1-79-001, September 1979

FIGURE 3

EXTENDED AERATED PILE

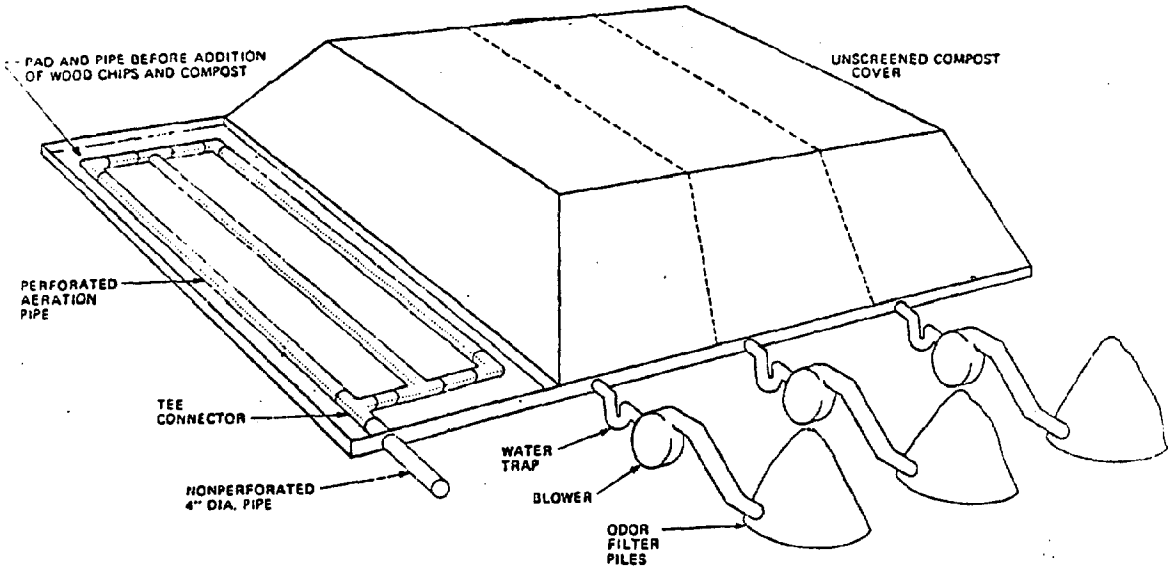

DESIGN EXAMPLE EXTENDED AERATED PILE CONSTRUCTION

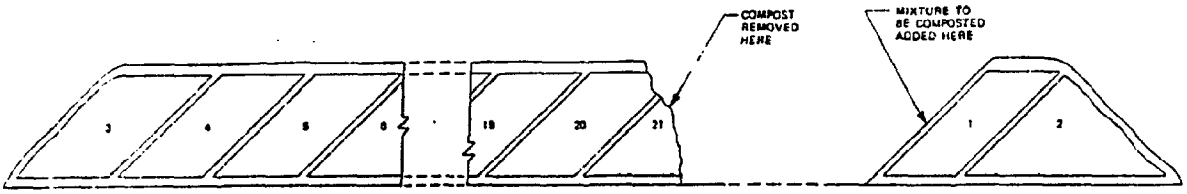

CONFIGURATION OF EXTENDED AERATED PILE

SOURCE: "Process Design Namual for Sludge Treatment and Disposal", USEPA 625/1-79-011, September 1979

Confined or In-Vessel Composting Systems

The major advantage of this type of system is the limited area per ton required to effect composting. In-vessel systems are much more capital intensive and mechanized than windrow or aerated pile systems. The types of in-vessel systems available are as varied as the number of manufacturers producing them. All accomplish the composting process within a closed container to minimize or eliminate odors and reduce process time by using a high degree of operational control. Individual systems differ primarily in process control and materials handling methods. As with the previously described processes, the process control parameters are temperature, exhaust gases, and moisture. In the windrow process, gross control of oxygen is achieved by turning the piles; temperature and moisture are dependent variables regulated by oxygen concentration. In the aerated pile method, oxygen concentration may be finely controlled. However, temperature and moisture are still only indirectly controlled. With in-vessel systems, all process variables can be highly controlled. Within the relatively small vessel or reactor, virtually complete and continuous mixing (usually of a patented design) allows all process parameters to be closely monitored and controlled by means of aeration, moisture and heat addition.

USEPA studies suggest that the limited detention times of in-vessel systems do not allow the composting process to reach completion.* If this is true, then the curing periods of two to three months required to reduce volatile organic levels increase time and space requirements to those for unconfined systems. Figure 4 illustrates the components of a typical in-vessel system. A list of some manufactures of in-vessel systems is included as Appendix C.

Potential Uses of Compost

The composting process removes approximately 50 percent of the available nitrogen present in sewage sludge. Sludge is known to be deficient in potassium and phosphorus compared to commercial fertilizer. Therefore, the fertilizer value is reduced as a result of the composting process. Indeed, compost should not be considered a fertilizer but a soil amendment. However, there are significant benefits to using compost as a soil amendment:

- increased water retention capacity of sandy soils
- increased porosity of clay soils
- increased microbiological populations in soils
- increased availability of micronutrients
- provides for slow release (mineralization) of nitrogen, phosphorous and potassium.

* Process Design Manual for Sludge Treatment and Disposal, EPA 625/1-79-011, September 1979.

FIGURE 4

TYPICAL PROCESS FLOW

SCHEMATIC OF A CONFINED COMPOSTING SYSTEM

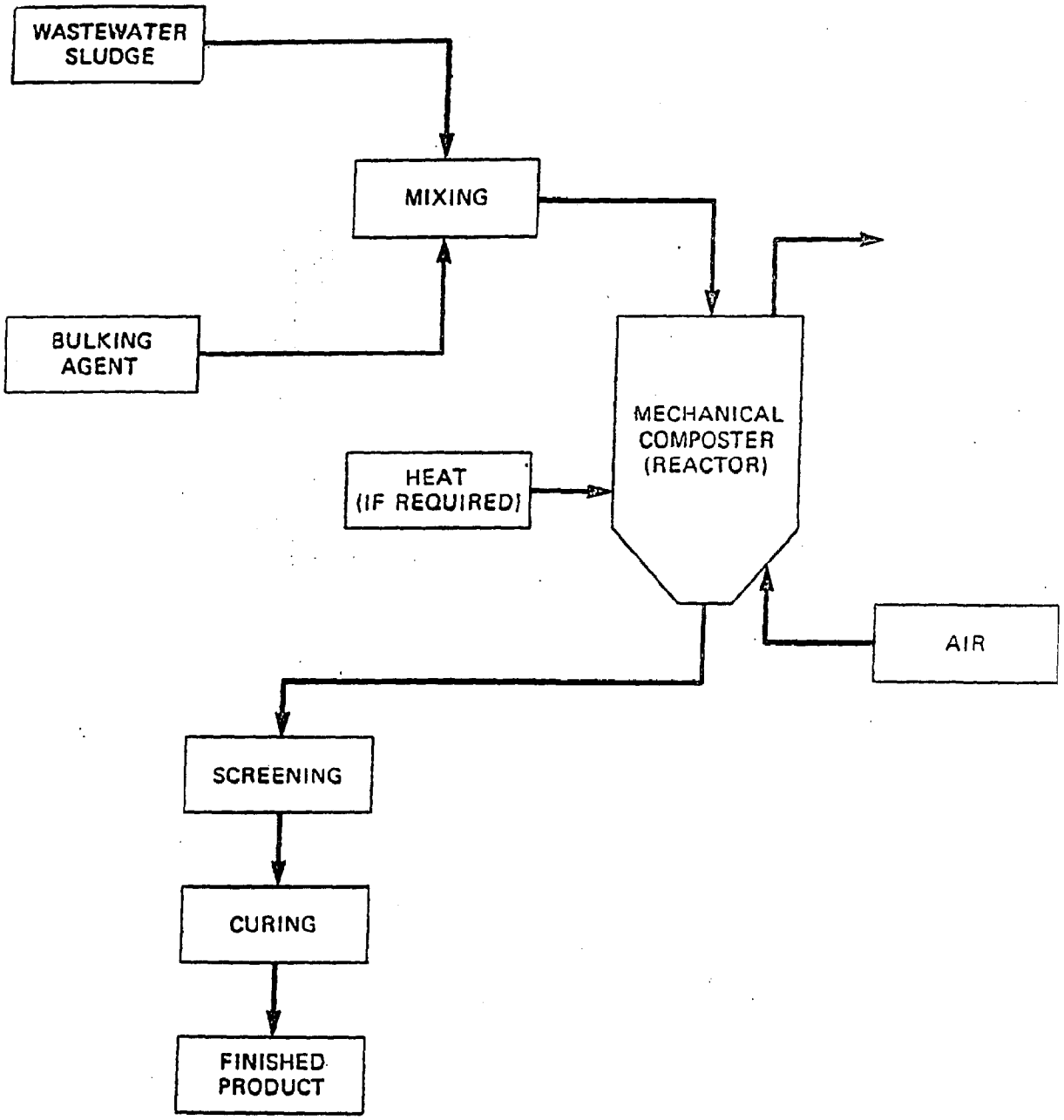

SOURCE: "Process Design Manual for Sludge Treatment and Disposal" USEPA 625/1-79-011, September 1979

Composted sludge can be bagged and sold, or applied directly to land. Substantial increases in vegetable yields have occurred as a result of using composted sludge. Use of compost in land reclamation is well documented. Some experiments have demonstrated that compost is effective in controlling plant disease and fungi. The increasing cost of peat moss makes the horticultural industry potentially a prime market for compost.

Safety and Health Aspects of Composting

The following information is summarized from Technical Bulletin: Composting Processes to Stabilize and Disinfect Municipal Sewage Sludges, EPA 430/9-81-011, July 1981,pp. 33-34 and Appendix B-1. Complete information can be found in Appendix D of this report.

Employee Safety

The usual rules of sanitation apply to compost facilities, such as washing hands before eating and before going home. Facility operators must provide showers and on-site clothing which is worn only at the facility. Dust conditions should be minimized.

The facility should be located away from individuals susceptible to respiratory or other illnesses which might be brought about by the pathogens in sludge. This would include hospitals and nursing homes, for example.

Health Aspects

Facility workers are exposed to the risk of primary pathogens present in sludge and from secondary pathogens such as fungi and actinomycetes which produce an allergic response in lung tissue. The latter two grow during composting and usually infect only people with debilitated immune systems. However, the pathogens can cause an infection in an apparently healthy individual. Available studies indicate the risk to workers from primary pathogens is low. Infection can be prevented by proper sanitary procedures. Individuals in good health should not be infected by secondary pathogens. However, those predisposed to diabetes, asthma, emphysema or tuberculosis or who are taking certain medications may be more susceptible to infection.

Table 22 lists pathogens generated during composting and their associated diseases.

TABLE 22

EXAMPLES OF PATHOGENS FOUND IN OR GENERATED DURING COMPOSTING OF SEWAGE SLUDGE, TOGETHER WITH HUMAN DISEASES ASSOCIATED WITH THESE PATHOGENS.

GROUP	EXAMPLE	DISEASE
PRIMARY PATHOGENS		
Bacteria	Salmonella enteritidis	Salmonellosis (food poisoning)
Protozoa	Entamoeba histolytica	Amoebic dysentery (bloody diarrhea)
Helminths	Ascaris lumbricoides	Ascariasis (worms infecting the intestines)
Viruses	Hepatitis virus	Infectious hepatitis (jaundice)
SECONDARY PATHOGENS		
Fungi	Aspergillus fumigatus	Aspergillosis (growth in lungs and other organs)
Actinomycetes	Micromonospora spp	Farmer's lung (allergic response in lung tissue)

SOURCE: Technical Bulletin: Composting Processes to Stabilize and Disinfect Municipal Sewage Sludges, EPA 430/9-81-011, July 1981.

Composting Facilities: Case Studies

General Comments

The following case studies resulted from telephone conversations with on-site chief operations personnel or municipal bureau directors. These discussions were held in early to mid-December 1985 and reflect the operational status of the facilities at that time.

In discussing their operations, the contacts, in some cases, emphasized particularly noteworthy points, or several contacts mentioned items that most facilities seemed to share in common. Although to some degree these points may appear to be self-evident, they are included below as a list of general comments or guidelines.

1. The source of sludge cake should be located as near to the compost site as possible. Preferably, the composting facility should share the same site as the STP. If this is not possible, a location near each other is a high priority to reduce the cost involved in transporting wet sludge cake from the STP to the composting site. Having, the sludge cake source and STP in proximity also allows use of the STPs wet process train for treatment of leachate from the compost site and permits sharing of personnel and equipment.

2. When considering composting as a sludge management alternative, municipal officials and facility directors should visit as many operational sites as possible to become aware of the disadvantages and pitfalls of the various systems and equipment. This is especially true as composting systems and equipment can be particularly site dependent.

3. All contacts confirmed that odors exist with any composting operation. Most felt that the odors generated were, for the most part, confined to or in proximity to the site. However, adverse conditions (thermal inversion, or warm, humid, or calm periods, for example) caused odors to migrate and complaints to result. In addition, odors that operations personnel found acceptable were sometimes found objectionable by local residents. An adequate buffer zone should be provided between the compost site and residential areas. Two thousand feet seems to be an acceptable minimum, depending on local conditions (prevailing wind direction, average temperature, etc.).

4. Larger composting operations should consider hiring a professional consultant to do a marketing program. As marketing has traditionally not been a principal focus of municipalities, in-house expertise in this area is generally not available to municipal officals. Marketing is important to offset operational costs by sales of compost; a backlog of compost on site can create odor and storage difficulties.

5. Costs presented here and in other sources should be considered approximate. Differences in cost accounting practices, amortization schedules, and site-specific factors make direct cost comparisons difficult without detailed analysis.

Composting Facilities: Case Studies

CASE 1

LOCATION:	Scranton, PA
OPERATOR:	Scranton Sewer Authority
PROCESS TYPE:	Extended, aerated static pile
CAPACITY:	8.5 tons per day
SITE AREA:	Ten acres presently; ultimately 25 acres
DRIED SLUDGE CAKE:	23 percent solids
SLUDGE DEWATERING:	Vacuum filter
BULKING AGENT:	Wood chips ($8.10/yd)
MIXING RATIO:	2:1
CAPITAL COST:	Approximately $3 million (25 acre site)
MARKETING:	Compost sold for $5 per ton (approximately 4 cu. yd.) in bulk only

DISCUSSION

The Scranton system became operational in September 1984, replacing incinerators that were outmoded and inefficient. The second construction phase of the project is currently underway to expand the facility to 25 acres. The facility processes 12,000 to 13,500 wet tons of sludge per year at an average of 23 percent solids to produce 5,000 to 6,000 tons of compost per year at 40 to 60 percent solids.

Compost is sold in bulk to nurseries, golf courses and municipalities for use in parks and other public lands. A feature unique to sludge management in Pennsylvania is the active involvement of Pennsylvania State University. Penn State provides specific site management guidance (soil requirements, and application rates, for example) and reduced rates for sludge and compost laboratory analysis.

Scranton is relatively free of industrial discharges and, therefore, generates a "clean" sludge and compost. The composting site is located approximately 1,500 feet from a residential area and has virtually no odor problems. The composting operation employs three persons full time. Process control is based on temperature and oxygen monitoring.

CASE 2

LOCATION:	Durham, NH
OPERATOR:	Town of Durham
PROCESS TYPE:	Individual aerated pile
CAPACITY:	600 dry tons per year
SITE AREA:	5 acres (10 acres including sewage treatment plant)
DRIED SLUDGE CAKE:	19 percent
SLUDGE DEWATERING:	Vacuum filter
BULKING AGENT:	Wood chips ($6.00 per yd.)
MIXING RATIO:	3:1
CAPITAL COST:	$1.2 million
MARKETING:	Compost is "sold" to other Town departments for $6 to $7 per yd.

DISCUSSION

Durham became operational in the fall of 1980, and is considered one of the most successful composting operations in the East. The municipal waste stream is free of industrial waste, generating a "clean" sludge and compost. Durham is the home of the University of New Hampshire. It has a winter population of 24,000 and a summer population of 10,000. The compost facility is located on the STP site and was part of a $7.5 million treatment plant upgrade that included secondary treatment facilities and sludge handling facilities as well as the composting process.

The compost operation employs two full time persons as well as a half time supervisor. The ultimate users of Durham's compost are other Town departments which are charged $6 to $7 per cubic yard. This rate provides a substantial cost savings to the Town over soil amendments used in the past, for example replacing $12 per cubic yard top soil.

The composting facility is located directly adjacent to the treatment facility and approximately 700 to 800 feet from the nearest residence. Odors resulting specifically from the composting facility are not judged to be a problem according to the facility operator. However, odor problems at the treatment plant have occurred.

CASE 3

LOCATION:	Calverton, MD
OPERATOR:	Washington Suburban Sanitary Commission (public utility)
PROCESS TYPE:	Extended, aerated static pile
CAPACITY:	400 tons per day design; 200 tons per day currently being handled
SITE AREA:	116 acres; 22 acres paved (concrete and asphalt)
DRIED SLUDGE CAKE:	17 percent solids (average)
SLUDGE DEWATERING:	Various
BULKING AGENT:	Wood chips ($12.40/ton)
MIXING RATIO:	Approximately 4:1
CAPITOL COST:	$27 million (400 tons per day site)
MARKETING:	By contract with Maryland Environmental Services (state agency) under the trade name of COMPRO. Sold in bulk at $5.00 per cu.yd. to turf farms, nurseries and similar users, in 40 lb. bags to the general public

DISCUSSION

Operational in April 1983, the Calverton facility is called a "Cadillac" due to its size and sophisticated equipment. For example, the plant features two 120 feet by 600 feet roofed, compost pads served by sophisticated air handling and odor control systems. Calverton is currently constructing its third compost pad and related facilities to bring the operation to its design capacity of 400 tons per day.

Located within three miles of a population of 30,000, the facility has generated complaints of odors despite the higher technical odor control equipment. However, the operator feels that off-site odors are "minimal".

The ultimate users of the compost product are reached via a marketing program by Maryland Environmental Services. A market for the facility's ultimate design capacity of 400 tons per day is believed to be available. The operation recovers approximately $100,000 per year through compost sales.

CASE 4

LOCATION:	Hampton Roads, VA
OPERATOR:	Hampton Roads Sanitation District
PROCESS TYPE:	Extended, aerated static pile
CAPACITY:	12 tons per day design, 7.5 tons per day actual
SITE AREA:	5 acres; 1 acre of pads
DRIED SLUDGE CAKE:	16.5 percent solids
SLUDGE DEWATERING:	Belt filter press
BULKING AGENT:	Wood chips ($20 to $22 per ton delivered)
MIXING RATIO:	3.5:1 (by volume)
CAPITAL COST:	$1.7 million
MARKETING:	Landscaping and related industries; sold in bulk for $7.50 per cu. yd. ($6 per cu. yd. for 10 cu. yds. or more)

DISCUSSION

The Hampton Roads plant commenced operation in October 1981, and composts sludge cake from three sewage treatment plants within the sanitation district. The facility is producing under capacity due to the excessive wetness of the preprocessed sludge. Design called for 20 percent cake solids, while actual cake solids average 16 to 17 percent solids. The Hampton Roads operation claims minimal odors and attributes this to maintaining moisture levels at 60 percent or less and providing for aeration during curing and storage periods.

Marketing is handled directly by the sanitation district under the leadership of a full time agronomist. Compost is in demand and there is a market for all that can be produced.

CASE 5

LOCATION:	Denver, CO.
OPERATOR:	Denver Metropolitan Sewage District #1
PROCESS TYPE:	Aerated windrow
CAPACITY:	105 tons per day design; 70 to 75 tons per day currently handled
SITE AREA:	23 acres; 17 acres under cover
DRIED SLUDGE CAKE:	20 percent solids
SLUDGE DEWATERING:	Centrifuge
BULKING AGENT:	Wood chips ($20-$25/ton, softwood, no screening operation)
MIXING RATIO:	2:1
CAPITAL COST:	$13 million
MARKETING:	Landscaping and related industries; sold for $6 to $8 per ton; a bagging operation and aggressive marketing program is planned for 1986

DISCUSSION

The Denver facility is in partial operation and under construction for full scale operation scheduled for March or April 1986. The Denver operation is relatively unique in the application of the dual utilization concept: land application and composting. Basically, this amounts to land spreading liquid sludge when climatic conditions permit and composting sludge during adverse conditions. Land application is the preferred alternative due to the lower operational cost ($60/ton for landspreading vs. $75/ton for composting).

Denver's compost is rated "Grade I" by the Colorado Health Department. This is the highest grade of classification, making the compost suitable for all agronomic uses including crops for direct human consumption.

The Denver facility is located in an industrial area within one-quarter mile of a residential area and within 1.5 miles of a densely populated area. No odors emanate from the composting facility. In part, this may be due to the fact that composting is confined to the colder periods of the year.

CASE 6

LOCATION:	Cape May, NJ
OPERATOR:	Cape May County Municipal Utilities Authority (not-for-profit public utility)
PROCESS TYPE:	In-vessel (Purac Engineering Inc., subsidiary of ABV-Sweden)
CAPACITY:	12 tons per day design; 20 tons per day actually handled
SITE AREA:	3 acres
DRIED SLUDGE CAKE:	20 percent design; 30 percent (average) actual
SLUDGE DEWATERING:	Belt press
BULKING AGENT:	Sawdust
MIXING RATIO:	0.2 to 0.3 parts sawdust: 1.5 parts recycled compost: 1 part sludge cake
CAPITAL COST:	$10 million ($5 million for site development, $5 million for composting facilities)
MARKETING:	Since the facility has been operational just over a year, marketing has not begun; compost is being stockpiled

DISCUSSION

Operational on April 29, 1985, this facility is unique in its ability to process approximately 160 percent of its designed capacity. Facility operators attribute this capability to the lack of moisture in the preprocessed sludge cake (65 percent to 75 percent actual as opposed to 80 percent design) and the high level of volatile solids (VS) present in the sludge (70 percent design VS as opposed to 85 percent actual VS). The operator commented that "this high volatility causes the sludge to disappear"! The operator also reported that a water spray modification was added to handle the abnormally dry sludge.

The reactor vessel consists of two rectangular stages: stage one is 30 feet by 55 feet long, stage two is 300 feet by 45 feet long. Stage one can be operated alone or in series with stage two. Similar facilities are under construction in Fort Lauderdale and Sarasota, Florida.

The facility processes an average of 20 tons per day of sludge from four sewage treatment plants treating a total of 45 to 50 million gallons a day. An absence of industrial dischargers produces a clean sludge and, consequently, a clean compost. Potential markets for Cape May's compost include sod farms, nurseries and landscapers.

CASE 6 (continued)

Although the process permits 100 percent of the exhaust gases to be captured, the facility, one-half mile from a residential area, has had odor problems. To control odors, the existing single stage sulfuric acid wet scrubber is being expanded to include a second stage scrubber using caustic soda and an oxidizing agent. Another problem at this facility, mechanical in nature, has been with the use of drag chain conveyors for moving sludge cake. This section of the process is under redesign to replace this type of conveyor with a more suitable sludge conveyor device. Parking space is inadequate and road access is deficient.

CASE 7

LOCATION:	Windsor, Ontario, Canada
OPERATOR:	Hearn and Sons Trucking (contract operator)
PROCESS TYPE:	Extended, aerated static pile
CAPACITY:	110 tons per day
SITE AREA:	7 acres
DRIED SLUDGE CAKE:	27 percent solids
SLUDGE DEWATERING:	Centrifuge
BULKING AGENT:	Shredded rubber tires and wood chips
MIXING RATIO:	one part rubber:2 parts wood chips: one part sludge
CAPITAL COST:	$1 million (US)
MARKETING:	Current use is for landfill final cover and parks and recreation facilities

DISCUSSION

Operational since May 1977, this facility has some rather unusual features: in-house design, contractor operated, a large amount of covered site area, use of shredded rubber tires as a bulking agent, and a contractor-designed screening device. The basic facility was designed by City of Windsor employees in cooperation with the City's contract operator who implements modifications as needed in what could be termed an "evolutionary process".

The City bids out the operation on a five year contract based on tons of sludge cake processed. The current contract price is $15 per metric ton ($12 per metric ton sludge cake plus $3 per metric ton bulking agent) or approximately $67/dry ton (US dollars and tons). The contract operation is perferred because it eliminates the high cost of the City's unionized labor.

Although the compost pads are not covered, a covered mixing building (8,000 square feet) and a drying structure (roof and three sides, 12,000 square feet) allow the finished compost to remain relatively dry after processing.

The bulking agent mix consists of recycled remnant furniture hardwood chips and shredded rubber tires. The shredded rubber tires are available in Detroit from Uniroyal Tire ($13.33 US per cu. yd.) specified as 2" x 3" plus 10 percent size variation. At least one source indicated that heavy metal problems may be associated with the use of shredded rubber tires. Windsor claims no such problems will be encountered provided that the tire pieces are clean cut, with no metal belting protruding from the rubber.

CASE 7 (continued)

The contractor-designed screeening device is basically a modified, high capacity sand and gravel separator using a rubber mesh. Recovery rates of hardwood chips are claimed to be as high as 93 percent and losses of shredded rubber less than 1 percent.

Although no aggressive marketing program is being undertaken, the City has saved approximately $1 million in landfill cover costs. The compost is currently available on site free of charge although the City is ultimately interested in sale of the finished compost. Presently, the City does not apply the value of the compost to offset operational or capital costs.

The facility receives sludge cake from its 30 million gallons per day (US, dry weather flow) sewage treatment plant. The composting site is within 1,100 feet of a residential area and receives about three to five odor complaints per year. The facility operator recommends a buffer zone of approximately 2,000 feet, however, to compensate for odor problems.

CASE 8

LOCATION:	Plattsburg, New York
OPERATOR:	City of Plattsburg (owned by Clinton County)
PROCESS TYPE:	In-vessel (Fairfield)
CAPACITY:	34 dry tons;170 wet tons ultimately (design capacity) 20 dry tons current sewage treatment plant production
SITE AREA:	14.7 acres (process and storage)
DRIED SLUDGE CAKE:	20 percent solids
SLUDGE DEWATERING:	Belt press (four 2-meter presses)
BULKING AGENT:	Sawdust (softwood)
MIXING RATIO:	1:3 sludge:sawdust ($20 plus per ton delivered)
CAPITAL COST:	$15 million
MARKETING:	Giveaway program, not developed

DISCUSSION

This facility features two parallel compost trains of 17 dry tons each. The Fairfield digestors are 115 feet in diameter and 10 feet deep. Both trains are equipped with sodium hyprochlorite wet scrubber systems for odor control. The site has a covered sawdust storage area and an open area for six months' storage of finished compost. The composting plant is remotely located, accessible by a one-mile road.

Costs of Composting

Information on costs of composting is difficult to obtain because:

- Cost accounting procedures among municipalities cause service costs to be charged inconsistently, i.e., dewatering costs can be sewage treatment costs or composting costs.

- Transporation costs for taking the sludge to the composting site and taking the compost to the utilization site have been shown to be significant and highly site specific.

- Cost and system requirements for bulking agents are site dependent as well as dependent on individual sludge characteristics.

A cost analysis for the preceeding case studies is shown in Table 23. These costs are approximate.

Summary

Composting as a sludge management alternative is not an ultimate disposal option, but only an intermediate stage in sludge disposal. Marketing is the most significant factor in the success of any composting operation. While sale of composted materials can be a factor in offsetting operational costs, income from this source is felt to be highly variable and site specific and, in general, does not offer significant cost reduction. In EFC's evaluation, sale of compost merely performs the service of disposing of the composted material without added cost.

A significant problem with the operation of composting facilities continues to be the generation of odors. This is particularly a problem with open or unconfined (windrow and static pile) systems. However, odor problems have been encountered with in-vessel systems as well. As there are currently only three fully operational in-vessel systems in the United States (Portland, OR; Wilmington, DE; and Cape May, NJ), experience here, as well as information on cost of operation, marketing success, reliability, and other factors is inconclusive.

It appears that the only possibility for implementing a composting facility on a large scale in the mid-Hudson region would be an in-vessel system, unless a substantial site could be located to provide a large, permanent buffer against surrounding residential development. In-vessel systems, while requiring a much smaller area for an equivalent amount of sludge capacity, have much higher associated costs. Their ability to mitigate odor problems is unproven in the United States due to a lack of operational experience.

TABLE 23
COST ANALYSIS OF COMPOSTING AT VARIOUS FACILITIES

FACILITY	PROCESS TYPE*	CAPACITY (DT Sludge/yr.) Sludge	CAPACITY (DT Sludge/yr.) Compost	O & M COST ($/DT Sludge)	CAP. COST[3] ($/DT Sludge)	TOTAL COST ($/DT Sludge)	AREA (Acres)	REQUIRED AREA (ft.²/DT Sludge/yr.)	CAPITAL ($/DT Sludge/yr.)
Scranton, PA	XSP	3,105	2,750	108.00	104.00	212.00	10	140	966.00
Durham, NH	ISP	600	unknown	116.00	216.00	332.00	5	363	2,000.00
Calverton, MD	XSP	12,410	8,250	268.00	20.00	288.00	116	407	1,088.00[1]
Hampton Roads, VA	XSP	2,738	4,107	126.00	42.00	168.00	5	80	621.00
Denver, CO	AW	26,463	54,750	75.00	37.00	112.00	23	38	339.00[2]
Cape May, NJ	IV	4,380	unknown	63.00	247.00	310.00	3	30	1,142.00
Windsor, ONT	XSP	10,840	5,420	67.00	3.00	70.00	7	28	92.00

*XSP = extended aerated static pile
ISP = individual aerated static pile
AW = aerated windrow
IV = in-vessel

[1]at 400 TPD design

[2]at 105 TPD design

[3]Note: Capital cost per dry ton is based on amortization of capital cost over 20 year period at 9% interest. This cost was computed for comparison purposes only due to the fact that actual data was not available from individual sites.

LAND APPLICATION

Introduction

Land application is a process by which sludge and septage are injected below or on the surface of land in a manner which benefits the soil or crop and does not cause any negative environmental impacts. Compared to most other management alternatives, except landfilling, it is a fairly simple process. An uncontaminated sludge properly applied to an appropriate site will benefit from the active flora and fauna present in the soil which biologically reduce the complex substances present in sludge to simple and in most cases, harmless substances for enrichment of the soil.

USEPA studies estimate that as much as 40 percent of the sludge produced in the United States is applied to land.* Where a land application program is consistent with regulatory guidelines and crop needs, sludge and septage from treatment plants can be managed in a cost effective and environmentally safe manner.

New York State Department of Environmental Conservation regulations restrict land application programs to utilization functions. Thus, a land application program which results only in the disposal of sludge is not permitted. Some benefit other than merely cost effective disposal must be demonstrated.

Use of sludge and septage on land falls into three basic catagories:

Agricultural: sludge is applied at specific rates to satisfy a portion of the fertilization requirements of a given crop.

Silvicultural: sludge is applied to increase forest productivity.

Land Reclamation: sludge is applied to revegetate land which has been disturbed as a result of such activities as strip mining or landfilling, or on land with marginal soil productivity.

Application Methods

The generally practiced method of applying sludge to land is to truck it in solid or liquid form from the sewage treatment plant (STP) and unload it at the land application site either to an application vehicle or to a storage structure of some type. While sludge may be hauled from the STP to the landspreading site by the application vehicle for short distances, this practice is not recommended. Application vehicles are designed as slow moving, low geared vehicles with high flotation tires and limited cargo capacity (approximately 2,000 gallons) for mobility in field operations. Hauling vehicles are designed to carry greater cargo loads (approximately 6,000 gallons) over paved roads at much higher speeds.

* Process Design Manual for Land Application of Municipal Sludge, EPA-625/1-93-016, October 1983, Page 1-1.

Application vehicles can apply sludge as liquid or as dried sludge cake. The decision to land apply sludge as a liquid or solid is site specific based on economic considerations related to hauling distances and dewatering costs. When liquid hauling costs approach dewatering costs, consideration should be given to using sludge dewatering facilities.

Generally speaking, liquid sludge can be more easily applied than dried sludge because it can be readily pumped from one vehicle to another and to and from storage lagoons. Dewatered sludge cake may also be transferred between vehicles but may require larger equipment like front end loaders or complex materials handling systems.

Sludge cake is spread on land surface by the application vehicle and later incorporated into the soil by discing or plowing with farm equipment. Liquid sludge may be applied in a similar manner or may be directly injected under the land surface (subsurface application) using specialized equipment or some types of conventional farm equipment such as ammonia applicators.

Subsurface application is more acceptable to the public which is concerned about odor problems. Where runoff conditions may occur, dewatered sludges allow much higher application rates before runoff becomes a problem. Subsurface injection, however, if properly applied, produces almost no runoff.

These are the advantages of each method.

<u>Dewatered</u>

- Lower transportation costs
- Handled with conventional municipal equipment
  (front end loaders, dump trucks)
- Less storage capacity required at STP or application site

<u>Liquid</u>

- More plant nutrients available
  (a large precentage of the sludge nitrogen content is lost during dewatering)
- No dewatering cost
- May be transferred using vehicle mounted pumps
- Less chance of odor problems
- Less labor required when subsurface injected

Dual Utilization

The beginning of this section describes the relative simplicity of land application as opposed to other management alternatives. In terms of the regulatory and environmental constraints, however, land application may be one of the more complex management alternatives.

One key regulatory constraint prohibits application of sludge to frozen or snow-covered ground. In New York State, this effectively prohibits land application for approximately four months of the year. During this time, sludge must be alternatively managed. The possibilities are limited to dual utilization or extensive storage facilities.

Dual utilization uses two different management options each fully implemented on a part-time basis. The composting section of this report briefly describes the City of Denver's dual utilization program incorporating both composting and landspreading. Economic considerations make land application the preferred option for Denver where winter conditions preclude landspreading but do not interfere with composting activities.

The advisability of storing sludge for four months is questionable. Storage is frequently done in connection with small facilities (less than one million gallons per day) which often use drying beds as a drying and stabilization process. Since freezing conditions preclude drying, sludge must be stored in digestors or holding tanks during winter months. Digestors frequently lack adequate capacity for storage, and operational problems caused by solids backlogs may occur. Because storage capabilities are marginal even at smaller facilities, to suggest a similar approach on a regional or county-wide basis may be inappropriate. If a land application option is chosen, a second major management alternative may be required for approximately four months.

Sludge Storage With Dual Utilization

An appreciable amount of storage capacity must be provided to allow proper management of any land application program. Reasons for storage include fluctuations in sludge production rates, adverse weather conditions, equipment malfunctions, and agricultural cropping patterns or other site requirements.

If sludge were to be stored at five percent solids, approximately 4,800 gallons of capacity would be required for each dry ton of sludge produced. Using a factor of 0.5 dry tons produced for each one million gallons of sewage flow treated, 2,400 gallons of storage capacity would be required for each million gallons of sewage treated. Going one step further, 120 days per year (four months) storage would require 288,000 gallons per year (38,500 cubic feet per year) for each million gallons per day of sewage treated.

Review of Recent USEPA-Sponsored Studies

During the past 15 years, the US Environmental Protection Agency (USEPA) has sponsored numerous studies and pilot projects on various aspects of land application of sewage sludge.

One recent study entitled "Application of Municipal Sludge on Energy Crops: A Feasibility Analysis" (EPA-600/2-83-095, September 1983), evaluated the use of sludge on marginal land to produce a woody biomass. Essentially, this involves adding sludge to soil on which is grown a crop used as an energy source (for example, trees, or plants) which is digested to produce biogas. While the study determined that such a program would not yield a profit because planting, harvesting and other program activities roughly equalled revenue from product sales, a credit from energy crop sales and from not using more costly options reduced disposal costs by up to 50 percent compared with landfill or incineration alternatives.

These are the highlights of the summary and conclusions of the USEPA report:

1. Sludge disposal through a wood energy crop program costs significantly less than other, more traditional, disposal alternatives, about 50 percent lower than incineration or landfilling.

2. Where such programs can serve population centers of approximately two million, production of electricity from the woody biomass becomes economically feasible.

3. Where the population center served approaches five million, ethanol production from sludge-grown sugar crops becomes feasible.

4. Ethanol production from sludge-grown grain crops is not economical for population centers less than 50 million.

5. While more of a return results from using sludge to grow agricultural crops rather than energy crops, energy crops minimize many of the risks associated with agricultural use, such as heavy metals, toxics and other public health considerations. In addition, the benefit or value to be obtained from wood energy is more stable and predictable than that from agricultural crops which are subject to varying weather conditions during the growing season and fluctuating annual prices for farm products.

6. For populations of 50,000 to 200,000 the capital investment is significantly lower for the energy crop method than for incineration. For population centers larger than 200,000, the energy crop approach becomes less attractive due to the costs involved in transporting by fixed pipeline.

7. Sizeable reductions in energy consumption are possible when an energy crop program is favored over incineration or landfilling. Less fossil fuel is consumed and a clean biomass fuel is produced.

8. When the biomass is used to produce electricity, as opposed to direct use for process heat or other uses, the energy balance still favors the energy crop approach.

9. Land requirements for implementing an energy crop approach are relatively small, and marginal land may be used. Thus, such sludge disposal would not encroach on land areas presently used or reserved for agricultural purposes.

10. The environmental benefits of this approach are:

- a perpetually renewable energy source of low sulfur content is generated which does not affect the carbon dioxide balance in the atmosphere

- land used for such a program will increase in value by becoming more fertile

- heavy metals and toxics problems are significantly reduced.

In the USEPA study, "Demonstration of Acceptable Systems for Land Disposal of Sewage Sludge" (EPA - 600/2-85/062, May, 1985), by the Ohio Farm Bureau Development Corporation, Columbus, Ohio, management systems are demonstrated which would minimize the potential adverse impacts of land application of sludge to farm lands and rural communities. Some highlights of this study are:

- The study involved a large number of farmers and sites so the general public would not identify a particular farm or neighborhood as the sludge disposal site.

- Public meetings and field days were held and community leaders consulted to make the public fully aware of the scope, objectives, and safety of the program. The residents of Ohio supported the concept of applying sludge to farm land as long as odor problems were minimized, nuisance situations in transporting and handling the sludge were avoided, and the metal content of the sludge was maintained at reasonable levels.

- Sludge was applied at a rate to meet the nitrogen or phosphorus requirements of crops. This method used the nutrients in the sludge efficiently and minimized the potential for surface runoff and groundwater pollution. The level of nutrients applied was comparable to fertilizer applications on land not treated with sludge, thereby reducing the possibility of damage from unwanted metals or organics. For these reasons, the public approved the program.

- A rapport developed between the people involved in spreading the sludge and the farmers who received the sludge. This is of utmost importance. A management program requires someone versed in agronomy to serve as a liaison between farmers and the sludge generator. This individual would discuss with the farmer the nutrient value of the specific loads of sludge, present and discuss monitoring data on the heavy metal content, and present a contract to farmers which would define the working relationship between the farmer and sludge generator. In general, this person would try to troubleshoot and maintain a good relationship between farmers and sludge generators.

- Careful monitoring of the quality of the sludge and care to produce a well stabilized, odor free sludge are important management requirements. Odors occur when sewage plants are functioning improperly. The disposal of these sludges on land must not be considered a necessary emergency procedure which the public simply must accept. A plan for such situations should be worked out ahead of time. At a minimum, odorous sludges should be incorporated into the soil as they are applied to the land.

- Health risks were not significant when sludge was applied at low rates, using the management systems in this study. The risks of respiratory illness, digestive illness, Salmonellae, exposure to pathogenic organisms or general symptoms were not significantly different between sludge and control groups. Similarly there were no significant differences in the health of domestic animals on sludge and control farms. Viral infections among household members were observed. There was no significant difference in frequency of viral infections between sludge and control groups. The exposure of rural residents to sewage sludges did not significantly affect their fecal cadmium levels.

- An economic analysis of landspreading was completed. The analysis was prepared in a computer format so the specific conditions of a given community could be quickly evaluated.

- Laboratory studies tracked the effect of pH on the ability of plants to extract harmful cadmium from soils to which sludge had been applied. The movement of cadmium from sludge-treated soils into the food chain is a concern. Cadmium will migrate when soil pH drops. If it is extractable through plants, it will enter the food chain. The studies determined that the extractability of cadmium in sludge soils increased dramatically as the pH dropped below 6.0.

Potential for Implementation of Land Application in the Seven County Region

Approximately 35,000 dry tons per year of sludge and 10,000 dry tons of septage are generated regionwide. Using a conservative application rate of two dry tons per acre, less than 25,000 acres would be needed to land apply the total amount of sludge and septage generated in the region.

Information supplied by the New York State Department of Agriculture and Markets indicates that the region contains 462,900 acres of farmland, of which 270,400 acres are actually crop and pasture lands as shown:

County	Farmland (acres)	Crop/Pastureland(acres)
DUTCHESS	140,800	78,400
ORANGE	131,100	87,300
PUTNAM	11,100	5,800
ROCKLAND	1,600	1,200
SULLIVAN	78,000	39,000
ULSTER	89,600	53,300
WESTCHESTER	10,700	5,400
TOTAL:	462,900 acres	270,400 acres

Using the land requirement of two dry tons per acre, less than 10 percent of the available cropland would be used in a program that would land apply the total sludge and septage generated in the region.

Section 4 discusses regulatory constraints for land application programs. Sludge rated "C" is prohibited from land application or compost utilization, "D"-rated sludge may be used at "dedicated" sites only (not cropland), and only "A"-rated sludge is acceptable for application to cropland.

In general, sludge quality information provided to EFC by the seven counties was insufficient to adequately characterize sludge quality with confidence. Sludge generators with an apparent contamination problem have sampled extensively to verify and determine the level of contamination. Many treatment plants have no data on sludge quality and others have one or two analyses only. The "A"-rated and unrated quantities of sludge shown in Table 24 may be amenable to land application. The quality of the sludge would have to be ascertained prior to using it for landspreading.

TABLE 24

SLUDGE AVAILABLE FOR LAND APPLICATION

County	"A" Rated Sludge (Tons*)	No. of STPs	Unrated Sludge (Tons)	No. of STPs	Total Tons	Total No. of STPs
DUTCHESS	1,670.9	6	1,431.6	9	3,102.5	15
ORANGE	749.5	7	3,072.7	30	3,822.2	37
PUTNAM	37.5	1	104.7	25	142.2	26
ROCKLAND	0	0	579.7	3	579.7	3
SULLIVAN	25.0	1	1,421.6	17	1,466.6	18
ULSTER	644.0	3	637.3	11	1,281.3	14
WESTCHESTER	3,469.0	4	3,964.7	8	7,433.7	12
TOTAL	6,595.9 tons	22	11,212.3 tons	103	17,828.2 tons	125

* Dry Tons

No quality data whatsoever is available from the counties or other sources on the 10,592 dry tons per year of septage generated in the Hudson Valley. USEPA studies of septage indicate that mean values of contaminents fall below EPA regulatory limits (see Table 25). It is probable, therefore, that contaminants in septage generated in the seven counties are also within regulatory standards.

The total quantities of both sludge and septage available for land application as well as acreage requirements are shown in Table 26. EFC is assuming that the "unrated" sludge and septage would qualify for land application. A land application program, however, requires a commitment of capital and other resources and should not be undertaken with the current data which is incomplete.

Using the data in Table 24, it does not appear that a land application program would yield benefits commensurate with the costs of implementing it because:

1. "A"-rated sludge accounts for only 15 percent of the total sludge and septage wastestream, hardly enough to be used as a major part of a regional solution.

2. Approximately half the "A" rated sludge is located in Westchester County. Westchester appears to have limited sites suitable for land application and is not centrally located in the region. Also, it may be politically difficult to site a land application program where 50 percent of the total waste stream will originate from one county and only about 10 percent, or less, will originate in the county in which the site is located.

If the total quantity shown in Table 26, 28,420 dry tons, is available (63 percent of the wastestream), this option becomes more attractive because an economy of scale can be achieved and a significant amount of the waste stream will be managed.

It appears that land application may be viable in all counties except Rockland and Westchester where the ratio of land available to sludge generated makes this option appear inappropriate.

On a regional basis, this option would need only slightly more than five percent of the total cropland available. It should be emphasized that EFC's recommendation is to land apply only clean sludge for its nutrient value. EFC does not propose that cropland be sacrificed for use as a disposal site. Land application on cropland, where appropriate, should not create a conflict between the goals of disposal and agricultural use.

For illustrative purposes, in a scenario where all sludge and septage generated in the region (approximately 45,000 dry tons per year) could qualify for land application, 22,500 acres would be required at a loading rate of two dry tons per acre. This option requires that approximately 10 percent of the cropland in the region be used for land application. While this option would never be used for the region's entire sludge and septage generation, this approach illustrates that large quantities of material may, with effective project management, be beneficially recycled using a small proportion of available cropland.

TABLE 25

HEAVY METAL CONCENTRATIONS IN SEPTAGE COMPARED TO TYPICAL DOMESTIC WASTEWATER SLUDGES[a]

Parameter	United States (5) (9-19)			Europe/Canada (4) (20)			Typical U.S. Domestic Sludge Ranges (28)[b]	EPA Mean (5)	Suggested Design Value for Septage
	Average	Minimum	Maximum	Average	Minimum	Maximum			
Al	48	2	200	---	---	---	---	48	50
As	0.16	0.03	0.5	---	---	---	0- 0.7	0.16	0.2
Cd	0.27	0.03	10.8	0.05	---	0.35	0.1- 44	0.71	0.7
Cr	0.92	0.6	2.2	0.63	---	5.0	0.9- 1,200	1.1	1.0
Cu	8.27	0.3	34	4.65	1.25	15.0	3.4- 416	6.4	8.0
Fe	191	3	750	---	---	---	---	200	200
Hg	0.23	0.0002	4	---	0.15	0.2	0- 2.2	0.28	0.25
Mn	3.97	0.2	32	---	---	---	---	5	5
Ni	0.75	0.2	37	0.58	---	2.5	0.5- 112	0.9	1
Pb	5.2	2	8.4	3.88	---	21.25	3.2- 1,040	8.4	10
Se	0.076	0.02	0.3	---	---	---	---	0.1	0.1
Zn	27.4	2.9	153	38.85	1.25	90	79- 655	49	40

[a]Values expressed as milligrams per liter(mg/L.)
[b]Values converted from micrograms per gram (mg/g) assuming total solids = 40,000 mg/L.

SOURCE: Handbook: Septage Treatment and Disposal EPA - 625/6-84-009, Cincinnati, Ohio, October 1984.

TABLE 26

ACREAGE REQUIREMENTS FOR LAND APPLICATION

COUNTY	"A" RATED and UNRATED SLUDGE Dry Tons	SEPTAGE Dry Tons	TOTAL Dry Tons	CROPLAND (Acres)	ACREAGE REQUIRED[1]	%[2]
DUTCHESS	3,103	4,321	7,424	78,400	3,712	4.7
ORANGE	3,822	1,768	5,590	87,300	2,795	3.2
PUTNAM	142	0	142	5,800	71[3]	1.2
ROCKLAND	580	1,894	2,474	1,200	1,237	103.0
SULLIVAN	1,467	581	2,047	39,000	1,024	2.6
ULSTER	1,281	446	1,727	53,300	864	1.6
WESTCHESTER	7,434	1,582	9,016	5,400	4,508	83.5
TOTAL	17,829 Tons	10,592 Tons	28,420 Tons	270,400 Acres	14,211 Acres	5.3%

1. Acreage required at a loading rate of two dry tons per acre

2. Acreage required as a percent of total cropland in respective county

3. Figures for Putnam County are deflated due to inaccuracies in septage reporting.

Recommendations for All Counties

1. Initiate a six month sampling and analysis program, in accordance with NYSDEC guidelines, to adequately characterize sludge quality at sites where such data is currently lacking or inconclusive.

2. Discuss with NYSDEC officials the advisability of conducting a sampling and analysis program for domestic septage.

3. Develop appropriate siting criteria and evaluate specific sites within the region to implement a sound management approach for a land application project. Municipalities should be actively involved during the criteria development stage.

4. Where sludge is determined to be "contaminated", an evaluation of the causes should be made. The cost efficiency of addressing the contamination problem at the source versus treating a contaminated sludge should also be evaluated.

5. Develop a detailed cost estimate for each generation and disposal site being considered for development.

6. Consider canvassing the region for potential "dedicated" sites that could be used for disposal of "D"-rated sludges.

OCEAN DISPOSAL

Introduction

Ocean disposal of municipal sludge is accomplished by releasing it into designated areas of the ocean, either from vessels or through outfall pipes. Pipe discharge of sludge is presently not allowed under the federal Clean Water Act and is being phased out. Ocean disposal for communities near the sea has been a relatively low cost disposal alternative.

The federal Marine Protection, Research, and Sanctuaries Act of 1972, which regulates ocean disposal, authorized the United States Environmental Protection Agency to select appropriate ocean disposal sites. Prior to 1981, the New York Bight (12 mile site) was designated. USEPA has permitted dumping at this site since 1981 only with the approval of federal district court. All ocean dumpers are on a phased program to move to a replacement site, known as the 106 mile site, located off the Outer Continental Shelf, 125 miles southeast of the entrance to New York Harbor and 132 miles off Atlantic City, New Jersey. Users must send all their waste to the 106 mile site by 1991.

Site designation is based on proximity to beaches and the effect of disposal on the marine environment. Permits for sludge disposal are based on the volume and characteristics of the sludge and the availability and effect of alternative disposal methods. A permit to ocean dispose of sludge is granted only if the applicant can clearly demonstrate that no practicable alternative is available which has less impact on the total environment.

USEPA selected the 106 mile site over the closer 12 mile site for several reasons. Its primary concern was the degradation of the water quality of the New York Bight (the section of the Atlantic Ocean within the bend of the coastline between Long Island and New Jersey). Although sludge disposal is not the only cause of the degraded condition of this area, it is a contributor to the problem which, USEPA determined, can be alleviated by moving the disposal site.

Process

Barging municipal sludge to an ocean disposal site is relatively simple, accomplished by self-propelled sludge vessels or by sludge barges towed to sea by tug boats. The sludge is then either pumped or released by gravity at the disposal site. Initial dispersal of the waste is aided by turbulence in the wake of the vessel. Volatile hydrocarbons evaporate into the atmosphere, while grease, oil and scum remain on the water surface and may be transportated long distances by winds and currents. The remaining solids either settle to the ocean floor or are retained in clouds dispersed at various depths. Many contaminants are contained within fine particles and can accumulate below the ocean's surface, exposing the organisms in the area to contamination.

There is greater potential for dispersion of solids at the 106 mile site than at the 12 mile site. Although the 106 mile site has a permanent density stratification at about 650 feet, other hydrographic features increase dispersion and the transportation of materials out of the disposal area. These features include prevailing currents and large eddies that break off from the Gulf Stream and traverse the site about 70 days per year. The 106 mile site has been used for the disposal of various materials since 1961. USEPA has not detected any long term adverse ecological effects from these activities to date.

Safety and Health Considerations

Hazards to public health from ocean disposal include bacterial contamination of recreational areas or ingestion of contaminated shellfish.

Major concerns connected with ocean disposal include the accumulation of heavy metals and synthetic hydrocarbons in marine organisms, increased levels of pathogenic organisms, decreased dissolved oxygen levels, increased turbidity levels, and adverse effects to water quality, bottom sediments and marine organisms.

Additional Considerations

USEPA designated the 106 mile site in 1985, anticipating an end to ocean dumping in five years. This position seriously affects the viability of ocean disposal as a long term sludge management alternative.

The increased round trip travel time to the 106 mile site, estimated to be 26 to 30 hours from Northeast coastal cities, may mean that additional sludge storage facilities are needed. Adequate storage must be provided for times when dumping cannot be accomplished due to adverse weather conditions or other causes such as equipment malfunctions. Municipalities will have to redesign or modify ocean-going barges or vessels and dock facilities or else contract for barging services.

Case Studies of Ocean Disposal

A comparison of the cost for Boston, New York City and Westchester to dispose in the ocean is given in Table 27. Case studies for the three municipalities are also provided following the table.

The ocean disposal alternative is least favored by USEPA. The permitting process is difficult and costly to a municipality. Although it is still possible to apply for an interim three year permit, there is no assurance that the currently designated 106 mile site will continue to operate after the present five year authorization. It would be prudent for any municipality applying for a new ocean dumping permit to have plans in place for land based alternatives, as not only would USEPA expect them in order to consider the temporary application, but the eventuality of closure of the 106 mile site would make such precaution mandatory.

TABLE 27

COMPARISON OF COSTS TO USE OCEAN DUMPING AT THE 106 MILE SITE FOR BOSTON, NEW YORK CITY AND WESTCHESTER

Item	Boston[2]	NYC[3]	Westchester[4]
Sludge Volume [1], cu. ft./year	29.3 million	99.4 million	15 million
Sludge quantity, wet tons/day	2,504	8,493	1,282
Dry tons/day, at 3 percent solids	75	255	39
Cost of Hauling $/per cu. ft.	$ 0.57	$ 0.13	$ 0.1025
$/wet ton	$ 18.23	$ 4.17	$ 3.27
$/dry ton	$607	$138	$109
Distance hauled, miles (one way)	275	106	120

Notes:

1. Calculated on the basis of sludge at three percent solids

2. Proposed tug/barge combination, 4,000 to 8,000 long tons (2,240 lbs.). Contract period: January 1988 to January 1991. Current Status: USEPA permit application withdrawn.

3. Tug/barge combination, 15,000 tons. Began operation at 10 percent of total sludge output in May 1986. Balance of output to be transferred by January 1988.

4. Tug/barge combination, 15,000 tons. Began at 100 percent of output (except for incinerated portion). Two year contract period, after which costs may change.

CASE STUDY - NEW YORK CITY

LOCATION: New York, New York

OPERATOR: NYC Department of Environmental Protection
Municipal Building
New York, New York 10007

PROPOSED DISPOSAL METHOD: Ocean disposal of digested municipal sludge at the federally-approved 106 mile site. Now using 12 mile site with federal district court approval.

QUANTITY TO BE DUMPED: 3.1 million wet tons per year, equivalent to approximately 255 dry tons per day at three percent solids. Amount to increase upon completion of North River and Red Hook facilities.

DISTANCE TRAVELED: The approximate distance is 106 nautical miles one way.

HAULING FACILTY: Tug/barge combination; tugs to be under contract; barges under construction by NYC (approximately 15,000 tons capacity).

COST OF OPERATION: As yet undetermined, subject to evaluation of bids. Early estimates indicate approximate cost of $250 per dry ton.

PROPOSED PERIOD OF OPERATION: Ten percent of output shifted from 12 mile site in April, 1986. Balance of hauling to the 106 mile site to be completed by January 1988, and is to continue until 1991.

DISCUSSION: Originally mandated by an Act of Congress to cease all ocean dumping by December 1981, NYC got relief in Federal District Court which eventually resulted in the present plan to shift the dumping location to the 106 mile site. However, this arrangement may itself conclude in 1991 when the 106 mile site will be reevaluated by USEPA. NYC is joined in this action by nearby New Jersey localities and Westchester and Nassau counties, which together accounted for 8.3 million wet tons of sludge during 1983.

The program is proceeding as follows. The existing self-propelled fleet of motorized sludge vessels started hauling to the 106 mile site in April, 1986. Meanwhile, contracts are to be let for construction of 15,000 ton barges, which will be used by contractors. The initial startup has been delayed because of personnel problems.

Bids for the vessels have been received, and came in below engineering estimates. More specific information will be available after the contract is awarded. The existing self-propelled fleet will be used to transfer sludge within the harbor to ocean-going barges.

It is apparent that Westchester County's low cost of approximately $107 per wet ton is not likely to be duplicated by NYC, as the need for inner-harbor transport and sludge handling adds considerably to the total cost. However, this may be somewhat offset by the use of the City's own barge fleet, rather than contracted facilities as are being employed by Westchester.

CONCLUSIONS: NYC is proceeding with a practical plan, rather than relying solely on litigation with the USEPA, as it has been doing until recently. It is still not entirely clear whether the City will eventually have to return to the land-based options that were espoused in the sludge management plan prepared by Camp Dresser and McKee in response to the December 1981 federal order, should public pressure result in the closing of the 106 mile site after 1991. If this be the case, land based technologies will be the only course of action for all municipalities in this region.

CASE STUDY: BOSTON

LOCATION: Boston, Massachusetts

OPERATOR: Massachusetts Water Resources Authority (MWRA)
One Center Plaza
Boston, Massachusetts 02108

PROPOSED DISPOSAL METHOD: Ocean disposal of digested sludge at federally approved 106 mile site.

QUANTITY TO BE DUMPED: 600,000 gallons per day of approximately three percent sludge, equivalent to 75 dry tons per day of primary digested sludge, originating from 435 million gallons per day of sewage from the Boston metropolitan area.

DISTANCE TRAVELED: 275 nautical miles, one-way, 100 to 200 trips per year.

HAULING FACILITY: Tug/barge combination, 1.1 to 2.1 million gallons capacity (4,000 to 8,000 tons).

COST OF OPERATION: $50 million over the three year permit period, equivalent to $607 per dry ton of sludge, or $6.50 per year per resident (on the basis of cost per wet ton, figured at 70 dry tons per day, three percent solids, approximately $19 per wet ton).

PROPOSED PERIOD OF OPERATION: Three years (January 1988 to January 1991).

DISCUSSION: Boston applied for an ocean dumping permit in 1985 to satisfy a court order mandating it to stop polluting Boston Harbor with digested primary sludge discharges. The MWRA proposed to use a tug/barge combination over the 275 mile distance to the 106 mile site to dispose of approximately 900,000 wet tons of sludge per year. Barging was scheduled to begin in January 1988 and conclude in January 1991, approximately when the 106 mile site will be reviewed for redesignation by the USEPA. The Boston long range, land-based disposal facility is supposed to be operating in 1991, so MWRA needed only a three year special permit.

Originally the cost to Boston of disposal was estimted at $19 per wet ton over a six year period (including lead time) representing about $.17 per 1,000 gallons of sewage, or $6.50 per capita per year. The $19 appears exorbitant compared to Westchester's quote of $3.20 per wet ton, but it should be kept in mind that the increased hauling distance (275 miles compared to 106 miles for Westchester) more than doubles hauling costs. Also to be considered is the need for special docking facilities at Deer and Nut islands at a cost of more than $12 million.

USEPA Region II rejected Boston's application as incomplete. The City was supposed to have resubmitted its application, but recently notified USEPA that it would not resubmit the permit request.

The Boston MWRA problem parallels the seven-county situation in several ways:

1. Both are subject to regulatory constraints calling for sludge disposal within the near future with environmental controls that make for difficult and expensive choices.

2. Both are near enough to the 106 mile site to be a viable option.

3. Both are disposing of sludge in small enough quantities to make an application acceptable to USEPA on a quantitative basis.

4. Both can incorporate facilities, such as dewatering, which will make ocean disposal more economical. This will allow the future use of these facilities land based options, as they can be incorporated in the process chain.

NOTE: 1986 amendments to the federal Clean Water Act prohibit Boston from dumping at the 106 mile site.

CASE STUDY: WESTCHESTER

LOCATION: Westchester County

OPERATOR: Westchester County Department of Environmental Facilities

PROPOSED DISPOSAL METHOD: Ocean disposal of digested sludge at federally-approved 106 mile site.

QUANTITY TO BE DUMPED: 30 million cubic feet at approxmately three percent solids over two year contract period.

DISTANCE TRAVELED: The barge haul distance is 106 nautical miles, one way.

HAULING FACILITY: Tug/barge combination, sizes up to 15,000 tons capacity. Contracted with Offshore Transport Corporation, Bayonne, New Jersey.

COST OF OPERATION: The cost of $0.1025 per cubic feet or $109 per dry ton of solids is projected.

PROPOSED PERIOD OF OPERATION: The present two year contract for sludge barging starts in April, 1986. Westchester County intends to continue with ocean disposal at the 106 mile site for the five year period through 1991.

OTHER SLUDGE DISPOSAL METHODS: The County now employs conventional sludge incineration at Ossining and New Rochelle and plans to install a fluidized bed incineration facility at Port Chester.

DISCUSSION: The County has no present plans to improve docking facilities at Yonkers, or to dewater sludges in light of the favorable contract price and possible eventual abandonment of the ocean. There is presently no land based alternative planned for the Yonkers facility.

THERMAL REDUCTION

Introduction

Thermal reduction has been used to treat sludge since the early 1900s. Thermal reduction uses high temperature processes to destroy pathogens and reduce the quantities of sludge requiring disposal. Thermal reduction processes may be divided into incineration and pyrolysis. Heat treatment is generally provided as a pre-treatment process prior to thermal reduction.

Incineration

Incineration is the most common of thermal reduction processes. It is the actual burning of sludge. This combustion process converts organic solids to carbon dioxide and water vapor, while reducing the inorganics to an ash. The types of incinerators generally in use today are multiple hearth, fluidized bed, rotary kiln and cyclonic.

Multiple Hearth Furnace

The mutiple hearth furnace is the most common method of incineration practiced in the United States today. It is fairly simple in operation, reliable, and can handle fluctuating sludge materials and loadings. A section through a multiple hearth furnace (MHF) is illustrated in Figure 5.

The MHF consists of a tall cylindrical combustion chamber with several circular hearths stacked one above the other. A centrally located cast iron shaft runs the full height of the furnace and supports two or four cantilevered rabble arms above each hearth. Each arm contains several rabble teeth that rake sludge spirally across the hearth, below the arms, as the arms rotate with the central shaft. Sewage sludge is fed at the periphery of the top hearth and then raked by rabble teeth toward the center to an opening through which it falls to the next hearth. Here the sludge is rabbled outward to the periphery and so on alternately down the furnace. Sludge and gas streams move countercurrent to one another, sludge passing down through the furnace and eventually becoming ash, and combustion air moving upward over each hearth and exiting as flue gas at the top hearth. Upper hearths are used for vaporization of moisture and cooling of the exhaust gases. Volatile gas and solids are burned in the intermediate hearths, while the lower hearths are used for combustion of slow burning compounds and cooling of the ash. Incineration temperatures for multiple hearth systems range from 1,000°F. on the top hearths to 1,600°F. to 1,800°F. on the middle hearths to 600°F. at the bottom.

Sludge to be burned in the MHF must contain a minimum of 15 percent solids due to the evaporation capacity of the furnace. Generally, wet scrubbers and afterburners must be employed to meet required emission standards and eliminate odors.

FIGURE 5

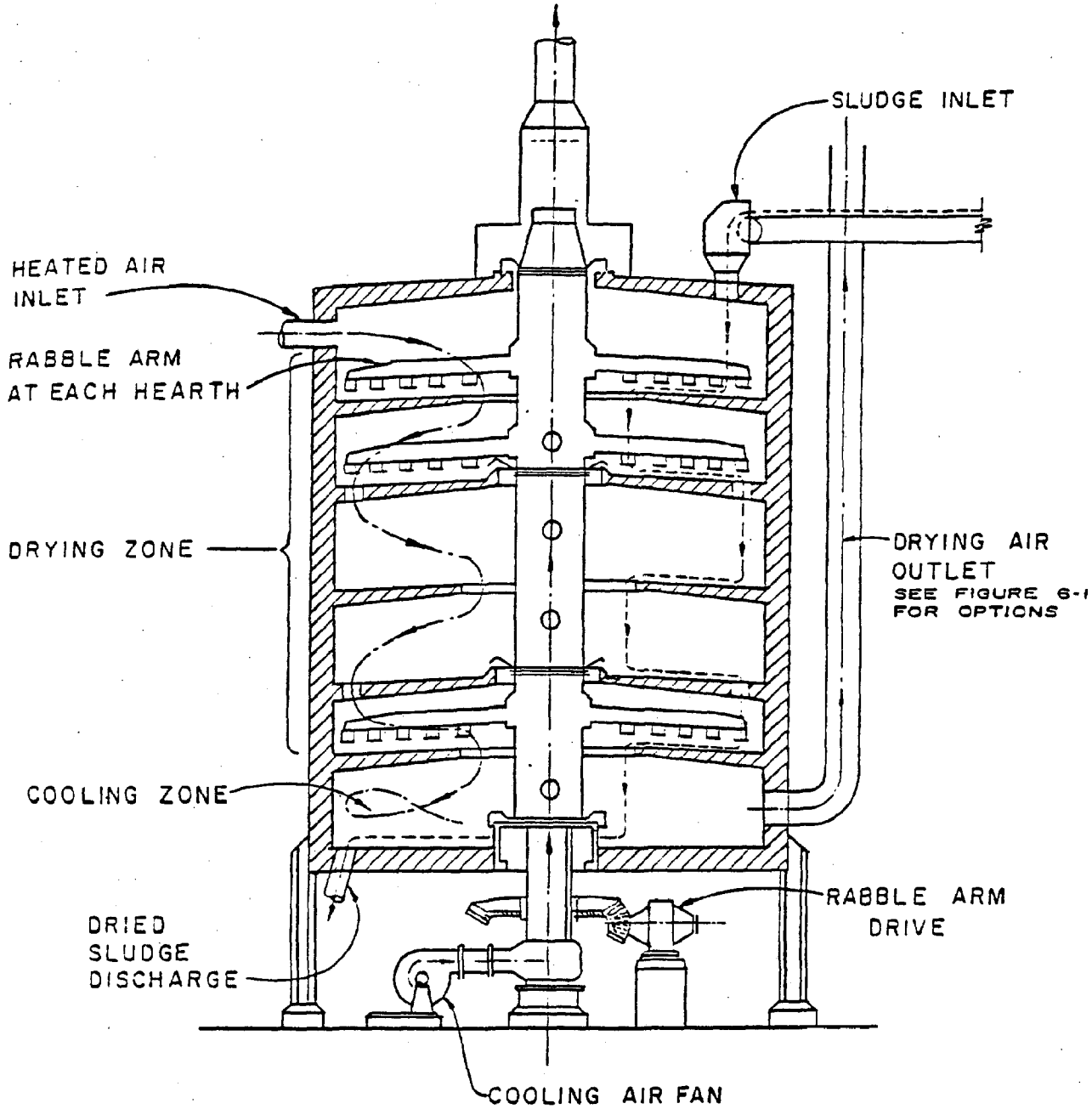

TYPICAL SECTION
MULTIPLE HEARTH DRYER

SOURCE: Los Angeles County/Orange County Sludge Processing and Disposal, April 1977 p. 7-3

As with all heat reduction systems, a considerable amount of ancillary equipment is required (see Figure 6).

Fluidized Bed Incinerator

The fluidized bed incinerator consists of a bed of sand into which sludge is introduced as shown in Figure 7. Air is blown into the area below the sand bed to fluidize the sand and sludge mixture. The combustion of sludge takes place in this expanded sand and sludge bed. The fluidized bed furnace operates at temperatures between 1,300°F. and 1,500°F. These temperatures incite the sand into a violent boiling action, thereby requiring no other mixing devices. The entering sludge dries and burns rapidly in this atmosphere. Most of the ash exits from the furnace in the exhaust gas. Like the MHF, fluidized bed furnaces require a substantial amount of ancillary equipment including wet scrubbers (see Figure 8). One major advantage of the fluidized bed furnace is that there are no moving parts.

Rotary Kiln Furnace

The rotary kiln furnace is not widely used for sludge incineration. It operates similarly to the multiple hearth in that sludge is dried in the upper area and burned in the lower region. Like the flash dryer, it has been used most widely for sludge drying but also has been applied to combustion of sludge with refuse. Operation of a rotary kiln dryer is described later on in this section.

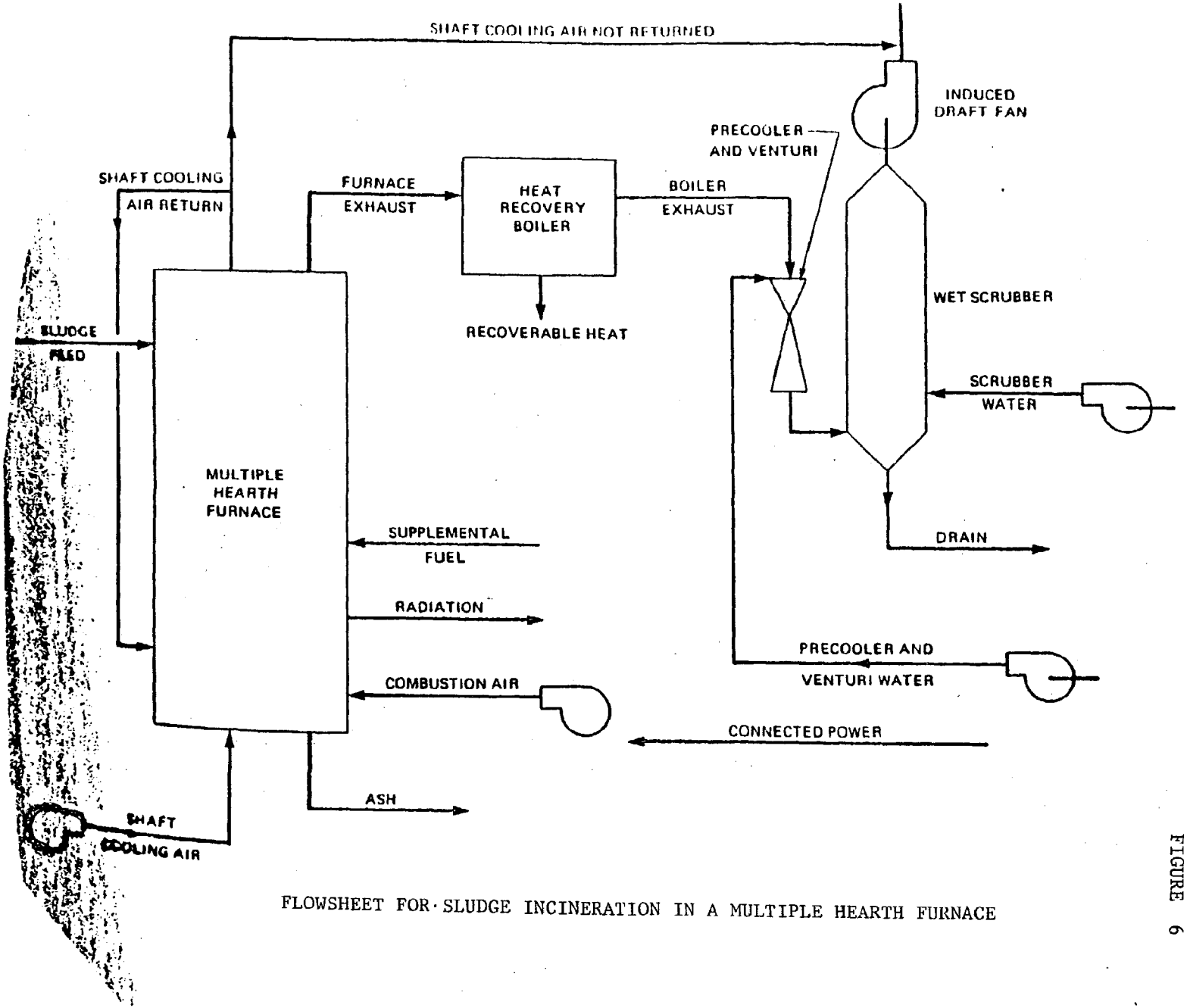

FIGURE 6

FLOWSHEET FOR SLUDGE INCINERATION IN A MULTIPLE HEARTH FURNACE

SOURCE: EPA Process Design Manual Sludge Treatment and Disposal, September 1979, p. 11-37

FIGURE 7

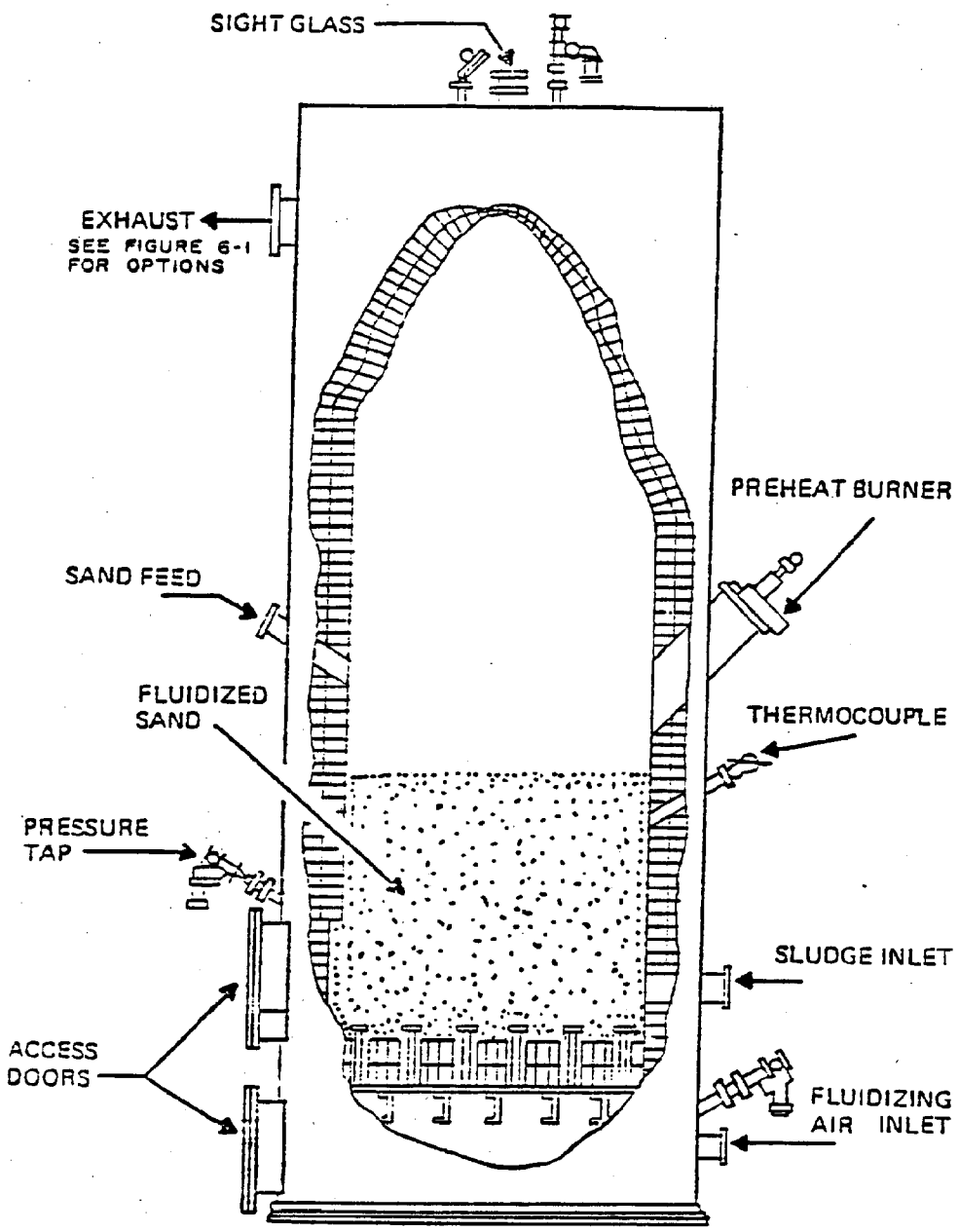

TYPICAL SECTION OF A FLUID BED REACTOR

SOURCE: Los Angeles County/Orange County Sludge Processing and Disposal, April 1977, p. 7-5

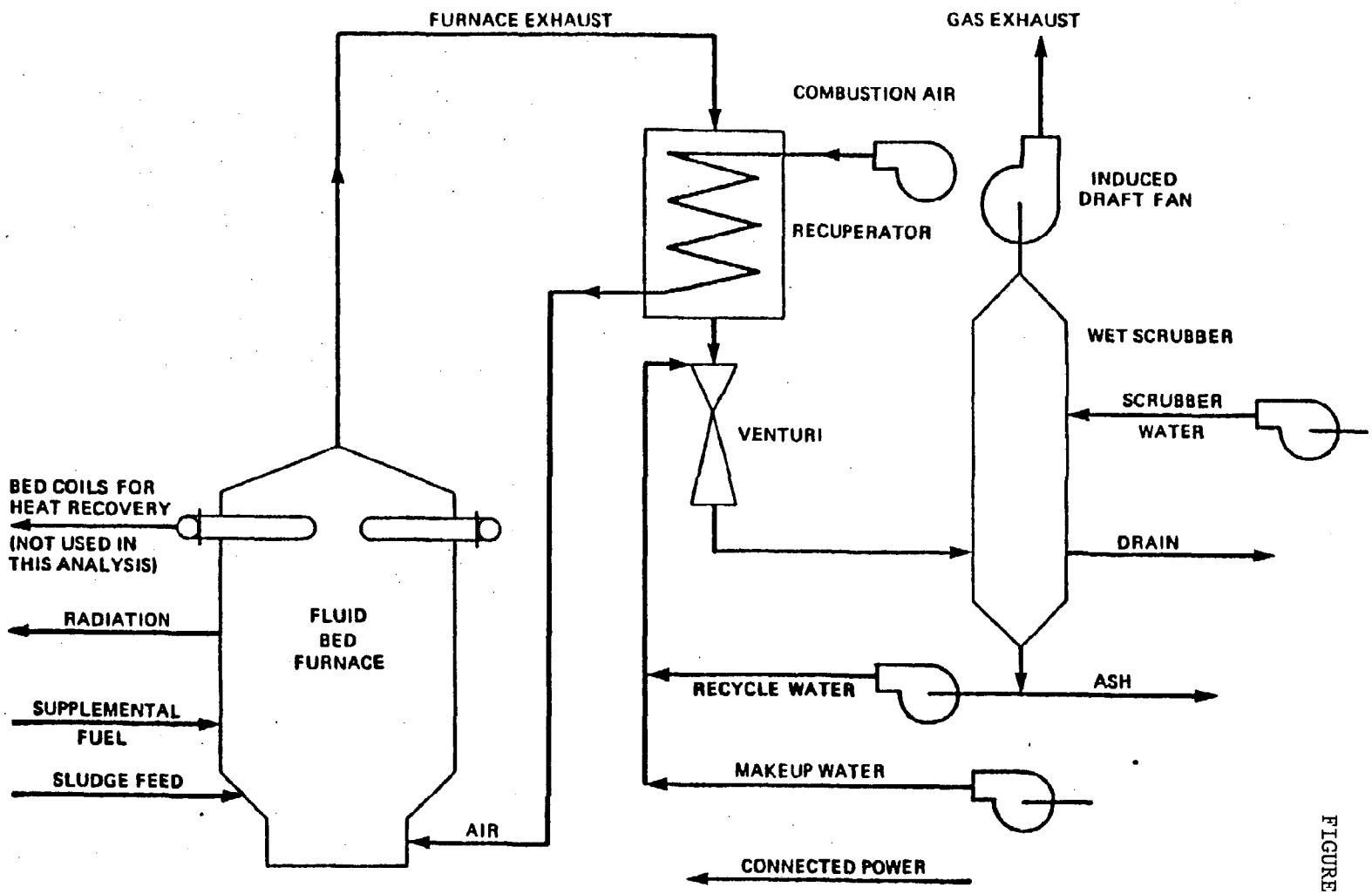

FIGURE 8

FLOWSHEET FOR SLUDGE INCINERATION IN A FLUID BED FURNACE

SOURCE: EPA Process Design Manual Sludge Treatment and Disposal, September 1979, p. 11-52

Co-incineration of Sewage Sludge and Municipal Refuse

To achieve co-incineration, municipal solid waste and sludge are burned by a mutually compatible process. Only one co-incineration facility exists in New York, at Glen Cove, Long Island. It is a mass burn furnace in which sludge is mixed with municipal solid waste in a ratio of approxmately 1 to 7.

Technology for the express purpose of combined incineration of sewage sludge and municipal refuse is still evolving. There are presently four different approaches to co-incineration:

1. combustion of dewatered sludge in a refuse incinerator
2. combustion of pre-dried sludge in a refuse incinerator
3. use of refuse derived fuel in a multiple-hearth sludge incinerator
4. use of refuse derived fuel in a fluidized bed sludge incinerator.

All the major techniques for combined incineration have been tried in the U.S. and have experienced problems. Over the past 30 years, 23 facilities in the U.S. have co-incinerated refuse and sewage sludge. Only one facility is currently operating on a regular commercial basis, 18 have shut down, and the remaining four have reverted to single purpose incineration. Six co-incineration facilities were being planned during the mid 1970s. Of these, only one is operating. One is still being considered, but plans for the remaining four facilities have been dropped.

A variety of operation and maintenance problems have plagued virtually every co-incineration facility in the U.S. It has proved difficult to maintain combustion in refuse incinerators when partially dewatered sludge is added. Although thermal drying of the sludge mitigates combustion-related problems, the dryers themselves are subject to plugging, corrosion, and odors, as well as fire and explosion. Technical obstacles to burning refuse-derived fuel in conventional multiple-hearth or fluidized bed sewage sludge incinerators include ensuring the reliability of refuse preparation systems and controlling combustion.

Planning and implementing new co-incineration projects in the U.S. is often hampered by institutional differences among groups responsible for disposing of sludge and of refuse. Whereas management authority for sludge is vested in centralized public bodies, the collection, transportion, and disposal of municipal refuse is usually managed by a combinaton of decentralized public and private bodies. These institutional differences hinder the integration in municipal waste management programs necessary for the implementation of co-incineration facilities. Moreover, the criteria employed in siting a sludge treatment and disposal plant are essentially different from those used in locating a refuse incinerator.

Very little data is available on particulate emissions from combined incineration of sewage sludge and municipal refuse. Operating a multiple-hearth unit in a pyrolysis (starved air) mode does not appear to offer any significant reduction of uncontrolled emissions when prepared municipal refuse is used for fuel. It is doubtful that all the various approaches to coincineration will have similar emission characteristics, although this is a topic deserving further investigation.

Despite the general lack of technical success with co-incineration projects, the costs of combined incineration of sewage sludge and municipal refuse are still attractive when compared to the costs of burning these wastes separately. Co-incineration is also attractive from the standpoint of energy conservation. Thus, the incentives to co-incinerate are clear, yet until the various technical problems and uncertainties are overcome, little growth in the use of co-incineration can be expected over the next five years.

Incineration of Dewatered Sludge in a Conventional Refuse Incinerator

The oldest, simplest, and most direct method of achieving combined incineration is to burn partially dewatered sludge (i.e., 70 to 80 percent moisture content) in a conventional municipal refuse incinerator, depicted in Figure 9. The sludge can be fed separately into the furnace by either spraying it into the combustion chamber or by dumping it onto the grate. Alternatively, the sludge can be mixed with the refuse prior to entering the incinerator.

Although mass burning has the advantage of simplicity, it has not proved very successful. The major problem encountered with this technique relates to combustion. Conventional incinerators usually provide insufficient time for the sludge to burn completely. In addition, too little heat is generated from the burning refuse to evaporate the moisture and combust the sludge. These problems are compounded by difficulties in distributing the sludge evenly within the furnace. For the most part, co-incineration through mass burning has proved unsuccessful both in this country and in Europe, although two future projects in the U.S. are expected to use it.

Co-incineration of Pre-dried Sludge in a Conventional Refuse Incinerator

As a means of overcoming the problems associated with burning sludge directly in a refuse incinerator, a number of facilities have installed systems to dry sludge to less than 20 percent moisture content before it enters the furnace. A wide variety of different drying systems have been employed. Direct contact dryers, heated by flue gas, steam-heated rotary dryers, flash evaporaters, spray dryers, and multi-effect evaporators have all been used in the past. Dried sludge is then mixed with the refuse at a ratio of approximately 10 parts refuse to one part sludge and fed into the incinerator.

FIGURE 9

CODISPOSAL SYSTEM
PROCESS SCHEMATIC & MATERIALS' BALANCE

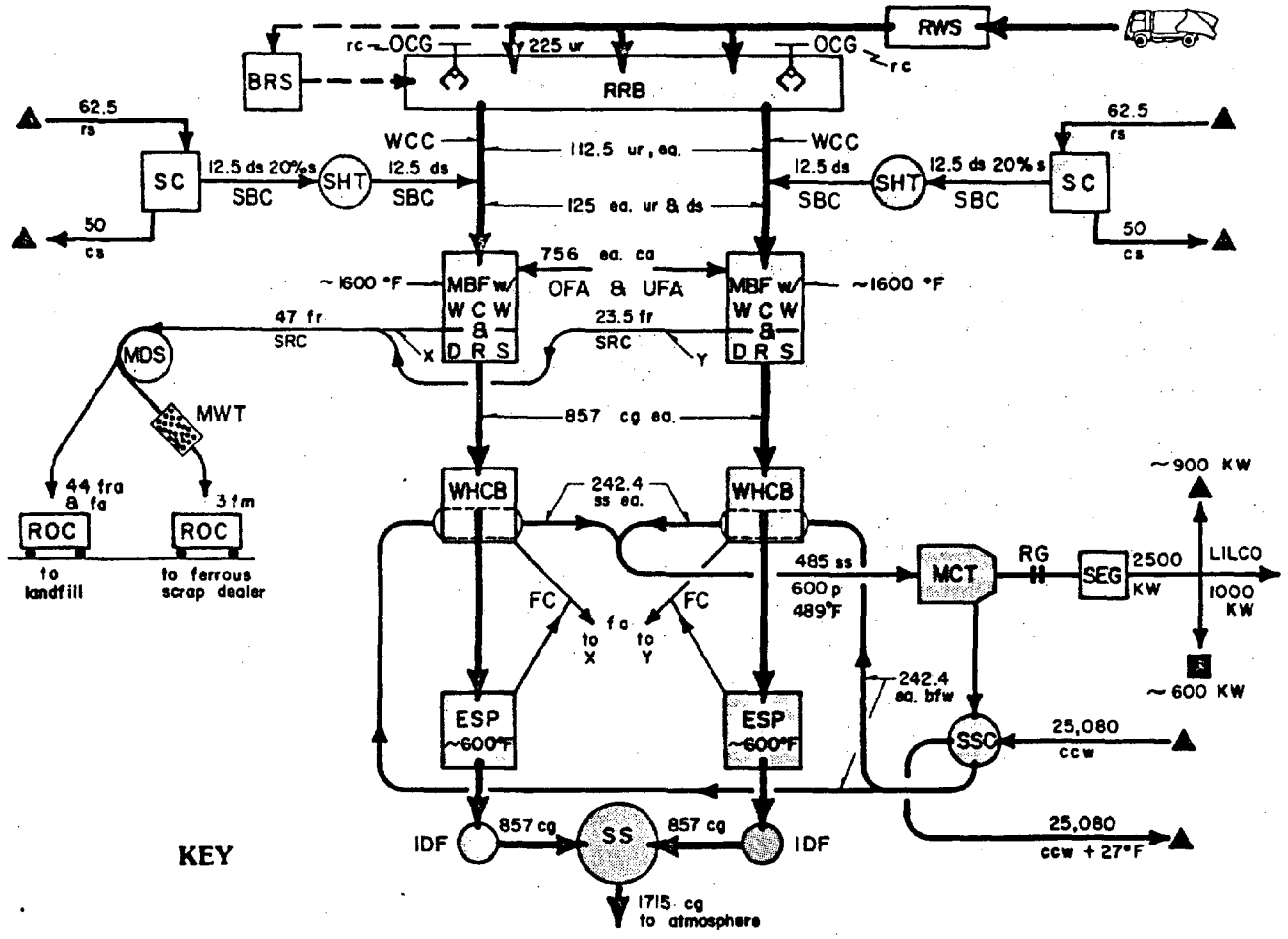

MAJOR EQUIPMENT

BRS — Bulky Refuse Shear
DRS — Double Reciprocating Stoker
ESP — Electrostatic Precipitator
FC — Flyash Conveyor
IDF — Induced Draft Fan
MBF — Mass Burning Furnace
MCT — Multi-stage Condensing Turbine
MDS — Magnetic Drum Separator
MWT — Metal Washing Trommel
OCG — Overhead Crane & Grapple
OFA — Overfire Air
RG — Reduction Gear
ROC — Roll-off Container
RRB — Refuse Receiving Bin
RWS — Refuse Weighing System
SBC — Sludge Belt Conveyor
SC — Sludge Centrifuge
SEG — Synchronous Electric Generator
SHT — Sludge Holding Tank
SRC — Siftings & Residue Conveyor
— Steel Stack
SSC — Steam Surface Condensor
UFA — Underfire Air
WCC — Water-cooled Chutes
WCW — Water-cooled Walls
WHCB — Waste Heat Convection Boiler

PROCESS MATERIALS

bfw — boiler feed water
ca — combustion air
cg — combustion gas
cs — centrate sludge
ccw — condensor cooling water
ds — dewatered sludge
fa — flyash
fm — ferrous metals
fr — furnace residue
fra — furnace residue ash
rs — raw sludge
ss — saturated steam
ur — unprepared refuse

QUANTITIES & SYMBOLS

All quantities in tons per day except kilowatts

ea. — each
F — Fahrenheit
KW — Kilowatts
p — gage pressure (psig)
rc — radio control
s — solids (sludge)
w/ — with
▲ — Wastewater Treatment Plant
■ — Codisposal/Energy Recovery Facility
LILCO — Long Island Lighting Co.

SOURCE: mmb Glen Cove Corporation

This method has been relatively successful. Pre-drying mitigates the combustion problems associated with the use of only partially dewatered sludges, such as loss of BTU value and accumulation of non-combustible materials at the bottom of the incinerator (slag). Also, separation of the drying process from the combustion process simplifies furnace operations. Nonetheless, this technique has not been entirely devoid of problems. A major difficulty has been the prevention of rapid corrosion in the dryers. Clogging and general handling problems have also been encountered with the dried sludge. Odors given off by the dryers (particularly direct contact dryers) has been another obstacle. Flash evaporators are unattractive because of the potential for explosion. Nonetheless, the majority of facilities currently coincinerating in Europe, as well as the only commercially operating plant in the U.S., can be classified as pre-dried type units.

Combustion of Refuse in a Multiple-Hearth Sludge Incinerator

In this arrangement, prepared municipal refuse is used in place of fossil fuels for burning sludge in a multiple-hearth furnace (MHF). The raw refuse is prepared by mechanically separating non-combustibles and subsequently shredding the remaining organic portion into uniform particle sizes. This refuse derived fuel (RDF) can be further treated chemically to produce a fine powder or pressed into briquettes or pellets. The RDF is then either mixed with the sludge and fed together into the top of the incinerator, or fed separately into one of the lower hearths.

Although at least three units of this type operate in Europe, it has not been fully demonstrated in the U.S. Some testing has been done at a demonstration facility in Contra Costa County, California. Based on limited operating data, the major problem with this design is controlling the rate of combustion in the incinerator. Localized overheating caused by periodic intense heat release from the RDF can lead to structural failures in the rabble shaft castings. To compensate for the higher heat release rate associated with co-burning RDF, a greater volume of cooling air is required. If air flow rates are higher than designed, the movement of the sludge and refuse through the hearths could be impeded. Besides installation of all the facilities required to produce the RDF, substantial modifications to the incinerator itself are necessary in order to co-incinerate.

The major benefit associated with this type of system is the reduction in fuel costs for sludge incineration. Fuel costs represent the largest share of the total annualized costs of operating MHF incinerators.

Combustion of RDF in a Fluidized Bed Sludge Incinerator

This approach is analogous to that described above, except that co-incineration would take place in a fluidized bed sewage sludge incinerator. The RDF can either be introduced into the furnace as dry pellets, fluff, or powder. The fluidized bed incinerator is comprised of a vertical, cylindrical, heat resistant, lined vessel with a perforated grid in the lower section which suports a sand bed. A reaction vessel contains

the sand fluid bed, there is a space above the bed called a freeboard, and a gas distribution plate above the freeboard space. Sludge is fed into the fluidized bed region with some combustion of the sludge occurring in the freeboard space. As sludge burns out primarily in the bed, the finer ash particles are then swept from the bed.

Compared to co-incineration in a multiple-hearth incinerator, use of a fluidized bed furnace offers a number of advantages. Foremost is that combustion is more easily controlled in a fluid bed, and furnace operation is less vulnerable to changes in the sludge feed rate or moisture content, due to both the excellent mixing characteristics and longer residence time typical of these incinerators.

As in the case of multiple-hearth furnaces, however, the incinerator must be modified significantly to burn RDF. Besides the addition of a feeding mechanism, a system is needed to separate inert RDF materials that build up in the sand bed. The interior of the furnace shell must also be protected from the corrosive condensation of hydrochloric acid (HCl) and hydrofluoric acid (HF) evolving from combustion of plastic materials.

Co-incineration Projects in the U.S.

All the available techniques for combined incineration of sewage sludge and municipal refuse have been at one time or another tried in the U.S. in either commercial or pilot-scale plants. No single approach has emerged as a definitively "best" technique, although burning pre-dried sludge in a conventional refuse incinerator has been attempted most often.

A comprehensive list of former, present, and planned co-incineration projects in the U.S. is provided in Table 28. Only one facility, at Stamford, Connecticut, is currently co-incinerating on a regular commercial basis. The facility in Glen Cove, New York is operating. Of the 32 facilities listed, 18 units that formerly were co-incinerating have been shut down or abandoned completely and four facilities have reverted to single purpose incineration. Of the six major co-incineration projects considered during the mid-1970s, only the Glen Cove facility is currently operative.

In quite a few cases, plants that have shut down have done so for technical reasons. Operating problems have plagued some of the new, as well as the older, co-incineration facilities. The Ansonia, Connecticut, Duluth, Minnesota and Holyoke, Massachusetts plants have each experienced equipment failures. Even the Stamford plant has been unable to co-incinerate on a continuous basis since the facility began operating in 1975. New pyrolysis reactors have yet to demonstrate an adequate level of operating reliability when processing refuse alone, and the feasibility of co-incinerating in these units is still undetermined.

Economic and Institutional Considerations for Co-Incineration

From the standpoint of annualized operating costs, co-incinerating sludge and refuse appears to be an attractive waste management approach in situations where landfilling or other disposal options are unavailable. In contrast, there are numerous institutional barriers to co-incineration that can negate the economic incentives for co-disposal.

TABLE 28

CO-INCINERATION FACILITIES IN THE UNITED STATES

Location	Capacity	Design Parameters	Operating History	Current Status
Holyoke, Massachusetts	225 tpd MRF 10 tpd sludge	Twin Fixed-Grate MRF Incinerators	Began operating in 1965	Shut down in 1976
Lansing, Michigan	DNA	MHF Sludge Incinerator	Attempted to Coincinerate	Burns sludge only
Trenton, Michigan	DNA	Mass-Burning MRF Incinerator Sludge Flash-Evaporated	Began operations in 1964. By 1975, sludge dried and landfilled	Shut down
Duluth, Minnesota	160 tpd RDF 70 tpd sludge	FBI sludge Incinerator Sludge Pre-dried	Began operating in 1979 Shut down due to explosion	Burns sludge only. No plans to resume coincineration
Minneapolis/St. Paul, Minnesota	400 tpd MRF 60 tpd sludge	Rotary kiln in Pyrolysis Mode	Planned for 1980 Start-up	Plans Abandoned in 1976
Vicksburg, Mississippi	DNA	Rotary kiln	DNA	Abandoned
Glouchester City, New Jersey	DNA	Rotary kiln	DNA	Abandoned
Tenafly, New Jersey	DNA	Mass-burning MRF Incinerator Sludge Flash-Evaporated	DNA	Shut-down
Glen Cove, New York	250 tpd MRF 25 tpd sludge	Twin Reciprocating-Grate MRF Incinerators Sludge Dewatered	Began operating in 1983	In Start-up
Newburg, New York	DNA	Mass-burning MRF Incinerators Sludge Flash-Evaporated	Began operating in 1970, Redesigned in 1974.	Abandoned
Orchard Park, New York	DNA	Torrax Air-Blown Shaft Furnace (Carborundum Test Facility)	DNA	DNA

DNA = Data Not Available

CO-INCINERATION FACILITIES IN THE UNITED STATES

Location	Capacity	Design Parameters	Operating History	Current Status
Waterville, New York	DNA	Mass-burning MRF Incinerator Sludge Flash-Evaporated	Began operating in 1940	Abandoned
Franklin, Ohio	150 tpd RDF 30 tpd sludge	FBI Incinerator MRF Wet-Pulped	Began operating in 1971	Shut-down in 1979
Bloomburg, Pennsylvania	DNA	Mass-burning MRF Incinerator Sludge Flash-Evaporated	Began operating in 1953	Abandoned
Harrisburg, Pennsylvania	720 tpd MRF 50 tpd sludge	Twin Waterwall MRF Incinerators Sludge Dewatered	Expected start-up in 1979	Coincineration
Hershey, Pennsylvania	DNA	Mass-burning MRF Incinerators Sludge Dewatered	Operated from 1963 to 1972	Abandoned
Whitemarsh, Pennsylvania	75 tpd MRF 6 tpd sludge	Mass-burning MRF Incinerator Sludge Dewatered	DNA	Abandoned
Georgetown, South Carolina	DNA	Rotary kiln	DNA	Abandoned
Memphis, Tennessee	7400 tpd MRF 1225 tpd sludge	MRF Conversion to RDF MRF Incinerator in Pyrolysis Mode	Feasability Studies Completed	Plans Abandoned
South Charleston, West Virginia	200 tpd MRF	Purox Oxygen-Blown Shaft Pyrolysis Furnace (Union Carbide)	Began testing in 1975	Refuse only
Kewashum, Wisconsin	25 tpd MRF	Mass-burning MRF Incinerator	Began operating in 1954	Abandoned
Neensh-Menash, Wisconsin	150 tpd MRF	Twin Traveling-Grate MRF Incinerators Sludge Flash-Evaporated	Began operating in 1958	Shut-down in 1959

DNA = Data Not Available

TABLE 28

CO-INCINERATION FACILITIES IN THE UNITED STATES

Location	Capacity	Design Parameters	Operating History	Current Status
Contra Costa County, California	1200 tpd MRF 160 tpd RDF 95 tpd sludge	MHF sludge Incinerator/Pyrolysis Mode	Planned; Feasability Study completed	Abandoned Plans For Coincineration
San Diego, California	DNA	Flash Pyrolysis (Occidental Test Facility)	DNA	DNA
Ansonia, Connecticut	40 tpd MRF 13 tpd sludge	Mass burning MRF Incinerator Sludge Pre-dried	Ceased operations in 1977 due to fire.	Burns Refuse Only. Sludge is dried and landfilled
Stamford, Connecticut	360 tpd MRF 10 tpd sludge	Twin Rocking-Grate MRF Incinerators	Began operations in 1975.	Still coincinerating
Waterbury, Connecticut	300 tpd MRF	Twin Mass-burning MRF Incinerators; Sludge Flash-Evaporated	Began operations in 1951. Ceased burning sludge in 1975.	Shut down in 1978
West Albany, Indiana	160 tpd MRF	Twin Traveling-Grate MRF Incinerators Sludge Flash-Evaporated	Began operating in 1959	Abandoned
Louisville, Kentucky	850 tpd MRF	Reciprocating-Grate MRF Incinerators Sludge Flash-Evaporated	Began operating in 1959	Burns MRF only
Auburn, Maine	150 tpd MRF 10 tpd sludge	Consumat Modular MRF Incinerators Sludge Pre-dried	Groundbreaking Scheduled for 1979	Plans Abandoned
Baltimore, Maryland	DNA	Landgard Rotary Kiln (Monsanto Test Facility)	DNA	DNA
Frederick, Maryland	DNA	Mass-Burning MRF Incinerator Sludge Dewatered	Coincineration Unsuccessful	Abandoned

DNA = Data Not Available

SOURCE: USEPA Second Review of Standards of Performance for Source Sludge [illegible]

Costs of Co-incineration

The most comprehensive asssessment of the costs of co-incineration was conducted in 1976 by Roy F. Weston, Inc. for the USEPA. In this study, the costs for separate incineration of sludge and refuse were compared to the costs of four combined incineration systems. Costs for non-thermal disposal options are also used for comparison. The co-incineration designs considered include a multiple-hearth unit burning RDF, a Torrax® pyrolysis shaft furnace, and two systems based on the use of a conventional refuse incinerator with pre-drying (either direct or indirect) of the sludge.

The principal conclusion of this analysis was that for all combustion technologies considered, co-incineration had the lowest annualized costs. All four combined incineration systems were shown to be less costly to build and operate when compared to the costs for incinerating these wastes separately. Burning dried sludge in a mass-burning refuse incinerator was the lowest cost option. However, all types of incineration involved higher costs than land or ocean disposal.

The capital costs of constructing a co-incineration facility could, nonetheless, be prohibitive to many municipalities. For example, the capital cost of a multiple-hearth furnace burning refuse-derived fuel was estimated to be nearly four times higher than the same furnace burning fuel oil.

Institutional Factors Affecting Co-incineration

Institutional issues embody a number of complex legal, organizational, and administrative factors which relate to waste water and solid waste management. These factors often serve to discourage combined disposal of municipal sewage sludge and refuse.

Water- and solid waste-related management programs have evolved along different paths. While water quality programs were initiated through public action, solid waste handling and disposal has remained predominantly a private concern. Water quality management programs are highly centralized within public bodies. In contrast, solid waste management is much less centralized, with authority vested in various groups, some private and some public. Moreover, different aspects of solid waste removal, collection, transport, processing, storage, and disposal can be controlled by different entities. These organizational differences alone are obstacles to integrating municipal waste management and planning. From the perspective of those responsible for municipal refuse management, there is no real incentive to engage in a co-incineration project, especially when refuse disposal is carried out by private companies.

Siting a co-disposal facility creates numerous problems since the criteria by which potential sites are judged are not mutual. The location of a sewage treatment plant is determined by hydrological boundaries. Collection and disposal of municipal refuse is organized according to municipal boundaries. Rarely do these locational parameters overlap.

Municipal Waste Characteristics

Municipal solid waste consists of residential, commercial, and other wastes, excluding hazardous wastes. The high organic content (paper, plastics, food, textiles, etc.) of this waste is desirable for incineration in resource recovery plants as it is this organic material which is combustible. It is the same part of the waste stream that is least desirable for landfilling because it can produce leachate (contaminated wastewater from a landfill) and methane gas. Metals and glass are non-combustible and make up the largest fraction of the ash residue after burning. Iron is typically the largest portion of the metal constituent by weight.

Prospects for Growth of Co-incineration

Little growth in co-incineration is likely to occur over the next five years because co-incineration has yet to be widely demonstrated as a reliable disposal technique. The failure of the vast majority of the systems put into operation in the past has clearly impeded the widespread acceptance of the technology. However, plants are currently operating in Stamford, Connecticut; Glen Cove, New York; and Harrisburg, Pennsylvania.

Countering these technical uncertainties, however, are the economic incentives to co-incinerate refuse and sewage sludge. With the rise in the cost of fossil fuel over the past five years, these incentives have become more attractive. Also, the costs of incineration should approach the costs of land disposal as a result of stricter regulations, increased enforcement, and declining availability of land disposal sites.

Residual waste streams associated with resource recovery activities include processibles, non-processible bottom fly ash residues, as well as various types of wastewaters. Non-processible materials contained in municipal solid waste ordinarily are not accepted at a resource recovery facility. These materials consist largely of construction and demolition debris and bulky white goods such as appliances.

Characteristics of Ash Residue

When solid waste and sludge are burned, an ash residue results which requires disposal. The total amount of ash remaining from the combustion process is generally equal to about 10 to 15 percent of the original volume of processible municipal solid waste, or about 20 to 25 percent of the original weight.

The ash residue produced as a result of the combustion process consists of bottom ash, which collects at the bottom of the furnace chamber, and fly ash, which is the fine matter extracted from the flue gas. Particulate matter can be removed using a variety of air cleaning equipment including electrostatic precipitators, bag houses, or other devices. In most cases,

the bottom and fly ash is combined and quenched with water to cool the material and control dust. After quenching, ash will typically contain approximately 20 percent water. This amount of moisture prevents dust, but leaves no free liquid in the material.

The composition of the ash depends on the composition of the waste burned, and will vary according to the technology used to process the waste. Mass burn technology, which is being proposed most frequently at this time, usually burns over 95 percent of organic matter.

A typical chemical composition of ash residue from a mass burn facility is listed in Table 29. The largest constituent by weight is glass which is almost completely non-reactive (inert). Iron and aluminum combined with oxygen burn during the combustion process and comprise about 15 percent of the residue by weight. Other materials, such as calcium, magnesium and zinc form oxides which are present in smaller quantities. The solubility of some of these residue components depends on whether they are basic or acidic. Acidity tends to increase solubility, and promotes leaching. The acidity of ash can be reduced by adding lime or other basic material to the ash, similar to the way a gardener might add lime to a lawn to reduce the acid nature of the soil.

Ash residue will contain some heavy metals such as lead, zinc, or cadmium so toxicity must be considered. Organic compounds, including those having toxic potential, such as dioxins or furans, may also be contained in the residue in small quantities, although the majority of these compounds would have been destroyed in the combustion process.

Following EPA procedures, the toxicity of ash residue generated at various municipal incinerators, co-disposal facilities and resource recovery facilities is assessed using the extraction procedure (EP test) designed to identify some toxics that could leach from the given waste material. If the test identifies any metal or regulated organic chemical at a concentration greater than 100 times the National Interim Drinking Water Standards, it is defined as toxic and hazardous and requires special handling and disposal under the Federal Resource Conservation and Recovery Act (RCRA).

Most toxic organic compounds will be destroyed if the combustion process is properly designed and operated to maintain the elevated temperatures required and if adequate burning time (residence time) in the combustion chamber is ensured. Tests have confirmed that dioxin, one organic of concern, has been found in ash produced by the operating resource recovery facility in Glen Cove, but this type of test data on ash residue is limited and no long term studies exist. Recent EP toxicity tests performed on ash residue from plants in Westchester and Cattaraugus counties in New York, and Pinellas County, Florida have all indicated that the combined ash passes the EP toxicity standards and all have been classified as non-hazardous. Table 30 presents the results of EP toxicity tests performed by the U.S. Environmental Protection Agency on ash residues from a mass burn facility, as well as data from Westchester and Cattaraugus counties and Baltimore, Maryland facilities. Actual concentrations are compared with the maximum allowable concentrations.

TABLE 29

TYPICAL CHEMICAL ANALYSIS OF CARBON AND MOISTURE-FREE INCINERATOR RESIDUE

Material	Molecular Formula	Percent
Silicon dioxide (silica, primarily from glass)	SiO_2	59.8
Aluminum oxide (alumina)	Al_2O_3	9.8
Iron oxide	Fe_2O_3	4.0
Titanium dioxide	TiO_2	1.0
Calcium oxide (lime)	CaO	11.9
Magnesium oxide	MgO	3.0
Zinc oxide	ZnO	0.4
Lead oxide	PbO	0.1
Copper oxide	CuO	0.1
Manganese oxide	MnO	0.3
Sodium oxide	Na_2O	6.1
Potassium oxide	K_2O	0.5
Sulfur trioxide	SO_3	0.9
Phosphorus pentoxide	P_2O_5	0.5
Other		1.6
Total		100.0

Source: Collins, Robert J., "Promising Applications for Municipal Incinerator Residues," Proceedings of the Sixth Mineral Waste Utilization Symposium, US Bureau of Mines, IIT Institute, Chicago, May 2-3, 1978.

TABLE 30

EP TOXICITY TEST RESULTS
OBSERVED CONCENTRATIONS

Contaminant	Maximum Permitted Concentrations (maximum allowable concentrations in EP test (ppm)) *		Large Mass Burning Plant - Composited Fly Ash and Bottom Ash as Landfilled (ppm)		
		(1)	(2)	(3)	(4)
Arsenic	5.0	<0.01	0.31	0.0025	0.01
Barium	100.0	0.16	0.40	0.184	0.54
Cadmium	1.0	0.99	<0.005	0.251	0.20
Chromium	5.0	0.02	<0.05	0.039	<0.001
Lead	5.0	3.68	<0.01	0.337	1.53
Mercury	0.2	<0.001	<0.10	0.0001	<0.001
Selenium	1.0	<0.012	<0.062	0.0025	<0.01
Silver	5.0	<0.001	<0.05	0.001	<0.005

(1) Cattaragus County, NY, NYSDEC, 1984

(2) Westchester County, NY, RESCO Ash Residues: City of New York, Department of Sanitation, Final Environmental Impact Statement, Proposed Resource Recovery Facility at the Brooklyn Navy Yard, 1985.

(3) Steam-generating municipal solid waste incinerator, capacity greater than 1000 tpd. No industrial waste burned. Adapted from Waste Age, February 1981.

(4) Baltimore RESCO Ash Residues: City of New York, Department of Sanitation, Final Environmental Impact Statement, Proposed Resource Recovery Facility at the Brooklyn Navy Yard, 1985.

SOURCE: NYSDEC, City of New York, "Waste Age", Department of Sanitation

* ppm = parts per million

Pyrolysis and Starved Air Combustion

These two processes refer to the thermal decomposition of sludge in a zero air or low air concentration atmosphere. They do not result in complete combustion of the sludge. Like incineration, these processes result in a drastically reduced volume of wastes which are sterilized. However, unlike incineration, the incomplete combustion process produces products consisting of combustible materials. As such, they must be handled subsequent to the pyrolysis process. Figure 10 presents a schematic of a pyrolysis plant.

With the exception of fluidized-bed furnaces, all the incineration techniques described previously can be operated in a starved air or pyrolysis mode. Thus, pyrolysis represents not so much a distinct technology type as it does a general operating technique, applicable to a number of alternative technologies. Four incinerators specifically designed to operate as pyrolytic reactors are presently under development.

These incinerators include the Purox® (Union Carbide), Torrax® (Carborundum), Landard® (Monsanto), and the Flash Pyrolysis (Occidental) systems. Both the Purox® and Torrax® processes are based on a vertical shaft reactor design; the Landgard® system uses a rotary kiln. All these technologies are being developed primarily for municipal refuse. Each, however, has also been considered for co-incineration. Some testing has been done for this purpose.

In a conventional refuse incinerator, combustion under starved air conditions is the most common operating technique. Generally, however, combustion air is added at only slightly less than theoretical rates. The exhaust gases from the furnace are then combusted in an afterburner. The smaller, modular refuse incinerators that have been widely used since the early 1970s are almost always designed to operate under starved air conditions.

Operating a multiple hearth sewage sludge incinerator in a pyrolysis mode is a technique developed specifically for co-incinerating refuse. As described earlier, controlling the rate of combustion is the major problem with co-incinerating in these furnaces. These problems are effectively overcome by operating the furnace as a pyrolysis reactor. During a series of comprehensive tests conducted on an MHF at the Contra Costa County, California demonstration project, operating the furnace in a pyrolysis mode emerged as the preferred means of co-burning refuse with sewage sludge. The major manufacturers of multiple hearth furnaces also recommend that the unit be operated in a pyrolysis mode when co-incinerating municipal refuse. Other benefits associated with this approach are an increased furnace capacity and the capability for pyrolysis to become autogenous with sludges having a low solids content.

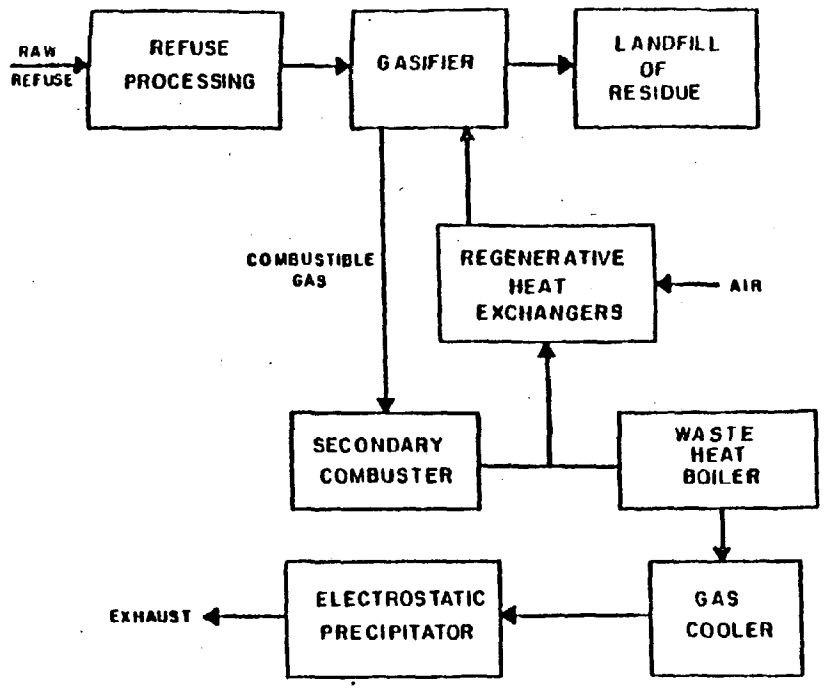

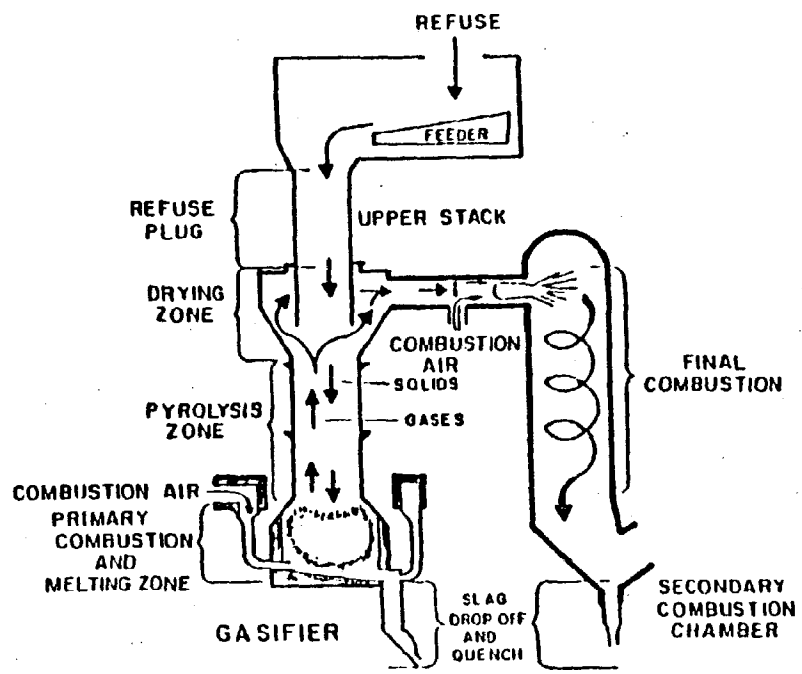

FIGURE 10

CARBORUNDUM'S TORRAX PYROLYSIS FACILITY

SOURCE: EPA Process Deisgn Manual Sludge Treatment and Disposal, September 1979, P. 11-87

The major disadvantage of all types of pyrolysis is the greatly increased complexity of the system. The furnaces must be well sealed against air infiltration, the interior linings must be highly corrosion resistant, and additional controls and instrumentation are required. Moreover, to be economically viable these systems must be able to recover and use the energy content of the exhaust gases. Heat recovery systems add to the overall complexity and capital costs of the facility. Finally, a greater volume of residual ash and char is produced when wastes are processed by pyrolysis than by incineration.

Pyrolysis offers three distinct advantages over incineration:

1. The lower air requirements result in less exhaust gases. Exhaust gas cleaning equipment is less expensive, therefore, as it handles a considerably smaller volume of gas

2. The pyrolytic gases, oils and chars produced in the combustion process present more usable byproducts than incineration

3. Less energy is used.

Depending on the heat generated in the pyrolysis process, three distinct modes of operation result: low temperature char, high temperature char and char-burned. The char-burned mode is much like incineration in that a true ash is produced. This mode also produces the most recoverable heat. The low temperature char process only pyrolyzes the combustible material, leaving a charcoal-like residue which is high in ash content. High temperature char produces a smiliar charcoal-like material. An analysis of the various chars is presented in Table 31.

Unfortunately, pyrolysis has not been the saviour of sludge disposal that was projected by many manufacturers. Although theoretically pyrolysis offers many advantages, these systems have not been reliably demonstrated.

Sludge Characteristics and Thermal Reduction

The most important sludge characteristics for maintaining a thermal process are the heating value, moisture content and ash content of the sludge.

The heating value of various residuals collected during sewage treatment is presented in Table 32. Raw sewage solids generally contain about 10,000 Btu/lb. of volatile (combustible) solids. Greases, however, have a considerably greater heating value, generally between 16,000 and 17,000 Btu/lb. A comparison of the heat value of various sewage treatment residuals with other fuels is presented in Table 33. Representative chemical analyses of refuse and sewage sludge samples are shown in Table 34.

TABLE 31

PROXIMATE ANALYSIS OF PYROLYSIS CHAR

	Proximate Analysis of Pyrolysis Char at Indicated Temperature (°F.)				Pennsylvania Anthracite Coal
	900	1200	1500	1700	
Volatile matter, %	21.81	15.05	8.13	8.30	7.66
Fixed carbon, %	70.48	70.67	79.05	77.23	82.02
Ash, %	7.71	14.28	12.82	14.47	10.32
Btu per lb	12,120	12,280	11,540	11,400	13,880

SOURCE: Los Angeles County/Orange County Sludge Processing and Disposal, April 1977, p. 7-10

TABLE 32

HEATING VALUE OF
TYPICAL RESIDUALS COLLECTED DURING
SEWAGE TREATMENT

MATERIAL	COMBUSTIBLES (%)	BTU/LB OF COMBUSTIBLES
GREASE AND SCUM	88.5	16,750
RAW SEWAGE SOLIDS	74.0	10,285
FINE SCREENINGS	86.4	8,990
GROUND GARBAGE	84.8	8,245
DIGESTED SLUDGE	59.6	5,290
GRIT	33.2	4,000

SOURCE: Los Angeles County/Orange County Sludge Processing and Disposal, April 1977, p. 7-15

TABLE 33

COMPARATIVE HEATING VALUES OF PERTINENT FUELS

FUEL	HEATING VALUE (BTU/LB)	RATIO OF FUEL VALUES TO VALUE FOR NO. 2 OIL
NO. 2 OIL	19,600	1.00
NO. 6 OIL	17,500	0.89
NATURAL GAS	22,800	1.16
BITUMINOUS COAL	13,600	0.69
WOOD (AIR DRIED)	5,500	0.28
GREASE AND SCUM	16,700	0.85
SLUDGE (DRY VOLATILES)	10,000	0.52
DIGESTER SLUDGE	5,300	0.27
DIGESTER GAS	15,400	0.79
MUNICIPAL REFUSE (20% MOISTURE)	4,900	0.25

SOURCE: Los Angeles County/Orange County Sludge Processing and Disposal, April 1977, p. 7-17

TABLE 34

Representative Chemical Analyses (Weight %) and Heat Contents (Btu/lb) of Dry Refuse and Sewage Sludge Samples

Constituent	Refuse	Raw Sewage	Digested Sewage
Carbon	33.11	37.51	24.04
Hydrogen	4.47	5.54	3.98
Oxygen	25.36	22.56	12.03
Nitrogen	0.60	1.97	2.65
Chlorine	0.41	0.33	0.17
Sulfur	0.14	0.37	0.75
Metal	11.64	-	-
Glass, ceramics, stone	16.23	-	-
Volatiles @ 110° C	-	3.66	3.01
Ash	8.04	28.06	53.37
	100.00	100.00	100.00
Higher Heating Value	5,902	7,040	4,620

SOURCE: Los Angeles County/Orange County Sludge Processing and Disposal, April 1977, p. 7-16

Calculations can be made regarding recoverable heat and the need for auxiliary fuel during combustion based on average heat values for sewage sludges and typical operating conditions in combustion reactors. Figure 11 relates natural gas consumption to the moisture content and volatile solids fraction of the sludge. Recoverable heat from the combustion of sewage sludge is presented in Figure 12, while the amount of refuse required for combination with raw or digested sludge at various total solids levels to achieve self-sustaining combustion is shown in Figure 13. Assumptions as to the amount of heat released by the combustion of sludge solids and refuse, used in the development of Figures 12 and 13, are presented in Table 35.

It should be emphasized that Figures 11 through 13 give only approximate values since average fuel values are assumed. More importantly, average combustion processes are assumed.

Figure 14 presents a thermodynamic approach to evaluating thermal reduction systems. The values presented in the previously presented tables and figures can be used to project energy production, amount of auxiliary fuels needed, and basically to compare various thermal reduction systems.

Research information from the manufacturers of various thermal reduction systems would be invaluable in performing these analyses.

The general information in this section is presented to make the reader aware of the value of sludge as a fuel as compared to other materials and to point out the type of analyses which are performed to evaluate various combustion systems.

Advantages and Disadvantages of Thermal Reduction

Some of the advantages to using thermal reduction are:

- It provides maximum volume reduction of sludge
- It destroys or reduces many toxic sludge constitutents
- It can be used to produce energy, thereby reducing overall costs
- It does not require a large commitment of land resources.

Disadvantages of its use are:

- They are costly to build and operate
- Exhaust gases contain considerable particulates and can be odorous
- Many systems have proven unreliable in the past
- Highly skilled operators are required
- Large amounts of fuel are sometimes needed to sustain these processes.

Given both the advantages and disadvantages, heat reduction processes are only economical when large amounts of sludge are to be handled.

FIGURE 11

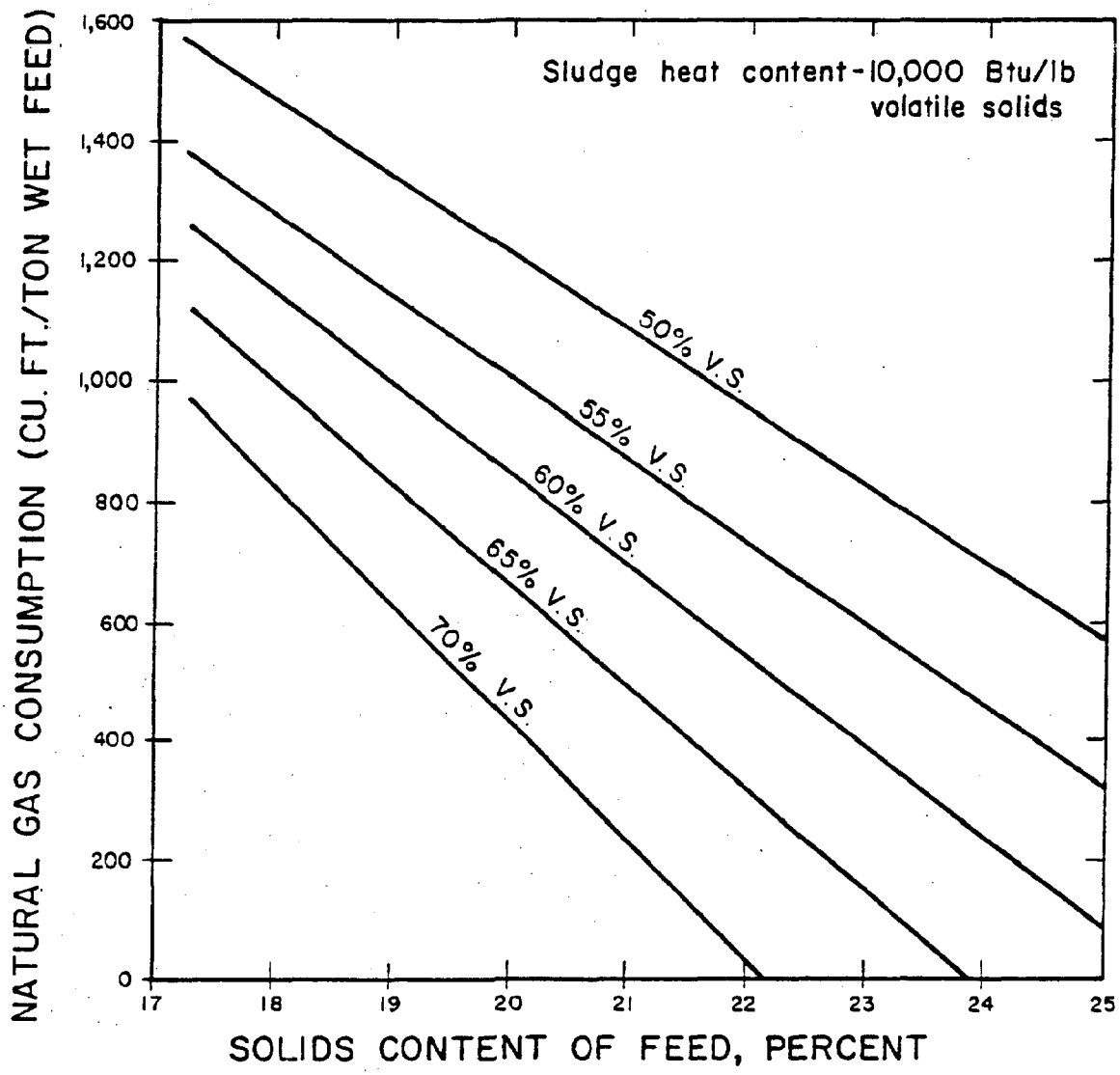

The effects of sludge moisture and volatile solids content on gas consumption

SOURCE: Los Angeles County/Orange County Sludge Processing and Disposal, April 1977, p. 7-19

FIGURE 12

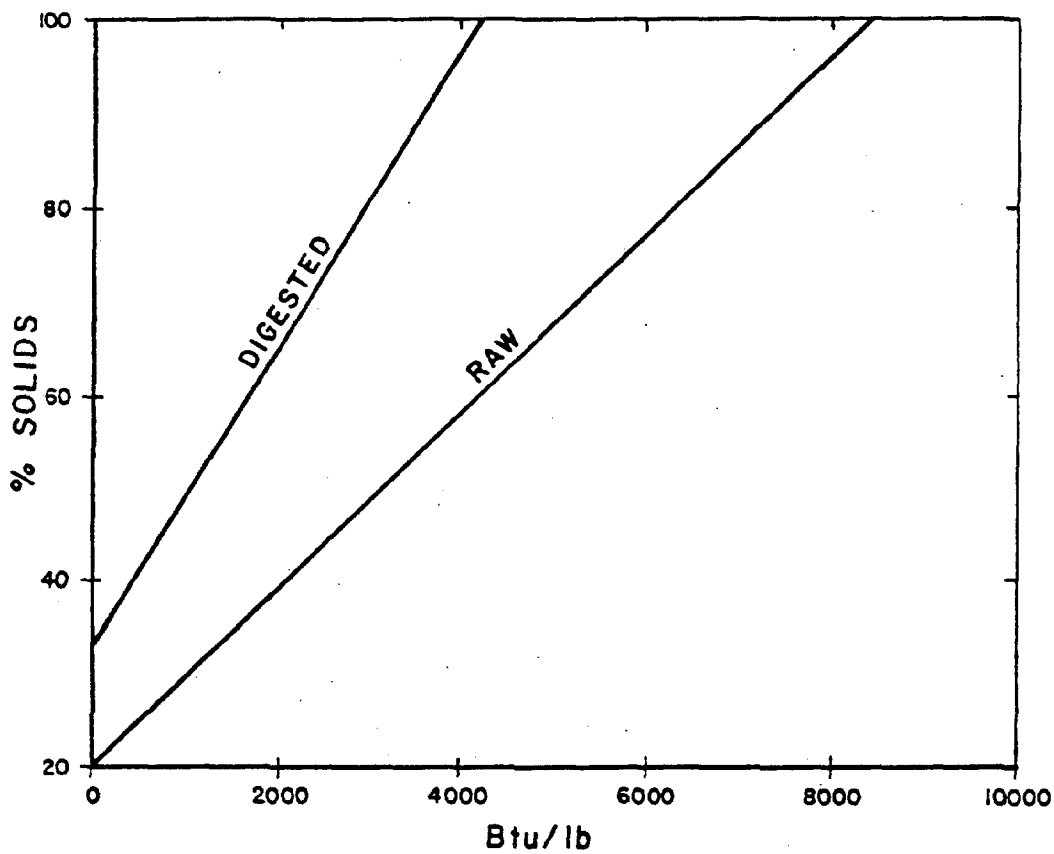

Recoverable heat from combustion of sewage sludge

SOURCE: Los Angeles County/Orange County Sludge Processing and Disposal, April 1977, p. 7-20

FIGURE 13

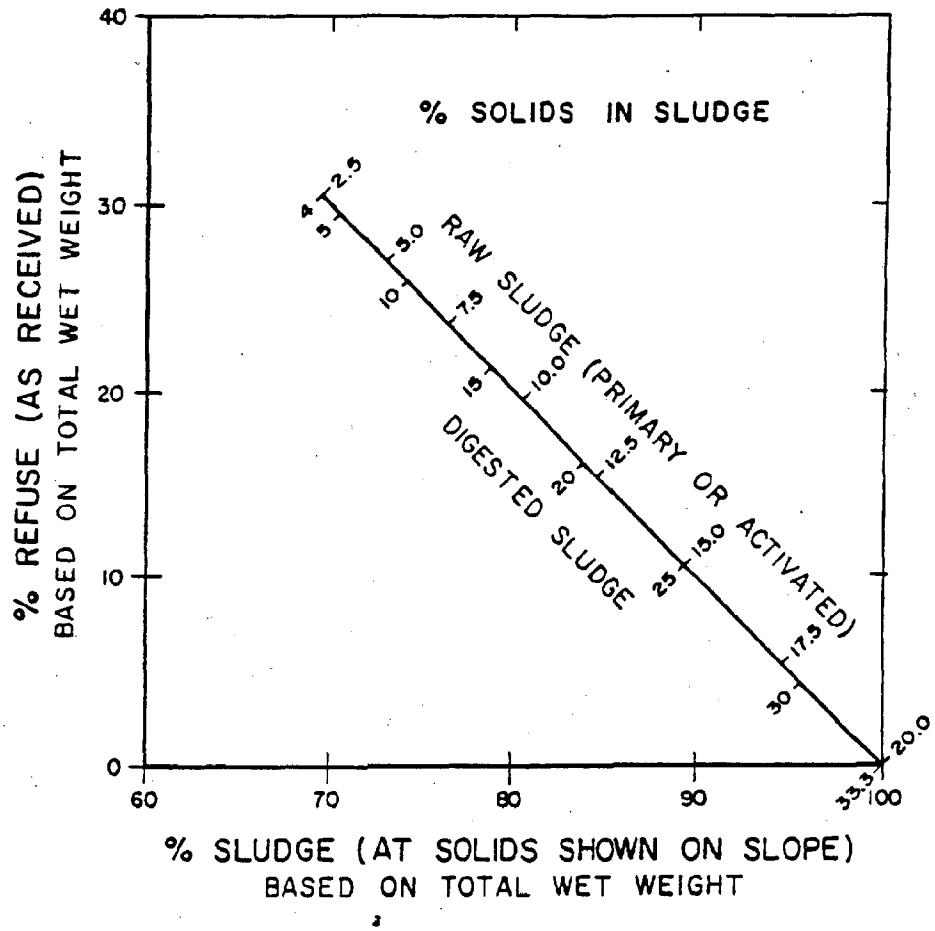

Sludge/refuse ratio required for self-sustaining combustion

SOURCE: Los Angeles County/Orange County Sludge Processing and Disposal, April 1977, p. 7-21

THERMODYNAMIC SYSTEM BOUNDARY ABOUT A TYPICAL THERMAL PROCESSING SYSTEM

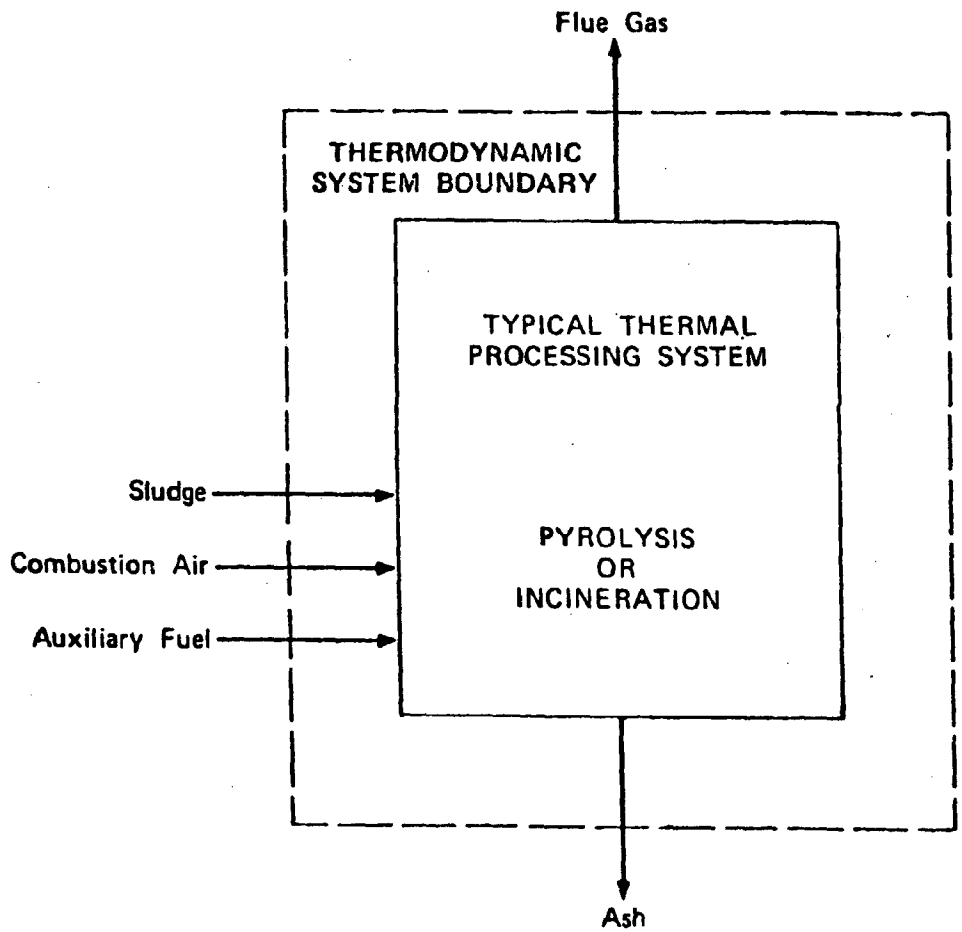

Material Entering Thermodynamic System Boundary = Material Leaving Thermodynamic System Boundary

Heat Entering Thermodynamic System Boundary = Heat Leaving Thermodynamic System Boundary

FIGURE 14

SOURCE: Los Angeles County/Orange County Sludge Processing and Disposal, April 1977

TABLE 35

HEAT RELEASED ON COMBUSTION OF REFUSE AND SEWAGE SLUDGE (HIGHER HEATING VALUE, BTU/LB)

MATERIAL	RANGE	AVERAGE VALUE USED
Raw sludge (primary or activated dry solids)	6500-9500	8400
Digested sludge (from anaerobic treatment, dry solids)	2500-5500	4200
Chemical sludge (e.g. lime from tertiary treatment	nil	nil
Refuse (as received, 25% average moisture content)	3700-4700	4200
Refuse (air-classified combustibles)	5000-6000	5500
Evaporation of 1 lb. of water in a furnace setting.	-(1800-2500)	-2100

SOURCE: Los Angeles County/Orange County Sludge Processing and Disposal, April 1977, p. 7-18

Heat Treatment

Sludge is heat dried when a thermal reduction process is to be used following the drying step or if a fertilizer or soil conditioner product is desired. Each of the processes described here will produce a dried sludge which is nearly pathogen free, contains only five to ten percent moisture, and is reduced in volume by approximately 25 percent. If the production of a commercial grade fertilizer is desired, it may be necessary to include a pelletizing or granulating step due to the production of dust and fine sludge particles. In addition, exhaust gases from the heat drying process must be deodorized and the suspended particles removed by scrubbing.

Heat drying is expensive as far as both capital and operation and maintenance costs are concerned. The drying units use a considerable amount of fuel and require experienced and knowledgeable operators.

Because fuel costs are so high with this process, it is always cost effective to remove as much water from the sludge as possible prior to the heat drying step. Theoretically, it takes approximately 1,000 BTUs to convert one pound of water to a vapor at atmospheric pressure. As is illustrated in Figure 15, the amount of water in a given sludge varies considerably in the five to 25 percent solids range.

During heat treatment, sludge is heated to temperatures which are too low to destroy organics but high enough to evaporate water. No combustion takes place during heat treatment. Sludge goes through three stages during heat drying: initial drying, steady state drying and final drying. During the initial stage, little drying occurs, as the sludge is just coming up to process temperature. At the steady state stage, water is evaporated at a rapid rate as the tempeature reaches about 320°C. As quickly as water travels to the sludge particle surface, which at this point is saturated, it is lost in the moist air. In the final drying stages, sludge concentrations approach 95 percent. At this point, the sludge particles are not saturated and little additional drying takes place as most of the water has been removed.

A number of methods are used to dry dewatered sludge: flash dryers, spray dryers, rotary dryers, indirect heat dryers, toroidal dryers, oil immersion dehydration and solvent extraction.

Flash Dryers

Flash drying blends dewatered sludge with hot dried sludge, then mixes the blended sludge with hot furnace gases. The mixture is introduced into a mechanically agitated cage mill where drying occurs in a matter of seconds. The hot gases, propelled at velocities up to 100 feet/second, convey the solids through the system. Dried sludge is then separated from the hot gases in a cyclone (see Figure 16). Exhaust gases from the cyclone must be deodorized, then scrubbed. This creates a liquid sidestream which must be treated.

FIGURE 15

WATER CONTENT VS. PERCENT SOLIDS

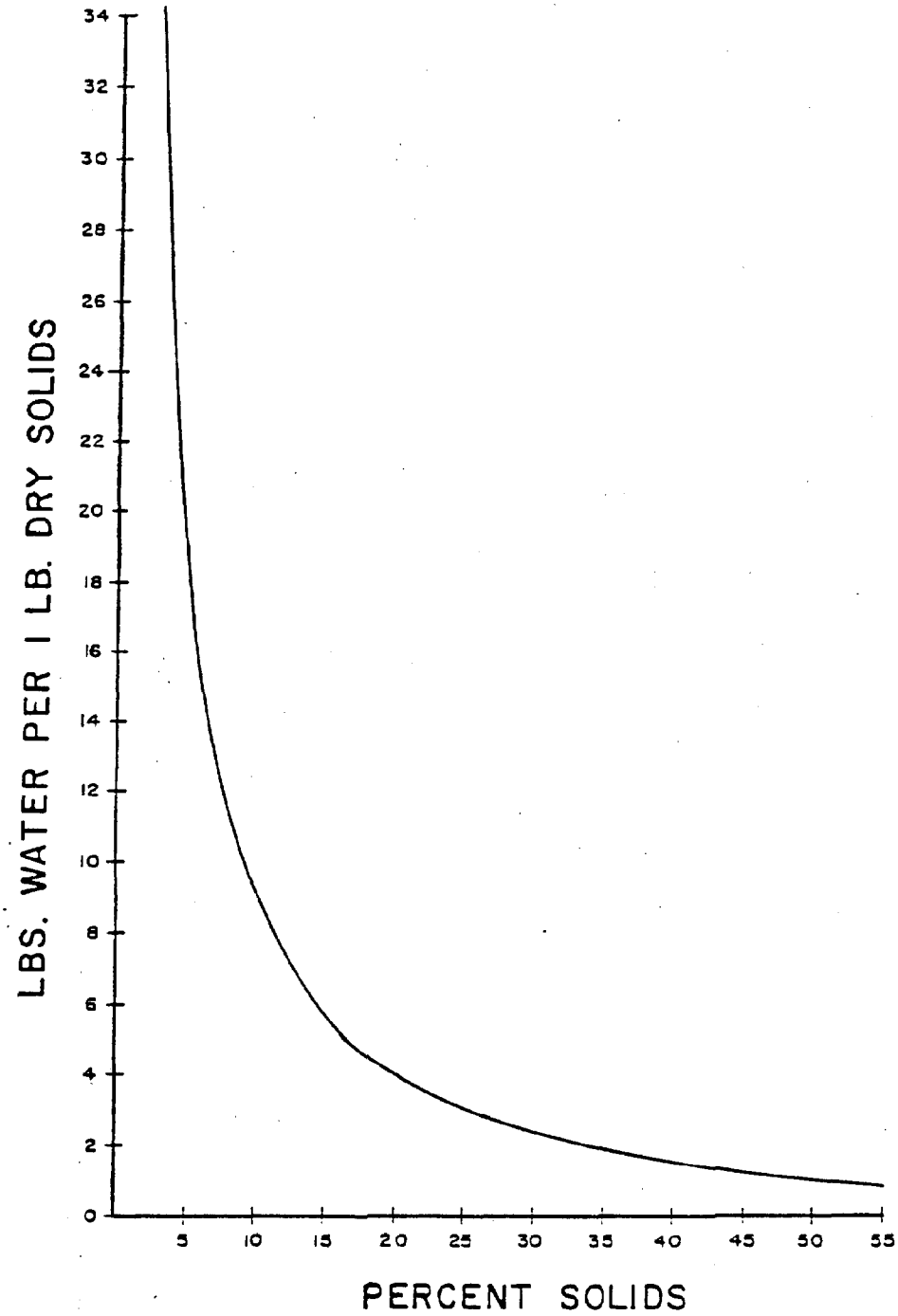

Pounds of water to be evaporated for each pound of dry solids as a function of the percent solids in the sludge.

SOURCE: Los Angeles County/Orange CountySludge Processing and Disposal, April 1977, p. 6-16

FIGURE 16

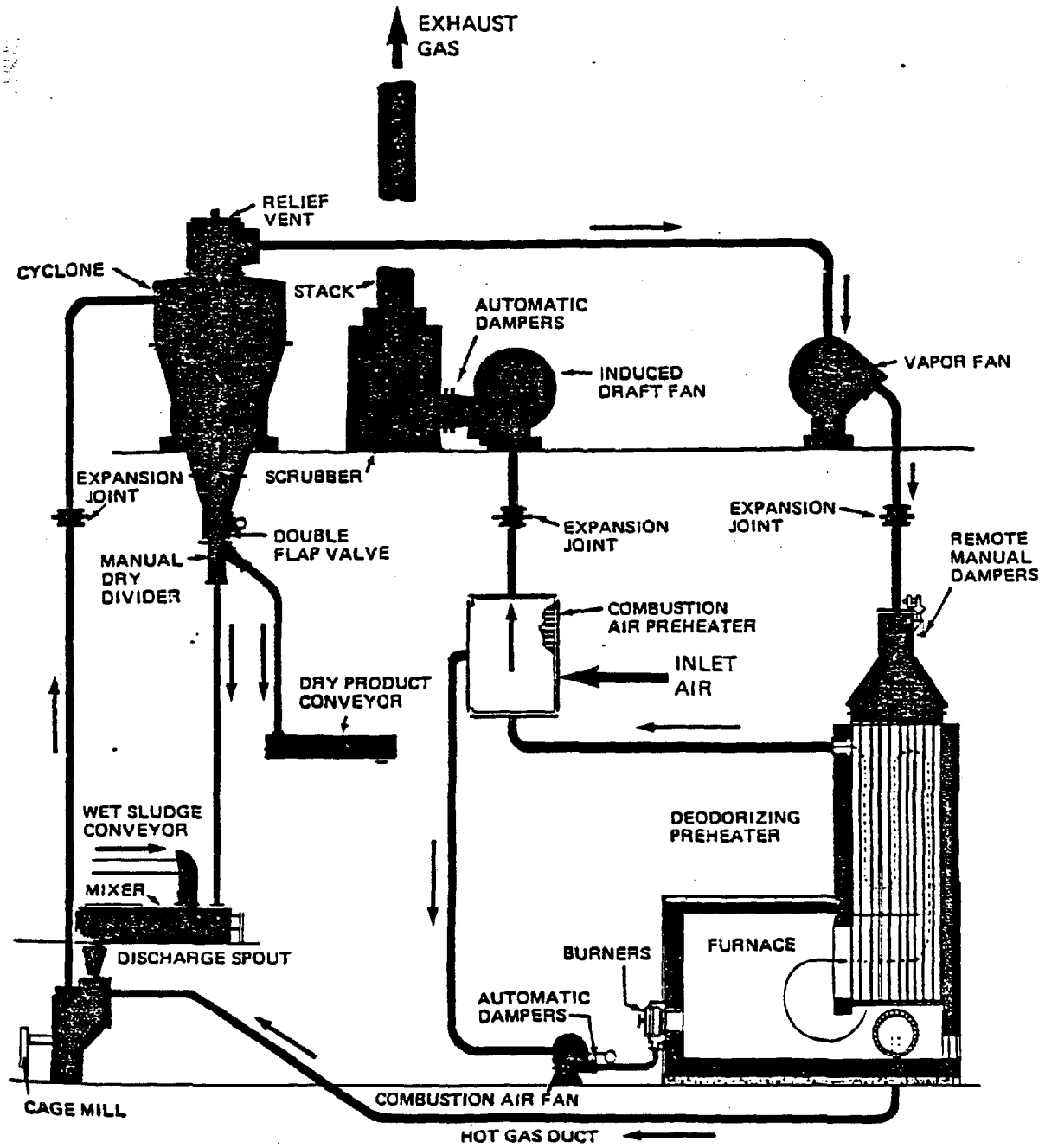

FLASH DRYER SYSTEM (COURTESY OF C.E. RAYMOND)

SOURCE: Los Angeles County/Orange County Sludge Processing and Disposal, April 1977, p. 6-4

Spray Dryers

Spray dryers are similar to flash dryers in that drying is rapid. Liquid sludge is atomized and sprayed into the top of a vertical tower. The tower is filled with hot gases and the sludge dries almost instantaneously. The sludge/gas mixture is then separated in a cyclone separator.

Rotary Dryers

A rotary dryer consists of a horizontal revolving cyclinder into which sludge is fed. Hot gases flow through the drum or cylinder at a velocity of approximately four to 12 feet/second. The sludge is moved by flights projecting from the interior walls of the drum through the drum, and discharged into a cyclone for separation. Sludge is retained in the drum for 30 to 60 minutes before being discharged. As with the flash dryer, incoming sludge is mixed with some dried sludge to ease handling of the inlet sludge. A schematic of the rotary process is shown in Figure 17, along with some common options for deodorizing and scrubbing the gas exhaust stream.

Indirect Heat Dryers

As is implied by the name, in this process the sludge to be heat dried does not actually come into contact with the hot gases. Indirect heat dryers are normally of a rotary type and can be operated in a batch or continuous mode. Figure 18 illustrates a typical indirect heat dryer. Sludge is fed into one end of the unit and is pulled through it by interior screw-type flights. Hot gases are passed through the jacketed exterior of the dryer, transferring their heat to the sludge. Water vapor driven from the sludge is collected, condensed and then directed to one of the deodorizing schemes outlined in Figure 19.

Toroidal Dryer

The toroidal dryer uses the jet mill principle, has no moving parts and dries and classifies solids simultaneously. A schematic of the process is outlined in Figure 20. As in most dryers, inlet sludge is blended with heat treated sludge and is fed into a doughnut-shaped reactor vessel, where it comes into contact with heated, fan-blown air. At the vessel outlet, fine, dried particles exit with the hot, moist air and are discharged to a cyclone. Wet, undried sludge remains inside the reactor until finally dried to a point where it can exit to the cyclone. Exhaust gases must be deodorized and scrubbed.

SCHEMATIC OF ROTARY DRIER

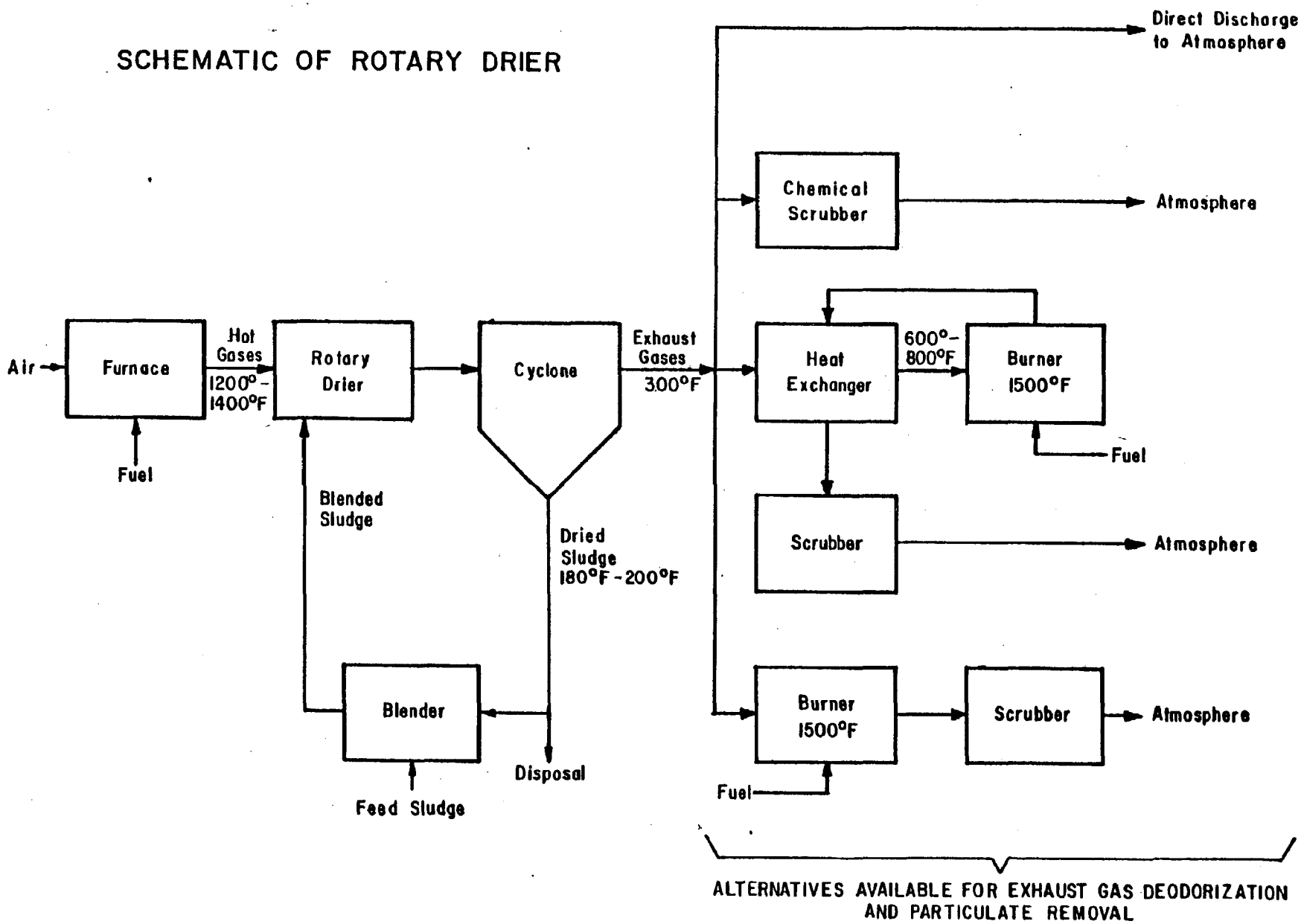

SOURCE: Los Angeles County/Orange County Sludge Processing and Disposal, April 1977, p. 6-3

FIGURE 17

FIGURE 18

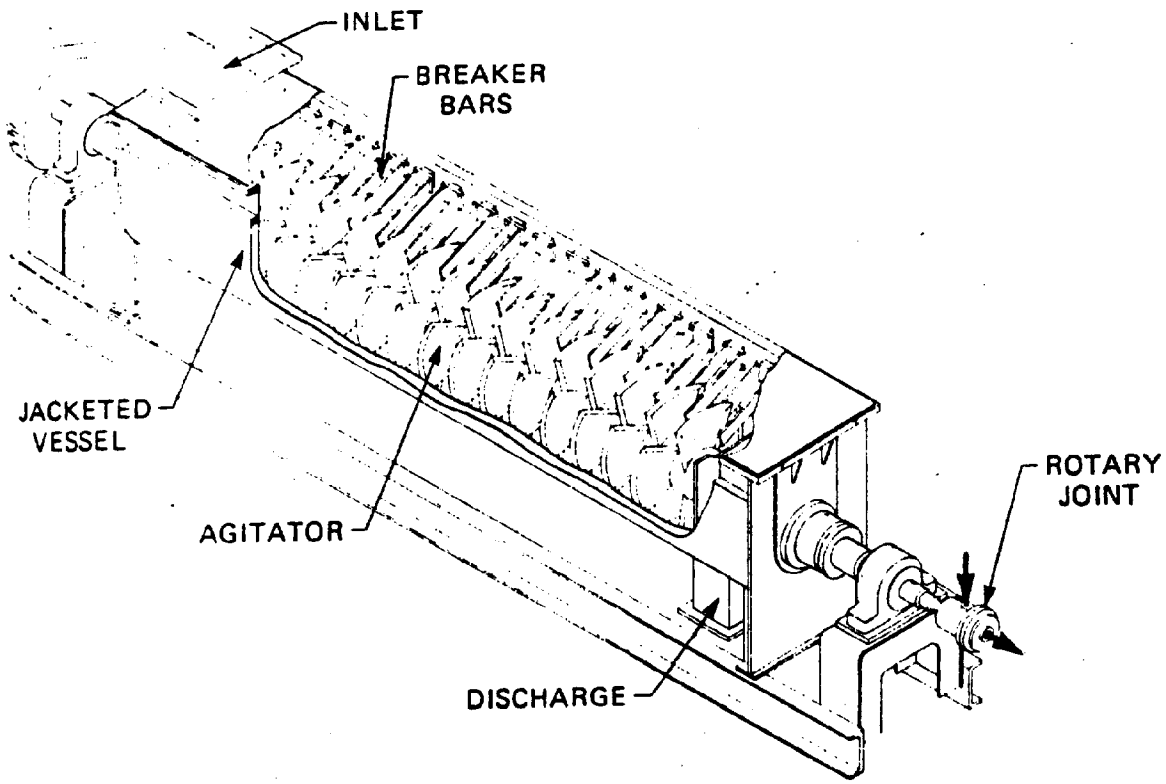

JACKETED HOLLOW-FLIGHT INDIRECT DRYER

SOURCE: EPA, Process Design Manual Sludge Treatment and Disposal, September, 1979, p. 10-23

SCHEMATIC OF ROTARY DRIER

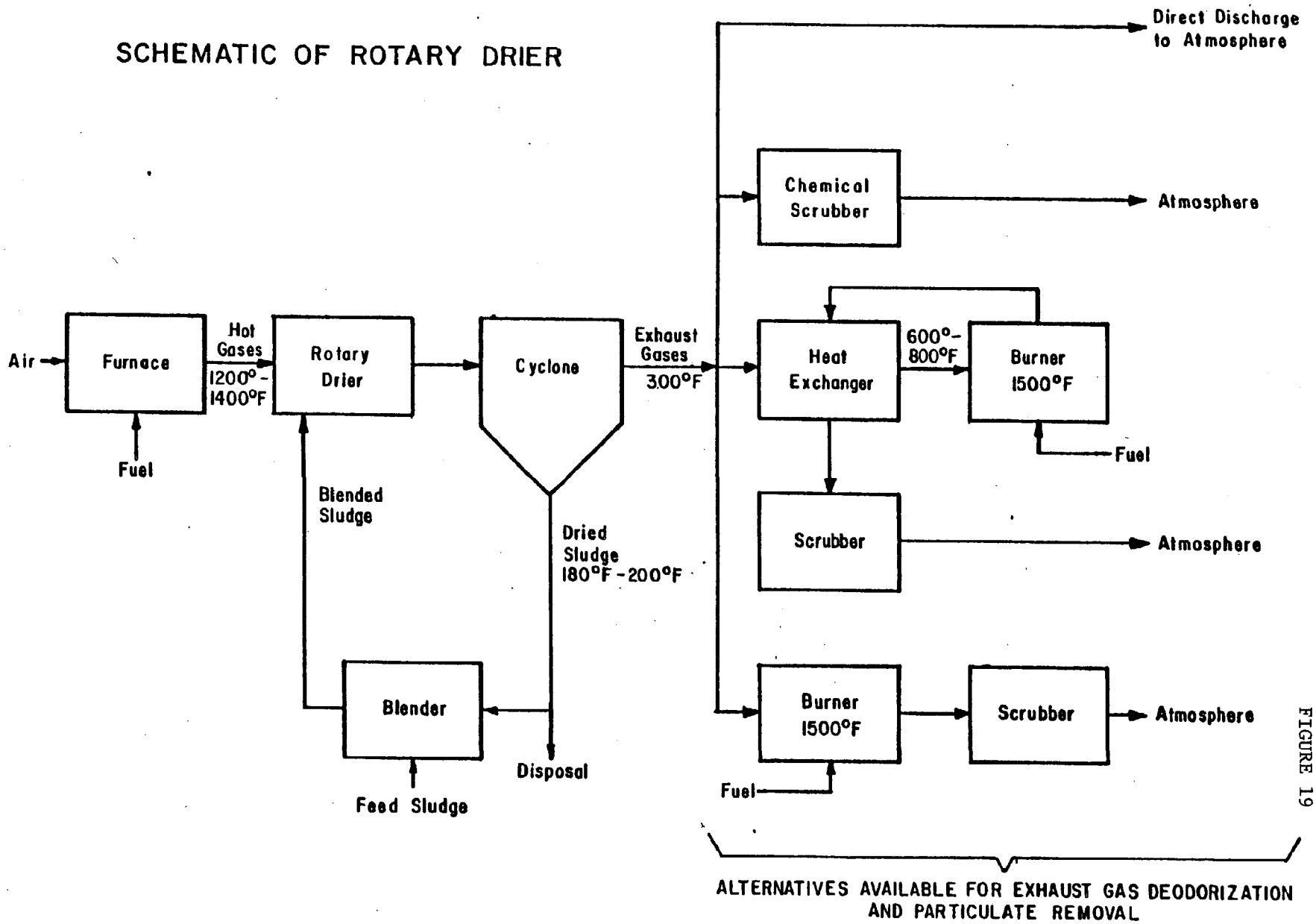

SOURCE: Los Angeles County/Orange County Sludge Processing and Disposal, April 1977, p. 6-3

FIGURE 19

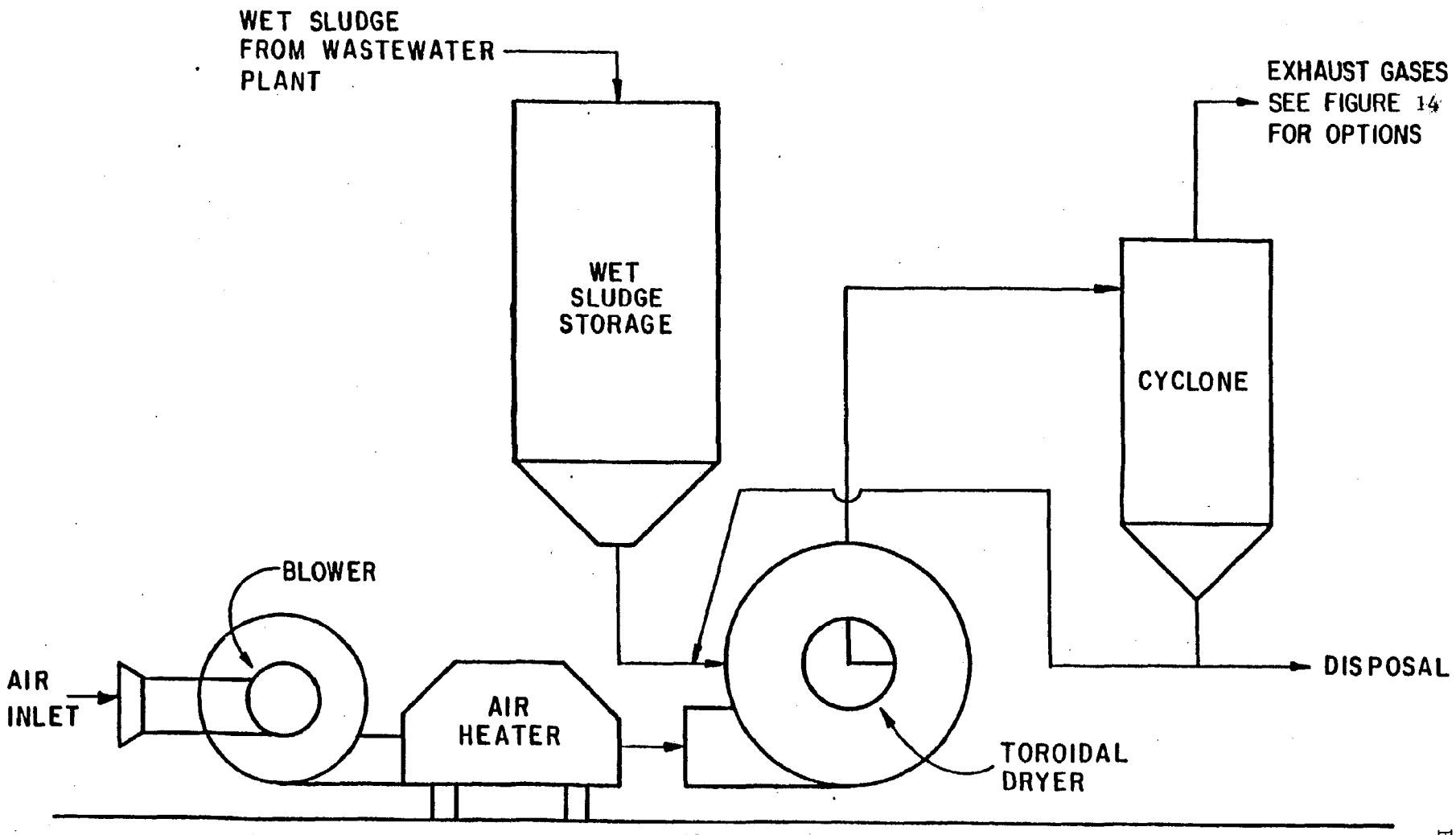

SLUDGE DRYING SYSTEM USING THE JET MILL PRINCIPLE - TOROIDAL DRYER

SOURCE: Los Angeles County/Orange County Sludge Processing and Disposal, April 1977, p. 6-3

FIGURE 20

Oil Immersion (Carver-Greenfield Process)

In the Carver-Greenfield system, water is extracted from sludge by evaporation using a multi-effect evaporator. A system flow diagram of the process is shown in Figure 21. Sludge to be processed is first thickened or dewatered as much as possible and is then mixed with an oil in a fluidizing tank at a ratio of one part dry solids to five to 10 parts oil. The use of oil improves heat transfer and helps prevent scaling on heat transfer surfaces. The sludge/oil slurry is pumped to the multi-effect evaporator where water is vaporized. Steam provides the heat necessary for the evaporation. The remaining water-free solids/oil mixture is normally centrifuged to separate the oil and solids. The oil is recycled and reused, while the dried sludge is discharged for further processing or disposal.

The Carver-Greenfield system uses the falling film evaporation process. Water to be evaporated is removed from the sludge as the oil sludge mixture rolls down the evaporator tubes (see Figure 22). When the hot oil sludge slurry enters the vapor chamber, the vapor rises and is piped into the previous stage evaporator to be used as the heat source, while the oil sludge mixture falls to the bottom of the chamber and is pumped to the following stage evaporator. This multi-effect evaporation saves steam over single-effect operations through the reuse of heat. A vacuum is applied to each effect to reduce the temperature required to vaporize the water in the sludge.

Most proposals on treating municipal sludge with the Carver-Greenfield process include an incinerator or pyrolysis reactor to recover the heat value of the dried product. Theoretically, this is an attractive combination of processes, since water can be evaporated prior to combustion or gasification. Fuel gases produced during pyrolysis, or waste heat from an incinerator can then be used to supply the energy requirements of the Carver-Greenfield process. The process also can be used to produce a fertilizer.

Odors, sidestreams containing ammonia and dissolved organics, and the requirement of large quantities of make-up oil represent possible problems associated with the Carver-Greenfield process.

In summary, the Carver-Greenfield process offers considerable potential for improved thermal efficiency of subsequent combustion processes. This is because water is evaporated with multiple-effect efficiency as opposed to single-effect evaporation which normally occurs in other heat drying processes. The potential exists for making the sludge processing train energy self-sufficient and, perhaps, energy producing. However, this is accomplished with a large capital investment. While the Carver-Greenfield process is used in many industrial applications, it has not been adequately demonstrated for the treatment of municipal sludges.

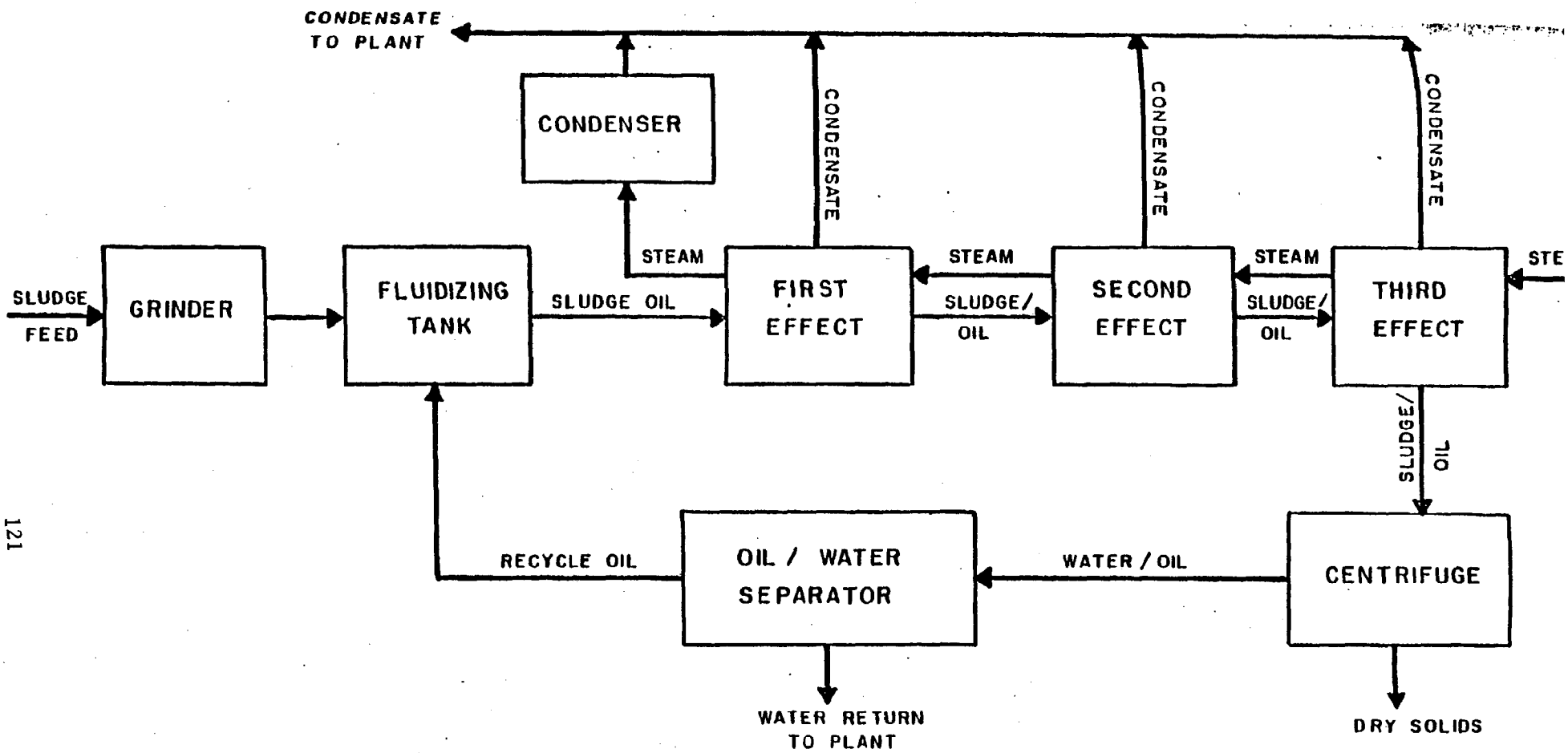

FIGURE 21

CARVER-GREENFIELD MULTI-EFFECT EVAPORATION PROCESS

SOURCE: Manufacturer's Data

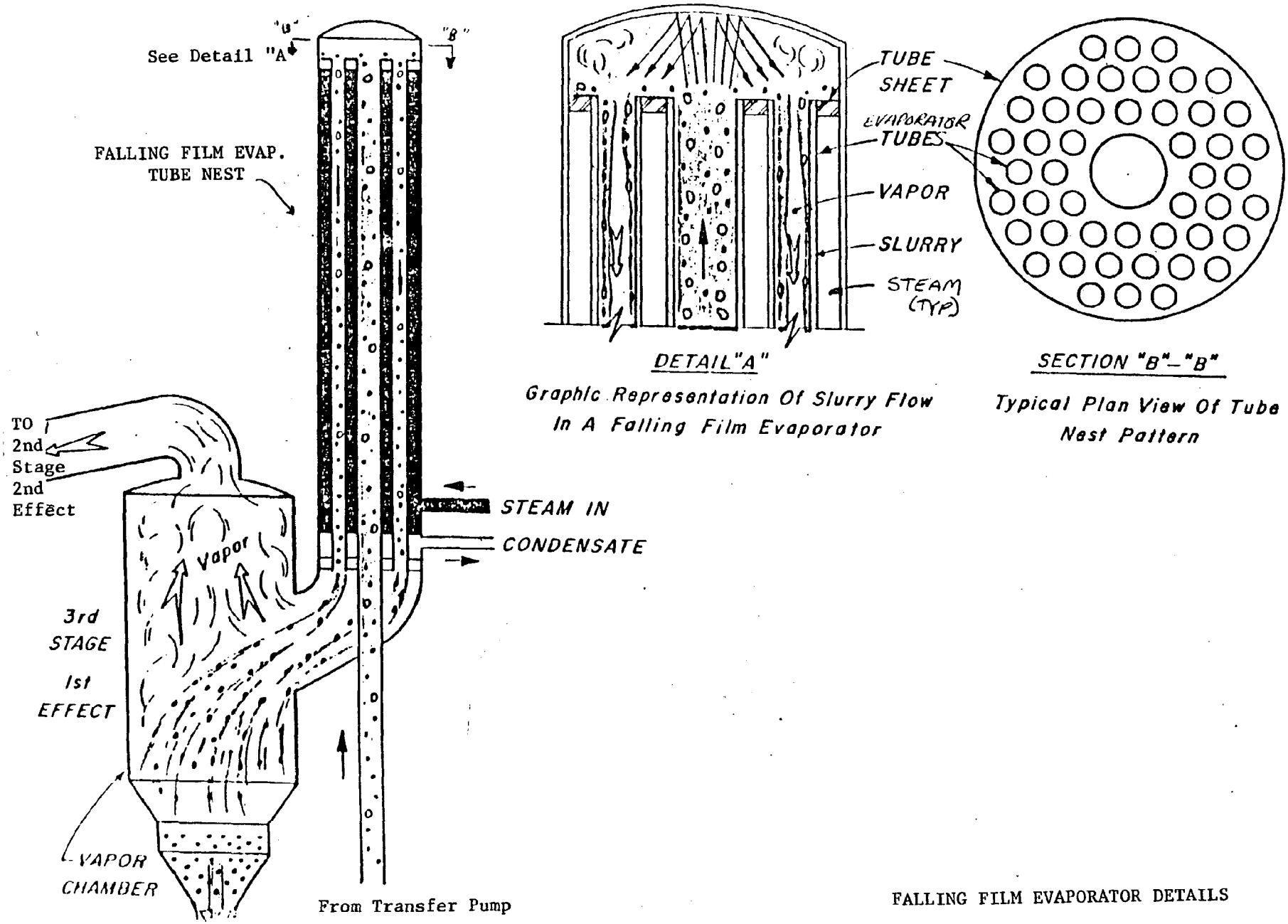

FIGURE 22

FALLING FILM EVAPORATOR DETAILS

SOURCE: Los Angeles County/Orange County Sludge Processing and Disposal, April 1977, p. 6-35

Solvent Extraction Dehydration (B.E.S.T. System)

The Basic Extractive Sludge Treatment (B.E.S.T.) process uses an aliphatic amine solvent to separate sludge solids from water. The process functions based on the temperature-sensitive properties of the solvent. Below 65°F., the solvent and water form a single-phase, homogeneous solution. Above 65°F., the solvent and water mixture separates into two distinct layers, the bottom one being almost entirely water.

On entering the system, the inlet sludge is cooled to about 50°F., before joining the solvent which has also been cooled to about 20°F.(see Figure 23). Due to the heat of reaction, the temperature of the mixture increases to about 60°F., and is subsequently cooled to about 50°F. in a third heat exchanger to ensure that the temperature of the mixture is below the critical point of 65°F. The sludge/solvent mixture then enters a centrifuge where the solids are removed and sent to a dryer.

The solvent remaining with the solids is driven off in the dryer, condensed, and returned to the system. The water solvent fraction or centrate is heated to 120°F., and sent to a decanter where the solvent and water separate. The solvent is returned to the system and the water is fed to a steam stripping distillation column to recover and recycle the remaining fraction of solvent. Any oils or fats extracted from the sludge remain in the solvent and are recovered in a solvent still. Oils and fats are left to be collected and disposed of separately.

The B.E.S.T. process is still experimental. Foam, odors, excessive centrifuge capacity, and heat exchanger plugging are a few problems which have yet to be resolved. The advantages of the B.E.S.T. process are lower energy costs, smaller amounts of exhaust gas and a fairly clean, low-volume sidestream.

B.E.S.T. PROCESS FLOW SCHEMATIC

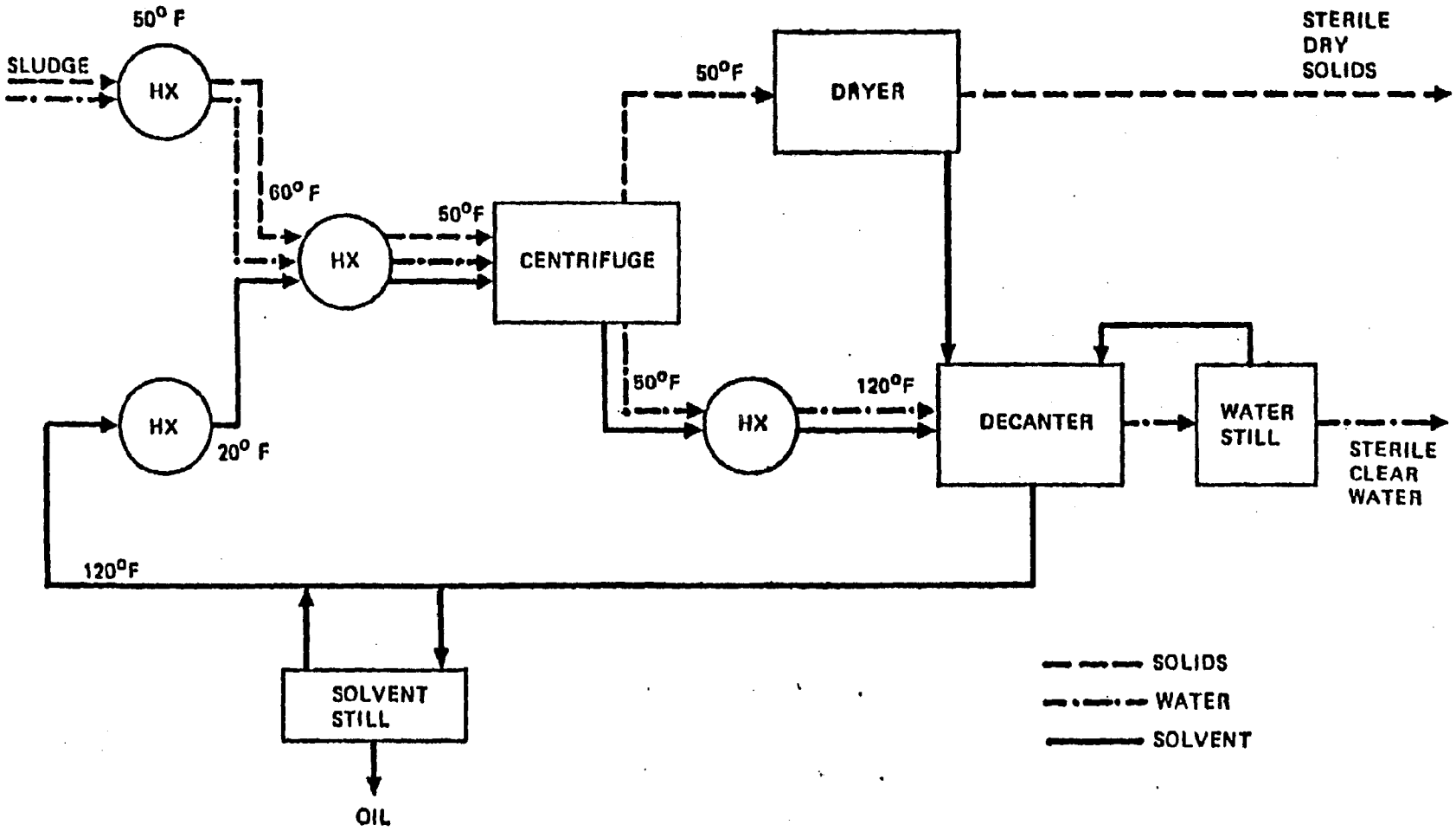

SOURCE: EPA, Process Design Manual Sludge Treatment and Disposal, September, 1979, p. 10-29

FIGURE 23

THERMAL REDUCTION CASE STUDY
CARVER-GREENFIELD PROCESS

LOCATION:	(Current and under construction): Industrial: Coors Brewery, Colorado, Hershey Chocolate Company, Pennslyvania Municipal: Fukuchiyama, Japan City of Los Angeles, Step 1, 2: 657 tons/day (Spring '86); Trenton, New Jersey (under design)
OPERATOR:	Foster-Wheeler, Inc. with DeHydrotech Corporation
PROCESS TYPE:	Dehydration of previously thickened or dewatered industrial and municipal sludges via multiple-effect evaporation in a light oil medium.
CAPACITY:	From 40 tons per day to 400 tons per day. Can be combined with energy recovery in steam and electric generating plant. Below 30 tons per day, must be custom designed without energy recovery.
SITE AREA:	For Carver-Greenfield alone, an 82 tons per day plant uses approximately 6,200 square feet
DRIED SLUDGE CAKE:	Up to 99 percent solids. Can be re-watered to desired moisture content, or pelletized to enhance combustion characteristics.

DISCUSSION

The Carver-Greenfield process has been in use in the food and chemical industry over the last several decades, principally for the dehydration and disposal of unusual wastes that resist conventional treatment, such as from breweries and paper mills.

Although as yet largely undemonstrated for municipal wastes, except for a night soil* plant in Japan, a large, integrated energy recovery facility is about to undergo startup for the City of Los Angeles. Other proposals are being considered for Trenton and other New Jersey localities, and by the City of Syracuse, New York.

* Night soil is excrement removed from privy vaults and used for fertilizer.

The major advantage claimed for the process is energy efficiency, based on the principle of multiple-effect evaporation. Through a series of recondensations an equivalent of three or more pounds of vapor is evaporated for each pound of input steam into the process. The light oil carrier provides a secondary source of energy. The light oil dissolves scum and residual oils in the sludge and makes them available for combustion to support the process and make it practically self-sustaining. The product can be brought to near 100 percent dryness if desired, and is essentially odor-free and innocuous except for inherent heavy metal content.

Additionally, the low moisture content of the dehydrated sludge makes all its heating value available for combustion. This allows any proportional mixture of dehydrated sludge and municipal solid waste. Energy recovered from the combustion process can be sold to a local utility, reducing the cost to dispose of the sludge.

The complexity of the Carver-Greenfield plant is a disadvantage. It requires more costly maintenance and more advanced operating technology than a typical sewage plant. There is also an increased chance of operating failure. The condensate from the various evaporator stages makes up a sidestream that must be sent back to the sewage treatment plant for treatment, and may consititute a significant biochemical oxygen demand (BOD) load.

The effect of energy recovery on operating cost is illustrated by Table 36. This shows a breakdown of the cost elements before and after energy recovery in two plants in New Jersey for which firm quotations are available from the manufacturer, and a third hypothetical plant using fluidized bed combution, based on a US Department of Energy-sponsored study.

Note that the cost per dry ton for disposing of sludge can be decreased by 27 to 51 percent, if energy recovery is employed even at the $.06 per KWH used for this analysis. Below 30 tons per day this option is not effective. The final costs are quite sensitive to the degree of dryness of the input sludge, as less water will then have to be removed by the Carver-Greenfield process. Even if energy is not recovered the cost per ton is quite competitive with other current technologies.

TABLE 36

CARVER-GREENFIELD DEHYDRATION WITH ENERGY RECOVERY

COST ITEM	60 TONS/DAY[a] (press to 35 %) $1000	($/dt)[c]	82 TONS/DAY[b] (centrifuge to 15%) $1000	($/dt)[d]	50 TONS/DAY[a] (centrifuge to 12%) $1000	($/dt)[c]
Capital						
Dewatering	788	(5.98)	2,995	(10.05)	1,134	(3.43)
Carver-Greenfield	5,250	(39.81)	8,023	(26.99)	11,736	(35.58)
Energy Recovery	3,465	(26.26)	8,132	(27.38)	9,450	(28.66)
Total Capital	$9,503		19,150		$22,320	
Annual Capital Cost	1,578	(72.05)	1,928	(64.42)	3,705	(67.67)
Operating & Maintenance:						
Dewatering	804	(36.71)	---	---	886	(16.18)
Carver-Greenfield	544	(24.84)	---	---	720	(13.15)
Energy Recovery	496	(22.65)			720	(13.15)
Total O&M	1,844	(84.20)	1,836	(61.34)	2,326	(42.48)
Total Annual Capital & Operating Cost:	3,422	(156.25)	3,764	(125.76)	6,031	(110.15)
Credit for Energy Recovered:						
Steam @ $5.50/M lbs	788	(35.52)	---	---	---	---
Elec. @$ .06/KWH	137	(6.26)	1,932	(64.55)	2,286	(41.75)
Total Energy Credit	915	(41.78)	1,932	(64.55)	2,286	(41.75)
Net Cost:	2,507	(114.47)	1,832	(61.21)	3,745	(68.40)
Decrease in cost from energy recycing		(26.7)		(51.3)		(37.9)

NOTES:

a: from communication, DeHydrotech Corp.

b: from Sludge-to-Energy Feasibility Study, NYC Department of Environmental Protection, (funded by US Department of Energy), in publication, 1986.

c: based on Annual Capital Charge of 16.6 percent (own and operate lease by manufacturer)

d: based on Annual Capital Charge of 7 percent municipal bonds (owned by any municipality)

THERMAL REDUCTION INCINERATION CASE STUDY

LOCATION:	Glen Cove, New York
OPERATOR:	mmb Glen Cove Corporation (subsidiary of Montenay International Corp.)
PROCESS TYPE:	Mass burn refractory furnace Co-disposal of municipal solid waste (MSW) and municipal sewage sludge
CAPACITY:	250 tons per day (TPD) (225 TPD MSW, 25 TPD sludge, in two parallel process trains)
SITE AREA:	Two acres
DRIED SLUDGE CAKE:	20 percent solids
SLUDGE DEWATERING:	Centrifuge (2 units)
CAPITAL COST:	$24 million

DISCUSSION

Technical representatives from Orange and Rockland counties and EFC staff toured this facility on January 28, 1986. Both the resource recovery facility and the sewage treatment plant are operated by mmb Corporation under a contract with the City of Glen Cove. The operation appeared to be well run and efficient.

Unsorted MSW is received at the facility, and transported by compactors and other vehicles. Large, non-combustibles (stoves, refrigerators, etc.) are separated on the tipping floor and combustible refuse is dropped into a receiving bin. The MSW is then fed as needed into a charging hopper for the stoker by a radio controlled gantry crane. Sludge is simply dropped onto the MSW in the charging hopper by an oscillating nozzle. The rate of sludge feed is controlled by the speed of a progressive cavity cake pump fed from a dewatered sludge storage hopper. Sludge feed rate is a function of furnace temperature and sludge solids concentration.

The MSW/sludge mixture is then conveyed into the furnace by the stoker. Heat generated in the combustion process at 1600°F is used to make steam to power a five stage, 3,600 Hp turbine which drives a 2,500 KW electrical alternator. The power generated is used to supply the resource recovery facility as well as provide electric power for the STP. Approximately 50 percent of the electricity generated is sold to the Long Island Lighting Company at approximately $.07/kilowatthour.

The facility generates approxmately 44 tons of ash when operating at design capacity. Sixty to 70 percent of the ferrous metals are recovered by a magnetic drum separator. The ash is being landfilled. A future plan is to further refine the ash residue for use as roadbed material, concrete block, and similar uses.

The only significant problem at the facility appeared to be the ability of the centrifuges to deliver a consistent 20 percent sludge cake. Currently, the sludge cake averages 15 to 20 percent . The use of a belt press to dewater sludge is being considered to increase sludge solids concentration. It is believed that, with proper operation, a belt press may achieve 25 to 30 percent solids, resulting in considerably higher heat values (Btu/lb) per ton of sludge burned.

An outstanding feature of the facility appeared to be the simplicity in the MSW/sludge mixing process. Such a simple system could easily lend itself to being retrofitted for existing and planned resource recovery facilities.

This facility qualified as "innovative technology", making it eligible to receive 92.5 percent of its funding from federal and state grant programs. With this as a precendent, similar funding levels may be available for regional projects.

Summary

Thermal reduction processes have been used frequently in the sludge disposal field. Incineration represents the current, established technology which results in reliable sludge disposal systems. Pyrolysis and starved air combustion systems represent an attempt to make the incineration process more efficient. To date, full-scale pyrolysis of sludge has not been as reliable as incineration systems. It does, however, offer several advantages over incineration which may result eventually in continued research and testing to produce a more reliable and efficient pyrolysis system.

CONSIDERATIONS COMMON TO TECHNICAL ALTERNATIVES

Introduction

Thre are several issues common to the consideration of any of the technologies proposed in this report: dewatering sludge, transporting the sludge and providing for other wastestreams as a result of sludge management processes. This section describes each issue. Various types of sludge dewatering equipment are presented as well as recommendations for dewatering in connection with all technical alternatives. Some general comments about transporting sludge are provided to give the reader a sense of the items to be considered.

Sludge Dewatering

Sludge dewatering is often the primary step in sludge treatment and disposal. It is used to decrease the volume of sludge requiring disposal by removing as much water as possible. Land-based methods for sludge dewatering (drying beds and lagoons) were commonly used in the past. However, for large volumes of sludge such methods require large land areas and are extremely labor intensive. Additionally, most drying methods employed to handle large volumes of sludge are mechanical. Three methods which have proven to be both efficient and economical are outlined here: centrifuge, belt filer press, and plate and frame filter press. Vacuum filters and drying beds are briefly discussed as these methods are used presently in the region. However, their use in a regional project would not be appropriate.

Centrifugation

Centrifugation has been practiced as a sludge dewatering process since the early 1900s. As indicated by the process name, the centrifuge uses centrifugal force to accelerate the sedimentation rate of the sludge solids. There are three basic types of centrifuge used for sludge dewatering: basket, solid bowl conveyor and disc nozzle.

The **basket centrifuge** incorporates a solid bowl which rotates around a vertical axis. It operates as a batch process. Sludge and polymer are fed into the base of the rotating bowl. Sludge solids migrate to the exterior walls of the bowl, while centrate (clarified liquid) overflows an internal weir (level control device to separate liquids by density) and is discharged back to the primary or secondary portion of the plant. The process continues until the quality of the centrate deteriorates, indicating that the basket is overloaded with solids. At that point, the sludge feed to the unit closes, and a skimming cycle begins collecting the solids, still too wet to transport, and directing them to a holding tank or back to the primary or secondary treatment process. Following skimming, a knife scrapes the basket of the centrifuge dislodging the dewatered solids and allowing them to fall out of the basket bottom for conveyance to a discharge point. The cycle is now completed and sludge can once again be fed into the machine. A schematic of the basket centrifuge porcess is shown in Figure 24.

FIGURE 24

BASKET CENTRIFUGE SCHEMATIC DIAGRAM

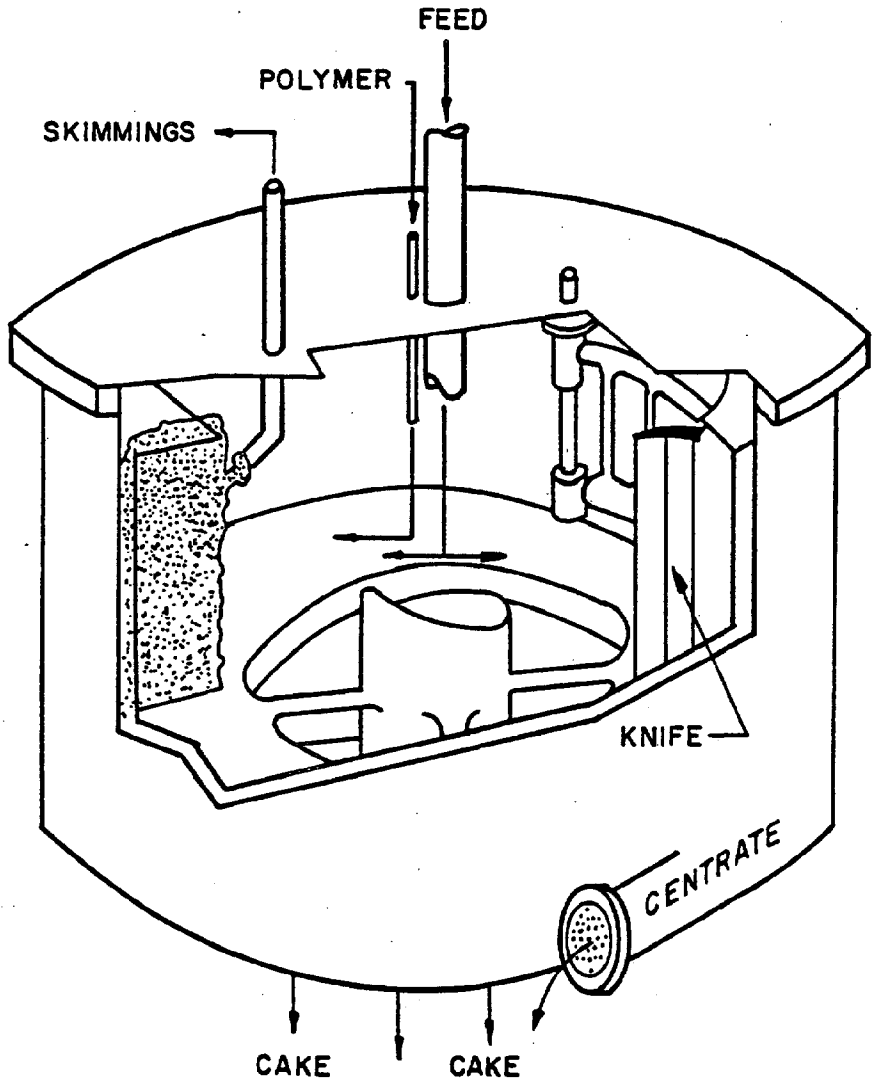

SOURCE: "Process Design for Sludge Treatment and Disposal", USEPA 625/1-79-011, Sept. 1979, p. 5-46

The **solid bowl conveyor centrifuge** process is continuous. It consists of a solid bowl and an inner screw conveyor as shown in Figure 25. Sludge and polymer are fed into the center of one end of the centrifuge. Sludge particles migrate to the outside of the rotating bowl, forming a concentrated mixture. This sludge mixture is then conveyed by the screw to one end of the unit and discharged. At the same time, the centrate moves counter-currently to the solids, discharging at the opposite end of the centrifuge.

The **disc nozzle centrifuge** is a solid bowl which rotates on a vertical axis (similar to the basket centrifuge) but operates in a continuous feed. Figure 26 illustrates the disc nozzle unit operation. Sludge is fed into the top of the centrifuge and forced through a series of closely spaced discs. Centrifugal force pushes the solids against the unit periphery where they are discharged through a series of nozzles. Centrate continues upward through the discs and is discharged over a fixed weir.

Experience with Centrifuges

Each centrifuge has been used with various types of sludge. In general, the operation is clear and simple. However, centrifuges have been plagued with problems including high power consumption, excessive wear of rotating parts, clogging (a problem limited mostly to the disc nozzle type) and plant upset caused by centrate recycling.

Recent advances in centrifuge technology have helped to mitigate some of the earlier problems. Newer dewatering installations have been lmited to the solid bowl conveyor centrifuge in hopes of providing continuous, non-clog operations. Slow speed drives, high technology wear-resistant metals and a greater understanding of polymers have essentially eliminated some of the earlier problems these machines suffered.

The centrifuge, as all dewatering processes, requires a considerable amount of ancillary equipment for operation. It is important that grit removal be incorporated prior to the centrifugation process, as grit will cause extensive wear of the centrifuge's internal parts.

The solid bowl conveyor centrifuge can produce dewatering results equal to any other dewatering unit. Solids concentrations from 12 to 60 percent are possible, based on the type of sludge dewatered and the amount of polymer used. Table 37 outlines solids concentrations which can be expected for various types of sludge. Projected solids capture for the solid bowl conveyor centrifuge can vary from 30 to 95 percent depending on the type of sludge treated and the amount of polymer used. The amount of solids capture has a considerable effect on the quality of the centrate that must be handled. Centrate strength can range from 500 to 2,000 milligrams per liter suspended solids and 100 to 1,000 milligrams per liter chemical oxygen demand (COD).

FIGURE 25

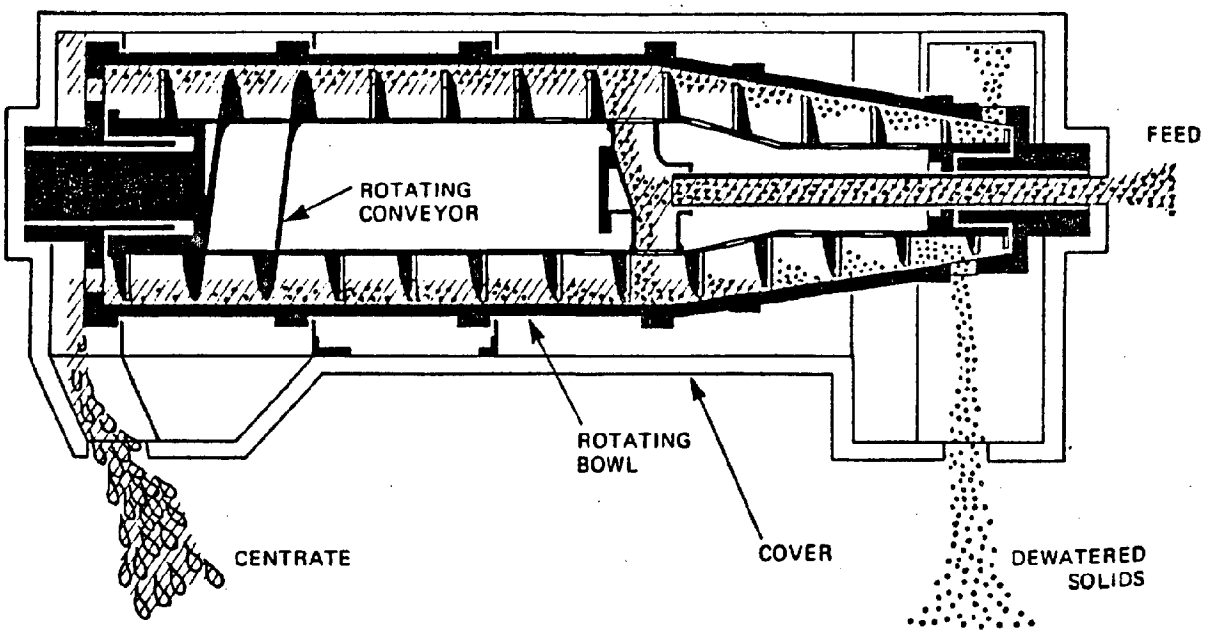

SCHEMATIC OF TYPICAL SOLID BOWL DECANTER CENTRIFUGE

SOURCE: "Process Design Manual for Sludge Treatment and Disposal", USEPA 625/1-79-001, Sept. 1979, p. 5-50

FIGURE 26

DISC TYPE CENTRIFUGE

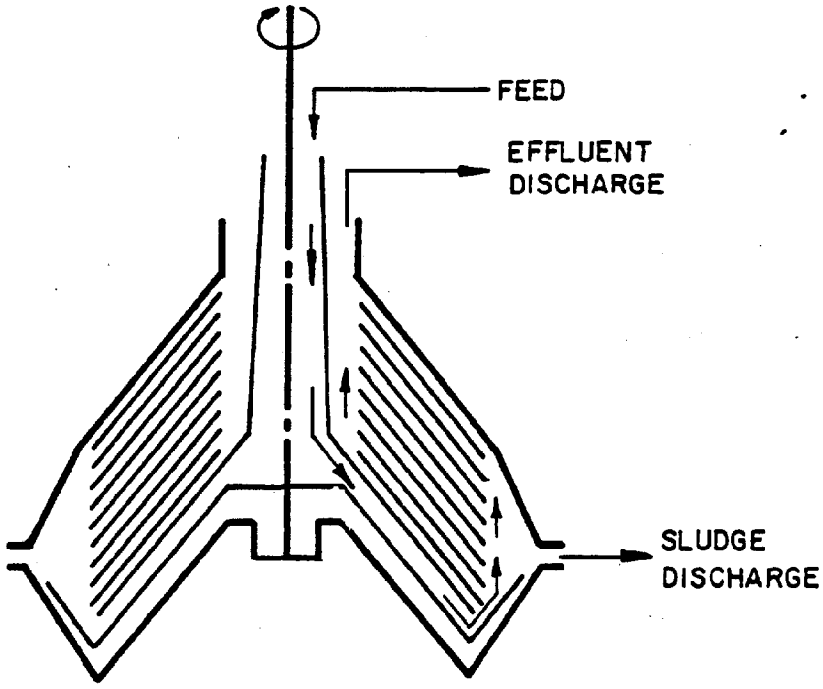

SOURCE: "Process Design for Sludge Treatment and Disposal", USEPA 625/1-79-011, Sept. 1979, p. 5-41

TABLE 37

Sludge Concentration Produced by Centrifugal Dewatering

Sludge	Solid Bowl Conveyor Centrifuge (% TS)
RP or DP	28–35
RP + TF	20–26
RP + AS	18–24
AS	12–15
Lime sludge	45–60
Alum sludge	15–25
Heat treated sludges	30–40

Key: R = raw; P = primary; TF = trickling filter; AS = activated sludge; and DP = anaerobic digested primary.

SOURCE: Water Pollution Control Federation, Manual of Practice No. 8

Belt Press

Until recently, belt presses were used in this country only for industrial applications. Today, the belt press is commonly used as a sludge dewatering unit. The process essentially consists of two belts guided by several rollers or drums. Sludge is fed onto the lower belt, travels through the press and is physically squeezed between the two belts as shown in Figure 27. Two processes actually take place as sludge travels through the unit. In the early stage, "free water" is drained by gravity. Following that, a pressure phase, in which the two belts are brought close together to create pressure on the sludge, squeezes water through the pores of the filter belt. The belt press process is continuous, offering similar dewatering capability to that provided by the centrifuge, while requiring less horsepower for operation.

Degritting sludge is as critical a pretreatment for the belt press as for the centrifuge. Addition of polymer is a must to aid the release of water. Polymer dosage depends largely on the type of sludge to be dewatered and the desired solids concentration in the sludge. Although the sludge press consists of many moving parts, the filter belt itself is most susceptible to wear as well as blinding (plugging of the belt pores). It is important that a constant flow of clear wash water be directed on the belt to cleanse it of solids particles.

In addition to polymer feed and wash water, the belt press requires ancillary equipment similar to the centrifuge. Figure 28 illustrates a typical belt press installation. Several modifications are available such as high pressure sections and vacuum assisted sections, which can be added to a press to help obtain a more concentrated sludge. Table 38 outlines expected belt press dewatering results. It should be noted that with a belt press, solids capture is normally 90 percent or better, resulting in lower solids and COD centrations in the filtrate (equivalent to centrate) than can be obtained in the centrifuge.

Plate and Frame Filter Press

The plate and frame filter press was developed in Europe and Japan and has been used sparingly in the United States. There are many varieties, but all operate on the principle of pressure filtration. Several vertical plates are mounted on a frame in a horizontal plane (see Figure 29). When horizontal pressure is applied, the plates lock together, forming a group as shown in Figure 30. A filter cloth is located on the face of each plate forming a continuous filter cloth envelope within each plate. Sludge is fed through a horizontal pipeline on the axis of the plates. Sludge enters each plate or filter cloth envelope. As the sludge is pressurized, water is forced out through the filter cloth and collected in a filtrate pipeline. Dewatered sludge collects on the filter cloth surface. After one to four hours, pressure is then released, the plates are separated and dewatered sludge falls into a hopper for disposal.

FIGURE 27

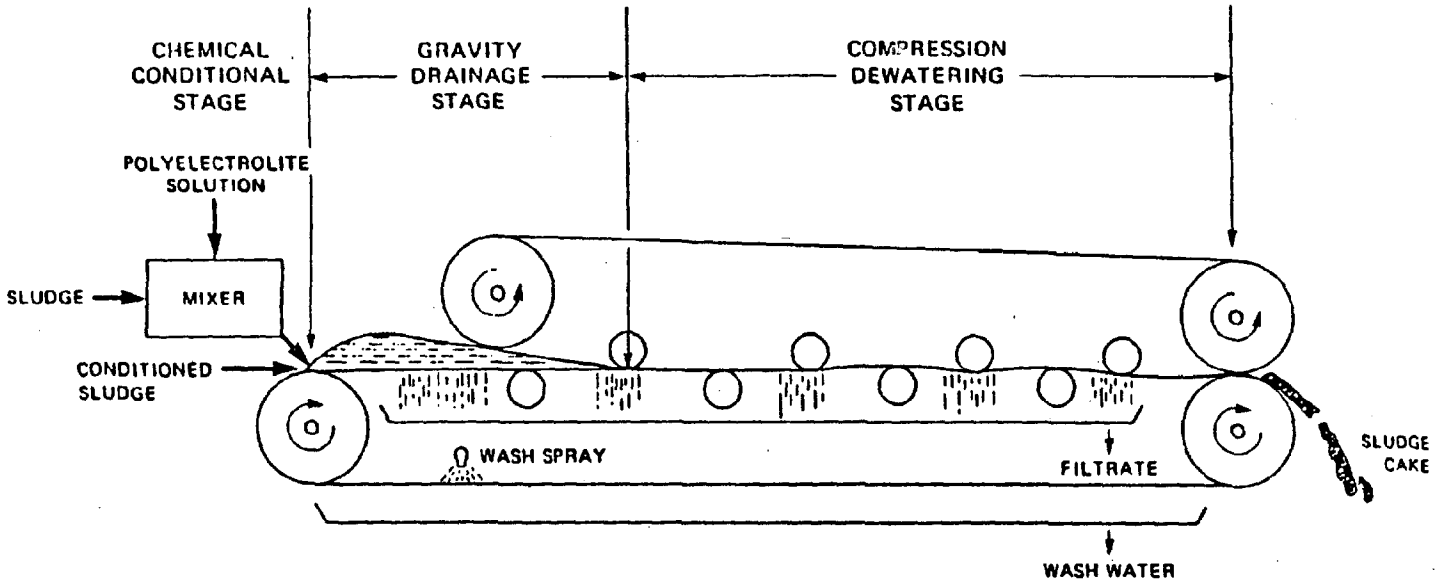

THE THREE BASIC STAGES OF A BELT PRESS

SOURCE: "Process Design for Sludge Treatment and Disposal", USEPA 625/1-79-011, Sept. 1979, p.9-46

FIGURE 28

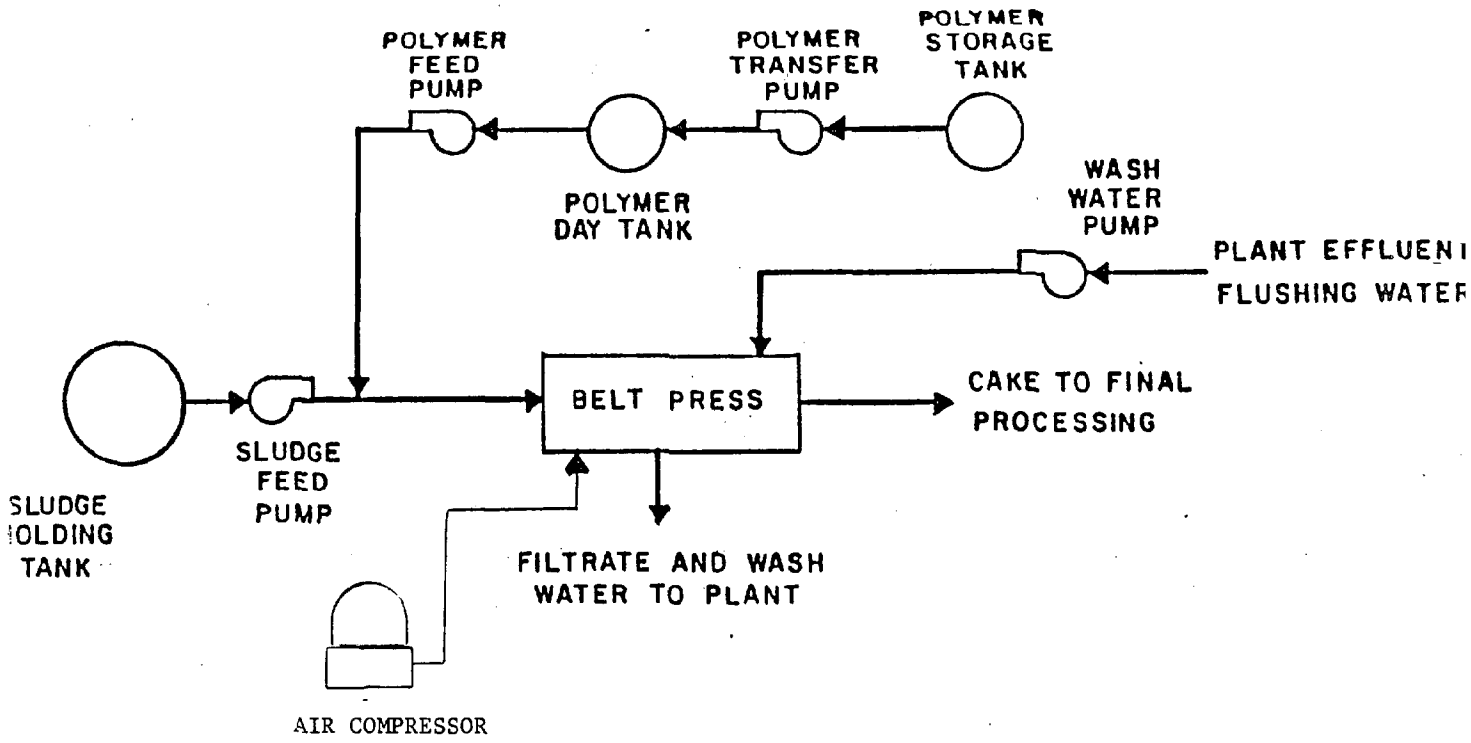

BELT PRESS DEWATERING PROCESS

SOURCE: "Sludge Processing and DIsposal", Los Angeles County/Orange County Sanitation Districs, April, 1977.

TYPICAL DEWATERING PERFORMANCE OF BELT FILTER PRESSES

Type of sludge	Feed solids, percent	Cake, percent solids	Polymer, pounds dry per ton dry solids
Raw primary (P)	3-10	28-44	2-9
Waste activated sludge (WAS)	1-3	16-32	2-4
	0.5-1.5	12-28	4-12
P + WAS	3-6	20-35	2-10
P + trickling filter (TF)	3-6	20-40	3-10
Anaerobically digested			
P	4-10	26-36	2-6
WAS	3-4	18-22	4-8
P + WAS	3-9	18-44	3-9
Aerobically digested			
P + WAS	1-3	12-18	4-8
	6-8	20-30	2-5
Thermal conditioned			
P + WAS	4-8	38-50	0

TABLE 38

SOURCE: "Process Design for Sludge Treatment and DIsposal", USEPA 625/1-79-011, Sept. 1979, p. 9-48.

FIGURE 29

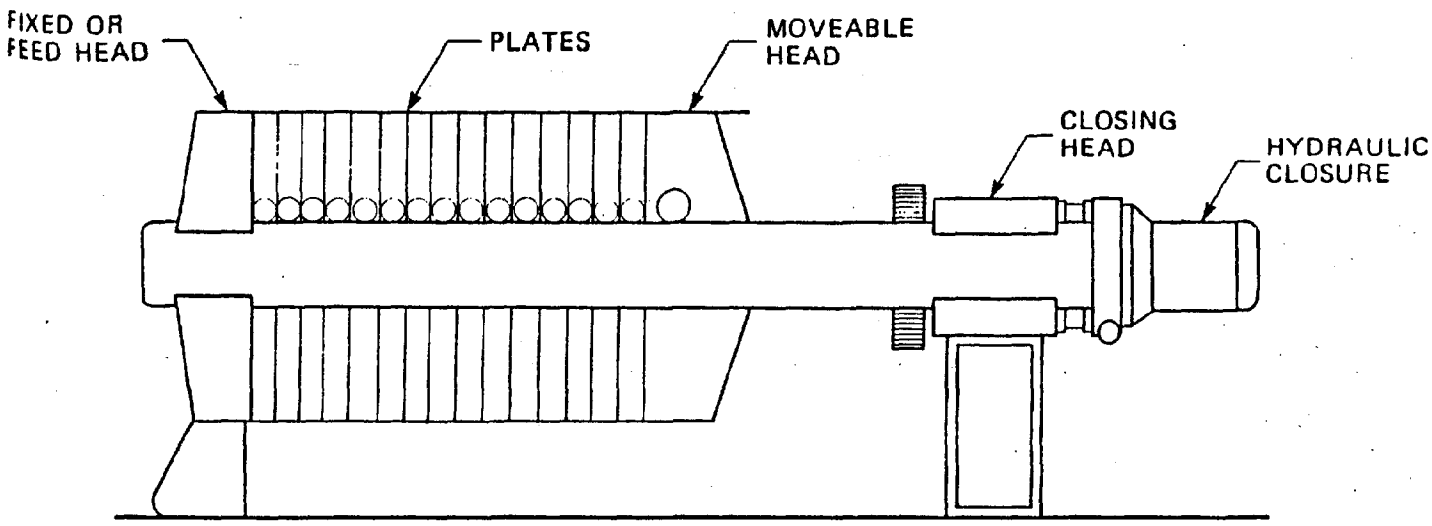

SCHEMATIC SIDE VIEW OF A RECESSED PLATE PRESSURE FILTER

SOURCE: "Process Design for Sludge Treatment and Disposal", USEPA 625/1-79-011, Sept. 1979, p. 9-53

FIGURE 30

PLATE-FRAME FILTER PRESS

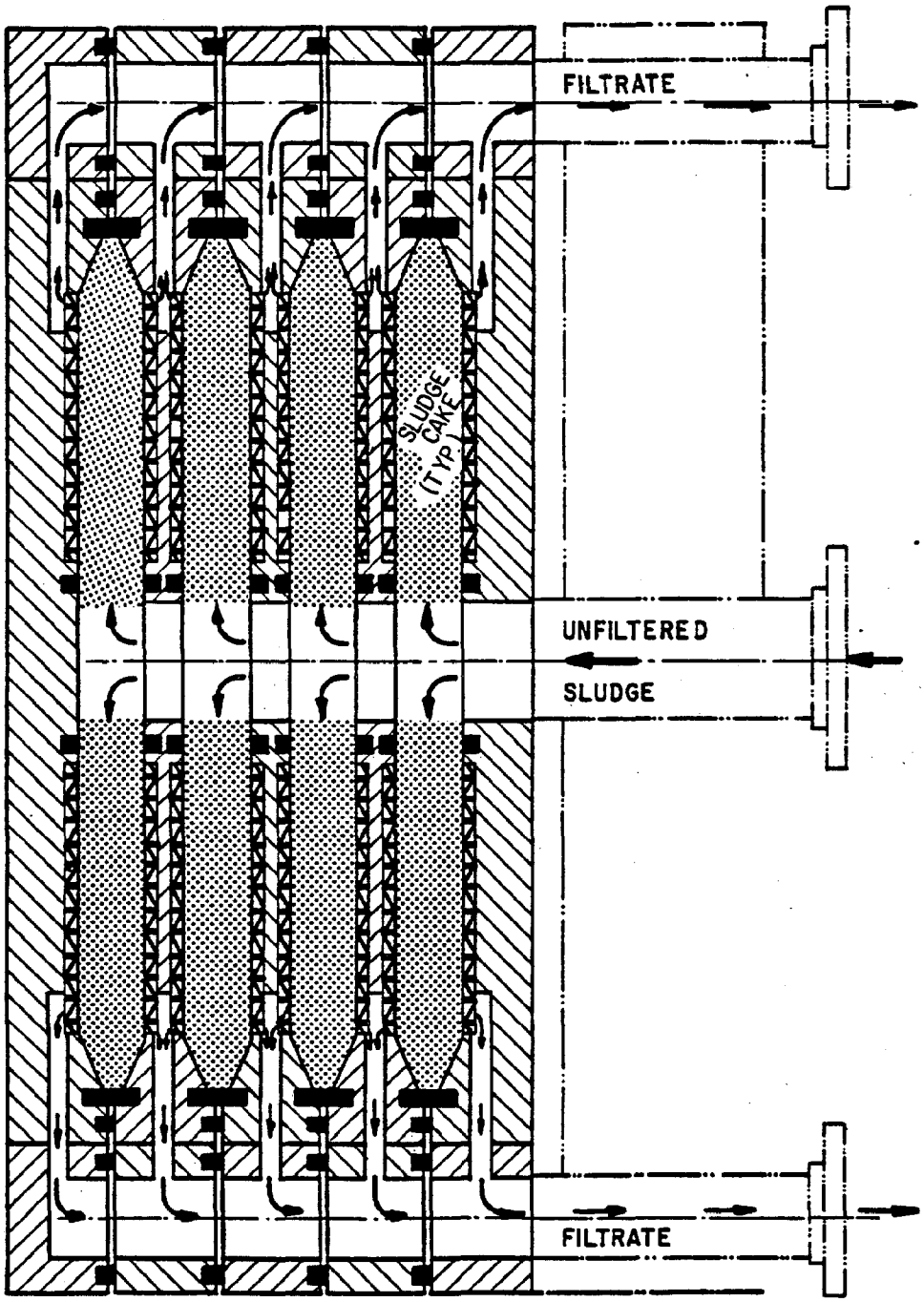

SOURCE: "Sludge Processing and Disposal", Los Angeles County/Orange County Sanitation Districts, April 1977, p. 5-8

Several types of plate and frame presses are available. They are generally described as high or low pressure and fixed or variable volume. The low pressure units operate at approximately 100 pounds per square inch (psi), while high pressure units are operated at 220 to 250 psi. Fixed volume units are operated as described above. The sludge itself is pressurized and the process continues until the plates are packed full of dewatered sludge. A variable volume press contains a rubber diaphragm placed behind the filter cloth. Sludge is fed into each plate until the plates are full. Pressure is then applied to the area between the diaphragms, resulting in the application of pressure on the sludge. Sludge and filtrate are collected in a similar manner for each type of press.

Plate and frame filter presses require considerable sludge conditioning to produce a manageable sludge product. It is common to use a combination of ferric chloride, lime, ash or polymer to produce an acceptable sludge. These substances increase the ability of sludge to be dewatered. Sludge can be dewatered without the use of polymers. However, sludge is difficult to remove from the plate and can require a considerable amount of additional labor. It is good practice to include an acid wash system to clean the plates and filter cloth of the sludge chemcial mixture.

Figure 31 illustrates the equipment required for a typical plate and frame installation. Because of the equipment, the fact that it is a batch process, the extensive amount of labor required to operate the system, and relatively high energy costs, this process is usually used only when a high level of dewatering is required to incinerate a sludge of limited dewaterability, such as waste activated sludge (excess solids removed from the treatment process for disposal).

Typical solids concentrations from the use of plate and frame filter presses are shown in Tables 39 and 40. Variable volume presses perform slightly better than the fixed volume press. Filtrate from the plate and frame filter press is relatively low in pollutant concentration, similar to the belt press. Solids capture is typically above 90 percent.

Air Drying

Air drying of sludge is accomplished by placing liquid sludge on specially constructed drying beds. Sludge dries on beds by evaporation of moisture and gravity drainage to an underlying, perforated pipe drainage system. This drainage is then returned to the plant process for treatment. (See Figure 32, typical sludge drying bed construction.)

Drying beds are land-and labor-intensive since sizeable areas are required and drying beds are generally cleaned by hand. For these reasons, sludge drying beds are generally used only at plants less than one million gallons per day (mgd) capacity. Despite occasional claims to the contrary, sludge will not dry on beds when frozen. Therefore, approximately four months of storage is required to accommodate the winter months. For adequate performance, sludge drying beds should be roofed to prevent rainfall from entering but not enclosed so that adequate ventilation is available.

FIGURE 31

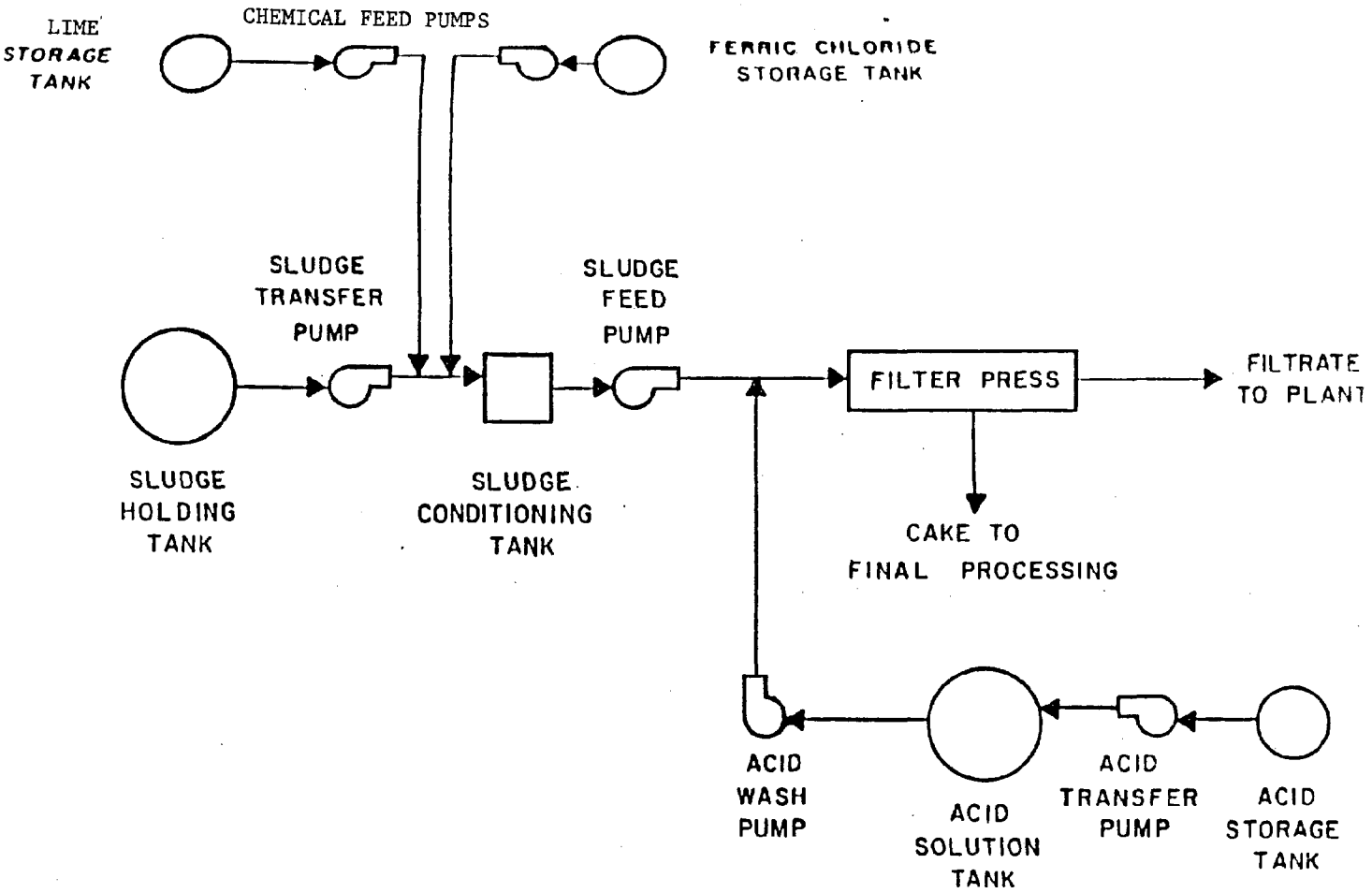

CONVENTIONAL LOW PRESSURE (100 PSI) FILTER PRESS SYSTEM

SOURCE: "Sludge Processing and Disposal", Los Angeles County/Orange County Sanitation Districts, April 1977.

TABLE 39

TYPICAL DEWATERING PERFORMANCE OF A VARIABLE VOLUME RECESSED PLATE PRESSURE FILTER

Site	Type of sludge	Feed solids, percent	Chemical dosage,[a] lb/ton dry solids		Yield, lb/sq ft/hr	Percent solids	
			$FeCl_3$ [a]	CaO[a]		Cake with chemicals	Cake without chemicals
	Anaerobically digested[b]						
1	60 P: 40 WAS	3.8	120	320	1.0	37	30
2	60 P: 40 WAS	3.2	180	580	0.7	36	25
3	40 P: 60 WAS	3.8	120	340	0.6	40	32
4	40 P: 60 WAS	2.5	180	500	0.6	42	30
5	50 P: 50 WAS	6.4	80	220	2.0	45	39
6	60 P: 40 WAS	3.6	160	320	0.8	50	40
7	Raw WAS	4.3	180	460	0.6	34	25
8	Raw (60 plus 40 WAS)	4.0	100	300	0.9	40	33
9	Thermal conditioned 50 P: 50 WAS	14.0	0	0	2.5	60	60

[a]All values shown are for pure ferric chloride and lime. Must be adjusted for anything else.

[b]P = primary sludge; WAS = waste-activated sludge.

1 lb/ton = 0.5 kilograms/ton
1 lb/sq. ft./hr. -= 4.9 $kg/m^2/hr$.

SOURCE: "Process Design for Sludge Treatment and Disposal", USEPA 625/1-79-011, September 1979, p. 9-56

TABLE 40

EXPECTED DEWATERING PERFORMANCE FOR A TYPICAL FIXED VOLUME RECESSED PLATE PRESSURE FILTER

Type of sludge	Feed solids, percent	Conditioning dosage, lbs/ton dry solids			Cake with conditioning material, percent solids	Cake without conditioning material, percent solids	Cycle time, hours
		$FeCl_3$[a]	CaO[a]	Ash			
Raw primary (P)	5-10	100	200		45	39	2.0
				2,000	50	25	1.5
Raw P with less than 50 percent waste activated sludge (WAS)	3-6	100	200		45	39	2.5
				3,000	50	20	2.0
Raw P with more than 50 percent WAS	1-4	120	240		45	38	2.5
				4,000	50	17	2.0
Anaerobically digested mixture of P and WAS							
Less than 50 percent WAS	6-10	100	200		45	39	2.0
				2,000	50	25	1.5
More than 50 percent WAS	2-6	150	300		45	37	2.5
				4,000	50	17	1.5
WAS	1-5	150	300		45	37	2.5
				5,000	50	14	2.0

[a]All values shown are for pure ferric chloride and lime. Must be adjusted for anything else.

1 lb/ton = 0.5 kilograms/ton
1 lb/sq. ft./hr. = 4.9 $kg/m^2/hr$.

SOURCE: "Process Design for Sludge Treatment and Disposal", USEPA 625/1-79-011, September 1979, p. 9-56

FIGURE 32

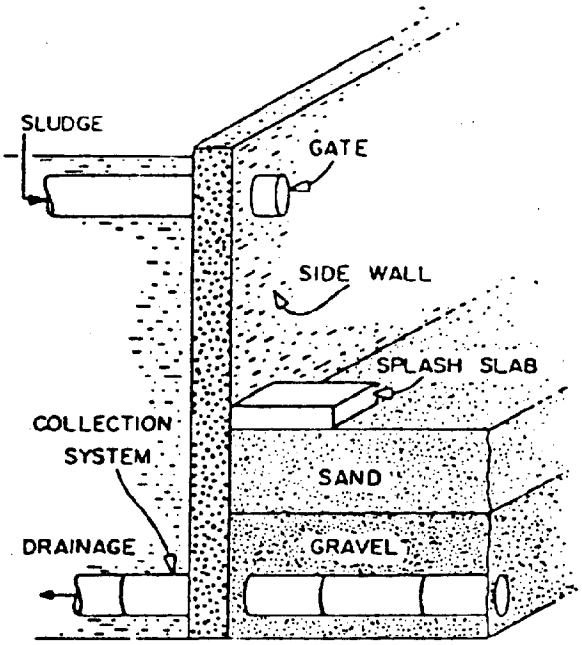

Typical sludge drying bed construction.

SOURCE: "Operations Manual: Sludge Handling and Conditions", USEPA 430/9-78-002, February 1978, PX II - 2

Vacuum Filter

Often used in the past as a dewatering device, vacuum filters have passed out of favor because of high operating costs (energy, chemicals, and labor) and their inability to compete with other methods in terms of cake dryness. While some vacuum filters are used in the region now, upgrading this equipment to belt presses is recommended where economic factors warrant.

Basically, a vacuum filter consists of a large cylindrical drum covered with a "filter" (fabric or coil). The lower third of the drum is rotated through a trough of sludge and a vacuum is applied to the inside of the filtered drum. As the drum rotates in the sludge, sludge is drawn onto the drum by the vacuum and moisture is drawn through the sludge and drum cover. At a certain point, the dried sludge is scraped from the drum onto a conveyor while the drum rotates. Sludge is again drawn onto the drum and the process is repeated. Figure 33 shows a rotary drum vacuum filter.

Comparison of Dewatering Processes

Table 41 is a comparison of the advantages and disadvantages of all the dewatering processes described previously.

ROTARY DRUM VACUUM FILTER

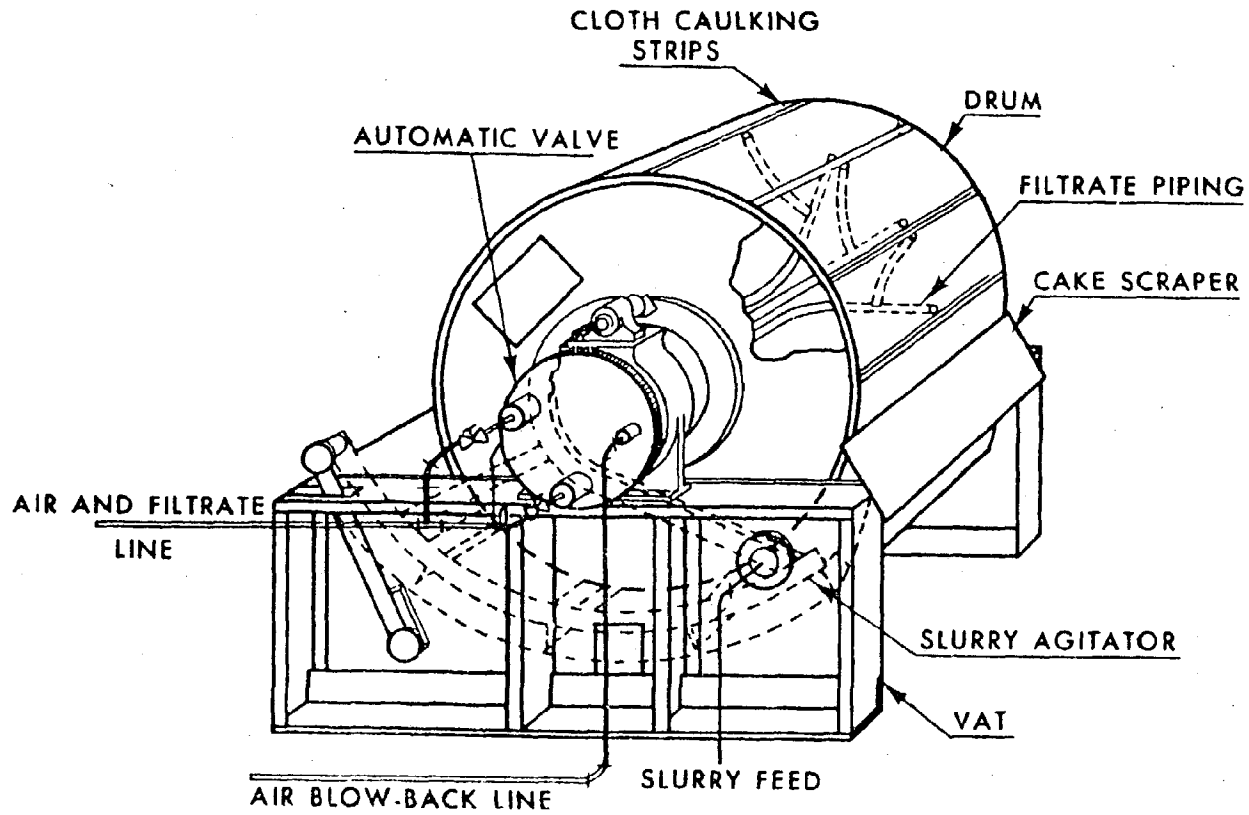

SOURCE: "Sludge Processing and Disposal", Los Angeles County/Orange County Sanitation Districts, April 1977, p.5-13

FIGURE 33

TABLE 41

COMPARISON OF DEWATERING PROCESSES

Process	Advantages	Disadvantages
Centrifuge		
Disc nozzle	Yields highly clarified centrate without chemical conditioning. Large liquid & solids handling capacity in a small space. Produces little odor. Can produce sludge solids concentrations up to 6 percent. Continuous operation.	Must use sludge with particle size of 400 microns or less. Requires extensive pre-screening & grit removal. Requires skilled operators.
Basket	Same machine can be used to thicken and dewater. Has lowest O&M costs of the centrifuges. Can thicken hard-to-handle sludges. Little odor. Can produce solids concentrations of 10 percent. Best for small plants,1 to 2 million gallons/day.	Unit is a batch process. Has highest capital cost to capacity ratio. Requires extensive structural support. Performance affected by solids feed rate.
Solid Bowl Conveyor	Yield high throughout in a small area. Is quiet and easy to install. Produces no odor. Low capital cost. Can produce solids concentrations to 8 percent. Continuous operation.	Can have high maintenance costs. May require polymers to operate. Requires skilled operators and maintenance personnel. Requires grit removal.
Belt Filter Press	Continuous operation. Cake concentrations to 44 percent are possible. Lower power requirements than other mechanical processes.	Needs chemical conditioning. Sensitive to sludge feed characteristics.
Pressure Filters	Especially effective on waste activated sludge May get sludge cake up to 50 percent solids.	Chemcial conditioning sometimes required. Batch process.

Conclusions

Sludge dewatering is most effectively accomplished by mechanical means at sewage treatment plants of about one million gallons per day (mgd) capacity and above. Currently centrifuges and filter presses are the most efficient mechanical dewatering devices available. Although some STPs in the region use vacuum filters, high energy, chemical, and labor costs, coupled with low solids content of vacuum filtered sludge (usually less than 20 percent), have made vacuum filters a poor choice. Air drying of sludge, a non-mechanical dewatering process, is appropriate only at very small plants because of the relatively large land area needed to construct drying beds, the labor intensity of the process, and the storage capacity required during periods when air temperatures are below freezing.

The type of mechanical dewatering device used depends on the level of dewatering (percent solids) desired and the type and nature of sludge to be dewatered. In EFC's experience, belt filtration is preferred over centrifugation in most cases for the following reasons:

- Lower operation and maintenance costs
- Higher reliability
- Higher cake solids of dewatered sludge
- Simplicity of operation.

The belt filter press is recommended in all cases except when sludge solids concentrations of 35 percent or greater are required. The reasons for recommending belt presses over plate and frame presses are the same as those listed above with the exception of the third item.

Decisions regarding dewatering are primarily based on the ultimate disposal option being used and the related transportation costs. In general, dewatering sludge substantially reduces the volume to be transported.

Dewatering and Technical Alternatives

The following is a brief discussion of dewatering in terms of the specific disposal alternatives considered in this report.

Landfill

Dewatering to at least 20 percent solids is required by NYSDEC regulations. Dewatering to greater than 20 percent is desirable to conserve available landfill space and reduce the amount of moisture which can contribute to leachate formation. Dewatering to 20 percent solids increases the costs of chemicals and labor, but generally results in lower transportation costs and tipping fees to dispose at the landfill.

Ocean Disposal

Currently sludge is barged to sea from the Yonkers STP at two to three percent solids. This means that 97 to 98 percent of this sludge is water. Previous engineering studies[1] conducted for Westchester County have recommended sludge dewatering prior to ocean disposal. While dewatering may appear to be an obvious advantage, several factors must be considered regarding dewatering in this instance.

1. Retrofitting existing barges will be necessary as these vessels are equipped with pumps to discharge sludge at two to three percent solids. These pumps will be limited by the solids concentration they can pump. If sludge is dewatered to greater than 18 to 20 percent solids, equipment in the form of cranes, conveyors, etc., will be required.

2. As a result of public pressure, local officials have adopted a policy not to expand the Yonkers STP. The addition of dewatering equipment to the plant could be considered "expansion" and not acceptable under the terms of this policy.

3. Recently negotiated contracts for barging sludge probably specify the consistency of the sludge. Such contractual terms may be difficult or impossible to renegotiate.

Land Application

Generally, sludge is land applied as a liquid (two to five percent solids). However, equipment is available to land apply sludge at virtually any level of dryness. One advantage of liquid application is that the sludge may be continuously enclosed, thereby reducing or eliminating odors. The question of whether to dewater sludge destined for land application is generally a straightforward economic one of dewatering costs versus transportation costs.

Composting

The composting process requires that sludge be dewatered to at least 20 percent solids. Higher solids concentrations are generally desirable as less bulking agent is required.

Thermal Reduction

Dewatering for thermal reduction is absolutely essential. Depending on the type of reduction process employed and the volatile solids ratio of the sludge, dewatering to 23 percent to 35 percent or more is necessary for efficient combustion. USEPA studies cited elsewhere in this report describe cost reductions on the order of 50 percent when dewatering is improved to optimum levels. The optimum level is the point at which the sludge will be autogenous (capable of combustion without an external fuel source).

Transporting Sludge

Methods of Transport

Sludge may be transported four ways: truck, pipeline, barge, and rail. The method of transport is a function of three primary variables: use and disposal method (land application, landfilling, sludge product distribution and marketing, incineration, ocean disposal), volume and solids content of sludge, and distance to and number of destination points.

Truck Transport

Trucks can be used to haul both liquid and dewatered sludge. Truck transport can be attractive because: routes and terminal points are flexible and can be changed at low cost, no intermediate storage or pumping steps are necessary, and equipment may be owned by the plant or leased. Trucks come in a variety of sizes with special features available such as spreaders, auger beaters and subsoil injectors for various methods of application.

Diesel-fueled trucks are the most economical if larger sized vehicles are needed or if high annual mileage is anticipated.

The economic limits for hauling sludge by truck over distance depend on the degree to which it has been dewatered. However, the cost of dewatering the sludge must be factored in when evaluating the apparent savings in hauling a drier sludge.

Truck hauling can be the most economical way to transport sludge at distances less than 150 miles. Total costs include the size of the fleet plus mileage. Liquid sludge is transported in tank trucks which are designed in the following capacities: 1,600, 2,000, 2,500, 3,000, 4,000 and 6,000 gallons. State laws determine tanker dimensions and maximum load. However, liquid sludge is usually hauled in tanks less than 6,000 gallons. The volume selected depends on loading and unloading times, haul distance and trip frequency.

Dewatered sludge is hauled in open trucks with capacities ranging from seven to 36 cubic yards. As with tank trucks used for hauling liquid sludge, maximum truck loads are set by state laws.

Trucks are used in conjunction with pipeline or railroad to an intermediate storage facility and used to haul sludge to an incinerator, or haul residual ash from an incinerator to a landfill.

The number of trucks necessary for a given plant is a function of truck capacity, volume of sludge to be hauled, and travel and unloading time, with the last two variables directly related to distance from the plant to the destination point.

Environmental Impacts of Truck Transport

Care must be taken to minimize the environmental impacts caused by truck transport. Spills must be prevented during loading and unloading of both tankers and open standard highway trucks. Standard trucks used for hauling dewatered sludge should be equipped with watertight seals which are not necessary for hauling very dry or composted sludge (greater than 50 percent solids). Trucks hauling dewatered sludge are generally fitted with tarpaulins during transit.

Minimizing Equipment Cost of Truck Transport

The cost of operating hauling equipment can be minimized by making maximum use of the vehicle. However, vehicle use is limited by certain variables such as the amount of light available for daylight trucking operations. Because most truck crews work the dayshift, this eight hour period may not be sufficient to haul the daily volume of sludge generated. For this reason, short-term sludge storage facilities at wastewater treatment plants may be necessary.

Transport by Pipeline

The transport of sludge through pipes can be attractive and economic for sludge as well as for limited amounts of miscellaneous residuals such as screenings, grit, and scum, particularly if the costs of mechanical dewatering can be avoided.

Pipelining sludge involves the use of various types of pumps. Losses in pressure from pumping the sludge through pipelines must be estimated for they are not available from standard reference tables. Procedures for calculating changes in elevation and velocity are the same as for water, but sludge has greater frictional losses than does water when pumped under the same conditions.

Dewatered sludge may be transported by either short or long piplines. Short pipelines (up to 10 miles) will effectively transport sludge dewatered up to 20 percent solids while long pipelines (greater than 10 miles) can handle sludge up to eight percent solids.

There are advantages to pumping digested sludge through piplines: it is easier to pump, and septic conditions resulting in sludge thickening, odors, or corrosion do not occur or are less severe than with raw sludge.

A drawback to pipelining sludge is that source and terminal points are fixed, resulting in less flexible routes which are then costly to change.

Ocean outfalls, i.e. direct pipeline discharge to the sea, are being phased out as they are no longer legal under the federal Clean Water Act.

Barge Transport

Barge transport of sludge requires two primary conditions: a wastewater treatment plant proximate to a suitable waterway with necessary shipping and receiving ports, and pumpable sludge. The amount of waterway traffic which may affect transit time is also an important consideration.

Barges are of two types: towed and self-propelled. Generally only large operations can afford the latter type. Therefore, contracts must be made with tugboat firms to move the powerless barges. In addition to the design and operation of the vessel itself, the following must be considered: pumps, piping, and docking facilities as well as any sludge storage facilities necessary.

Barge transport is generally not cost effective for small to medium size operations (less than 2,000 wet tons of sludge per year) because they do not generate a sufficient amount of sludge. However, coastal municipalities in New York and New Jersey combine sludge volumes through interfacility pumping to a transfer station, or use a common hauler which makes a series of pick-ups along the disposal route. By these methods, plants generating relatively small volumes of sludge may achieve lower individual transport costs through a collective economy of scale.

Rail Transport

Railroads are not commonly used to transport sludge in the United States. Although railroads have the advantage of established rights-of-way, lower energy cost per unit volume hauled over long distances, and equipment that can be leased, they suffer the same disadvantage as do pipelines: fixed endpoints and inflexible routes.

When rail is used to transport sludge, terminal facilities are required for loading and unloading sludge to and from the rail cars.

Cost Considerations for All Methods

Costs for truck, rail and barge transport include building, operating and maintaining equipment and facilities, travel distances, transit time, and vehicle size and efficiency. Costs will also include expenses involved in intermediate (mode-to-mode) transfers, such as truck to truck as well as intermodal transfers such as truck to rail.

Transportation costs may not be easily generalized because costs are plant specific and are not directly transferable to other plant situations.

Each mode of sludge transport has its comparative least cost range under specific conditions of variables distance and volume. For example, when transporting liquid sludge (not dewatered):

- Trucking is the least expensive way to haul sludge one way, for a distance of 20 miles or less for volumes less than 10 to 15 million gallons per year.

- Pipeline is the least expensive way to transport sludge for volumes greater than 30 to 70 million gallons but becomes too capital intensive for volumes less than 10 million gallons.

- Rail and barge modes are comparable in cost for volumes between seven million and 700 million gallons over long haul distances (greater than 10 miles). However, barging becomes more economical than rail for short to medium distances and for volumes greater than 30 million gallons per year.

Transfer Stations

If wastewater treatment plants are of small to medium size it may be cost effective for the counties or municipalities involved to consider a joint transfer station from which larger quantities of accumulated sludge may be more cheaply transported to a final destination.

Ideally, a transfer station should be equidistant to all points of sludge generation so that the costs of wear and tear of equipment and total employee hours will be equal for all participating plants. Because of limited site availability, however, establishing minimum transport distances for each plant in the transfer network may not be possible.

Depending on the percent solids concentration of the sludge from participating plants, various types of loading and unloading equipment may be necessary to transfer sludge at transfer stations.

Environmental Impacts of Transportation

Environmental impacts from transportation include spills or leaks during transfer or transport operations, impact on pavements from trucks and possibly odors from carrying sludge in open vehicles, although it is possible to cover open trucks once loaded.

COMPARISON OF COSTS FOR SLUDGE MANAGEMENT ALTERNATIVES

The costs of implementing the five sludge management alternatives considered in this study are displayed in Table 42. The cost data for land application, composting, and incineration alternatives were developed using "Handbook - Estimating Sludge Management Costs", EPA/625/6-86/010, October 1985. Detailed cost calculations for these three alternatives are shown in Appendix E.

The costs for ocean disposal were derived from data provided by the Westchester County Department of Environmental Facilities based on the most recent contract bid price. As the cost of ocean disposal is based on a fixed price per unit, it includes both the capital cost and the operation and maintenance cost for appoximately 35 dry tons per day. The landfill costs were calculated by EFC; details are included in Appendix E. These costs are based on two hypothetical co-disposal sites of 100 acres and 880 acres for municipal solid waste combined with sludge and septage.

Table 42 and Table 43 show base capital cost and annual operation and maintenance (O&M) costs for a 10 dry tons per day (3,650 tons per year) and a 30 dry tons per day (10,950 tons per year) for the land application, composting and incineration alternatives.

Costs in Table 42 are given in thousands of dollars. Costs in Table 43 are in dolars per dry ton. All costs are based on the fourth quarter 1984, Engineering News Record Construction Cost Index of 4,171. To derive capital cost per ton, a amortization period of ten years was used at 12 percent interest.

TABLE 42

COSTS TO IMPLEMENT SLUDGE MANAGEMENT OPTIONS

($1,000)

	LAND APPLICATION		COMPOSTING		INCINERATION				OCEAN DISPOSAL (35 TPD)	LANDFILL	
					MULTIPLE HEARTH		FLUIDIZED BED			11 TPD 100 ACRES	100 TPD 880 ACRES
	10 TPD	30 TPD	10 TPD	30 TPD	10 TPD	30 TPD	10 TPD	30 TPD			
BASE CAPITAL ($)	650	2,000	1,000	4,400	3,300	5,300	1,600	2,350	138	225	138
ANNUAL O & M ($)	160	470	400	950	550	1,400	800	1,100			

TPD = tons per day

TABLE 43

COST PER TON FOR SLUDGE MANAGEMENT OPTIONS

($/TON)

	LAND APPLICATION		COMPOSTING		INCINERATION				OCEAN DISPOSAL (35 TPD)	LANDFILL	
					MULTIPLE HEARTH		FLUIDIZED BED			11 TPD 100 ACRES	100 TPD 880 ACRES
	10 TPD	30 TPD	10 TPD	30 TPD	10 TPD	30 TPD	10 TPD	30 TPD			
O & M ($)	44	43	110	87	151	128	219	100	109	56	38
CAPITAL AND O & M ($)	75	75	168	158	311	214	284	138			
LAND AREA REQUIRED	5 ACRES/ DAY	15 ACRES/ DAY	5 ACRES	13 ACRES						100 ACRES	880 ACRES

TPD = tons per day

OTHER WASTESTREAMS GENERATED DURING THE SEWAGE TREATMENT PROCESS

Several wastestreams are generated during the sewage treatment process which should be considered in any sludge management plan.

Grit

Inorganic particles similar to sand enter the collection system through manholes, storm water connections, infiltration, and other sources. Quantities of grit vary substantially. The integrity of the sewer collection system is key in eliminating grit. A leaky collection system will carry large amounts of grit into the system with storm or groundwater. The type, method of operation, and efficiency of the grit removal system installed at a particular STP will also affect the quantities of grit needing disposal.

Floatable Solids

These include grease, scum, plastic and rubber goods which, because of their resistance to treatment by conventional treatment processes are removed by skimming devices and separated for special handling. While the quantities of floatable solids are fairly stable for domestic waste, commercial and industrial discharges can substantially affect the quantities.

Screenings

Bar screens are included as preliminary treatment at most STPs. Materials captured on screens are generally removed and separated for special handling. The type, size, and frequency of cleaning of bar screens affects the quantity of screenings generated.

Industrial Wastes

In many cases, industries either do not discharge their wastes to municipal collection systems or their wastes are pretreated prior to discharge into the municipal system. The quality and quantity of such wastes will vary with the type of waste generated and the type of pretreatment process employed. Industrial and commercial wastes were specifically excluded from this study. However, EFC recommends that any future design effort toward a regional facility consider such wastes. A waste management program which ignores industrial and commercial wastes may severely hamper business development in the region.

Table 44 estimates the quantities of grit, floatable solids, and screenings generated by each county. The following factors were applied to arrive at these estimates:

grit	47 pounds per million gallons per day (mgd)
floatable solids	7 pounds per million gallons per day (mgd)
screenings	6.5 pounds per million gallons per day (mgd)

TABLE 44

PROJECTED QUANTITIES OF OTHER WASTESTREAMS
FROM THE SEWAGE TREATMENT PROCESS

County	FLOW (mgd)	GREASE (tons/year)	GRIT (tons/year)	SCREENING (tons/year)	TOTAL (tons/year)
DUTCHESS	14.3	18.3	123.0	17.0	158.3
ORANGE	22.4	28.6	192.0	26.6	247.2
PUTNAM	1.6	2.0	13.7	1.9	17.6
ROCKLAND	30.9	39.5	265.0	36.7	341.2
SULLIVAN	7.3	9.3	62.6	8.7	80.6
ULSTER	9.0	11.5	77.2	10.7	99.4
WESCHESTER	125.1	160.0	1,073.0	148.4	1,381.4
	210.6	269.2	1,806.5	250.0	2,325.7

Due to the high variability in the quantities of these materials, as discussed previously, engineering guidelines give wide ranges for estimating the quantities. One source* gives a grit quantity range of 0.33 cubic feet to 27 cubic feet per million gallons. The factors for industrial wastes were supplied by Mr. Charles DeFazio, P.E., Superintendent of Operations, Albany County Sewer District. They reflect actual quantities received over several years. Albany County experimented with incinerating these materials using a multiple hearth but experienced difficulties. They currently landfill all grit, screenings, and floatable solids.

As the quantity and quality of industrial waste is inconsistent, they cannot be estimated. Industrial wastes would have to be studied by each county and the applicability of disposal options to the specific wastestreams assessed.

* Wastewater Systems Engineering, Dr. H.W. Parker, P.E., Prentice-Hall, Inc., Englewood Cliffs, New Jersey, 1975.

REVIEW OF PREVIOUS COUNTY ENGINEERING REPORTS

RECOMMENDING TECHNICAL ALTERNATIVES

Introduction

To become familiar with previously recommended solutions for sludge management problems in the region, EFC staff reviewed past engineering reports prepared for the seven counties. A description of the contents of these reports is given in this section.

Generally, the reports presented many cost effective and evironmentally sound strategies for sludge management in the region. However, these strategies were not implemented. As a result, sludge management in the region is uncoordinated and many municipalities are unable to manage their wastes in a coordinated, cost effective and environmentally sound manner.

DUTCHESS

"Engineer's Report for the Identification and Resolution of Abnormally High Copper Concentration in Sludge Generated by the Fleetwood and Rockingham Sewage Treatment Plants," Morris and Andros, April 1985 (revised May and October 1985).

The Fleetwood and Rockingham sewage treatment plants, along with several other STPs in the region, have recorded high levels of copper in their sludge. These high copper sludges significantly reduce the options available for their disposal. Sludges containing metals in excess of regulatory limits are restricted from being used for composting or land application. Future restrictions based on metal content which would affect sludge intended for disposal by these methods, as well as by ocean disposal and incineration may be implemented by NYSDEC or USEPA, leaving only landfilling as a possibility.

As the two treatment plants addressed in the study use land disposal to their economic advantage, it was imperative to find the cause of the high copper concentrations and plot a course of action to reduce these concentrations to acceptable levels.

The source of the copper was determined to be the corrosive nature of the potable water supply which caused the release of copper from household plumbing systems into the domestic water. When this water is discharged to the STP as wastewater, the density of the copper causes it to settle out and become incorporated with the sludge.

The report recommended adding a chemical (sodium hexametaphosphate) to coat the copper piping and prevent the removal of copper by the corrosive water supply.

EFC discussed this program with representatives from the consulting firm. The solution is being monitored to determine its success and potential for application at other facilities in the region.

"Dutchess County Resource Recovery Project," Henningson, Durham, and Richardson, September 1981.

Complete copies of this report were not made available to EFC, but only sections relevant to sludge disposal. The "Phase I Final Report" section discusses problems encountered in the process of obtaining a permit to co-dispose sewage sludge with municipal solid waste. It states, "as a result of these potential regulatory problems, it does not seem advisable to combine sludge disposal with solid waste disposal at this time."

Additional considerations relevant to co-disposal are addressed in the "Final Environmental Impact Statement" section. Of major interest here is that only small increases in furnace size and space for co-disposal steam piping would be required to accommodate co-disposal, and that "...sludge from all of the County's major sewage treatment plants, including the proposed Tri-Municipal plant, would only add about 4% to the total load on a resource recovery project."

It was also pointed out that "co-disposal will increase the cost of a resource recovery project." However, this increased cost may be less than the cost for full implementation of a separate sludge management program.

ORANGE

"Report: Alternate Sludge Treatment and Disposal for Orange County Sewer District No. 1," Charles R. Velzey Associates, October 1974.

The drastic increase in fuel prices in 1973-74 caused the Orange County Sewer District (OCSD) to reconsider plans to modify the STP by installing a fluidized bed incinerator. This report considered a number of alternatives for sludge disposal in light of the revised economics associated with incineration:

- aerobic digestion
- anaerobic digestion
- chemical oxidation
- high lime dosage
- heat treatment
- dewatering methods
- land disposal (composting,
- landfilling, agricultural use)

The report recommended modifing the plant to incorporate a high lime dosage system, dewatering the sludge by centrifuge, and using the dewatered sludge as top cover for the landfill to promote growth of the required vegetative cover crop.

The OCSD #1 plant was subsequently modified to include a lime stabilization process. The stabilized sludge continues to be used as mix, co-disposed with the refuse, rather than used as a top cover soil amendment to promote the growth of vegetation as the report recommended. Orange County Health Department officials explained that NYSDEC's policy of not locating landfills over aquifers has restricted lateral expansion of the landfill and limited the amount of top cover available for sludge application.

Orange County/SCA Services - Sludge disposal project, August 10, 1976.

This project planned to apply to land 10 million gallons of sludge and septage per year generated in Orange County. Apparently this was believed to be the total generated in the county at that time. A four million gallon lagoon was planned to store sludge and septage during the times of year when the material could not be applied to land.

The project appeared to be well thought out and technically sound with some exceptions that may reflect a lack of experience. Orange County officials reported that the project was never implemented due to an apparent conflict between a private contractor and the use of public land for the project site. The concept of the project is technically sound and would be appropriate at this time provided land application rates are consistent with the latest regulatory standards, the odor control approach was revised, and a contractor was selected who could demonstrate successful implementation of a large-scale land application project.

"Refuse/Sludge: The sensible approach to co-disposal of domestic refuse and municipal wastewater treatment plant sludge," Wehran Enginering, P.C. and Egan & Sons, Inc. (1980).

This report describes a demonstration project conducted at the Orange County Landfill that co-composted municipal refuse and sewage sludge from the Middletown STP. This was a somewhat innovative project six years ago; Today, co-composting projects are still in the developmental stages. The report discusses the use of a specially designed rotary drum to mix refuse and sludge and separate unwanted materials.

While the report indicated that the demonstration project was successful, the composting process has undergone substantial development during the intervening years and techniques suggested could be considered to be outmoded. The report is an excellent one, however, and demonstrates that such a project could succeed in the region if properly implemented.

"Alternative Action Study: Orange County LF Expansion" - O'Brien & Gere, August 1985.

Orange County initiated this study at NYSDEC's request, because of agency concerns about the potential contamination of the principal groundwater aquifer underlying the Orange County Landfill (OCLF). Current NYSDEC policy is to discourage expansion or construction of landfills over principal aquifers. In addressing the groundwater contamination question, the report concluded that "the natural silt and clay deposits present at the site coupled with an enhanced engineering design of the expansion, including groundwater control and a double liner system with leachate collection, should provide reasonable protection of the principle aquifer located beneath the landfill site and allow the site to be operated in accordance with regulatory requirements."

Alternatives to expanding the existing OCLF were: development of a new regional landfill, energy recovery, materials recovery, and composting.

The study concluded that expansion of the existing OCLF was the preferred alternative as this approach "offered the greatest accessibility, lowest hauling cost, and lowest development cost" and that "energy recovery, which offered the only technically feasible alternative that could potentially effect a significant reduction in landfill requirements, would likely double the cost of waste disposal in the County."

Currently, Wehran Engineering is preparing a draft environmental impact statement on the landfill expansion recommended by this report. Public hearings are anticipated.

PUTNAM

"Septage and Sludge Treatment and Disposal Study for Putnam County, New York," Malcolm Pirnie, June 1981.

This study focused mainly on the problems of septage disposal in Putnam. Individual on-site septage systems are used by approximately 87 percent of the county population. These systems generate approximately 4.7 million gallons (588 dry tons at three percent solids) of septage annually. At the time of the study, there was one site available for septage disposal with a capacity of 300,000 gallons, indicating that over four million gallons of septage were being sent of out of the county for disposal or disposed in the county by unregulated methods.

The report specifically recommended expanding and modifying the Carmel #2 STP so it could accept liquid sludge and septage in a separate process train. After appropriate treatment, this sludge would be dewatered for disposal at a county landfill. In Malcolm Pirnie's opinion, this would resolve the septage disposal problem.

At the time of this writing, the general approach of using an STP to receive liquid septage will most likely be implementated in Putnam.

ROCKLAND

"Rockland County Sewer District No. 1 Sludge Management Report" Metcalf & Eddy Inc./Engineers, January 1980.

This voluminous report is divided into several parts, each dealing with the relevant aspects of sludge management from evaluation of conceptual alternatives to siting an engineered facility. "Part I - Technical Analysis" reviewed all available disposal alternatives and their application to a regional (county) solution to sludge management. This portion of the report concluded by recommending an aerated static pile composting facility and seasonal land application of sludge to farmland solely for the use of Rockland County Sewer District No. 1 (RCSD#1) and suggesting that the other county sewer districts seek individual solutions. The rationale for individual approaches appeared to be the one year's lead time required to develop a multi-district solution. Due to this anticipated delay, "the additional interest during construction partially erodes any cost savings offered by a joint facility." An item worth noting is found on page 4-6:

> The analysis of sludge presently produced at the Rockland County plants indicates that the sludge quality is typical of largely domestic wastes. Concentrations of heavy metals and toxic organics are low, making the sludges suitable for any sludge management option, including land application. Pretreatment for the purpose of improving sludge handling appears to be unnecessary.

This statement appears to be contradictory to the finding in this EFC study that high levels of copper in the sludge will restrict its use for land application or composting.

Part II of the consultant's report discusses in detail the existing natural and man-made environment, and the land application and composting alternatives. Three potential compost sites, all in Clarkstown, were identified. No sites with potential for land application were identified within Rockland County. Stewart Airport in Orange County was identified as a suitable site for land application.

The report recomended implementing a composting program at the Clarkstown Landfill and developing a land application program at Stewart Airport and the Merion Blue Grass Sod Farm.

"Value Engineering Study Report, Study No. 1, Rockland County Water Pollution Control Plant," Camp, Dresser & McKee, Inc. and Smith, Hinchman & Grylls Associates, Inc., May-June, 1981.

This study recommended relocating the planned composting facility from the Clarkstown Landfill to the RCSD#1 treatment plant site. With additional recommendations for changes in the plant layout, a $4.8 million cost savings was projected. The project would cost an estimated $70 million.

"Rockland County Sewer District No. 1 Sludge Management Report Draft Environmental Impact Statement (SEQR) Environmental Information Document (NEPA)," Metcalf & Eddy, Inc., Engineers, June 1982.

This report is an environmental assessment of the relocation of the composting site from the Clarkstown Landfill to the treatment plant site as recommended by the CDM value engineering study. The conclusion was that, despite some short term impacts, the treatment plant site was environmentally and economically suitable for the relocation of the composting facility.

"Public Hearing for the Relocation of Rockland County Sewer District No. 1 Proposed Composting Facility - Responsiveness Summary," Metcalf & Eddy,Inc., Engineers, August 11, 1982.

This was prepared in response to comments received at public hearings. It recommended that the composting facility not be relocated to the treatment plant site, as suggested by the value engineering study, because a nursing

home was located within 1500 feet of the proposed facility and the public strongly opposed it. It further recommended that "alternative sites in the vicinity of the Clarkstown Landfill be reconsidered for suitability and that the most cost-effective parcel in that location be selected as the recommended site" (p. 2).

"Rockland County Sewer District No. 1 on Geotechnical Site Feasibility Investigation for Rockland County Compost Facility, Clarkstown, N.Y.," Metcalf & Eddy, Inc./Engineers, July 1983.

This report essentially reevaluated sites in the vicinity of the Clarkstown Landfill which were discarded in favor of the using the treatment plant. A site adjacent to the landfill was chosen. This site, basically, was chosen as the preferred site in the January 1980 report.

SULLIVAN

"Sullivan County Comprehensive Solid Waste Study," Wm. R. Troutman Associates, Professional Engineers, June 1974.

Just one page was devoted to the question of disposal of sludge from municipal treatment plants. As the date of this report predated concerns and strict regulatory constraints relative to sludge disposal, this is not surprising. The closing paragraph of section 5.9 states:

> After the sludge has been adequately treated and dried it may be safely disposed of by incineration, landfill or used as fertilizer on farm land. Because the quantities of residue are small and scattered throughout the County, the present methods of disposal are felt to be satisfactory.

No other, more recent report has been prepared for Sullivan County.

ULSTER

"Solid Waste Management Study for Ulster County," Barton & Loguidice P.C., February 1985.

This report concentrated on the refuse portion of the solid waste stream with minimum discussion of sludge and septage. However, the report makes specific recommendations summarized here:

1. Septage disposal by lagooning, presently the option for two-thirds of Ulster County's septage, should be phased out in favor of disposing of this material at STPs. The report cites available capacity at STPs within the county and warns against potential overloads and upsets due to improper handling of septage at sewage treatment plants.

2. Sludge disposal at landfills or by composting is felt to be more appropriate than co-incineration. Wet sludge "may" be landspread where suitable land is available and if it has been stabilized.

In discussions relevant to sludge and septage disposal, the report points out the problems with present landfills, limited capacity and non-adherance to current regulations, and cites the need for new landfills that will conform to NYSDEC regulations. Potential sites for new landfills, as well as resource recovery facilities and transfer stations, are also discussed.

EFC agrees with Barton and Loguidice's first recommendation to dispose of septage at STPs, as long as adequate sludge handling facilities are available at the treatment plants. Adequate facilities could best be provided at selected regional sites which because of economies of scale, would mean lower costs for construction and monitoring equipment.

With regard to the second recommendation, EFC believes sludge dewatered to 20 to 25 percent solids contains sufficient Btu content to permit co-incineration. This approach is preferable to landfilling and losing this energy value. Landfilling wet sludge (20 percent solids) contributes significantly to leachate formation and wastes landfill capacity when it could be recycled instead.

WESTCHESTER

"Sludge Management Report - Westchester County", Havens and Emerson, Ltd., February 1977.

This report was prepared for the Westchester County Department of Environmental Facilities (DEF) in response to the USEPA ban on ocean disposal of sludge scheduled for December 31, 1981. A lawsuit filed by the City of New York against the USEPA challenging this decision has resulted in an extention of permitted ocean disposal until January 1991. The uncertain future of this disposal method prompted the DEF to commission this report to study the cost effectiveness, environmental impacts and process considerations involved in implementing a sound sludge management program at its seven treatment plants: Ossining, Peekskill, New Rochelle, Mamaroneck, Rye (Blind Brook), Port Chester, and Yonkers. In addition, the consultant reviewed the Interstate Sanitation Commission's (ISC) recommendations for a "Metropolitan Area Sewage Sludge Management Program" for their applicability to Westchester.

Summarizing the methods for sludge management, the report stated:

> "All methods of sludge disposal were reviewed for possible utilization in Westchester County. Sanitary landfilling and land application were not found to be practical within the confines of the County. Composting appears to be a viable sludge stabilization method, but acceptable sludge characteristics (particularly heavy metal limitations) and availability of sufficient land are necessary for successful implementation. Multiple hearth incineration was found to be the best method of thermal reduction of sludge alone owing to the lack of experience with pyrolysis. Co-disposal of sludge and solid wastes by incineration is being practiced in Europe. Co-disposal by pyrolysis is being developed here in the United States".

The report found the sludge disposal plans for New Rochelle, Ossining, Peekskill, and Blind Brook to be cost effective and environmentally sound. It recommended that composting be evaluated for the Peekskill STP.

The bulk of the study concentrated on a management program for the Yonkers facility, the source of approximately 60 percent of the sludge generated in the county. Nine sludge management alternatives were developed for the Yonkers STP:

1. Grasslands Combined Sludge/Solid Waste Thermal Reduction Plant: Barging and Pumping of Liquid Sludge

2. Grasslands Combined Sludge/Solid Waste Thermal Reduction Plant: Trucking of Filter Cake

3. Grasslands Sludge Thermal Reduction Plant: Barging and Pumping of Liquid Sludge

4. Grasslands Sludge Thermal Reduction Plant: Trucking of Filter Cake

5. North Central Yonkers Thermal Reduction Plant: Pumping of Liquid Sludge

6. North Central Yonkers Thermal Reduction Plant: Trucking of Filter Cake

7. Croton Point Thermal Reduction Plant

8. Joint Westchester-Rockland Thermal Reduction Plant

9. Metropolitan Regional Pyrolysis Plant

The conclusions and recommendations of the report are presented here:

Conclusions

1. Land application and sanitary landfilling in Westchester County are not feasible because of the unavailability of sufficient suitable land area, high population density, terrain characteristics, presence of wetlands and flood-prone areas, and the socioeconomic effects of removing large tracts of land from community tax rolls.

2. Recent developments have demonstrated that composting is a viable sludge stabilization method. In Westchester County, however, composting would be limited by heavy metals in the sludge, land requirements and expected difficulties in the development of potential markets.

3. There is insufficient experience at present to design a pyrolysis plant for sludge alone.

4. For Yonkers, multiple hearth incineration is the best proven method of thermal reduction.

5. Disposal as planned for Ossining (incineration), Peekskill (dewater and landfill), New Rochelle (incineration), Mamaroneck (pump to New Rochelle), Blind Brook (Rye)(pumped to Port Chester), and Port Chester (incineration) is considered to be the most feasible means of sludge disposal for the present, considering cost effectiveness, environmental impact and time required for plan implementation.

6. The addition of composting facilities at Peekskill as an alternative to landfill disposal of sludge cake should be evaluated.

7. In the future, consideration should be given to combining sludge disposal for the four plants on Long Island Sound at a single location, to composting some or all of the sludge, and to disposal at the facility to be built for disposal of sludge from Yonkers.

8. Plans developed for Yonkers should consider ease of future expansion to accommodate sludge from other plants.

9. Heavy metals in Yonkers' sludge indicate that thermal reduction is the only viable method for its disposal at this time.

10. Site limitations and environmental factors prohibit the development of thermal reduction facilities at the Yonkers Joint Treatment Plant.

11. Facilities for thermal reduction of sludge at Grasslands will cost less if combined with solid waste disposal.

12. Two possibilities for participation by Westchester County in the ISC recommended Metropolitan Sludge Mangement Program are for disposal of sludge at proposed regional pyrolysis plants to be located at Hunts Point in the Bronx and at Port Newark. However, there are no indications at present as to when or how ICS' recommended program will progress.

13. Based on cost effectiveness, Plan 8 (Joint Westchester-Rockland Thermal Reduction Plant) is the most desirable alternative, but may be difficult to implement.

14. Based on environmental impact, Plan 9 (Metropolitan Regional Pyrolysis Plant), Plan 1 (Grasslands Sludge/Solid Waste Thermal Reduction Facility - Barging), and Plan 5 are preferable.

15. Based on process considerations, the most desirable alternatives are presented by Plan 6 and Plan 2 (Grasslands Sludge Thermal Reduction Facility - Trucking).

16. At some future date, after secondary treatment facilities at Yonkers go into operation and source control of heavy metals is put into effect, sludge may become suitable for composting.

Recommendations

1. Construct sludge disposal facilities for the County wastewater treatment plants at Ossining, Peekskill, New Rochelle, Mamaroneck, Blind Brook (Rye), and Port Chester as planned, with the possible addition of composting facilities at Peekskill.

2. Initiate discussions with Rockland County to explore the possibility of constructing a regional sludge disposal facility on the west bank of the Hudson River to serve the needs of both counties.

3. Should negotiations with Rockland County be unsuccessful (item 2 above), incorporate sludge disposal with plans for thermal reduction of solid waste at Grasslands.

4. As an alternative, consider sludge disposal at a Metropolitan Regional Pyrolysis Plant if and when plans for these facilties develop.

5. Determine the possibility of receiving federal and state aid for any of the management plans.

6. Amend the County's wastewater treatment plan adopted with the 1968 Comprehensive Study when a sludge management program is decided.

In EFC's opinion, the alternatives recommended by this report appear to have considerable merit. However, none of the recommendations were ever implemented. Westchester DEF officials have indicated that the suggestions were virtually ignored because of the availability of ocean disposal, which is low technology and low cost and avoids the sociopolitical problems of siting a land based alternative. DEF officials futher indicated that Westchester County would not seriously consider any alternative to ocean disposal as long as this option was not prohibited. At the time of this report, it appears that ocean disposal will be available to the County for at least the next five years. As much as 10 years could elapse by the time studies are completed on the effects of ocean disposal at the 106 mile site. At the end of whatever review period is required, ocean disposal may still be a viable disposal option. Accordingly, Westchester County may not seriously consider other options as long as ocean disposal is available.

SECTION 4. PRESENT REGULATIONS AND REGULATORY TRENDS RELATED TO SLUDGE MANAGEMENT

This section summarizes existing regulations pertaining to sludge management activities and presents some insight, based on conversations with state and federal officials, on what regulatory policy might be in the future. The reader should consult state and federal regulations for additional information.

Land Application

Land Application Moratorium

Before 1979, a permit was not needed to spread sludge on land. In that year, a Sludge Management Task Force, under the auspices of New York State Department of Environmental Conservation (NYSDEC) recommended that the agency develop regulations to manage land application, which it did in 1980.

The NYS Department of Agriculture and Markets maintained that the new rules were not sufficiently stringent and proposed a moratorium on new applications for landspreading on Class 1 to 4 soils. This represented roughly one-third of the agricultural soils in the state.

The moratorium was to last two years, beginning May 5, 1981, after which regulations would be developed. NYSDEC's intention was to incorporate into its regulations USEPA final regulations concerning heavy metals which the federal agency was to develop during this time. The final federal regulations, however, addressed only cadmium and PCBs and were not as strict as NYSDEC's rules which covered seven metals and PCBs.

NYSDEC and the Department of Agriculture and Markets issued a draft environmental impact statement on the moratorium in the fall of 1982, followed by six public hearings. A final impact statement was released in the spring of 1983. In August of that year, NYSDEC Commissioner Henry G. Williams issued a decision which ended the moratorium. The Commissioner's decision included guidelines for landspreading sludge. Since 1983, all NYSDEC permits issued for landspreading comply with these guidelines. NYSDEC has no plans at present to incorporate the guidelines into regulations.

As with all sludge disposal options, with the exception of ocean disposal, NYSDEC strictly regulates all sludge land application programs. Regulations for land application activities are contained in 6NYCRR Part 360, "Solid Waste Management Facilities" (7/14/85). Policies in these regulations and from other sources are further discussed and interpreted in the publication "Solid Waste Management Facility Guidelines" (5/81) available from NYSDEC.

Sludge Composition

Sludge that does not meet NYSDEC quality requirements may not be applied to land. Attempts to dilute controlled contaminants are not permitted. A sludge generated at a site that does not meet contaminant limits cannot be mixed with "clean" sludge and septage to produce a composite material that meets the regulations. NYSDEC encourages contaminant reduction at the source through an effective pretreatment program or by other means, thereby reducing the total amount of contaminant substances in the environment. Specific contaminants regulated by NYSDEC and their respective limits are delineated in Table 45.

Heavy Metals and Toxic Organics

These substances are tightly controlled because of potential negative effects on the environment. More specifically, some of these substances demonstrate an ability to inhibit plant growth (phytotoxicity), have shown carcinogenic tendencies in humans, and have potential negative effects on food chain animals.

Pathogens

Pathogens are organisms which cause disease in humans. As sewage sludge potentially contains many types and numbers of pathogens, the regulations restrict land application to sludges which have been subjected to a "Process to Significantly Reduce Pathogens" (PSRP). A description of PSRP may be found in Appendix F.

Miscellaneous Factors

As a first priority, sludge must be "clean" and stabilized prior to land application. This may require pretreatment or a treatment plant upgrade. Subsequently, several other considerations also apply. These factors may be generally divided into site considerations and management considerations. In addition to the restraining factors discussed here, agricultural or local laws may present additional impediments.

TABLE 45

CONTAMINENTS REGULATED BY NYSDEC

Parameter	Maximum Concentration, ppm* Dry Weight Basis
Mercury (Hg)	10
Cadmium (Cd)	25
Nickel (Ni)	200
Copper (Cu)	1000
Lead (Pb)	1000
Chromium (Cr)	1000
Zinc (Zn)	2500
Total PCBs	10

* ppm = parts per million

SOURCE: "Solid Waste Management Facility Guidelines; NYSDEC, 5/81, p. 7-1

Site Considerations

1. The land application site may not be located in a floodway, defined in New York State regulations (6 NYCRR Part 500) as "the channel of a river or other watercourse and the adjacent land areas that must be reserved in order to discharge the base flood without cumulatively increasing the water surface elevation more than one foot at any point."

2. Land application to agricultural soil groups 1 to 3 is permissible. However, the cumulative loading limits are more restrictive than on soil groups 4 to 10 (see also "Decision of the Commissioner", Appendix G). Maps indicating soil group classification may be obtained from each county's soil conservation service.

3. The following separation distances from the land application site are prescribed:

- property line - 50 feet
- residence or business (other than the site operator) - 500 feet
- potable well or supply - 200 feet
- surface water body - 200 feet
- drainage swale - 25 feet

4. The following topographic considerations apply:

Liquid sludge (less than 20 percent solids) may be applied to slopes equal to or less than eight percent.

Dewatered sludge (20 percent solids or more), or liquid sludge injected parallel to the land contour, may be applied to slopes equal to or less than 15 percent.

5. A minimum of two feet of soil between surface and bedrock must be maintained. See Table 46 for further soil considerations.

Management Considerations

The Part 360 regulations contain certain program management factors:

1. Loading rates (the rates, generally dry tons per acre, at which sludge may be applied) are to be based on sludge quantity and quality, site characteristics, and plant nutrient requirements.

2. Sludge application must be carried out in a manner to avoid surface runoff and in accordance with surface and groundwater standards.

TABLE 46

Suitability of Soil and Site Characteristics for Sludge Application

Site and Soil Characteristics Affecting Use	Suitability		
	Good	Fair	Poor
Site Features			
Slope	Less than 8%	8-12%	Greater than 12%
Flooding	No Flooding	Floods less than One in ten years	Floods one in 10
Depth to Bedrock (Fractured)	Greater than 5 ft.	2-5 ft.	Less than 2 ft.
Physical Soil Properties			
Texture	Loam, silt loam	Silty clay loam, sandy loam	Sand, loamy sand, clay
Permeability (in hr.)	0.6-6.0	0.2-0.06	Less than 0.06 Greater than 6.0
Approx. depth to seasonal high water table	Greater than 20"	12-20"	Less than 12"
Trafficability (Unified Soil Classification) (Reference 11)	GW, GP, SW, SP GM, GC, SM, SC, ML	CL, MH	OL, OH, PT
Chemical Soil Properties			
pH (in top 20")	Greater than 6.5	5.5-6.5	Less than 5.5
Cation Exchange Cap. (CEC) Meq./100g	Greater than 20	10-20	Less than 10

SOURCE: Solid Waste Management Facility Guidelines, NYSDEC, 5/81, p.7-1 (7)

3. No sludge application is permitted on snow covered or frozen ground or during periods of rainfall.

4. Maximum cadmium (Cd) accumulation that may be added to agricultural soils is five kilograms per hectare (kg/ha) or 4.5 lbs per acre. A limit of three lbs per acre applies to soil groups 1, 2 and 3. Soil background Cd levels are to be determined prior to land application. Annual Cd application rates are 1.25 kg/ha until December 31, 1986. After January 1, 1987, annual Cd application rates are not to exceed 0.5 kg/ha.

5. Soil pH is to be maintained at or above 6.5 during periods of application.

6. Sludge must be incorporated into the soil the same day it is applied.

7. Grazing by animals other than dairy cattle is prohibited for one month after sludge application. Dairy cattle grazing is prohibited for 12 months after sludge application.

8. Public access is prohibited for 12 months after sludge application.

9. Sludge and septage are not to be applied to land currently used for production of food chain crops for direct human consumption nor are such crops to be grown for a period of 18 months following application.

10. Sludge and septage must be handled separately and not mixed, otherwise the more stringent sludge restrictions will apply to the mixture.

11. A sludge stabilized by chlorine oxidation (a stabiliation process that uses high dosages of chlorine) is not suitable for land application.

12. Good soil conservation practices should be used.

13. Storage requirements must be observed.

Methods of Operation

The NYSDEC Guidelines define three categories or levels of operation based on application rates:

Category 1: light loadings of 1 to 3 dry tons per acre per year. Groundwater monitoring and subsurface exploration requirements do not apply to operations in this category.

Category 2: heavier application rates calculated to meet the nitrogen requirements of crops. Application rates here are on the order of five to 12 dry tons per acre per year. Category 2 projects require an engineering report and an environmental impact statement.

Category 3: relatively heavy loadings (up to 50 dry tons per acre per year) to reclaim land (landfills, strip mined land, gravel pits, for example.).

According to NYSDEC, application of the regulations to Category 1 and 2 projects is virtually indentical. A Category 3 project has never been approved, and probably would not be unless it could be demonstrated that the leachate generated would not contravene groundwater standards (see 6 NYCRR Part 360.8 (a) (3)). In general, sludge applications exceeding the nitrogen needs of the crop grown will not be approved.

Land Application Program Approval

A NYSDEC Part 360 permit must be obtained prior to commencing a land application program. Application for this permit is initiated in the following manner:

1. Engineering plans and reports must be submitted, including:

    a. Location of the disposal sites on USGS topographical maps (1:24,000).

    b. Topographical map of the disposal area (200 feet/inch, two feet contour lines).

    c. Other required information:

        Location of surface water, wetlands and the 100 year flood elevation

        Location of the groundwater table as determined using wells or test pits

        Soil survey mapping units

        Surface drainage patterns

        Location of potable well(s) or supply(ies) within 2,000 feet of the site

        Location of residences or businesses within 2,000 feet of the site

        Location of access and approach roads

        Location of on-site roads

        Location of property boundaries

        Location of fencing

        Direction of prevailing winds

        Location of drainage swale(s)

Location of vegetative cover, large trees, brush, pasture and structures

For Category 3 projects, show location of proposed monitoring wells, surface water sampling stations and soil sampling sites

For all sites, on-site soil sampling data to yield background levels of metals and PCBs

2. Prior to implementating a land application project, a six to 12 month monitoring program of sludge quality is desirable. This requires at least two, or preferably three, samples at a small plant (less than 1 million gallons per day) and up to six samples from a large plant (greater than 5 million gallons per day). If any substance exceeds limits, an identification and abatement program similar to an industrial pretreatment program should be initiated. In any case, the sludge must meet the quality guidelines set forth in the regulations.

Storage Regulations

NYSDEC regulates sludge storage facilities under 6NYCRR Part 360 "Surface Impoundments" and under the "Solid Waste Facility Management Guidelines" Section 7 (g). The following is a summary of these regulations:

Storage lagoons must be constructed to hold wastes that cannot be placed on land during certain periods of the year. (A lagoon is a shallow basin formed by a depression in the earth).

Storage can also be in concrete or steel tanks. If located at sewage treatment plants (STP) storage facilities are exempt from Part 360. If not at the STP, a leak detection or groundwater monitoring system is reqiured.

A distance of at least 500 feet must be maintained between the lagoon and the nearest non-owner residence or place of public assembly.

At least two lagoons of six months storage capacity are required (one year is desirable).

Lagoons must be two to six feet deep.

Lagoons must maintain a minimum of two feet of freeboard (the distance from the liquid's surface to the top of the lagoon).

Lagoons must be constructed above the 100 year flood level.

The bottom of the lagoon must be a minimum of five feet above the seasonal high groundwater elevation.

A natural or artificial membrane must be constructed to provide hydraulic conductivity to 10^{-7} centimeters (cm) per second or less, not to be damaged during cleaning. (Hydraulic conductivity is the ability of a substance to conduct or permit the passage of liquids, similar to permeability).

The lagoon must be properly fenced.

Appropriate insect control measures must be practiced.

The lagoon is to be emptied and cleaned at least every six months.

Drainage to surface waters is subject to Article 17 of the Environmental Conservation Law.

If the berm (curb or wall, usually earthen) elevation is higher than the surrounding ground elevation, a spill prevention control and countermeasure plan is to be submitted for approval.

The lagoon must not violate ambient air quality standards and must minimize objectionable odors at the property line.

Groundwater monitoring or a leak detection system will be required.

Landfill

Present Situtation

Currently, the 20 percent solids concentration and the stabilization requirements in the solid waste regulations are being examined by NYSDEC as it reviews currently operating landfills. Increased enforcement of criteria will only exacerbate operational deficiencies at present sites. Where dewatering capability exists at sewage treatment plants, and the solids concentrations approach 20 percent, NYSDEC might conditionally allow landfilling at existing sites. Where an STP has been constructed without the inclusion of an approved stabilization method and no other feasible disposal alternative is available, disposal of sludge is presently being tolerated. Note that this is not true for land application; criteria must be followed for this option. Several factors could alter this situation:

1. Change in NYSDEC policy or regulations

2. Plans for STP facility upgrade by the municipalities could result in the inclusion of an approved stabilization and dewatering process before NYSDEC will give approval

3. The future availability of a feasible disposal alternative.

Most municipal or private landfills currently operating within the region do not have permits. As these facilities were constructed prior to the promulgation of Part 360, they lack significant environmental safeguards required by the regulations. Present NYSDEC policy requires that one of two conditions be satisfied for any landfill to continue operating after July 1, 1986:

1. The facility must be in complete compliance with Part 360 and receive a valid permit

2. The facility must be operating under a NYSDEC consent order with a schedule of compliance to achieve full permit status.

Facilities which do not meet either of the above conditions will be closed. NYSDEC's current regulatory direction is obviously toward full compliance in a situation where, for most regional landfill operations, compliance means a substantial economic and engineering commitment.

Future Policy

NYSDEC's present policy prohibits new and horizontal expansions of landfills over primary and principal aquifers identified in the Upstate Groundwater Management Plan. The agency is strongly encouraging applicants to do a hydrogeologic assessment before beginning any landfill project. NYSDEC is moving toward requiring a double liner and monitoring, collection and treatment facilities for all landfills, similar to the requirements for secure landburial facilities. The agency presently reviews each landfill application individually and grants permits on a case-by-case basis. It is, however, more difficult now than ever to qualify for a permit.

Composting

Present Situation

Compost use in New York State is strictly regulated by the New York State Department of Environmental Conservation through 6NYCRR Part 360, "Solid Waste Management Facilities".

Basically, the regulations control the production of compost based on the final useage of the material. There are two categories of useage:

Case I - compost is made available to the general public and the final user receives the compost at the STP or from an intermediate distributor.

Case II - compost is intended for use on dedicated or publically-owned land.

NYSDEC requires a Part 360 permit to operate a composting facility in New York State. The permit conditions for Case I are:

1. The composting process must be operated and maintained so it meets the requirements for a process to further reduce pathogens (PFRP) as defined by 40CFR Part 257 (see Appendix F).

2. The final composted sewage sludge must be monitored immediately following the process to further reduce pathogens. The sampling should be done as follows:

Parameter	Production Compost to be Distributed (dry tons/day)	Number of Grab Samples to Make Composite	Frequency of Analysis
Heavy Metals (Cd, Total Cr, Cu, Hg, Ni, Pb, and Zn)*	<1	1 per month	2 per year
	1 to 10	1 per month	1 per month
	>10	3 per week	1 per week
PCBs	<1	1 per year	1 per year
	1 to 10	1 per month	2 per year
	>10	1 per month	2 per year

> = greater than
< = less than

* Cd - Cadmium
Cr - Chromium
Cu - Copper
Hg - Mercury
Ni - Nickel
Pb - Lead
Zn - Zinc

3. The facilities must maintain records on the quality data resulting from the above analyses and on operational data (including time, temperature, and volatile solids reduction data) on the composting operation.

4. The maximum contaminant concentration of the composted sewage sludge must not exceed the following levels on a dry weight basis:

cadmium	10 mg/kg*
lead	250 mg/kg
PCBs	1 mg/kg

Chromium, Copper, Mercury, Nickel and Zinc as shown in Table 45.

* mg/kg = milligrams/kilogram

5. The following information must be made available to the final user either through labeling, through signs posted at the site where composted sludge is made available to the general public, or by leaflets intended for distribution to the final user:

a. The material is a composted sewage sludge composted by a process to further reduce pathogens (PFRP) as described in USEPA regulations 40 CFR Part 257.

b. The compost should not be used on home gardens, but is recommended for lawns or other landscaping uses where the soil will not be used for growing vegetables.

In addition to the above, the following conditions should be observed by large compost producers (i.e., more than 300 dry tons of compost per year) under Case I:

a. The permittee must keep records of deliveries to final users of more than 100 dry tons of compost per year. Records must include the name of the final user, the site to which the delivery was made and the address of the final user. These records must be available for inspection on request.

b. The permittee must record the name and address of any party who obtains more than 30 cubic yards of compost at one time from the composting site. These records must be available for inspection on request.

The conditions to compost sludge for use under Case II include:

a. The compost must not be made available to the general public.

b. The compost must be used for a specific purpose, including publicly owned lands dedicated to non-agricultural purposes such as a golf course, industrial park, rights-of-way, land reclamation, to establish final vegetative cover on a landfill, or other similar non-agricultural purposes.

c. Sludge, to be composted, must be sampled and monitored according to procedures outlined in Section i of the NYSDEC "Solid Waste Management Facilities Guidelines" on land application (Section 7.1). Sludges are considered to be suitable for composting if their pollutant concentrations do not exceed the values shown in Table 45.

Other considerations may be required but need not be more restrictive than those specified in Section 7.1 of the Guidelines. These conditions would control composting site separation distances, application practices, application rates and other site monitoring if appropriate.

Future Policy

Presently, regulations governing composting are not very detailed. NYSDEC is planning revisions which will include more explicit information about requirements for compliance. The agency is especially concerned about requiring procedures to follow the federal Process to Further Reduce Pathogens (Appendix F), to ensure that the sludge does not pose a health hazard.

Ocean Disposal

Present Situation

USEPA presently allows nine municipalities to dispose in the ocean: New York City, Westchester County and Nassau County in New York and six municipalities in New Jersey. They are all disposing under court order.

Prior to 1985, ocean dumpers used the 12 mile site in the New York Bight. Last year, USEPA began to move all dumping to the 106 mile site, which expires in 1991 (see Section 3, Ocean Dumping for more information). Each of the nine users are on a negotiated phase-out schedule to be completed by December 1987. Westchester began using the 106 mile site for all its dumping in March 1986; Nassau moved 100 percent of its dumping in June, and New York City and New Jersey are on a stepped schedule.

There have been no new requests for permits with the exception of Boston, which had its application returned as incomplete. Subsequently Boston has decided not to resubmit its application. Boston's original application was for three years--1988 to 1991. The municipality is planning a new secondary treatment plant to be completed in 1996, but USEPA is not aware of any specific reason for the delay in completing the application.

Future Policy

USEPA has notified all nine ocean dumpers that a permit is now required for use of the 106 mile site. The applicant must, as part of the submission, prove that no other acceptable disposal alternative exists. Should USEPA determine that another option is, in fact, feasible, it will deny the ocean dumping permit. This may force the present users to adopt other waste management alternatives more quickly than anticipated.

USEPA is conducting studies at the 106 mile site to monitor the environmental effects of disposal there. The agency has no firm policy as yet for redesignating the 106 mile site in 1991. Most likely, its evaluation will consider the results of the monitoring studies as well as the availability of alternative options to the present users.

Incineration

Present Situation

All incinerators must comply with federal and state regulations designed to reduce the amount of emissions to the atmosphere. The potential for emissions from an incinerator varies widely, depending on such factors as the characteristics of the sludge, incinerator design, and operating procedures.

Some test data is available which indicates that, on the average, stack gases of uncontrolled sewage sludge incinerators contain about 45 pounds of particulates per ton of sludge burned. Gaseous pollutants that could be released into the atomsphere are sulfur dioxide (SO_2), nitrogen oxides (NO_x), carbon monoxide (CO), and hydrochloric acid (HCL). Sulfur content in sludge is relatively low, less than one percent, and much of the sulfur may be in the form of sulfate which originated in the wastewater. Thus, sulfur dioxide is not expected to be a serious problem. Sludge incineration temperatures are generally less than 1500°F which are too low to form nitrogen oxides of more than 200 parts per million (ppm). Carbon monoxide is not a problem if the incinerator is properly operated. Hydrochloric acid emissions depend principally on the amount of combustible plastics in the sludge.

Conventional sewage treatment processes do not remove appreciable quantities of heavy metals or synthetic organics in sludge, although it can destroy most synthetic organics with adequate temperature and burning time.

Toxic organic chemicals from pesticides or other organic compounds in the sludge may be released during incineration. Data reported by USEPA indicates that pesticides and organic compounds such as aldrin, dieldrin, chlordane, DDD, DDT and PCB were found in randomly selected raw municipal sludges.

Federal Regulations

USEPA New Source Performance Standards (NSPS), apply to incinerators built or modified after June 11, 1973. Any incinerator which burns wastes consisting of more than 10 percent dry sewage sludge, or sends more than 1000 kilograms (1.12 tons) of sludge to the incinerator per day, is subject to the standard.

Existing facilities which are modified in any way that increases the amount of particulate matter emitted also become subject to the NSPS. A facility is considered to have commenced construction on the date that a continuous program of construction starts, or on the date that a contractual agreement, including economic penalties for cancellation, is signed.

A device must be installed to measure the amount of sludge sent into the incinerator to within five percent accuracy. Access must also be provided for taking grab samples of the sludge. No provision is made in the existing standard for monitoring either particulate emissions through periodic stack testing, or stack opacity,(visual measure of particulate emissions from a stack). (See Appendix H and Appendix I for additional information).

Federal standards for opacity and discharge of particulates from new and modified municipal sludge incinerators are: (1) No more than 0.65 grams per kilogram dry sludge input (1.3 pounds per ton dry sludge input); and (2) less than 20 percent opacity are not subject to the opacity standards.

The federal emission standard for mercury as a hazardous air pollutant resulting from sludge incineration was established in 1975. It limits mercury emission to a maximum of 0.29 pound per hour, (see Appendix J).

State Regulations

NYSDEC controls air contaminant emissions from sludge incineration through 6NYCRR Part 212, General Process Emission Sources, (Appendix K). Part 212 regulates contaminant emissions on the basis of an environmental rating which reflects the potential environmental effects of an emission point on its surroundings. The environmental rating A is assigned for toxic pollutants for which the source emission must be controlled to more than 99 percent. The environmental ratings B or C are generally assigned for nontoxic particulates. The emission limit is 0.05 grains per dry standard cubic foot.

6NYCRR Part 219, Incinerators, or 6NYCRR Part 222, Incinerators - New York City, Nassau and Westchester Counties must be observed for co-incineration of refuse and sludge in those locations (see Appendix L and Appendix M).

Appendix N is the latest NYSDEC Municipal Solid Waste Incineration Revised Draft Operating Requirements dated June 20, 1986. These draft operating requirements would apply to the co-incineration of municipal solid waste and sludge.

Emission Characterisitics of Combined Sludge and Municipal Refuse Incineration

Very little data is available on the particulate emission characteristics of co-incineration facilities. On the basis of data which is available, no overall generalizations can be drawn as to the impact that combined burning has on emissions compared to incineration of the wastes separately. However, given the wide variability in both the types of technologies available for co-incineration and the control devices used with these technologies, as well as the differences in the types of wastes burned, it is doubtful that emissions will show similar charcteristics. This topic requires further investigation during the planning of a co-incineration facility.

Control Technologies Used

While wet scrubbers are normally used on sewage sludge incinerators, a variety of different control systems are currently being used on refuse incinerators. Of the approximately 45 municipal refuse incinerators currently operating in the U.S., about 23 are equipped with electrostatic precipitators (ESP), 15 use wet scrubbers, baghouses are in use at two plants, and the rest are control devices. Each of the three co-incineration facilities expected to be operating in 1985 are equipped with ESPs.

Emission Test Data

Emissions tests were performed in 1977 on the multiple hearth sludge incinerator located at the Central Contra Costa Sewage Treatment Plant in California. The incinerator was modified to burn prepared municipal refuse and sewage sludge. Provisions were made to operate the unit in either an incineration or pyrolysis mode. Both the relative amounts of refuse derived fuel (RDF) and sewage sludge entering the furnace, as well as the location at which the wastes entered the furnace, were varied during the test program. Particulate emissions were measured at both the inlet and the outlet of the afterburner. Although the incinerator is equipped with a scrubber, no sampling was conducted on the scrubber inlet.

The results of these tests are summarized in Table 47. The individual runs have been grouped according to the ratio of refuse to sludge burned during the test. There is no apparent difference in the uncontrolled emission rate of incineration as opposed to pyrolysis, although the emissions from pyrolysis are controlled somewhat better by the afterburner. This is most likely a function of the difference in the average size of the particles leaving the furnace, which were generally larger when it was operated in the pyrolysis mode. No emissions tests were performed on the furnace when it was incinerating sludge alone.

Although particulate emissions appear to decline as the ratio of RDF to sludge declines, this trend could also be a function of how the sludge is charged into the incinerator. The uncontrolled rate of particulate release is generally higher when the sludge is charged separately into the top hearth (runs 8C, 8D, 19 H, and 31 P). In the other runs the sludge was first blended with the RDF before it entered the top of the incinerator.

Two sets of emission data were obtained for refuse incinerators co-incinerating sludge. The first set is from the Waterbury, Connecticut, facility. This incinerator is a batch-fed, mass burning refuse incinerator with a capacity of about 150 tons per day. The sludge was first flash evaporated and then burned in suspension in the secondary combustion chamber. The ratio of refuse to sludge was approximately 3.5:1. Emissions were controlled by a spray baffle scrubber. The Waterbury unit was not tested in accordance with USEPA procedures.

TABLE 47

WASTE FEED RATES AND METHOD DURING TESTS ON CONTRA COSTA MULTIPLE-HEARTH INCINERATOR

Run Number	Mode[a]	Waste Feed Point: Top Hearth	Waste Feed Point: Third Hearth	Waste Feed Rate (dry): RDF lb/hr	Waste Feed Rate (dry): Sludge lb/hr	Waste Feed Rate (dry): Total lb/h	Ratio RDF/Sludge
5A	I	Blended	-	595	521	1116	1.1
8C	I	Sludge	RDF	2282	213	2495	10.7
8D	I	Sludge	RDF	2282	213	2495	10.7
11E	I	-	Blended	438	325	763	1.4
11F	I	-	Blended	438	325	763	1.4
17G	I	Sludge/RDF	RDF	2046	295	2341	6.9
19H	P	Sludge	RDF	2762	288	3050	9.6
19I	P	Sludge	RDF	2762	288	3050	9.6
26I	P	Blended	-	2502	374	2876	6.7
29N	P	Blended	-	1982	510	2492	3.9
31P	P	Sludge	RDF	2563	438	3001	5.9

[a] I = Incineration; P = Pyrolysis

SOURCE: "Second Review of Standards of Performance for Sewage Sludge Incinerators", EPA-450/3-84-010, March 1984

A Consumat modular refuse incinerator was tested while coincinerating sewage sludge. The sludge was first dried in an indirect steam dryer to a 20 to 25 percent moisture content. The dried sludge was not mixed with the refuse, but rather dumped into the hopper on top of the refuse. Approxmately equal portions of sludge and refuse were burned. The incinerator is not equipped with a scrubber. Afterburners are employed to control particulate and odorous emissions.

The data from these two tests is displayed in Figures 34 and 35. For the Watebury facility, no difference can be discerned between the controlled particulate emissions when refuse is burned separately in contrast to combined incineration. There is, however, a noticable increase in the emissions from the Consumat incinerator when dried sludge is burned, over that observed for refuse alone.

Regulatory Issues

As mentioned earlier, there is currently no New Source Performance Standard (NSPS) that applies explicity to co-incineration. In the few cases where new facilities subject to NSPS have been built, the emission limit has been determined on an ad hoc basis. Table 48 shows the procedure that has been employed in making these determinations.

There are a number of inconsistencies in this procedure. First, there exists a discontinuity when an incinerator is burning 50 percent municipal waste and 50 percent sludge. Also, the separate standards are not expressed in the same units; the conversion from a concentration-based to a mass-based standard is not always straightforward.

Additional gaps in the coverage of existing regulations are also apparent. For example, neither federal regulations Subpart E nor Subpart O addresses the applicability of the standard when an incinerator is operated in a pyrolysis mode. In at least one instance, a planned solid waste pyrolysis project was exempted from the NSPS on this basis.

The fact that the existing NSPS for refuse incinerators has a minimum size cutoff (50 tons per day), while no cutoff is given for sludge furnaces, raises a number of questions in terms of the equity of the current procedure for applying the Subparts. For example, a large 250 tons per day refuse incinerator burning 75 tons per day of sludge would have to meet a less stringent standard than 45 tons per day incinerator buring five tons per day sludge.

Finally, in some instances, it is not clear whether the present contribution of sludge to the total incinerator charge rate is to be calculated on a wet or dry basis.

Because of the lack of sufficient emission data, the difference between alternative co-incineration techniques, and the difference between the two standards, it is not possible to resolve these issues in this study.

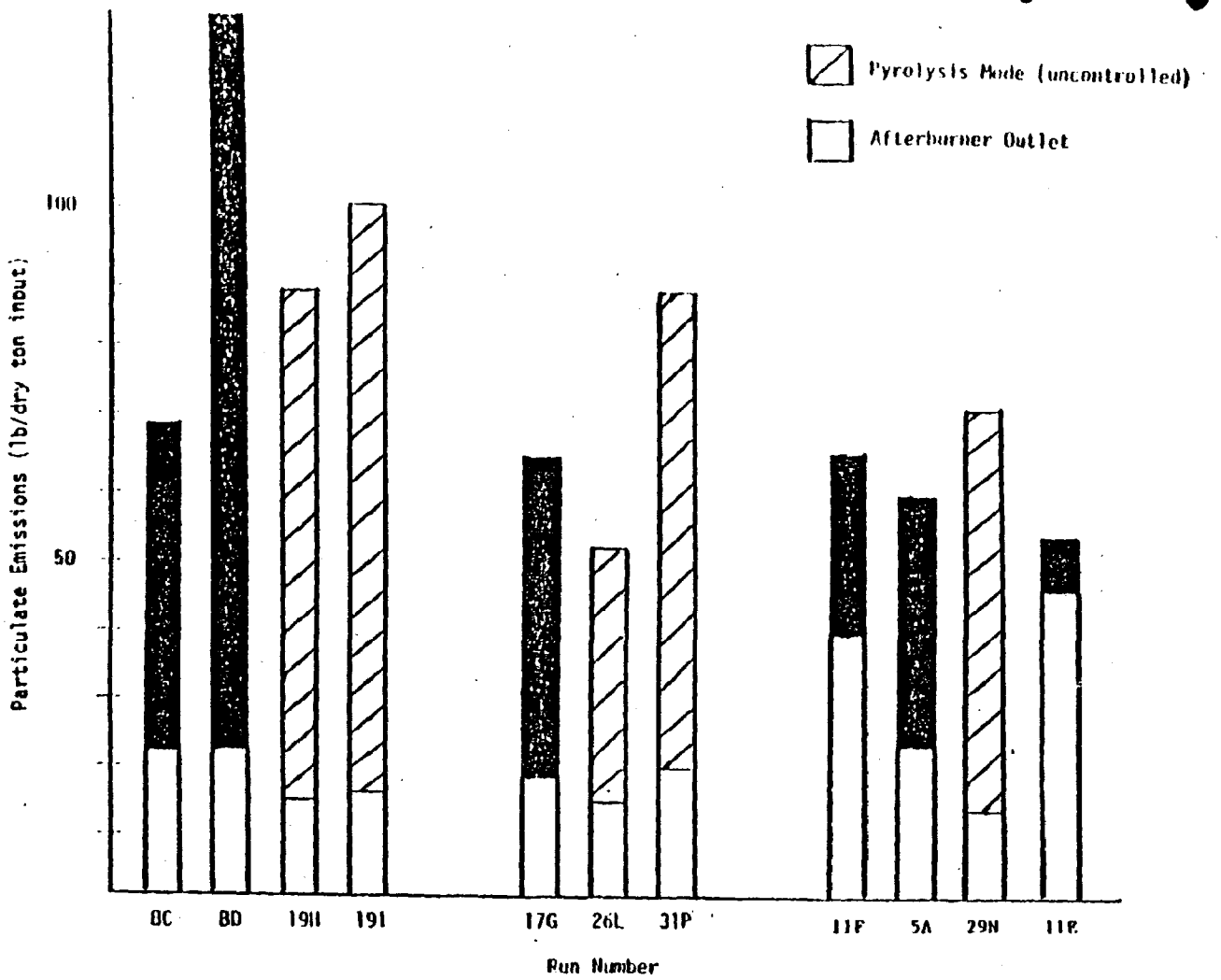

FIGURE 34

Summary of Emissions Tests on the Contra Costa Multiple-hearth Incinerator

SOURCE: "Second Review of Standards of Performance for Sewaage Incinerators", EPA-450/3-84-010, March 1984

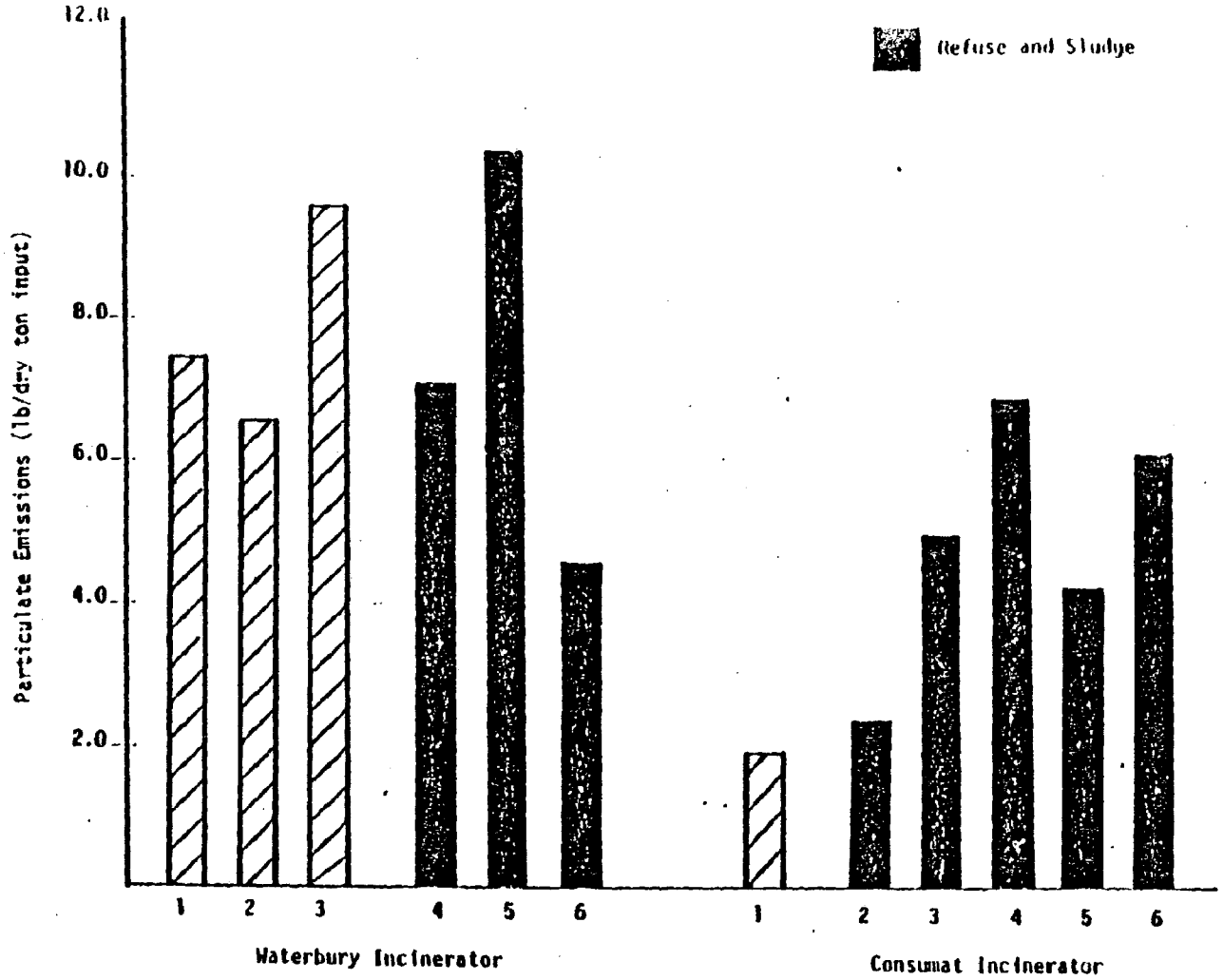

FIGURE 35

Summary of Particulate Emissions from Two Municipal Refuse Incinerators.

SOURCE: "Second Review of Standards of Performance for Sewage Sludge Incinerations", EPA-450/3-84-010, March 1984

TABLE 48

CURRENT BASIS FOR DETERMINING THE APPLICABILITY OF THE NSPS TO INCINERATORS

Sewage Sludge (Percent)	Municipal Refuse (Percent)	Incinerator Charging Rate (tons/day)	Applicable[a] Subpart
100	0	any rate	Subpart O
51 - 100	0 - 49	> 50 total waste	Prorated, O/E[b]
0 - 50	50 - 100	> 50 total waste	Subpart E
0	100	< 50 municipal refuse	None
1 - 99	1 - 99	< 50 total wastes, > 1.1 sewage sludge	Subpart O
11 - 99	1 - 89	< 50 total wastes, ≤ 1.1 sewage sludge	Subpart O
0 - 10	90 - 100	< 50 total wastes, ≤ 1.1 sewage sludge	None

[a] Subpart O: 1.3 lb particulate/dry ton sludge input; Subpart E: 0.08 grains/dry standard cubic foot flue gas

[b] DSSE determination (E-7), May 17, 1976, allows a prorated standard based on the percentage of each waste consumed.

SOURCE: "Second Review of Standards of Performance for Sewage Sludge Incinerators", EPA-450/3-84-010, March 1984

NSPS Applied to Former, Existing, and Planned Co-incineration Facilities

Various determinations have been made in the past as to which NSPS should apply to co-incineration. Of the facilities that were formerly co-incinerating, only the Holyoke, Massachusetts, and Duluth, Minnesota incinerators were subject to the NSPS. In both instances, the incinerators were required to meet either the most stringent applicable NSPS (Subpart O), or to meet an emission limited based on a proration of the two applicable subparts in a manner acceptable to USEPA.

Each of the three co-incineration projects expected to be operating over the next five years will be required to meet different emission limits. The planned co-incineration facility in Harrisburg, Pennsylvania, is considered an existing facility, and will not be subject to the NSPS. The incinerator will remain subject only to the state emission limit for existing municipal incinerators. An emissions test will be performed, however, once the incinerator begins to burn sludge.

Although the incinerators in Stamford, Connecticut, were built in 1975, and therefore are subject to the NSPS, the emission limit currently applied to the facility is the state emission limit for existing sources of 0.4 pounds particulate per 1,000 pounds flue gas. Emissions tests are currently being planned, however, to determine which subpart of the NSPS applies to the incinerator.

Subpart E was applied to the Glen Cove, New York co-incineration facility. A test program is currently underway and a final determination will be made at the conclusion of these tests.

Future Policy

NYSDEC's main concern is concentrations of heavy metals in the sludge. A significant controversy between NYSDEC and the developer of the Glen Cove, Long Island co-disposal plant over heavy metals concentrations delayed the permit process by over a year. The New York State Department of Health, with NYSDEC's support, is presently developing risk assessments for heavy metals concentrations.

The complexities involved in operating a co-incineration facility makes prediction of emission characteristics difficult because of the potential for inconsistent burning conditions. In view of this, obtaining a NYSDEC permit may be an arduous and expensive process which may not result in a permit at the end.

According to NYSDEC officials, local governments that want to co-incinerate sludge and refuse, prefer to get the refuse incinerator on line first and then use it for co-disposal.

SECTION 5. SITING SLUDGE MANAGEMENT FACILITIES

Acquiring Land

Land may be needed to implement regional or inter-county sludge management solutions. If public land is not available, a parcel or parcels will have to be acquired. Availability of public land should be investigated before looking at private lands to save the extensive costs and time involved with acquisition.

Should it be necessary to purchase private land, the most cost effective means of doing so is through negotiation based on current fair market value established by two or more independent appraisers. A reasonable time, perhaps one year, should be allowed for land negotiation and acquisition. In the event that negotiation fails, the land may be acquired through condemnation pursuant to the Eminent Domain Procedure Law.

The power of eminent domain is specifically reserved to a level of government only within the jurisdiction of that level of government, i.e. a county can condemn land only within the county. If a multi-county authority were to operate a regional facility, it would need acquisition capability in its statute.

A summary of the procedure for condemnation of land is provided in Appendix O.

Cost of Acquiring Land

Acquisition costs include land, appraisals, legal counsel (condemnation will increase this cost substantially), filing fees and costs of notices and hearings.

Facility Siting Criteria

General criteria for the siting and design of a proposed sludge management facility are provided in state solid waste regulations (6NYCRR Part 360) which detail construction, design and closure requirements applicable to any landfill. NYSDEC regulations contain requirements applicable to sludge incinerators. All these regulatory measures contain constraints that preclude locating a sludge management facility in areas considered to be unique or sensitive. Adherence to the provisions of these regulations and other pertinent criteria should ensure that the sludge management facility is not a source of environmental pollution. Some constraints listed in Table 50 exclude particular areas from consideration, significantly reducing the number of potential locations that may be considered.

TABLE 49

SLUDGE MANAGEMENT FACILITY SITING CONSTRAINTS
Applicable only to Landfill and Thermal Reduction

Siting Consideration	Constraint	Basis
Hydrogeologic Zones	Not over a principal aquifer	NYSDEC Policy
Floodplains	Prohibited	6NYCRR Part 360
Freshwater Wetlands	Prohibited	6NYCRR Part 360
Agricultural Soils (Class 1 and 2 Soils)	Prohibited	6NYCRR Part 360
Depth to Groundwater	More than five feet	6NYCRR Part 360
Airports	Not within 5,000 feet for piston-powered aircraft only. Not within 10,000 ft. for turbojets	6NYCRR Part 360
Endangered Species	Damage to species or critical habitats prohibited	6NYCRR Part 360
Coastal Areas	Must be consistent with existing use	NYSDOS* Coastal Management Program
Wild, Scenic and Recreational River Corridors	Development generally prohibited	Environmental Conservation Law

* New York State Department of State

Other constraints may be considered at the local level, such as establishing minimum distances from parks, schools, hospitals or nursing homes; locating on a federal or state superfund site; siting so as to avoid damage to archaeological or historic sites or significant habitats, and use of land already developed or dedicated for specific purposes.

Size of Sludge Facilities

The size of the sludge management facility is of primary importance in both the siting and impact analysis of the proposed facility. Each facility should be planned for a 20 year operating life.

The size of a landfill for sludge depends on several factors including which counties, towns, and cities will use it and the projected waste stream quantities for the next 20 years for each participant.

Due to the large number of factors that may affect the amount of sludge received at a proposed facility, no single projection of required site acreage could be developed for this study. This kind of evaluation would have to be done, when specific disposal locations are contemplated.

Site Selection Process

Site selection proceeds by progressively applying siting constraints and criteria in stages (screens) to methodically determine the most suitable potential sites. This screening procedure is designed so that at each stage only areas not eliminated in the previous stage are considered further. To make the process as efficient as possible, each subsequent screen requires a more detailed evaluation than the preceding one.

Screen One

In the first phase, analysis maps are used. Siting constraints are overlain on the maps. Areas which are excluded from further consideration due to regulatory and technical considerations can then be identified.

Screen Two

At this stage, the eligibility of a potential site depends on a number of criteria including environmental, health, technical, institutional, social and cultural concerns.

Both the size and extent of impacts, as well as the ease of development will be determined by these features. One convenient way to directly apply these criteria to potential sites is through the use of an evaluation matrix as contained in Figure 36. The matrix compares the relative strengths and weaknesses of different sites. To use the matrix, each environmental feature is rated based on the extent to which it contributes to or facilitates site development. A relative weight is assigned to each siting consideration. The percentage of weight for each siting factor is then assigned, with each siting consideration category totalling 100 percent.

The entries in the matrix, then, are the rating values, usually on a scale of 1 (poor) to 3 (good). Such an evaluation matrix provides a convenient overview of the strong and weak features of each potential sludge management facility site. The ratings for each category are totalled in an attempt to eliminate the poorer sites from further consideration and to identify sites that appear to be favorable.

SLUDGE MANAGEMENT FACILITY
SITE EVALUATION MATRIX

Rating:

1- Closely conforms to desirable site conditions.
2- Site has problems conforming to desirable site conditions.
3- Site is undesirable.

Site Name:

Site Location:

Siting Consideration	Criteria	% of Siting Consideration Weight	Rating 1, 2, or 3	Siting Criteria Scores	Sum of Criteria Scores	Siting Consideration Weight	Siting Consideration Score
Population Density	Population within 0.5 miles of the site boundary The projected population and the rate of growth for the area within 0.5 miles of the site boundary during the 20 year period following initial site operation						
Population Adjacent to Transport Route	Population for areas within 0.5 miles of anticipated transportation routes. The projected population and the rate of growth for areas within 0.5 miles of the transport routes during the 20 period following initial site operation						

FIGURE 36

SITE EVALUATION MATRIX

Siting Consideration	Criteria	% of Siting Consideration Weight	Rating 1, 2, or 3	Siting Criteria Scores	Sum of Criteria Scores	Siting Consideration Weight	Siting Consideration Score
Contamination of Ground and Surface Waters	Ground and surface water aspects Runoff Hydrogeological characteristics						
Water Supply Sources	Relationship to water supply sources						
Air Quality	Atmospheric stability Prevailing wind direction Wind speed						
Areas of Mineral Exploitation	Risk of subsidence						
Preservation of Endangered, Threatened and Indigenous Species	Developmental and operational impacts on endangered, threatened and indigenous species or critical habitat						
Conservation of Historic and Cultural Resources	Proximity to historical or cultural resources						

Siting Consideration	Criteria	% of Siting Consideration Weight	Rating 1, 2, or 3	Siting Criteria Scores	Sum of Criteria Scores	Siting Consideration Weight	Siting Consideration Score
Noise Quality	Prevailing Wind Direction Wind Speed Construction Impacts Operational Impacts						
Leachate Control & Treatment	Proximity to Large Body of Water Proximity to Stream Impact of Off-Site Treatment						
Topography of Site	Flat Terrain Hilly Terrain Depressed Terrain						
Proximity to Groundwater	Greater than 25' 20 to 25' 10 to 20' 5 to 10'						

SITE EVALUATION MATRIX

Siting Consideration	Criteria	% of Siting Consideration Weight	Rating 1, 2, or 3	Siting Criteria Scores	Sum of Criteria Scores	Siting Consideration Weight	Siting Consideration Score
Open Space, Recreational and Visual Impacts	Proximity to open space and recreational resources Relationship to scenic views or vistas Degree to which proposed facilities are readily noticeable to passersby						
Proximity to Sources of Waste Generation	Proximity of site to Towns with greatest waste generation Consider only Towns which will use Regional site						
Land Ownership Land Use and Zoning	Present Zoning Future Zoning Public Owner Private Owners						
Size of Site	Greater than 400 acres 200-400 acres 100-200 acres 50-100 acres Less than 50 acres						

Siting Consideration	Criteria	% of Siting Consideration Weight	Rating 1, 2, or 3	Siting Criteria Scores	Sum of Criteria Scores	Siting Consideration Weight	Siting Consideration Score
Transportation Assessment	Mode of transportation Accident rate to transport route Structures within 0.5 miles of the transportation route Transportation restrictions Nature and volume of waste being transported						
Proximity to Incompatible Structures	Proximity to airports Proximity to other incompatible structures						
Utility Lines	Proximity to major utility lines						
Municipal Effects	Consistency with the intent of master land use plan Consistency with local laws, ordinances, rules and regulations Public expense/revenue tradeoffs						

Siting a Landfill for the Ash Residual from Incineration

Unless a landfill is already available within the region for disposal of the ash residue from incinerating sludge or sludge and municipal solid waste, one will have to be constructed, or the ash will have to be hauled outside the region.

Some communities are hauling ash to distant landfills at considerable expense. This option may not be available for long, however, as many of these landfills are deciding to retain space for the needs of their surrounding communities.

If an ash landfill (ashfill) must be constructed, the following items should be considered.

Construction

1. If the ashfill is to be located in an area near a sole-source aquifer, double liners are required, each of a different chemical composition (synthetic, or clay liner) with two feet of thickness and synthetic liner separations.

2. A leachate collection system is needed, one system for each liner. A leachate treatment and disposal system is also required.

3. Surface drainage must be provided:

- to prevent any uncontrolled ash from reaching surface waters
- to prevent erosion of landfill surface
- to minimize surface ponding and infiltration of rain water into the various sections of the ashfill.

4. Dust control measures must be instituted to prevent ash from drying and dispersing during transporting or landfilling, and becoming a nuisance or a health hazard.

5. Adequate separation of the facility from any natural surface waters must be maintained.

Monitoring

1. Groundwater monitoring wells should be installed on site.

2. Baseline (existing water quality) conditions for both surface and groundwater at the site should be established through testing prior to operation of the ashfill.

3. Water monitoring should be done periodically.

Operation

1. Cover and compaction needs, including daily, 30 day, and final cover requirements must be planned.

2. Soil cover integrity must be maintained and grass or ground cover established within four months of closure of a waste cell.

Additionally, plans for closing the ashfill must provide for:

a. a closed facility which minimizes surface ponding and infiltration into the ashfill cells, and protects the environment from leachate contamination of ground and surface waters

b. post-closure groundwater and surface water monitoring, maintenance and, if necessary, remediation for five years after closure.

Financial Requirements

1. The owner or operator must post financial guarantees such as pollution liability insurance or performance bonds as security against the cost of remediation and developing alternative water supplies in case of contamination.

2. Financial guarantees must also be provided so that sufficient funds exist to ensure proper operation and maintenance of the leachate collection and treatment system after the ashfill is closed.

This is not an all inclusive list. The costs of implementing these design considerations will vary depending on the actual site selected. They should be reviewed as part of the plans for the recommended site.

Host Community Incentives

Any plan for a new regional, inter-county or intra-county management facility should consider incentives for the community in which the facility will be located (the "host community"). These incentives might be direct payments to the community or might be in the form of improvements and services not otherwise affordable by the host community. Incentives are usually negotiated between the host community and the developer of the facility. With either a regional solution, or one involving several counties, all parties would contribute to the incentives.

Any incentives are specific to the type of facility being developed, the needs of the host community and the developer's and participants' available financial resources. Possible incentives include:

1. An annual payment in lieu of taxes based on the unimproved value of the site at the time of acquisition. A further incentive would be to have the evaluation based on the highest and best use of the land.

2. Additional revenue in the form of a royalty per ton accepted at the facility could be imposed and returned to the host community for either specified purposes (access roads, utilities) or unspecified purposes (parks, redevelopment, new local services). These payments could be adjusted periodically.

3. A post-closure fund could be established for which dedicated monies may be used by the host municipality, if necessary, to make repairs to the closed facility. Post closure is required by NYSDEC regulations for some types of facilities.

4. Infrastructure rehabilitation required as part of the facility's development could be guaranteed by the developer or operator.

5. The host community could be guaranteed future participation in the preparation of all contract documents and agreements related to the planning, design, construction and operation of a regional facility.

6. The host community could be guaranteed participation in any board, committee or legal structure relating to the facility.

7. Property owners within a given radius could be guaranteed fair market value for their property, based on a valuation made prior to the development of the facility, plus an inflation factor based on local real estate values. This offer would be good for a predetermined period from the start of construction. Alternatively, property owners could be compensated for any losses in property values attributable to the facility.

Potential Sites

The sites shown on the maps on the following pages were developed from draft and final planning documents furnished by the seven counties. As the objective of this study was not specific site selection, this siting information is for illustrative purposes only. The siting criteria used for the sites shown here may not necessarily be the same as the criteria required for sludge management facilities. Therefore, these sites may or may not meet all the appropriate siting criteria for sludge management sites. The selection of a final site, or sites, depends on the type of facility to be constructed and the quantity and quality of wastes to be managed.

POTENTIAL SITES

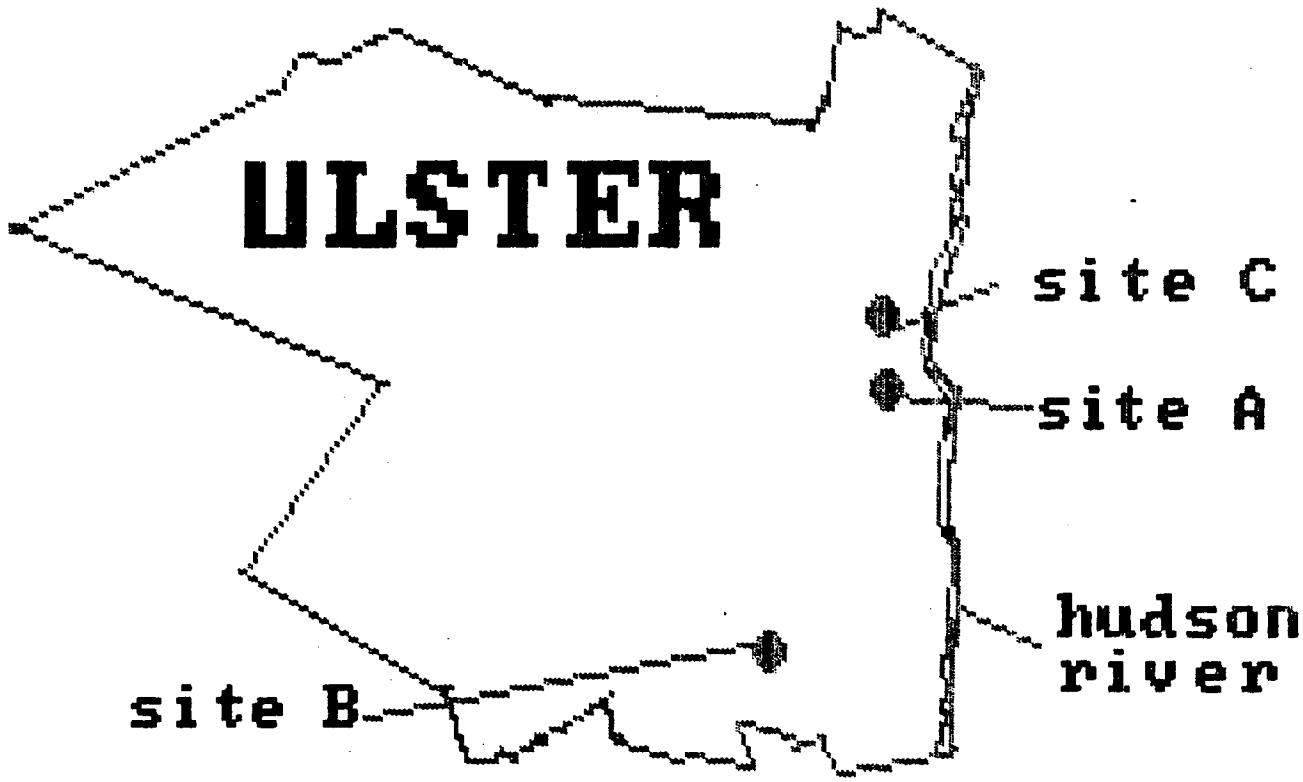

SITE A - Clay pit sites near Kingston.

SITE B - A land area in the northeastern part of the Town of Gardiner.

SITE C - Land areas adjacent to the existing landfills in the Towns of Kingston, Shawangunk and Saugerties.

Source: Solid Waste Management Study for Ulster County, February 1985, by Barton & Loguidice, P.C.

POTENTIAL SITES

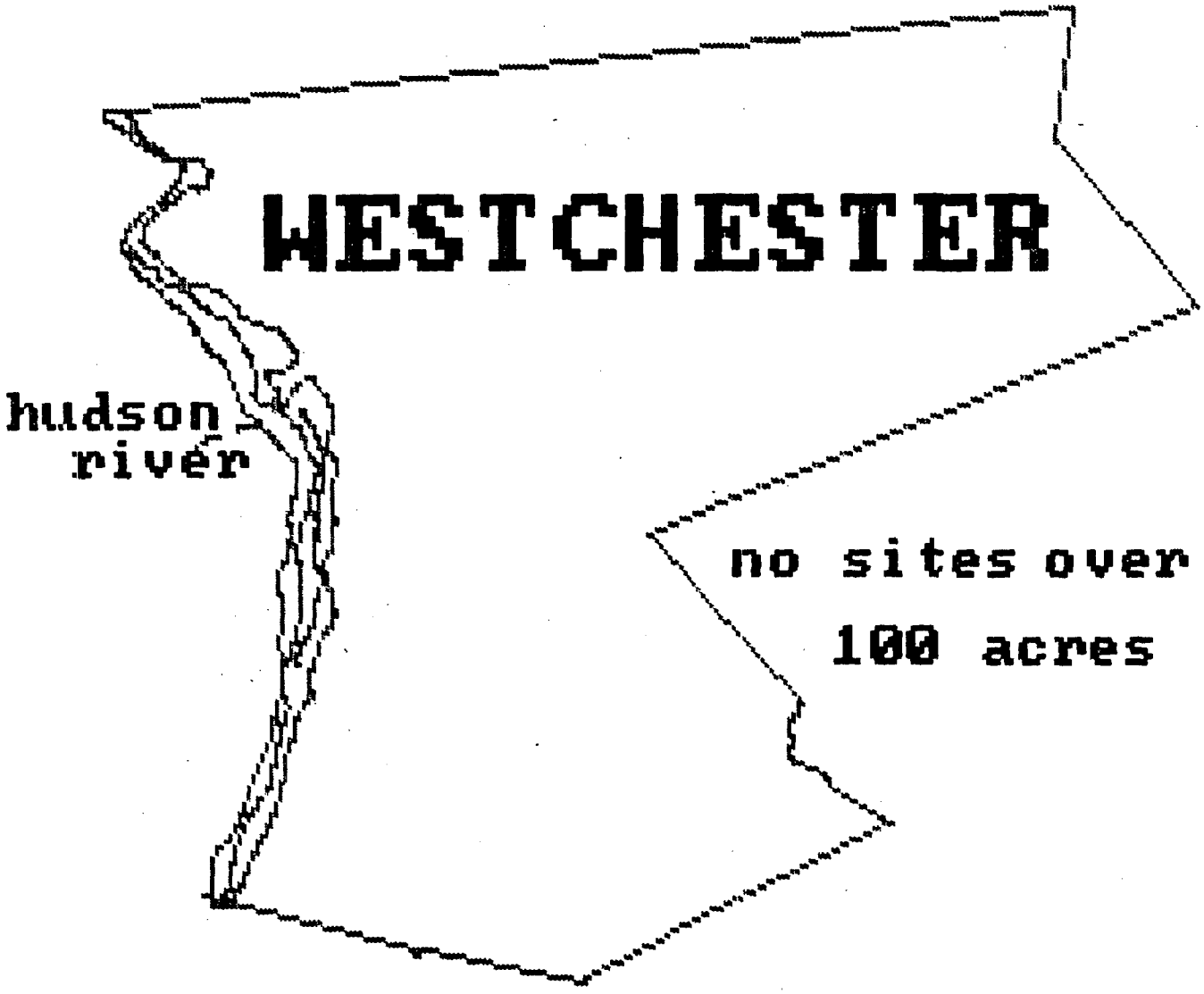

Source: Report on 201 Facilities Planning for Sludge Treatment and Disposal, June 1978, by Greeley and Hansen.

POTENTIAL SITES ORANGE

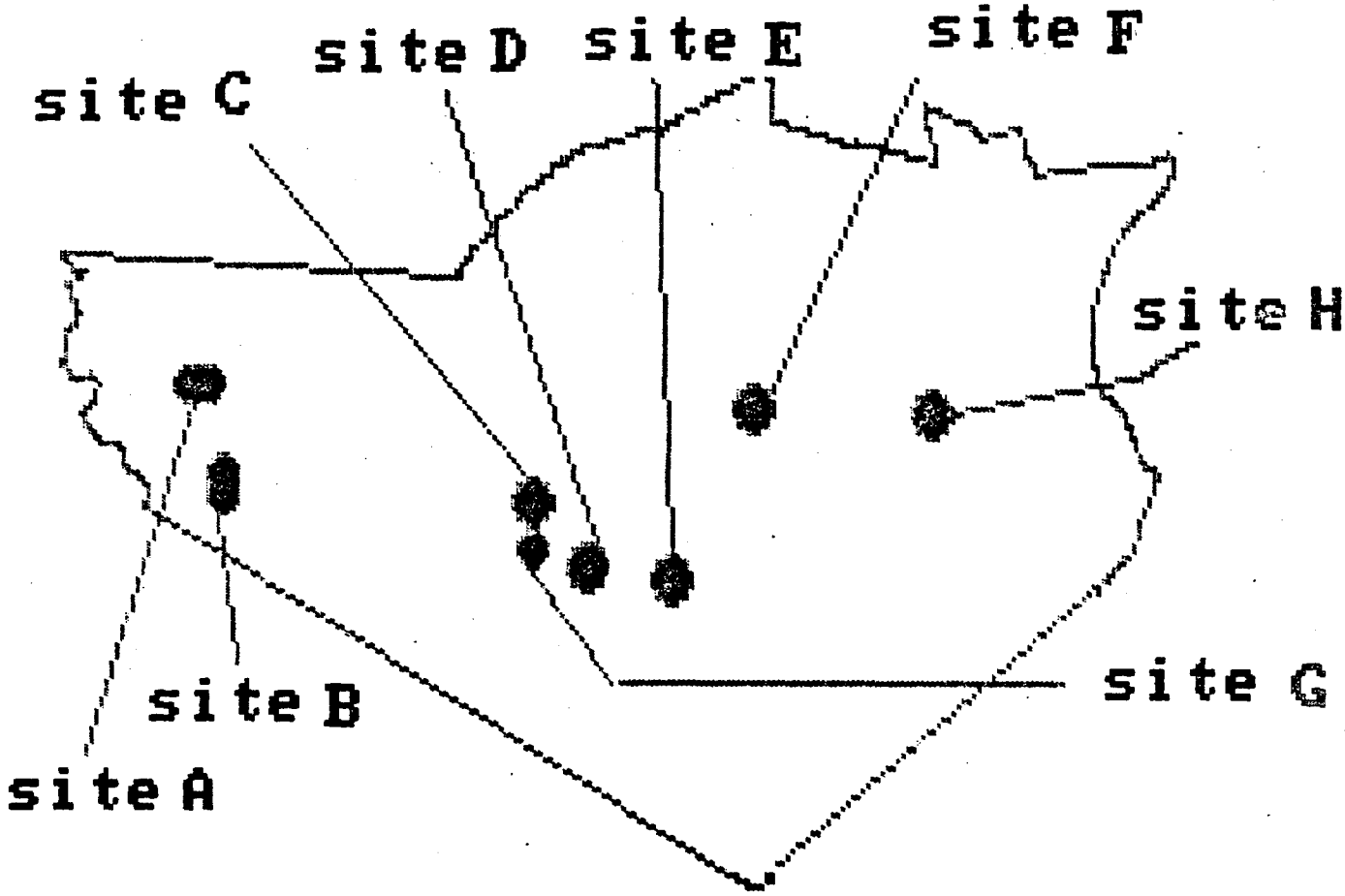

SITE A - A 750-acre area located northeast of the intersection of NYS Route 42 and Peenpeck Road in the Town of Deerpark.

SITE B - A 790-acre site located southwest of the intersection of County Route 22 and Toad Pasture Road in the Town of Minisink.

SITE C - A 650-acre site in the Town of Goshen, bounded by Maple Avenue, Houston Road, NYS Route 17A, County Route 6 and Cross Road.

SITE D - A 590-acre site, south of County Route 66 and west of Johnson Road in the Towns of Goshen and Chester.

SITE E - A 400-acre site east of Tuthill Road and south of NYS Route 208 in the Town of Blooming Grove.

SITE F - A 500-acre site west of East Searsville and Mills Road, and south of Beamer Road in the Town of Montgomery.

SITE G - Existing landfill -- best site accessibility, lowest haul cost and development cost.

SITE H - Stewart Airport -- former Monteco Site.

Source: Draft Alternative Action Study, Orange County Landfill Expansion, August 1985, by O'Brien & Gere Inc.

POTENTIAL SITES

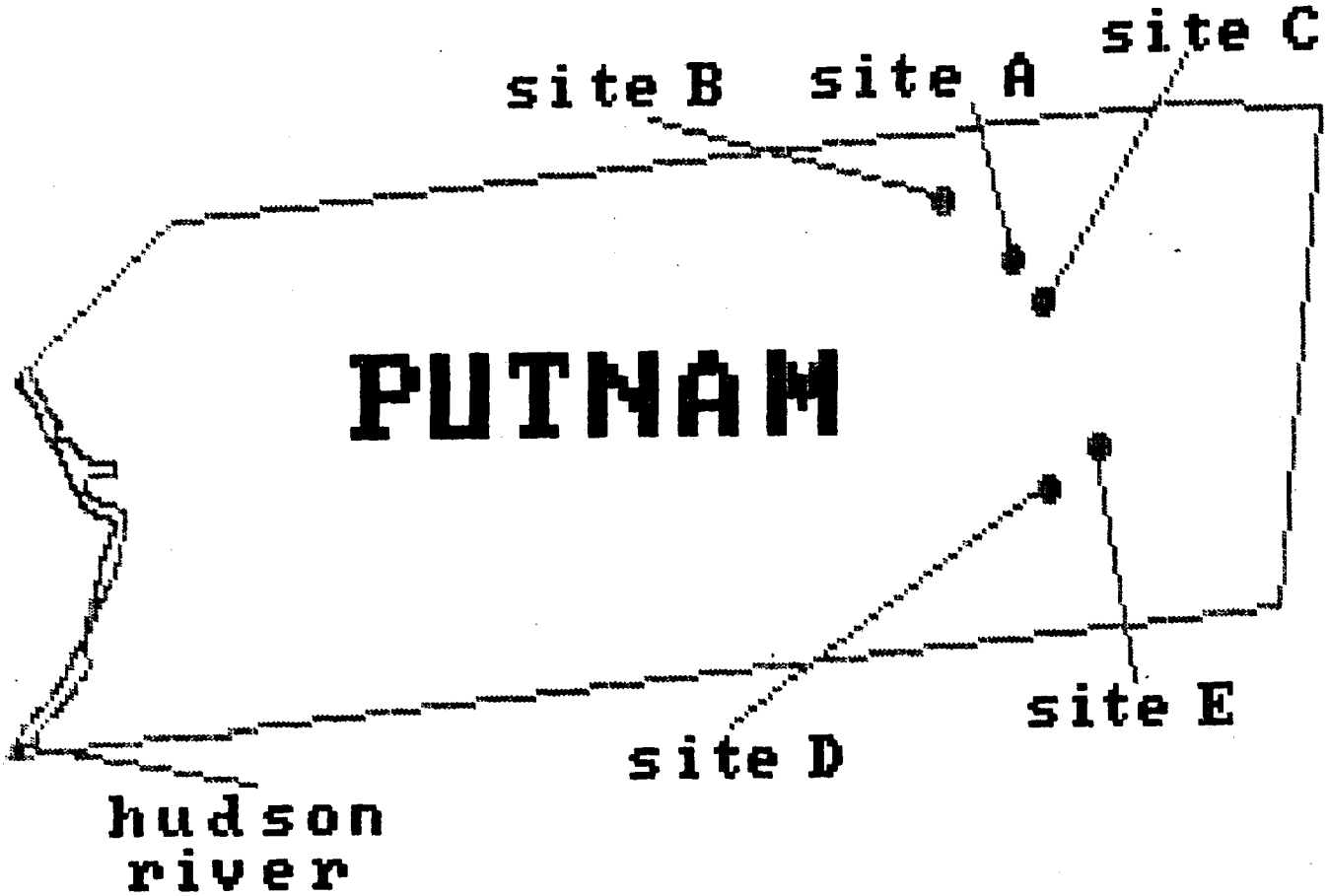

SITE A - A site on Ludingtonville Road, in Kent, adjacent to Interstate 84 at Exit 17.

SITE B - A site in Kent on Ludingtonville Road, to the north of the New York State Department of Transportation Facility.

SITE C - A site in Patterson northeast of Interstate 84 at Exit 18 on the south side of Route 311.

SITE D - A site in Southeast on the south side of Route 312, northeast of Interstate 84 at Exit 19.

SITE E - A site in Southeast on the southeast corner of the intersection of Routes 312 and 6.

Source: Central Fransfer Station Site Evaluation, Phase II Study, May 1985, by Velzy Associates.

POTENTIAL SITES

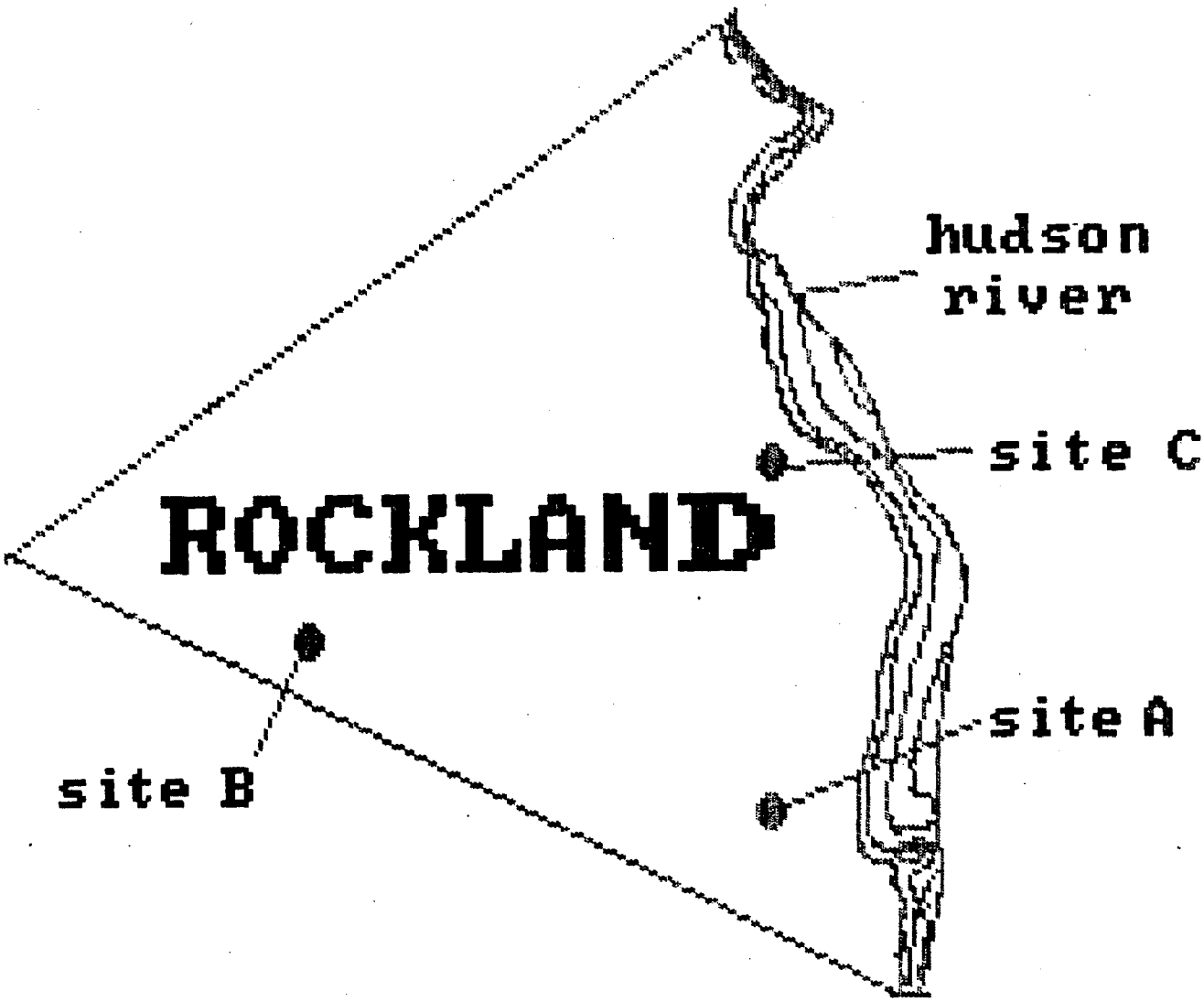

SITE A - Vacant parcel east side of railroad tracks on Rockland County Sewer District No. 1, Orangetown, New York.

SITE B - Vacant parcel adjacent to Ciba Geigy plant in Village of Suffern, Town of Ramapo.

SITE C - Vacant parcel on Tilicon Quarry property north of Long Clove Road, Clarkstown, New York.

Source: Rockland County Sewer District No. 1, Sludge Management Facility Plan Amendment Report, April 1986, by Metcalf & Eddy, Inc.

POTENTIAL SITES

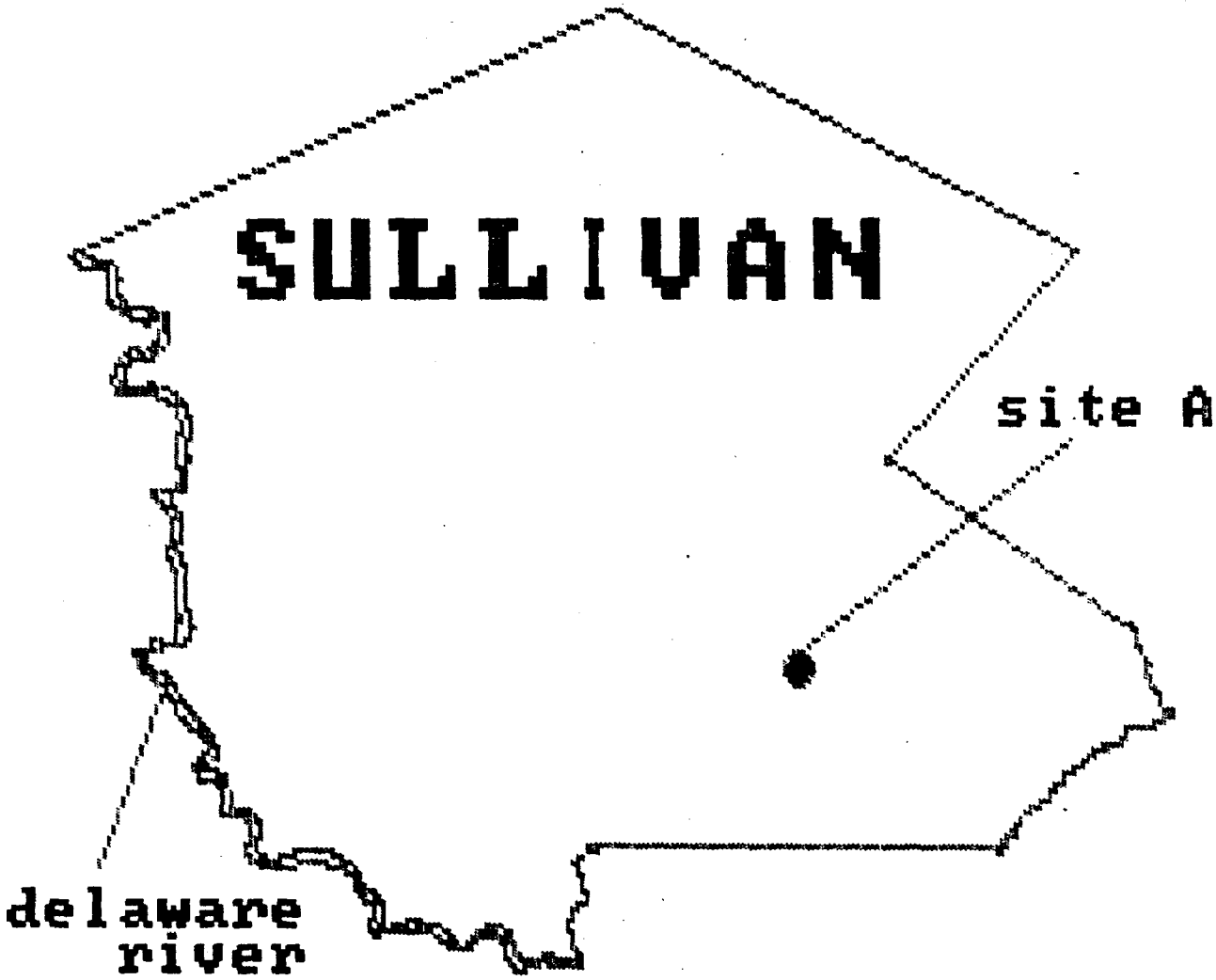

SITE A - Monticello Landfill Site.

No current source of siting information.

POTENTIAL SITES

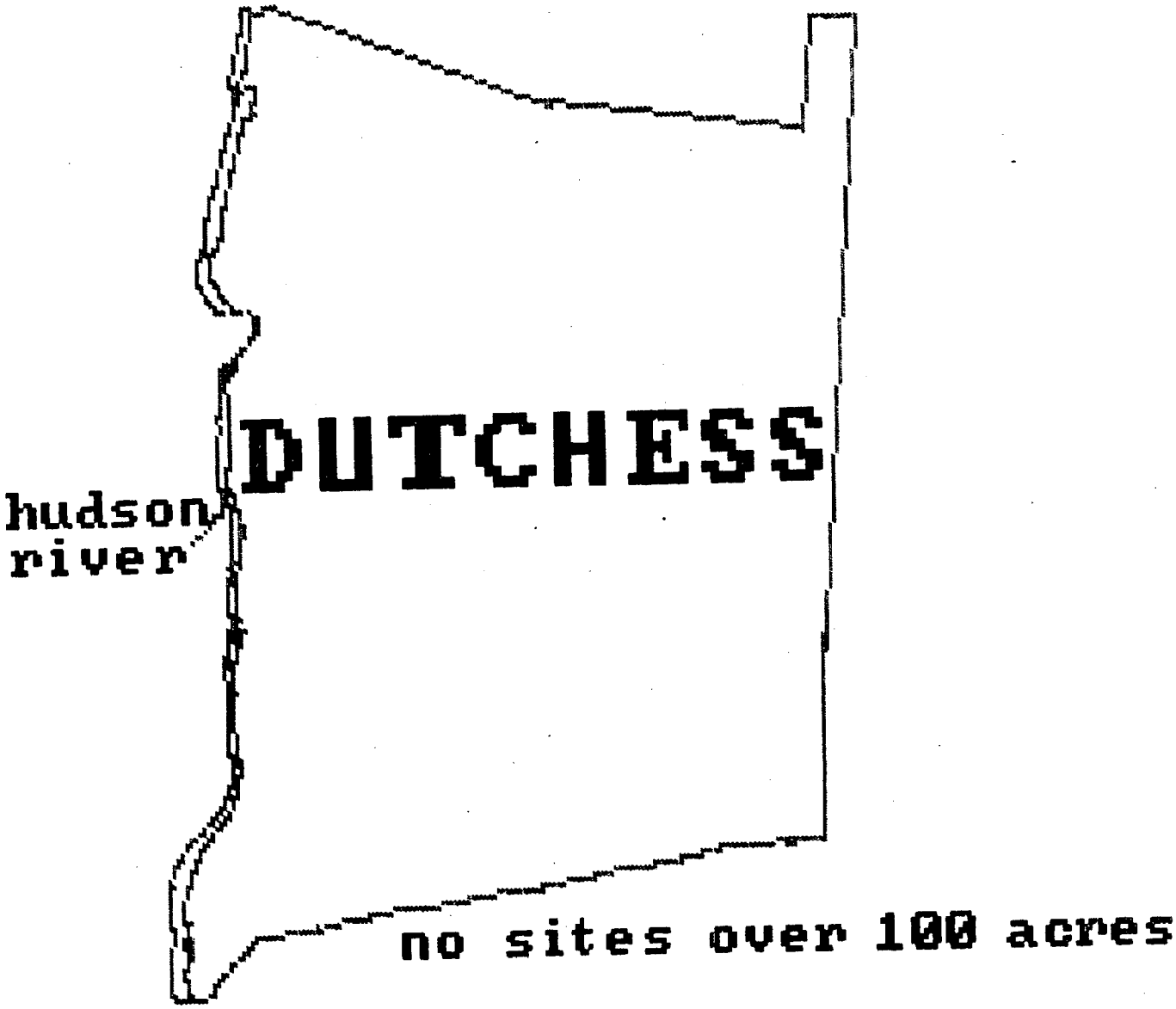

No current source of siting information.

SECTION 6. DEVELOPING, FINANCING AND IMPLEMENTING SLUDGE MANAGEMENT PROJECTS

Introduction

This section presents important considerations for planning sludge projects, exclusive of engineering design. It describes the following:

- procuring services such as design, construction, operation and maintenance and total service contracts
- institutional mechanisms such as local authorities and agencies, state agencies, county districts, intermunicipal agreements, privatization and host community incentives
- financing options
- revenue sources and grants

Procuring Services for Sludge Management Projects

In the development of any project, one of the more difficult tasks is the actual procurement of services. Such services include design, construction, operation and maintenance and total service contracts. This section describes the available mechanisms for procurement which are presented in Table 50.

Procurement Guidelines

Generally three approaches are used to procure professional and technical services for projects:

1. the conventional approach with separate engineering and construction contracts,
2. a turnkey contract where the facility is designed and built by the contractor and turned over to the owner for operation,
3. full service contract by the developer for the design, construction, and operation of the facility.

Bidding Procedures

Competitive selection is the basic requirement for public procurement. A variety of procurement procedures are used by state and local governments:

1. **Competitive Sealed Bidding or Formal Advertising.** An invitation for vendor bids is issued which contains detailed specifications. In evaluating vendor responses, the municipality may use only objective factors to determine that the item or service being offered satisfies the requirements of the notice. Award is made on an objective basis to the lowest responsible bidder.

2. **Competitive Negotiations.** These are generally used for a specific service. Extensive discussions are held with potential contractors to determine the fairness and reasonableness of the negotiations. A competitive sealed proposal is requested through a request for proposal (RFP) procedure. Proposals are then evaluated for compliance with the requirements of the request for proposal and from the standpoint of costs. Often some changes in proposals may be needed to arrive at the final offer. However, all procedures must be in accordance with state and local laws.

3. **Two Step Formal Advertising.** This is used by the federal government where the complexity of the system or service desired precludes the preparation of detailed specifications. In step one, the RFP is issued and unpriced technical proposals are submitted. Discussions are conducted separately with all proposed bidders to ensure mutual understanding which will allow the submission of more responsive answers to the formal request for proposal. In the second step, the notice for the actual project is submitted through an invitation for bids similar to the competitive sealed bidding procedure.

4. **Sole Source Negotiation.** This involves no competition and is used where a particular project is so narrowly described that only one responsible bidder can be anticipated.

There are limitations imposed by law in New York State on all of these procedures. These must be followed to afford the best competitive advantage to the municipality.

Procurement Alternatives

Table 50 summarizes the procedures available to various government entities.

TABLE 50

SUMMARY OF PROCUREMENT PROCEDURES

Procuring Body	Permitted Procurement Procedure(s)	Statutory Authority to Use Procedure
Municipality	Competitive Sealed Bidding	General Municipal Law 103, 120-w
	Request for Proposals	General Municipal Law, 120-w
Local Authority	Competitive Sealed Bidding, Request for Proposals, Special Procedures	General Municipal Law, 120-w, Special Legislation
Industrial Development Authority	All options available to the private sector--essentially, no limitations	Article 18-A of General Municipal Law
County	Competitive Sealed Bidding, Request for Proposals	General Municipal Law 103, 120-w
New York Power Authority	Competitive Sealed Bidding, Competitive Negotiation, Two-Step Formal Advertising, Sole Source Negotiation	Unconsolidated Laws 7178
New York State Environmental Facilities Corporation	Competitive Sealed Bidding, Requests for Proposals	State Finance Law 135, 139-f; Public Authorites Law 1287; General Municipal Law 120-w
New York Power Authority	Competitive Sealed Bidding, Competitive Negotiation, Two-Step Formal Advertising, Sole Source Negotiation	Permitted, but not required by State Finance Law 135
New York State Urban Development Corporation	Competitive Sealed Bidding	State Finance Law 135, UDC Act 6261
New York State Energy Research and Development Authority	Competitive Sealed Bidding, Competitive Negotiation, Two-Step Formal Advertising, Sole Source Negotiation	Public Authorities Law, Section 1850

Institutional Mechanisms for Sludge Management Projects

Introduction

A number of alternative institutional mechanisms are available for local government to build, design, finance and operate sludge management facilities. Individual towns or villages may construct and operate individual systems. At the county level, a facility may be built by the county itself, by a county district, or by a local authority. At the state level there are a number of public authorities or public benefit corporations which can assist in the planning, design, construction, operation, maintenance, and financing of such a facility. In addition, private companies are now developing local projects in the waste management field either on their own or for municipalities (privatization).

Available Mechanisms

Table 51 at the end of this section indicates various state and local mechanisms that can be used for the development of a specific sludge management project. The county may decide to assume the project under its power and as a function of county government under county law. If only a part of the county is involved, a county district can be formed which may include noncontiguous areas. The specific service area is thus delineated and fees apportioned appropriately. Another local development mechanism is an intermunicipal agreement. In this, one municipality may take the lead and share the costs and responsibilities in accordance with the terms and conditions of the intermunicipal agreement. A final local mechanism for project development is the establishment of a local authority. This would be a public benefit corporation chartered under the State Public Authorities Law and established pursuant to an act of the State Legislature in accordance with the State Constitution. The specific powers of a local authority to develop a project are legally delineated and an appropriate blend of public/private responsibilities can be used.

State authorities also have a wide range of powers to assist municipalities in the development of projects. Up to five authorities can do these projects if they are for solid waste. The Port Authority of New York and New Jersey and the New York Power Authority build their own projects in accordance with their legislative mandates or charters. The New York State Energy Research and Development Authority handles projects which are resource recovery facilities specifically in connection with utilities. The Urban Development Corporation (UDC) and the Environmental Facilities Corportion (EFC) have a variety of mechanisms available under their respective statutes to assist municipalities in the planning, design, and construction of a facility. UDC has had limited experience in solid waste whereas EFC is specifically authorized by law to engage in solid waste management projects. Each of these mechanisms, local and state, are described further in the accompanying table.

Because the capital costs for many municipal environmental projects are high and the systems complicated, private vendors are now offering to own and operate local liquid and solid waste projects. This is known as privatization. These vendors find it is in their interest to control the process through their own operation. This concept facilitates the financing, offers a fixed service cost to the municipality which may be lower than the municipality's cost, and provides tax advantages for the private owner. These tax advantages include investment tax credits, accelerated depreciation, and interest and rental deductions.

The current federal tax proposals could have a serious impact on financing through a private owner. The proposed federal legislation would repeal investment tax credits and institute new depreciation schedules. Further, this proposal would also change the allocation rules for the sales of industrial revenue bonds in the state. These developments must be followed closely until the final federal changes are adopted and a new analysis made for the optimal financial and ownership structure of a project.

The alternatives presented in Table 51 should be studied so that once local needs are defined, they can be addressed by the appropriate vehicle. It may be that complete local control and ownership is required or, if that is not an important consideration, the authorities assisting at the state level can own, operate and finance the facility. Early planning and selection of the developmental mechanism to be used is essential. Most mechanisms that could be employed are legally complex and, in many instances, require input and contribution not only from the general public in areas to be served, but from institutions such as banking and industry and developers of specific projects.

To begin the preliminary planning, it is best to initially examine all factors involved in the development of a project. Technology, financing, revenue, grants, and public/private mechanisms all are factors which must be considered and weighed before a municipality can decide the best course to follow. However, use of an existing state authority or establishment by the legislature of a multi-municipal authority with special powers will provide the best management base and greatest flexibility.

TABLE 51

INSTITUTIONAL MECHANISMS FOR SLUDGE MANAGEMENT PROJECTS

MECHANISM	DESCRIPTION	DISCUSSION	FUNCTION
Local Mechanisms			
County	The legislative body of the county may appropriate and expend monies for the management of sludge. May acquire, construct, operate and maintain the necessary facilities for such management. (Reference: County Law 226-b.)	The county can provide recycling centers, transfer stations, hauling facilities, rail or barge haul facilities, processing systems, and other solid waste reduction, treatment, disposal, or conversion systems. Construction requires compliance with the New York State General Municipal Law and Municipal Finance Law. The county may enter into necessary contracts for development directly or with a public authority.	To implement a county sludge management project.
Local Authority (LA)	An LA is a special public authority established by an Act of the State Legislature pursuant to Article IV, Section 5 of the State Constitution. The act identifies the purposes and powers given to the local authority. (Reference: State Constitution, Article IV, Section 5.)	The local authority may be granted the powers to collect, transport, process, and dispose of sludge and septage, design, construct, and operate a sludge management facility; sell any byproducts; contract for loans or grants with other municipalities, public corporations or persons; contract for the design, construction, operation, maintenance, and financing of a sludge management facility.	To implement, develop and finance a county or local sludge management project through revenue bonds.
County Agency	The county may appoint, establish or designate an existing administrative body or public authority to act as its agent to assemble data on sludge management. (Reference: County Law 5A.)	Powers include collecting data on the problems of collection, conveyance, treatment and disposal of solid waste and sludge within the county. May employ engineering, legal, and other professional advice as necessary and budgeted. Where available, it may render technical assistance to local municipalities.	To compile information related to the development of a county sludge management project.

TABLE 51

INSTITUTIONAL MECHANISMS FOR SLUDGE MANAGEMENT PROJECTS

MECHANISM	DESCRIPTION	DISCUSSION	FUNCTION
County District	A county may establish a district under Article 5A of the NYS county law for collecting and disposing of garbage, sludge and septage. It may consist of two or more non-contiguous areas within the county. When designated by the county, it can act as the county agency to plan and develop a sludge management project. (Reference: County Law 5A.)	The district, as an agent of the county, would designate the service area of the proposed project and carry out the functions delegated to it by the county. Such districts require the approval of the State Comptroller.	To implement a sludge management project.
Intermunicipal Agreement	Agreement between two or more municipalities for contractual cooperation to perform joint enterprises which they are entitled to perform individually under law. (Reference: General Municipal Law 5-G.)	The agreement can provide for allocating costs and revenues, and for contracting, and acquisition and sale of property. It can make claims for grants on behalf of the individual participants, and perform the tasks of the individual municipalities on a joint basis.	To act as the joint venture mechanism for a common sludge management project.
State Agencies			
New York State Environmental Facilities Corporation (EFC)	A public authority with broad powers to plan, design, construct, operate, maintain, finance (or combinations of all) solid waste management facilities including sludge management projects. (Reference: Public Authorities Law 1290.)	EFC is empowered to perform any of the actions that a municipality is authorized to do under applicable state and local laws. In addition, it has special powers to subcontract work and to allow a prime contractor to act as the coordinator of all construction.	To assist the counties, villages, cities or towns via a county contract, intermunicipal agreement or series of one or more contracts with municipalities to develop a sludge management project.

TABLE 51

INSTITUTIONAL MECHANISMS FOR SLUDGE MANAGEMENT PROJECTS

MECHANISM	DESCRIPTION	DISCUSSION	FUNCTION
New York State Energy Research and Development Authority (NYSERDA)	A public authority engaged in energy research and development projects. Like EFC, it has tax exempt pollution control financing with special powers for energy related systems. (Reference: Public Authorities Law 1858(11).)	NYSERDA can finance local projects for private utilities. Its special powers include financing energy recovery systems for utility companies.	To finance a private developer of a resource recovery plant. Total development assistance and project management is not available.
New York Power Authority (NYPA)	NYPA has wide authority to develop projects for generating electricity in New York. It builds, operates, maintains, and finances its own projects. (Reference: Public Authorities Law 1010.)	NYPA has proposed developing resource recovery projects in local areas which they would operate. Sludge management could be a part of such disposal efforts. An analysis of the loss of local control of these projects should be made before making final decisions.	To finance, develop and operate its own projects.
Port Authority of New York and New Jersey (PANYNJ)	PANYNJ is a bi-state agency established by interstate compact to develop the Port of New York. It has broad contracting powers that include development of industrial parks. (Reference: Unconsolidated Laws 7173.)	PANYNJ has proposed a variety of resource recovery projects in the New York City area that could include sludge disposal.	To finance and develop total industrial park projects.
Urban Development Corporation (UDC)	UDC, a public benefit corporation, engages in a wide range of development projects. (Reference: Urban Development Corporation Act.)	UDC can use its broad powers to finance and construct its development projects. UDC does not appear to be developing specialized sludge management projects.	To access financial markets useful for project development.
Private Vendor (Privatization)	A private company would take the initiative in development and provide a total sludge management service to a municipality.	A private company could offer total service, including ownership, operation, and a fixed service fee to a local municipality and group of such local units.	To develop a total package for a municipality.

Financing Sludge Management Projects

Financing is integral to any solid waste or sludge management project. Many financing options are available through the public and private sectors or through combinations of both. The final mechanism chosen is generally quite specific to the project. A careful analysis and comparison must be made of all alternatives during the early stages of project planning and development. Table 52 at the end of this section describes each option with attendant advantages and disadvantages.

Public Mechanisms

A financing package for sludge management should offer a municipality the lowest possible cost with a minimum of financial risk. The appropriate method of financing is generally based on risk and reward considerations and cost effectiveness. The project is usually financed using tax-exempt municipal bonds, general obligation bonds or revenue bonds. General obligation bonds require a municipality to pledge its taxing power to ensure timely repayment of the debt and, therefore, provide a wider base from which to collect revenue. With general obligation bonds the payment of annual debt service is secured by the full faith and credit of the state or local government. Revenue financing, another alternative, is project-specific and the municipality is not liable for the debt service. Instead, bonds are secured primarily by a guarantee of fees from the facility which must be applied to retire the debt service.

Federal tax law includes restrictions on the issuance of tax-exempt bonds. The Tax Reform Act of 1986 creates a unified volume cap for Industrial Development Bonds (IDB), including for small issues, of $75 per capita or $250 million through 1986 and 1987. In 1988, the cap drops to $50 per capita or $150 million. IDBs generally are either revenue or general obligation bonds used directly or indirectly to finance a trade or business. Under the new tax law, revenue bonds issued for certain government-owned airports, docks, wharves, and solid waste facilities are not subject to state volume caps but are subject to the minimum tax if more than ten percent of the proceeds of the bond issue is used for a non-governmental purpose.

The Tax Reform Act also repeals the investment tax credit for assets placed in service on or after January 1, 1986 (with certain transition rules).

The law provides that real property financed with the proceeds of small issue bonds must be depreciated over 40 years using the straight line method. Equipment financed from bond proceeds must be depreciated on a straight line basis over the asset depreciation range mid-point life of the particular equipment.

Private Mechanisms

The best financing solution for a municipality is to minimize the debt directly incurred while providing sufficient incentives and benefits to the private developer for the construction, operation, and financing of the sludge management facility. These incentives may involve tax-free interest on bonds, tax deductions for interest or rental payments, accelerated depreciation and private sector bonding, if available. Although a number of government agencies have authorization for specific financing programs, actual assistance is extremely limited due to present national administration policies of minimizing federal involvement in matters that are considered to be local problems and responsibilities. Federal Small Business Administration assistance programs have been virtually eliminated.

Public/Private Mechanisms

While six New York State public benefit corporations can assist in financing resource recovery projects, not all can provide assistance for sludge-only projects. Those that do are: New York State Environmental Facilities Corporation, New York State Energy Research and Development Authority, New York Power Authority, Port Authority of New York and New Jersey, the Urban Development Corporation, and the Job Development Authority.

Of these six authorities, the Power Authority finances only its own energy projects. The Job Development Authority has had a cap placed on its pollution control financing and would be of little financial assistance to municipalities. The Energy Research and Development Authority has largely confined its private financing activities to those for public utilities, and the Urban Development Corporation's reports describe only one related project, a resource recovery plant, which was part of a general redevelopment project. The Environmental Facilities Corporation has very broad powers to assist municipalities and private entities in all phases of project development and financing. It may assist private industry through its industrial pollution control financing program or other financing programs. Each public benefit corporation is tailored to the specific purposes of its enabling legislation. Powers vary widely and each must be evaluated in terms of the specific project.

Certain bonds issued by state and local governments may be tax exempt. A local authority authorized by a special act of the State Legislature can provide either public or private ownership and financing or combinations of both. For example, a local authority could do the revenue financing for a private developer. A sludge management facility might be owned by a private developer with financing available only through the local authority's revenue bond structure. In Dutchess County, for example, a local authority was constituted by legislative act to finance a resource recovery plant. The County will own the facility when completed, while a Pennsylvania engineering corporation will design, construct, and operate the plant.

Local Industrial Development Authorities (IDA) have been used for project development for solid waste and resource recovery. Under these arrangements, the IDA owns the project until the bonds are paid. Resource recovery projects in Peekskill, Westchester County and Glen Cove, Long Island used IDA financing.

A local development corporation can provide technical and financial assistance. While it may develop and operate commercial facilities, it does not do financing.

TABLE 52

FINANCING MECHANISMS FOR SLUDGE MANAGEMENT PROJECTS

MECHANISM	DESCRIPTION	ADVANTAGES	DISADVANTAGES
Public Mechanisms			
General Obligation Bonds	A financial obligation of debt secured with the full faith and credit of the issuing entity. Debt service is paid from the general fund of the issuing source. Typically, the bond issue is subject to a public referendum.	Referendum approval indicates support for project. Full faith and credit backing generally enhances the marketability of the bonds. General obligation bonds of state authorities may be backed by the "moral obligation" of the state. the credit rating of the issuers determines the financing cost and not the technical merit of the project. Interest on bonds is generally tax-exempt.	Use of these issues for solid waste projects which approach the government unit's bonding limit may displace or prevent the use of bonds for other local capital projects. Issues are subject to voter approval. In times of austerity, bond issues may be unpopular. Approval of state moral obligation issues is virtually impossible. The credit rating would be that of the municipality.
Special Revenue Financing	A financial obligation of debt which is secured by the anticipated stream of revenue generated by the project. State and local issues for solid waste disposal may be exempt from tax on the the interest. Financing by certain state authorities require Public Authorities Control Board approval.	Revenue bonds are issued for a specific project, and do not interfere with other capital project general obligation financing. Issues are generally tax-exempt. Revenues from a project are used to meet debt service obligations. Revenue bonds are not subject to constitutional debt and bonding limits.	The 1987 federal tax law severely limits or eliminates tax exempt status for certain of these issuers. Revenue projections must be analyzed against varying marketing conditions for the recovery projects.

TABLE 52

FINANCING MECHANISMS FOR SLUDGE MANAGEMENT PROJECTS

MECHANISM	DESCRIPTION	ADVANTAGES	DISADVANTAGES
Leveraged Lease Financing	A financial package that combines several financing mechanisms to provide participants with either tax benefits or lower financing costs. It generally involves 2 major participants: a financial intermediary (lessor) and an implementing agency (lessee). Lower long term capital and interest benefits accrue to the implementing agency if a lessor is interposed between the long-term source of capital and the agency. The private company lessor receives the tax advantages of ownership and the agency, in turn, receives benefit from lower charges from the intermediary.	Lower interest rate achieved by lessee through private ownership by lessor which can obtain tax advantages a government cannot. The municipality can arrange to buy the project at the end of the lease at fair market value or renew the lease. Private industry can supply capital at effectively lower rates. This enables a municipality to avoid raising capital in the market. Service company can own and reserve rights to sale for tax purposes to a third party.	This type of financing is relatively new, and extremely complex. At the end of the lease the facility is owned by the lessor. If the implementing agency (lessor) can achieve the same tax benefits, there is no benefit to the lessor. Financing charges are subject to lessor's ability to obtain good rates. May not be a real alternative since the non-related third party which is necessary may only be interested in tax benefits. This option is not favorable under new federal legislation.
Indirect Federal Assistance	Several tax benefits have been available in the past for private ownership.	Private owner receives indirect assistance not available to public ownership.	Under 1986 tax law, these benefits are reduced considerably.

TABLE 52

FINANCING MECHANISMS FOR SLUDGE MANAGEMENT PROJECTS

MECHANISM	DESCRIPTION	ADVANTAGES	DISADVANTAGES
1. Investment Tax Credits	Until Tax Reform Act of 1986 owners of a facility could claim a direct deduction of a 10 percent investment tax credit. The new tax law repeals the investment tax credit with respect to property placed in service after December 31, 1985. The only exception to this applies to property that meets a transition rule for depreciation. In this instance the credit amount (for transition property) is reduced by 35 percent for taxable years beginning after June 30, 1987 with a phase-in for earlier taxable years. A taxpayer is required to reduce the basis of its transition property for depreciation by the full amount of the credit - after the 35 percent adjustment.	N/A	N/A

TABLE 52

FINANCING MECHANISMS FOR SLUDGE MANAGEMENT PROJECTS

MECHANISM	DESCRIPTION	ADVANTAGES	DISADVANTAGES
2. Accelerated Depreciation	Accelerated depreciation allows a faster write-off mechanism for capital investments.	Faster write-offs encourage capital investments.	HR3838 (Tax Reform Act of 1986) modifies the Accelerated Cost Recovery System by adding four additional classes into which property may be categorized and by providing for more accelerated depreciation. The cost of real property will be recovered on a straight line basis. The tax law also provides an Alternative Depreciation System (ADS) for certain categories of property including property financed with the proceeds of tax exempt obligations. The cost of ADS property must be recovered on a straight line basis over its class life, Asset Depreciation Range midpoint life. Real property must be recovered over 40 years. The cost of solid waste disposal facilities must be recovered over its class life (generally 10 years for waste reduction and resource recovery projects).

TABLE 52

FINANCING MECHANISMS FOR SLUDGE MANAGEMENT PROJECTS

MECHANISM	DESCRIPTION	ADVANTAGES	DISADVANTAGES
3. Interest or Rental Charges	Interest on bonds of state and local governments exempt from taxation. Rental charges on leased property are operating expenses and deducted from revenues before income is determined for the private company.	Interest deductions and rentals reduce net income, tax liability and enhance profit margin. (Interest for state deduction is still intact.)	Tax Reform Act of 1986 provided a more restrictive concept of private activity bonds (any bond that satisfies a private business use or private security test). Interest on private activity bonds will be taxable unless the obligations are characterized as qualified bonds.
Private Financing	Various investment tools are available to the private sector which are not available to government units.		
1. Equity Investment	An arrangement where one or more firms invest capital in expectation of returns greater than can be returned from interest investments.	Private capital is put at risk and thus obligation of municipal resources is reduced.	Requires availability of investors. Competition may exist from high interest alternatives elsewhere.
2. Debt Financing	One or more firms may issue corporate debt in conjunction with the equity investment.	Private capital is put at risk and thus obligation of municipal resources is reduced.	Subject to availability of markets for corporate issues.
3. Industrial Revenue Financing	Interest on obligations of the bond sale by the political subdivision is excludable from the gross income of the bond holder, provided bonds are for an eligible activity and are paid for by revenues from the project.	Interest is excluded from gross income of bond holder. Developer's credit backs the issue.	Must be for an eligible item under Section 103 of the Internal Revenue Code. Federal legislation has placed a "cap" on each state's financing entities based on a per capita limit of $75/person. Per capita limit of $50/person is scheduled for January 1, 1988. Pollution control issues are eliminated under Tax Reform Act 1986.

TABLE 52

FINANCING MECHANISMS FOR SLUDGE MANAGEMENT PROJECTS

MECHANISM	DESCRIPTION	ADVANTAGES	DISADVANTAGES
Private Business Federal Assistance			
1. Small Business Administration (SBA)	SBA's purpose is to aid, counsel, assist and protect the interests of small business by various means including loans to small business concerns and small investment concerns, and to guarantee surety bonds for small contractors. It provides guaranteed, direct or immediate participation loans to assist firms in meeting air or water pollution standards through 100% backing of loans, leases, or other contracts. It can also provide management assistance and minority business advice.	Guarantees of financing give small companies access to money markets at better rates than might otherwise be possible. Useful for small contractors who may be involved in resource recovery construction or investments. "Minority business" assistance would be useful in government assistance projects. Some grants are available for equipment needed by minority contractors.	Because eligibility is limited to small business, capital requirements for larger-scale resource recovery projects would probably preclude use of SBA. SBA will back loans only after all other private banking attempts have been exhausted. The future of SBA is extremely doubtful.
2. Economic Development Administration (EDA)	Does not offer applicable financing; grants only.		
3. Urban Development Assistance Grants (UDA)	Does not offer applicable financing; grants only.		

TABLE 52

FINANCING MECHANISMS FOR SLUDGE MANAGEMENT PROJECTS

MECHANISM	DESCRIPTION	ADVANTAGES	DISADVANTAGES
4. United States Environmental Protection Agency (USEPA)	Does not offer applicable financing; grants only.	Grant would reduce capital costs.	Funds are limited and projects must score high on state priority list.
State Financing Programs			
1. New York State Environmental Facilities Corporation (EFC)	A public benefit corporation with power to assist municipalities in the planning, design, construction, operation, maintenance, and financing of environmental projects including solid waste and sludge management facilities. In addition, EFC can finance pollution control and other projects for private companies.	Bonds can be either special obligation or revenue issues. EFC can act as agent for all or part of a project for a municipality or state agency. EFC is designed to develop a wide variety of environmental projects. Can provide technical assistance to both public and private clients. Either the Corporation or the municipality can own the project. EFC has power of eminent domain.	Present state directive limits the types of municipal projects in which EFC can engage. Level debt (equal annual payments) financing for municipal projects is legally possible. The Tax Reform Act of 1986 eliminates tax-exempt status of pollution control financing, and places qualifications on bonds used for solid waste management facilities.

TABLE 52

FINANCING MECHANISMS FOR SLUDGE MANAGEMENT PROJECTS

MECHANISM	DESCRIPTION	ADVANTAGES	DISADVANTAGES
2. New York State Energy and Research Development Authority (NYSERDA)	A public benefit corporation whose purpose includes development and advancement of new energy technologies and conservation methods. Programs include research, development, and demonstration of new energy technologies, renewable and indigenous energy resources and fossil fuel and electrical systems. NYSERDA also has pollution control facilities financing and special energy programs. Financing programs enable utilities and other private enterprises to obtain tax-exempt financing.	Pollution control financing is tax exempt per Section 103 of Internal Revenue Code. Has same benefits as a local IDA.	No grants available except for research or unique demonstration projects. Projects must be energy related. Pollution control issues could lose tax exempt status under pending federal tax proposals.
3. New York Power Authority (NYPA)	NYPA is authorized to maintain an adequate and reliable supply of electricity throughout the state. NYPA can issue its own general obligation or special revenue bonds secured by assets of, or revenues from, a special project.	Has wide procurement powers. Can finance plants throughout the state which generate electricity. NYPA is not subject to Public Authorities Control Board approvals on financing. Can perform construction.	NYPA's interest may be in large projects only. Will finance only those projects which they own, build and operate and are energy producers.
4. Port Authority of New York and New Jersey (PANYNJ)	PANYNJ is a bi-state agency charged with developing the Port of New York. Created by compact between the 2 states. Its master plan includes industrial parks with resource recovery projects as a means of providing low cost energy to industrial clients.	Has wide authority to engage in different methods of procurement, including sealed bids, competitive or sole source negotiations or two-step advertising. The Authority is not bound to New York State municipal laws and can issue either consolidated or project revenue bonds.	The PANYNJ projects and financing are limited to the New York City area.

TABLE 52

FINANCING MECHANISMS FOR SLUDGE MANAGEMENT PROJECTS

MECHANISM	DESCRIPTION	ADVANTAGES	DISADVANTAGES
5. Urban Development Corporation (UDC)	A public benefit corporation which assists in developing a wide range of projects including industrial and commercial. It is empowered to issue general obligation bonds as well as project revenue bonds.	Having both government obligation and revenue financing capability provides great flexibility. Vast scope of projects. Experience with financing. Special powers to sponsor or organize subcorporations. Can perform construction.	Must generally comply with municipal bidding procedures. Only one solid waste project has been implemented to date.
6. Job Development Authority (JDA)	A public benefit corporation organized to improve employment opportunities. It assists with financing the construction activities of industries by guaranteeing the loans made by non-profit institutions. Can also loan money to local non-profit development corporations for the cost of machinery and equipment by securing an interest in the project and guaranteeing the loans. Can assist in financing projects of businesses in rural areas through the Rural Development Loan Fund.	Has power to finance job development-related projects of private companies at below market rate.	Pollution authorization remaining is essentially non-existant. Has no present pollution control program.

TABLE 52

FINANCING MECHANISMS FOR SLUDGE MANAGEMENT PROJECTS

MECHANISM	DESCRIPTION	ADVANTAGES	DISADVANTAGES
Local Financing			
1. Local Industrial Financing Agency (IDA)	A local economic development agency authorized to finance the development of local industrial facilities. It may be a county, town, or local municipal agency which may issue industrial development bonds for specific projects. The bonds are revenue bonds backed by the faith and credit of the private developer. Interest on the bonds is tax exempt. Tax abatement programs are possible. In the case of developing a facility, the developer requests financing, but title of land and facility rest with the IDA until the bonds are paid off. The facility is leased back to the developer. Short term loans are also available for equipment.	Interest is currently tax exempt. Local agency may be in best position to evaluate best local uses of financing. Financing is relatively flexible. At the end of bond period, the developer has an option to buy the project at a nominal cost, normally one dollar.	Sludge projects must compete with other uses. Legislation pending in Congress could seriously impair tax advantages. IDA does not engage in construction as do many state authorities. IDAs are subject to state cap limitations.
2. Local Development Corporation (LDC)	A local agency created and controlled by community organizations to act as a vehicle for commercial development. The LDC must have a minimum of 25 members with 75% of ownership and control held by local business operators. Federal SBA funds under its Section 502 programs are "passed through" SBA to local merchants. LDCs may acquire, lease, or mortgage both real and personal property.	LDC provides financial and technical assistance for construction or improvement of industrial facilities. Can also develop, operate or maintain commercial and recreational facilities.	Activities are limited to resources available through SBA and JDA programs and are thus subject to uneven or minimal funding. LDCs, unlike IDAs, do not do financing. LDCs are corporations and must function in conformance with New York State corporation law.

Revenue Sources and Grants

Introduction

This section presents the major revenue alternatives available to offset the inherent costs of new and improved sludge management projects. While some of the alternatives are the least desirable (total taxation), others can be used to reduce the consumer's share of costs. Other revenue alternatives such as tipping fees and product sales offer the possibility of reducing user costs. However, many of the revenue mechanisms, because they might involve byproducts, must await the operation or even long term use of the facility. Therefore, initial development costs may still have to be borne by the municipal constituency.

The possibilities for grants from various state and federal sources are also reviewed in this section. Grants reduce the net cost to the municipality and are particularly beneficial where the expenditure of large capital costs are anticipated.

Revenue Sources

Various sources of revenue as well as their major advantages and disadvantages are shown in Table 53. Possible sources include "charge back" items such as taxation, tipping fees, and byproducts. The various powers of a municipality to raise revenue by taxes are quite broad and could ensure the necessary revenue base for financing a project. They could also provide some of the initial development costs which are subsequently capitalized through long term debt. Byproduct sales play an important role in reducing costs. But they, as with tipping fees, cannot produce revenue until the facility is in use. The table is furnished so the total project may be developed in conjunction with technology and financing.

From a review of sludge and solid waste technology, it is clear that the sale of byproducts can provide a key revenue source. For example, compost can be packaged and sold, and land-applied sludge can benefit both the generator and user. The revenues derived from byproduct sales must be evaluated against the cost of producing any byproduct. It is imperative, therefore, to develop a marketing plan and identify potential customers during the project planning to evaluate the precise cost benefits from the capital expenditures required to produce those revenues.

Grants

New York has been the only state to offer municipalities major grant assistance in reducing the capital costs of solid waste disposal projects. This was established through the Environmental Quality Bond Act (EQBA) of 1972. However, the portion of the act reserved for sludge projects is essentially depleted and very little chance exists for reallotment of funds for projects which have been slow in developing. A new bond act will be presented to New York State voters in November 1986 which may provide new monies for sludge management projects. Federal and state grant funds are

virtually non-existent. While most federal programs are still authorized, they are either not being funded or being funded at such low levels as not to be beneficial. These programs must be monitored annually in the event policy changes occur at the state and federal levels which will result in increased availability or new programs. Table 54 shows possible sources of grants.

TABLE 53

REVENUE SOURCES

MECHANISM	DESCRIPTION	ADVANTAGES	DISADVANTAGES
Taxation	Procedure used by various levels of government whereby a levy is placed on the individuals and concerns within that political jurisdiction. The purpose is to produce revenue to carry out the various functions of the jurisdiction. It can take the form of income tax, sales tax, property taxes, service charges, user charges, special, and ad valorem tax.	Can produce a solid base for assured legal revenue. The more general taxes provide a wider base while special levies can be used for specific items or services. User fees in various forms can be developed for a specific purpose, e.g. water rents, as opposed to ad valorem levies.	Taxes are difficult to levy due to general taxpayer opposition. Certain taxes are limited to specific purposes, e.g. revenue charges for services used to retire revenue bonds can be used only for that purpose.
Tipping Fees (User Charges)	A charge levied on all wastes brought to a waste processing facility. Charges can be made on a volume or weight basis with special charges. Charges can cover capital, operation and maintenance costs.	User fee charges based on actual costs and made by an established rate schedule. Can also be adjusted to reflect decreases or increases in cost. Rate schedules provide a flexible revenue-producing mechanism. Can be used by either a private or public developer or operator.	Cannot collect until facility is in use (user fee). Equity of rates must be carefully calculated to avoid unfair distribution of charges. May require close regulation, particularly for private developer or operator. High user fees may redirect wastes to other facilities that are less environmentally sound.
Methane Recovery	Decomposing organic material produces carbon dioxide, methane and other gases by reason of its mutual degradation, even when buried. Gas wells are used to tap and process the methane component.	Methane gas can be sold if a sufficient amount is available and markets are available.	Must await possible long term development of the gas in the fill. May not be of sufficient quality to sell without further processing equipment. Very market sensitive.
Composting	Product produced by the degradation of organic material.	Recyclable product can be sold to offset processing costs.	Limited markets and competition with other soil supplement products or virgin products (for recyclables).

TABLE 54

SOURCES OF GRANTS

MECHANISM	DESCRIPTION	ADVANTAGES	DISADVANTAGES
Granting Agency			
1. United States Environmental Protection Agency	RCRA* and 201** grants to municipalities or other eligible local government bodies. Combined with state monies.	Matching grant programs up to 85% of eligible costs of construction. Higher amounts available for innovative alternatives (75% Federal, 15% State).	RCRA grants not funded. 201 grants limited to construction plus a percentage of costs for planning and design.*** Projects must score sufficiently high on priority ranking which favors water pollution projects.
2. United States Department of Energy	Grant and loan guarantee programs for private and public energy-related programs.	Research monies exist.	Municipal programs are not being funded. Programs must be energy related.
3. New York State Department of Environmental Conservation	Environmental Quality Bond Act (EQBA) grant program for local government-owned projects.	25% grants from EQBA for landfills only.	EQBA bond money fully committed. New bond act may provide funds. Must be approved by voters.
4. New York State Energy Research and Development Authority	Research grants can apply to public and private projects.	Matching grant programs.	Funds limited to research and new energy related projects.

* Resource Conservation and Recovery Act.

** Section 201 of Federal Clean Water Act.

*** 14.5% for projects of $100,000 or less to 5% for projects up to $200 million, calculated on a downward sliding scale.

TABLE 54

SOURCES OF GRANTS

MECHANISM	DESCRIPTION	ADVANTAGES	DISADVANTAGES
5. United States Department of Housing and Urban Development	Has Small Cities and Urban Development Assistant Grants. Grants are made to municipalities for private development of local projects.	Solid waste projects are eligible for grants.	Funds limited, very competitive. Generally project must be done in conjunction with other redevelopment projects.
6. United States Department of Agriculture	Farmers Home Administration loan and grant programs for rural areas made to local government units.	Loans available for rural portions of a county project. Other subdivisions may be eligible for loans in areas with less than 10,000 population.	Eligibility limited to rural projects.
7. United States Department of Commerce	Grants ranging from 50 to 80% of costs through Economic Development Administration (EDA) to municipalities for public projects.	Direct grants to publicly-owned facilities. Grants based on total project costs.	Grants based on job creation. Generally small projects, $400,000 to $1 million. No solid waste projects to date. Limited to publicly owned projects.

SECTION 7. RECOMMENDATIONS

Long Term Recommendations for Regionwide Sludge and Septage Management

Septage

Send All Septage to Designated Sewage Treatment Plants (STPs)

1. Select sewage treatment plants (STPs) to receive septage based on:

   a. transportation distance
   b. existing sludge holding capacity
   c. size of facility
   d. disposal option used at facility and cost of disposal
   e. sludge quality at the designated STP.
      (Sludge must be of acceptable quality.
      Septage can not be mixed with contaminated sludges.)

2. Provide separate process train for septage at designated STPs consisting of:

   a. influent structure (mechanical bar screen and grit removal)
   b. flocculating clarifier or dissolved air flotation
   c. storage or digestion, depending on disposal alternative.
   d. utilize disposal options available at the designated STP

Sludge*

1. "A" sludges should be land applied whenever possible.

2. For "C" sludges:

   - investigate upgrading sludge quality by:
     an industrial pretreatment program
     source reduction of contaminents

3. For "D" sludges:

   - land apply at dedicated site (best alternative)
   - incinerate
   - landfill

* Sludge Quality Evaluation Criteria are contained in Figure 1.

Integrated Site

One centralized site could be used to implement four options: land application, landfill (for sludge and ash residue), composting, and incineration. The site could be developed on a modular scale to allow ease of expansion, flexibility of operation, and centralized management. A minimum of 200 acres would be required for any of these options.

a. Landfill

Construct a landfill to handle incinerator ash and as a backup for composting, land application, and incineration shutdowns when and if necessary.

b. Incineration

Two modular 20 tons per day (TPD) facilities could be constructed initially, capable of expansion. For example, Westchester County's sludge could be sent to this incinerator should ocean disposal be discontinued in the future.

c. Composting

A ten to 30 dry tons per day aerated static pile composting facility could be constructed if appropriate after on site pilot projects.

d. Land Application

Sludge could either be applied on site if the site is large enough, or to cropland in the surrounding area.

The concept of central site management could be particularly effective because:

1. A central staff could locate and contract for cropland and schedule sludge and compost applications in the seven county area.

2. A staff or contracted agronomist could be available for both land application and composting programs.

3. Central computer data management could be provided.

4. The application of sludge or hauling of sludge and compost could be contracted or done by staff.

Ideally, the centralized site should be located close to a wastewater treatment plant. If sufficient land is not available to contain all four options, one or more options might be located away from the main site. For example, farmland for land application might be a short distance away, as might a landfill.

General Recommendations by Alternative

Land Application

Land application is recommended as the preferred alternative as it is the least costly, the simplest, and uses the recycle value of sludge and septage to the maximum. The amount of sludge which may be land applied in the region is limited by its quality and whether it is stabilized in accordance with NYSDEC regulations.

As a first step in developing a land application program, sludge and septage quality must be defined to a degree not now available. Section 2 of this report provides a brief discussion of the need for further analysis of sludge quality. With good data on sludge quality, a county or regional management plan could be developed, using private farms on a rotational basis.

Table 26 in Section 2 indicates that a significant quantity of sludge and septage (28,000 tons) could be land applied in the region using only about five percent of the region's available cropland. On an individual county basis, only Westchester and Rockland counties have insufficient land to use this option for a major portion of their sludge and septage wastestreams.

Specific Recommendations - Land Application

1. Initiate a six month sampling and analysis program, in accordance with NYSDEC guidelines, to adequately characterize sludge quality at sites where such data is currently lacking or inconclusive.

2. Discuss with NYSDEC officials the advisability of conducting a sampling and analysis program for domestic septage.

3. Develop appropriate siting criteria and evaluate specific sites within the region to implement a sound management approach for a land application project. Municipalities should be actively involved during the criteria development stage.

4. Where sludge is determined to be "contaminated", an evaluation should be made of the causes. The cost efficiency of addressing the contamination problem at the source versus treating a contaminated sludge should also be investigated.

5. Develop a detailed cost estimate for each generation and disposal site considered for development.

6. Consider canvassing the region for potential "dedicated" sites that could be used for disposal of "D"-rated sludges.

Landfill

As discussed in Section 3, landfilling of sludge and septage should be limited to interim measures or cases where no other option is available. The availability of landfill space in a neighboring county is severely restricted by non-importation laws which nearly every county has. Landfilling sludge fails to use the energy and nutrient values of sludge, wastes landfill capacity, and generates a substantial amount of leachate due to the high moisture content (approximately 80 percent).

Long term reliance on landfilling should be limited to the following:

1. Small plants which are located too far from another disposal option to make transportation economical.

2. STPs which produce a "C" or "D"-rated sludge ("contaminated" or "semi-contaminated", respectively) if ocean disposal or incineration options are not available.

3. As a backup for other disposal options, for example when insufficient winter storage is available for sludge which is usually land applied or when an incinerator is out of service and storage capacity is exhausted.

Where landfilling of sludge is contemplated, facilities for dewatering to a minimum of 20 percent solids and a stabilization process to significantly reduce pathogens (PSRP) must be available.

Composting

Composting is not a disposal process, per se, but only a conditioning process to provide an enhanced disposal opportunity for sludge. The principal nutrient in sludge, nitrogen, is reduced by approximately 50 percent during the composting process. The production of compost from sewage sludge and septage is costly. The lack of long term experience with composting operations in the U.S. makes cost estimates for composting impossible without completing detailed site and sludge analyses. The major difficulties in developing accurate cost estimates are:

- cost and availability of bulking agents
- transportation costs for sludge and finished compost
- availability of markets for compost and the market value of compost.

Despite these disadvantages, EFC encourages the seven counties to implement a composting program at least on a pilot scale. Composting can augment any sludge management program, especially on a regional basis, and provide an opportunity to expand a small scale facility should the economics of composting appear favorable. This approach is particularly attractive considering the uncertain future of ocean disposal and EFC's recommendation to discourage landfilling as a sludge disposal option.

Expansion of a composting facility could be phased in together with the phasing out of either a landfill or ocean disposal. In addition, uncertain future regulatory constraints regarding incineration (especially air pollution control and ash disposal considerations) as well as the cost of this option make composting worth the investment on a small scale.

EFC recommends:

1. Develop an aerated static pile pilot project on a site with adequate buffer and expansion area.

2. Monitor closely the success of new in-vessel composting systems in the east (including in Schenectady, Plattsburgh, and Endicott in New York State and Cape May, New Jersey) for application to the seven county region. Five small-scale composting facilities, some privately operated, currently exist in the region. These should be investigated for their potential to be upgraded for county or regionwide participation.

Ocean Disposal

Although sludge and septage is disposed of in the ocean directly from only one STP (Yonkers) septage haulers and other STPs in the region use the ocean, mostly for indirect disposal of septage. While the quantities of septage contributed from outside Westchester County are not significant (approximately 1,500 dry tons per year), the elimination of ocean disposal as an alternative would have a significant effect on the indirect users of ocean disposal.

Given the uncertain future of ocean disposal beyond 1991, it would be irresponsible to recommend that this option be considered by communities not now employing it. Based on a favorable bid by a private contractor, Westchester County has, understandably, elected to continue ocean disposing of sludge until such time as this practice is prohibited by the USEPA. The potential for upstate counties to take advantage of ocean disposal was considered at meetings with county technical representatives and is addressed in Section 3 of this report. The constraints of time and cost did not permit EFC to do a detailed evaluation of the expansion or construction of suitable docking facilities and the necessary appurtenances required to implement an ocean disposal program for facilities north of Westchester County. However, USEPA officials indicated in discussions with EFC that they would be receptive to an application for interim permission to ocean dispose of sludge from upstate sources, either alone or in concert with Westchester County. As discussed in Section 3, Ocean Disposal, such a permit application would be costly to prepare and implement and, perhaps, be only a short term option. However, owing to the low overall disposal cost to Westchester ($109 per dry ton), this option may be a viable alternative to other options based on cost and availability.

Incineration

Incineration is the recommended alternative:

1. for the disposal of "C" contaminated sludges, since these sludges may not be composted or land applied

2. for the disposal of "D" (semi-contaminated) sludges where a dedicated disposal site is not available for land disposal or landfill options.

Incineration processes should only be considered by STPs larger than five million gallons per day, and at locations where landfill or ocean disposal of sludges is limited or prohibited by regulatory agencies.

The existing incinerators in the counties should upgrade dewatering facilities and combustion control equipment to provide more cost effective operation and increased capacity.

A modular incinerator should be incorporated in EFC's recommended integrated regional facility. This will allow the flexibility of treating contaminated sludges and will provide a backup alternative for treatment of land disposed, uncontaminated sludges during winter months. The modular concept will allow for expansion of the incinerator facilities should the results of the recommended further analysis of sludges, indicate a larger amount of "C" sludges, or should sludge quality deteriorate at any treatment plant, in the future.

If a regional integrated site is developed and the incinerator alternative is incorporated as recommended, the participating counties must also site a secure ash landfill to dispose of residual ash from the incineration process. The site selection process and evaluation criteria should be developed in accordance with Section 5 (Siting) of this report.

Recommendations for Each County

DUTCHESS COUNTY

At the time of this writing, the Dutchess County Resource Recovery Facility is approxmately 50 percent complete. The County expects to accept the facility from the developer in March of 1987. The opening of this facility should coincide with the closure of virtually all landfills in the county. This situation will create a crisis in sludge and septage management if alternate disposal plans are not prepared. With the exception of approximately 2,300 dry tons of sludge and septage which are composted at one site, nearly all sludge and incinertor ash is ultimately landfilled in the county. With a future of limited landfill capacity available in the county, other sludge and septage disposal options should be considered.

A land application program for all sludge and septage generated in the county would require approximately five percent of the cropland available in Dutchess. The availability of two sludge incinerators at Arlington and Beacon, provide the potential to dispose of sludges in the county which do not meet land application and composting standards.

Recommendations

1. Dutchess has the unique opportunity to explore the potential of composting on a full scale basis due to the existence of a 2,300 tons per year facility in Poughkeepsie. The success of this operation should be monitored by the County or a regional authority, and the potential for expansion to a county-or region-wide program can be explored.

2. EFC recommends a land application program be developed to land apply all sludge and septage meeting NYSDEC quality guidelines. EFC believes that this option is particularly important in Dutchess because:

   a. The resource recovery facility will provide an opportunity to phase out all but one landfill in the county for ash and non-recyclables. Thus, no refuse will be available for sludge mixture requirements and landfill space will be particularly valuable.

   b. The availability of an operating composting facility could provide an opportunity for a "dual utilization" program: composting of sludge during winter months and applying to land when climatic conditions permit.

3. Upgrade the dewatering capabilities and combustion control equipment at the Arlington and Beacon sludge incinerators to provide for more cost effective operation and excess capacity. This excess capacity should then be reserved for "contaminated" sludges which cannot be land applied or composted or to provide a backup for land application and composting programs.

ORANGE COUNTY

The major sludge disposal option available to Orange County is landfilling at the Orange County Landfill (OCLF). Several small landfills are currently operating on a limited basis and their closure appears to be imminent. In addition to landfilling, several small lagoons and land application operations exist in the county. It is believed that the existing lagoon and land application programs cannot qualify for a permit under NYSDEC regulations and will also be closed in the near future. Orange County presently has no access to ocean disposal, incineration, or composting alternatives in the county.

NYSDEC has determined that the OCLF is located above a primary aquifer, and has refused to allow lateral development or expansion of the existing site. A 1986 study by O'Brien and Gere (see "Review of County Reports", Section 3) recommended that retrofitting a liner and leachate collection system would be adequate for protection of the aquifer. Currently, an environmental impact statement is being prepared on the landfill expansion and public hearings are anticipated. NYSDEC denial of permission to expand the OCLF may result in a disposal crisis for all wastes generated in Orange County.

Septage management programs at three major treatment plants in the county: Newburgh, Orange County Sewer District No. 1, and New Windsor, are progressing well and it is anticipated that most septage in the county will eventually be handled in this manner. This procedure for managing septage at STPs is consistent with EFC's recommendations. The ultimate disposal of this septage is also at the OCLF.

Recommendations

1. Orange County currently relies on the OCLF for 80 percent of its sludge and septage disposal. This quantity could approach 100 percent in the future when operations which do not qualify for a permit are curtailed by NYSDEC. With this in mind, the County should move to implement alternative sludge and septage disposal options on a county or regional basis. This approach would be particularly important if plans for the OCLF expansion were denied or limited.

2. Due to the almost total reliance on the OCLF and the uncertain future of that site, Orange County should be especially supportive of the "integrated site" concept discussed in Long Term Recommendations. The integrated site could conceivably provide incineration, composting, and land application options to supplement or replace sole reliance on the OCLF.

3. In addition to the integrated site approach, Orange County could consider the following possibilities to reduce its reliance on the OCLF:

a. Land application on a county basis would require 3.2 percent of available cropland for all sludge and septage generated in the county meeting NYSDEC regulations.

b. Incineration could be considered at a larger STP to receive sludge not acceptable for land application or composting and as backup capacity for those options. The Newburgh incinerator could be retrofitted with a belt press and combustion control equipment.

c. Ocean disposal as a short term option could be discussed with Rockland and Westchester counties as mentioned in Recommendation No. 5 for Rockland County.

d. Composting of sludge and refuse (co-composting) was recommended for Orange County in an engineering report reviewed during the course of this study (see Section 3). While EFC does not recommend co-composting at this time, Orange County should consider composting at the OCLF or other appropriate site on a pilot scale should a regional sludge management approach or an integrated site appear not to be implementable in the near future.

PUTNAM COUNTY

Putnam disposes of nearly all its sludge and septage out of the county. Three STPs in the county dispose of sludge on site. This practice is probably not permissible under NYSDEC regulations and will be discontinued in the future. Two other STPs dispose of sludge in Dutchess County. The future of this option is questionable when considering Dutchess County's sludge disposal problems. One STP disposes of sludge at the Phillipstown landfill. Phillipstown and Patterson are the only two landfills currently operating in the county. Discussions with technical representatives from Putnam indicate that both of these sites may be closed within a year. The remainder of all sludge and septage generated in Putnam is ocean disposed.

Accurate quantities of sludge and septage generated in the county are impossible to determine without a site by site analysis because a large percentage of sludge and septage is being discharged out of the county. Recordkeeping is inadequate at the smaller facilities, and most septage is transported by haulers located outside of the county. According to a Malcolm-Pirnie report in 1981[1], 4.7 million gallons (588 dry tons at 3 percent solids) of septage are generated annually in the county. Information supplied by county technical representatives led EFC to estimate that approximately 300 tons per year of sludge are generated in addition to septage. As it is estimated that only 13 percent of the Putnam County population is sewered and little attempt is made to determine the origin of septage, the quantities of septage could be much greater than estimated.

Putnam County technical representatives have indicated that the plan to modify the Carmel No. 2 STP to receive septage from a large portion of the county has been amended to accept septage from the Town of Carmel only. However, the town has taken no steps to modify the facility to include provision for septage treatment.

The information furnished to EFC seems to indicate that, in the near future, Putnam will have no viable disposal sites within the county. In addition, EFC is aware of no contractual agreements between the county and other municipalities or private entities, or any impending negotiations in progress or planned, to provide viable disposal options for Putnam.

[1] "Septage and Sludge Treatment and Disposal Study for Putnam County, New York", Malcolm-Pirnie, June 1981

Although Putnam County generates the least amount of sludge and septage in the region, it has the greatest need to develop a viable sludge and septage management program because:

a. Data available on sludge and septage quantities and quality is mostly estimated and of questionable value.

b. No acceptable disposal sites in Putnam County may be available beyond next year.

c. No known planning efforts are in progress to secure disposal sites in or out of the county.

Recommendations

1. Putnam County should act immediately to appoint a waste management task force to stimulate and coordinate efforts within the county to provide for adequate disposal of wastes generated within the county.

2. Putnam County should actively support and foster future efforts toward a regional solution to sludge and septage management.

3. The plan to dispose of septage at STPs, as suggested in the Malcolm-Pirnie report, should be seriously considered on a countywide basis. In addition, sludge from smaller STPs lacking dewatering or stabilization processes should also be considered for disposal at the larger STPs. This approach will undoubtedly require expansion of solids handling facilities at most, if not all, facilities designated to receive this additional material.

4. For the short term, the County, by way of a waste management task force or other means, should immediately engage in negotiations with private entities and other municipalities such as, Westchester County, to secure disposal options beyond 1986.

ROCKLAND COUNTY

Due to the lack of potential sites for sludge disposal facilities, Rockland faces an imminent crisis in sludge management. This is a similar situation to that occurring in Westchester with the exception of Rockland's inability to ocean dispose of sludge.

The quality of approximately 90 percent of the sludge generated in Rockland County (i.e., "contaminated") limits the disposal options This quality restriction limits disposal options to three: ocean disposal, incineration or landfill. The landfill situation in the county is essentially limited to the Town of Haverstaw Landfill which will not accept sludge from outside the Town except on a very limited, emergency basis. Incineration is available at the Orangetown STP. Rockland County Sewer District No. 1 (RCSD#1) is presently hauling sludge to Orangetown and is comtemplating construction of its own incinerator. A delay in the siting and construction process could create a problem as new process units coming on line next year could generate sludge quantities beyond the capacity of the Orangetown incinerator. Ocean disposal facilities are presently not available to Rockland County.

Recommendations

1. Sludge quality in Rockland County precludes land application and composting as viable sludge management alternatives. The sources of sludge contamination should be determined. The cost of reducing contaminants in the sludge should be evaluated against the limited availability of disposal alternatives if quality is not improved.

2. If improving sludge quality is not cost effective, RCSD#1 should proceed with its plans to build a multiple-hearth incinerator in addition to the following considerations:

   a. Pursue an agreement with the Town of Haverstraw to accept the ash from RCSD#1 and Orangetown at the Town landfill in exchange for providing incineration capacity at one or both incinerators for Haverstraw's sludge.

   b. Orangetown should consider replacing existing vacuum filter equipment with dewatering equipment capable of producing at least 25 percent solids (belt press). This retrofit should prove to be cost effective and result in additional incinerator capacity.

   c. The Village of Suffern, which also produces a "contaminated" sludge, should consider joining the RCSD#1 and Orangetown incineration plans. The Village's composting facility is operating without a NYSDEC permit and the potential uses of a "contaminated" compost are severely limited.

3. Recommendation 2c for Westcheter County should be implemented in Rockland.

4. If a regional integrated site is developed, Rockland County should be involved because:

a. Upgraded sludge quality in the county could permit Rockland's participation in any land application or composting program.

b. Landfill capacity could be available for Rockland's incinerator ash as well as to provide a disposal option backup.

5. Rockland County produces a large quantity of sludge which is precluded from land application or composting, and landfill capacity is severely limited. The discussions initiated by EFC with USEPA in regard to upstate counties participating in a short term ocean disposal program should be continued and expanded to include a joint Rockland-Westchester program. A delay in constructing an incinerator for RCSD#1 could have severe consequences in light of the increased sludge generation expected. Plans for a short term ocean disposal program in cooperation with Westchester County could prove beneficial, providing USEPA approval can be obtained.

SULLIVAN COUNTY

Sullivan relies principally on landfilling to dispose of nearly all sludge generated in the county. This is a problem for several small plants as they have no dewatering process to achieve the 20 percent solids concentration required for landfilling sludge. The closing of the Merion Blue Grass Sod Farm severely hampered sludge disposal opportunities for four of the plants lacking dewatering facilities. Sullivan County plans to take whatever steps may be necessary to upgrade the County landfill to comply with current NYSDEC solid waste regulations. This will require leachate collection, groundwater monitoring, and a liner system. EFC believes the county landfill has the capacity to mix all sludge generated in the county with refuse coming into the landfill on an annual basis. However, on a day-to-day basis, problems may be encountered in obtaining an adequate mixing ratio. This could be resolved by creating a stockpiling area for dewatered sludge at the landfill or by developing a schedule for receiving sludge at the landfill.

Data characterizing sludge quantity and quality in Sullivan County is particularly poor. The total quantity of sludge generated in the county agrees with EFC's projected estimate. However, individual quantities appear to depart substantially from estimated quantities. Only three plants in the county have quality data; two of these three plants have poor quality sludge.

Recommendations

1. Sullivan, along with Ulster County, has a high proportion of cropland to sludge and septage generated and appears to have the best opportunity in the region to implement a countywide land application program. As shown in Table 24, land application of all sludge and septage generated in Sullivan would require only 2.6 percent of the cropland available in the county. To further investigate the feasibility of such a program, a concerted effort must be made to adequately characterize sludge quantity and quality in Sullivan County.

2. The County's plan to upgrade the landfill appears to be a good approach as no other opportunities may be available for refuse disposal. EFC recommends that sludge be applied to land and that landfill space be reserved for other, non-recyclable materials. If the landfill site is expandable, the Sullivan County landfill could provide landfill support for the "integrated site" concept discussed in Long Term Recommendations.

3. Smaller plants lacking dewatering and stabilization processes should truck their liquid sludge to the closest plant able to stabilize it for land application, and dewater it, if landfilling is unavoidable.

ULSTER COUNTY

With the exception of two small composting operations, Ulster presently uses lagoons and STPs to dispose of septage and town landfills to dispose of sludge generated in the county. Plans are to construct a mass burn resource recovery facility for refuse over the next five years and to landfill sludge with the ash from that facility. At this time, sludge will not to be incinerated with refuse at the Ulster facility.

The trend in septage disposal in Ulster is to continue to increase the amount going to STPs until this is the sole method of septage management. This approach is consistent with EFC's recommendations for septage management.

Recommendations

1. The County should closely examine its decision not to co-incinerate refuse and sludge. The apparently successful co-incineration program in Glen Cove, New York, is a case where this approach seems to be effective. Incineration of sludge will produce additional energy, will reduce the amount of material going to the ashfill, and will reduce the amount of leachate to be managed and treated at the ashfill.

2. The plan to landfill sludge with ash avoids many of the problems associated with land application and composting: health concerns, public perception, and multiple site management. However, sludge disposal via landfill fails to use the energy and nutrient value inherent in sludge. Ulster should, at least on a small scale, implement a land application or composting program or both so the landfill approach is not without backup. Information provided by NYS Department of Agriculture and Markets indicates that approximately 53,000 acres of cropland are available in Ulster County. At a conservative land application rate of two dry tons per acre, only 1.6 percent of this cropland would be required to manage all "clean" sludge generated in the county.

The Ulster County technical representative was reluctant to consider a land application program because:

a. The available cropland figure may be greatly inflated.

b. Cropland in Ulster County is rapidly being converted into residential property.

c. Much of the cropland in Ulster is used to grow food for direct human consumption; this would preclude sludge application on those crops.

3. Ulster anticipates that at least four of the existing town landfills will remain operable until the resource recovery facility and ashfill are operational. At the time of this writing, NYSDEC has not indicated its willingness to issue consent orders keeping the landfills open. The County should discuss this matter in greater detail with NYSDEC when information concerning the results of groundwater monitoring of the existing landfills are available.

WESTCHESTER COUNTY

Westchester presently uses both the lowest level technology (ocean disposal) and the highest level (incineration) available for sludge disposal. Approximately one-third of the sludge generated in the seven county region is barged to sea from the Yonkers sewage treatment plant. The New Rochelle and Ossining treatment plants incinerate sludge on-site.

Recommendations

1. While ocean disposal fails to make adequate use of the inherent nutrient or energy value of sludge, this approach appears to offer the most cost effective option ($109/dry ton) as well as the simplest technological approach to sludge disposal--dumping undewatered, unstabilized sludge. As negative environmental effects of ocean disposal at the 106 mile site have yet to be determined, the county should continue to use this option until prohibited by federal regulations.

2. Because ocean disposal may be a relatively short term option (three to five years), several parallel aproaches to sludge disposal should be developed:

a. Consider retrofitting the county's existing mass burn resource recovery facility at Peekskill to co-dispose of sludge. This should be done as a pilot project with facilities for dewatering sludge to at least 25 percent solids by belt press developed at either the Yonkers plant or the Peekskill facility.

b. Treatment of the county's entire municipal waste stream, both refuse and sewage sludge, should be considered as part of any plan to expand mass burn facilites. Adequate technology is available to effectively burn sludge with refuse if such a system is properly designed and operated.

c. USEPA studies demonstrate that treatment efficiencies in sludge incinerators can be increased by up to 93 percent by retrofitting existing incinerators with combustion control equipment and belt presses for enhanced sludge dewatering. This retrofit approach should be studied by all municipalities operating sludge incinerators in the county. Not only would operating costs be drastically reduced, but excess capacity would become available for use by other municipalities within the county or region.

d. The county should foster and support any effort toward a regional disposal facility or facilities to have an option for the future should ocean disposal be eventually limited or prohibited.

SECTION 8. PUBLIC COMMENTS

A number of comments on the draft study were received and reviewed by EFC. Changes have been made directly to the text to accommodate editorial or strictly technical comments. Comments more conceptual in nature are reprinted here for the reader's information.

Commenters

Hudson Valley Regional Council
Orange County
Ulster County
Sullivan County
Putnam County
NYSDEC Central Office, Albany
NYSDEC - Region 3
Henningson, Durham and Richardson

COUNTY OF ULSTER

BOX 1800
KINGSTON, NEW YORK 12401

HEALTH DEPARTMENT
300 Flatbush Avenue
Peter D. Corsones, M.D.
Commissioner of Health

DEAN N. PALEN, P.E.
Director of Environmental Sanitation
914-338-8443

MEMORANDUM

DATE: October 8, 1986

TO: Terence P. Curran, P.E., Executive Director
New York State Environmental Facilities Corporation

FROM: Dean N. Palen, P.E.
Director of Environmental Sanitation

SUBJECT: Study of Sludge Management Alternatives for Seven Counties in the Hudson Valley (Draft 7/31/86)

After reviewing the above referenced document, I offer the following comments:

1. That a permanent regional sludge management task force should be created.

2. That this task force should be a partnership between local government, state government, the State Legislature, the Governor's Office and the private sector.

3. That representation on the task force should be extended to a wastewater treatment plant operator, a septage hauler, a policy making representative from the New York State Department of Environmental Conservation, a State Legislative representative, a representative from the Governor's Office and a representative from industry.

4. That better septage/sludge quality data is needed to select disposal methods that will be permitted by the State of New York.

5. That the present regulations and regulatory trends, Section 4, should be updated quarterly.

DNP:d

cc: file

JAMES GORMAN
CHAIRMAN
LEON SIEGEL
VICE CHAIRMAN
PAUL A. ROUIS, JR.
COUNTY ADMINISTRATOR

SULLIVAN COUNTY
BOARD OF SUPERVISORS
SULLIVAN COUNTY GOVERNMENT CENTER
MONTICELLO, NEW YORK 12701
TEL. 914-794-3000
EXTENSION 200

September 30, 1986

Mr. Terence P. Curran, P.E.
Executive Director
New York State Environmental Facilities Corporation
50 Wolf Road
Albany, NY 12205

Dear Mr. Curran:

Sullivan County held a public hearing on the "Sludge Management Alternatives For the Seven Counties in the Hudson Valley" on September 3, 1986. The County wishes to commend the Environmental Facilities Corporation for its work on this project. It is obvious that a great deal of research and time went into the completion of this report.

The County concurs with the New York State Environmental Facilities Corporation and the majority of its findings. It is essential that counties determine the quality of sludge generated so that plans can be more narrowly focused as to how to dispose of this waste. Municipal and private sewage treatment plant operators should be strongly encouraged to undertake sludge quality testing programs. Municipalities should also be encouraged to make provisions to accept septage waste from private home systems. The concept of a centrally located integrated site is also favored by Sullivan County. Such a site can dispose of sludge through various means.

Finally, Sullivan County believes it is important for the Department of Environmental Conservation (DEC) to clearly state its position in regard to the land spreading of sludge. It was recommended that Sullivan County land spread the majority of its sludge. This, however, could be difficult for the County to undertake if the DEC has strict regulations against land spreading on steep slopes.

SULLIVAN COUNTY IS AN EQUAL OPPORTUNITY AFFIRMATIVE ACTION EMPLOYER

I hope these comments are of assistance to you as you rewrite the draft study. Thank you for allowing Sullivan County to state its views regarding this study.

Very truly yours,

David Kaufman, Chairman
Supervisors' Committee on
Planning, Economic
Development, Public
Information and Publicity

Diane V. Carlton

Diane V. Carlton
Senior Land Use Analyst
Department of Planning
and Economic Development

DK/DVC/mtg

PUTNAM COUNTY EXECUTIVE
Two County Center
Carmel, New York 10512
Tel. 914/ 225-3641

DAVID D. BRUEN
County Executive

October 9, 1986

Mr. Terence P. Curran, P.E.
Executive Director
New York State Environmental Facilities Corporation
50 Wolf Road
Albany, New York 12205

SUBJECT: Draft Septage/Sludge Report

Dear Mr. Curran:

As a participating County in the development of the subject report, we have been pleased to cooperate in this attempt to find a regional solution to the septage and sludge disposal problem.

Having reviewed the draft report, we have several comments; some of which are recommended changes which should be included as the draft is revised into a final report.

1. We concur with the management recommendations as set forth in the report.

2. We agree that the first step in designing sludge handling facilities should be obtaining more accurate data on sludge quantity and quality, however, the below should be considered in this regard.

   a. Exact quantities will be difficult if not impossible to determine since the majority of sludge is disposed of as septage and sewage treatment plant sludge production records are not readily maintained. The time spent in attempting to gather such data can be better utilized in other areas. It is our opinion that quantity should be estimated based on population.

   b. Sludge quality should be obtained by sampling sludge at the larger sewage treatment facilities. A size cutoff should be set with all facilities above that size sampled. Recognizing the difficulty in gaining cooperation on behalf of treatment plant owners, and the need for the analyses on a timely basis, it is suggested that the Counties pay the cost of the analyses. A meeting for all seven counties should be set up with the NYS Department of Environmental Conservation, Solid Waste Division to ascertain the exact sampling requirements, i.e., constituents to be measured and sampling protocols.

3. While we agree that retrofitting existing sewage treatment facilities to allow acceptance of sludge is an alternative we do not feel in reality that such a solution can be implemented due to the poliical complexities involved. We feel that a new regional site is more desirable, and practical.

Please contact me if we can be of further assistance.

Very truly yours,

David D. Bruen
County Executive

DDB:mk

Henningson, Durham & Richardson Architecture & Engineering, P.C.
In Association with
HDR Techserv, Inc.

Suite 212E
701 Westchester Avenue
White Plains, New York
10604-3087

Telephone:
(914) 328-8505

Solid Waste Management/
Resource Recovery
Pulp & Paper
Utility & Energy

September 30, 1986

Terence P. Curran, P.E., Executive Director
New York State Environmental Facilities Corporation
50 Wolf Road
Albany, New York 12205

Dear Mr. Curran:

Our firm has been engaged by several of the counties in the Hudson Valley to assist them in the implementation of waste-to-energy type resource recovery projects. At least two of these counties are giving serious consideration to coincineration or codisposal of sewage sludge with solid waste. We are therefore concerned that your draft report entitled "Study of Sludge Management Alternative for Seven Counties in the Hudson Valley" seems to present an unduly negative assessment of the potential for codisposal of sewage sludge with solid wastes. Our studies indicate that the main impediments to codisposal are institutional rather than technological and that from an economic point of view, there appears to be a potential for major savings for communities that are faced with both a sludge and solid waste disposal problem.

HDR

We are particularly concerned about your statement on page 204 of your draft report that "NYSDEC is not encouraging applications for codisposal of sludge and, in fact, may not grant permits for codisposal at all in the future". Our discussions with NYSDEC have led us to believe to the contrary that NYSDEC would be supportive of such applications, provided their legitimate concerns are addressed.

Some of our other concerns are summarized in the attached comments. If you have any questions regarding our concerns, we would be pleased to meet with you at your convenience and provide you with additional data.

Sincerely yours,

HENNINGSON, DURHAM & RICHARDSON ARCHITECTURE & ENGINEERING, P.C.
In Association with
HDR TECHSERV, INC.

John L. Rose

John L. Rose, P.E.
Assistant Vice President

Attachment

jlr:srw

COMMENTS ON
DRAFT REPORT
STUDY OF SLUDGE MANAGEMENT ALTERNATIVES

The draft report entitled "Study of Sludge Management Alternatives for Seven Counties in the Hudson Valley" prepared by the New York State Environmental Facilities Corporation and dated July 31, 1986, contains a number of references to the potential for disposing of sludge together with solid wastes (coincineration or codisposal) which seem to present an unduly negative assessment of the state-of-the-art of the technology of coincineration.

The discussion of coincineration as a technical alternative is properly part of the general discussion of thermal reduction processes for sludge disposal. The draft report is correct in stating that "planning and implementation.... is often hampered by institutional differences". However, the discussion of the technical approaches does not seem to address the state-of-the-art of codisposal. "Conventional refuse incinerators", which could have problems handling sludge, are not defined. Today's state-of-the-art waste-to-energy plants like the one now operating in Peekskill, Westchester County, can handle significant quantities of dewatered sludge without significant adverse impact on combustion.

The key lies in first dewatering the sludge using conventional sludge dewatering techniques such as filter presses to produce a sludge cake with at least 25% dry solids (less than 75% moisture), and then further drying the sludge before introducing it into the main combustion chamber. Several systems for this drying process are available commercially, based on operating experience in European plants. Generally, using flue gases as a source of heat and recirculating partially dried sludge seems to have been most successful. As indicated in the report on page 99, "this method has been relatively successful". Corrosion in the dryers can be controlled, in part by the choice of the preliminary dewatering process. Odors can also be controlled by returning all gases that have been in contact with sludge to the main combustion chamber.

The listing of U.S. conincineration facilities in Table 28 is misleading and to some extent out of date. Many of the facilities listed were only pilot or demonstration plants and were never intended for permanent commercial operations. Some were shut down because of their inability to meet current emission standards and not for reasons related to coincineration.

The discussion of economic and institutional considerations makes some valid points and some that seem less valid. Citing a 1976 study by Weston, the report states the coincineration had the lowest annualized cost of all combustion technologies, but then warns that the costs still could be prohibitive to many municipalities. This misses the point. If a municipality is contemplating building both a refuse and a sludge disposal facility, it is clear that a coincineration facility is more economic than separate facilities. Furthermore, if the costs of the

coincineration facility are so allocated to refuse and sludge that the refuse tipping fee is held constant, the cost of sludge disposal is only a fraction of what it would be, if a separate sludge facility had been built. Other allocations are possible so that both the refuse and sludge disposal functions benefit from codisposal.

Discussing the institutional factors, the report correctly concludes that these often serve to discourage combined disposal, particularly when refuse disposal is carried out by the private sector. However, the recent change in federal tax laws appears to be driving refuse disposal towards the public sector, and the possible availability of state and federal grants could provide a major economic incentive to coincineration.

The discussion of the characteristics of the ash residue fails to take into consideration the impact of acid gas emission control devises on residue and leachate composition. In general, such control devices will tend to make the residue and leachate more basic and will thus reduce the concentrations of metals in leachate. Also, USEPA is proposing new tests to evaluate the toxicity of leachate. The tests may make it more difficult to dispose of incineration residues in sanitary landfills although the most recent data shows the actual leachate produced by residue from plants with acid gas controls is relatively benign.

The discussion of future NYSDEC policy needs both expansion and clarification. We do not believe that the statement that "NYSDEC is not encouraging applications for co-disposal of sludge and, in fact, may not grant permits for codisposal at all in the future" is a correct statement of current NYSDEC policy. We are involved in several refuse incineration projects in the Hudson Valley area and have discussed the potential for codisposal with NYSDEC for these projects. It is our impression that NYSDEC would look favorably on permit applications for codisposal, provided that the application addresses those issues which are of concern to NYSDEC. It is therefore our opinion that coincineration or codisposal is a very real option for those counties in the Hudson Valley area which have both a sludge and a refuse disposal problem.

THE FOLLOWING COMMENTS ARE EXCERPTED FROM A NYSDEC MEMORANDUM TO EFC:

New York State Department of Environmental Conservation

MEMORANDUM

TO: Ken Malcolm, EFC
FROM: Joseph Stockbridge, Residuals Management Section
SUBJECT: EFC Lower Hudson Valley Seven County Study

DATE: October 24, 1986

Integrated Site: One centralized site to implement 4 options: land application, landfill, composting and incinerator for 7 counties may not be cost-effective due to the likelyhood of high transportation costs. The concept of centralized or regional management is more important than that of a single centralized site.

General Recommendations by Alternatives

Land Application: The number of samples to be taken in 6 month period depends upon the size of each STP. (Details are outlined in the Solid Waste Management Facility Guidelines Section 7.71.1(1)). This proposed sampling program combined with the existing NYSDEC database on sludge quality for Region 3 can provide a good estimate on the quality of sludge generated in this Region. In addition to the sludge quality, the topographical conditions of the site, the availability of land and the opinion of the public are among the important factors to be considered and studied for each county in order to have a successful land application program.

Composting: Implementing this option on a limited or pilot scale may not be necessary. Composting should be considered as viable a disposal option as other traditional disposal methods. Public acceptance, odor control and cost-effectiveness may be the most important factors when composting option is considered, not the availability of markets for compost or the market value of compost as suggested.

Ocean Disposal: Ocean dumping is primarily chosen because it is a relatively low-cost disposal option. However, a result of the current and projected requirements related to hauling sludge to 106 mile site and permitting and site monitoring will substantially increase the cost of ocean disposal programs. These costs tend to make ocean disposal most feasible for large municipalities only.

Incineration: A necessary alternative at this time.

Recommended For Each County

The recommendations for each county are generally non-specific. It is important to develop specific sludge disposal alternatives for the County's POTW's and Septage Haulers to implement.

Dutchess County- Since the majority sewage sludges generated by the POTW's within the County are low in concentration of contaminates, beneficial reuse alternatives should be primarily stressed. An evaluation of the logistics of where the sludge is generated verses where potential landspreading or composting sites are located and potential markets for compost is needed. What sludges are proposed to be dewatered and incinerated at the Arlington or Beacon Incinerators? After the sludge is incinerated where will the ash be disposed?

Orange County- The quality of the sludges generated within the County varies greatly. It is appropriate to diversify in the disposal or reuse alternatives evaluated to allow the maximum flexibility to acceptably handle these differing quality wastes. Since OCLF is looking at a relatively limited site life, it is appropriate at this time for the county to re-evaluate the dewatering and disposal options which may be implemented prior to the closure of the existing landfill. If the Newburgh incinerator is to be re-activated the disposal of the ash should be evaluated.

Putnam County- It appears that septage and sludge disposal will not be viable within the county within the relatively near future. Specific alternatives for each of the POTW's and septage haulers needs to be evaluated.

Rockland County - Recommendation #1 is exceptionally appropriate. The POTW's within the county have a significant problem regarding sludge quality which will constrict the viable alternatives. These alternatives will likely be only incineration and/or landfilling. Siting of these facilities to minimize hauling costs and maximize the countywide use of the facility should be undertaken.

Sullivan County - Development of specific recommendations for sludge or septage treatment at POTW's within the county is appropriate. The viability of landapplication of sludge is not known due to a lack of sludge quality data. Until this is rectified landfilling will likely predominate.

Ulster County - Ditto Sullivan County.

Westchester County - Development of long-term sludge and septage disposal programs in advance of a disposal crisis is necessary. Since 71% of the County's sludge is presently disposed by Ocean dumping and the long-term viability of this method is uncertain, specific alternatives for disposal of these wastes should be investigated.

Conclusion: In general terms, this report identifies several areas which have or will have a disposal site shortage. It also

identified a lack of substantiated quality and quantity information upon which to undertake alternatives analysis. The report was too generic to allow the counties to implement a specific course of action to resolve the disposal problem without additional facility planning investigations. It is appropriate to proceed to the next step, which would be the development of regional, county or facility recommendations to enable the "disposal crisis" to be resolved.

NOTE: These comments are excerpted from a NYSDEC (Albany) Memorandum.

DATE DUE

GAYLORD No. 2333 PRINTED IN U.S.A.

NOAA COASTAL SERVICES CENTER LIBRARY

3 6668 14108 4998