Virginia Marine Resources Commission

Permit Compliance and Inspection Program

Final Report
CZM Grant NA270Z0312-01 Task 9

December 1993

"This report was funded, in part, by the Virginia Department of Environmental Quality Coastal Resources Management Program through Grant #NA270Z0312-01 of the National Oceanic and Atmospheric Administration, Office of Ocean and Coastal Resources Management, under the Coastal Zone Management Act of 1972 as amended."

AUTHENTICATED
U.S. GOVERNMENT
INFORMATION
GPO

Introduction

The Virginia Marine Resources Commission ("Commission" or "VMRC"), as provided in Chapter 12 of Title 28.2 of the Code of Virginia, is the State agency responsible for issuing permits for encroachments in, on, or over State-owned submerged lands throughout the Commonwealth. The Commission has possessed this regulatory authority since 1962, and currently processes approximately 2,000 applications, and issues nearly 500 permits annually. Virginia is only one of six "low water states" and maintains ownership of all submerged lands channelward of the mean low water mark in tidal waters, and regulatory authority channelward of the ordinary high water mark on most naturally occurring nontidal perennial streams.

In addition to managing the Commonwealth's 1,472,000 acres of submerged lands, the Commission also regulates the use or development of tidal wetlands and coastal primary sand dunes pursuant to the provisions of Chapters 13 and 14 of Title 28.2 of the Code of Virginia. Local governments are provided the option to adopt and locally administer a model ordinance. Thirty-five localities have elected to do so. VMRC maintains original jurisdiction in the remaining eleven "Tidewater" localities which have not adopted the model wetlands and dunes ordinances. Even if locally adopted and implemented, the Commission retains certain oversight responsibilities and reviews all decisions made by those local wetlands boards.

The regulatory activities conducted by the Commission and the 35 local wetlands boards are integral core components of Virginia's approved Coastal Zone Management Program. The permit review processes used by the Commission and these local wetlands boards ensures that necessary economic development is permitted in a manner which minimizes adverse impacts to the valuable natural resources within our coastal zone.

Permit compliance is a mandatory component of any effective regulatory program. As such, it is essential that the terms and conditions contained in the permit documents be followed if, the full benefits of any regulatory program are to be realized. Without such permit compliance, the regulatory process breaks down and serves only to increase bureaucracy.

In order to evaluate compliance with permits issued by VMRC and local wetlands boards a survey, funded in part by CRMP grant #NA90AA-H-CZ96, was conducted in 1991 (Exhibit A). The compliance survey was designed to investigate and gauge the effectiveness of the various compliance monitoring programs currently utilized by VMRC and local wetlands boards. The survey was intended to both identify existing compliance shortcomings and to ascertain effective compliance monitoring techniques in order to develop concise recommendations to enhance compliance monitoring programs.

The purpose of the grant project was to implement the recommendations of the 1991 Permit Compliance and Inspection Program report and institute a standardized permit compliance program for permits issued by the Commission in the Coastal Zone,

HJ 3370 .V57 1996 c2

and assess permit compliance for projects authorized in 1990 and 1991. The latter was designed as a follow up to the compliance inspections conducted during the 1991 study for projects permitted in 1989.

This document is intended to serve as the final report for Task 9 of Grant No. NA270Z0312-1 and provides an overview of the steps taken to initiate the compliance monitoring program and a review of the compliance data gathered during the grant year.

Permit Compliance Program

In the December 1991 Habitat Management Division - Special Report (Exhibit A), five recommendations were made for VMRC to enhance permit compliance efforts.

1. Require detailed drawings for all projects requiring a VMRC permit.

2. Require accurate benchmarks or reference points on the plan view drawing(s).

3. Require Engineers to take an adequate number of slides during the initial site visit to illustrate pre-construction conditions.

4. Require Engineers to conduct post-construction inspections at all sites permitted by VMRC.

5. Incorporate the data collected from the post-construction inspections into the Habitat Management Divisions existing computer data base.

These recommendations were incorporated into the Commissions compliance monitoring program through several mechanisms. The Joint Permit Application (Exhibit B) was amended to reflect the need for more detailed drawings with accurate benchmarks. New conditions were incorporated into Commission permits requiring that a permit placard (Exhibit C) be posted at the project site and procedures were established for the Commission to receive notice when project construction is started. The latter was accomplished through the use of a self-addressed stamped card (Exhibit D) which is returned to the Commission, by the permittee. Special conditions related to permit compliance have been added to all permits issued by VMRC. Examples of these can be found in the attached sample permit (Exhibit E).

In addition, an interim compliance data base was established to track compliance monitoring efforts and results. While this data base is currently separate from the Habitat Management Division's permit tracking system, the Division has contracted with the Virginia Institute of Marine Science to update and modify our computerized permit tracking system. The new system will enable us to incorporate compliance data into each permit file. The initial software for this change has been delivered to VMRC and it is anticipated that the new system will be available for use in mid-1994.

Furthermore, procedures have currently been established within the Habitat Management Division to require that the Division's Environmental Engineers inspect all permitted projects. These procedures require that photos be taken of the site both before and after construction, and that the final inspection be documented through use of a Project Compliance Assessment Report (Exhibit F).

Permit Compliance Surveys

In addition to implementing the above recommendations, a representative sample of new data from those projects which were permitted in 1990 and 1991 was added to the 1989 data . This was designed to provide up to date information for continued comparison of the compliance checks.

One hundred and fifty projects were randomly selected from applications processed for permits in 1990 and 1991. Applications not involving a permit, or involving a private pier, or subaqueous dredging were excluded. This resulted in 131 applications being selected for 1990 and 136 for 1991. These figures were determined to be adequate to represent compliance rates for all permits issued during a given year. Because permit activity in a given area or locality over a particular year is variable, no effort was made to ensure that all localities were represented. Instead, it was anticipated that the random sample would result in a sample group which more accurately reflected the average permit activity per locality.

Table (1) indicates the number of projects reviewed in each locality. Thirty-three Tidewater localities are represented over the three year period. Two hundred and fifty-seven of the projects required wetland permits, sixty subaqueous permits, and sixty-nine required both jurisdictional permits. This represents a review of a total of three hundred and eighty-seven permits.

Follow-up site inspections were made of all the selected projects to determine the degree of compliance. Results of the compliance inspections were grouped into the same five categories as the 1989 sample:

1. Project not constructed
2. Unable to determine compliance
3. In compliance with the permit document
4. Moderately in compliance - (the average additional encroachment did not exceed 6 inches greater than the permitted alignment, and had length and square foot measurements which were no more than 10% greater than that authorized.
5. Out of compliance - (the average additional encroachment exceeded 6 inches and the measurements were greater than 10% authorized.)

Table 1
Number and jurisdictional type of project selected for the compliance survey in each locality.

Locality	Rural/Urban	Project #	Project Type
		Year	
		89 90 91	
Accomack	Rural	15 11 5	5S,21W,5B
Charles City	Rural	0 2 1	1S,1W,1B
Chesapeake	Urban	4 5 3	2S,10W,0B
Chesterfield	Rural	0 1 0	0S,0W,1B
Essex	Rural	1 4 3	4S,2W,1B
Fairfax	Urban	1 1 1	1S,2W,0B
Gloucester	Rural	3 6 8	1S,12W,4B
Hampton	Urban	5 3 8	5S,11W,0B
Hanover	Rural	0 1 0	1S,0W,0B
Isle of Wight	Rural	0 0 2	2S,0W,0B
James City	Urban	3 3 1	0S,7W,0B
King and Queen	Rural	1 0 3	1S,2W,1B
King George	Rural	1 2 2	2S,3W,0B
King William	Rural	1 1 1	0S,1W,2B
Lancaster	Rural	9 15 9	3S,26W,4B
Mathews	Rural	3 3 9	0S,10W,5B
Middlesex	Rural	8 7 10	3S,17W,5B
New Kent	Rural	0 1 0	1S,0W,0B
Newport News	Urban	0 4 5	3S,4W,2B
Norfolk	Urban	8 8 7	5S,15W,3B
Northampton	Rural	1 3 1	1S,4W,0B
Northumberland	Rural	19 14 8	1S,37W,3B
Poquoson	Urban	1 2 4	1S,6W,0B
Portsmouth	Urban	0 0 5	1S,2W,1B
Prince William	Urban	1 1 0	0S,1W,1B
Richmond Co	Rural	0 1 3	2S,0W,2W
Stafford	Urban	3 4 3	2S,4W,5B
Suffolk	Rural	1 0 1	0S,1W,1B
Surry	Rural	0 0 1	1S,0W,0B
Virginia Beach	Urban	20 22 15	8S,38W,13B
West Point	Rural	0 0 1	1S,0W,0B
Westmoreland	Rural	7 5 14	1S,4W,3B
York	Urban	4 1 2	1S,5W,1B
Totals			
33 Localities	21 Rural	120 Projects (89)	60 Sub.
S=Subaqueous W=Wetlands B=Both Subaqeous and Wetlands	12 Urban	131 Projects (90)	257 Wet.
		136 Projects (91)	69 Both

The results of the sampling have been summarized and may be found in Table 2. As with the 1989 study, the results were subdivided into rural and urban areas, in an attempt to evaluate any demographic differences in compliance levels. Rural areas were defined as those areas possessing population densities of less than 140 per square mile; while urban localities were defined as having population densities greater than 140 per square mile (1980 census). This breakdown was the same for the 1991 grant study and for purposes of consistency was maintained.

Table 2
Percentages of constructed projects categorized by their level of compliance.

	1989			1990			1991		
	Total	Urban	Rural	Total	Urban	Rural	Total	Urban	Rural
# of Projects Reviewed	120	50	70	131	54	77	136	54	82
% of Projects Reviewed		42%	58%		41%	59%		40%	60%
# of Projects Constructed	98	43	55	109	45	64	113	40	73
% of Projects Reviewed	82%	86%	79%	83%	83%	83%	83%	74%	89%
# in Compliance	50	26	24	51	26	25	54	19	35
% of Projects Constructed	51%	60%	44%	47%	58%	39%	48%	48%	48%
# in Moderate Compliance	14	6	8	21	10	11	23	14	9
% of Projects Constructed	14%	14%	14%	19%	22%	17%	20%	35%	12%
# Out of Compliance	8	2	6	4	1	3	7	0	7
% of Projects Constructed	8%	5%	11%	4%	2%	5%	6%	0%	10%
# Compliance Indeterminable	26	9	17	33	8	25	29	7	22
% of Projects Constructed	27%	21%	31%	30%	18%	39%	26%	18%	30%

For the most part the same trends observed in the 1989 study are reflected in the figures for 1990 and 1991. Since these figures represent projects that were permitted prior to the publication of the recommendations from the 1991 study, it is not unexpected that there should be little change. However, it is encouraging to see that there were no projects out of compliance in urban areas for 1991.

In addition to the inspections conducted on projects permitted in 1990 and 1991, inspections were also performed on projects permitted by VMRC during the grant year following implementation of the standardized compliance program described above. To date 36 projects have been inspected and of those, 64% have been found to be in compliance. Only one project was found to be out of compliance and five projects were within the moderate compliance category. Figure 1 depicts the number of permits checked, in the latest effort, and a breakdown of the number of projects constructed and their degree of compliance.

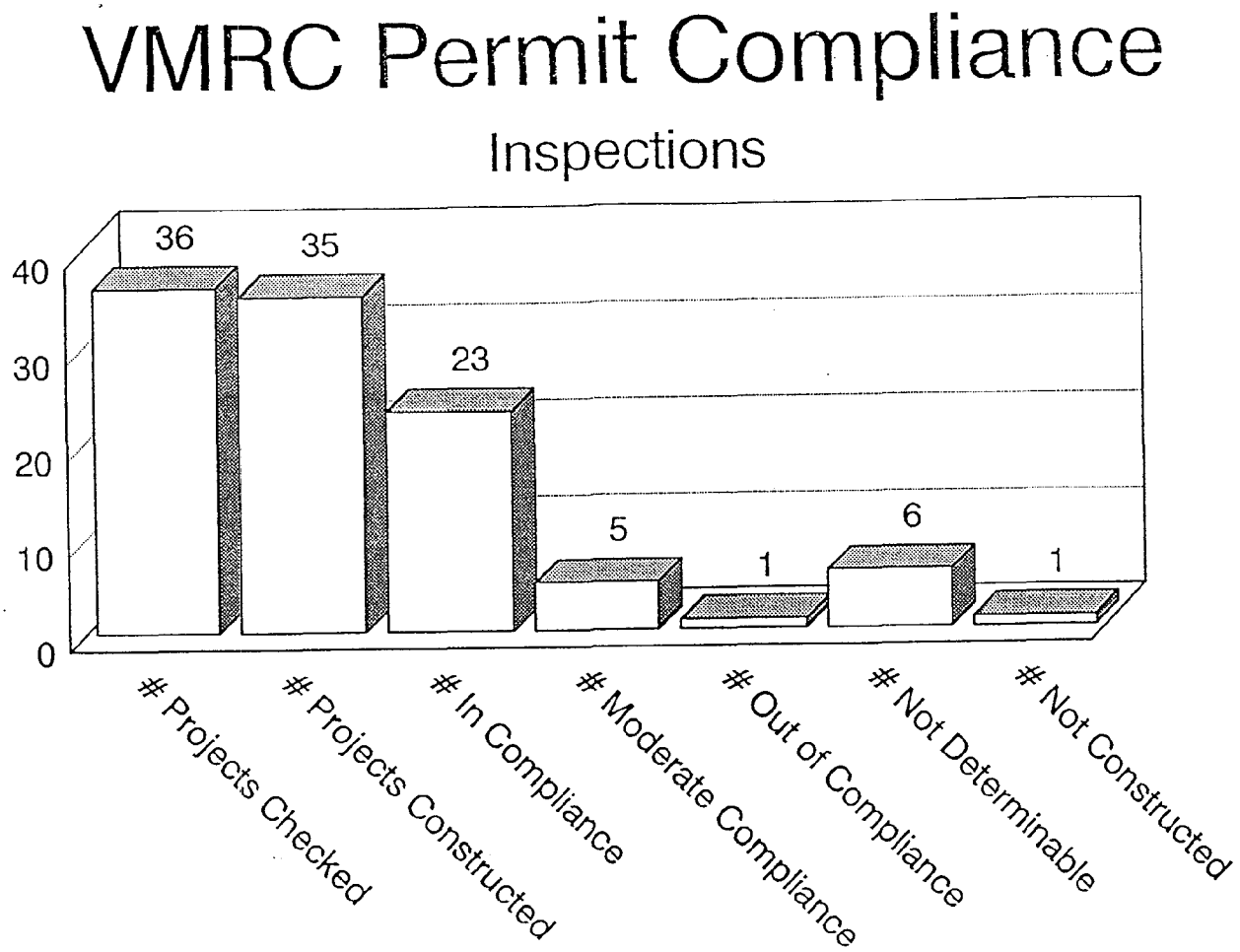

Figure 1

Conclusion

At this point, the implementation of a standardized compliance monitoring program for projects permitted by VMRC appears relatively successful. It may be too early, however, to see if any substantial changes will need to be made to improve the program which remains funded for the next grant year. On a positive note the Habitat Management Division has purchased a boat with general funds to inspect dredging projects for which compliance could not previously be monitored.

For projects permitted by local wetlands boards, it appears more compliance data will need to be gathered before we can finalize recommendations that would direct our efforts towards specific areas or project types. On the other hand, it does appear that certain urban localities have developed adequate procedures, or have provided sufficient staff resources to ensure compliance with their permits. Furthermore, even if a local government had incorporated the 1991 report recommendations in their entirety into their procedures, it is likely that any results would just now begin to be seen. As a result, continued monitoring for compliance of local wetlands board permits appears necessary, and a standardized compliance monitoring program for wetland permits may need to be initiated.

EXHIBIT A

Habitat Management Division - Special Report
December 1991

Permit Compliance and Inspection Program: Findings and Guidance Document

Robert C. Neikirk

INTRODUCTION

The Virginia Marine Resources Commission ("the Commission" or "VMRC"), in conformance with Section 62.1-3 of the Code of Virginia, is the State agency responsible for issuing permits for encroachments in, on, or over State-owned submerged lands throughout the Commonwealth. The Commission has possessed this regulatory authority since 1962. We currently process over 2,000 applications and issue nearly 500 permits annually. Virginia is a "low water state" and assumes jurisdiction of submerged lands channelward of the mean low water mark in tidal waters, and has regulatory authority channelward of the ordinary high water mark on most naturally occurring nontidal perennial streams.

In addition to managing the Commonwealth's submerged lands, the Commission also regulates certain activities in tidal wetlands and coastal primary sand dunes pursuant to Chapters 2.1 and 2.2 of Title 62.1 of the Code of Virginia. Local governments have the option to adopt and administer the ordinance. VMRC asserts original jurisdiction in those Tidewater localities which have not assumed local regulation through the adoption of the model wetlands and dunes ordinances. Even where locally adopted and implemented, the Commission retains oversight responsibilities for all decisions made by those local wetlands boards.

The regulatory activities conducted by the Commission and the 34 local wetlands boards are integral core components of Virginia's approved Coastal Zone Management Program. The permit review processes used by the Commission and these local wetlands boards ensures that necessary economic development is permitted in a manner which minimizes adverse impacts to the valuable natural resources within our coastal zone.

Permit compliance is a mandatory component of any effective regulatory program. As such, it is essential that the terms and conditions contained in those permit documents be followed if we are to realize the full benefits of the regulatory program. Without such permit compliance, the regulatory process breaks down and serves only to increase bureaucracy.

In July 1990, Senate Bill 183 became law (Ch. 881 Acts of Assembly 1990). This legislation provided the Commission and local wetlands boards with the authority to issue restoration orders and assess civil charges for violations of the applicable subaqueous, wetlands and sand dune statutes. An ability to accurately determine and monitor compliance with permit requirements is essential if the agency and wetlands boards are to effectively carry out the intent of this legislation.

Unfortunately, Commission staff does not currently have a standardized procedure for monitoring permit compliance. Instead, the staff engineer assigned responsibility for a particular locality will attempt to inspect projects which are under construction or have been recently completed. Quite often such compliance inspections are in response to the receipt of an inquiry or complaint. Additionally, the Commission's marine law enforcement personnel are often aware of permitted projects in their localities and occasionally make site inspections during the performance of their daily duties. In either case, however, only a small percentage of the projects permitted by VMRC are routinely inspected for compliance.

Permits issued by wetlands boards are also not always carefully reviewed for compliance upon project completion. Independent studies conducted by Bradshaw (1990), Hershner et al. (1985) and a survey conducted in conjunction with this project indicate that the extent of permit compliance monitoring by local wetlands boards varies between localities. That effort

This report was funded, in part, by the Virginia Council on the Environment's Coastal Resources Management Program through grant # NA90AA-H-CZ796 of the National Oceanic and Atmospheric Administration under the Coastal Zone Management Act of 1972 as amended.

Figure 1. Tidewater Virginia

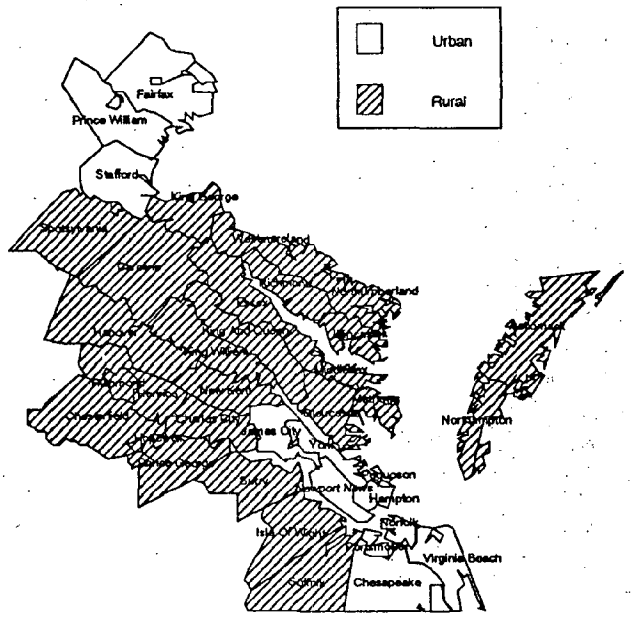

overall effectiveness of permit compliance within the coastal zone, no effort was made to ensure that all localities were represented in the survey. Instead, it was anticipated that the random sample would result in a sample group which more accurately reflected the average permit activity per locality. Therefore, the number of projects reviewed in each locality varies according to the observed permit activity in 1989.

Twenty-three (23) of the 49 Tidewater localities were represented in the sample group. Figure 1 and Table 1 illustrate the Tidewater region and indicate the number of projects reviewed in each locality. Eighty-one (81) of the selected projects required only a wetlands permit, 13 required only a subaqueous permit and 26 impacted both jurisdictions and required subaqueous as well as wetlands permits.

Site inspections were made of all the 120 selected projects to determine the degree of compliance. Results of the compliance inspections were grouped into five categories:

1. Project not constructed
2. Unable to determine compliance
3. In compliance with the permit document
4. Moderately in compliance with the permit document.
5. Out of compliance with the permit document

Categories 1, 2 and 3 were fairly straightforward and easy to assess. The distinction between those projects considered to be in moderate compliance or out of compliance was more difficult to make and became somewhat subjective. As a rule, however, those projects considered to be moderately in compliance possessed an average additional encroachment which did not exceed 6 inches greater than the permitted alignment, and had length and square foot measurements which were no more than 10% greater than that authorized. Those projects exceeding either of the above thresholds were considered to be out of compliance.

As previously mentioned dredging projects were not included in the survey. These projects were excluded because we believed that it would be difficult to distinguish between man-made and natural post-dredging deviations in depth contours. However, recommendations to monitor compliance for dredging projects are included in the Recommendations section of this document.

Results

The results of the survey are summarized in Table 2. You will note that the survey results were subdivided into rural and urban categories. This was done in an effort to ascertain if there were any demographic differences in compliance levels. For the purpose of this study, rural localities were defined as those having population densities of less than 140 per square mile; urban localities were defined as having population densities greater than 140 per square mile. The figures for population density were obtained from the 1980 census by the U. S. Department of Commerce (Univ. of Virginia, 1987). This breakdown was also patterned after that used by Bradshaw (1990) in her compliance monitoring study.

In addition to providing the raw numbers for the projects determined to be in a particular category, Table 2 also provides the percentage of constructed projects which were categorized by their level of compliance. These percentages are particularly interesting when evaluating the results. Especially noteworthy are the percentages of projects in which compliance could not be determined. Figure 2 further illustrates this information.

Figure 3.
Projects categorized by level of compliance. Va. Beach and Norfolk factored indenpendently.

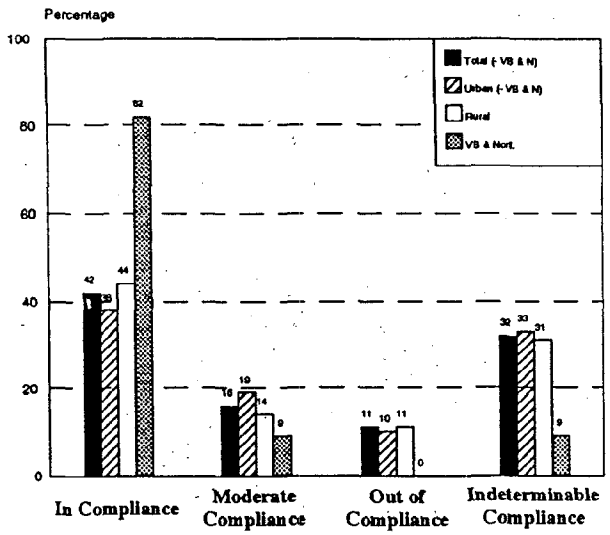

Discussion

A cursory review of the survey results is at first very discouraging. Of all the constructed projects reviewed, only 51% were determined to be in compliance. It is important to note, however, that compliance could not be determined for one reason or another at 27% of the sites visited. The fact that compliance could not be determined does not automatically mean that the projects were not built in conformance with the intent of the permit document.

In fact, it is more encouraging to note that the vast majority of the sites visited even where compliance could not be determined, appeared to have been constructed along reasonable alignments and were often the proper length or width or both. This seems to indicate a general intent to comply with permit requirements. This opinion is further supported by the fact that, of all those projects where compliance could be determined, 89% were determined to be in either total or moderate compliance.

The primary problem identified during the survey was the inability to precisely determine compliance at 27% of the sites visited. Many of the permits did not have adequate drawings or benchmarks to ensure compliance. Additionally, many permits contained ambiguous conditions such as, "approximately" or "as close to the bank as possible", which are by their nature virtually unenforceable. Compliance determinations are made more difficult when the person inspecting the constructed project was not present during the initial site visit and is therefore unfamiliar with preconstruction conditions. Without the aid of precise benchmarks or other means to pinpoint the alignment of a project, compliance determinations are difficult at best and frequently impossible.

As expected, the projects in localities that require more detailed application drawings and information exhibited a higher percentage of determinable compliance. This is illustrated in Figure 3. Compliance could be determined at 91% of the sites inspected in Virginia Beach and Norfolk. Both of these localities require detailed permit drawings with identifiable benchmarks. Both also regularly conduct post-construction compliance inspections. Additionally, Virginia Beach requires professionally engineered project drawings and further requires the permittees to post performance bonds. Those bonds are not released until post-construction inspections have determined that projects are indeed in compliance with the permit granted by the Board.

Not only was compliance usually determinable at the Virginia Beach and Norfolk projects, but the level of compliance was generally higher as well. This is most likely attributed to the regular post-construction inspections. Ninety (90) percent of the projects where compliance could be determined in Virginia Beach and Norfolk were determined to be in compliance and 10% were in moderate compliance. None of the inspected sites were determined to be out of compliance. By comparison, 15% of the sites visited in other localities, were categorized as out of compliance, where compliance could be determined.

Prior to conducting the study, it was anticipated that there would be a marked difference in compliance levels between urban and rural localities. Initially this appeared to be the case. Once Virginia Beach and Norfolk were factored independently from the other urban localities, however, the data revealed very little difference in compliance levels between urban and rural localities.

It appears that the programs being implemented by Virginia Beach and Norfolk are effective in ensuring permit compliance. As a result, the recommendations for improving compliance draw heavily on the examples provided by these localities.

SUMMARY AND RECOMMENDATIONS

The increasing importance of effective compliance monitoring cannot be overstated. Recent legislative changes which authorize VMRC and wetland boards to issue restoration orders and assess civil charges for violations of wetlands, dunes, and subaqueous statutes necessitate compliance programs which can accurately

to the one developed by VMRC. This form may be found as Attachment 2. The worksheet will help to ensure that all the necessary information is gathered during the inspection and will provide a quick reference in the event questions regarding the project arise later. Additionally, the worksheet information should be provided to VMRC for incorporation into the compliance data base. The data base will provide a valuable source of information on compliance and the overall effectiveness of individual wetlands boards.

5. Utilize only enforceable permit conditions and avoid nebulous statements such as "approximately" and "as close to the bank as possible." Instead, the board should negotiate a specific maximum encroachment, length, or amount of impacts should modifications become necessary to satisfy any concerns. If modifications or revisions are agreed to during the public hearing, revised drawings which accurately reflect the modification, including revised benchmark distances, should be required prior to permit issuance.

6. Develop a wetland board placard to be posted by the permittee at all permitted project sites during construction. The placard can serve to aid inspectors and concerned citizens when a project is under construction and problems or questions arise. The placard would provide the name and permit number, making identification and inspection of the project easier. If the locality already requires building permits for all wetland projects, they may wish to avoid duplication and just add the wetland permit number to the placard for easy identification. A sample placard that was developed for VMRC is provided as Attachment 3.

7. Performance bonds can be utilized to provide a financial incentive to comply with wetlands permits. Some boards currently require all permittees to post a performance bond. That bond is not released until a post-construction inspection has determined that the project was constructed in conformance with the permit document. Some boards may determine that bonds are not appropriate for all projects due to low permit activity or the fact that additional man-hours are required to process the bonds.

Bonds are a compliance mechanism that are already provided for in the wetlands law. They are routinely used effectively by a few boards to ensure compliance. The bonds are typically set high enough to provide sufficient funds to undertake restoration in the event of noncompliance. Bonds also provide an additional mechanism for ascertaining when the permitted construction has been completed, since the permittee will typically call for a compliance inspection soon thereafter in order to have his bond released. Whether or not the board develops a performance bond policy for all projects, performance bonds should be considered as a valuable tool to ensure compliance on projects of special concern.

Recommendations VMRC Should Consider to Enhance Compliance Efforts

Virginia state agencies are also currently operating within strict fiscal constraints. In addition, all agencies continue to explore ways to streamline the permitting process. As a result, it is especially important that any new compliance enhancement policies not result in additional burdens on VMRC's financial resources nor result in unnecessary additional requirements imposed on the applicant. The following recommendations are made with this in mind and are typically policy and procedural type changes rather than an imposition of new requirements on the applicant. Many of the recommendations for VMRC are similar to those noted for wetlands boards.

1. Require detailed drawings for all projects requiring a VMRC permit. Staff engineers should utilize the drawings checklist found in the Joint Permit Application in their initial review of each application to determine completeness. Areas where insufficient data was provided should be conveyed to the applicant with the acknowledgement letter. Incomplete applications should not be processed. If adherence to this policy fails to provide the anticipated results, the Commission may wish to consider adopting a regulation that requires professionally engineered drawings be submitted on all commercial projects, or for projects exceeding a certain threshold of impact or value. In the event an engineer can clearly determine from the available information that a VMRC permit will not be required, additional information to satisfy this policy would not be necessary.

2. Accurate benchmarks or reference points should be required on the plan view drawing(s) of all projects requiring VMRC authorization. Accurate distances from the benchmark to each end, and angle of the structure or impacted area should be mandatory. These distances should be routinely checked during the initial site visit. If benchmarks are impractical for a certain project, it may be necessary to have the applicant stake the impacted area. If staking is utilized, the engineer should take an adequate number of slides to accurately document the proposed alignment. This may well be the case for dredging proposals.

Attachment 1

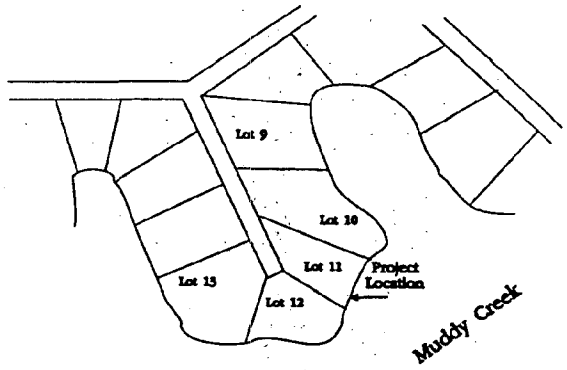

Site Map

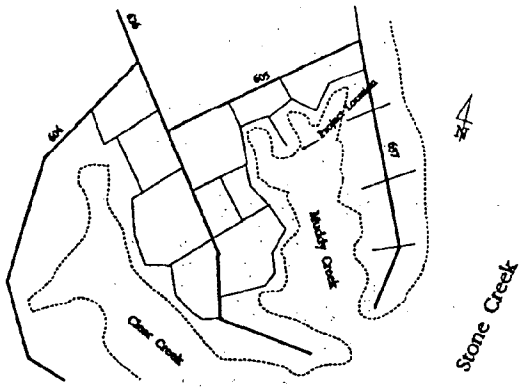

Vicinity Map

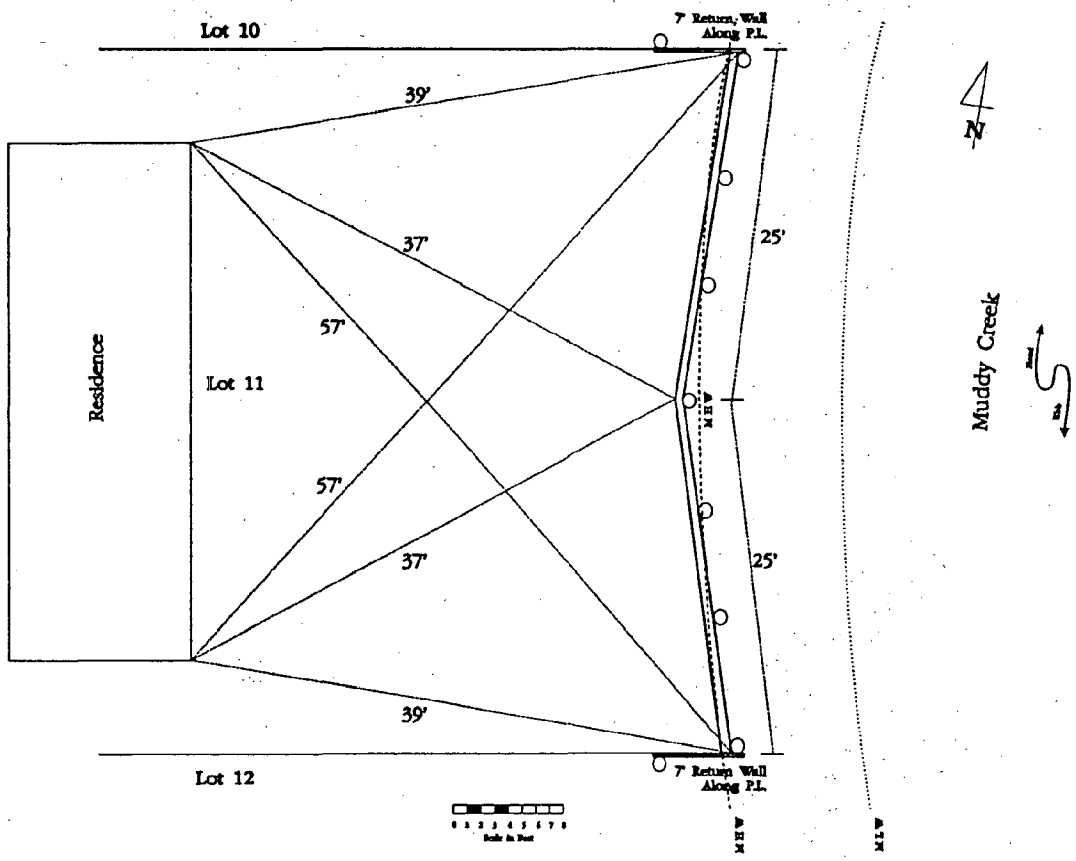

Datum: MLW Adjacent Property Owners 1. Lot 10, C.B. Parks 2. Lot 12, M.E. Lank	Plan View John G. Doe P.O. Box 123 Tidewater, Va 22222	County of: Northumberland Sheet 1 of 1 Date: August 3, 1991

Attachment 3

Permit # _____

Commonwealth of Virginia
Marine Resources Commission
Authorization

A Permit has been issued to: _____
(Name)

_____
(Address)

_____

The Permit Authorizes : _____
_____
_____
_____.

Issuance Date _____, Expiration Date _____.

_____
(Commissioner or Designee)

_____
(Notary Public)

_____
(Commission Expires)

This Notice Must Be Conspicuously Displayed At Site Of Work

EXHIBIT B

Local, State, Federal
Joint Permit Application

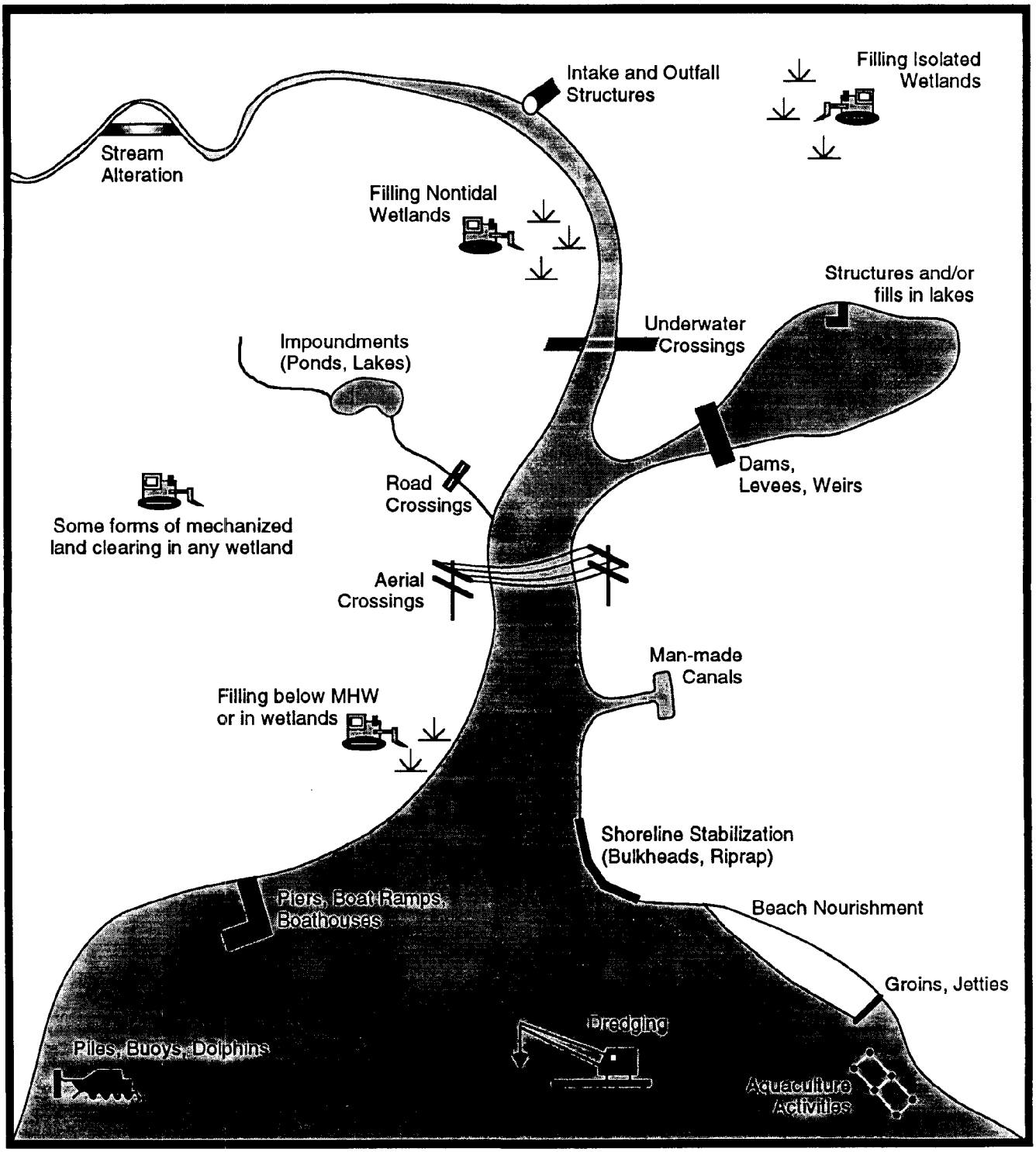

Published jointly by the:

U.S. Army Corps of Engineers, Norfolk District

Virginia Marine Resources Commission

Virginia Dept of Environmental Quality

Local Wetlands Boards

PREFACE

This guide is designed to assist you in applying for permits from Local, State, and Federal regulatory agencies for work in waters and/or wetlands within the Commonwealth of Virginia. The intent of the guide is to provide general information on the permit process, not a complete legal and technical reference.

Answers to technical questions and detailed information about specific aspects of the various permit programs may be obtained from any of the Federal and State regulatory offices or the advisory agencies listed in the agency directory.

THE JOINT PERMIT APPLICATION PROCESS

Complete one application to apply for multiple agency permits - A single Joint Permit Application is used by the regulatory agencies. This means only one application needs to be completed for most local, state, and federal agency permits. However, some health departments and local agencies do not use this application. You should contact them for information regarding their requirements. Even though one application has been filed, separate permits are often required from the regulatory agencies involved in the permit program. Before you begin work, make sure you have received authorizations or waivers from each agency.

Send completed application to the Virginia Marine Resources Commission. They will assign a processing number and forward copies to the Corps of Engineers, Department of Environmental Quality, local wetlands board, and various other State agencies, as appropriate.

If you have any questions about the need for a permit, the permitting process, or completing the joint permit application, contact the Corps of Engineers for a pre-application site visit. Corps staff can often help you minimize adverse impacts or eliminate the need for a Corps permit altogether.

ORGANIZATION OF THE JOINT APPLICATION

The basic application, appendices, and various acknowledgement forms are located in the front of the booklet. The general information section which contains a regulatory and resource agency directory, information on penalties, processing procedures, definitions and special terms, and the most frequently asked questions is located in the back of the booklet.

If you are submitting this application as a Pre-Discharge Notification (PDN) under the the Corps Nationwide permit program, 33 CFR 330 (Appendix A, Part C), you must clearly identify it by writing the letters PDN at the top of the first page of the basic application.

TABLE OF CONTENTS

Preface 1

Basic Application Form 3

Appendices with Sample Drawings

Appendix A	Private Piers & Marginal Wharves	9
Appendix B	Boathouses	11
Appendix C	Marinas & Community Piers	13
Appendix D	Dolphins-Mooring Piles-Buoys Not Associated w/Piers	15
Appendix E	Boat Ramps	17
Appendix F	Bulkheads & Associated Backfill	19
Appendix G	Fill	21
Appendix H	Riprap & Associated Backfill	23
Appendix I	Marsh Toe Stabilization	25
Appendix J	Dredging/Mining/Excavating	27
Appendix K	Groins & Jetties	29
Appendix L	Breakwaters	31
Appendix M	Beach Nourishment	33
Appendix N	Intake - Outfall Structures	35
Appendix O	Stream Channel Modifications	37
Appendix P	Impoundments/Dams	39
Appendix Q	Utility Crossings	41
Appendix R	Road Crossings (Bridges-Tunnels-Culverts)	43

Certification of Authorization (Designates Agent to Act on Your Behalf) 45

Adjacent Property Owners Acknowledgement Form 47

Applicant's and Contractor's Acknowledgement Form 49

Regulatory & Advisory Agencies 51

Information on Federal Wetlands Determinations 55

Federal Penalties, Related State Codes, Privacy Act Information 57

Processing Procedures 58

Most Frequently Asked Questions 59

Definitions, Special Terms, & Abbreviations 60

Certificate of Compliance with the U. S. Army Corps of Engineers Regional Permit RP-17 for the construction of open pile piers for private use. 63

Addendum: Department of Environmental Quality Additional Requirements. A1

BASIC APPLICATION FORM

JOINT PERMIT APPLICATION FOR ACTIVITIES IN
WATERS AND WETLANDS OF THE COMMONWEALTH OF VIRGINIA

PLEASE PRINT OR TYPE ALL ANSWERS:
If a question does not apply to your project please print N/A (not applicable) in the block or space provided. If additional space is needed, attach extra 8-1/2" x 11" sheets of paper. If you are unsure of a particular term, please refer to the definitions section.

1a. Applicant's name and complete address:
Mr., Mrs., Ms. (circle one)

Telephone numbers:
Home (A/C_____)_____
Work (A/C_____)_____

1b. Property Owner's name and complete address:
(if different from above)

Telephone numbers:
Home (A/C_____)_____
Work (A/C_____)_____

2. Authorized agent's name
and complete address (if applicable):

Telephone numbers:
Home (A/C_____)_____
Work (A/C_____)_____

3. Have you obtained a contractor for the project? __Yes __No If your answer is "yes" complete the remainder of this question and submit the Applicant's and Contractor's Acknowledgement Form on page 47 with your application.

Contractor's name and complete address:

Telephone numbers:
Home (A/C_____)_____
Work (A/C_____)_____

4. List the name, address, and telephone number of the newspaper having general circulation in the area of the project. Failure to complete this question may delay Local and State processing.

Name and complete address:

Telephone number:
(A/C____)_____

5. Please give the name of the waterbody at the project site, the county or city the project is located in, and directions to the site:

_____ a tributary to _____

located in _____
County/City

Give descriptive directions to the project site from the nearest intersection of two state roads within that county or city and visible points of reference :

IF THE PROJECT SITE IS LOCATED IN AN UNDEVELOPED SUBDIVISION OR PROPERTY, CLEARLY STAKE AND IDENTIFY PROPERTY LINES AND LOCATION OF PROPOSAL. A SUPPLEMENTAL MAP THAT SHOWS HOW THE PROPERTY IS TO BE DIVIDED SHOULD ALSO BE PROVIDED

6. State the project purpose and provide a brief description of the project:

7. Please place a checkmark next to as many of the following that describe your project site:

___ Tidal waters
___ Tidal wetlands
___ Nontidal waters
___ Nontidal wetlands
___ Vegetated Shallows
___ 100 year floodplain
___ Lake or Pond
___ Mudflats
___ River
___ Natural
___ Man-made
___ Unknown
___ Other (explain - e.g. Intermittent stream, vernal pool, etc.) _____

8. Proposed use (check one):

_____ Private
_____ Community
_____ Commercial
_____ Industrial
_____ Government
_____ Other (explain):

9. Will the project impact (flood, drain, excavate, dredge, fill, shade, etc.) wetlands ?
_____ Yes _____ No _____ Uncertain

If your answer is "YES", please indicate:

A. vegetated wetlands area(s) to be impacted?
tidal _____square feet nontidal _____ square feet
B. nonvegetated tidal wetlands area(s) to be impacted? _____ square feet

10. Will the project be located at the site of any historic property? (Note: historic properties include but are not limited to archeological sites, Civil War earthworks, graveyards, buildings, bridges, canals, etc.)
_____ Yes _____ No If "Yes", please provide a map showing the location.

11. Have you previously contacted the Department of Historic Resources concerning this project?
____ Yes _____ No If "Yes", please provide the following information:

a. VDHR file number: _____

b. Response date: _____

c. Type of response (no effect/no adverse effect, additional information requested, survey requested, further consultation needed): _____

12. Is your project located within a historic district? _____ Yes _____ No _____ Uncertain
If "Yes", please indicate which district: _____

13. Has a survey to locate archeological sites and/or historic structures been carried out on the property?
_____ Yes _____ No If "Yes", please provide the following information:

a. Date of survey: _____

b. Name of firm: _____

c. Is there a report on file with the Virginia Department of Historic Resources? _____

d. Was any historic property located? _____

14. Have you previously had a site visit, applied to, or obtained a permit from any agency (Federal, State, or Local) for any portion of the project described in this application or any other project at the site?
___ Yes ___ No If your answer is "Yes", provide the following information:

Name of Representative: _____

Agency	Activity	Application Number	Action Taken (check the appropriate box)
			___ Issued ___ Denied
			___ Withdrawn ___ Site Visit

Date Action taken _____

15. a) Has any work commenced or has any portion of the project for which you are seeking a permit been completed? _____ Yes _____ No

b) Are you submitting this application at the direction of any state, local or federal agency? __ Yes __ No
If your answer to either question above is "YES", give details below stating when the work was completed, who performed the work, and which agency (if any) directed you to submit the application. (Please clearly differentiate on your application drawings that portion of the work which has been completed from that which is proposed.)

16. Approximately how long will it take to complete the project after all required permits have been issued? _____ months

17. Approximate cost of the entire project (materials, labor, etc): $_____ Approximate cost of only that portion of the project which affects State Waters (below mean low water in tidal areas or ordinary high water in nontidal areas): $_____

18. List the name and complete mailing address of each adjacent property owner to the project.

19. List the name and complete mailing address of each waterfront property owner across the waterway from the project, if the water body is less than 500 feet wide. Also, if the project is within a cove, list the name and address of each property owner located on the cove.

20. All affected property owners must be notified of the proposed plans. If you do this yourself, it will assist us in processing your application. Have you discussed this project with all affected parties and had them sign an Adjacent Property Owner's Acknowledgement Form? _____ Yes _____ No If your answer is yes, the acknowledgement forms must be included with this application.

21. Check the appendices below which apply to your project. NOTE: The applicable appendices must be completed and submitted as part of your application. Additional appendices can be provided upon request. If you are proposing multiple activities, you may submit one plan view drawing provided all the required information for each activity is included (e.g. if your proposal includes a pier, boathouse and dredging, you may show all activities on a single plan view drawing). A sample drawing for each activity is located on the back of the corresponding appendix. Although the sample drawings are condensed so that the plan view, cross section, end view, and vicinity maps are all on one page, you do not have to limit your drawings to one page. Drawings submitted need not be prepared by a professional draftsman as in these samples.

LIST OF APPENDICES

_____	Appendix A	Private Piers & Marginal Wharves
_____	Appendix B	Boathouses
_____	Appendix C	Marinas & Commercial Piers
_____	Appendix D	Dolphins-Mooring Piles-Buoys Not Associated w/Piers
_____	Appendix E	Boat Ramps
_____	Appendix F	Bulkheads & Associated Backfill
_____	Appendix G	Fill
_____	Appendix H	Riprap & Associated Backfill
_____	Appendix I	Marsh Toe Stabilization
_____	Appendix J	Dredging/Mining/Excavating
_____	Appendix K	Groins & Jetties
_____	Appendix L	Breakwaters
_____	Appendix M	Beach Nourishment
_____	Appendix N	Intake - Outfall Structures
_____	Appendix O	Stream Channel Modifications
_____	Appendix P	Impoundments/Dams
_____	Appendix Q	Utility Crossings
_____	Appendix R	Road Crossings (Bridges-Tunnels-Culverts)
_____	Addendum	Department of Environmental Quality Additional Requirements

ALL APPLICANTS MUST SIGN

I hereby apply for all necessary permits for the activities I have described herein. I agree to allow the duly authorized representatives of any regulatory or advisory agency to enter upon the premises of the project site at reasonable times to inspect and photograph site conditions.

I hereby certify that the information submitted in this application is true and accurate to the best of my knowledge.

_____ APPLICANT'S SIGNATURE

_____ APPLICANT'S NAME (PRINTED/TYPED)

_____ DATE

REMINDER: BE SURE TO COMPLETE THE APPENDICES YOU CHECKED ABOVE AND SUBMIT WITH THE BASIC APPLICATION FORM (PAGES 3-7). MAIL ALL INFORMATION TO:

Virginia Marine Resources Commission
Habitat Management Division
P. O. Box 756
Newport News, Virginia 23607

APPENDIX A -- PRIVATE PIERS AND MARGINAL WHARVES

PLEASE COMPLETE THE CHECKLIST AND ANSWER THE QUESTIONS. THE DRAWINGS MUST CONTAIN THE FOLLOWING INFORMATION OR THEY WILL BE RETURNED AS INCOMPLETE:

Plan View Drawing

_____ north arrow
_____ waterway name
_____ existing structures
_____ benchmarks showing distances to fixed points of reference
_____ mean low water and mean high water lines (tidal)
_____ ordinary high water line (nontidal)
_____ location of vegetated wetlands at the project site
_____ shoreline, property lines, and location of adjacent property owners (if in a cove or the waterway is less than 500 feet wide, also show the location of the property owner across from the site)
_____ distance the proposed structure will be located from the adjoining property lines
_____ width of the waterway (measuring from mean high water to mean high water (tidal) or ordinary high water to ordinary high water (nontidal)
_____ ebb and flood (tidal) or direction of flow (nontidal)
_____ location and distance from existing channels (marked and/or unmarked)
_____ soundings taken at mean low water (tidal) or at full pool level (nontidal) at 10-foot intervals
_____ channelward encroachment (including mooring piles) relative to mean high and mean low water lines
_____ dimensions of pier and all L/T-head section, platform, or deck
_____ distance between the structure and mooring piles

Side View Drawing

_____ existing contours of the bottom and marsh peat surface
_____ mean high and mean low water levels (tidal areas)
_____ ordinary high water level (nontidal areas)
_____ height of pier over existing bottom or marsh peat surface

_____ **Vicinity Map** The name of the map from which the vicinity map was taken and the exact location of the project site must be included (U.S.G.S. quad sheet, street map, or county map is preferred).

1. Number of vessels to be moored at the pier: _____

2. Provide the registration number of vessel(s):

registration _____ type of vessel _____
registration _____ type of vessel _____
registration _____ type of vessel _____

3. Give type (e.g. sail, power, skiff, etc.) and size of vessel(s) to be moored at the pier:

_____type _____length _____width _____draft
_____type _____length _____width _____draft
_____type _____length _____width _____draft

APPENDIX A, Private Piers & Marginal Wharves

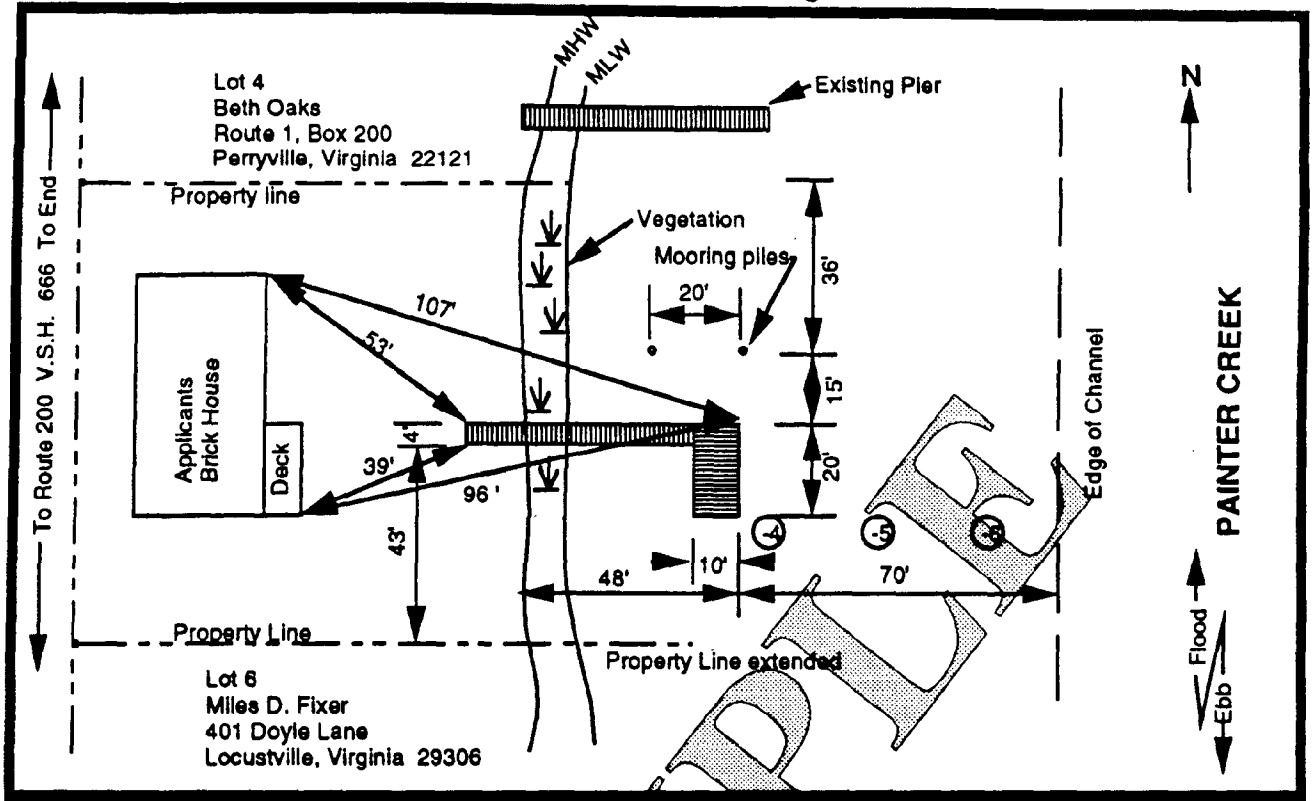

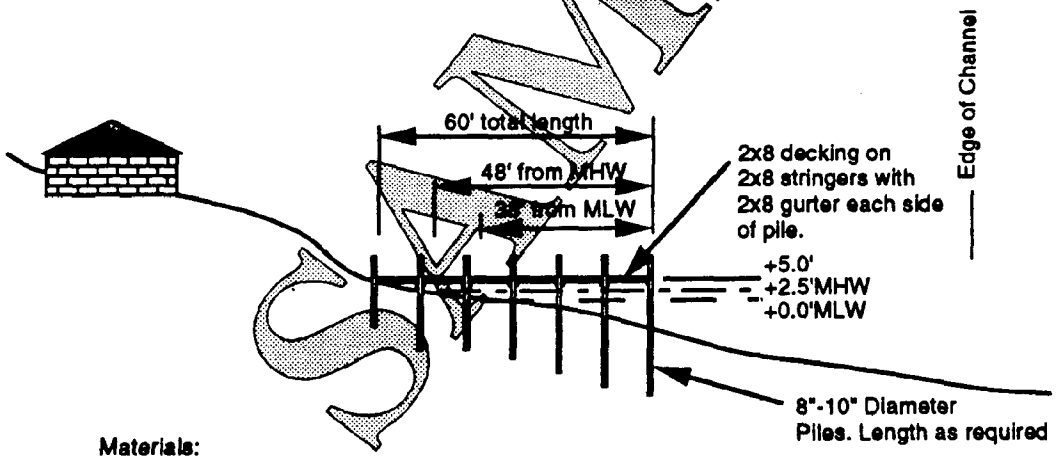

SAMPLE

Materials:
1. All piles and lumber to be salt treated.
2. All nails, bolts and Hardware to be galvanized.

Adjacent Property Owners:	Plan & Cross Sectional View	Proposed private pier project
1. Beth Oaks	Evans Pier Project	in Painter Creek at Martin Bay
2. Miles D. Fixer	Scale 1" = 40'	County of West
		Applicant J. J. Evans
		Sheet 1 of 1 Date 1/29/92

APPENDIX B --BOATHOUSES

PLEASE COMPLETE THE CHECKLIST AND ANSWER THE QUESTIONS. THE DRAWINGS MUST CONTAIN THE FOLLOWING INFORMATION OR THEY WILL BE RETURNED AS INCOMPLETE:

Plan View Drawing

_____ north arrow
_____ waterway name
_____ existing structures
_____ benchmarks showing distances to fixed points of reference
_____ mean low water and mean high water lines (tidal)
_____ ordinary high water line (nontidal)
_____ location of vegetated wetlands at the project site
_____ shoreline, property lines, and location of adjacent property owners (if in a cove or the waterway is less than 500 feet wide, also show the location of the property owner across from the site)
_____ width of the waterway (measuring from mean high water to mean high water (tidal) or ordinary high water to ordinary high water (nontidal)
_____ ebb and flood (tidal) or direction of flow (nontidal)
_____ location and distance from existing channels
_____ channelward encroachment (including mooring piles) relative to mean high and mean low water lines
_____ dimensions of the boathouse, catwalks, or other structures
_____ distance between the structure and mooring piles
_____ soundings taken at mean low water (tidal) or at ordinary high water (nontidal) at 10-foot intervals

End View Drawing

_____ mean high and mean low water levels (tidal)
_____ ordinary high water level (nontidal)
_____ dimensions of the proposed boathouse
_____ height above mean high and mean low water level
_____ material to be used for construction

_____ **Vicinity Map** The name of the map from which the vicinity map was taken and the exact location of the project site must be included (U.S.G.S. quad sheet, street map, or county map is preferred).

1. Give type (e.g. sail, power, skiff, etc.) and size of vessel(s) to be moored at the boathouse:

_____type _____length _____width _____draft
_____type _____length _____width _____draft
_____type _____length _____width _____draft

2. Will the sides of the boathouse be enclosed? _____ Yes _____ No

3. Provide the registration number of vessel(s):

registration _____ type of vessel _____
registration _____ type of vessel _____
registration _____ type of vessel _____

APPENDIX B, Boathouses

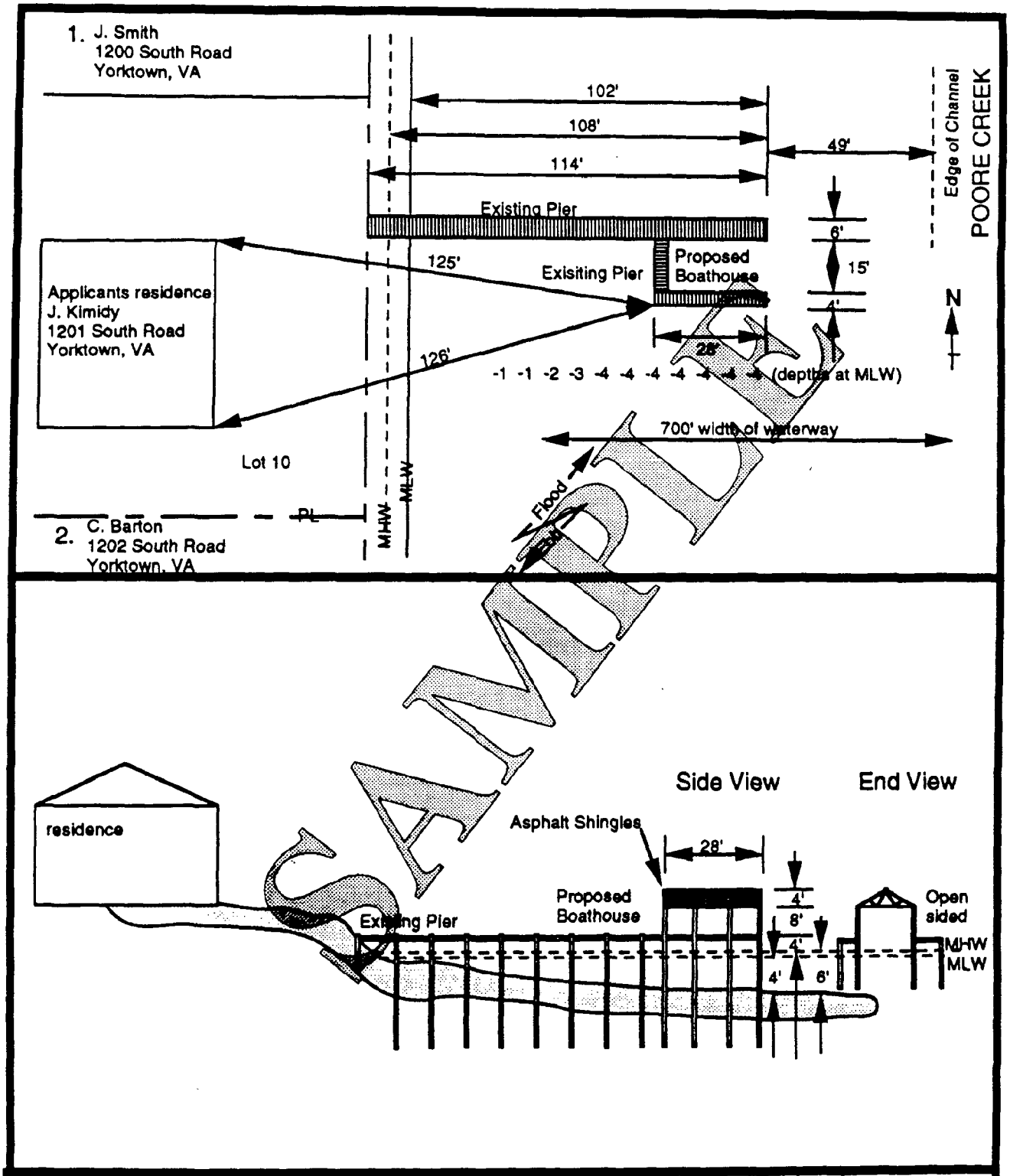

Adjacent Property Owners:	Plan & Cross Sectional View	Proposed Boathouse
1. J. G. Smith	J.Kimidy Boathouse	in Poore Creek at Iselivile
2. C. E. Barton	Scale 1" = 40'	County of West
		Applicant J. Kimidy
		Sheet 1 of 1 Date 1/29/92

APPENDIX C --MARINAS AND COMMUNITY PIERS

PLEASE COMPLETE THE CHECKLIST AND ANSWER THE QUESTIONS. THE DRAWINGS MUST CONTAIN THE FOLLOWING INFORMATION OR THEY WILL BE RETURNED AS INCOMPLETE:

Plan View Drawing

_____ north arrow
_____ waterway name
_____ existing structures
_____ benchmarks showing distances to fixed points of reference
_____ mean low water and mean high water lines (tidal)
_____ ordinary high water line (nontidal)
_____ location of vegetated wetlands at the project site
_____ shoreline, property lines, and location of adjacent property owners (if in a cove or the waterway is less than 500 feet wide, also show the location of the property owner across from the site)
_____ width of the waterway (measuring from mean high water to mean high water (tidal) or ordinary high water to ordinary high water (nontidal)
_____ ebb and flood (tidal) or direction of flow (nontidal)
_____ location and distance from existing channels
_____ channelward encroachment (including mooring piles) relative to mean high and mean low water lines
_____ length, width and other pertinent dimensions of the structures
_____ distance between the structures and mooring piles
_____ soundings taken at mean low water (tidal) or at ordinary high water (nontidal) at 10-foot intervals
_____ proposed structures for collection and handling of hazardous material (include settling tanks for collection of travel lift washdown water, paint chips, etc.)
_____ location of gasoline storage tanks

Cross Section Drawing

_____ dimensions of covered structures including roof height above mean high and mean low water level
_____ material to be used for construction
_____ existing contours of the bottom
_____ mean high and mean low water levels (tidal)
_____ ordinary high water level (nontidal)
_____ height above mean high/mean low/ordinary high water line
_____ height of structure(s) over the bottom or marsh peat surface

_____ **Vicinity Map** The name of the map from which the vicinity map was taken and the exact location of the project site must be included (U.S.G.S. quad sheet, street map, or county map is preferred).

1. Have you obtained the State Health Department's approval for sanitary facilities? _____ Yes _____ No
(You are required to obtain this approval or a variance before a VMRC permit can be issued.)

2. Will petroleum products or other hazardous materials be stored or handled at the facility?
_____ Yes _____ No If your answer is yes, please include your spill contingency plan

3. Will the facility be equipped to offload sewage from boats? _____ Yes _____ No

4. Indicate the number and type of slips:

	Wet Slips	Dry Storage
Existing		
Proposed		

THE DEPARTMENT OF ENVIRONMENTAL QUALITY REQUIRES APPLICANTS TO SUBMIT THE ADDENDUM LOCATED AT THE END OF THIS APPLICATION

APPENDIX C, Marinas

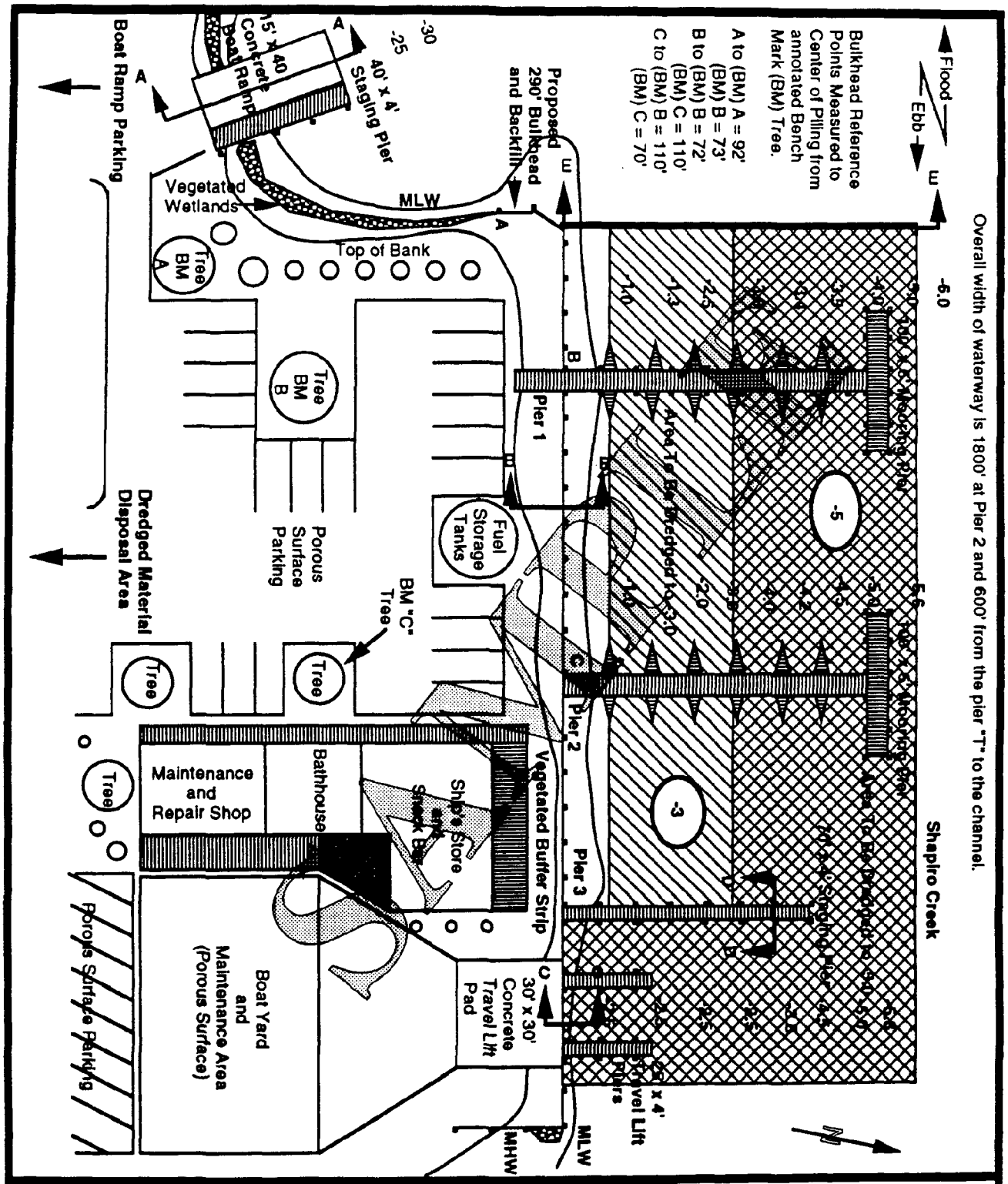

Adjacent Property Owners:

1. J. G. Smith
2. C. E. Barton

Plan View

Shapiro Creek Marina

Scale 1" = 40'

Proposed Marina & Support Facilities

in Shapiro Creek at Jones Point

County of West

Applicant Mark J. Harrell

Sheet 1 of 4 Date 3-12-93

APPENDIX D -- DOLPHINS OR MOORINGS
(not associated with piers)

PLEASE COMPLETE THE CHECKLIST AND ANSWER THE QUESTIONS. THE DRAWINGS MUST CONTAIN THE FOLLOWING INFORMATION OR THEY WILL BE RETURNED AS INCOMPLETE:

Plan View Drawing

_____ north arrow
_____ waterway name
_____ existing structures
_____ benchmarks showing distances to fixed points of reference
_____ mean low water and mean high water lines (tidal)
_____ ordinary high water line (nontidal)
_____ location of vegetated wetlands at the project site
_____ shoreline, property lines, and location of adjacent property owners (if in a cove or the waterway is less than 500 feet wide, also show the location of the property owner across from the site)
_____ width of the waterway (measuring from mean high water to mean high water (tidal) or ordinary high water to ordinary high water (nontidal)
_____ ebb and flood (tidal) or direction of flow (nontidal)
_____ type of mooring (buoy, pile, dolphin)
_____ anchoring device and weight
_____ latitude and longitude of mooring
_____ location and distance from existing channels
_____ total swing radius

Cross Section Drawing

_____ type of mooring
_____ length of chain and line used
_____ weight and type of anchor
_____ material to be used for construction
_____ existing contours of the bottom
_____ mean high and mean low water levels (tidal)
_____ ordinary high water level (nontidal)

_____ **Vicinity Map** The name of the map from which the vicinity map was taken and the exact location of the project site must be included (U.S.G.S. quad sheet, street map, or county map is preferred).

1. Give the number of vessels to be moored: _____

2. Give type (e.g. sail, power, skiff, etc.) and size of vessel(s) to be moored:

   _____type _____length _____width _____draft

   _____type _____length _____width _____draft

3. Name(s) and complete address(es) of the owner(s) of the vessel(s) if other than applicant:

   _____

   _____

4. Registration/documentation number(s) of the vessel(s): _____

5. Do you plan to reach the mooring from your own upland property? ____ Yes ____ No If "No", explain the proposed means of access: _____

   _____

APPENDIX D, Dolphins or Moorings

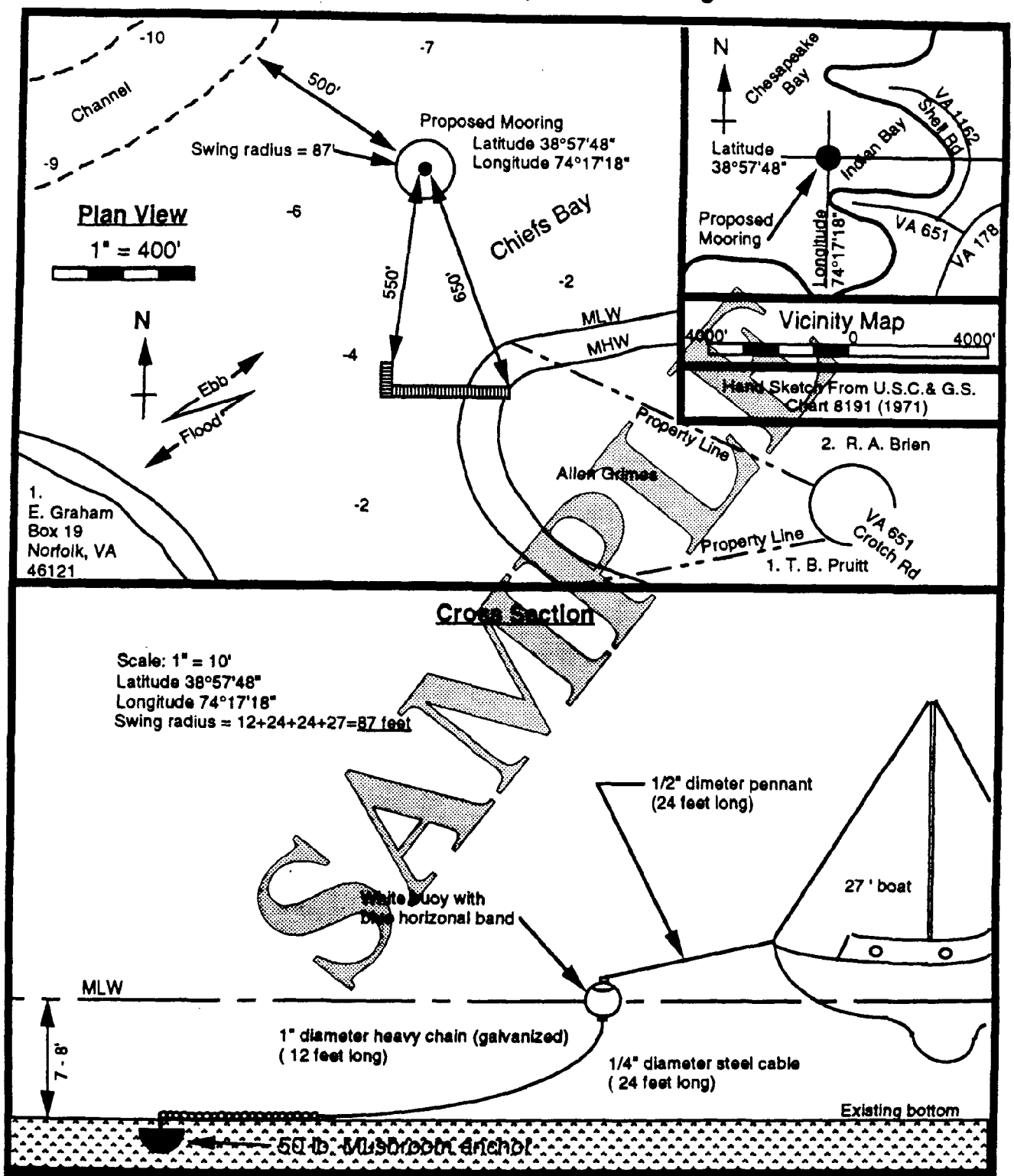

Adjacent Property Owners	Proposed Mooring	Proposed Mooring in
1. E. Graham 2. R. A. Brien 3. T. B. Pruitt	Allen Grimes 1121 Bark Road Richmond, Virginia Sheet 1 of 1 Date 3-20-93	Chiefs Bay at Cotnoir, VA County of West Applicant: Allen Grimes

APPENDIX E -- BOAT RAMPS

PLEASE COMPLETE THE CHECKLIST AND ANSWER THE QUESTIONS. THE DRAWINGS MUST CONTAIN THE FOLLOWING INFORMATION OR THEY WILL BE RETURNED AS INCOMPLETE:

Plan View Drawing

_____ north arrow
_____ waterway name
_____ existing structures
_____ benchmarks showing distances to fixed points of reference
_____ mean low water and mean high water lines (tidal)
_____ ordinary high water line (nontidal)
_____ location of vegetated wetlands at the project site
_____ shoreline, property lines, and location of adjacent property owners
_____ width of the waterway (measuring from mean high water to mean high water (tidal) or ordinary high water to ordinary high water (nontidal)
_____ ebb and flood (tidal) or direction of flow (nontidal)
_____ dimensions of ramp
_____ location and distance from existing channels
_____ channelward encroachment relative to mean high and mean low water lines

Cross Section Drawing

_____ material to be used for construction
_____ existing contours of the bank and surface
_____ mean high and mean low water levels (tidal)
_____ ordinary high water level (nontidal)

_____ **Vicinity Map** The name of the map from which the vicinity map was taken and the exact location of the project site must be included (U.S.G.S. quad sheet, street map, or county map is preferred).

1. Will any excavation be required to construct the boat ramp? _____ Yes _____ No If yes, explain how and where you plan on disposing of the excavated material: _____
_____
_____

2. What type of design and materials will be used (e.g. open pile design with salt treated lumber or concrete slab on gravel bedding, etc.)? _____
_____

3. Please give the location of the nearest public boatramp: _____
_____

4. Will any other structures be installed concurrent with the boatramp installation (e.g. tending pier, groin, etc.)? _____ Yes ____ No If "Yes", please include the appropriate appendices.

5. Will any portion of the project be placed on wetlands? _____ Yes _____ No
If your answer is yes, indicate the square footage and type of area(s) to be impacted:

	Tidal	Nontidal
Vegetated wetlands	sf	sf
Non-vegetated wetlands	sf	----------
Subaqueous land	sf	sf

FOR COMMERCIAL BOATRAMPS, THE DEPARTMENT OF ENVIRONMENTAL QUALITY REQUIRES APPLICANTS TO SUBMIT THE ADDENDUM LOCATED AT THE END OF THIS APPLICATION

APPENDIX E, Boat Ramps

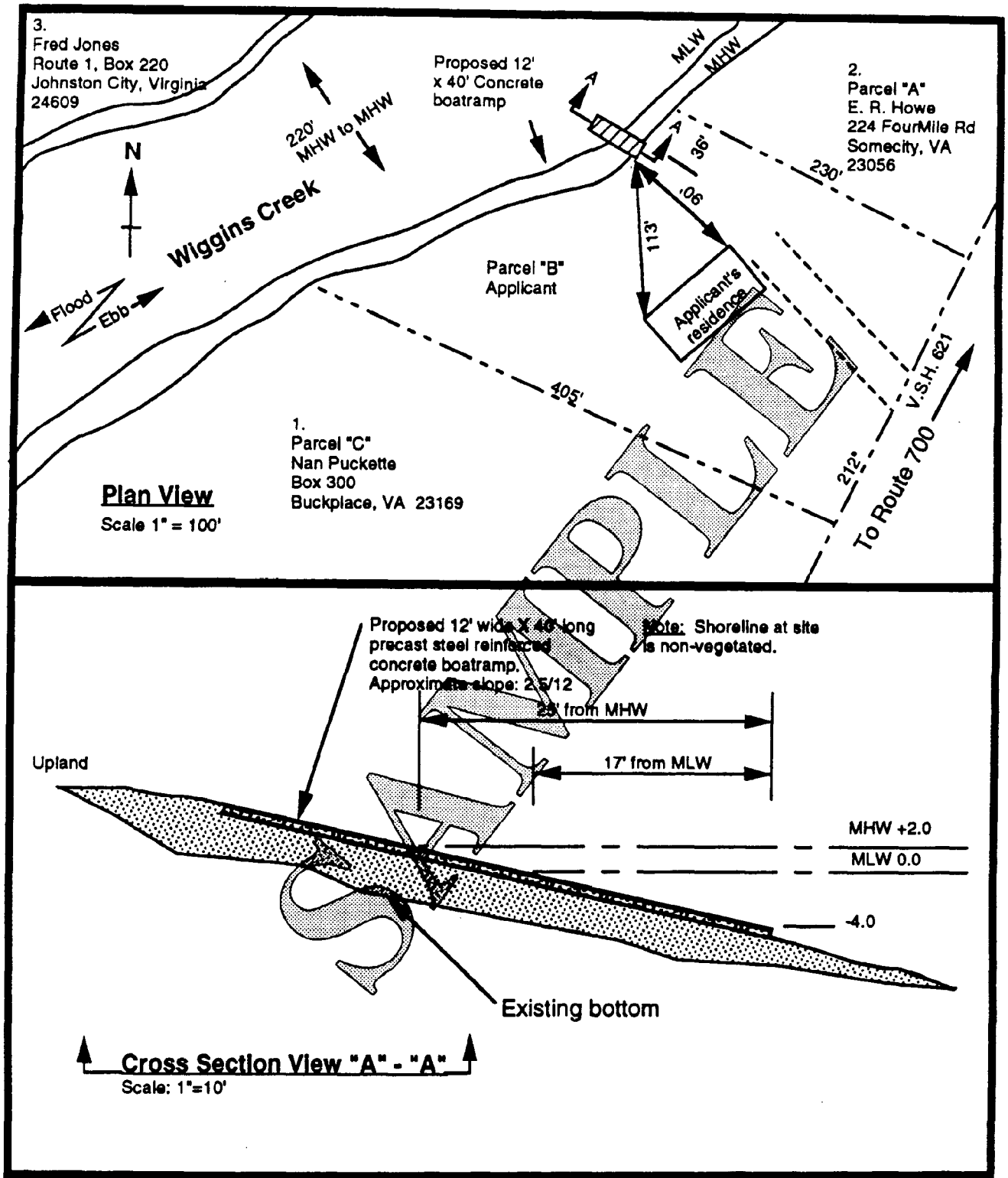

Adjacent Property Owners:	Plan & Cross Sectional View	Proposed boatramp project
1. Nan Puckette 2. Elizabeth R. Howe 3. Fred Jones	Hill Boatramp Project	In Wiggins Creek at Lewisville Bay County of West Applicant Carlton L. Hill Sheet 1 of 1 Date 3-19-93

APPENDIX F --BULKHEADS & ASSOCIATED BACKFILL

PLEASE COMPLETE THE CHECKLIST AND ANSWER THE QUESTIONS. THE DRAWINGS MUST CONTAIN THE FOLLOWING INFORMATION OR THEY WILL BE RETURNED AS INCOMPLETE:

Plan View Drawing

_____ north arrow
_____ waterway name
_____ existing structures
_____ benchmarks showing distances to fixed points of reference
_____ mean low water and mean high water lines (tidal)
_____ ordinary high water line (nontidal)
_____ channelward encroachment relative to mean high/mean low/ordinary high water lines
_____ location of vegetated wetlands at the project site
_____ shoreline, property lines, and location of adjacent property owners
_____ ebb and flood (tidal) or direction of flow (nontidal)
_____ return walls (if applicable)
_____ connection with existing bulkhead(s) (if applicable)
_____ proposed riprap scour protection (if applicable)
_____ proposed backfill
_____ length of bulkhead

Cross Section Drawing

_____ design & dimensions including all structural components (i.e. deadmen, knee braces, sheeting, etc.)
_____ material to be used for construction
_____ existing contours of the bottom and marsh peat surface
_____ mean high and mean low water levels (tidal)
_____ ordinary high water level (nontidal)
_____ proposed backfill
_____ base width and height of proposed riprap scour protection (if applicable)
_____ filter cloth

_____ **Vicinity Map** The name of the map from which the vicinity map was taken and the exact location of the project site must be included (U.S.G.S. quad sheet, street map, or county map is preferred).

1. a) Is any portion of the project maintenance or replacement of an existing and currently serviceable bulkhead and/or backfill? _____ Yes _____ No Linear feet existing: _____

   b) If yes, is it possible to construct the new bulkhead no greater than 2 feet channelward of the existing bulkhead? _____ Yes _____ No If your answer is "No", explain: _____

   _____

2. Describe type of construction and materials to be used, including source of backfill material and its composition (e.g. 80% sand, 15% clay and 5% silt), and all fittings for the bulkhead: _____

   _____

3. Will any portion of the project be placed on wetlands or subaqueous land? _____ Yes _____ No
   If your answer is yes, indicate the square footage and type of area(s) to be impacted:

	Tidal	Nontidal
Vegetated wetlands	sf	sf
Non-vegetated wetlands	sf	----------
Subaqueous land	sf	sf

APPENDIX F, Bulkheads & Associated Backfill

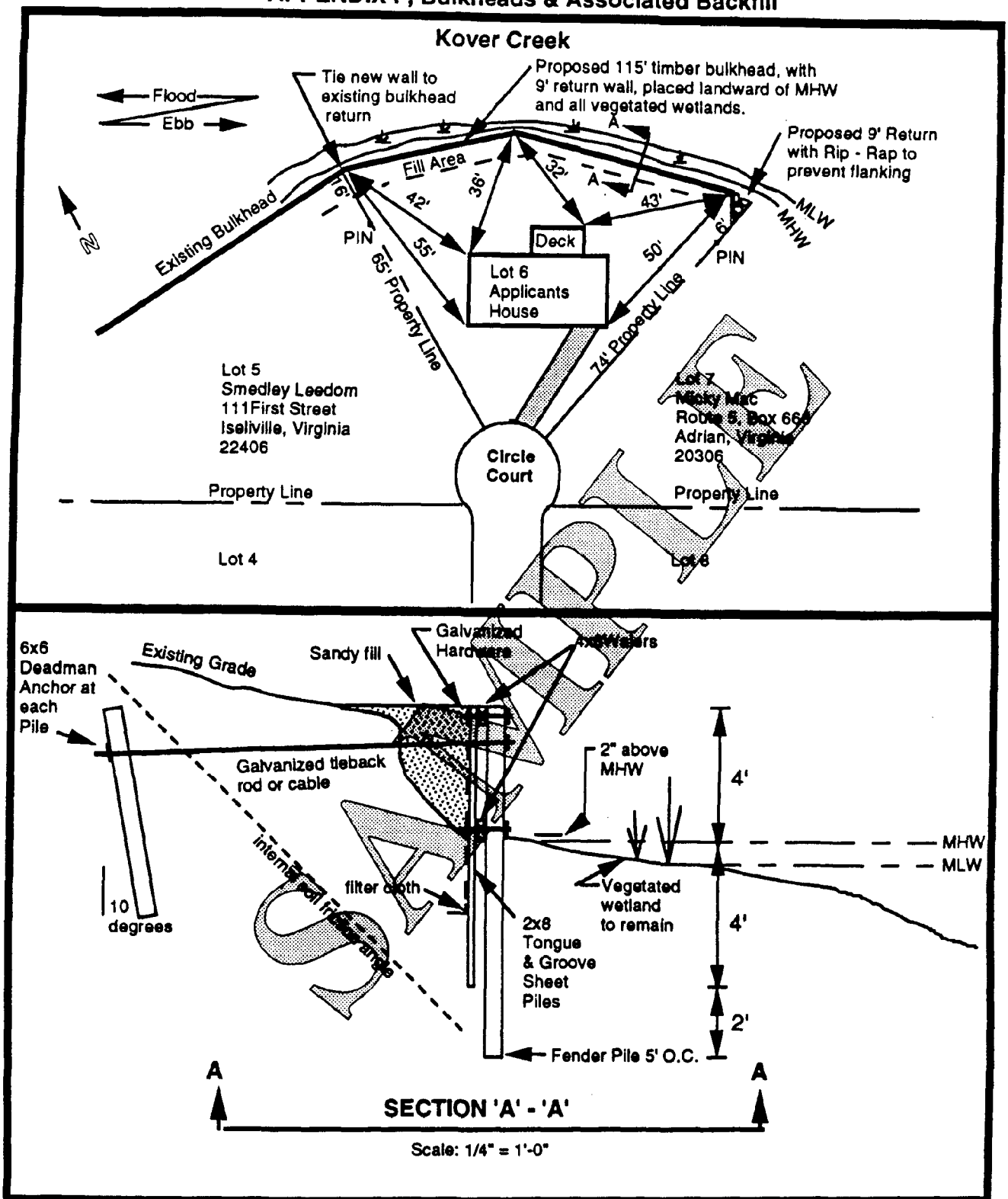

Adjacent Property Owners:	Plan & Cross Sectional View	Proposed bulkhead project
1. Smedley Leedom	Williams Bulkhead	In Kover Creek at Ibison Bay
2. Mickey Mac	Scale 1" = 40'	County of West
		Applicant Bruce Williams
		Sheet 1 of 1 Date 2/24/93

APPENDIX G -- FILL

PLEASE COMPLETE THE CHECKLIST AND ANSWER THE QUESTIONS. THE DRAWINGS MUST CONTAIN THE FOLLOWING INFORMATION OR THEY WILL BE RETURNED AS INCOMPLETE:

Plan View Drawing

_____ north arrow
_____ waterway name (if applicable)
_____ dimensions of area to be filled
_____ existing structures
_____ benchmarks showing distances to fixed points of reference
_____ location of vegetated wetlands at the project site
_____ property lines, and location of adjacent property owners
_____ mean low water and mean high water lines (tidal)
_____ ordinary high water line (nontidal)
_____ channelward encroachment relative to mean high/mean low water lines (tidal) or ordinary high water line (nontidal)
_____ width of the waterway (if applicable)
_____ ebb and flood (tidal) or direction of flow (nontidal)

Cross Section Drawing

_____ existing contours of the bottom
_____ elevation of proposed fill
_____ structure or method used to contain fill
_____ mean high and mean low water levels (tidal)
_____ ordinary high water level (nontidal)

_____ **Vicinity Map** The name of the map from which the vicinity map was taken and the exact location of the project site must be included (U.S.G.S. quad sheet, street map, or county map is preferred).

1. What is the source and amount of the fill material? _____ _____ cubic yards
2. State the type and composition percentage of the fill material (e.g. 80% sand, 15% clay, 5% silt):
   _____
3. Explain the purpose of the filling activity & the type of structure to be built on the filled area:
   _____
   _____
4. If filling activity is proposed in a wetlands, what is the distance from the nearest waterbody? _____
5. Will any of the fill be placed on wetlands or subaqueous land? _____ Yes _____ No
   If your answer is yes, indicate the square footage and type of area(s) to be impacted:

	Tidal	Nontidal
Vegetated wetlands	sf	sf
Non-vegetated wetlands	sf	----------
Subaqueous land	sf	sf

6. Describe the method(s) that will be used for sedimentation and erosion control: _____
   _____
7. What is the approximate drainage area and average stream flow? _____ square miles _____ cfs

THE DEPARTMENT OF ENVIRONMENTAL QUALITY REQUIRES APPLICANTS TO SUBMIT THE ADDENDUM LOCATED AT THE END OF THIS APPLICATION

APPENDIX G, Filling Waters / Wetlands

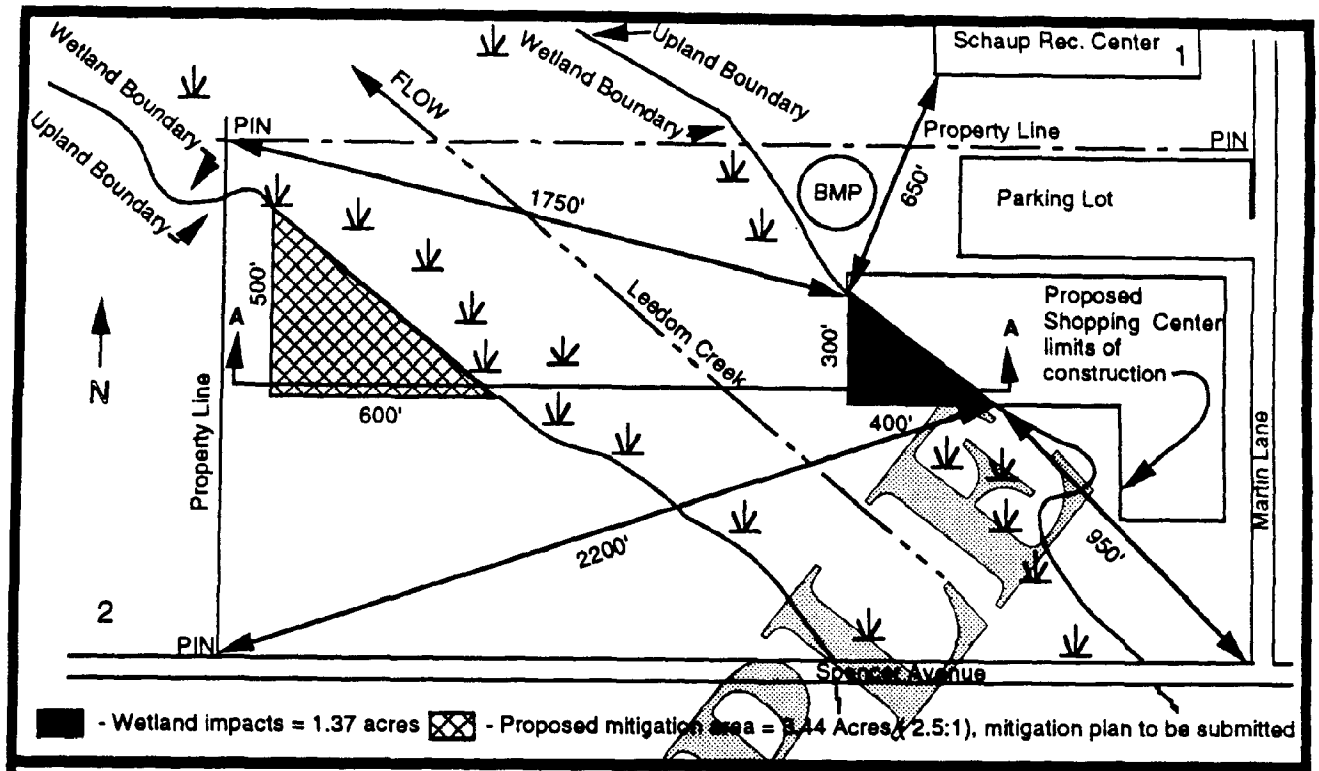

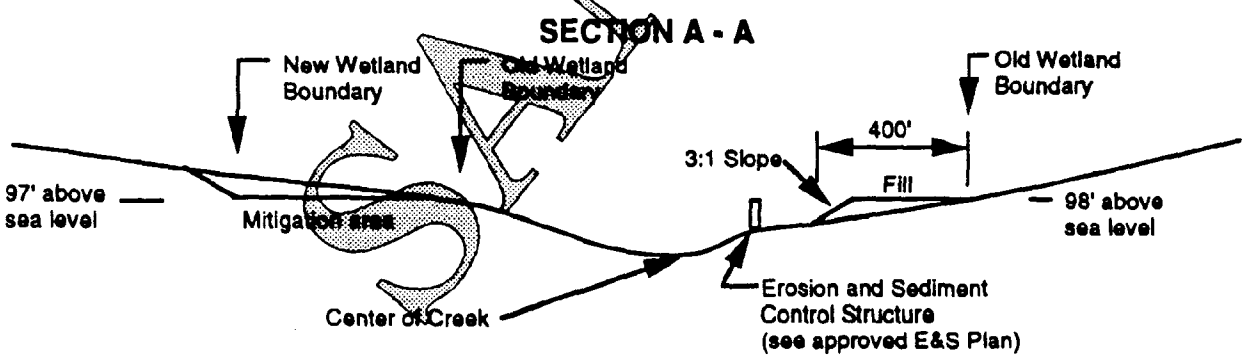

SAMPLE

Adjacent Property Owners:	Plan & Cross Sectional View	Proposed dredging project
1. M. Schaup	Knepper Filling Project	In Leedom Creek at Perkins Bay
2. C. Jones	Scale 1" = 500'	County of Woodward
		Applicant D.A. Knepper
		Sheet 1 of 1 Date 1/29/92

APPENDIX H -- RIPRAP REVETMENT & ASSOCIATED BACKFILL

PLEASE COMPLETE THE CHECKLIST AND ANSWER THE QUESTIONS. THE DRAWINGS MUST CONTAIN THE FOLLOWING INFORMATION OR THEY WILL BE RETURNED AS INCOMPLETE:

Plan View Drawing

_____ north arrow
_____ waterway name
_____ existing structures
_____ benchmarks showing distances to fixed points of reference
_____ mean low water and mean high water lines (tidal)
_____ ordinary high water line (nontidal)
_____ location of vegetated wetlands at the project site
_____ shoreline, property lines, and location of adjacent property owners
_____ ebb and flood (tidal) or direction of flow (nontidal)
_____ channelward encroachment relative to mean high/mean low/ordinary high water lines
_____ connection with existing bulkhead or riprap structures (if applicable)
_____ proposed backfill
_____ length of revetment

Cross Section Drawing

_____ proposed backfill
_____ mean high and mean low water levels (tidal)
_____ ordinary high water (nontidal)
_____ existing contours of the shoreline and/or bank
_____ dimensions of proposed revetment
_____ filter cloth
_____ buried toe or riprap apron
_____ proposed grading of existing bank relative to mean high/ordinary high water

_____ **Vicinity Map** The name of the map from which the vicinity map was taken and the exact location of the project site must be included (U.S.G.S. quad sheet, street map, or county map is preferred).

1. What will be the average amount of material (placed below the plane of mean high water or ordinary high water) per linear foot of shoreline? _____cu.yd(s).per ft. **OR** ___ton(s) per ft.

2. What type of material will be used for construction of the riprap revetment (e.g. quarry stone, cinder blocks, etc.)?
_____

3. What will be the average weight of the: Core material (bottom layers) ____ pounds per stone
Armor material (top 2 layers) _____ pounds per stone

4. If the revetment will be backfilled, describe the composition of the material to be used (e.g. 80% sand, 15% clay and 5% silt):
_____

5. What is the source of the backfill material? _____

6. Will any portion of the project be placed on wetlands or subaqueous land? _____ Yes _____ No
If your answer is yes, indicate the square footage and type of area(s) to be impacted:

	Tidal	Nontidal
Vegetated wetlands	sf	sf
Non-vegetated wetlands	sf	----------
Subaqueous land	sf	sf

THE DEPARTMENT OF ENVIRONMENTAL QUALITY REQUIRES APPLICANTS TO SUBMIT THE ADDENDUM LOCATED AT THE END OF THIS APPLICATION

APPENDIX H, Riprap Revetment & Associated Backfill

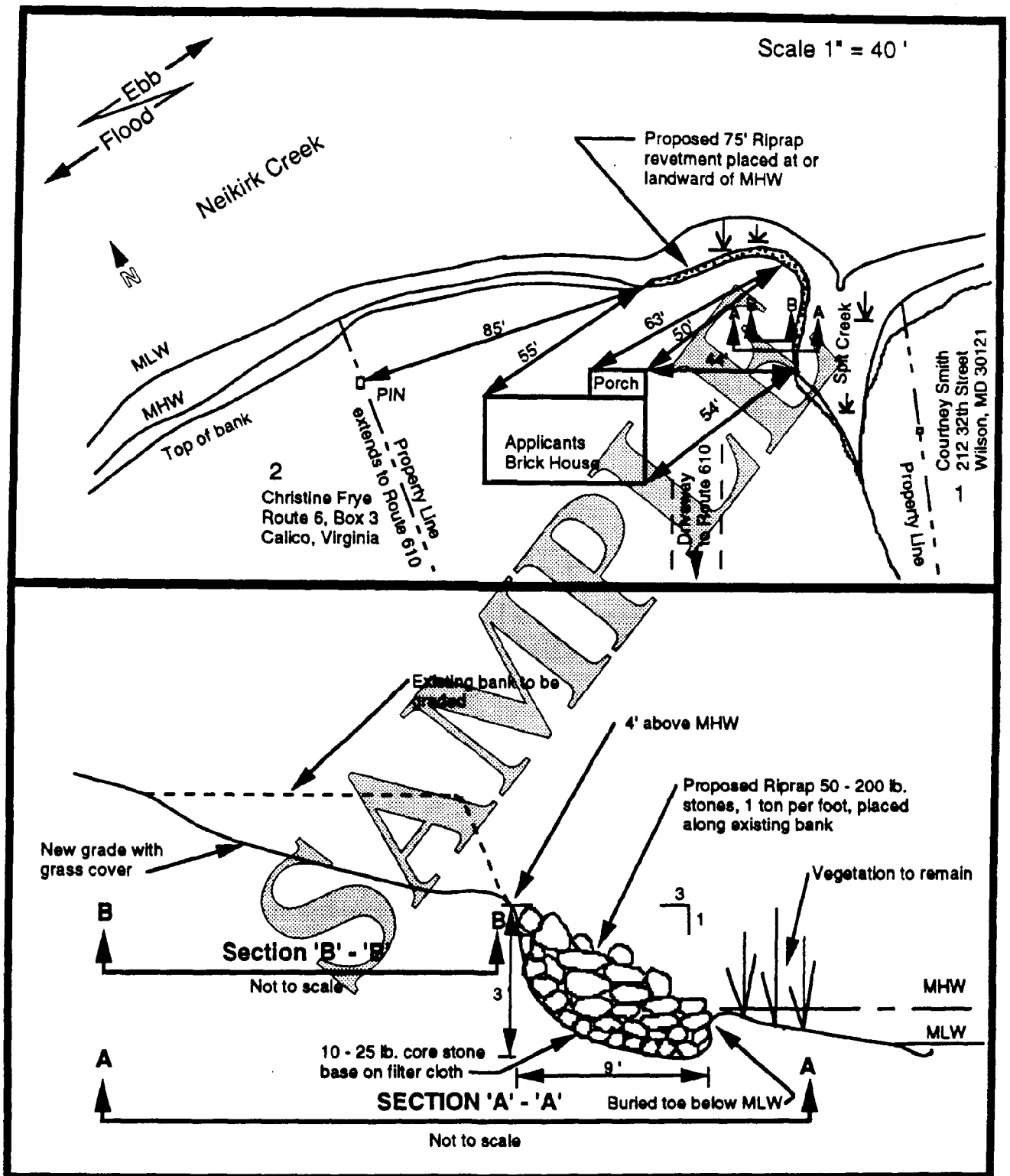

Adjacent Property Owners:	Plan & Cross Sectional View	Proposed Revetment Project
1. Courtney Smith	Berg Riprap Revetment	In Neikirk Creek at Roadley Bay
2. Christine Frye		County of Culpepper
		Applicant Bart Berg
		Sheet 1 of 1 Date 3-17-93

APPENDIX I -- MARSH TOE STABILIZATION

PLEASE COMPLETE THE CHECKLIST AND ANSWER THE QUESTIONS. THE DRAWINGS MUST CONTAIN THE FOLLOWING INFORMATION OR THEY WILL BE RETURNED AS INCOMPLETE:

Plan View Drawing

_____ north arrow
_____ waterway name
_____ mean low water and mean high water lines (tidal)
_____ ordinary high water line (nontidal)
_____ existing and proposed structures showing distance relative to mean high/mean low/ordinary high water
_____ benchmarks showing distances to fixed points of reference
_____ location of vegetated wetlands at the project site
_____ shoreline, property lines, and location of adjacent property owners
_____ ebb and flood (tidal) or direction of flow (nontidal)
_____ length of structure

Cross Section Drawing

_____ mean high and mean low water levels (tidal)
_____ ordinary high water level (nontidal)
_____ existing contours of the bottom and marsh peat surface
_____ dimensions of proposed structure
_____ deadmen, tie-backs, knee braces, or other methods to be used to anchor the structure
_____ filter cloth
_____ buried toe or riprap apron

_____ **Vicinity Map** The name of the map from which the vicinity map was taken and the exact location of the project site must be included (U.S.G.S. quad sheet, street map, or county map is preferred).

1. What type of material will be used (e.g. quarry stone, cinder blocks, treated tongue and groove timber, etc.)? _____

2. If riprap will be used for construction, provide the following information:
   a) average amount of cubic yards OR tons used per linear foot of structure? _____cu.yd(s). _____ton(s)
   b) will filter cloth be used? ___ Yes ___ No
   c) average weight of the: Core material (bottom layers) _____ pounds per stone
      Armor material (top 2 layers) _____ pounds per stone

3. Will any portion of the project be placed on wetlands or subaqueous land? _____Yes _____No
   If your answer is yes, indicate the amount and type of area(s) to be impacted:

	Square feet
Vegetated wetlands	
Non-vegetated wetlands	
Subaqueous land	

APPENDIX I, Marsh Toe Stabilization

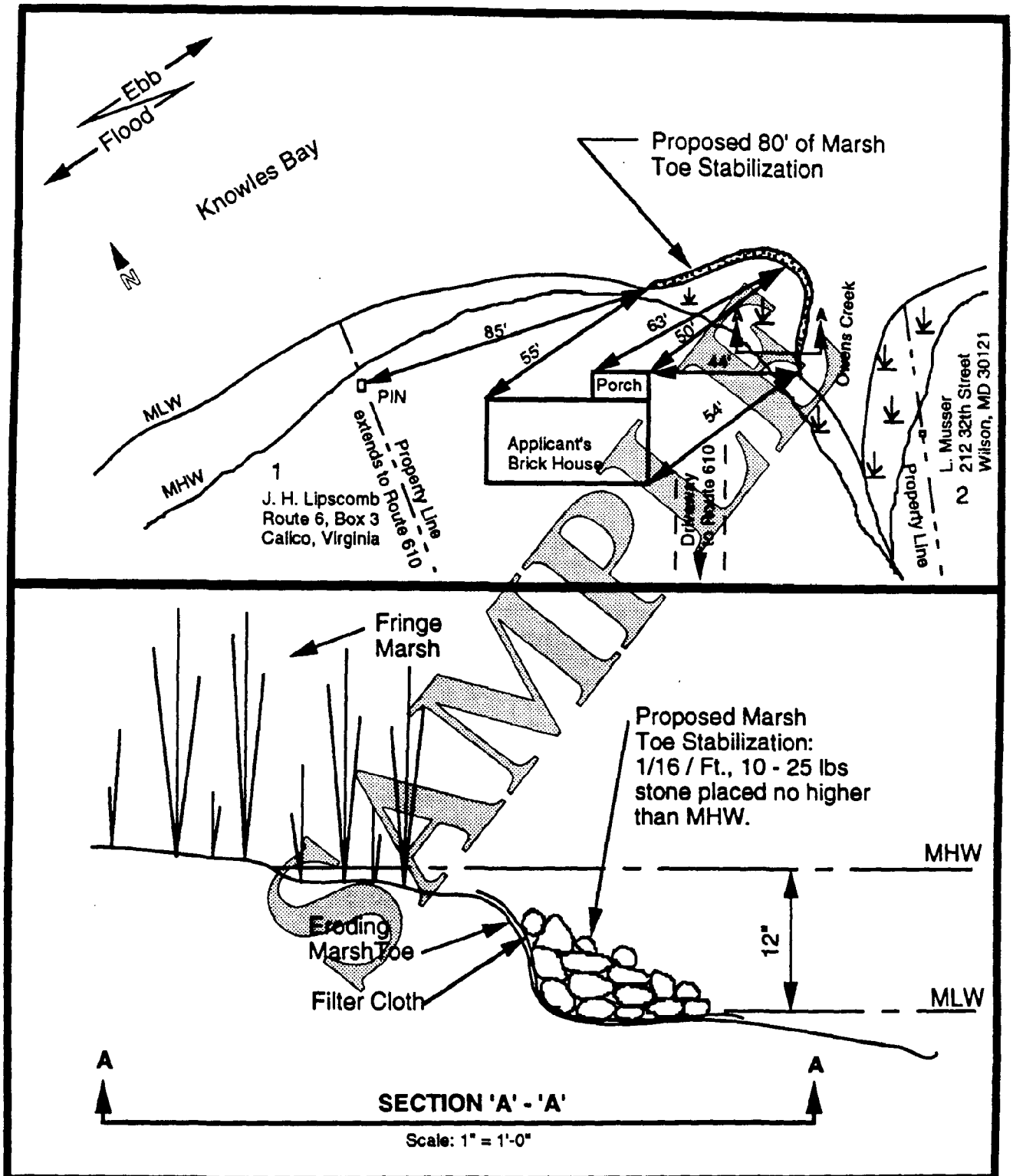

Adjacent Property Owners:	Plan & Cross Sectional View	Proposed Marsh Toe Stabilization
1. J. H. Lipscomb 2. L. Musser	Watkinson Marsh Toe Stabilization Scale 1" = 40'	in Owens Creek at Knowles Bay County of West Applicant A. Watkinson Sheet 1 of 1 Date 2/24/93

APPENDIX J -- DREDGING/MINING/EXCAVATING

PLEASE COMPLETE THE CHECKLIST AND ANSWER THE QUESTIONS. THE DRAWINGS MUST CONTAIN THE FOLLOWING INFORMATION OR THEY WILL BE RETURNED AS INCOMPLETE:

Plan View Drawing

_____ north arrow
_____ waterway name
_____ existing structures
_____ width of the waterway, measuring from mean high water to mean high water (tidal) or ordinary high water to ordinary high water (nontidal)
_____ ebb and flood (tidal) or direction of flow (nontidal)
_____ location and dimensions of area proposed to be dredged
_____ benchmarks showing distances to fixed points of reference
_____ mean low water and mean high water lines (tidal), or ordinary high water line (nontidal)
_____ location and aerial extent of vegetated wetlands at the project site
_____ shoreline, property lines, and location of adjacent property owners
_____ location of existing channels
_____ location of dredged material disposal area if located on-site**
_____ location and dimensions of buffer zone between dredge cut and vegetated wetlands
_____ existing depths in the project area based on mean low water (tidal) or ordinary high water (nontidal)

Cross Section Drawing for Dredge Area

___ existing contours of the bottom
___ dredge cut - slopes, average depth, bottom & top width
___ existing depths based on mean low water (tidal)
___ existing depths based on ordinary high water (nontidal)
___ proposed project depths (after dredging)

Cross Section Drawing for Disposal Area

___ proposed berms
___ proposed spillways
___ ponding depth of dredged material

_____ **Vicinity Map** The name of the map from which the vicinity map was taken and the exact location of the project site must be included (U.S.G.S. quad sheet, street map, or county map is preferred).

**For off-site disposal areas provide a drawing that includes the location, dimensions, benchmarks, berms and/or spillways, and how the material will be transported.

1. How many cubic yards of material will be dredged by/from:

	NEW				MAINTENANCE			
	Hydraulic	Dragline	Clamshell	Other	Hydraulic	Dragline	Clamshell	Other
Vegetated Wetlands								
Non-Veg. Wetlands								
Subaqueous Land								
Total								

2. State the composition of the material (e.g. clay 25%, sand 25%, silt 50%): _____

3. How will the dredged material be retained to prevent re-entry into the waterway? _____

4. Will the dredged material be used for any commercial purpose? ____ Yes ___ No

5. For mining projects: a. Explain the operation plans on a separate sheet of paper. e.g. frequency (e.g. every 6 wks), duration (Apr - Sep), cubic yards to be removed per operation, temporary storage, handling of dredged material, how equipment will access the dredge site.
   b. have you applied for a permit from the VA Dept of Mines, Minerals, & Energy? ___ Yes ___ No

6. What is the approximate drainage area and average stream flow? _____ square miles _____ cfs

7. If maintenance dredging, when was dredging last performed? _____ (provide documentation).

THE DEPARTMENT OF ENVIRONMENTAL QUALITY REQUIRES APPLICANTS TO SUBMIT THE ADDENDUM LOCATED AT THE END OF THIS APPLICATION

APPENDIX J, Dredging/ Mining/Excavating

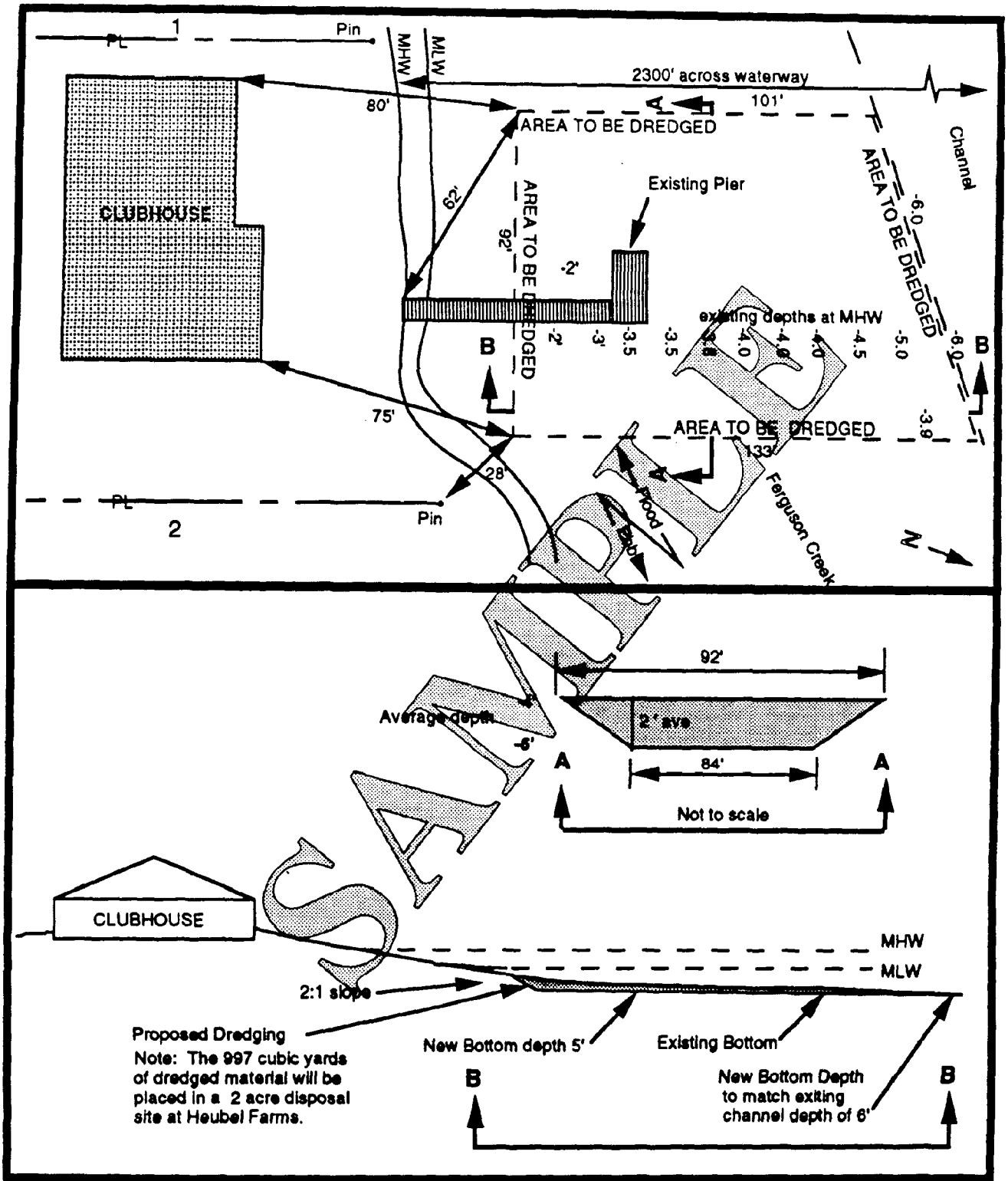

Adjacent Property Owners:	Plan & Cross Sectional View	Proposed dredging project
1. J. G. Cundiff	Grabb Dredging Project	in Ferguson Creek at Sneed Bay
2. C. E. Bigelow	Scale 1" = 40'	County of Byrd
		Applicant R. J. Grabb
		Sheet 1 of 1 Date 1/29/92

APPENDIX K -- GROINS & JETTIES

PLEASE COMPLETE THE CHECKLIST AND ANSWER THE QUESTIONS. THE DRAWINGS MUST CONTAIN THE FOLLOWING INFORMATION OR THEY WILL BE RETURNED AS INCOMPLETE:

Plan View Drawing

_____ north arrow
_____ waterway name
_____ existing structures
_____ location and dimensions of proposed structure
_____ spacing between structures (both existing and proposed)
_____ benchmarks showing distances to fixed points of reference
_____ mean low water and mean high water lines (tidal)
_____ ordinary high water line (nontidal)
_____ location of vegetated wetlands at the project site
_____ shoreline, property lines, and location of adjacent property owners
_____ ebb and flood (tidal) or direction of flow (nontidal)
_____ location of existing channels
_____ direction of net sand transport along the shoreline
_____ location of scour protection or spurs (if applicable)
_____ channelward encroachment relative to mean high/mean low/ordinary high water lines

Cross Section Drawing

_____ length and height of structure relative to mean low water (tidal) or ordinary high water (nontidal)
_____ mean high and mean low water levels (tidal)
_____ ordinary high water level (nontidal)
_____ existing contours of the bottom and/or marsh peat surface
_____ height of channelward end of groin relative to mean low water

End View Drawing (if riprap is used for construction)

_____ design and dimensions of structure (i.e. base & top widths, height, and slope)

_____ **Vicinity Map** The name of the map from which the vicinity map was taken and the exact location of the project site must be included (U.S.G.S. quad sheet, street map, or county map is preferred).

1. What type of material(s) are to be used for the construction? _____

2. a. If using riprap, what will be the average weight of the:

   Core material (bottom layers) _____ pounds per stone

   Armor material (top 2 layers) _____ pounds per stone

   b. Will filter cloth be used? _____ Yes _____ No

3. Are there similar structures in the vicinity of the project site? _____ Yes _____ No If your answer is "yes", describe the type and location of the structures: _____

   _____

4. Will the channelward end of the structure be marked to show a hazard to navigation? ___ Yes ___ No

5. Has the project been reviewed by the Shoreline Erosion Advisory Service (SEAS)? ___ Yes ___ No
   If yes, please attach a copy of their comments.

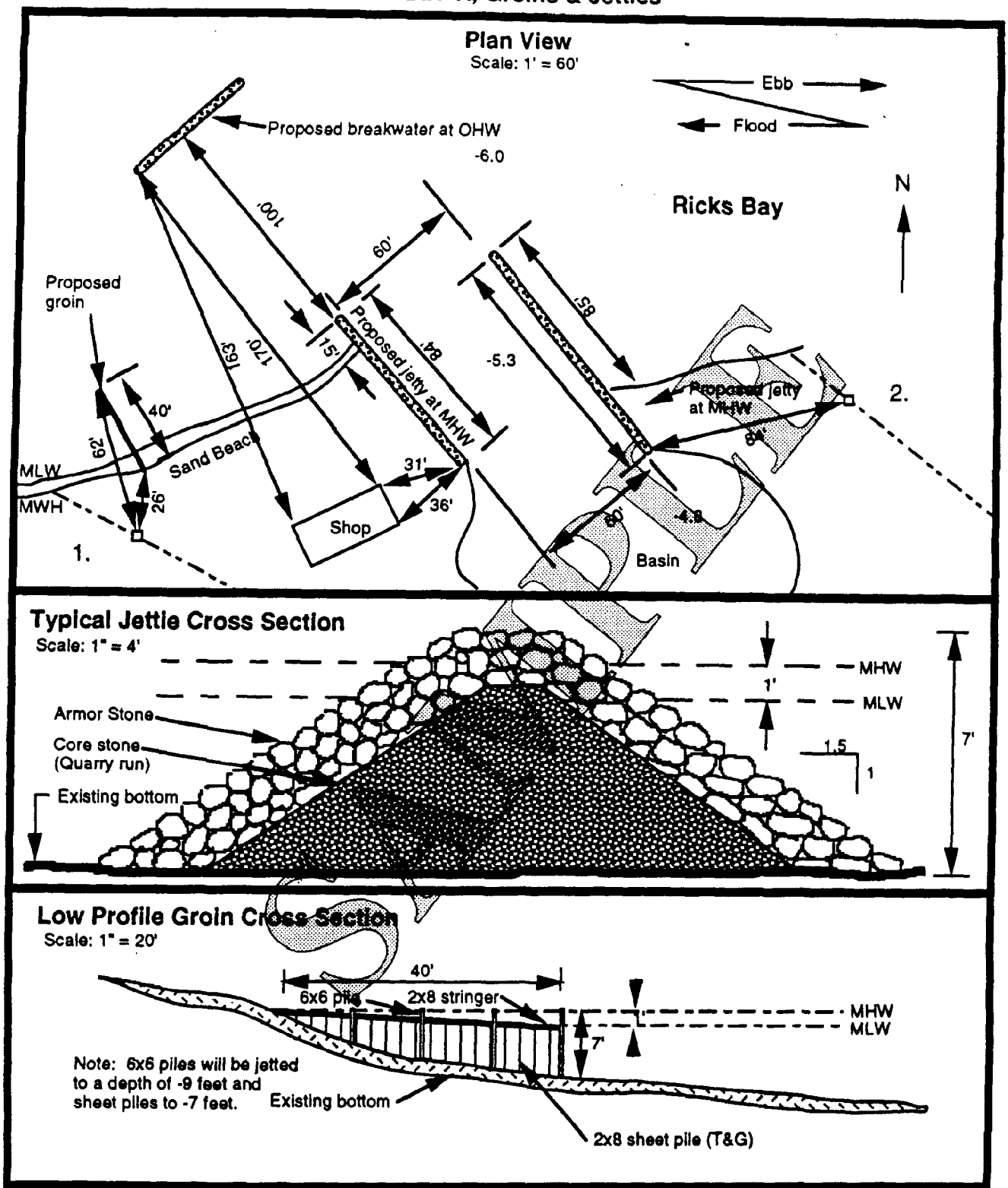

Adjacent Property Owners:

1. T. Barnard
2. C. Robinson

Plan &Typical Cross Sectional View

McCarthy Construction Site

Proposed jetties project
in Ricks Bay at Henderson Point

County of West
Applicant James McCarthy
Sheet 1 of 2 **Date** 3-27-93

APPENDIX L -- BREAKWATERS

PLEASE COMPLETE THE CHECKLIST AND ANSWER THE QUESTIONS. THE DRAWINGS MUST CONTAIN THE FOLLOWING INFORMATION OR THEY WILL BE RETURNED AS INCOMPLETE:

Plan View Drawing

_____ north arrow
_____ waterway name
_____ existing structures
_____ benchmarks showing distances to fixed points of reference
_____ mean low water and mean high water lines (tidal)
_____ ordinary high water line (nontidal)
_____ location of vegetated wetlands at the project site
_____ shoreline, property lines, and location of adjacent property owners
_____ ebb and flood (tidal) or direction of flow (nontidal)
_____ channelward encroachment relative to mean high/mean low/ordinary high water lines
_____ dimensions of structure

Cross Section Drawing

_____ dimensions of the breakwater
_____ existing contours of the bottom
_____ mean high and mean low water levels (tidal)
_____ ordinary high water level (nontidal)

End View Drawing (if riprap or gabion baskets are used for construction)

_____ design and dimensions of structure (i.e. base & top widths, height, and slope)

_____ **Vicinity Map** The name of the map from which the vicinity map was taken and the exact location of the project site must be included (U.S.G.S. quad sheet, street map, or county map is preferred).

1. What type of materials are to be used for the construction of the breakwater?

_____

2. Are there similar structures in the vicinity of the project site? __ Yes __ No
If your answer is "yes", describe the type and location of the structures.

_____

_____

3. Will filter cloth be used? _____ Yes _____ No

APPENDIX L, Breakwaters

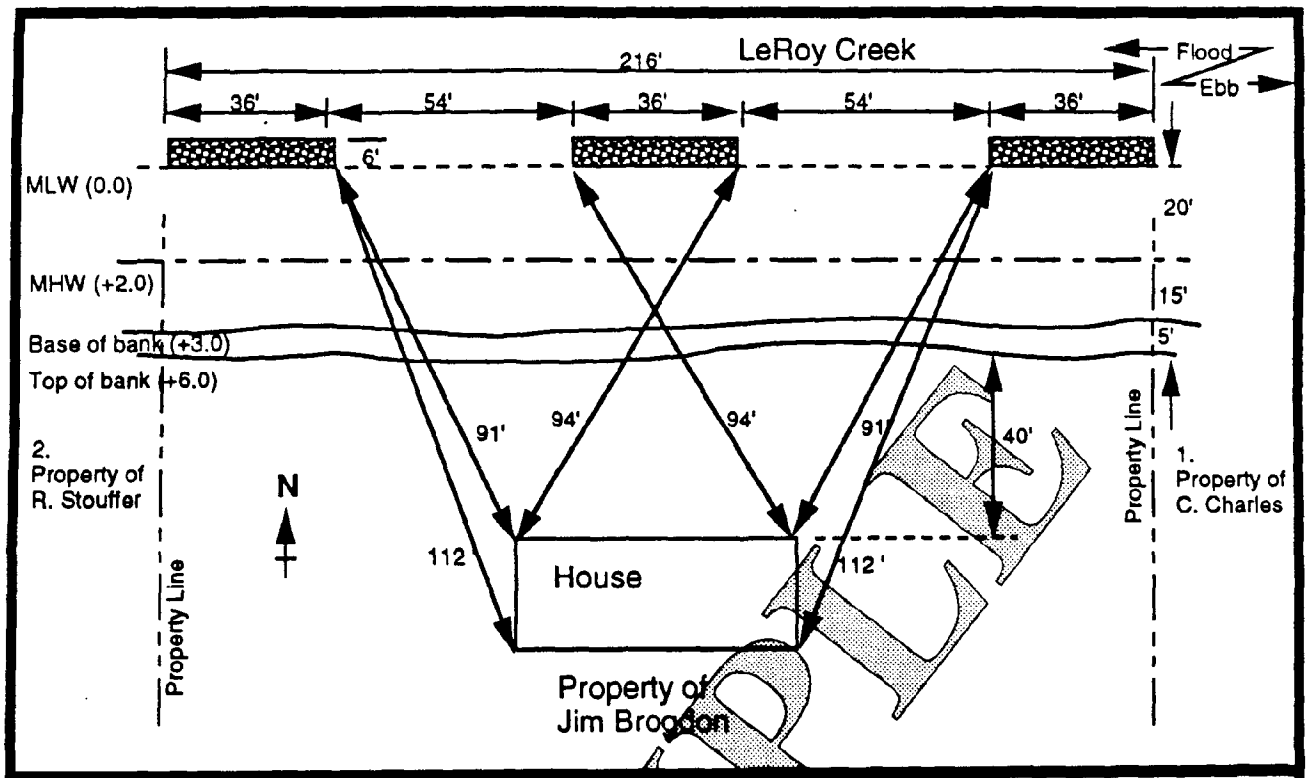

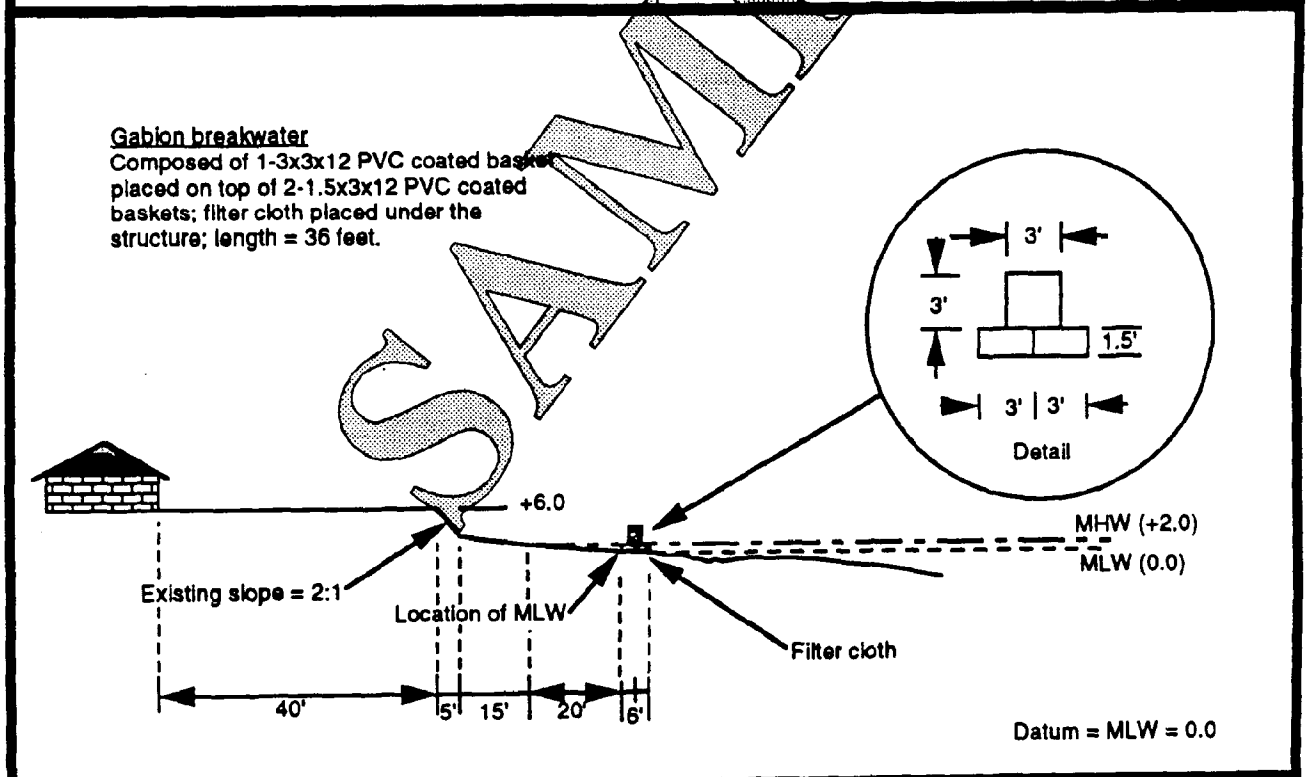

SAMPLE

Adjacent Property Owners:	Plan & Cross Sectional View	Proposed Breakwater project
1. C. Charles	Brogdon Breakwater Project	in LeRoy Creek at Lewis Bay
2. R. Stouffer	Scale 1" = 40'	County of North
		Applicant Jim Brogdon
		Sheet 1 of 1 Date 3-20-93

APPENDIX M -- BEACH NOURISHMENT

PLEASE COMPLETE THE CHECKLIST AND ANSWER THE QUESTIONS. THE DRAWINGS MUST CONTAIN THE FOLLOWING INFORMATION OR THEY WILL BE RETURNED AS INCOMPLETE:

Plan View Drawing

_____ north arrow
_____ waterway name
_____ mean low water and mean high water lines (tidal)
_____ ordinary high water line (nontidal)
_____ dimensions of the area to be nourished with benchmarks showing distances to fixed points of reference
_____ location of vegetated wetlands at the project site
_____ property lines and location of adjacent property owners
_____ existing structures
_____ location and dimensions of structures proposed to stabilize the area to be nourished
_____ channelward encroachment of the nourished area relative to mean high/mean low/ordinary high water
_____ location of marsh vegetation to be used for stabilization (if applicable)

Cross Section Drawing

_____ mean high and mean low water levels (tidal)
_____ ordinary high water level (nontidal)
_____ contour and slope of existing beach
_____ contour and slope of the nourished area
_____ groins, breakwaters or other structures existing or proposed to stabilize the nourished area
_____ elevation at the channelward end of the nourished area
_____ elevation of vegetation to be planted relative to mean high/mean low/ordinary high water

_____ **Vicinity Map** The name of the map from which the vicinity map was taken and the exact location of the project site must be included (U.S.G.S. quad sheet, street map, or county map is preferred).

1. Provide the following:

   a. source of material: _____

   b. volume of material: _____ cubic yards

   c. type and composition of material (e.g. sand 90%, clay 10%): _____

   d. mode of transportation to the project site (e.g. truck, pipeline, etc.): _____

2. Describe the type(s) of vegetation proposed for stabilization and the proposed planting schedule.

   _____

   _____

   _____

   _____

THE DEPARTMENT OF ENVIRONMENTAL QUALITY REQUIRES APPLICANTS TO SUBMIT THE ADDENDUM LOCATED AT THE END OF THIS APPLICATION

APPENDIX M, Beach Nourishment

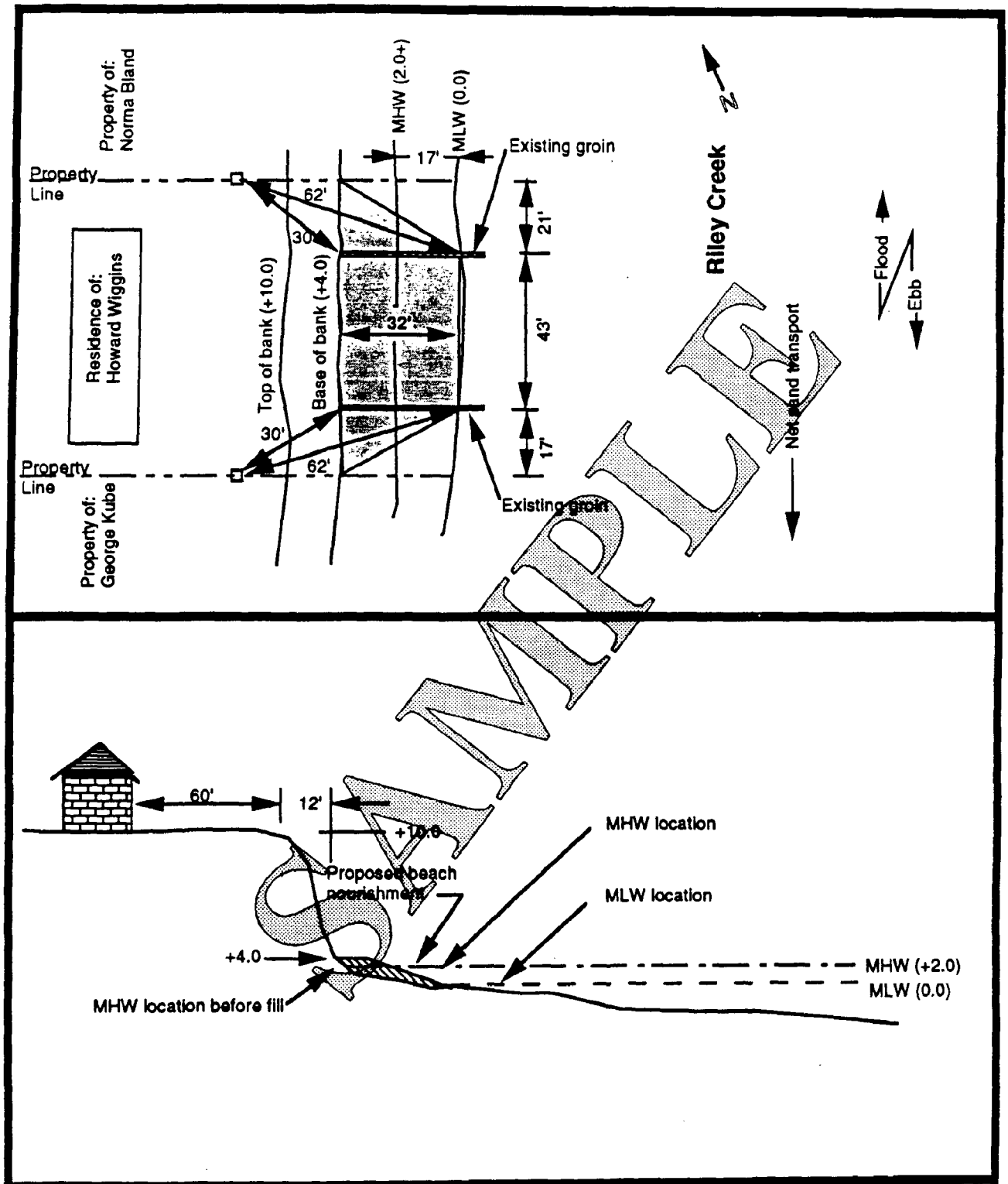

Adjacent Property Owners:	Plan & Cross Sectional View	Proposed beach nourishment project
1. Norma Bland	Beach Nourishment	in Riley Creek at
2. George Kube	Not to Scale	County of Hill
		Applicant Howard Wiggins
		Sheet 1 of 1 Date 3/8/92

APPENDIX N -- INTAKE-OUTFALL STRUCTURES

PLEASE COMPLETE THE CHECKLIST AND ANSWER THE QUESTIONS. THE DRAWINGS MUST CONTAIN THE FOLLOWING INFORMATION OR THEY WILL BE RETURNED AS INCOMPLETE:

Plan View Drawing

_____ north arrow
_____ waterway name
_____ existing structures
_____ dimensions of structure and benchmarks showing distances to fixed points of reference
_____ mean low water and mean high water lines (tidal)
_____ ordinary high water line (nontidal)
_____ location of vegetated wetlands at the project site
_____ shoreline, property lines, and location of adjacent property owners
_____ ebb and flood (tidal) or direction of flow (nontidal)
_____ channelward encroachment relative to mean high/mean low/ordinary high water lines

Cross Section Drawing

_____ existing contours of the bottom and banks
_____ intake or outfall pipe
_____ mean high and mean low water levels (tidal)
_____ ordinary high water level (nontidal)
_____ supporting structures
_____ splash apron, if applicable
_____ filter cloth

_____ **Vicinity Map** The name of the map from which the vicinity map was taken and the exact location of the project site must be included (U.S.G.S. quad sheet, street map, or county map is preferred).

1. Provide the following: type & size of pipe: _____ Intake _____ Outfall
   Intakes: daily rate of withdrawal: _____ mgd velocity: _____ fps
   screen mesh size: _____inches _____mm _____other (specify)
   Outfalls: daily rate of discharge: _____ mgd

2. If discharge will be thermally enhanced, provide the maximum temperature. _____

3. What is the average stream flow at the: Intake site? _____ cfs Outfall site? _____ cfs

4. What measures are proposed to prevent bank erosion?_____

5. Will any structure (wingwalls, splash apron, etc.) impact wetlands or subaqueous land? ___ Yes ___ No

   If your answer is yes, indicate the square footage and type of area(s) to be impacted:

	Tidal	Nontidal
Vegetated wetlands	sf	sf
Non-vegetated wetlands	sf	----------
Subaqueous land	sf	sf

5. Can the entire structure or any part of it be placed landward of all wetlands? If no, please explain.

6. What is the approximate drainage area and average stream flow? _____ square miles _____ cfs

THE DEPARTMENT OF ENVIRONMENTAL QUALITY REQUIRES APPLICANTS TO SUBMIT THE ADDENDUM LOCATED AT THE END OF THIS APPLICATION

APPENDIX N, Intake / Outfall Structures

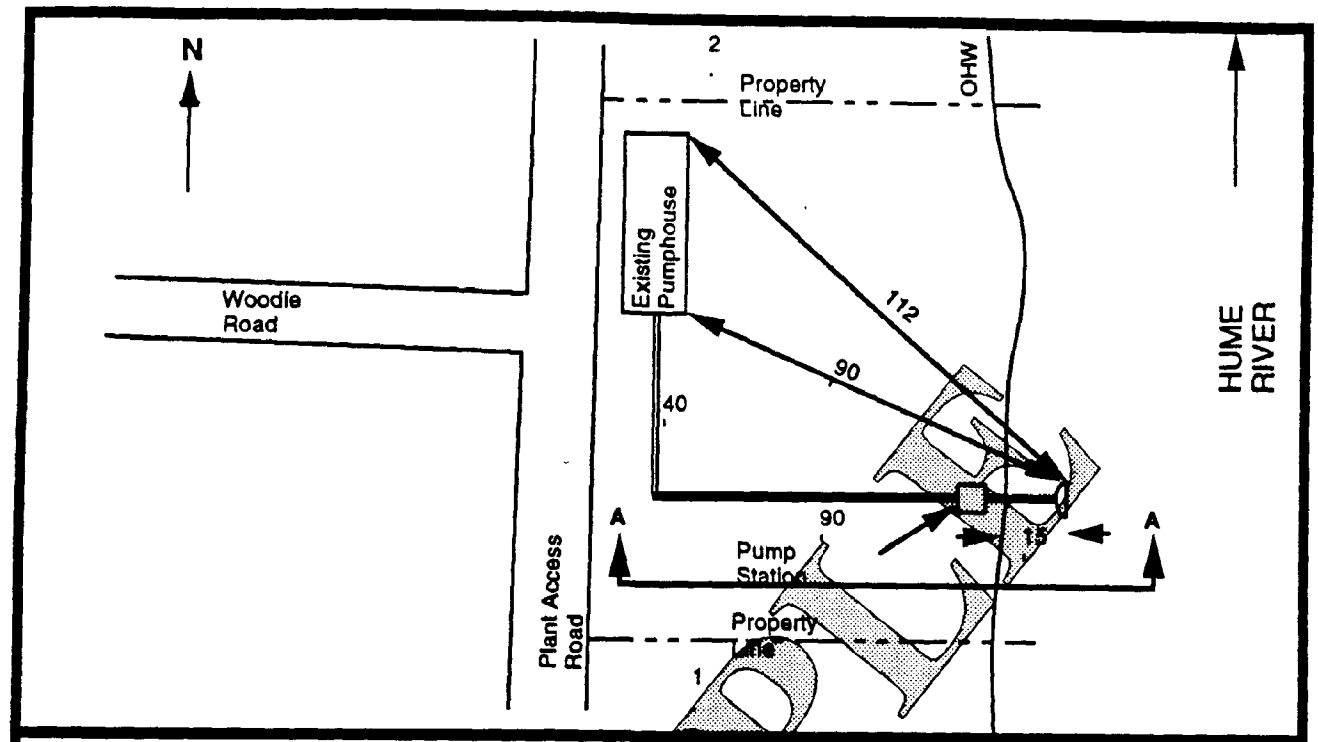

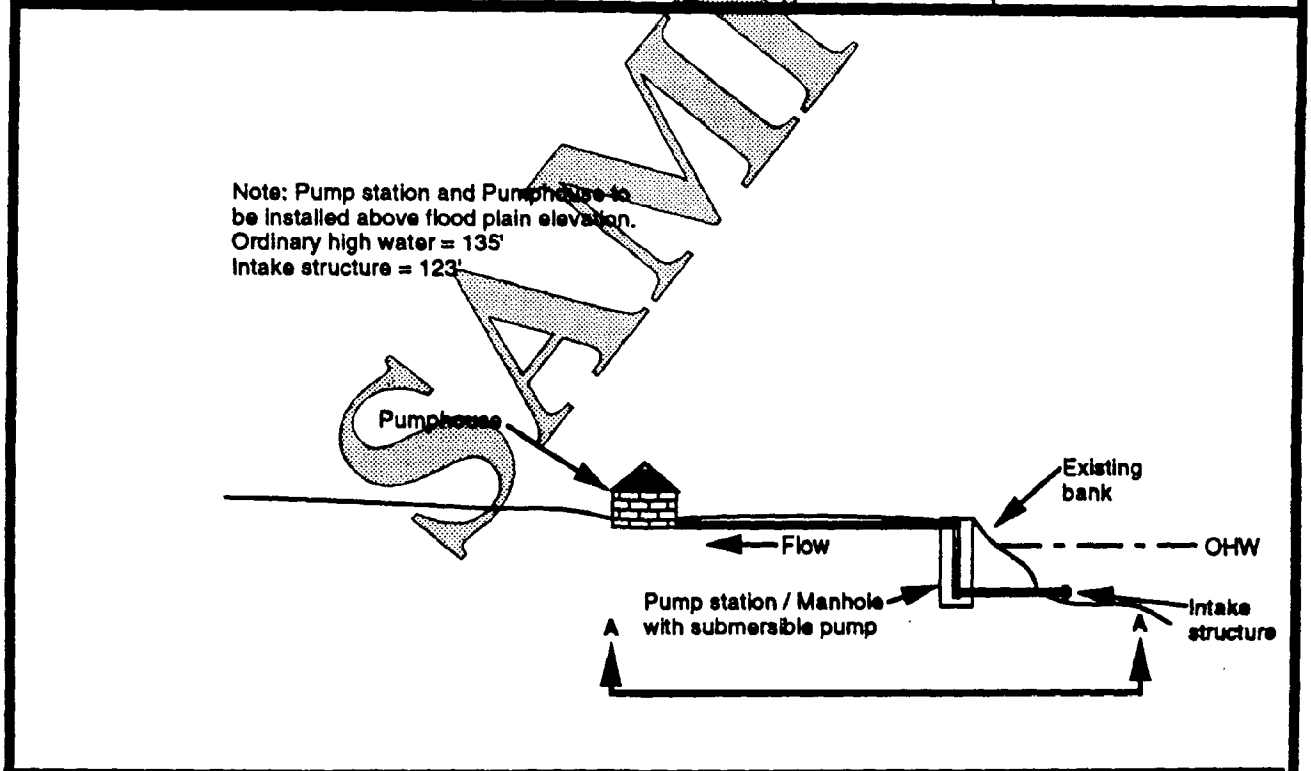

SAMPLE

Adjacent Property Owners: 1. A. Spingarn 2. A. Jennings	**Plan & Cross Sectional View** Golf Course Water Intake Project Scale 1"= 40'	Proposed Irrigaton project in Hume River at Kube Cove County of Barnard Applicant P. Minkin Sheet 1 of 1 Date 3-20-93

APPENDIX O -- NONTIDAL STREAM CHANNEL MODIFICATIONS

PLEASE COMPLETE THE CHECKLIST AND ANSWER THE QUESTIONS. THE DRAWINGS MUST CONTAIN THE FOLLOWING INFORMATION OR THEY WILL BE RETURNED AS INCOMPLETE:

Plan View Drawing

_____ north arrow
_____ waterway name
_____ ordinary high water line
_____ location, length and width of the existing channel
_____ location, length and width of the proposed channel
_____ benchmarks showing distances to fixed points of reference
_____ width of the stream (measuring from ordinary high water to ordinary high water)
_____ location of existing and proposed non-vegetated or vegetated wetlands, bars, islands, riffle and pool complexes or other special aquatic sites at the project site
_____ shoreline, property lines, and location of adjacent property owners
_____ direction of flow
_____ location & dimensions of bank stabilization structures

Cross Section Drawing (Prepare one drawing for the existing channel and one for the proposed channel)

_____ existing and proposed stream channels including depth,base width and top width
_____ dimensions and slope of bank stabilization structures
_____ filter cloth
_____ ordinary high water level
_____ existing contours of the bottom
_____ location and dimensions of low flow channel (if applicable)

_____ **Vicinity Map** The name of the map from which the vicinity map was taken and the exact location of the project site must be included (U.S.G.S. quad sheet, street map, or county map is preferred).

1. Provide the following:
   a) approximate normal flow rate and drainage area of the existing water body :
   _____ cfs _____ square miles

   b) approximate normal flow rate and drainage area of the new or modified water body
   : _____ cfs _____ square miles

   c) method used to stabilize the banks: _____

   _____

   d) type & approximate composition percentage of the existing stream bed (e.g. cobble 35%, rock 45%, sand 20%, etc.): _____

2. Will low flow channels be maintained? _____ Yes _____ No

3. Will any structures be placed in the stream to create riffles, pools, meanders, etc? If "Yes" please explain.

   _____

   _____

THE DEPARTMENT OF ENVIRONMENTAL QUALITY REQUIRES APPLICANTS TO SUBMIT THE ADDENDUM LOCATED AT THE END OF THIS APPLICATION

APPENDIX O, Nontidal Stream Channel Modifications

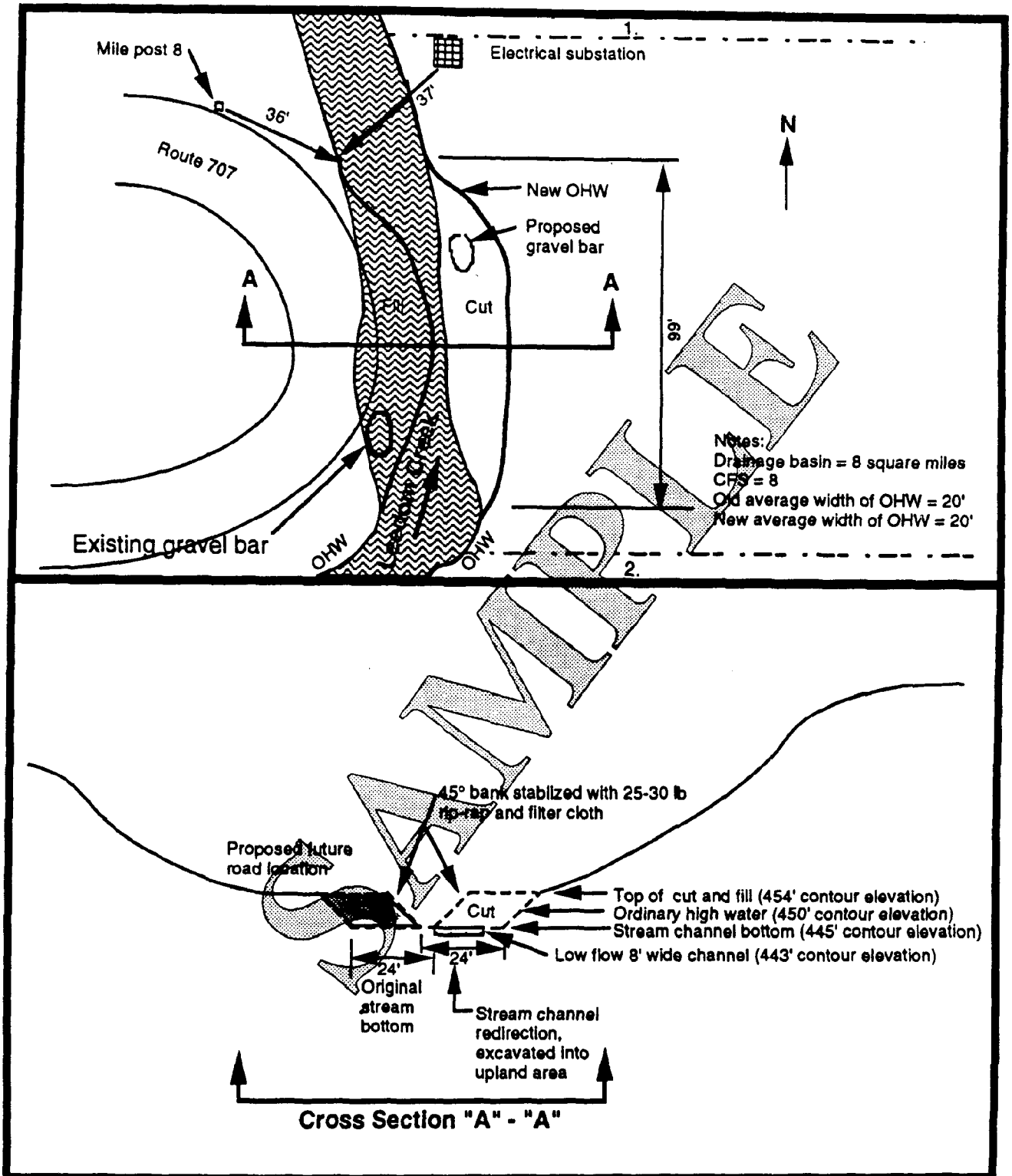

SAMPLE

Adjacent Property Owners:	Plan & Cross Sectional View	Proposed stream channel modification
1. J. G. Smith	Construction site	in Leedom Creek at Big Mount
2. C. E. Barton	Scale 1" = 40'	County of Thomas
		Applicant R. Henderson
		Sheet 1 of 1 Date 1/29/92

APPENDIX P -- IMPOUNDMENTS/DAMS

PLEASE COMPLETE THE CHECKLIST AND ANSWER THE QUESTIONS. THE DRAWINGS MUST CONTAIN THE FOLLOWING INFORMATION OR THEY WILL BE RETURNED AS INCOMPLETE:

Plan View Drawing

_____ north arrow
_____ waterway name
_____ existing and proposed structures
_____ dimensions of structure and benchmarks showing distances to fixed points of reference
_____ ordinary high water line
_____ location of vegetated wetlands at the project site
_____ shoreline, property lines, and location of adjacent property owners
_____ direction of flow
_____ width of the waterway (measuring from ordinary high water to ordinary high water
_____ risers
_____ emergency spillway, if applicable

Cross Section Drawing (Stream)

_____ base width and height of structure
_____ existing contours of the bottom
_____ normal pool elevation and design high and low water elevations, for dams with fluctuating water levels (e.g. hydropower or water supply reservoirs)
_____ risers
_____ emergency spillway, if applicable

_____ **Vicinity Map** Including the name of the map from which the vicinity map was taken and the exact location of the project site.
_____ map showing the area to be flooded (U.S.G.S. quad sheet or other topographic map is preferred).

1. Materials to be used for construction (earth, rock, concrete, etc.)? _____

2. What will be the impoundment's: a) storage capacity: _____ acre-feet b) surface area: _____ acres

3. What is the: a) current average flow? _____ cfs b) proposed outflow? _____ cfs
   c. will the impoundment structure be designed to pass a minimum flow at all times? ___ Yes ___ No
   If "Yes", what will be the minimum rate of flow? _____ cfs

4. What is the drainage area of the water body upstream of the proposed impoundment? _____ square miles

5. Does your project comply with State Dam Safety Criteria? ____ Yes ____ No If your answer is "No" or "Uncertain", contact the Bureau of Flood Plain Protection at telephone (804) 371-6095.

6. a. What will be the area of waters or wetlands affected/flooded by the impoundment? _____ acres
   b. How much of impoundment structure will be located on the stream bed? _____ square feet

7. Are fish ladders being proposed to accommodate the passage of fish? ____ Yes ____ No

THE DEPARTMENT OF ENVIRONMENTAL QUALITY REQUIRES APPLICANTS TO SUBMIT THE ADDENDUM LOCATED AT THE END OF THIS APPLICATION

APPENDIX P, Impoundments / Dams

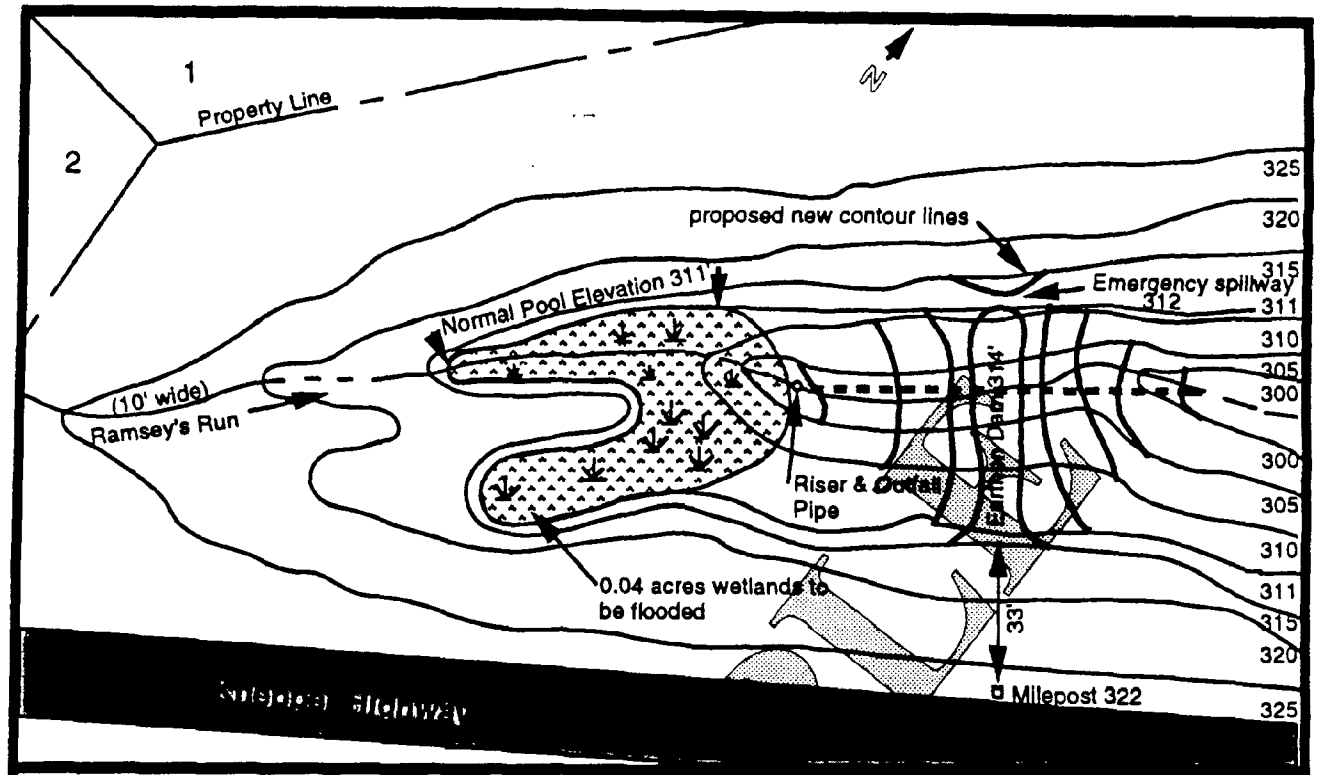

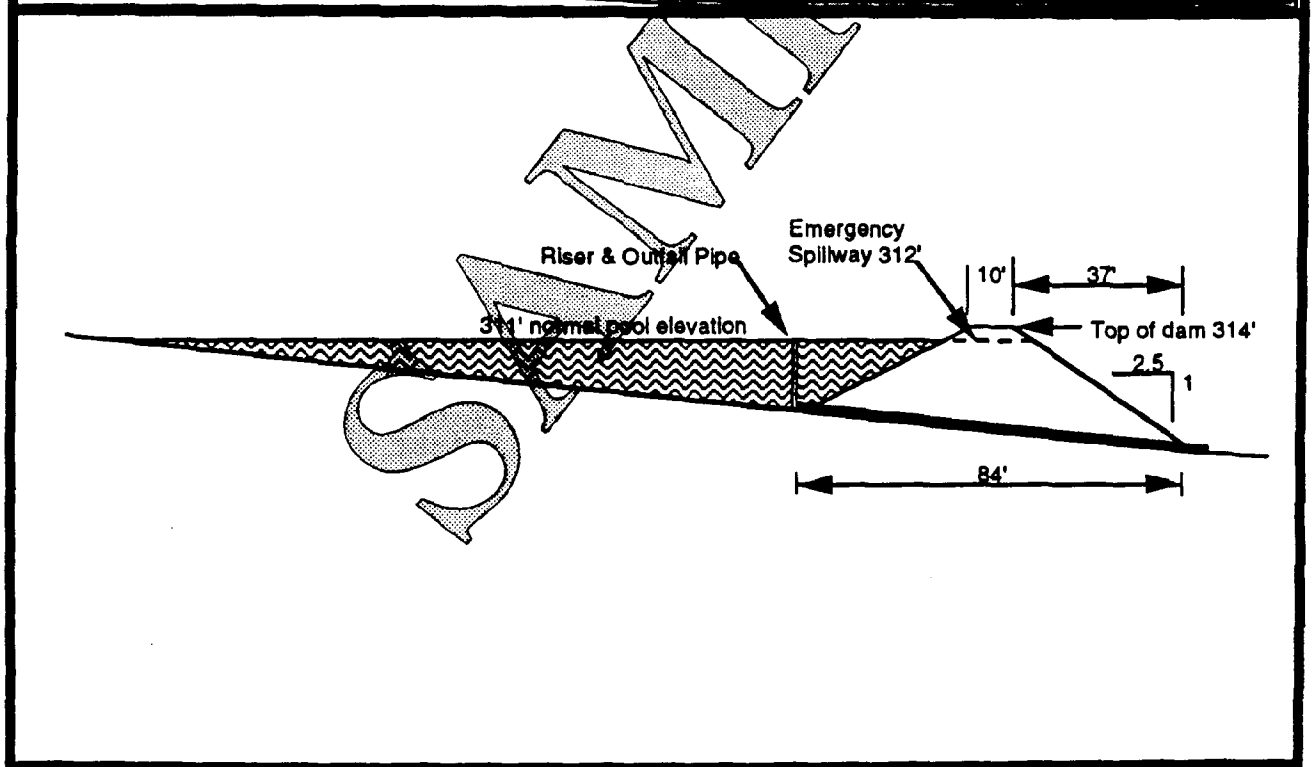

SAMPLE

Adjacent Property Owners:	Plan & Cross Sectional View	Proposed recreational / farm pond
1. J. G. Smith	O. McDonalds Pond	in Ramsey's Run at
2. C. E. Barton	Scale 1" = 40'	County of West
		Applicant O. McDonald
		Sheet 1 of 1 Date 1/29/92

APPENDIX Q -- UTILITY CROSSINGS

PLEASE COMPLETE THE CHECKLIST AND ANSWER THE QUESTIONS. THE DRAWINGS MUST CONTAIN THE FOLLOWING INFORMATION OR THEY WILL BE RETURNED AS INCOMPLETE:

Plan View Drawing

_____ north arrow
_____ waterway name
_____ existing and proposed structures
_____ dimensions of structures and benchmarks showing distances to fixed points of reference
_____ mean low water and mean high water lines (tidal)
_____ ordinary high water line (nontidal)
_____ location of vegetated wetlands at the project site
_____ property lines on both sides of stream with location of adjacent property owners
_____ width of the waterway (measuring from mean high water to mean high water (tidal) or ordinary high water to ordinary high water (nontidal)
_____ ebb and flood (tidal) or direction of flow (nontidal)
_____ type and location of support structures (e.g. towers, poles, platforms)
_____ location of temporary stockpiles for excavated material (if applicable)
_____ location of temporary construction access
_____ location of utility line/maintenance right of way

Cross Section Drawing

_____ mean low water level (tidal)
_____ ordinary high water level (nontidal)
_____ existing contours of the bottom and bank
_____ vertical distance above mean high/mean low/ordinary high water for overhead crossings
_____ depth below stream bottom for submarine crossings
_____ distance that the structure will cross the waterbody relative to mean low water/ordinary high water

_____ **Vicinity Map** The name of the map from which the vicinity map was taken and the exact location of the project site must be included (U.S.G.S. quad sheet, street map, or county map is preferred).

1. Describe the materials to be used and the method of construction in the order in which the construction will be accomplished: _____

_____

2. For overhead crossings, if there are overhead crossings or bridges in the area, how high are they relative to mean high/low water/ordinary high water? _____

3. If the project is a power line crossing, what will be the nominal system voltage of the line? _____

4. Will there be an excess of excavated material? ___ Yes ___ No If yes, please describe the method of transporting and disposing of the material. _____

_____

5. What is the approximate drainage area and average stream flow? _____ square miles _____ cfs

6. Will excess material be temporarily stockpiled in wetlands? _____ Yes _____ No
If "Yes", will the stockpiled material be placed on filter fabric or some other type of impervious surface?
____ Yes ____ No

THE DEPARTMENT OF ENVIRONMENTAL QUALITY REQUIRES APPLICANTS TO SUBMIT THE ADDENDUM LOCATED AT THE END OF THIS APPLICATION

APPENDIX Q, Utility Crossings

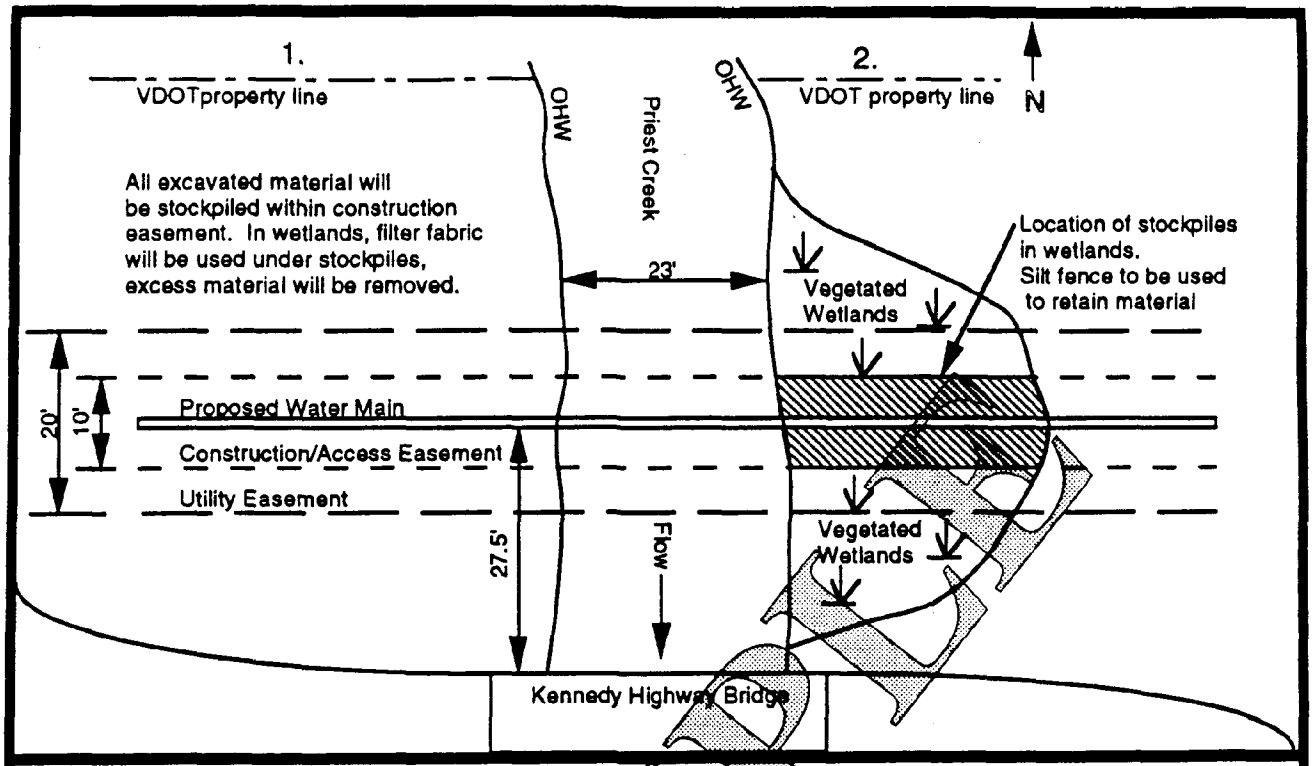

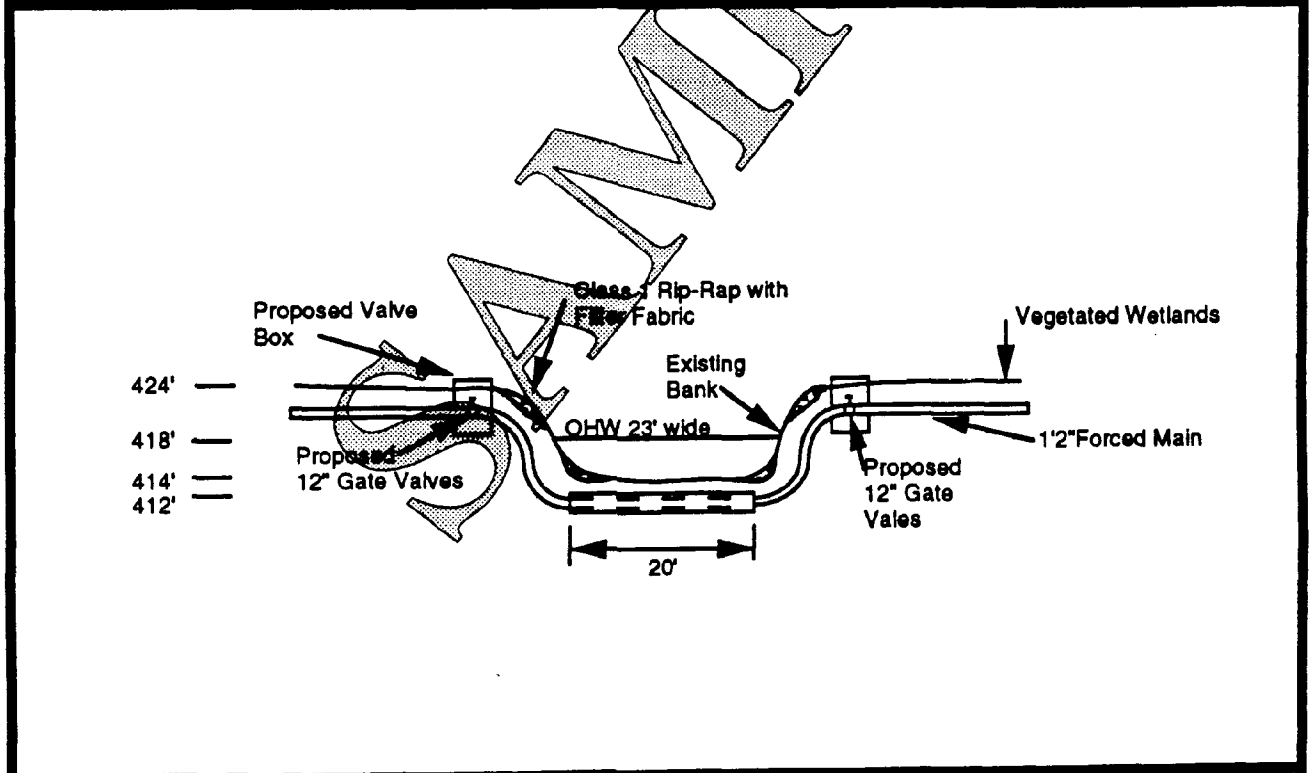

SAMPLE

Adjacent Property Owners:	Plan & Cross Sectional View Jennings Sewage Line Scale 1" = 20'	Proposed Utility Line Crossing
1. C. Schulz		In Priest Creek
2. K. Mayne		County of West
		Applicant Arthur Jennings
		Sheet 1 of 1 Date 1/29/92

APPENDIX R -- ROAD CROSSINGS

PLEASE COMPLETE THE CHECKLIST AND ANSWER THE QUESTIONS. THE DRAWINGS MUST CONTAIN THE FOLLOWING INFORMATION OR THEY WILL BE RETURNED AS INCOMPLETE:

Plan View Drawing

_____ north arrow
_____ waterway name
_____ existing and proposed structures or fill
_____ dimensions of structures and benchmarks showing distances to fixed points of reference
_____ mean low water and mean high water lines (tidal)
_____ ordinary high water line (nontidal)
_____ location of vegetated wetlands at the project site
_____ property lines on both sides of stream with location of adjacent property owners
_____ width of the waterway (measuring from mean high water to mean high water (tidal) or ordinary high water to ordinary high water (nontidal)
_____ ebb and flood (tidal) or direction of flow (nontidal)
_____ location and type of support structures

Cross Section Drawing

_____ mean high and low water levels levels (tidal)
_____ ordinary high water level (nontidal)
_____ existing contours of the stream beds and bank
_____ dimensions relative to mean high water or ordinary high water
_____ height of bridge, if applicable
_____ culverts (indicate size), if applicable
_____ culvert invert elevations

_____ **Vicinity Map** The name of the map from which the vicinity map was taken and the exact location of the project site must be included (U.S.G.S. quad sheet, street map, or county map is preferred).

NOTE: Virginia Department of Transportation (VDOT) standards require that the backwater for a 100 year storm not exceed 1 foot for all roads, culverts and bridges.

1. On a separate sheet describe: the materials to be used, the method of construction, and the order in which the construction will be accomplished including cofferdams (if applicable).

2. What is the approximate drainage area and average flow rate of the stream? _____ sq. miles _____ cfs

3. Will any fill will be located on wetlands or subaqueous land? _____ Yes _____ No
If your answer is yes, indicate the square footage and type of area(s) to be impacted:

	Tidal	Nontidal
Vegetated wetlands	sf	sf
Non-vegetated wetlands	sf	----------
Subaqueous land	sf	sf

4. Have you conducted hydrologic/hydraulic studies to verify adequacy of the culverts?
__ Yes __ No If your answer is "Yes", please attach a copy of the study/report.

5. If the project is a bridge crossing and there are similar crossings in the area, what is the vertical distance above mean high/low water or ordinary high water for the other crossings ? _____

THE DEPARTMENT OF ENVIRONMENTAL QUALITY REQUIRES APPLICANTS TO SUBMIT THE ADDENDUM LOCATED AT THE END OF THIS APPLICATION

APPENDIX R, Road Crossings

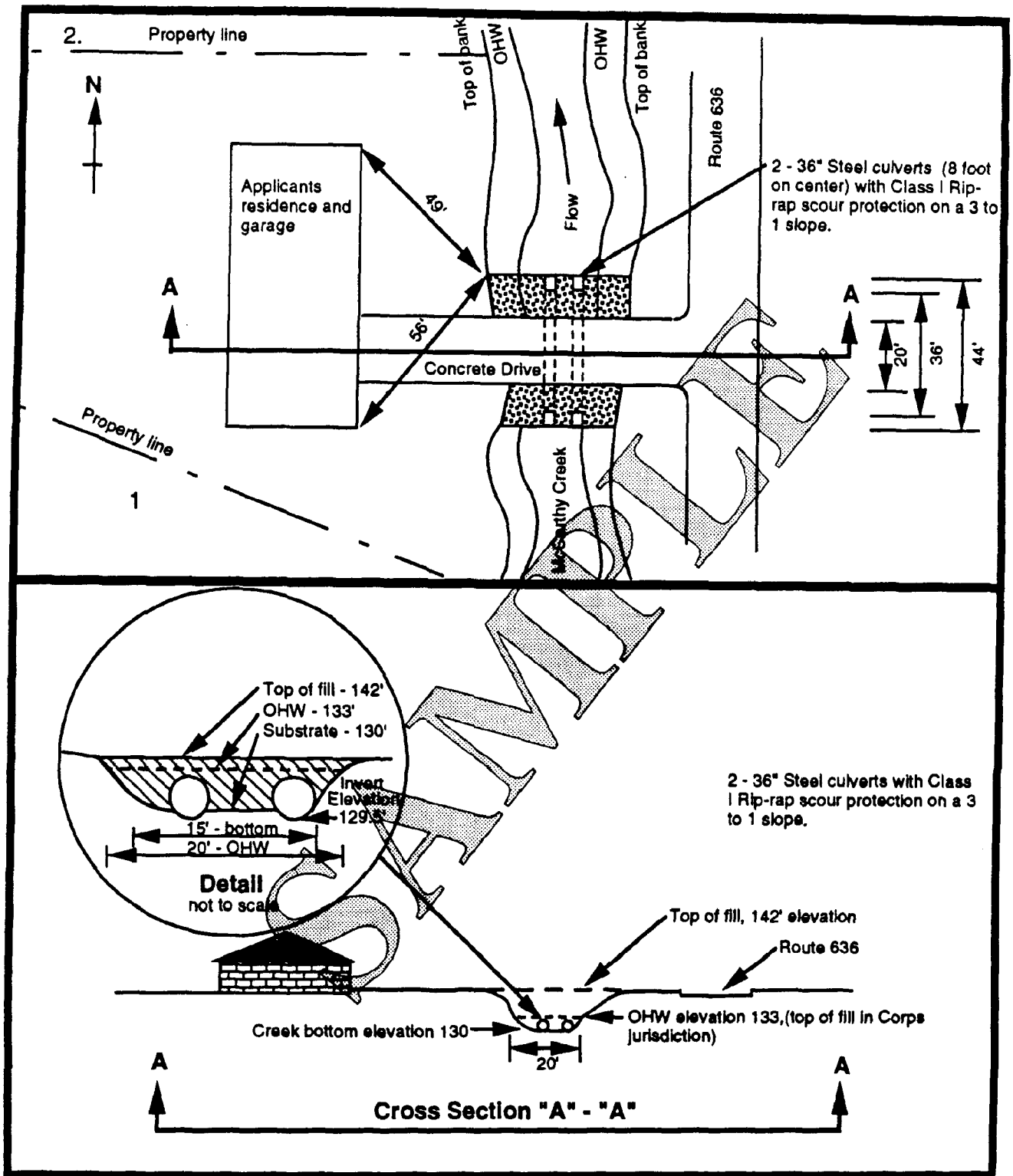

Adjacent Property Owners:	Plan & Cross Sectional View	Proposed road crossing project
1. Ned Burger	Road Crossing	in McCarthy Creek at N/A
2. Joe Baumer	Scale 1" = 40'	County of Jones
		Applicant J. Rubelman
		Sheet 1 of 1 Date 3-27-93

AGENT CERTIFICATION OF AUTHORIZATION

I _____ hereby certify that I have authorized _____ to act on my behalf and
(APPLICANT'S NAME) (AGENT'S NAME)

take all actions necessary to the processing, issuance, and acceptance of this permit and any and all standard and special conditions attached.

We hereby certify that the information submitted in this application is true and accurate to the best of our knowledge.

_____ _____
APPLICANT'S SIGNATURE AGENT'S SIGNATURE

_____ _____
DATE DATE

Completion of this form will allow the agent to sign all future application correspondence. Also, please provide the name(s) and complete address(es) of all legal property owner(s) as shown on your recorded deed.

NAO FM 1022, 30 APR 93

ADJACENT PROPERTY OWNER'S ACKNOWLEDGEMENT FORM

I, _____, own land next to or across the water from
(ADJACENT PROPERTY OWNER'S NAME PRINTED)

the land of _____. I have reviewed the applicant's project drawings dated
(APPLICANT'S NAME)

_____ to be submitted for all necessary Local, State, and Federal permits.
(DATE)

I ___HAVE NO COMMENT _____DO NOT OBJECT _____DO OBJECT to the project.

The applicant has agreed to contact me for additional comments if the proposal changes prior to construction of the project.

(Before signing this form, please be sure you have checked the appropriate box above.)

_____ _____
ADJACENT PROPERTY OWNER'S SIGNATURE DATE

NOTE: IF YOU OBJECT TO THE PROPOSAL - THE REASONS YOU OPPOSE THE PROJECT MUST BE SUBMITTED TO VMRC IN WRITING. AN OBJECTION WILL NOT NECESSARILY RESULT IN DENIAL OF THE PROJECT, BUT, VALID COMPLAINTS WILL BE GIVEN FULL CONSIDERATION DURING THE PERMIT REVIEW PROCESS.

NAO FM 1020, Rev 30 APR 93

NOTE: Please photocopy this form if additional copies are needed.

APPLICANT'S AND CONTRACTOR'S ACKNOWLEDGEMENT FORM

I, _____ have contracted _____
(APPLICANT'S NAME) (CONTRACTOR/COMPANY NAME)

to perform the work described in the application signed and dated _____.
(DATE)

We will read and abide by all conditions as set forth in all Local, State, and Federal permits as required for this project. We understand that failure to follow the conditions of the permits may constitute a violation of applicable Local, State, and Federal statutes and that we will be liable for any civil and/or criminal penalties imposed by these statutes. **SEE FEDERAL PENALTIES FOR VIOLATIONS AND RELATED STATE CODES.**

In addition, we agree to make available a copy of any permit to any regulatory representative visiting the project site to ensure permit compliance. If we fail to provide the applicable permit upon request, we understand that the representative will have the option of stopping our operation until it has been determined that we have a properly signed and executed permit and are in full compliance with all terms and conditions.

_____ _____
APPLICANT'S SIGNATURE DATE

_____ _____
CONTRACTOR'S SIGNATURE AND TITLE DATE
(if applicable)

_____ _____
CONTRACTOR'S NAME (PRINTED/TYPED) CONTRACTOR'S OR FIRM'S ADDRESS
OR NAME OF FIRM

NAO FM 1021, Rev 30 APR 93

Regulatory Agencies

Federal:

U. S. Army Corps of Engineers
803 Front Street
Norfolk, Virginia 23510-1096
(804) 441-7652

The Corps of Engineers is responsible for administering a permit program pursuant to Section 10 of the Rivers & Harbors Act of 1899 and Section 404 of the Clean Water Act. Specifically, permits are required for construction, dredging, and filling activities proposed by landowners, businesses, developers, and government agencies in tidal and nontidal rivers, creeks, and tidal and nontidal wetlands. In evaluating projects, the Corps considers all comments received from the public and government agencies and conducts a public interest review that weighs foreseeable project benefits against foreseeable project detriments.

Field Offices:

Blackstone Field Office
Post Office Box 109
Blackstone, Virginia 292-6617
(804) 292-6617

Christiansburg Field Office
Tudor Square, Suite 9
209-211 Roanoke Street
Christiansburg, Virginia 24073
(703) 382-6740

Dumfries Field Office
Plaza South, Suite 102
138 Graham Park Road
Dumfries, Virginia 22026
(703) 221-6967

Eastern Shore Field Office
General Delivery
Accomac, Virginia 23301
(804) 787-3133

Fredericksburg Field Office
Breezewood Office Park
10703 Courthouse Road, #270
Fredericksburg, Virginia 22408
(703) 898-3568

Lynchburg Field Office
Second Floor
7605 Timberlake Road
Lynchburg, Virginia 24502
(804) 237-2145

Northern Neck Field Office
Post Office Box 459
Lively, Virginia 22507
(804) 462-5382

Richmond Field Office
Hanover Business Center
305-B Ashcake Road
Ashland, Virginia 23005
(804) 752-7464/7484

State:

Virginia Marine Resources Commission
Habitat Management Division
Post Office Box 756
2600 Washington Avenue
Newport News, Virginia 23607-0756
(804) 247-2200

The Virginia Marine Resources Commission serves the citizenry of the Commonwealth of Virginia by combining a public interest review process with effective management, regulation and protection of the State's marine fisheries, submerged lands (state wide) and coastal resources (tidal wetlands and coastal sand dunes/beaches). It is the goal of the Commission's Habitat Management Division to act as stewards of the Commonwealth's submerged lands and ensure the protection and wise use of these coastal lands and natural resources through the implementation of a regulatory review process and permitting program.

Department of Environmental Quality
Post Office Box 11143
Richmond, Virginia 23230-5000
(804) 527-5061

One branch of the Department of Environmental Quality, the Virginia Water Protection Program, is responsible for the administration of the water quality programs delegated to the Commonwealth under the Clean Water Act and as required by the State Water Control Law. Under both State and Federal Law, the Department functions as the principal water quality management agency within the Commonwealth of Virginia. The goal of the Virginia Water Protection Program is to ensure the protection of the beneficial uses of State waters including nontidal wetlands, prevent degradation of valuable water resources and to work toward the restoration of waters whose quality has been degraded. The Department issues permits for all activities which may result in the physical, biological or chemical alteration of State waters.

Resource Agencies

Federal:

U. S. Environmental Protection Agency
Wetlands Section
841 Chestnut Street 3ES42
Philadelphia, PA 19107
(215) 597-3360

The Environmental Protection Agency oversees compliance with federal environmental laws, including the Clean Water Act, the Clean Air Act, Superfund, the National Environmental Policy Act, etc. The Agency provides advice and recommendations to the Corps of Engineers to ensure that all authorized projects avoid and minimize adverse environmental impacts. Important features considered during Clean Water Act project reviews include but are not limited to impacts on water quality, flood storage, fisheries, and wildlife habitat.

U. S. Fish & Wildlife Service
Virginia Field Office
Post Office Box 480
Mid-County Centre, U. S. Route 17
White Marsh, Virginia 23183
(804) 693-6694

The objectives of the Department of the Interior and the U. S. Fish & Wildlife Service (Service) are to conserve fish and wildlife resources and their habitats and to protect public trust rights of use and enjoyment associated with waters of the United States. The Service provides advice and recommendations to the Corps of Engineers to ensure that all authorized projects are the least environmentally damaging alternative and in the public's interest in safeguarding fish and wildlife resources from unnecessary loss and degradation. The Service is also responsible for assisting the Corps to meet their responsibilities under Section 7 of the Endangered Species Act

National Marine Fisheries Service
Management Division
Oxford Laboratory
Oxford, Maryland 21654
(301) 226-5771

President's Advisory Council on Historic Preservation
The Old Post Office Building
1100 Pennsylvania Avenue, Suite 809
Washington, DC 20004
(202) 786-0505

The President's Advisory Council on Historic Preservation (Council) provides comments to the Corps of Engineers (Corps) on undertakings that affect historic properties. The Council's goal is to accommodate historic preservation concerns with the needs of the Corps' Regulatory program through the Section 106 process. Section 106 of the National Historic Preservation Act (NHPA) requires federal agencies with jurisdiction over federally licensed undertakings to take into account the effects of their undertakings on historic properties (defined as districts, buildings, structures, or archaeological sites which are included on or are eligible for inclusion on the National Register of Historic Places) and to offer the Council the opportunity to comment on the project's effects. The Council encourages consideration of historic preservation concerns during the early planning stages of a project through consultation with the Corps, the State Historic Preservation Officer and other interested persons.

State:

Virginia Department of Game & Inland Fisheries
Environmental Officer
Post Office Box 11104
Richmond, Virginia 23230-1104
(804) 367-8999

The Virginia Department of Game & Inland Fisheries (VDGIF) is the primary wildlife and freshwater management agency in the Commonwealth, and has legal jurisdiction over state or federally endangered or threatened species, excluding insects and plants. VDGIF is a consulting agency under the U.S. Fish & Wildlife Coordination Act (48 Stat. 401, as amended; 16 U.S.C. 661 et seq.), and provides environmental analysis of projects or permit applications coordinated through the Virginia Marine Resources Commission, the Virginia State Water Control Board, the U.S. Army Corps of Engineers, the Federal Energy Regulatory Commission, and other state or federal agencies. The department's role in these procedures is to determine likely impacts on fish and wildlife resources and habitats, and to recommend appropriate measures to avoid, reduce, or mitigate for those impacts. Primary issues of concern to VDGIF include impacts upon upland, wetland, aquatic fish & wildlife and their habitats; protection of instream flow; endangered or threatened species; and impacts upon streams or other surface waters and interconnected groundwaters. Sediment and erosion control, water quality protection, and disposal or handling of hazardous or toxic materials are also of concern to the Department.

Virginia Institute of Marine Science
Wetlands Section
Gloucester Point, Virginia 23062
(804) 642-7000

The Wetlands Advisory Program of the Virginia Institute of Marine Science (VIMS) provides scientific and technical advice for the use of all participants in the shoreline permit process. To accomplish this, a written impact assessment report is prepared for most projects requiring a wetlands or subaqueous bed permit. The report describes the marine environmental impacts of the proposed activity and suggests alternatives and/or modifications which will lessen any significant adverse effects to aquatic resources resulting from the proposal. Copies of the advisory report are provided to the applicant and/or the agent and all regulatory/resource agencies.

Virginia Department of Conservation & Recreation
Division of Soil & Water Conservation
Shoreline Erosion Advisory Service (SEAS)
Post Office Box 1024
Gloucester Point, Virginia 23062
(804) 642-7121

The Shoreline Erosion Advisory Service is a technical section of the Department of Conservation & Recreation. The SEAS program provides technical advice regarding environmentally sound protective measures for shoreline erosion control. The SEAS service is available upon request to property owners throughout Virginia's tidal region.

Virginia Department of Historic Resources
221 Governor Street
Richmond, Virginia 23219
(804) 786-3143

The Virginia Department of Historic Resources (VDHR) represents the interests of the Commonwealth and its citizens in preserving Virginia's cultural heritage. The director of the VDHR is the State Historic Preservation Officer (SHPO). The role of the SHPO is to assist the Corps in meeting its responsibilities under Section 106 of the National Historic Preservation Act. The VDHR assists the Corps with identifying historic properties, with assessing effects upon them and in considering alternatives to reduce, avoid or mitigate a project's adverse effects.

Local Regulatory Agencies (Wetlands Boards)

Accomack County:	(804) 787-5721	New Kent County:	(804) 966-9861
Cape Charles County:	(804) 331-3259	Newport News:	(804) 247-8437
Charles City County:	(804) 829-9217	Norfolk:	(804) 441-2152
Chesapeake:	(804) 547-6248	Northampton County:	(804) 678-5872
Colonial Heights:	(804) 520-9275	Northumberland County:	(804) 580-8910
Essex County:	(804) 443-4951	Poquoson:	(804) 868-7151
Fairfax County:	(703) 324-1210	Portsmouth:	(804) 393-8836
Fredericksburg:	(703) 372-1179	Prince William County:	(703) 335-6830
Gloucester County:	(804) 693-4040	Richmond County:	(804) 333-3415
Hampton:	(804) 727-6142	Stafford County:	(703) 659-8668
Hopewell:	(804) 541-2267	Suffolk:	(804) 934-3111
Isle of Wight:	(804) 357-3191	Surry County:	(804) 294-5210
James City County:	(804) 253-6622	Virginia Beach:	(804) 426-5790
King George County:	(703) 775-7111	Westmoreland County:	(804) 493-0121
King William County:	(804) 769-4927	West Point:	(804) 843-3330
Lancaster County:	(804) 462-5220	Williamsburg:	(804) 220-6130
Mathews County:	(804) 725-5025	York County:	(804) 890-3538
Middlesex County:	(804) 758-4305		

Soil & Water Conservation's Erosion & Sedimentation Control Offices

Abingdon
252 W. Main Street, Suite 3
Abingdon, Virginia 24210
(703) 676-5528

Dublin
Post Office Box 1506
Dublin, Virginia 24084
(703) 831-4008

Staunton
Route 4, Box 99-J
Staunton, Virginia 24401
(703) 322-9991

Tappahannock
Post Office Box 1425
Tappahannock, Virginia 22560
(804) 443-6752

Chase City
411 Boyd Street
Chase City, Virginia 23924
(804) 372-2191

Richmond
217 Governor Street, 3rd Floor
Richmond, Virginia 23219
(804) 371-7489

Suffolk
1548 Holland Road
Suffolk, Virginia 23434
(804) 925-2468

Warrenton
98 Alexandria Pike, Suite 33
Warrenton, Virginia 22186
(703) 347-6420

These offices may be able to provide advice on erosion and sedimentation controls for shoreline and streambank erosion as well as storm water management.

FEDERAL WETLANDS DETERMINATIONS

Delineations are to be performed using the appropriate method as directed in the current Federal manual.

If you would like the Corps to verify a wetlands delineation, the following information should be provided:

A Plan View Drawing showing:

all proposed development (if available)
location of the wetlands at the site with benchmarks
property lines and location of adjacent property owners
existing structures at the site
sampling locations
location of wells (if applicable)

Please indicate whether the boundaries of the wetland at the project site have been flagged.

A Vicinity Map with the name of the map from which it was taken and the exact location of the project site should be included (U.S.G.S. quad sheet, or other topographic map is preferred).

In addition to the drawings, as much of the following information as possible should be provided.

Completed data sheets
Aerial photograph(s) of the site
Soil survey with soil descriptions
National Wetlands Inventory Map
FEMA map
Site history/Prior land use
Any other supporting documents to be considered

FEDERAL PENALTIES FOR VIOLATIONS AND RELATED STATE CODES

U. S. ARMY CORPS OF ENGINEERS
Section 10 of the Rivers and Harbors Act of March 1899 (33 U. S. C. 401, 403, & 404) - Penalties as provided by Section 12 of the Act (33 U. S. C. 406) are not less than $500 or more than $2,500 or 1 year imprisonment or both.

U. S. ARMY CORPS OF ENGINEERS & ENVIRONMENTAL PROTECTION AGENCY
Section 404 of the Clean Water Act (33 U. S. C. 1251 et seq.) - Criminal penalties are not less than $2,500 per day or more than $25,000 per day or up to 1 year imprisonment or both; after the first violation (conviction) not more than $50,000 per day or up to 2 years imprisonment or both (33 U. S. C. 1319 (c) (1)). Civil penalties may be as much as $25,000 for each day of violation 33 U. S. C. 1319 (d) and 33 U. S. C. 1344 (s) (4).

Injunctive Relief - Court order to remove, restore, or comply with other conditions.

False Statements - Falsifying information in the application may result in a maximum fine of $20,000 or up to 6 months imprisonment or both.

The Environmental Protection Agency also has the authority to assess administrative penalties up to $125,000 for violations of Section 404 of the Clean Water Act.

VIRGINIA MARINE RESOURCES COMMISSION
Title 28.2 of the Code of Virginia
- *Chapter 12 - Submerged Lands*
  - *Article 1 - Ownership & Uses of Submerged Lands*
  - *Article 2 - Enforcement & Penalties*
- *Chapter 13 - Wetlands*
  - *Article 1 - General Provisions*
  - *Article 2 - Wetlands Zoning Ordinances & Wetlands Boards*
  - *Article 3 - Permits & Review*
  - *Article 4 - Enforcement & Penalties*
- *Chapter 14 - Coastal Primary Sand Dunes & Beaches*
  - *Article 1 - General Provisions*
  - *Article 2 - Coastal Primary Sand Dune Ordinance & Boards*
  - *Article 3 - Permits & Review*
  - *Article 4 - Enforcement & Penalties*

For violations under each Chapter civil charges up to $10,000.00 may be assessed by the Commission or a local Wetlands Board, or civil penalties up to $25,000.00, for each day of the violation, may be assessed by an appropriate circuit court.

DEPARTMENT OF ENVIRONMENTAL QUALITY
Chapter 3.1, Section 62.1-44, may assess civil penalties of up to $25,000 per day, willful or negligent violations are punishable by not more than 12 months in jail and a fine of not less than $2,500 or more than $25,000. Persons convicted of a felony under this section is punishable by not less than 1 year, nor more than three years in jail, fines not less than $5,000, nor more than $50,000 for each violation. Should the felony involve imminent danger of death or serious bodily harm, it is punishable by not less than 2 years, nor more than 15 years in prison and a fine of not less than $250,000. A defendant who is not an individual, convicted of this same felony shall be sentenced to pay a fine not exceeding the greater of $1,000,000 or three times the economic benefit that would have been realized by the activity producing the offense.

PRIVACY ACT STATEMENT

The Department of the Army permit program is authorized by Section 10 of the Rivers and Harbors Act of 1899, Section 404 of the Clean Water Act, and Section 103 of the Marine Protection, Research and Sanctuaries Act of 1972. These laws require that individuals obtain permits that authorize structures and work in or affecting navigable waters of the United States, the discharge of dredged or fill material into waters of the United States, and the transportation of dredged material for the purpose of dumping it into ocean waters prior to undertaking the activity. Information provided in the joint permit application will be used in the permit review process and is a matter of public record once the application is filed. Disclosure of the requested information is voluntary; however, it may not be possible to evaluate the permit application or issue a permit if the information requested is not provided.

PROCESSING PROCEDURES

Concurrent processing - When your application is received by VMRC, an application number is assigned. This number will be used when referring to your project. Copies of the application will be forwarded to the regulatory agencies by VMRC. Because of differences in jurisdiction and laws, these agencies will perform separate but concurrent reviews of your project.

Site Inspections - Site inspections are necessary to evaluate proposals before, during, and after a permit is issued. Photographs of the project sight will be taken during the on-site evaluations. Failure to allow an authorized representative to enter or to take photographs of conditions at the project site may result in permit denial.

Joint State/Federal Public Notice - A Joint Public Notice may be used to advertise project plans. Comments received in response to the Public Notice are considered by each agency in reaching their individual decisions on the project. Certain types of projects may qualify for Corps general permits. In such cases, a joint public notice will not be prepared. The affected state and local agencies will then follow their individual regulations for advertising the project which may require publication in a local newspaper.

Commenting on Notices - Adjacent property owners and others who have expressed interest in a particular area are furnished a copy of the joint public notice. In addition, local and state agencies may place a public notice in the local newspaper. Anyone may comment on a public notice. Comments must be made in writing and received by the close of the comment period specified in the public notice.

Public Hearings - At the close of the Public Notice comment period Public Hearings may be held by Local, State, or Federal agencies. All applications requiring a local wetlands permit are considered at a public hearing held by the local wetlands board.

Purpose of Federal Hearings - The purpose of a Federal public hearing is to acquire information that is pertinent to the decision making process and cannot be obtained through other means.

Federal Hearing Procedures - Most projects usually affect only the applicant and the surrounding neighborhood. Very few projects require a public hearing. When a hearing is necessary, a 30 day public notice is sent out announcing the date, time and place of the hearing. A decision on the project will not be made at the hearing. A 10 day comment period follows the hearing to allow for additional facts or information to be submitted before the District Engineer makes a final decision.

State/Local Hearing Procedures - Projects affecting tidal wetlands will be heard by the appropriate Local Wetlands Board after a notice of Public Hearing has been advertised at least once a week for two consecutive weeks in a local newspaper. You should consult your local wetlands board to determine who bears the cost for this advertisement. VMRC will conduct the hearings for localities with no wetlands board.

Commission Meetings - Protested applications for a Virginia Marine Resources Commission permit which cannot be resolved, projects costing over $50,000 involving encroachment upon or over State-owned subaqueous land, and all projects affecting State and local wetlands in localities without a wetlands board will be scheduled for Public Hearings by VMRC at their regularly scheduled monthly commission meetings. All interested parties will be officially notified regarding the date and time of the hearing, as well as informed of Commission meeting procedures. The Commission will make a decision on the project at the meeting unless a decision for continuance is made.

Joint Processing Meetings - Pending applications that do not meet the criteria of the Corps general permits are discussed at a joint processing meeting attended by representatives from the regulatory/advisory agencies. Project impacts as well as possible alternatives are discussed. These meetings are designed to reduce processing time by eliminating duplication of agency efforts.

Virginia Water Protection Permits - All applications and permits will be processed in accordance with the Virginia Water Protection Permit Regulations (VA 680-15-02) and with Procedural Rule No. 1.

Finalization of Process - If the project is approved, a permit is sent to the applicant. In some cases a notarized signature as well as processing fees and royalties are required before the permit is validated. If the project is denied, the reason(s) for denial will be provided in writing.

If you have questions about completing the application or drawings or on the permitting process, call any of the agencies listed on pages 51-54 of this guide.

MOST FREQUENTLY ASKED QUESTIONS

What is the U. S. Corps of Engineers and what do they do, and why? The Corps of Engineers is a branch of the U. S. Army. You may not realize that the Corps' responsibilities go far beyond bridge and dam building. Specifically, the Corps' Regulatory Branch is responsible for regulating construction, dredging, and filling activities in waters of the United States including tidal and nontidal wetlands. Congress charged the Corps with administering Section 10 of the Rivers and Harbors Act of 1899 which prohibits obstructing or altering navigable waters of the U. S. without a permit. In 1977, the Corps was also charged with administering Section 404 of the Clean Water Act which prohibits the unauthorized discharge of dredged or fill material into waters, including tidal and nontidal wetlands of the United States.

What are nationwide and regional permits? A nationwide permit is a form of general permit which authorizes certain activities throughout the nation in many cases without the property owner needing to notify the Corps provided certain conditions are met. However, an application may still be required for State review. A regional permit is a general permit issued by division or district engineers on a regional basis. The Norfolk District has issued regional permits for some 20 different activities.

How do I know if I need a permit? Any activity (structure, dredging, certain land clearing, filling, etc.) which obstructs, alters, or discharges fill into waters of the United States including tidal and nontidal wetlands may require a permit from the Corps, the Virginia Marine Resources Commission, the Virginia Department of Environmental Quality and or the local wetlands board. You may call the appropriate agency listed at the front of the joint application booklet for further guidance.

Will someone visit the site of my proposed project and tell me what is the best course of action? If you believe a site visit would assist you in developing your project plans, you may call the Corps.

What is the permit process? The permitting process begins with you. You complete a Joint Permit Application and send it to the Virginia Marine Resources Commission (VMRC). VMRC assigns an application number and sends copies of your application to DEQ, your local wetlands board and to the Corps. Projects not satisfying the requirements of a nationwide or regional permit may need to be advertised by public notice. The Corps is required to coordinate such applications with the Environmental Protection Agency, the U. S. Fish and Wildlife Service, and the National Marine Fisheries Service. The Corps considers the view of these agencies as well as comments received from the public in their evaluation of the project.

What are the penalties if I do not follow the permit process? The agencies are responsible for enforcing the regulations they administer. Reported or detected violations will be investigated. Should a violation be confirmed, appropriate action will be pursued. (See page 57 for specific Federal and State penalties.)

Where can I get further information about wetlands, wildlife, and the regulatory process? There are many sources. For information regarding wetlands, wildlife and the regulatory process you may contact any of the regulatory and advisory agencies listed on pages 51-54 of this booklet. The following agencies may also provide valuable information about aquatic resources, wetlands, wildlife and thier habitats:

Chesapeake Bay Local Assistance Department	1-800-243-7229 (1-800-CHESBAY)
Environmental Protection Agency Wetlands Hotline	1-800-832-7828

As a reminder, your local wetlands board (mostly in tidal areas) or your local Soil & Water Conservation District my also provide assistance and advice on development in or affecting wetlands.

Does VMRC have jurisdiction in areas other than Tidewater? Yes, in State-owned submerged lands in nontidal areas. This includes all the beds of the bays, rivers and creeks not conveyed by special grant or compact according to law. All perennial streams may be under VMRC jurisdiction.

DEFINITIONS, SPECIAL TERMS, & ABBREVIATIONS

Acre - Foot Unit of volume of water that would cover one acre to a depth of one foot; equal to 43,560 cf.
Adjacent Property Owner - Individuals owning property that shares the boundary (common property line) of the property at the project site.
Anadromous fish - Fish that swim upstream to spawn.
Beach Nourishment - The placement of suitable sand on a shore to restore and stabilize an eroding beach.
Benchmark - A fixed point of reference used in a measure that under normal circumstances will not move or be changed. For example: the distance from the corner of a house to a telephone pole, or an official government survey marker.
Breakwater - A fixed or floating structure usually constructed parallel to the shoreline to protect the shoreline from erosion by reducing the wave energy that reaches the shore.
Bulkhead - an upright structure built to protect an eroding shoreline from the force of water.
Community Facility for Boat Moorings - A facility operating under public or private ownership which provides mooring for boats whether on a free, rental, or fee basis or for the convenience of a particular group of individuals.
Complete Application -The basic application, all applicable appendices, and drawings properly filled out and completed.
CFS -Cubic feet per second.
Cubic Yard - A measure of volume; length x width x depth = volume (27 cubic feet = 1 cubic yard).
Dredged Material - Material that is excavated or dredged from waters of the United States.
Estuarine - River systems that extend upstream to an imaginary line that closes the mouth of the river, bay or sound. Generally, the term estuary refers to the portion of the river from the ocean to the point where the ocean salts are diluted by freshwater from either river currents or upland runoff.
FPS - Feet per second.
Fill Material -Any material that will change the bottom elevation of an aquatic area, wetland, or water body.
Finger Pier - A small walkway generally built perpendicular to a pier for the purpose of providing access to and aid in mooring a boat. (Often referred to as a catwalk, L-head or T-head).
Filter Cloth - A thin cloth-like material normally used behind bulkheads or riprap to retain fill material while allowing water to pass through it.
General Permit -A Department of the Army (Corps) permit that is issued on a nationwide or regional basis for a category or categories of activities when the work is similar in nature and causes only minimal individual and cumulative environmental impacts.
Groin - A structure built perpendicular to the shore whose main function is to trap and retain moving sediments.
Intermittent Stream - A stream that has flowing water at some times and is dry at other times.
Intertidal Zone - The area of land that is submerged at high tide and exposed at low tide.
Jetty - A structure, much like a groin, that is built alongside a channel or harbor entrance to prevent sand from building up in the channel and obstructing navigation. Jetties are seldom low profile since their main purpose is to maintain a channel opening.
Joint Public Notice - A public notice that satisfies the advertising requirements of the Virginia State Water Control Board, the Virginia Marine Resources Commission, the Tennessee Valley Authority, and the Corps of Engineers.
Linear Feet - The total footage of a structure measuring in a continuous line along the structure.
Low Profile Groin - A groin design where the height of the structure is gradually lowered so the channelward end is below mean low water which allows sand to bypass the structure (once the structure is filled) so that beaches downdrift of the groin will still receive sand.
Marina - Any installation operating under public or private ownership which provides mooring (not including paddle or rowboats), sale, rental, equipment, supply, or service for the convenience of the public or their leases, renters, or users of their facilities.
Marsh Peat Surface - The surface of the area containing the roots of the wetland vegetation. Also referred to as the wetland substrate.
Mean High Water (MHW) - The average elevation of high water in tidal areas.
Mean High Water Line - A contour line on a drawing that shows the landward limits of an average high tide.
Mean Low Water (MLW) - The average elevation of low water in tidal areas.
Mean Low Water Line - A contour line on a drawing that shows the channelward limits of an average low tide.

MGD - Million gallons per day.
Mudflats - Nearly level areas without vegetation that are covered during high water and exposed at low water.
Nationwide Permit - Nationwide permits are a type of general permit that authorize certain specified activities nationwide. If certain conditions are met, the specified activity may be undertaken without the need for an individual or regional permit.
Navigable Waters of the United States - Waters of the United States that are subject to the ebb and flow of the tide, and/or are presently used, or have been used in the past, or may be susceptible to use for the transport of interstate or foreign commerce.
Nontidal Waters -Waterways or impoundments not subject to the periodic rise and fall of the tide.
Non-Vegetated Wetlands - State and Local Definition: The Commonwealth of Virginia has defined these areas as follows: Non-vegetated wetlands include the land lying between and contiguous to mean low water to an elevation of mean high water not otherwise considered "vegetated wetlands". Generally, this is any area between mean low water and mean high water which does not exhibit or support vegetation. These areas include mudflats, sand beaches, eroding shorelines, etc.
Ordinary High Water (OHW) - The average elevation of high water in nontidal areas.
Ordinary High Water Line - A contour line on maps of nontidal waterfront property that shows the landward limits of normal high water.
Perennial Stream - A stream that has flowing water year round and is usually indicated by a solid blue line on U.S.G.S. quadrangle maps.
Pre-Discharge Notification (PDN) - Notification required by the Corps of Engineers on specific projects that may meet the criteria of certain Nationwide Permits.
Put & Take Trout Waters - Cool, clear, freshwater streams that are stocked with various species of trout.
Regional Permit - Regional permits are a type of General Permit that may be issued by a division or district engineer for activities within a specific geographic area.
Retaining wall - An upright structure built to prevent property from slumping into a waterway.
Revetment - A facing, usually made of stone or concrete, installed to protect an eroding shoreline from the force of water.
Riparian Rights - The rights of a person owning land bordering on a water body to reach navigable water.
Riprap - A layer of material such as stone or chunks of concrete on an embankment slope to prevent erosion.
Splash Apron - A structure that is usually made of riprap or concrete and placed at the outlet of a pipe to absorb the initial impact of the flow and reduce the flow velocity to a level which will not erode the receiving channel or area.
Spur - A short structure, normally less than 20 feet in length, built perpendicular to a groin for the purpose of reducing erosion or scour downdrift of the groin.
Square Feet - A measurement of area (length x width = area),
State Waters - All water, on the surface and under the ground, wholly or partially within its jurisdiction.
Subaqueous Land - Land which is submerged below mean low water (channelward of the mean low water line) in tidal areas or below ordinary high water (channelward of the ordinary high water line) in nontidal areas.
Tidal Waters - Waters subject to a periodic rise and fall in elevation caused by the moon and sun and occurring in a cyclic manner, normally every 12 hours.
Trout waters - Cool, clear, freshwater streams that provide habitat for various species of trout. Trout cannot survive in waters warmer than 68 degrees.
Vegetated Shallows - Shallow water areas that support submerged aquatic vegetation.
Vegetated Wetlands - State and Local Definition: The Commonwealth of Virginia has defined these areas as follows: Vegetated wetlands include the land lying between and contiguous to mean low water to an elevation above mean low water equal to one and one-half times the mean tide range at the site of the proposed project and upon which one or more species of tidal wetland plants is growing. Generally, this is the land between and adjacent to the range of mean high water and mean low water which supports at least one species of wetland vegetation. This definition includes the land within one and one-half times the range of the average tide at the site. State and Local wetlands are limited to tidal areas of the commonwealth.
Federal Definition - The Government of the United States has defined wetlands as follows: Those areas that are inundated or saturated by surface or groundwater at a frequency and duration sufficient to support, and under normal circumstances do support, a prevalence of vegetation typically adapted for life in saturated soil conditions. Federal wetlands generally include swamps, marshes, bogs, and similar areas. It should be noted in many cases the federal definition of wetlands includes areas at higher elevation than one and one-half times the mean high tide range. Federal wetlands are not limited to tidal areas.

Vernal Pools - Pools that may only seasonally have standing water. Several endangered species are dependant on vernal pools for their reproduction and continued existence.
Waters of the United States - Coastal (including territorial seas) and inland waters, lakes, rivers, and streams that are navigable waters of the United States, including adjacent wetlands. PLUS: Tributaries to navigable waters of the United States, including adjacent wetlands. (Man-made, nontidal drainage and irrigation ditches excavated from dry land, not from wetlands, are not considered to be tributaries.) PLUS: Interstate waters and their tributaries, including adjacent wetlands.

U.S. Army Corps
Of Engineers
Norfolk District

CERTIFICATE OF COMPLIANCE
WITH
ARMY CORPS OF ENGINEERS, NORFOLK DISTRICT
REGIONAL PERMIT RP-17 FOR PRIVATE PIERS

I, _____, hereby certify that I have read and understand all conditions of the effective Regional Permit RP-17, issued by the Army Corps of Engineers, Norfolk District, Norfolk, Virginia, regulating the construction, maintenance, and repair of **private, non-commercial piers & mooring piles** in certain navigable waters of the United States within the Commonwealth of Virginia. The proposed (work) to be located at:

---

fully complies with all conditions set forth in RP-17.

I agree to make available a copy of this certification and any other documents required by RP-17 to any regulatory representative authorized to visit the project site to ensure permit compliance. If I fail to provide the required documentation upon request, I understand that the representative will have the option of stopping work at the project site until it has been determined that I am in full compliance with all terms and conditions set forth in the regional permit.

Signature of Property Owner or Agent

Date

NOTE: DO NOT SIGN THIS FORM IF YOU ARE CONSTRUCTING A BULKHEAD, RIPRAP REVETMENT, OR PERFORMING ANY OTHER ACTIVITY NOT COVERED BY RP-17. <u>DO NOT SIGN THIS FORM IF YOU HAVE NOT READ THE TERMS AND CONDITIONS OF RP-17</u>. YOU MAY CONTACT THE CORPS AT (804) 441-7652 FOR A COPY OF THE PERMIT.

NAO FL 17 Rev 30 APR 93

ADDENDUM

DEPARTMENT OF ENVIRONMENTAL QUALITY ADDITIONAL INFORMATION FOR VIRGINIA WATER PROTECTION PERMITS

The following information is required for all applications unless otherwise noted:

1. § 62.1-44.15:3 of State Water Control Law requires that before the Department may consider any application for a permit to be complete, that the applicant provide the Executive Director with a notification from the local governing body of the county, city or town in which the discharge is to take place that the location and operation of the facility is fully consistent with all ordinances adopted pursuant to Chapter 11 (§ 15.1-427 et seq.) of Title 15.1. A form for local government signature is included with this appendix. Please note that the local governing body must be presented with the Joint Permit Application. Failure to fulfill this requirement will prevent processing of your application and may result in the administrative denial of your request.

2.
Latitude: ___-___-___
Longitude: ___-___-___

3.
Hydrologic
Unit Code (HUC) : _____

* This information is found on the Hydrologic Unit Map - State of Virginia published by the U.S. Geological survey.

4. Stream Classification (Check one) :

____ Class I - Open Ocean
____ Class II - Estuarine Waters
____ Class III - Nontidal Waters
____ Class IV - Mountainous Zone Waters
____ Class V - Put & Take Trout Waters
____ Class VI - Natural Trout Waters
____ Class VII - Swamp Waters

5. Stream Drainage Area (check whichever applies) **

a. ___<1 square mile b. ___<5 square miles c. ___>5 square miles

**Note: Applicants proposing impoundments and water withdrawals may be required to provide more detailed hydrologic information (see section 11)

6. Existing beneficial uses of affected waters (check all that apply)***:

____ fish and wildlife habitat
____ recreation
____ public water supply
____ agriculture water supply
____ commercial/industrial supply
____ waste assimilation
____ navigation
____ cultural value
____ aesthetic value
____ other (please describe)

7. Uses which may be impacted by the proposed project (check only those uses impacted) ***:

____ fish and wildlife habitat
____ recreation
____ public water supply
____ agriculture water supply
____ commercial/industrial supply
____ waste assimilation
____ navigation
____ cultural value
____ aesthetic value
____ other (please describe)

***Note: More detailed information on beneficial uses may be required for specific projects. Applicants will be notified, in writing, of any additional requirements.

8. Functional values assessment (wetlands only):

Functional assessments are required for impacts (permanent and temporary) to all wetlands one acre or more in size. Many recognized functional assessment methodologies exist. However, the DEQ endorses no specific methodology at this time. It is suggested that an applicant or his agent select a method based upon its ease of use, ability to provide quality information, and utility in the field. Applicants are cautioned that the assessment of wetland functional value is technically complex. Persons unfamiliar with the techniques for functional assessment should use caution when attempting to utilize these methods. The functional assessment and the methodology utilized to determine functional value must be submitted to the DEQ with the application package.

9. Wetland delineation (where applicable) :

All projects impacting wetlands must provide a delineation map showing the physical location and aerial extent of all wetlands on the site. All data sheets and calculations utilized to determine an area's wetland status shall be submitted with the delineation map. The currently accepted federal methodology shall be used in preparing wetland delineations.

10. Mitigation Plan (required for unavoidable wetland losses and stream modifications):

The mitigation plan shall at a minimum include:

a. Measures taken to avoid impacts to surface waters, including wetlands.

Example 1 : Structures were relocated to avoid wetland/stream relocation area's identified at *X* and *Y* on the delineation map.

Example 2: The road crossing structure has been changed from a quadruple box culvert to a bridge in order to avoid fill and channel modifications in Jones Branch, a sensitive trout stream.

b. Where impacts could not be avoided, measures taken to reduce impacts to surface waters, including wetlands.

Example 1: The slope of the road fill was reduced to x resulting in a reduction of y in wetland area impacted.

Example 2: The bridge was realigned to reduce the amount of channelization necessary to accommodate the road crossing.

c. Where impacts could not be avoided or minimized, a mitigation plan which completely describes the type of impact to be mitigated and the means by which mitigation will be accomplished. Plans should include:

* Location of the mitigation site, including latitude and longitude at the center of the site.
* detailed sketches and site plans
* any other measures designed to re-create, enhance or restore impacted beneficial uses within the proposed mitigation area.

If no replacement mitigation is planned, the applicant must include a brief statement to this effect and include a detailed explanation as to the reason no replacement mitigation is planned.

**** Note: Applicants with projects involving a water withdrawal or a FERC hydropower licensing or relicensing are required to provide the information in items 11 through 19.

11. Applicants must complete Appendix N - Stream Intakes and Outfall Structures, Appendix O - Stream Channel Modifications and/or Appendix P - Impoundments/Dams, whichever is (are) appropriate.

12. What are the median monthly stream flows in cubic feet per second (cfs) at the water intake or dam site?

Month	Median Flow (CFS)	Month	Median Flow (CFS)
JAN	_____	JUL	_____
FEB	_____	AUG	_____
MAR	_____	SEP	_____
APR	_____	OCT	_____
MAY	_____	NOV	_____
JUN	_____	DEC	_____

13. Describe below or on an attachment the streamflow gauges, the type of calculations used and the period of record that was used to calculate the median monthly flows in item 12, and the average flows provided in Appendices N, O and P.

_____
_____
_____
_____

14. What is the maximum instantaneous withdrawal and maximum daily withdrawal at the water intake or dam site? Specify the units of measurement, e.g. million gallons per day, gallons per minute, cubic feet per second, etc.

Maximum instantaneous withdrawal _____

Maximum daily withdrawal _____

15. Describe the manner in which the withdrawal of water varies over time, for example, as a function of the time of year, or time of day, or time of week.

_____
_____
_____

16. Describe below the amount of water that will be lost to consumptive use. For the purpose of this application, consumptive use means the withdrawal of surface waters without recycle of said waters to their source or basin of origin. Attach a map showing the location of the withdrawal and location of the return flow.

_____
_____
_____
_____

17. Describe below or in a separate attachment how the amount of water to be withdrawn was calculated and any relevant assumptions made in that calculation. Also describe the proposed use of the water withdrawal.

---

18. Describe in an attachment the existing beneficial uses of the surface water body near the proposed project site that would be affected by the withdrawal of water. Include both instream and offstream uses. For the purposes of this application beneficial instream uses include, but are not limited to, the protection of fish and wildlife habitat, maintenance of waste assimilation, recreation, navigation and cultural and aesthetic values. Offstream beneficial uses include, but are not limited to, domestic (including public water supply), agricultural, hydropower, commercial and industrial uses. Describe the streamflow necessary to protect existing beneficial uses and how the proposed withdrawal will impact existing beneficial uses.

19. Describe in an attachment the aquatic life known to be present at the proposed location that will be impacted by the proposed withdrawal. Include information on the species known to be present and their habitat requirements.

TO: Applicants For Virginia Pollutant Discharge Elimination System (VPDES) Permits, Virginia Pollution Abatement (VPA) Permits, Virginia Corrective Action Plan (CAP) Permits and Virginia Water Protection Permits.

Article 2, § 62.1-44.15:3 of the State Water Control Law states:

"No application for a Certificate to discharge sewage, industrial wastes and other wastes into or adjacent to state waters shall be considered complete unless the applicant has provided the Executive Director with notification from the governing body of the county, city or town in which the discharge is to take place that the location and operation of the discharging facility is consistent with all ordinances adopted pursuant to Chapter 11 (§ 15.1-427 et seq.) of Title 15.1 of the Code."
(These are local zoning and planning ordinances)

In accordance with this section, new applications for VPA permits, VPDES Permits, CAP Permits and Virginia Water Protection Permits will not be considered complete until the information below is submitted to the DEQ Regional Office or Headquarters Office in the case of the Virginia Water Protection Permits.

To: _____
(County, City or Town Administrator/Manager)

I am in the process of completing a DEQ application form for a permit or certificate. In accordance with Chapter 11 (§15.1-427 et seq.) of Title 15.1 of the Code of Virginia, I request that you sign one of the two statements below certifying my attached application is consistent with your local ordinances. Please return this form to:

Return to: _____
(Applicant's Name)
_____
(Applicant's Address)
_____

I hereby certify,

_____ (1) that the proposed location and operation of the facility is consistent with all ordinances adopted pursuant to Chapter 11 (§15.1-427 et seq.) of Title 15.1 of the Code of Virginia or

____ (2) That no local ordinances are in effect pursuant to Chapter 11 (§15.1-427 et seq.)

_____	_____
Signature	Title
_____	_____
Print name	Date

How to calculate square feet, cubic feet and cubic yards:

If you wanted to dredge a channel 100 feet long, 20 feet wide and 5 feet deeper than the existing channel is at mean low water, the volume you dredge would look similar to the illustration below.

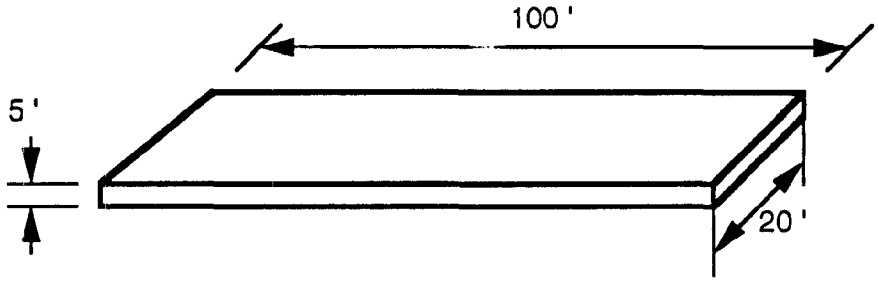

Using steps 1 - 3 below, the calculations for this example are:

1. 100 feet x 20 feet = 2,000 square feet
2. 5 feet x 2,000 feet = 10,000 cubic feet
3. 10,000 cubic feet / 27 = 370 cubic yards

EXHIBIT C

Permit # _____

Commonwealth of Virginia
Marine Resources Commission
Authorization

A Permit has been issued to: _____

(Name)

_____

(Address)

_____

The Permit Authorizes : _____

_____

_____

_____.

Issuance Date _____, **Expiration Date** _____.

_____

(Commissioner or Designee)

_____

(Notary Public)

_____

(Commission Expires)

This Notice Must Be Conspicuously Displayed At Site Of Work.

EXHIBIT D

Virginia Marine Resources Commission
Habitat Management Division
2600 Washington Avenue
Post Office Box 756
Newport News VA 23607-0756

Attention: _____
Environmental Engineer

Sir/Madam:

Please be advised that I will commence work on _____ *on*
(Permit Number)

_____ *in* _____.
(Date) *(Waterway)* *(City/County)*

I expect the work to be completed no later than _____.
(Date)

_____
(Name of Permittee)

*** Note: Return postage is on the card.*

EXHIBIT E

WILLIAM A. PRUITT
Commissioner
ROBERT D. CRAFT
Chief, Administration and Finance
ROBERT W. GRABB
Chief, Habitat Management
ROBERT J. MARKLAND
Chief, Law Enforcement
JACK G. TRAVELSTEAD
Chief, Fisheries Management

COMMONWEALTH of VIRGINIA

Marine Resources Commission

P. O. Box 756
2600 Washington Avenue
Newport News, Virginia 23607-0756

ASSOCIATE MEMBERS
SIDNEY H. CAMDEN
Eastville, Virginia
GEORGE S. FORREST
Poquoson, Virginia
JOHN W. FREEMAN, SR.
Hampton, Virginia
TIMOTHY G. HAYES
Richmond, Virginia
WILLIAM A. HUDNALL
Heathsville, Virginia
DONALD L. LIVERMAN, SR.
Virginia Beach, Virginia
PETER W. ROWE
Chesapeake, Virginia
JANE C. WEBB
Newport News, Virginia

October 15, 1993

Mr. Mark A. Bruner
c/o Tidewater Dock, Inc.
P. O. Box 2733
Virginia Beach, Va. 23450

RE: VMRC #93-1056

Dear Sir:

Enclosed is the Marine Resources Commission permit to install 233 linear feet of riprap revetment no more than three feet channelward of mean low water at property situated along Linkhorn Bay in Virginia Beach.

A yellow placard is also enclosed. This placard reflects the authorized activities for inspection purposes and must be conspicuously displayed at the work site throughout the construction phase. Failure to properly post the placard in a prominent location will be considered a violation of your permit conditions.

The work authorized by this permit is to be completed by October 31, 1996. Please note that in conformance with Special Condition 17 of your permit you are to notify the Commission prior to commencement of your permitted project. The enclosed self-addressed, stamped post card is to be used for this purpose. All other conditions of the permit will remain in effect.

Please be advised that you may also require issuance of a U. S. Army Corps of Engineers permit before you begin work on this project. You may wish to contact them directly to verify any permitting requirements.

Sincerely,

Robert W. Grabb
Chief, Habitat Management

RWG/lm
HM
Enclosure
CC: U. S. Army Corps of Engineers, Norfolk District
Virginia Beach Wetlands Board
Applicant

MRC 30 - 317

VMRC# 93-1056

Applicant: Mark A. Bruner

COMMONWEALTH OF VIRGINIA
MARINE RESOURCES COMMISSION
PERMIT

The Commonwealth of Virginia; Marine Resources Commission, hereinafter referred to as the Commission, on this 5th day of October 1993, hereby grants unto:

Mark A. Bruner
1537 Quail Point Road
Virginia Beach, VA 23454

hereinafter referred to as the Permittee, permission to:

[X] Encroach in, on, or over State-owned subaqueous bottoms pursuant to Chapter 12, Subtitle III, of Title 28.2 of the Code of Virginia.

[ ] Use or develop tidal wetlands pursuant to Chapter 13, Subtitle III, of Title 28.2 of the Code of Virginia.

Permittee is hereby authorized to: install 233 linear feet of riprap revetment no more than three feet channelward of mean low water at property situated along Linkhorn Bay in Virginia Beach.

All activities authorized herein shall be accomplished in conformance with plans and drawings dated September 23, 1993, which are attached and made a part of this permit.

This permit is granted subject to the following conditions:

(1) The work authorized by this permit shall be completed by October 31, 1996. The Permittee shall notify the Commission when the project is completed. The completion date may be extended by the Commission in its discretion. Any such application for extension of time shall be in writing prior to the above completion date and shall specify the reason for such extension and the expected date of completion of construction. All other conditions remain in effect until revoked by the Commission or the General Assembly.

(2) This permit grants no authority to the Permittee to encroach upon the property rights, including riparian rights of others.

(3) The duly authorized agents of the Commission shall have the right to enter upon the premises at reasonable times, for the purpose of inspecting the work being done pursuant to this permit.

(4) The Permittee shall comply with the water quality standards as established by the Virginia Water Control Board and all other applicable laws, ordinances, rules and regulations affecting the conduct of the project. The granting of this permit shall not relieve the Permittee of the responsibility of obtaining any and all other permits or authority for the projects.

(5) This permit shall not be transferred without written consent of the Commissioner.

(6) This permit shall not affect or interfere with the right vouchsafed to the people of Virginia concerning fishing, fowling and the catching of and taking of oysters and other shellfish in and from the bottom of acres and waters not included within the terms of this permit.

(7) The Permittee shall, to the greatest extent practicable, minimize the adverse effects of the project upon adjacent properties and wetlands and upon the natural resources of the Commonwealth.

(8) This permit may be revoked at any time by the Commission upon the failure of the Permittee to comply with any of the terms and conditions hereof or at the will of the General Assembly of Virginia.

(9) There is expressly excluded from the permit any portion of the waters within the boundaries of the Baylor Survey.

(10) This permit is subject to any lease of oyster planting ground in effect on the date of this permit. Nothing in this permit shall be construed as allowing the Permittee to encroach on any lease without the consent of the leaseholder. The Permittee shall be liable for any damages to such lease.

(11) The issuance of this permit does not confer upon the Permittee any interest or title to the beds of the waters.

(12) All structures authorized by this permit which are not maintained in good repair shall be completely removed from State-owned bottom within three (3) months after notification by the Commission.

(13) The Permittee agrees to comply with all of the terms and conditions as set forth in this permit and that the project will be accomplished within the boundaries as outlined in the plans attached hereto. Any encroachment beyond the limits of this permit shall constitute a Class 1 misdemeanor.

(14) This permit authorizes no claim to archaeological artifacts which may be encountered during the course of construction. If, however, archaeological remains are encountered, the Permittee agrees to notify the Commission, who will, in turn notify the Department of Historic Resources. The Permittee further agrees to cooperate with agencies of the Commonwealth in the recovery of archaeological remains if deemed necessary.

(15) The Permittee agrees to indemnify and save harmless the Commonwealth of Virginia from any liability arising from the establishment, operation or maintenance of said project.

VMRC # 93-1056

: following special conditions are imposed on this permit:

16. The yellow placard accompanying this permit document must be conspicuously displayed at the work site throughout the construction phase of the authorized activity.

17. Permittee agrees to notify the Commission a minimum of 15 days prior to the start of construction of the activities authorized by this permit.

PERMITTEE—WHITE COPY
COMMISSION—YELLOW COPY
CORPS OF ENGINEERS—PINK COPY

VMRC # 93-1056

A permit issuing fee of $25.00

and a royalty of n/a

for the installation of 233 linear feet of riprap revetment

for a total of $25.00 is due and payable upon return of this document signed by the Permittee. This permit consists of 12 sheets.

PERMITTEE

Permittee's signature is affixed hereto as evidence of acceptance of all of the terms and conditions herein.

In cases where the Permittee is a corporation, agency or political jurisdiction, please assure that the individual who signs for the Permittee has proper authorization to bind the organization to the financial and performance obligations which result from activity authorized by this permit.

PERMITTEE

Accepted for Mark A. Bruner

11th day of October, 1993 By Mark A Bruner
(Name) (Title)

State of Virginia

City (~~or County~~) of Chesapeake, to-wit:

I, Joanne S. Rooks a Notary Public in and for said City (or County) and State hereby certify that Mark A. Bruner, Permittee, whose name is signed to the foregoing, has acknowledged the same before me in my City (or County) and State aforesaid.

Given under my hand this 11th day of October, 19 93

Notary Public Joanne S. Rooks

My commission expires on the 31st day of July, 19 94.

COMMISSION

IN WITNESS WHEREOF, the Commonwealth of Virginia, Marine Resources Commission has caused these presents to be executed in its behalf by

Robert W. Grabb Chief, Habitat Management
(Name) (Title)

MARINE RESOURCES COMMISSION

5th day of October 19 93 By [signature]

State of Virginia

City of Newport News, to-wit:

I, Linda L. Musser a Notary public within and for said City, State of Virginia, hereby certify that Robert W. Grabb whose name is signed to the foregoing, bearing the 5th day of October 19 93, has acknowledged the same before me in my City aforesaid.

Given under my hand this 15th day of October, 19 93

Notary Public Linda L Musser

My commission expires on the 31st day of March, 19 96

PERMITTEE—WHITE COPY
COMMISSION—YELLOW COPY
CORPS OF ENGINEERS—PINK COPY

JOB SITE
MARK A. BRUNER
1537 QUAIL POINT RD.
VIRGINIA BEACH, VA
23454

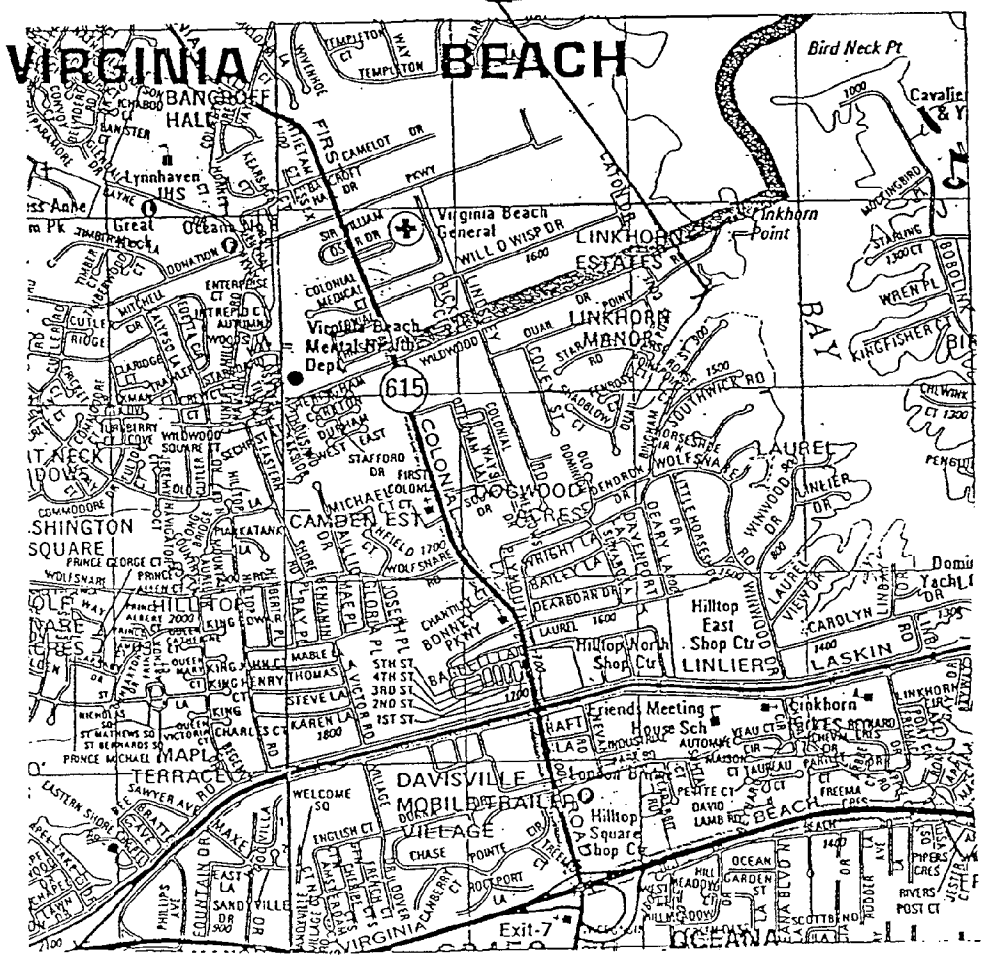

REVISED DRAWINGS
PROJECT 93-1056-10
WMRC REC'D 9-29-93

SCALE:
1" = 2,000'

ADC'S STREET MAP OF
TIDEWATER
VIRGINIA
MAP 14
GRID BLOCK C-7

PROPOSED SHORELINE
PROTECTION

PURPOSE: EROSION CONTROL
DATUM: M.L.W. 0.00
ADJACENT PROPERTY OWNERS:
1) GRAY N. TURNER
2) DAVID H. ADAMS

IN: LINKHORN BAY
AT: 1537 QUAIL POINT ROAD
CITY: VIRGINIA BEACH
STATE: VIRGINIA
APPLICATION BY:
MARK A. BRUNER
SHEET 1 OF 9 DATE: 7/23/93
REVISED: 8/18/93

REVISED 8-27-93

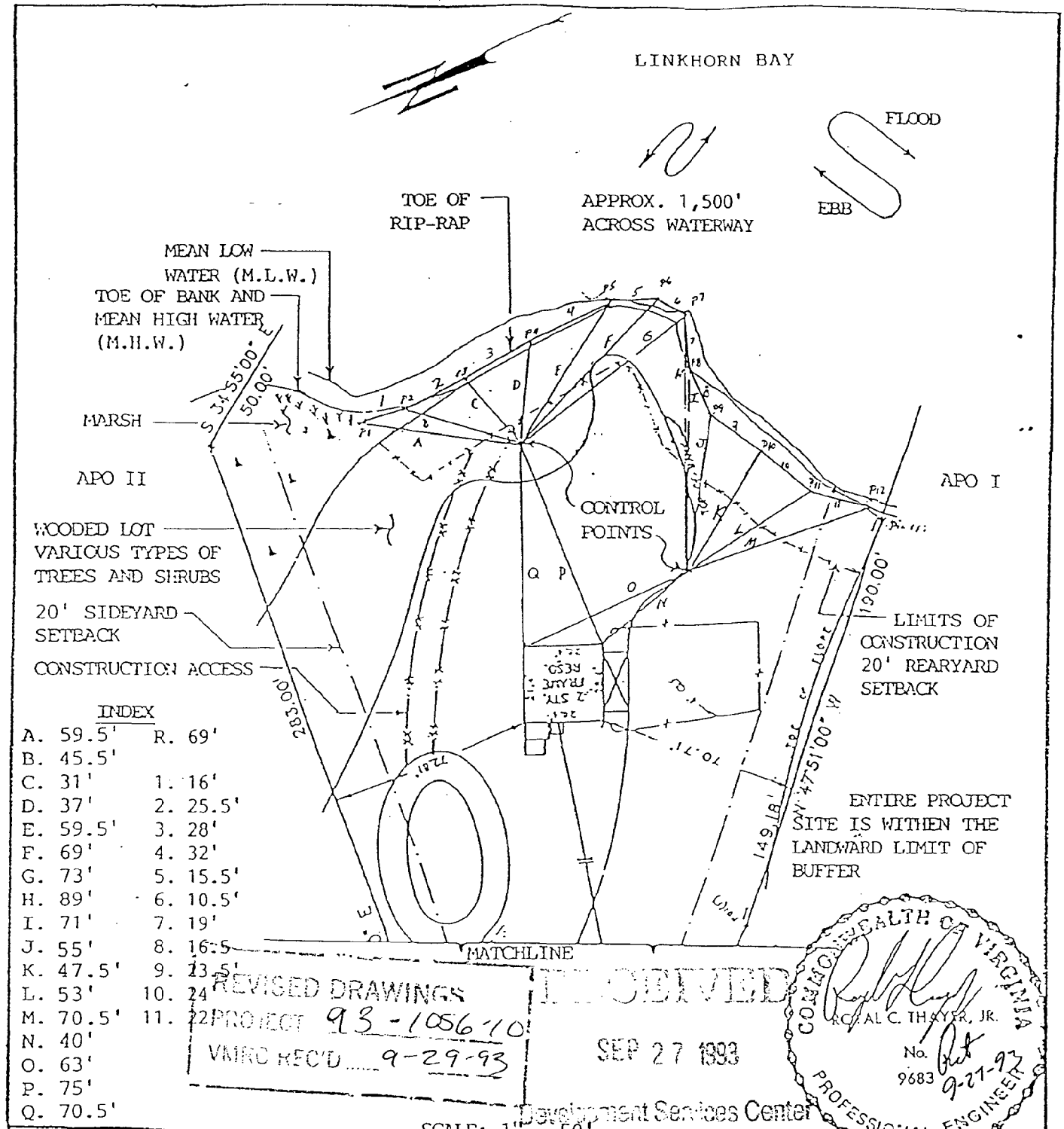

PURPOSE: EROSION CONTROL
DATUM: M.L.W. 0.00
ADJACENT PROPERTY OWNERS:
1) GRAY N. TURNER
2) DAVID H. ADAMS

SCALE: 1" = 50'
PLAN VIEW

PROPOSED SHORELINE PROTECTION

IN: LINKHORN BAY
AT: 1537 QUAIL POINT ROAD
CITY: VIRGINIA BEACH
STATE: VIRGINIA
APPLICATION BY:
MARK A. BRUNER
SHEET 2 OF 9 DATE: 7/23/93

REVISED 8-27-93
9-23-93

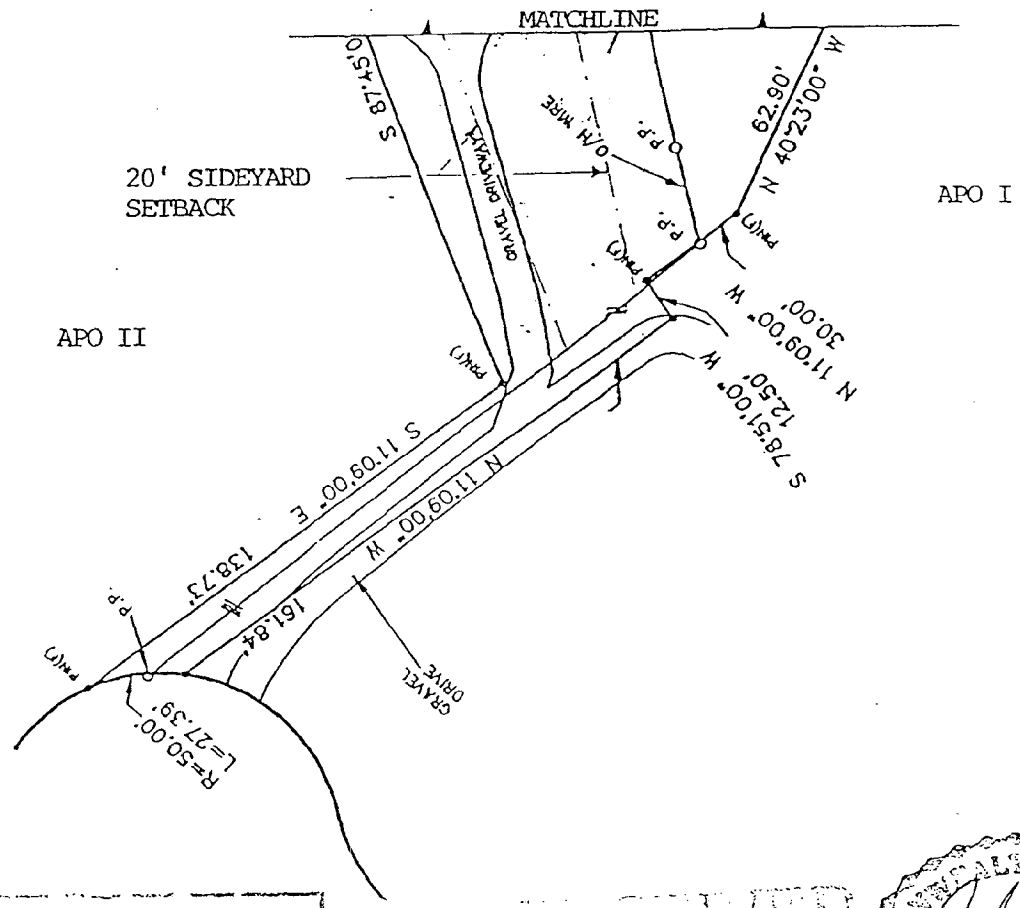

REVISED DRAWINGS
PROJECT 93-1056 10
VMRC REC'D 9-29-93

RECEIVED
SEP 27 1993
Development Services Center

COMMONWEALTH OF VIRGINIA
RONAL C. TRAYER, JR.
No. 9683
9-27-93
PROFESSIONAL ENGINEER

SCALE: 1" = 50'
PLAN VIEW

PURPOSE: EROSION CONTROL
DATUM: M.L.W. 0.00
ADJACENT PROPERTY OWNERS:
1) GRAY N. TURNER
2) DAVID H. ADAMS

PROPOSED SHORELINE PROTECTION

IN: LINKHORN BAY
AT: 1537 QUAIL POINT ROAD
CITY: VIRGINIA BEACH
STATE: VIRGINIA
APPLICATION BY:
MARK A. BRUNER
SHEET 3 OF 9 DATE: 7/23/93
REVISED: 8/18/93

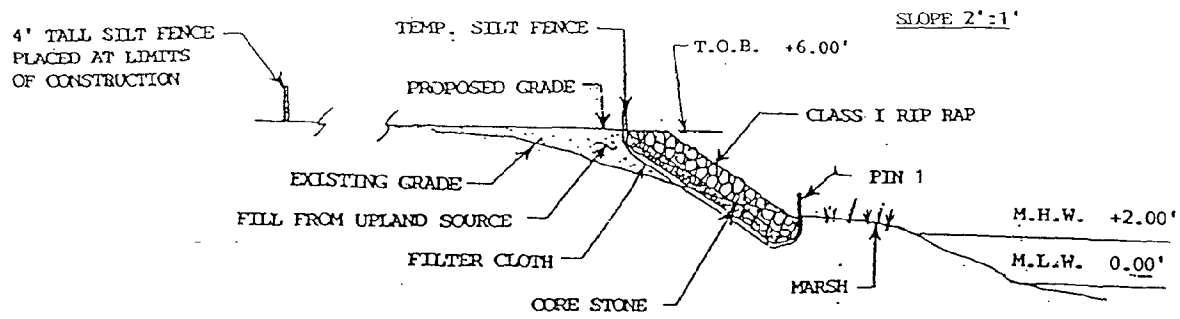

AREA TO BE EXCAVATED (MATERIALS TO BE HAULED TO AN UPLAND DISPOSAL SITE)

SECTION VIEW PIN 1 SCALE 1/8" = 1' FILL TO BE PLACED 1 TO 12' LANDWARD FROM TOP OF BANK

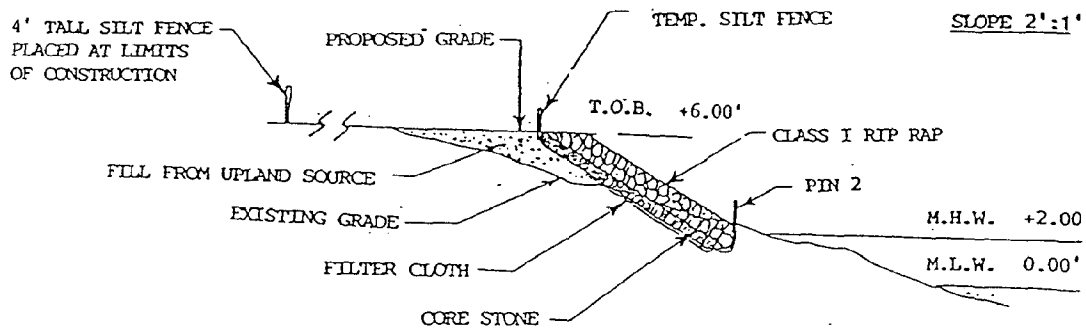

AREA TO BE EXCAVATED (MATERIALS TO BE HAULED TO AN UPLAND DISPOSAL SITE)

SECTION VIEW PIN 2 SCALE 1/8" = 1' FILL TO BE PLACED 1 TO 12' LANDWARD FROM TOP OF BANK

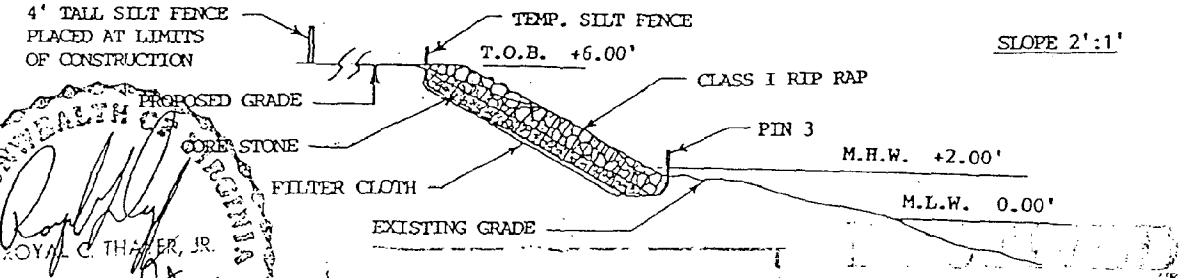

COMMONWEALTH OF VIRGINIA
ROYAL C. THALER, JR.
No. 9683
9-27-93
PROFESSIONAL ENGINEER

REVISED DRAWINGS
PROJECT 93-1056-10
VMRC REC'D 9-29-93

SEP 27 1993

Development Services Center

AREA TO BE EXCAVATED (MATERIALS TO BE HAULED TO AN UPLAND DISPOSAL SITE)

SECTION VIEW PIN 3 SCALE 1/8" = 1' FILL TO BE PLACED 1 TO 12' LANDWARD FROM TOP OF BANK

PURPOSE: EROSION CONTROL
DATUM: M.L.W. 0.00
ADJACENT PROPERTY OWNERS:
1) GRAY N. TURNER
2) DAVID H. ADAMS

SECTION VIEWS

P1, P2 and P3

PROPOSED SHORELINE PROTECTION

IN: LINKHORN BAY
AT: 1537 QUAIL POINT ROAD
CITY: VIRGINIA BEACH
STATE: VIRGINIA
APPLICATION BY:
MARK A. BRUNER
SHEET 4 OF 9 DATE: 7/23/93
REVISED: 8/18/93

REVISED 8-27-93

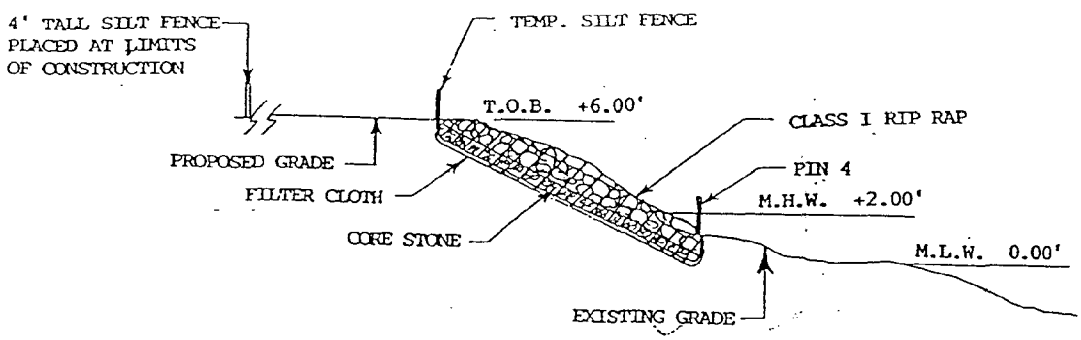

AREA TO BE EXCAVATED (MATERIALS TO BE HAULED TO AN UPLAND DISPOSAL SITE)

SECTION VIEW PIN 4 SCALE 1/8" = 1'

FILL TO BE PLACED 1 TO 12' LANDWARD FROM TOP OF BANK

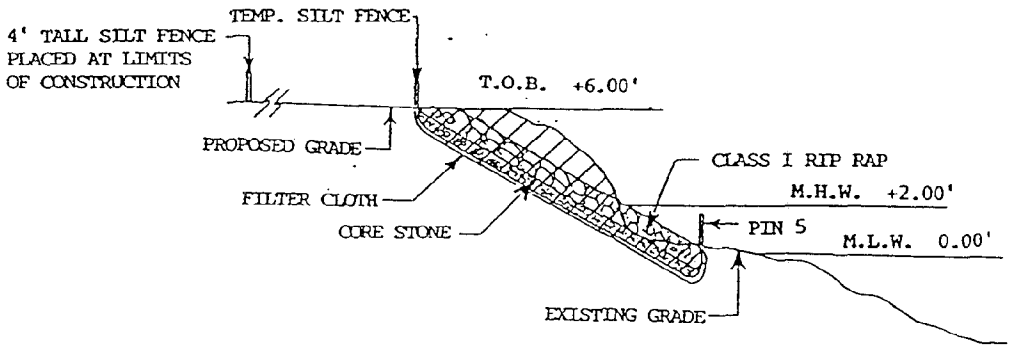

AREA TO BE EXCAVATED (MATERIALS TO BE HAULED TO AN UPLAND DISPOSAL SITE)

SECTION VIEW PIN 5 SCALE 1/8" = 1'

FILL TO BE PLACED 1 TO 12' LANDWARD FROM TOP OF BANK

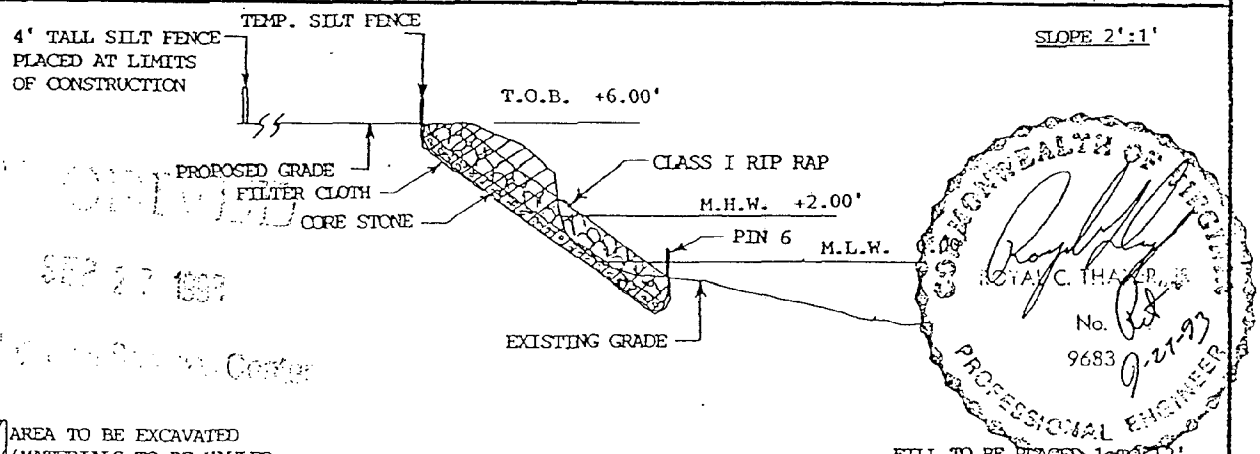

COMMONWEALTH OF VIRGINIA
ROYAL C. THARPE
No. 9683
9-21-93
PROFESSIONAL ENGINEER

AREA TO BE EXCAVATED (MATERIALS TO BE HAULED TO AN UPLAND DISPOSAL SITE)

SECTION VIEW PIN 6 SCALE 1/8" = 1'

FILL TO BE PLACED 1 TO 12' LANDWARD FROM TOP OF BANK

PURPOSE: EROSION CONTROL
DATUM: M.L.W. 0.00
ADJACENT PROPERTY OWNERS:
1) GRAY N. TURNER
2) DAVID H. ADAMS

REVISED DRAWINGS
PROJECT 93-1056-10
9-29-93

SECTION VIEWS

P4, P5 and P6

PROPOSED SHORELINE PROTECTION

IN: LINKHORN BAY
AT: 1537 QUAIL POINT ROAD
CITY: VIRGINIA BEACH
STATE: VIRGINIA
APPLICATION BY:
MARK A. BRUNER
SHEET 5 OF 9 DATE: 7/23/93
REVISED: 8/18/93

REVISED 8-27-93

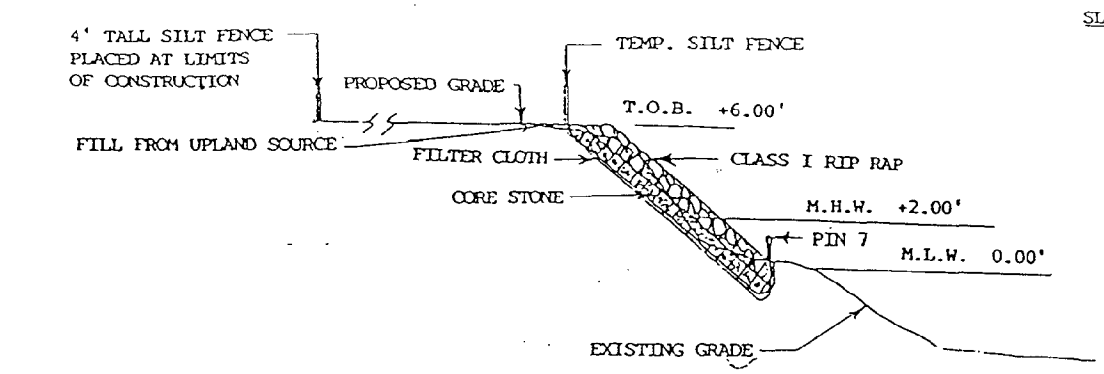

AREA TO BE EXCAVATED (MATERIALS TO BE HAULED TO AN UPLAND DISPOSAL SITE)

SECTION VIEW PIN 7 — SCALE 1/8" = 1' — FILL TO BE PLACED 1 TO 12' LANDWARD FROM TOP OF BANK

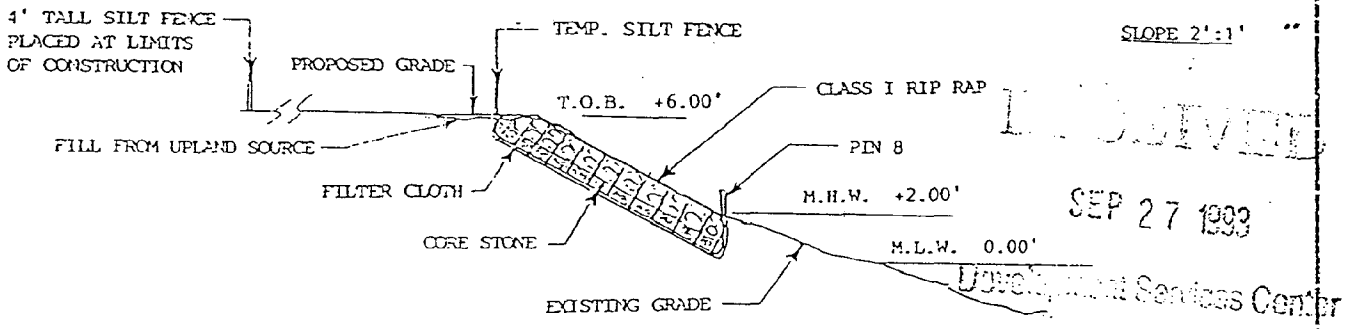

RECEIVED
SEP 27 1993
Development Services Center

AREA TO BE EXCAVATED (MATERIALS TO BE HAULED TO AN UPLAND DISPOSAL SITE)

SECTION VIEW PIN 8 — SCALE 1/8" = 1' — FILL TO BE PLACED 1 TO 12' LANDWARD FROM TOP OF BANK

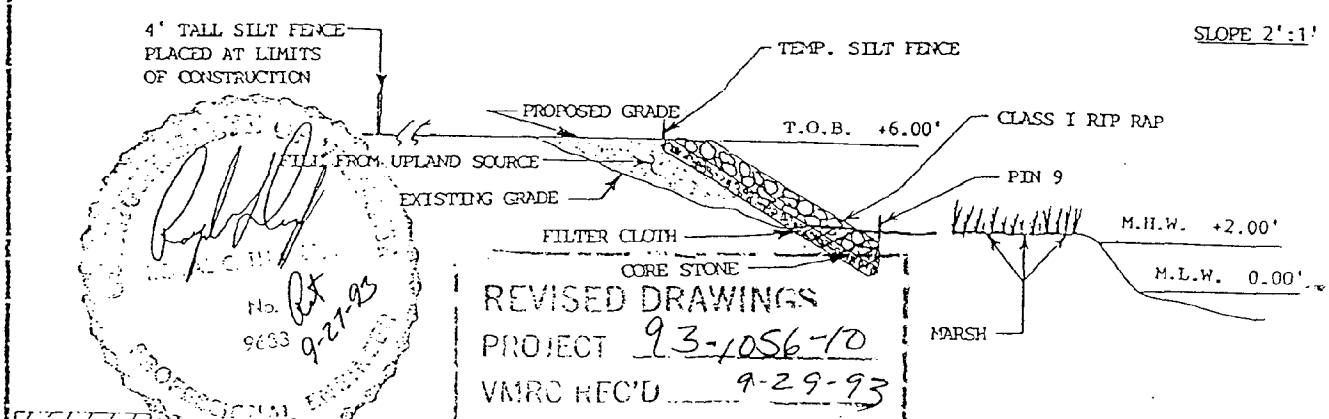

No. 9633 9-27-93
REVISED DRAWINGS
PROJECT 93-1056-10
VMRC REC'D 9-29-93

AREA TO BE EXCAVATED (MATERIALS TO BE HAULED TO AN UPLAND DISPOSAL SITE)

SECTION VIEW PIN 9 — SCALE 1/8" = 1' — FILL TO BE PLACED 1 TO 12' LANDWARD FROM TOP OF BANK

PURPOSE: EROSION CONTROL
DATUM: M.L.W. 0.00
ADJACENT PROPERTY OWNERS:
1) GRAY N. TURNER
2) DAVID H. ADAMS

SECTION VIEWS
P7, P8 and P9

PROPOSED SHORELINE PROTECTION

IN: LINKHORN BAY
AT: 1537 QUAIL POINT ROAD
CITY: VIRGINIA BEACH
STATE: VIRGINIA
APPLICATION BY:
MARK A. BRUNER
SHEET 6 OF 9 DATE: 7/23/93
REVISED: 8/18/93

REVISED 8-27-93

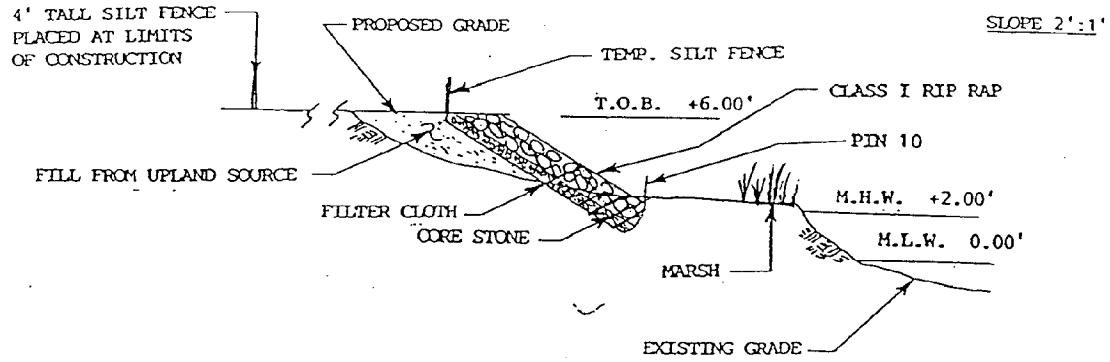

AREA TO BE EXCAVATED (MATERIALS TO BE HAULED TO AN UPLAND DISPOSAL SITE)

SECTION VIEW
PIN 10

SCALE 1/8" = 1'

FILL TO BE PLACED 1 TO 12' LANDWARD FROM TOP OF BANK

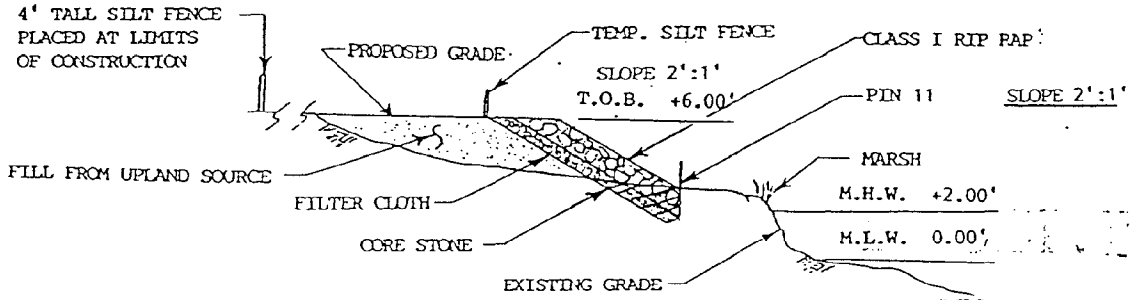

SEP 27 1993

AREA TO BE EXCAVATED (MATERIALS TO BE HAULED TO AN UPLAND DISPOSAL SITE)

SECTION VIEW
PIN 11

SCALE 1/8" = 1'

FILL TO BE PLACED 1 TO 12' LANDWARD FROM TOP OF BANK

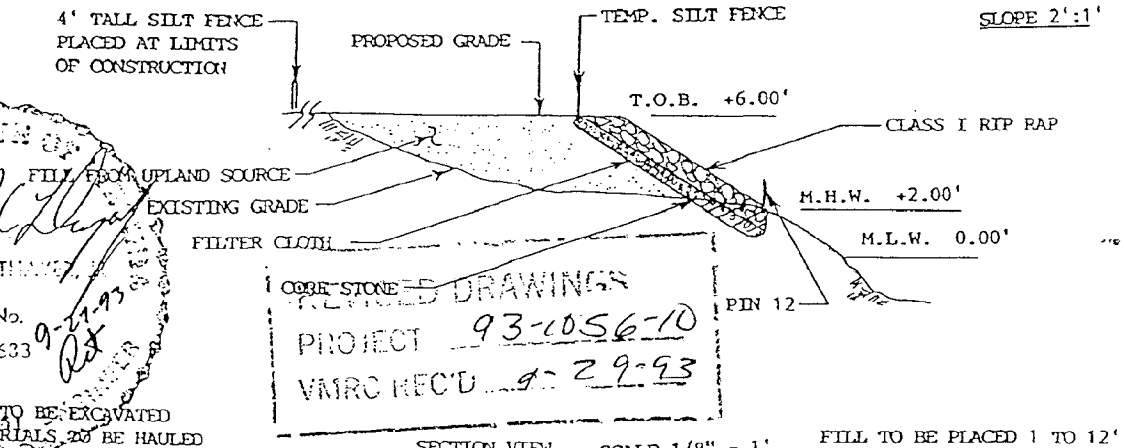

No. 9633

REVIEWED DRAWINGS
PROJECT 93-1056-10
VMRC REC'D 9-29-93

AREA TO BE EXCAVATED (MATERIALS TO BE HAULED TO AN UPLAND DISPOSAL SITE)

SECTION VIEW
PIN 12

SCALE 1/8" = 1'

FILL TO BE PLACED 1 TO 12' LANDWARD FROM TOP OF BANK

PURPOSE: EROSION CONTROL
DATUM: M.L.W. 0.00
ADJACENT PROPERTY OWNERS:
1) GRAY N. TURNER
2) DAVID H. ADAMS

SECTION VIEWS

P10, P11 and P12

PROPOSED SHORELINE PROTECTION

IN: LINKHORN BAY
AT: 1537 QUAIL POINT ROAD
CITY: VIRGINIA BEACH
STATE: VIRGINIA
APPLICATION BY:
MARK A. BRUNER
SHEET 7 OF 9 DATE: 7/23/93
REVISED: 8/18/93

GENERAL NOTES:

1) A 4' TALL SILT FENCE WILL BE PLACED AND MAINTAINED ALONG ALL ACCESSWAYS PRIOR TO THE START OF ANY CONSTRUCTION.
2) TREES THAT ARE TO BE REMOVED ARE TAGGED WITH PINK SURVEY RIBBON.
3) SAND FILL TO BE FROM UPLAND SOURCE.
4) ALL DISTURBED AREAS TO BE TOPSOILED AND SEEDED.
5) A SILT FENCE WILL INSTALLED AT THE TOP OF BANK, AND MAINTAINED UNTILL A PERENNIAL VEGETATIVE COVER IS ESTABLISHED.
6) ALL MATERIAL IS TO BE USED IN ACCORDANCE WITH THE MANUFACTURER'S RECOMENDATIONS.

SEQUENCE OF EVENTS:

1) INSTALL A 4' TALL SILT FENCE ALONG ACCESSWAYS --------- 1 DAY
2) REMOVE DEBRIS FROM SHORELINE ---------- 4 DAYS
3) REMOVE TAGGED TREES ---------- 2 DAYS
4) EXCAVATE TOE-IN-TRENCH AND RESHAPE SHORELINE ---------- 5 DAYS
5) INSTALL FILTER CLOTH AND LAY RIP-RAP ---------- 2 WEEKS
6) REMOVE SILT FENCE, ESTABLISH PERENNIAL VEGITATIVE COVER OVER ALL DISTURBED AREAS ---------- 2 DAYS

SEP 27 1993
Development Services Center

PURPOSE: EROSION CONTROL DATUM: M.L.W. 0.00 ADJACENT PROPERTY OWNERS: 1) GRAY N. TURNER 2) DAVID H. ADAMS	GENERAL NOTES AND SEQUENCE OF EVENTS PROPOSED SHORELINE PROTECTION	IN: LINKHORN BAY AT: 1537 QUAIL POINT ROAD CITY: VIRGINIA BEACH STATE: VIRGINIA APPLICATION BY: MARK A. BRUNER SHEET 8 OF 9 DATE: 7/23/93 REVISED: 8/18/93

SITE SPECIFIC SEEDING MIXTURES FOR COASTAL PLAIN AREA

	Total Lbs. Per Acre
Minimum Care Lawn	
- Commercial or Residential	
- Kentucky 31 or Turf-Type Tall Fescue	175-200 lbs.
or	
- Common Bermudagrass **	75 lbs.
High-Maintenance Lawn	
- Kentucky 31 or Turf-Type Tall Fescue	200-250 lbs.
or	
- Hybrid Bermudagrass (seed) **	40 lbs. (unhulled)
or	30 lbs. (hulled)
- Hybrid Bermudagrass (by other vegetative establishment method, see Std. & Spec. 3.34)	
General Slope (3:1 or less)	
- Kentucky 31 Fescue	128 lbs.
- Red Top Grass	2 lbs.
- Seasonal Nurse Crop *	20 lbs.
	150 lbs.
Low Maintenance Slope (Steeper than 3:1)	
- Kentucky 31 Tall Fescue	93-108 lbs.
- Common Bermudagrass **	0-15 lbs.
- Red Top Grass	2 lbs.
- Seasonal Nurse Crop *	20 lbs.
- Sericea Lespedeza **	20 lbs.
	150 lbs.

* Use seasonal nurse crop in accordance with seeding dates as stated below:

February, March through April ..... Annual Rye
May 1st through August ..... Foxtail Millet
September, October through November 15th ..... Annual Rye
November 16th through January ..... Winter Rye

** May through October, use hulled seed. All other seeding periods, use unhulled seed. Weeping Lovegrass may be added to any slope or low-maintenance mix during warmer seeding periods; add 10-20 lbs./acre in mixes.

SEP 27 1993

PURPOSE: EROSION CONTROL
DATUM: M.L.W. 0.00
ADJACENT PROPERTY OWNERS:
1) GRAY N. TURNER
2) DAVID H. ADAMS

SEEDING SCHEDULE

PROPOSED SHORELINE PROTECTION

IN: LINKHORN BAY
AT: 1537 QUAIL POINT ROAD
CITY: VIRGINIA BEACH
STATE: VIRGINIA
APPLICATION BY:
MARK A. BRUNER
SHEET 9 OF 9 DATE: 7/23/93
REVISED: 8/18/93

REVISED 8-27-93

EXHIBIT F

PROJECT COMPLIANCE ASSESSMENT

VMRC# _____
ENGINEER _____
SITE VISIT
DATE/TIME _____
OTHERS PRESENT _____
_____

1. Permittee _____

2. Location (Waterway) _____
   (City/County) _____

3. Project Description _____
   _____
   _____

4. Project Completed? YES _____ NO _____

5. Date of Permit Expiration (VMRC) _____
   (LWB) _____

6. Project Dimensions as Permitted _____
   _____
   _____
   _____

7. Project Dimensions as Constructed _____
   _____
   _____
   _____

8. Can Permit Compliance be Determined? _____ If no, explain.
   _____
   _____

9. Degree of Permit Compliance:
   In Compliance Moderate Out of Compliance

10. Additional Comments _____
    _____
    _____
    _____

11. Contractor? _____

12 Pictures Taken? YES _____ NO _____

NOAA COASTAL SERVICES CTR LIBRARY
3 6668 14111711 1