CEIP 80-93

GENERAL DEVELOPMENT PLAN REPORT

COUNTY OF ORANGE
ENVIRONMENTAL MANAGEMENT AGENCY

ALISO GREENBELT PUBLIC FACILITIES

HT
393
.C2
G46
1981

LIDYOFF/HOURIAN
LANDSCAPE ARCHITECTURE PLANNING
777 SOUTH MAIN STREET SUITE 170 ORANGE, CALIFORNIA

AUTHENTICATED
U.S. GOVERNMENT
INFORMATION
GPO

Lidyoff/Hourian
Landscape Architecture • Planning

December 1981

The Honorable Board of Supervisors
Hall of Administration
County of Orange
10 Civic Center Plaza
Santa Ana, California 92702

SUBJECT: General Development Plan and Report for Aliso Greenbelt Trail System and Public Facilities

Gentlemen:

We are pleased to submit the General Development Plan (GDP) and Report for the Aliso Greenbelt Trail System and Public Facilities. Preparation of this report was authorized by your Honorable Board on June 2, 1981.

The GDP Report is based upon the Aliso Greenbelt Management Plan prepared for the California State Coastal Conservancy in July 1979, and includes hiking, biking and equestrian trails, and picnicking and camping sites.

This report has been prepared in response to the Environmental Management Agency's concern for the proper and logical development of the trail system and other public facilities within the Aliso Greenbelt. The report provides the necessary framework for implementing the trail system and public recreation facilities within the Greenbelt.

We respectfully solicit any comments or questions you may have regarding this report.

Respectfully,

LIDYOFF/HOURIAN
Landscape Architecture and Planning

Mike Lidyoff / John Hourian

ML/JH:cp

777 South Main Street Suite 170, Orange, California 92668 714/547-0904

General Development Report for
ALISO GREENBELT PUBLIC FACILITIES

Prepared by LIDYOFF/HOURIAN, LANDSCAPE ARCHITECTS for:

COUNTY OF ORANGE
ENVIRONMENTAL MANAGEMENT AGENCY

December, 1981

Members of the Board of Supervisors:

Ralph B. Clark, Chariman, Fourth District
Roger R. Stanton, First District
Harriet M. Wieder, Second District
Bruce Nestande, Vice Chairman, Third District
Thomas F. Riley, Fifth District

This publication was prepared with financial assistance from the U.S. Office Coastal Zone Management, National Oceanic and Atmospheric Administration, under the provisions of the Federal Coastal Zone Management Act of 1972, as amended, and from the California Coastal Commission under the provisions of the Coastal Act of 1976.

TABLE OF CONTENTS

1.0 EXECUTIVE SUMMARY

2.0 INTRODUCTION

- 2.1 PROJECT HISTORY
- 2.2 BACKGROUND

3.0 SITE EVALUATION

- 3.1 PHYSICAL ANALYSIS
  - A. LOCATION
  - B. SITE DESCRIPTION
  - C. TOPOGRAPHY
  - D. SURROUNDING USES
- 3.2 BIOLOGICAL OVERVIEW
  - A. PICNIC SITES
  - B. CAMPSITES
  - C. TRAIL
  - D. RANGER RESIDENCE

4.0 GENERAL DEVELOPMENT PLAN WITH SITE SPECIFIC HABITAT MANAGEMENT PLAN

- 4.1 GENERAL DEVELOPMENT PLAN OVERVIEW
- 4.2 PICNIC SITES
- 4.3 CAMPSITES
- 4.4 BIKE TRAIL DESCRIPTION
- 4.5 HIKING/EQUESTRIAN DESCRIPTION
- 4.6 RANGER RESIDENCE SITES
- 4.7 UTILITY REQUIREMENTS
- 4.8 FIRE PROTECTION CONSIDERATIONS

5.0 GENERAL DEVELOPMENT PLAN BUDGET

6.0 BIBLIOGRAPHY

7.0 APPENDIX TO REPORT

7.1	BIOLOGICAL ASSESSMENTS	
7.2	BIOLOGICAL MAPS	B-1 thru B-7
7.3	CAMPGROUND/PICNIC SITES	S-1 thru S-7
7.4	KEY MAP TO GREENBELT TRAILS	T-1
7.5	HIKING/EQUESTRIAN TRAIL	T-2 thru T-5
7.6	BICYCLE TRAIL	C-1 thru C-3

EXECUTIVE SUMMARY

EXECUTIVE SUMMARY

This General Development Plan Report for the Aliso Greenbelt Public Facilities is a refinement of recreational activities proposed in the Aliso Greenbelt Management Program (AGMP). The AGMP was the initial step in developing a master planned approach for all facets of development, financing and management of the Greenbelt. The two documents are meant to function in concert, with this report being a refinement of recreational element of the AGMP. The GDP presents a closer look at the public recreational facilities and provides the overall frame work for the development of equestrian and hiking trails, a bicycle trail linking Aliso Beach Park with the inland residential communities, picnic and camp grounds, and alternate locations for a ranger residence.

Special consideration was given to wildlife habitat and areas of biological sensitivity in an effort to minimize the impact of man on the natural environment. Impact and mitigation measures have been identified on a site specific basis; buffer plantings are proposed to protect wildlife dispersion corridors; and in some cases where adverse impacts were unavoidable, proposed facilities in the AGMP have been relocated to less sensitive sites.

THE GENERAL DEVELOPMENT PLAN

Five basic steps by the consultant were involved in formulating the GDP for Aliso Greenbelt Public Facilities - they were:

1. Research and physical reconnaissance
2. Biological analysis
3. Developing and mapping the base data
4. Preparation of alternative schematic plans
5. Preparation of the GDP

The following are key elements of the GDP:

1. Overnight campsites - One camp ground with five (5) sites at the mouth of Corral Canyon and one camp ground with five (5) sites in Mathis Canyon are proposed with provisions for four people per site. Camping will accommodate 40 campers, per night. Access to the camping site is by hiking the equestrian trails.

2. Picnic Day Use - Five (5) picnic areas with a total of forty-five (45) individual picnic sites are located throughout the Greenbelt with access provided by linking hiking, biking or equestrian trails. The total picnic capacity proposed will be approximately 225 persons.

3. Hiking Equestrian Trails - Approximately 4.0 miles of hiking and equestrian trails are proposed. These trails would be approximately 10 feet wide, clear of brush, and graded only to achieve a level trail.

4. Bicycle Trail - Approximately 3.4 miles of bicycle trail are planned to link the inland residential communities of Aliso Viejo, Nellie Gail

Ranch and Mission Viejo with the recreational opportunities of Aliso Beach Park and the Pacific Ocean. The proposed bike trail follows the existing AWMA access road through Aliso Canyon.

5. Ranger Residence - Three alternative sites and four alternative structure types are identified and the advantages and disadvantages of each are outlined. The specific site selection and structure type will be made at a later time based upon management/operation considerations.

6. Vehicular Access - There will be no private vehicular access to the interior of the Greenbelt. Access will be available only to maintenance vehicles for the AWMA Plant, emergency vehicles and those public vehicles necessary for the operation and maintenance of the Greenbelt. A location for a parking area is proposed at Alicia Parkway and Aliso Creek at the eastern edge of the Greenbelt. This facility will serve as a staging area for hikers, equestrians, and other recreators. A future shoreline transit system linking the inland areas to Aliso Beach via the AWMA Road Right-of-Way is proposed in the AGMP Report.

7. Cost Estimates - With the exception of the ranger residence, the total cost for improvements included in the G.D.P. is $286,700. Depending on the location and alternative structure type selected, improvement costs for the ranger residence can range from $87,500 to $109,500.00

CONCLUSIONS AND RECOMMENDATIONS

The preceding summarized the important aspects of the G.D.P. Since this report addresses only one aspect of the proposed uses identified by the AGMP report, it is important to be familiar with the initial report, which contains background information and data upon which this G.D.P. report is based.

The G.D.P. is a refinement of recreational facilities and uses proposed in the AGMP and is intended to be a cost-effective frame work for implementing first phase improvements. Future refinement studies will address other land use and economic proposals of the AGMP and operation and maintenance programs one way.

The Aliso Greenbelt presents an unique opportunity to preserve a significant area of open space as a part of the County's rapidly expanding urban fabric. To achieve this goal, we recommend that the major elements of the G.D.P. be implemented as proposed.

INTRODUCTION

2.1 PROJECT HISTORY

With Orange County's rapid growth rate, "Natural" undeveloped open space will become nonexistent in the major urban areas. The need for recreation will increase with urban growth. The Aliso Greenbelt Public Faclities will provide an opportunity to preserve permanent open space acreage within that particular region of the California coastal zone.

On July 13, 1978, the State Coastal Conservancy adopted a resolution authorizing the staff to prepare a management plan for the proposed 3,200 acre Aliso Viejo Greenbelt. The Conservancy approved a work program for preparation of the Aliso Greenbelt Open Space Management Program and found that the proposed project had a high priority as a combination coastal restoration/enhancement/agricultural presentation project.

The Aliso Greenbelt Management Program was prepared by John M. Sanger Associates and become widely known as the "Sanger Report". A draft management plan of the Sanger Report was circulated in June 1979 and underwent extensive public review and comment at meetings before the Planning Commission and Harbor Beaches and Parks Commission of Orange County and the City of Laguna Beach.

A revised condensed plan based on the Sanger Report was approved in concept by the County of Orange and adopted by the Coastal Conservancy as the Aliso Greenbelt Restoration and Enhancement Plan. From the Sanger Report came two (2) Demonstration Project Maps of the Aliso Greenbelt. These maps identified the uses and proposed locations for campsites, picnic areas, equestrian, hiking and bicycle trails. These project maps along with the Sanger Report were the critera for preparing the General Development Plan.

2.2 BACKGROUND

In April, 1979, the County of Orange approved to amend the land use, circulation and noise element of County General Plan for the Aliso Viejo development area. As a condition of the amendment, the developer, the Aliso Viejo Company, has made an irrevocable contingent offer to dedicate approximately 3,400 acres. The offer expires on April 11, 1994. At the developers' request, the State Coastal Conservancy prepared the A.G.M.P. (Aliso Greenbelt Management Program). The A.G.M.P. consists of land use, financing, and administrative plans for the land specified in the offer of dedication and certain adjacent properties totaling 5,300 acres.

The Aliso Greenbelt area is composed of seven (7) large parcels, several smaller holdings and the County owned Aliso Beach and pier, which are at the mouth of Aliso Creek. The largest holding is 3,200 acres owned by the Aliso Viejo Company.

The project area contains two canyons, Wood Canyon and Aliso Creek, each having scenic, recreation, wildlife, biological, archaeological, and potential agricultural resources. From within the project area

exists panoramic vistas of the ocean from higher elevations, long canyon vistas, hiking and equestrian opportunities throughout the creek and canyon areas and a variety of wildlife and vegetative communities.

This project area is a primary link to the Orange County Trail System master plan and will provide direct access to the coast via a shoreline transit tram service, without private vehicular traffic access. Residents of the entire region will benefit from this unique trail system.

In addition to the Bike/Hiking/Equestrian trail system, picnic and overnight campgrounds will be constructed to further enhance the potential use of the project area and still preserve a "natural like" environment.

SITE EVALUATION

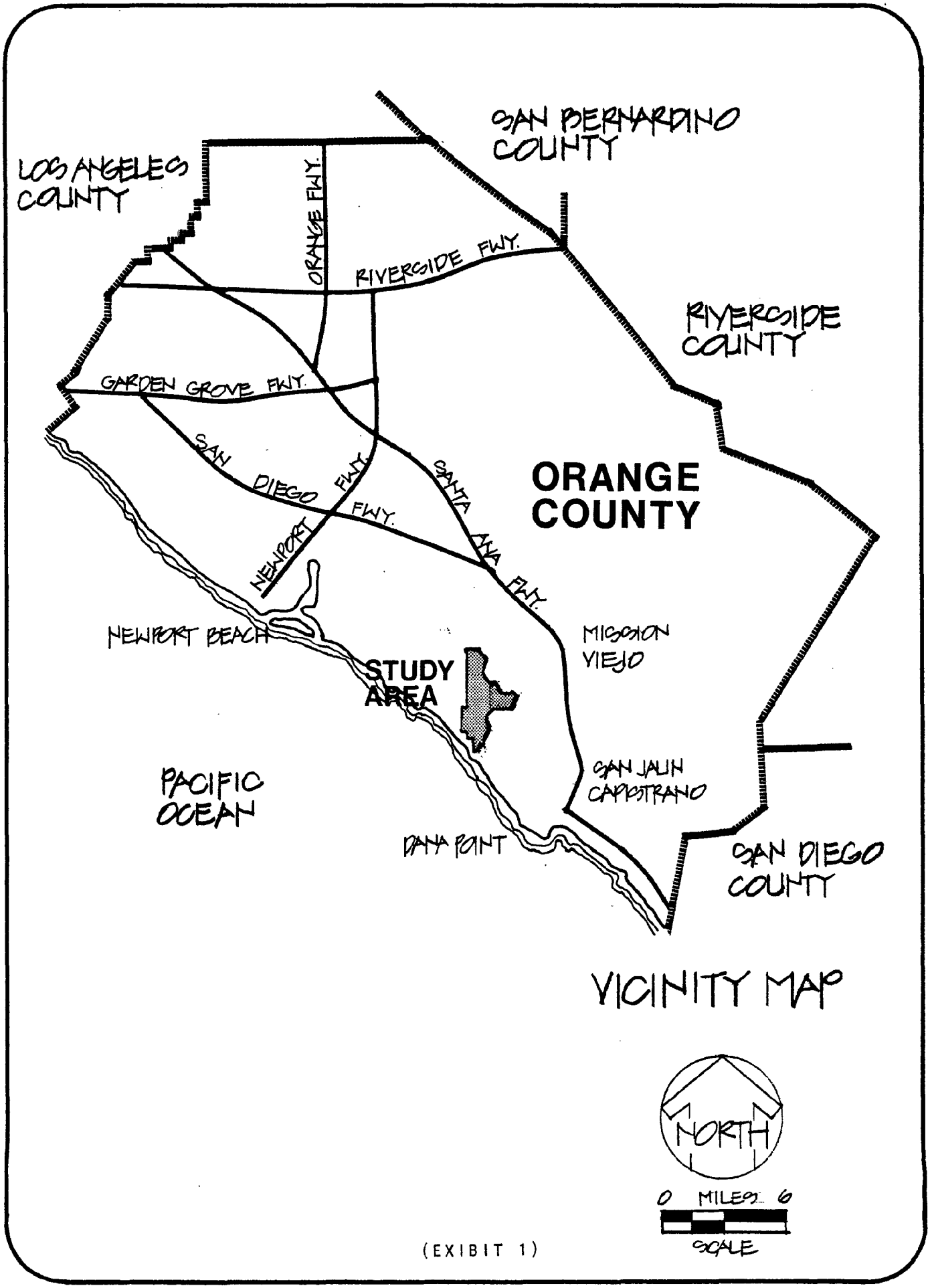
SAN BERNARDINO COUNTY
LOS ANGELES COUNTY
ORANGE FWY.
RIVERSIDE FWY.
RIVERSIDE COUNTY
GARDEN GROVE FWY.
SAN DIEGO FWY.
SANTA ANA FWY.
NEWPORT FWY.
ORANGE COUNTY
NEWPORT BEACH
STUDY AREA
MISSION VIEJO
SAN JUAN CAPISTRANO
PACIFIC OCEAN
DANA POINT
SAN DIEGO COUNTY
VICINITY MAP
NORTH
0 MILES 6
SCALE

(EXIBIT 1)

3.1 PHYSICAL ANALYSIS

A. LOCATION

The 3,200 acre Aliso Viejo Greenbelt site is located in the rolling coastal hills of southern Orange County west of Interstate 5 and inland from Pacific Coast Highway (Exhibit 1). The study area is an undeveloped enclave surrounded by areas of various levels of development intensity. It is bounded by the proposed 20,000 unit Aliso Viejo Planned Community to the north and east, the city of Laguna Beach to the west, unincorporated South Laguna to the south, and Laguna Niguel and the Federal General Services Administration (GSA) Building to the east.

B. DESCRIPTION

The majority of the Greenbelt lies within the Aliso Creek watershed which includes, Aliso Creek Canyon, Wood Canyon, and its tributaries, Mathis Canyon and Corral Canyon.

Aliso Creek Canyon forms a narrow winding canyon with steep coastal sage covered slopes that present a striking landform in contrast to the flat grassland canyon bottom. The canyon contains several significant physical and biological features. These include the Sheep Hills ravines and spur near the confluence of Aliso Creek and Wood Canyon. Moulton Meadows lies to the west across the canyon, along the ridgeline between the Top of the World and Arch Beach Heights of Laguna Beach. This area contains grasslands with wildflowers and scrub assemblages. The high points, within the Aliso Creek Corridor, are Moulton Meadows and Niguel Hill at approximately 900 feet in elevation.

Adjacent to Aliso Creek at the southernmost portion of Aliso Canyon is the A.W.M.A. central wastewater treatment plant and the Ben Brown Country Club and Golf Course. Aliso Creek terminates at the Pacific Ocean at the county owned Aliso Creek State Beach.

Wood Canyon is an area of significant natural resources, exhibiting a variety of vegetative communities, wildlife habitats, rock outcroppings, diverse landforms and vistas. The canyon contains extensive treestands of live oaks and scattered clumps of sycamores. Several significant physical and biological features are located throughout the canyon. These include: CAVE ROCKS, a large sandstone rock formation amid scattered stands of coast live oaks; DRIPPING CAVE, a side canyon approximately a quarter mile south of Mathis Canyon, that contains a high roofed cave, during the winter and spring months, pools of water form, dripping over the ledge on to ferns at the cave entrance; MALLARD MARSH, a small freshwater marsh with a variety of marsh type flora and fauna which is dependent on rainfall and ground/surface spring water. MATHIS CANYON, a tributary canyon to Wood Canyon contains grasslands, oak woodlands, coastal sage scrub communities and a clump of sycamores in the north end of the canyon. POPPY PATCH NOSE, supports a dense stand of California poppies. This is the only dense stand of poppies observed within the greenbelt. UPPER WOOD CANYON, is the only section of Wood Canyon

where large oaks and sycamores grow out into the valley floor. Wood Canyon then narrows down to a "V" shape and no longer has a valley floor with grassland cover. Large oaks now form a thick grove along both sides of the stream and extend a short distance up the slope.

C. TOPOGRAPHY

The Aliso Greenbelt is located within the California coastal range. The natural canyon relief ranges from an elevation of 20' above sea level near the mouth of Aliso Canyon to an elevation of over 900' on Niguel Hill and Moulton Meadows. Steep slopes, ridgelines, watercourses and the dominant landforms of Sheep Hills and Niguel Hill delineate the canyon boundaries within the open space area.

D. SURROUNDING USES

As southern Orange County continues to expand (Exhibit 2, Page 11), the Aliso Viejo Planned Community to the north and east of the greenbelt will eventually become a residential community of 20,000 homes. The ridgelines along Wood and Corral Canyon will be developed while the eastern slopes of the Greenbelt will act as a visual buffer which will partially block the view to the housing above.

To the west is Ben Brown's Golf Course and Country Club and Aliso Creek Beach Park, a county operated facility. This 20.7 acre stretch of shoreline at the mouth of Aliso Creek includes a fishing pier and parking facilities that will act as a terminus for a future shoreline transit system.

To the east is the 154 acre Laguna Niguel Regional Park. It is located along Sulphur Creek adjacent to La Paz Road. Park facilities include a reservoir with supporting fishing activities, picnic areas, and tennis courts.

To the north of Laguna Niguel Park is the "Ziggurat" owned by Federal Government General Services Agency. The federal building is surrounded by a huge parking lot that is proposed for use as a staging area and parking overflow for entry into the Aliso Greenbelt.

North of the federal building is the Nellie Gail Ranch. Since this is an equestrian community, equestrian trails will eventually make their way to the Greenbelt through upper Aliso Creek Valley and join established trails in Aliso Creek Canyon.

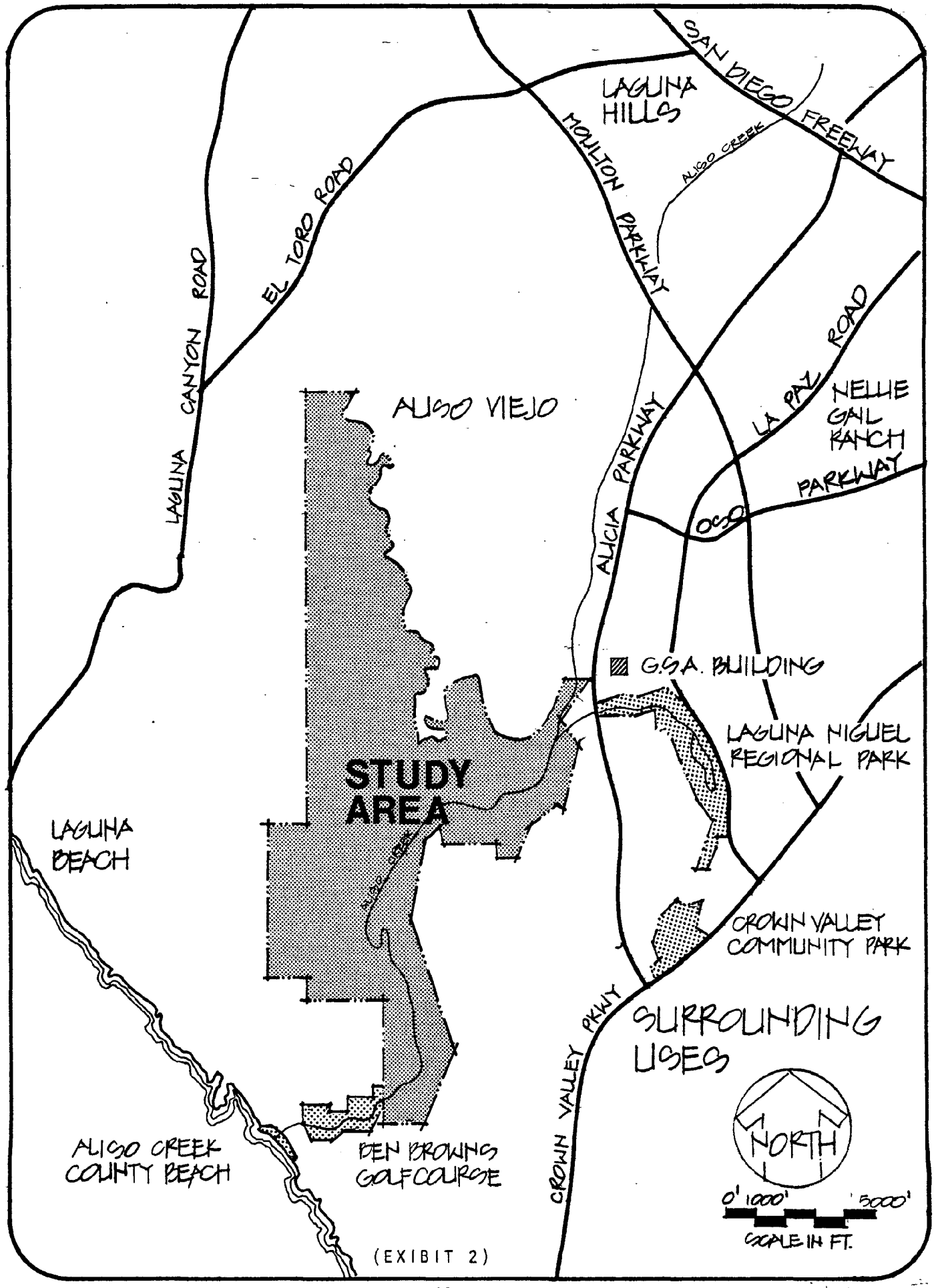
SAN DIEGO FREEWAY
LAGUNA HILLS
ALISO CREEK
MOULTON PARKWAY
EL TORO ROAD
LAGUNA CANYON ROAD
ALISO VIEJO
LA PAZ ROAD
NELLIE GAIL RANCH
PARKWAY
ALICIA PARKWAY
OSO
G.S.A. BUILDING
LAGUNA NIGUEL REGIONAL PARK
STUDY AREA
LAGUNA BEACH
CROWN VALLEY COMMUNITY PARK
CROWN VALLEY PKWY
SURROUNDING USES
NORTH
0' 1000' 5000'
SCALE IN FT.
ALISO CREEK COUNTY BEACH
BEN BROWNS GOLF COURSE

(EXIBIT 2)

Plans for future development of the South County area include a linking of Aliso Viejo's Greenbelt Trail System to surrounding parks and communities in the region.

The Aliso Creek Corridor Specific Plan (Concept) shows equestrian and bicycle trail connections from Laguna Niguel Regional Park to the Crown Valley Community Park and Crown Valley Parkway/via Aliso Creek.

The Master Plan of Countrywide Bikeways shows a recreation oriented bicycle trail on La Paz Road connecting with Moulton Parkway on the north and Crown Valley Parkway on the south. The Regional bike trail will then link with the Aliso Viejo Trails System. Thus, the Aliso Viejo Trails System will serve as a major access point to the extensive open space system making it possible to travel from the oceans to the mountains(2) further enhancing the use of the Greenbelt.

(2) Aliso Creek - Forest To The Sea, U.C. Irvine Aliso Creek Study Team, 1973.

3.2 BIOLOGICAL OVERVIEW

Within the "Sanger Report", two maps were prepared showing the approximate location of each proposed picnic site, campsite, hiking, and equestrian/bike trail routes. To prepare the General Development Plan, Lidyoff/Hourian used the Demonstration maps in the Sanger Report, as a guideline to locate the following amenities:

- Overnight Camping Areas
- Day Use Picnic Areas
- Equestrian and Hiking Trails
- Bike Trails
- Alternative Ranger Residence Site with Nature Interprative Area

Field observations were made with a biologist and county personnel, to determine the validity of each site and trail route as proposed in the Sanger Report.

Based on biological assessments, constraints and analysis, development recommendations were made for: 1) six proposed picnic areas, 2) two overnight campsites, 3) ranger residence site. and 4) hiking/biking/equestian trails. An overall park habitat and management plan for the maintenance and park operations were not part of the criteria in the development of this report. However, considerations were given to site specific biological habitats and mitigating measures have been identified and proposed (3).

Biological assessments include inventories of flora (Exhibit 3, Page 15) and fauna species, present evaluation of each site's habitat potential, spatial relation of proposed development areas to local or regional wildlife pathways and description of approximate location of tree specimens within or adjacent to each site or trail.

Biological constraints include possible impact on tree specimens within or in the vicinity of recreational development sites, potential disruption of wildlife habitats or dispersion corridors, and disturbance or destruction of rare or endangered plant species populations and sensitive vegetative communities.

After the biological information was interpreted, conflicts between the proposed uses and endangered plant species were documented (3). To mitigate environmental damage alternative sites were identified and additional plantings of native material were proposed.

The two biologically sensitive areas were identified: Mallard Marsh Picnic Site; and the Moulton Meadows Campground.

3. Biological/Assessment Aliso Viejo Greenbelt, Karlin Marsh, July 1981

The proposed picnic site at Mallard Marsh was relocated to a "less" biological sensitive area, because the area is usually "wet". At the request of Fish and Game Department, the group campground at Moulton Meadows was omitted, because of a nearby deer fawning area. Human intrusion: To the area northerly, of Del Mar Avenue would impact and disrupt the animal dispersion corridor.

The following map and charts delineate biological constraints and mitigations for the individual campsites, picnic sites and trail systems.(3) In the attached appendix, aerial photographs identify plant material surrounding the proposed trails, campsites and picnic areas.

3. Biological/Assessment Aliso Viejo Greenbelt, Karlin Marsh, July 1981.

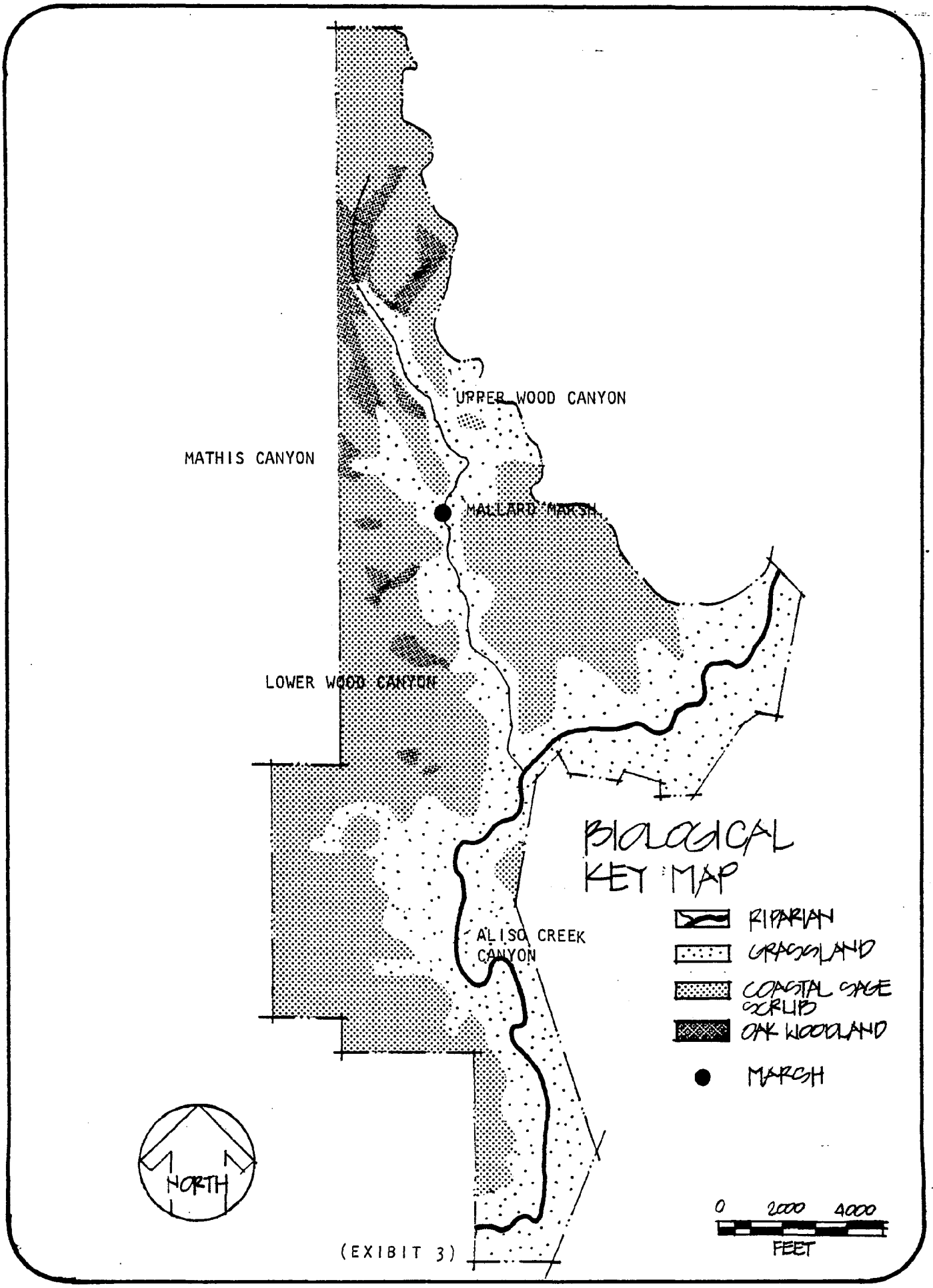
UPPER WOOD CANYON
MATHIS CANYON
MALLARD MARSH
LOWER WOOD CANYON
ALISO CREEK CANYON
BIOLOGICAL KEY MAP
RIPARIAN
GRASSLAND
COASTAL SAGE SCRUB
OAK WOODLAND
MARSH
NORTH
0 2000 4000
FEET

(EXIBIT 3)

A. PICNIC SITES	BIOLOGICAL CONSTRAINTS	MITIGATIONS
Equestrian Picnic Site	Introduction of people will disturb the nesting habitat of the Great Blue Heron and the Green Heron.	Vegetative screening with sycamores and willow trees will be required to screen the creek inhabitants from visual disturbance.
Horseshoe Bend Picnic Site	Site contains very minimal biological constraints, but area lacks shade for picnic users. The stream changes course which could destroy improvements.	Planting of additional sycamores to provide shade and cover. Rock rip-rap should be installed to stablize stream course.
Mallard Marsh	Due to close proximity of picnic site to Mallard Marsh the California Fish & Game Department requested the site be moved becuase of probable biological and ecological harm.	Site was subsequently relocated to Cave Rock.
Cave Rock Picnic Site	Stream channel in upper Cave Rock spur has been downcut severely. Also oaks with sensitive root systems located around the sandstone rock outcrop area.	Fencing or signage should be placed along stream margin to prevent accidental falls. Information signage should be placed around sensitive oak zone to bring awareness to individuals using picnic sites.

A. PICNIC SITE	BIOLOGICAL CONSTRAINTS	MITIGATIONS
Mathis Canyon - Picnic Site	Root sensitive sycamore and oak woodland area. Site situated in high fire hazard zone.	Additional stands of sycamore trees should be planted to provide variety of picnic areas and to provide the landscape to rejuvenate and allow airation of tree roots.
Upper Wood Canyon -	Sensitive songbird habitat in trees surrounding picnic site. Creek margin adjacent to picnic site has been downcut. Site situated in high fire hazard zone.	At the recommendation of the Fish & Game Department the picnic tables should be located in the presence of a biologist to minimize the impact on the avian habitat to the south. Fencing should be constructed along creek margin to prevent accidental falls.

B. CAMPSITES	BIOLOGICAL CONSTRAINTS	MITIGATIONS
Mathis Canyon Campsites	The introduction of people will impact the nearby mule deer habitat and on-site dispersion trail. The area along the toe of slope is a seasonally wet meadow. During summer site is situated in high fire hazard zone.	Provide vegetative screening of toyon between campsite and dispersion corridor. This will permit nocturnal feeding of the mule deer and will not interfere with the dispersion route. Plant additional sycamore trees to provide shade and cover. To lesson the hazards of fire, a Park Ranger should remain on site, and a waterline for fire fighting should be installed.
Wood Corral Canyon Campsite	Minimal biological constraints. Site located in high fire hazard area.	Plant additional sycamore trees to provide shade and cover. See above for reducing fire hazards.
Moulton Meadows	The Moulton Meadow Camp Site was omitted after biological analysis determined that development would biologically harm endangered plant species, and impact native wildflowers and grasslands. This area was also found to contain a mule deer fawning habitat, along the lower ridges. If development is to occur, it is recommended that it should be limited to an active interpretation program to inform people of the unique biotic resources, namely the deer fawning habitat, and endangered plant species.	

C. TRAILS	BIOLOGICAL CONSTRAINTS	MITIGATIONS
AWMA Road Bike Trail	No biological constraints.	Additional grading will be required in some areas adjacent to Awma Road. See engineered drawings.
Equestrian Trail	No biological constraints.	See drawings.
Wood Canyon Hiking Trail	No biological constraints.	Area near Upper Wood Canyon picnic site. Sycamore stands need trimming of over-hanging tree branches.

D. RANGER RESIDENCE	BIOLOGICAL CONSTRAINTS	MITIGATIONS
Corral Canyon	No biological constraints.	None.
Wood/Mathis Canyon	No biological constraints	None.
Aliso/Wood Canyon	Site is subject to sporadic swampy conditions during rainy seasons. Rock outcrops behind the proposed ranger residence are potential localities for two rare and endangered plant species, Orange County Turkish Rugging and Many-stemmed Dudleya. No such remnants were found but the possibility is great that one or both are present around some of the outcrops. Slopeland is a deer resting area.	Slopeland environment ideal location for interpretive natural trail. Trail use should be limited or prohibited during deer fawning season.

GENERAL DEVELOPMENT PLAN

4.1 GENERAL DEVELOPMENT PLAN

The concept for the General Development Plan of the Aliso Greenbelt Public Facilities is based upon: 1) Sanger Report demonstration plan maps provided by the California Coastal Conservancy, and 2) Biological assessments and data. The greenbelt trail system is intended to afford maximum public access within the greenbelt, consistent with resource protection while maintaining high quality diverse recreational experiences.

The greenbelt trail system focuses on access to the greenbelt from all surrounding communities and connections with regional trail systems. Multiple recreational travel opportunities will be provided (Exhibit 4, Page 24), including walking and hiking, bicycling, horseback riding and recreational transit service. Vehicular access will be restricted to the minimum necessary for essential support of proposed greenbelt use and management requirements. A public transit system is proposed through the Aliso Creek Canyon corridor to the coast to provide access to the coast and beach from inland communities. Private vehicle use will be restricted to Aliso Creek Beach Park and the eastern entrance at Alicia Parkway.

Due to the sensitive nature of the greenbelt environment, priority has been given to habitat protection and enhancement. The greenbelt shall be retained in its natural state in so far as feasible for park users to experience a natural coastal canyon.

Low intensity, primarily passive usage, is proposed within the scattered locations throughout Wood Canyon and lower Aliso Canyon subunits.

Small day use picnic areas are sited in the following five locations; three picnic areas in the Wood Canyon/Mathis Canyon area, a fourth picnic site in upper Aliso Canyon, and the last site in lower Aliso Canyon adjacent to Aliso Creek. Access to the picnic sites will be along the designated hiking/equestrian trails. The only exception, is the lower Aliso Creek picnic site which is accessable by the proposed shoreline transit and bicycle trail.

Two campsites are identified. One is a small (3-5 acre) site in middle Wood Canyon, the second is a larger (15-20 acre) site to be used as a group campsite, located in Mathis Canyon. The location of a nearby ranger residence would monitor the activities and render assistance to ensure the safety of campers and the greenbelt environment.

Since many of the picnic/campsites are located on grassland valley floors, there is no shade cover. In accordance with the biological recommendations, planting of native oaks and sycamores along with toyon is proposed to provide shade and preserve the natural environment with indigenous plants. The picnic and campsite development are equal to the U.S. Forest Service Level II classifications:

1 - Dry without water

2 - Portable toilets

3 - Picnic tables

4 - Fire pits

The following foldout map, delineates individual picnic and campsite locations, indicating the number of tables per site, picnic/campsite designations and landscape recommendations. Aerial photographs of each site are included as an appendix to this report.

4.2 PICNIC SITES

A. EQUESTRIAN PICNIC SITE

Located on a level stream bench, near the north end of the greenbelt, on the east bank of Aliso Creek. Access to the site is from the designated equestrian trail. The site will have ten (10) picnic tables (Figure 1), a horse watering trough with a hand operated pump and a hitching post for securing horses (Figure 2). Adequate trash storage container with lids shall be provided.

B. ALISO CREEK HORSESHOE BEND SITE

Located in lower Aliso Canyon, south of Horseshoe Bend. The site is generally level and will be accessible by the proposed A.W.M.A. transit system and bike trail. Ten (10) picnic tables will be provided in addition to a 20 space bicycle rack (Figure 3). Adequate trash storage containers with lids shall be provided.

C. CAVE ROCK SITE

Located on the west side of lower Wood Canyon below Mallard Marsh, this site is identified by a significant sandstone rock outcrop with various sized caves. Five (5) picnic tables will be provided. Access will be from the Wood Canyon Equestrian/Hiking Trail. Adequate trash storage containers with lids shall be provided.

D. MATHIS CANYON GROUP PICNIC SITE

This picnic site is located on the level canyon floor in the vicinity of the existing sycamore stand. Additional trees will be planted and as they mature the ten (10) picnic tables will be rotated periodically to avoid overuse and allow the landscape to recover. This site will be primarily group oriented and can accommodate approximately sixty people. Adequate trash storage containers with lids shall be provided.

E. UPPER WOOD CANYON

This site is the furthest north from the confluence of Aliso and Wood Canyon. The site is located on a level stream bench between the Wood Canyon Equestrian/Hiking Trail and the Creek. Ten (10) picnic tables and a hitching post (Figure 2) will be located among the existing sycamore stand. The picnic tables will be rotated on a periodic basis to allow the landscape to recover and avoid compaction of soil around the trees root systems. Adequate trash storage containers with lids shall be provided.

4.3 CAMPSITES

A. MATHIS CANYON CAMPSITE

This group campsite is located on the north side of the canyon floor. This fifteen acre site will have nine (9) group campsites each accommodating approximately sixteen people. Each campsite (Figure 4) will have a raised concrete fire enclosure for cooking and campfires (Figure 5). Also four portable toilets will be located near the Mathis Canyon trail adjacent to the campsite. Adequate trash storage containers with lids shall be provided.

Since the campsite is located in a wildlife dispersion corridor a vegetative screening of Toyon will be planted allowing animals to pass into the canyon, behind the protective screening.

B. WOOD CANYON CAMPSITE

This campground site is located on a level stream bench at the 'V' shaped confluence of Wood and Corral Canyon. The four acre site will accommodate five (5) campsites each having a raised concrete fire enclosure (Figure 6). Additional Sycamore trees will be planted for shade and cover. The site is accessible by the Wood Canyon, Hiking/Equestrian Trail. Adequate trash storage containers with lids shall be provided.

4.4 BIKE TRAIL DESCRIPTION

The plans show the proposed alignment of the Bikeway adjacent to the existing AWMA access road. This Bikeway extends from Ben Brown's golf course to Alicia Parkway. The engineered plans, in the attached appendix, show the limits of grading required to construct the bikeway, drainage, and other necessary improvements

The horizontal alignment of the proposed bikeway was checked for conformance with design standards for stopping sight distance and lateral clearance on horizontal curves as contained in the Planning and Design Criteria for Bikeways in California. As proposed, the bikeway has no horizontal line of sight limitations.

There are three areas; (refer to engineered drawings) from station 28 + 00 to 30 + 00, from station 31 + 00 to 33 + 00, and from station 83 + 15 to 85 + 00 where the cut slope ratio was increased to 1:1 maximum; and one area from station 9 + 50 to 12 + 99.82 where the cut slope ratio was increased to 1/2:1 maximum. These ratios were increased from the normal 1 1/2:1 maximum to limit the cut slope height to 30 feet because cut slopes above 30 feet require benching and special drainage considerations. It is recommended that when final design begins on the bikeway, a geotechnical consultant be retained to recommend a cut slope ratio that will be stable in these areas or that some other solution be selected. During initial field

investigation of these areas, it was noticed that steeper slopes than 1 1/2:1 were cut at these areas when the access road for the coastal treatment plant was improved.

4.5 HIKING/EQUESTRIAN TRAIL DESCRIPTION

The Sanger Report Demonstration Maps indicated the proposed location of three (Phase I) hiking/equestrian trails: ALISO CREEK TRAIL, extends for 1.38 miles from Alicia Parkway to the confluence of Wood and Aliso Canyon. WOOD CANYON TRAIL, extends 2.74 miles from the end of the Aliso Creek Trail, northerly where it will terminate at the Aliso Greenbelt and Dewitt property line. MATHIS CANYON TRAIL, extends .47 miles northerly from the Wood Canyon trail to the Mathis Canyon picnic and campground sites. A coordinate list of points located in the field by surveyors is available for future references. Those points are plotted on the plans and are indicated by a triangle and number (refer to engineered drawings).

The hiking/equestrian trails will follow the existing farm roads and cattle trails. The trails will be cleared of vegetation by a caterpillar type tractor with a ten foot blade (figure 7). This will allow equestrian riders and hikers ample room to pass one another. Signage (fig.8) will be used to designate trail heads and indicate picnic and campground locations. Since the Greenbelt will be retained in a natural-like state, it is suggested that information signage be provided at each park entry, acquainting visitors with the various biological habitats.

Investigated, was the possibility of constructing a low flow concrete dip crossing with culvert pipes to convey the dry weather flows where the Aliso Creek Hiking/Equestrian Trail crosses Aliso Creek. The dry weather flows are estimated to be in the range of 10 to 15 c.f.s. and would only require two 24-inch culverts. The cost of the culvert crossing would be in the range of $3,000 to $4,000.

The 100 year storm flow is 10,800 c.f.s. and a one year storm flow would be approximately 4,100 c.f.s. Due to the large volume of water generated by a minor storm, the stream bed of the creek would erode around the culvert. Because of this, we do not recommend that a low flow concrete dip crossing be constructed. Equestrian riders will cross existing stream bed.

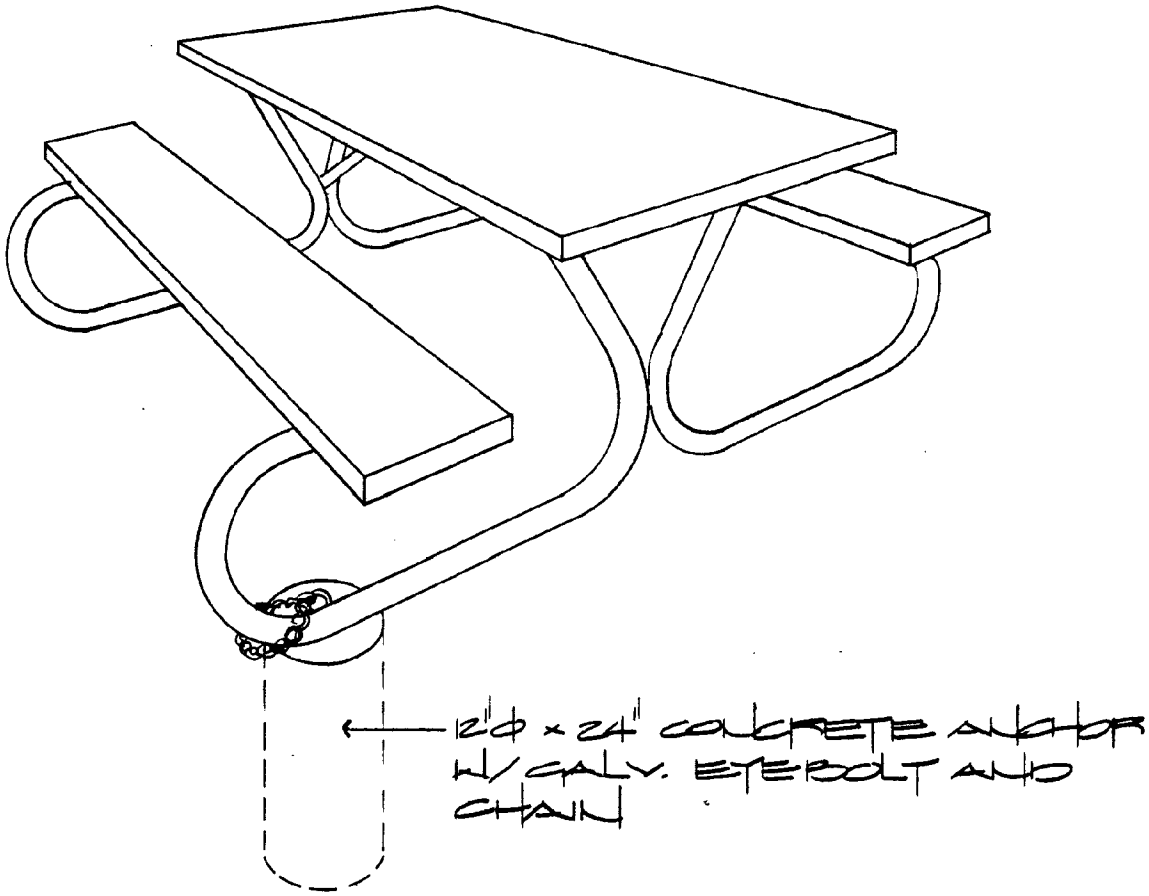

SOLID TOP PERMA GLASS TABLE

MIRACLE MODEL NO. 1118-2 W/ MIRACOTE FINISH OR EQUAL

(FIGURE 1)

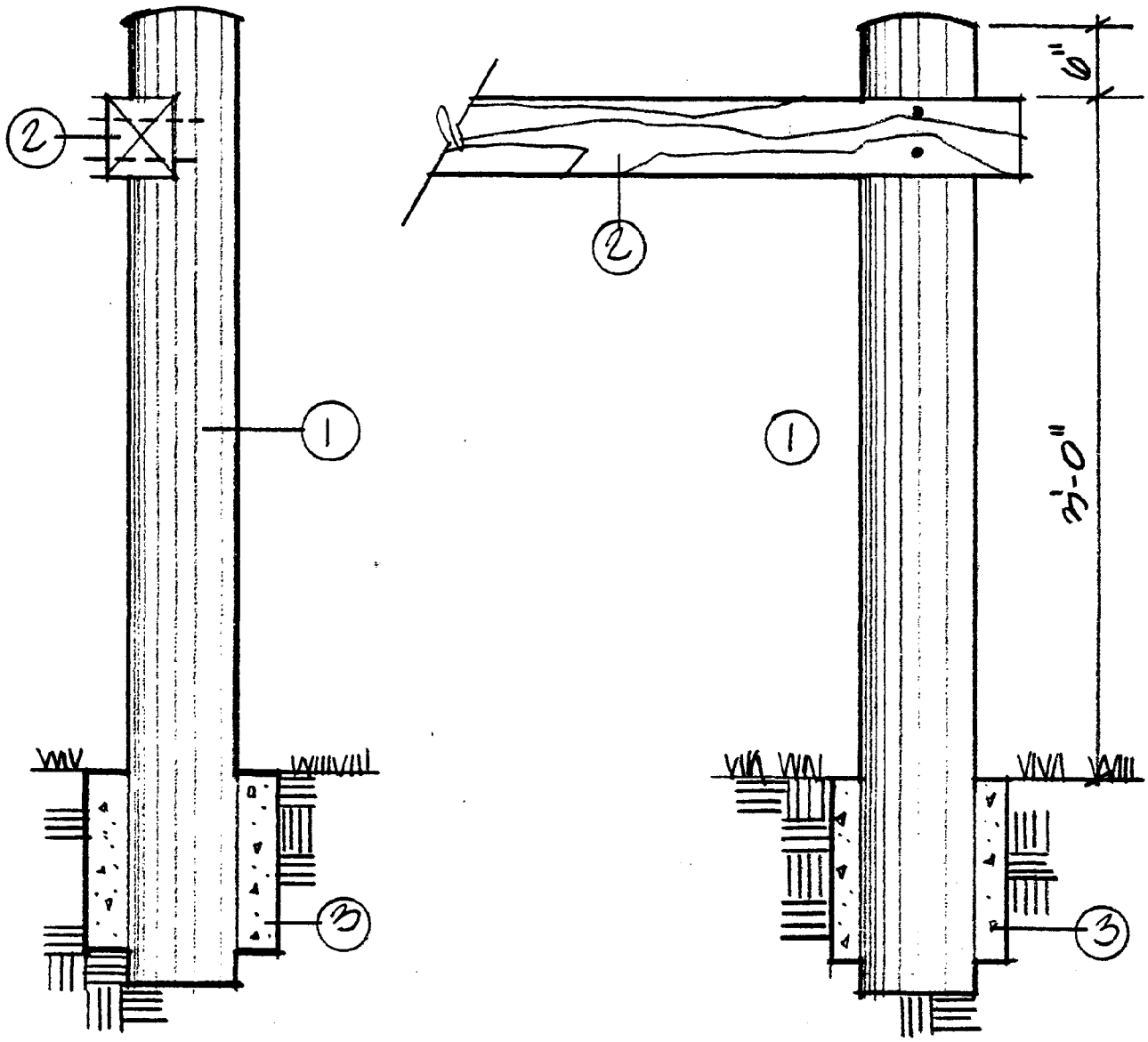

HITCHING POST

1. 8" DIA. PRESSURE TREATED LOG
2. 4"x4"x10'
3. CONCRETE FOOTING
   16" DIA. x 24" DEEP

(FIGURE 2)

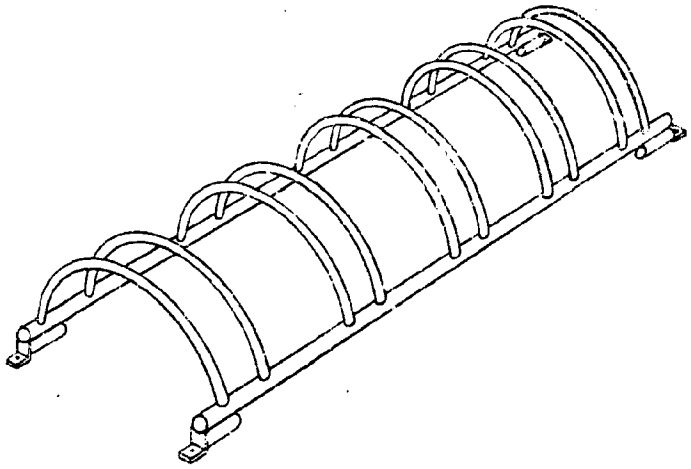

TYPICAL ARCH RACK
FOR BIKE STORAGE

MODEL # 1612-20
SPACES · 20
LENGTH · 13'-3¼"
PATERSON-WILLIAMS
OR EQUAL

(FIGURE 3)

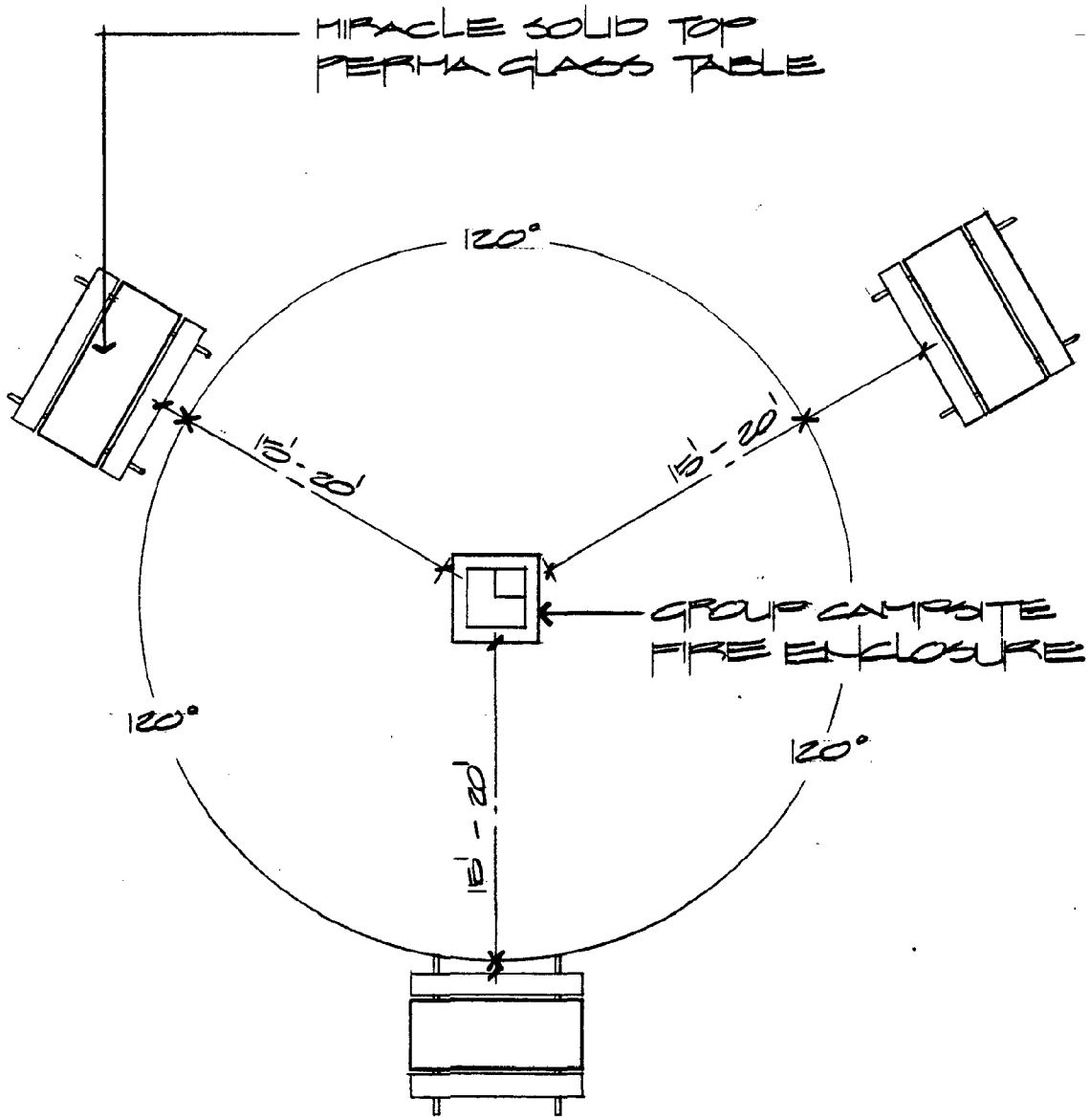

TYPICAL GROUP
CAMPSITE AREA

(FIGURE 4)

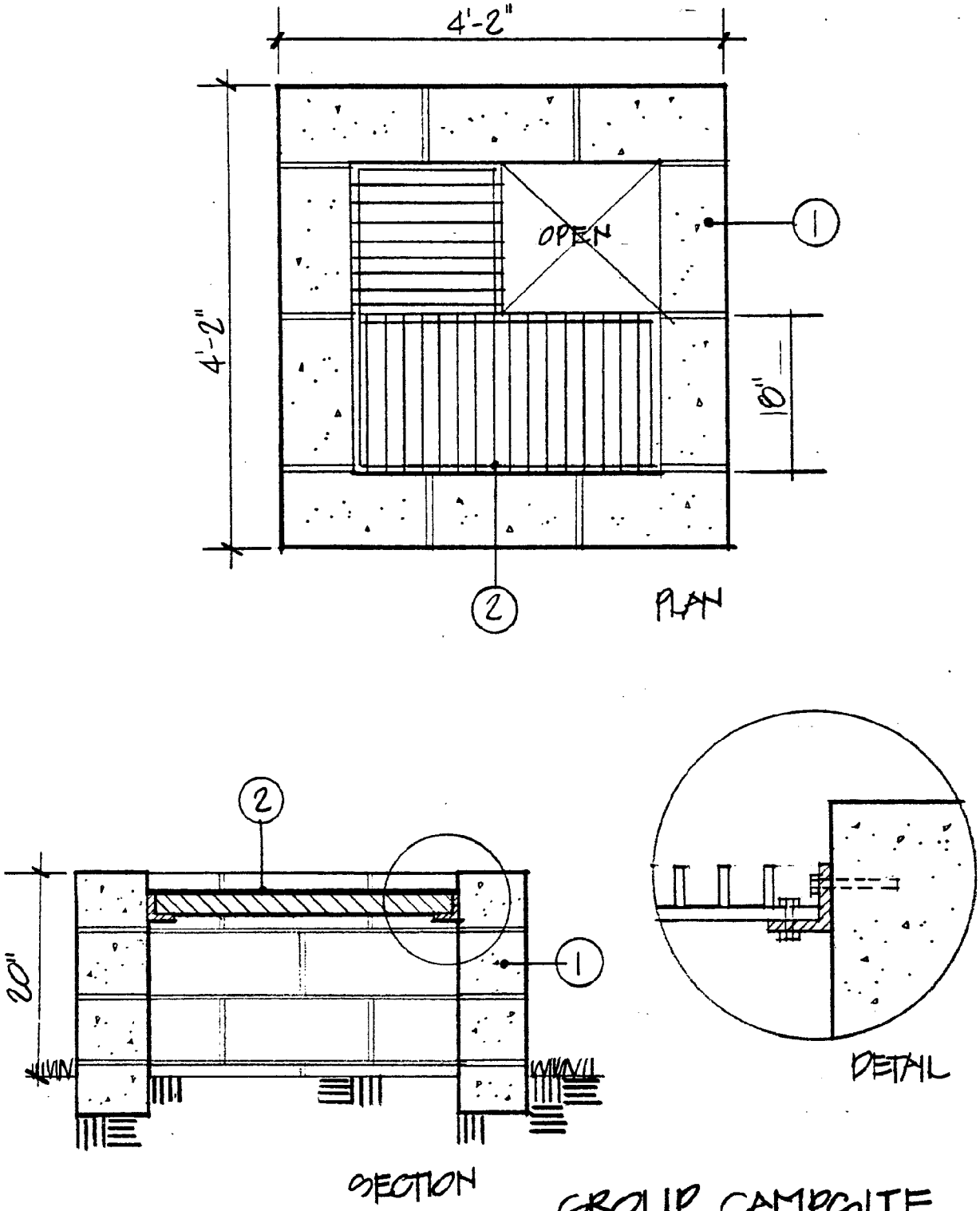

GROUP CAMPSITE
FIRE ENCLOSURE

1. 6x8x16" CINDER BLOCK
2. STEEL GRATE

(FIGURE 5)

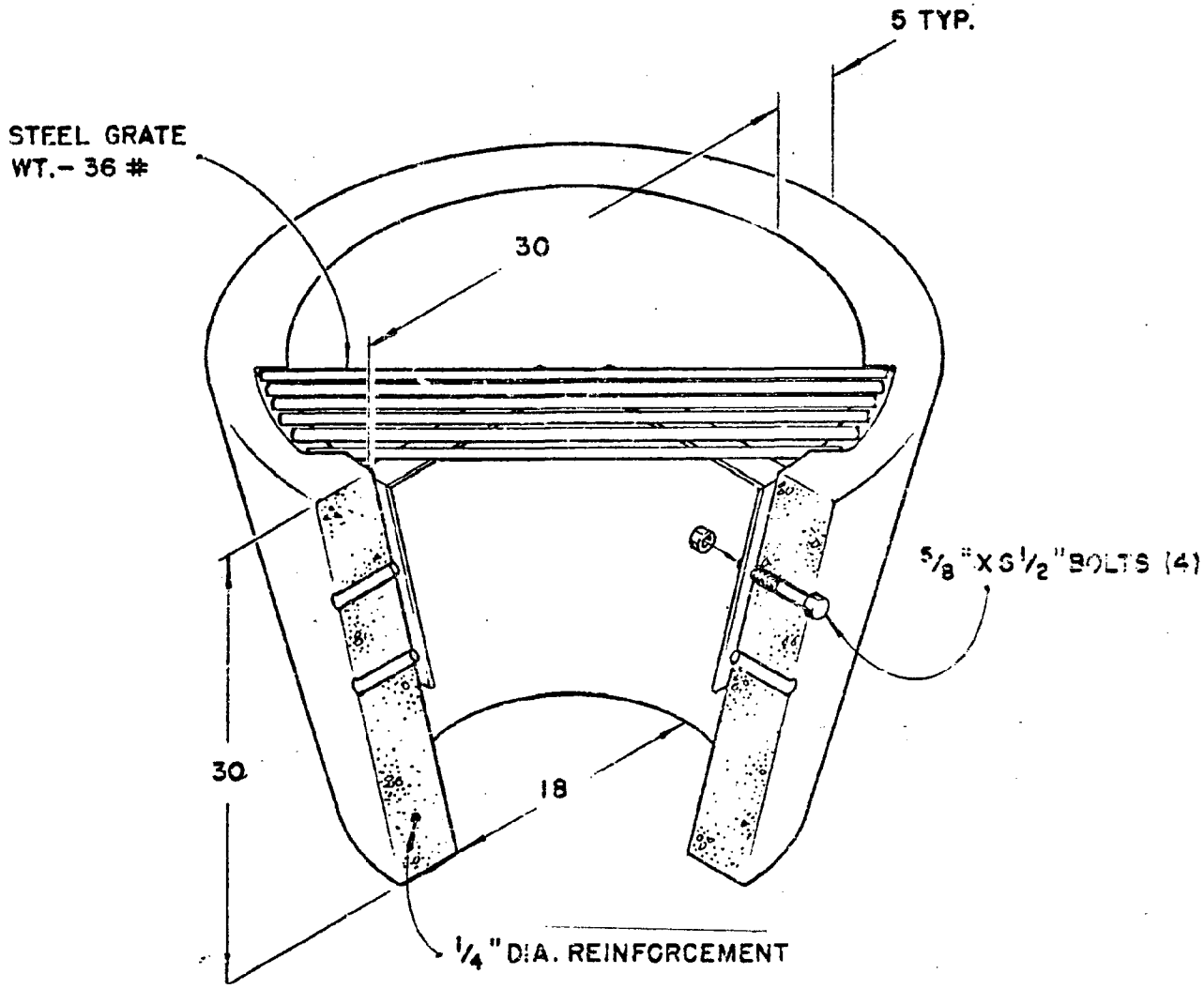

TYPICAL PICNIC/CAMPSITE
FIRE ENCLOSURE

CONCRETE STOVE
NO 75H
BROOKS PRODUCTS INC.

(FIGURE 6)

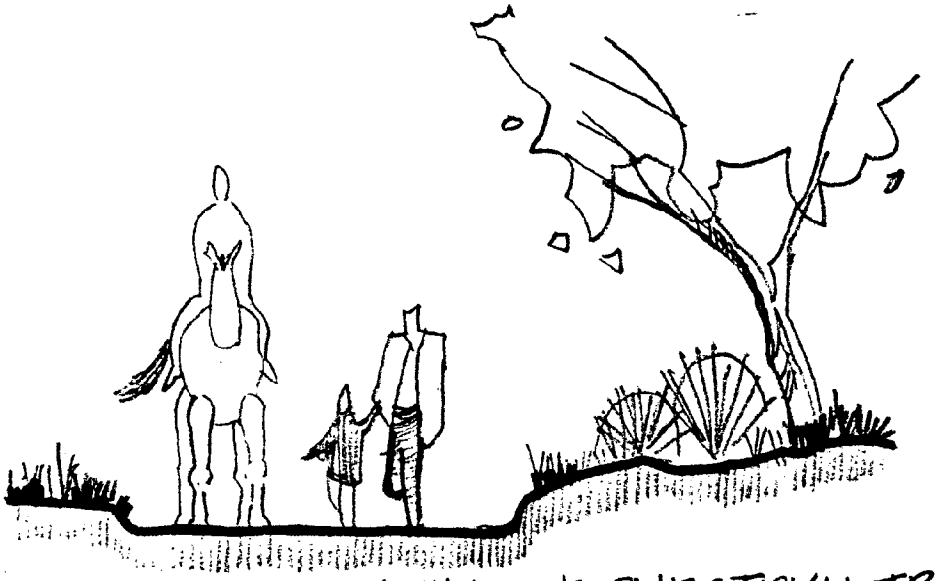

HIKING EQUESTRIAN TRAIL

NTS

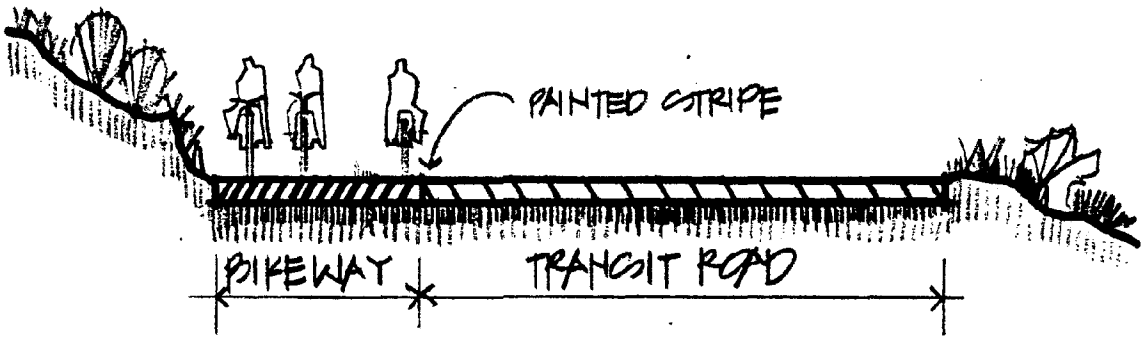

BICYCLE TRAIL

NTS

(FIGURE 7)

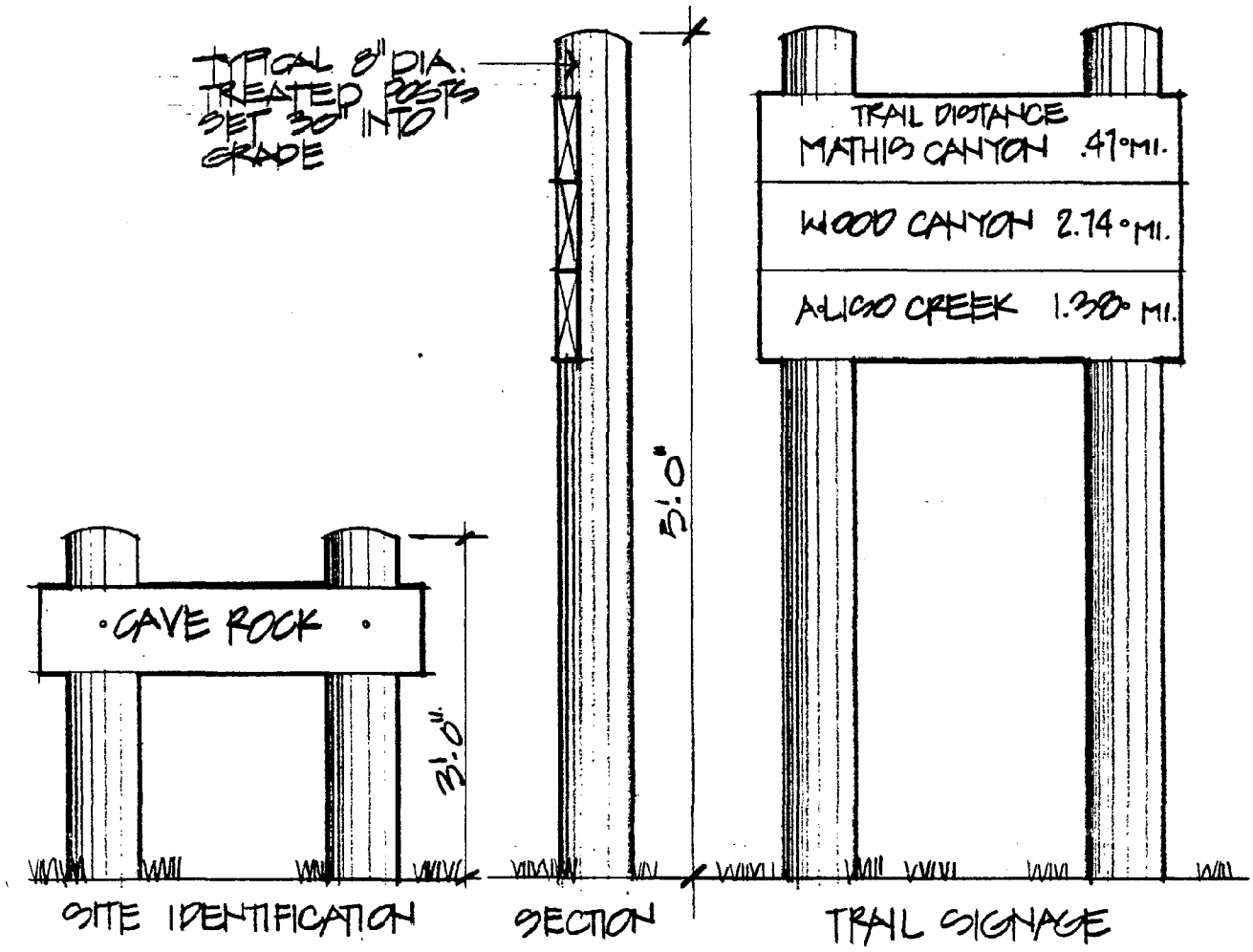

INFORMATION SIGNAGE

N.T.S.

(FIGURE 8)

4.6 RANGER RESIDENCE

For greenbelt management and security, a resident ranger/manager is proposed to be employed. The resident ranger will provide routine maintenance, security, emergency assistance, control of greenbelt use and public education.

The Aliso Greenbelt Ranger Residence is to be designed for living quarters and office for one or two employees requiring at least 700 sq. ft. Except for requesting information and emergencies, the residence is to be for management/employee personnel use only and no considerations made for public use.

To compare the alternative structures available for this type of use, four types of construction systems and seven comparison elements have been considered. The construction systems represented in this study are: 1) mobile home, 2) modular home, 3) prefabricated units, and 4) custom design and construction. The comparison criteria include: 1) initial cost, 2) maintenance, 3) durability, 4) liveability, 5) flexibility, 6) expandability, and 7) compatibility with the park environment. For ease of comparison the evaluation is presented as a chart on the following pages. Additional explanations of the rating evaluations are presented on subsequent pages. Data for this comparison was obtained from the following sources:

1. Mobile home
   A. LCS Homes, Inc., Fountain Valley

   B. Roll-Away Mobile Homes, Torrance

2. Modular home
   A. LCS Homes, Inc., Fountain Valley

   B. Enterprise Management and Development, Newport Beach

3. Prefabricated units
   A. Model Log Homes, Wrightwood

4. Custom design and construction
   A. Prevailing area experience

It should be noted that LCS can construct both a mobile and modular unit, the difference being the type of construction and finishes (see page 44) and in addition, the alternate 3 and 4 plan can be a prefabricated unit (log cabin) or a custom designed unit.

On the basis of appearance and budget, Lidyoff/Hourian recommends that a modular unit be designed and constructed for the following reasons:

1. The structure is portable and can be relocated.
2. Interior floor plan is flexible.
3. Exterior finishes and elevation treatment would have a "custom" appearance.

Exhibit (5) Page 38 shows a typical floor plan for the modular and custom units.

It is our recommendation that a day use ranger station and informational station be established at the confluence of Aliso and Wood Canyon to greet visitors and monitor greenbelt activities. The ranger residence should remain in the general location of upper Wood Canyon to monitor night activities at the nearby campsites. This site is an excellent location for a command post in case of fire, see 4.8, Fire Protection Considerations.

Final determination to the actual location of the ranger residence will be made by the Orange County Environmental Management Agency, giving consideration to the following:

1. Staffing requirements.
2. Operation and maintenance of the greenbelt.
3. Requirements for emergency evacuation.
4. Long terms vs. short term in relation to the utilization of a structure type.
5. Corporation yard and equipment storage areas.
6. Capital expenditure budget for improvement.

Exhibit (6) Page 39 delineates the relationship of each proposed Ranger Residence site to the Greenbelt use areas.

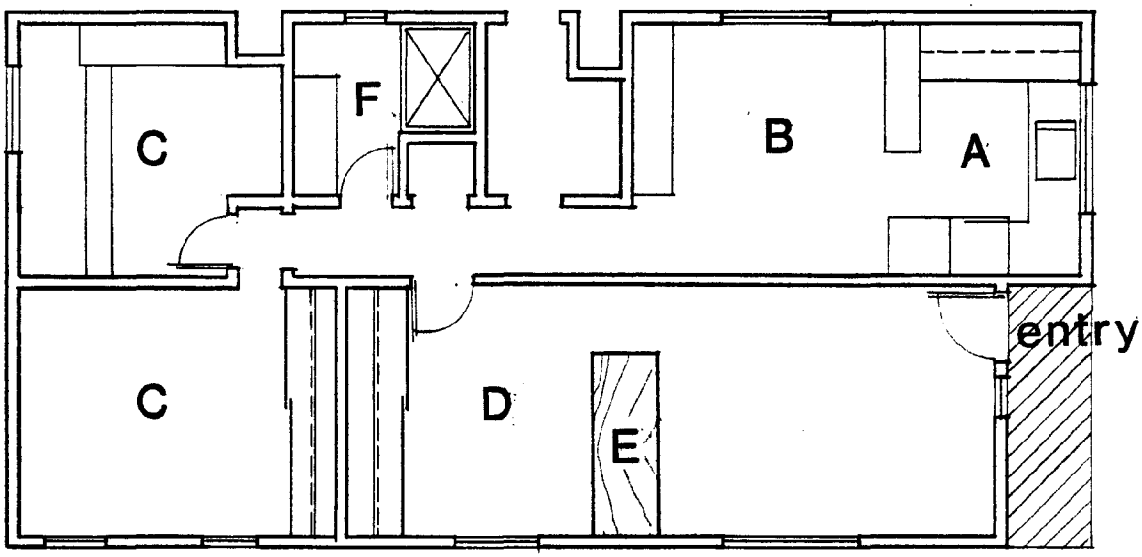

MOBILE/MODULAR PLAN (1,114 s.f.)

1/8" - 1'-0"

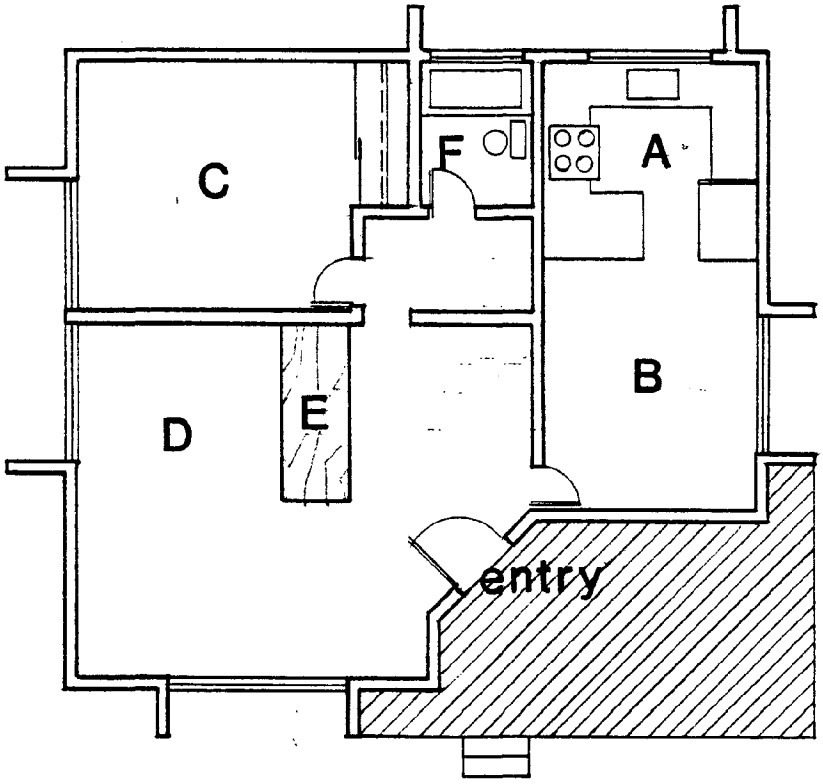

LEGEND

A. KITCHEN
B. DINING
C. BEDROOM
D. OFFICE
E. DESK
F. BATH

CUSTOM/PREFAB PLAN (750 s.f.)

1/8" - 1'-0"

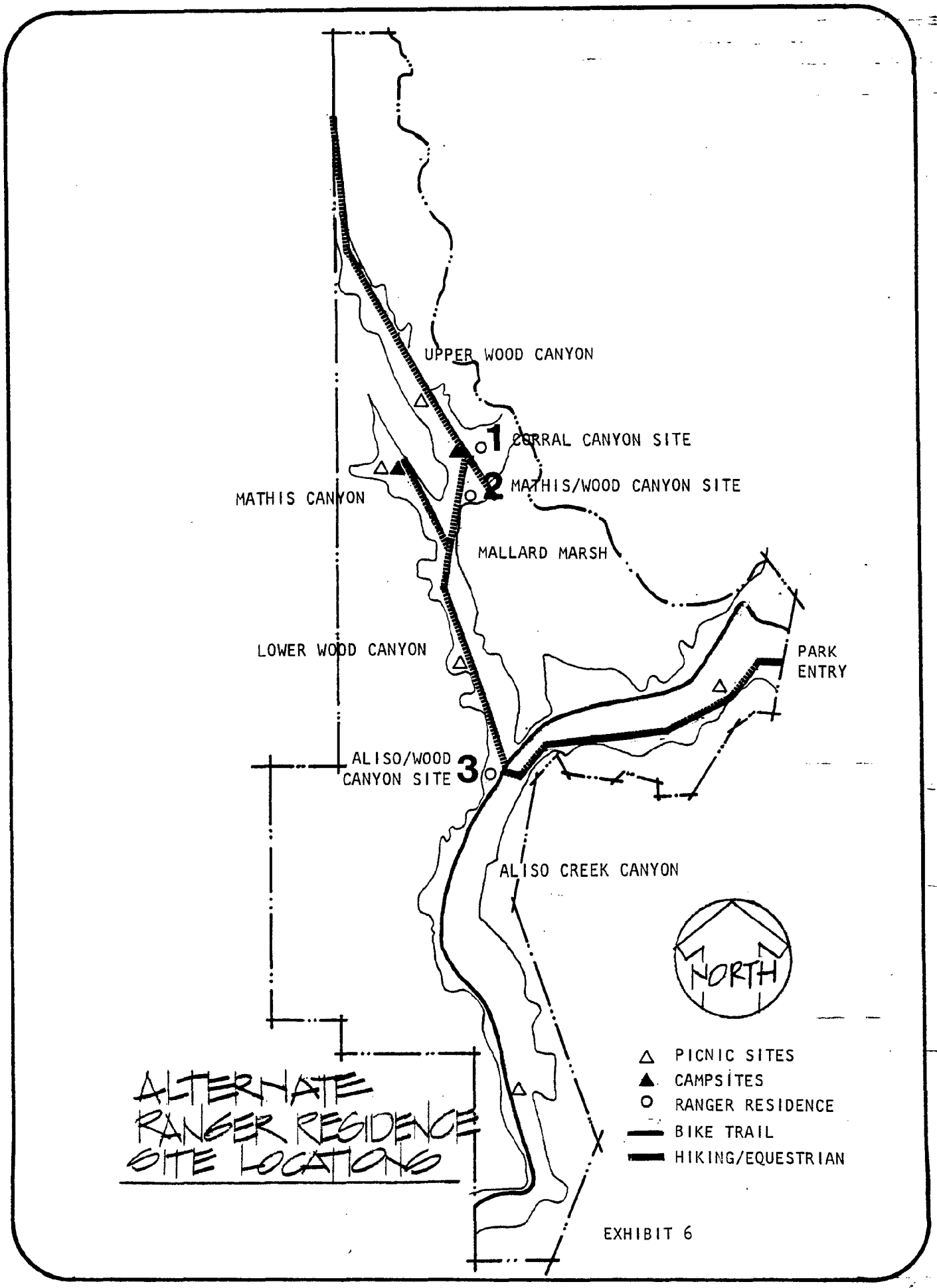
UPPER WOOD CANYON
1
CORRAL CANYON SITE
2
MATHIS/WOOD CANYON SITE
MATHIS CANYON
MALLARD MARSH
LOWER WOOD CANYON
PARK ENTRY
ALISO/WOOD CANYON SITE
3
ALISO CREEK CANYON
NORTH
PICNIC SITES
CAMPSITES
RANGER RESIDENCE
BIKE TRAIL
HIKING/EQUESTRIAN
ALTERNATE RANGER RESIDENCE SITE LOCATIONS

EXHIBIT 6

4.61 RANGER RESIDENCE SITE DESCRIPTIONS

In the early planning stages of the General Development Plan, alternate sites (2) and (3) were suggested as feasible in addition to the proposed Ranger Residence site (1) located in Corral Canyon as proposed in the Sanger Report. The final decision as to the location of the Ranger Residence will be determined by the County of Orange, EMA. Refer to Exhibit 6, Page 39 for site locations.

Following, are the evaluations of each site:

A. CORRAL CANYON SITE (SITE 1)

This site is located on level ground at the confluence of Corral and Wood Canyon. Directly across from the residence is the Wood Canyon campground and hiking/equestrian trail.

Siting the ranger residence at the mouth of Corral Canyon would be advantageous for the following reasons:

1. Previous reports on wells in the area indicate good drinking water would be available from a drilled well in the immediate vicinity.(4)

2. The location of nearby 66 KV transmission lines would minimize cost to deliver power to the residence. Step down transformers can be installed once the power reaches the site.

3. It would allow for supervision of upper Wood Canyon, and in the event of an emergency an attending ranger would be able to assist.

Disadvantages associated with the Corral Canyon ranger residence site:

1. This site has limited viewing distance for monitoring activities in lower Wood Canyon, adjoining Mathis Canyon, and Aliso Canyon.

2. Vehicular access to the site would be difficult during the rainy season.

(4) ALISO VIEJO FINAL E.I.R. VOL II JACK G. RAUB CO.

B. MATHIS/WOOD CANYON SITE (SITE 2)

Located on a slightly elevated terrace along the east side of the Wood Canyon Hiking/Equestrian Trail, this site is located directly opposite the Mathis Canyon/Wood Canyon confluence. Advantages for locating the residence at this site are as follows:

1. Provides for supervision of the Mathis Canyon/Wood Canyon picnic and campsites, due to overall peripheral view.

2. The resident ranger could monitor the amount of people entering and exiting the upper canyon areas.

3. The location of nearby transmission lines to deliver power to the site would be moderate in cost.

4. Reports on wells in the area indicate that good drinking water would be available from a drilled well in the immediate vicinity. (4)

Disadvantages associated with this site:

1. Vehicular access to the site would be difficult during the rainy season.

C. ALISO/WOOD CANYON SITE (SITE 3)

The ranger residence site is located at the confluence of Wood and Aliso Canyon along the west side of Wood Canyon, opposite the Hiking/Equestrian Trail. Advantages for locating the facilities at the confluence are as follows:

1. It would allow greater public accessability to informational and interpretive services by greenbelt personnel.

2. This site is more centrally located to provide supervision for recreational activities in both Wood Canyon and Aliso Creek Canyon.

3. It would permit supervised access and control in the use of Upper Wood Canyon; i.e. Wood Canyon above the ranger residence could be closed during the high fire hazard season, etc.

(4) ALISO VIEJO FINAL E.I.R. VOl II. JACK G. RAUB CO.

Disadvantages of siting the facilities at this location include the following:

1. Supervision and assistance in the event of an emergency could not be provided quickly due to the distance between ranger residence and upper canyon facilities.

2. Infrastructure (utilities) would not be as readily available on the short term (prior to the Aliso Viejo buildout) as it would in the upper canyon sites.

3. Because of the proximity of Aliso Creek, the ground water is highly mineralized and not suitable for drinking, therefore portable water would have to be trucked in periodically. (4)

(4) ALISO VIEJO FINAL EIR VOL II JACK G. RAUB CO.

COMPARISON CHART - ALISO VIEJO RANGER RESIDENCE

ALISO VIEJO, COUNTY OF ORANGE, CALIFORNIA

Square footage	1114	1114	750	750
	MOBILE HOME	MODULAR HOME	PREFABRICATED (Log Cabin)	CUSTOM
*INITIAL COST	$32,000 - $38,000	$41,000	$33,000 - $38,000	$40,000 - $60,000
MAINTENANCE	GOOD	GOOD	EXCELLENT	VARIABLE
DURABILTY	FAIR TO GOOD	GOOD	EXCELLENT	GOOD
LIVABILITY	GOOD	GOOD	GOOD	GOOD TO EXCELLENT
FLEXIBILITY	GOOD	GOOD	GOOD	GOOD
EXPANDIBILITY	GOOD	GOOD	GOOD	GOOD TO EXCELLENT
COMPATIBILITY WITH PARK ENVIRONMENTS	FAIR	FAIR TO GOOD	EXCELLENT	EXCELLENT

*The above costs do not include site preparation, which can vary from $5,000 to $10,000 depending on the design criteria and site location.

RANGER RESIDENCE

STRUCTURE COMPARISONS

	Alternate 1 Mobile	Alternate 2 Modular	Alternate 3 Prefab	Alternate 4 Custom
EXTERIOR FINISHES				
Masonite siding	X	X		
Wood logs			X	
Wood siding				X
Exterior plaster				X
ROOFING				
Asphalt shingle	X	X		
Built-up membrane				X(3)
Wood shingles			X(4)	X(3,4)
Fiberglass shingles				X(3)
FLOOR CONSTRUCTION				
Particle board	X			
Plywood sheathing		X	X(1)	X(1)
Concrete slab			X(1)	X(1)
WALL CONSTRUCTION				
Wood frame(2 x studs)	X	X		X
Wood logs, cured			X	
ROOF CONSTRUCTION				
Wood trusses	X	X		
Wood frame (2 x joists/rafters)			X	X

REMARKS

(1) Dependent on site conditions.
(2) Per local building code.
(3) Dependent on design parameters.
(4) Fire-retardent qualities, dependent on local codes, and ordinances.

RANGER RESIDENCE

STRUCTURE COMPARISONS

	Alternate 1 Mobile	Alternate 2 Modular	Alternate 3 Prefab	Alternate 4 Custom
PLUMBING				
Plastic piping	X			
Metal and plastic piping		X(2)	X(2)	X(2)
ELECTRICAL				
Aluminum wiring	X			
Copper wiring		X(2)	X(2)	X(2)
INTERIOR FINISHES				
Carpet/vinyl flooring	X	X		X
Vinyl wallcovering	X	X		
Painted wallboard	X	X		X
Wood logs, stained			X	
INTERIOR PARTITIONS				
All non-structural	X	X	X	
Structural/non-structural				X(3)

REMARKS

(1) Dependent on site conditions.
(2) Per local building code.
(3) Dependent on design parameters.
(4) Fire-retardent qualities, dependent on local codes, and ordinances.

4.7 UTILITY REQUIREMENTS

During the initial development of the Trail Systems, infrastructure would not be as readily available on the short term, prior to the Aliso Viejo Community buildout. The cost of utilities on site will be limited just to the ranger residence. A 66KV transmission line is located about one mile north of Corral Canyon and a temporary pole line could be constructed to bring power to the ranger residence. If costs prohibit the construction of a pole line, an alternate source of electricity could come from a gasoline or propane powered generator until a more permanent source of power is installed. In addition, each residence site is in a desirable location to implement solar collectors.

As housing development nears the greenbelt, lower costs to import utilities may make it desirable to bring infrastructure to the campground and picnic areas as part of an additional phase in the Aliso Greenbelt Development.

4.8 FIRE PROTECTION CONSIDERATIONS

Since the Aliso Viejo Greenbelt will remain in it's natural vegetative state, special fire considerations will be required. After discussions with the Orange County Fire Department regarding methods of response in case of a fire within the natural terrain, the following guidelines were proposed:

1. In the event of a fire, the ranger residence would act as a Fire Command Post.

2. Fire Tenders would take on water at the AWMA Plant and return to the confluence of Aliso and Wood Canyon to refill smaller 4WD firefighting vehicles. If a fire broke out north of Mallard Marsh, it would be doubtful that vehicles filled with water would be able to negotiate the marshland area. Alternative firefighting accesses to the canyons north of Mallard Marsh would be required. Access locations would depend on the degree and the location of the fire.

GENERAL DEVELOPMENT PLAN BUDGET

RECAP

PRELIMINARY COST ESTIMATE

I.	AWMA Bike Trail (3.36 miles).....	$ 215,300
II.	Equestrian Trail (4.04 miles).....	$ 5,600
III.	Camp (14 sites) and Picnic Sites (45 sites)...	$ 65,800
	TOTAL	$ 286,700

Ranger Residence	Structure	Utilities	Total Dollars
Alternate 1 (1114 SF)	$38,500	$27,500 to $39,500	$66,000 to $78,000
Alternate 2 (1114 SF)	$41,000	$27,500 to $39,500	$68,500 to $80,500
Alternate 3 (750 SF)	$38,000	$27,500 to $39,500	$65,500 to $77,500
Alternate 4 (750 SF)	$60,000	$27,500 to $39,500	$87,500 to $99,500
Building Site Preparation			$ 5,000 to $10,000

PRELIMINARY COST ESTIMATE

PICNIC AND OVERNIGHT CAMP AREAS

I.	MATHIS CANYON (GROUP PICNIC AND CAMPING)			
	1. Pad preparation/clearing	Allow	$ 5,000	
	2. Picnic tables	37 @ $400.00	14,800	
	3. Portable toilets	4	2,000	
	*4. Portable water (4 Hosebibbs)	Allow	5,000	
	5. Firepits	9 @ $500.00	4,500	
				$31,300.00
II.	WOOD CANYON CAMPSITE			
	1. Pad preparation	Allow	$ 2,000	
	2. Picnic tables	5 @ $400.00	2,000	
	*3. Portable water	Allow	2,000	
	4. Firepits	5 @ $300.00	1,500	
				$ 7,500.00
	*Assume well site at Corral Canyon.			
III.	UPPER WOOD CANYON PICNIC SITE			
	1. Pad preparation/clearing	Allow	$ 2,000	
	2. Picnic tables	10 @ $400.00	$ 4,000	
				$ 6,000.00
IV.	EQUESTRIAN PICNIC SITE			
	1. Pad preparation/clearing	Allow	$ 3,000	
	2. Water trough and hand operated pump	Allow	5,000	
	3. Picnic tables	10 @ $400.00	4,000	
				$12,000.00
V.	HORSESHOE BEND PICNIC SITE			
	1. Pad preparation/clearing	Allow	$ 1,000	
	2. Picnic tables	10 @ $400.00	4,000	
	3. Bike racks (20 spaces)	Allow	1,000	
				$ 6,000.00
VI.	CAVE ROCK PICNIC SITE			
	1. Pad preparation/clearing	Allow	$ 1,000	
	2. Picnic tables	5 @ $400.00	2,000	
				$ 3,000.00
			TOTAL	$65,800.00

PRELIMINARY COST ESTIMATE

AWMA ACCESS ROAD BIKEWAY

August 19, 1981

		Quantity		Unit Cost	Total
1.	Roadway Excavation (Includes 800 C.Y. Embankment	14,200 C.Y.	@	$ 4.00	$ 56,800
2.	3" Asphalt Concrete (including fine grade)	139,900 S.F.	@	.70	97,930
3.	6" Solid White Pain Stripe	17,740 L.F.	@	0.05	887
4.	48" CSP (Corrugated Steel Pipe)	4 L.F.	@	100.00	400
5.	42" CSP	12 L.F.	@	95.00	1,140
6.	12" CSP	58 L.F.	@	50.00	2,900
7.	58" x 36" CSPA (Corrugated Steel Pipe Arch)	14 L.F.	@	120.00	1,680
8.	50" x 31" CSPA	12 L.F.	@	110.00	1,320
9.	43" x 27" CSPA	60 L.F.	@	100.00	6,000
10.	29" x 18" CSPA	6 L.F.	@	75.00	450
11.	Extend Cattleguard 8'	4 ea.	@	2,500.00	10,000
12.	22' Wide x 5' High Chain Link Double Gate	1 ea.	@	500.00	500
13.	32' Wide x 5' High Chain Link Gate	2 ea.	@	750.00	1,500
14.	Relocate Barbed Wire Fence	1,140 L.F.	@	5.00	5,700
15.	Contingency 15%				28,100
		TOTAL ESTIMATED COST			$215,307

PRELIMINARY COST ESTIMATE

RANGER RESIDENCE UTILITIES

		Unit	Unit Cost	TOTAL COST AT ALTERNATE SITES: Corral Canyon (Site 1)	Alternate Site 2	Alternate Site 3
1.	Domestic water well	1 EA	10,000	10,000	10,000	10,000
2.	Electrical service	4,000 LF	4.50	18,000	18,000	*
***3.	Septic & leach sewage disposal system	1 EA	ALLOW	5,000	5,000	5,000
4.	Water distribution (Domestic)		ALLOW	2,000	2,000	2,000**
5.	Electrical distribution	200 LF	ALLOW	500	500	500
6.	Propane tank and distribution		ALLOW	4,000	4,000	4,000
*	Alternate Energy (Portable generator)	1 EA				6,000
	TOTAL			39,500	39,500	27,500

* Propane operated generator (5 kw, 10 hp). Fuel consumption is approximately 1-1/2 gallons per hour. Power would be used to generate electricity for night lights.

** Potable water would need to be trucked in because well water in the immediate vicinity is too high in "total desolved salts" for human consumption.

*** A more accurate estimate can be made if percolation tests were performed to determine exact length of leach line.

See Exhibit 6, Page 39 for site locations.

BIBLIOGRAPHY

BIBLIOGRAPHY

1. California Coastal Commission / State Coastal Conservancy Joint Staff Report. Standards and Recommendations for Coastal Access., Vol. 3, No. 6. October / November, 1980.

2. Lang and Wood Landscape Architects. Laguna Niguel Regional Park (Phase II Improvements), 1978.

3. Marsh, Karlin G. Biological Assessment Aliso Viejo Greenbelt Improvements, Trails, Picnic and Campsites, Ranger Residence, 1981.

4. Marsh, Karlin G. Aliso Viejo Addendum to Biological Assessment, 1981.

5. Orange County Environmental Agency. Aliso Creek Specific Plan (Concept), Santa, 1977.

6. Orange County Environmental Agency. Design Criteria and Guidelines for Orange County Bikeways, Santa Ana, 1977.

7. Raub, Jack G. Company. Aliso Viejo Final E.I.R. No. 088, Volume II, 1979.

8. Raub, Jack G. Company. Archaelogical Report, Vol. I, 1978.

9. Sanger, John M., Associates, Inc. Aliso Greenbelt Management Program, 1979.

10. State Coastal Conservancy. Aliso Watershed, File No.: 78-47, 1979.

11. U.C. Irvine:Aliso Creek Study Team. Aliso Creek-Forest to the Sea, Irvine, 1973.

Lidyoff/Hourian would like to thank the following for their help in developing this report.

CALIFORNIA STATE COASTAL CONSERVANCY
COUNTY OF ORANGE ENVIRONMENTAL MANAGEMENT AGENCY
COUNTY OF ORANGE OPEN SPACE RECREATION
JACK G. RAUB CO.
KARLIN MARSH, BIOLOGIST
LEDERMANN & ASSOC., ARCHITECT
MISSION VIEJO CO.
SHALLOR & LOHR, CIVIL ENGINEERS

BIOLOGICAL ASSESSMENTS

ALISO VIEJO PUBLIC FACILITIES

BIOLOGICAL ASSESSMENT

REPORT

PREPARED FOR

LIDYOFF/HOURIAN
Landscape Architecture and Planning
777 South Main Street, Suite 170
Orange, California 92668

BY

KARLIN MARSH
Biological Consultant

September 1981

Table of Contents

1.0 INTRODUCTION 1

1.1 PURPOSE AND SCOPE OF STUDY 1
1.2 PHYSICAL SETTING; REGIONAL AESTHETICS 2
1.3 METHODS 2

2.0 SITE DESCRIPTION, CONSTRAINTS ANALYSIS AND MITIGATION RECOMMENDATIONS 4

2.1 PICNIC SITES 4
2.1.1 Equestrian Picnic Area, Aliso Creek 4
2.1.2 Aliso Creek Big Bend 7
2.1.3 Dripping Cave Canyon - Mallard Marsh 11
2.1.4 Mathis Canyon 17
2.1.5 Upper Wood Canyon 21

2.2 CAMP SITES 25
2.2.1 Mathis Canyon 25
2.2.2 Wood-Corral Canyon Confluence 28
2.2.3 Moulton Meadows 30

2.3 RANGER RESIDENCE 35

2.4 TRAILS 36
2.4.1 AWMA Road 36
2.4.2 Aliso Creek Equestrian Trail 39
2.4.3 Wood Canyon Trail and North Link 41

3.0 REFERENCES CITED 42

4.0 FLORA AND FAUNA SPECIES INVENTORY 44
4.1 FLORA 44
4.2 FAUNA 67

1.0 INTRODUCTION

1.1 PURPOSE AND SCOPE OF STUDY

This report contains biological assessments, constraints, analyses and development recommendations for six proposed picnic areas, two overnight campsites, one day-camp site, a ranger residence and three trails within the Aliso Viejo Planned Community Greenbelt.

Biological assessments include inventories of flora and fauna species present evaluation of each site's habitat potential, spatial relation of proposed development areas to local or regional wildlife pathways and description of approximate location of tree specimens within or adjacent to each site or trail.

Biological constraints considered include possible impact on tree specimens within or in the vicinity of recreational development sites, potential disruption of wildlife habitats or dispersion corridors, and disturbance or destruction of disjunct, rare or endangered plant species populations and sensitive vegetational communities.

Hydrological constraints are also considered. These include active meander erosion, which may potentially impact trails or recreation sites, stream bank undercutting and sloughing in the vicinity of facilities and recreation sites located in areas found to be seasonally marshy.

Safety constraints considered include the location of recreational facilities in high fire hazard areas or near dangerously steep and/or undercut stream terrace edges.

1.2 PHYSICAL SETTING; REGIONAL AESTHETICS

The Aliso Viejo Greenbelt is located south and west of the Aliso Viejo Planned Community, in Township 7 South[1] Range 8 west of the San Juan Capistrano and Laguna Beach 7.5 min. U.S.G.S. Quadrangles, Orange County, California.

The bulk of the greenbelt lies within the Aliso Creek watershed, which includes, in addition to this stream, Wood Canyon and its tributaries, Mathis Canyon and Corral Canyon. A very minor portion of the greenbelt is within the Bluebird Canyon watershed.

The visual setting of the greenbelt is dominated by the expansive grassy Aliso Creek Valley, the narrower, forested and brushy setting of Wood Canyon, and flanking uplands, including the Sheep Hills which separates the two drainages, Niguel Hill to the east and the Moulton Meadows-Top of the World ridgeline to the west. Among the visual resources of the site are areas of exposed rock formations, particularly within the Wood Canyon watershed and on the western slopeland above lower Aliso Creek. Outstanding views of the greenbelt are provided from its Moulton Meadows ridgeline area. The greenbelt is also visible from the ridge of the Sheep Hills, from Aliso Peak and from development areas on ridgelines to the east and west.

1.3 METHODS

On July 8, 9, 10 and 16, 1981, approximately 36 hours were spent conducting field surveys of the proposed camping, picnic, residence and trail facilities within the Aliso Viejo Greenbelt. The author was assisted by Gordon A. Marsh, Director, Museum of Systematic Biology, U.C. Irvine; by Bruce Cashen, Urban Planner, Jack G. Raub Company and by

[1] A very small portion at the mouth of Aliso Creek is located in township 8 S.

Phillip Vander Toolen, Project Manager, Liddyhoff-Hurian.

All proposed recreational facilities enumerated above were subject to walkover survey. Adjacent secondary impact areas were also surveyed. Biotic communities, the approximate location of tree specimens and of disjunct, rare or endangered plant species populations and wildlife habitats and corridors in the immediate vicinity of each facility were mapped in the field. This information was integrated with regional mapping, prepared from 800 scale and 2,000 scale color aerials provided by Jack G. Raub Co. All plant and animal species detected during field surveys were inventoried. Secretive, nocturnal or seasonal fauna not detected are included in the species list if they are known from similar appropriate habitats in the coastal Orange County region or are reported by England and Nelson, 1977.

It must be emphasized that the field surveys and following report examine only those lands included within the boundaries of Aliso Viejo. Certain parcels under separate ownership which contain connector road or track routes have not been surveyed and were not included within the scope of work.

2.0 SITE DESCRIPTION, CONSTRAINTS ANALYSIS AND MITIGATION RECOMMENDATIONS

2.1 PICNIC SITES

2.1.1 Equestrian Picnic Area, Aliso Creek -

The equestrian use picnic area is located near the north east end of the greenbelt, on the east bank of Aliso Creek. The site is located on a level stream bench vegetated by a mix of disturbed, introduced grassland and successional, disturbed coastal sage scrub. The area is presently used as grazing land for cattle. Access to the site is available from a farm road on the east terrace of Aliso Creek; this pathway is the designated location of an equestrian trail. A proposed equestrian staging area is located on the west bank of the creek a short distance to the north. Prevailing on-shore winds should ameliorate odors generated by this equestrian facility by drawing them away from the picnic area.

Flora

Flora of the stream bench at the proposed picnic site consists mainly of the following species:

- .coastal goldenbush (*Haplopappus venetus*)
- .grasses, such as ripgut brome (*Bromus diandrus*), soft chess (*B. mollis*) foxtail (*Hordeum leporinum*) and wild rye (*Lolium multiflorum* ssp. *perenne*).
- .ruderals such as summer mustard (*Brassica geniculata*), telegraph weed (*Heterotheca grandiflora*), black mustard (*B. nigra*), bur clover (*Medicago hispida*), white stemmed filaree (*Erodium moschatum*) dove weed (*Eremocarpus setigerus*) and others.

The shores of Aliso Creek to the east contain sandy "beach" areas presently vegetated by such species as tree tobacco (*Nicotiana glauca*), castor bean (*Ricinus communis*), grant reed (*Arundo donax*), tall stephenomeria (*Stephenomeria exigua*), prickly ragweed

(Ambrosia acanthicarpa), wild gourd (Curcubita foetidissima), Mexican tea (Chenopodium ambrosioides), lamb's quarter (C. album), fennel (Foeniculum vulgare), etc.

Creek bank areas are not wooded in the vicinity of the picnic area, though a dense stand of willows (Salix spp.) is located upstream, in the vicinity of the equestrian staging area, and a stand of Mexican elderberry (Sambucus mexicana) and some willows and mulefat (Baccharis glutinosa) grows a short distance downstream. The open creek banks near the picnic area contain saltgrass (Distichlis spicata) and yerba mansa (Anemopsis californica), both salinity/alkalinity indicator species. Intermixed with these dominants are such herbs as alkali heliotrope (Heliotropium curassavicum), western ragweed (Ambrosia psilostachya), common cocklebur (Xanthium strumarium), white sweetclover (Melilotus albus), bristly oxtongue (Picris echioides), curley dock (Rumey crispus) and wild radish (Raphanus sativus). The moist stream margin contains in addition, celery (Apium graveolens), spear orache (Atriplex patula var. hastata), mayweed (anthemis cotula) Spanish sunflower (Pulicaria hispanica) brass buttons (Cotula coronopifolia). Rabbitsfoot grass (Polypagon monospeliensis), scarlet pimpernel (Anagallis arvensis) and fluellin (Kicksia elatine).

Most of the creek channel is overgrown with Olney's bulrush (Scirpus olneyi). Minor amounts of willowweed (Polygonum lapathifolium) and watercress (Rorippa nasturtium-aquaticum), also occur in the channel. An attractive small waterfall is located a short distance downstream from the picnic area.

Fauna[1]

The most significant fauna inhabiting the area are two species of heron, the great blue, National Audubon Blue-Listed species (Tate, 1981), and the green. Several individuals of each species were observed flying along the creek from the upstream willow grove to the downstream elderberries. Their principal roost area appears to be in the willows. The herons hunt the creek for frogs and other aquatic fauna. Both bullfrogs (*Rana catesbeiana*) and Pacific tree frogs (*Hyla regilla*) were observed in the reach.

A large coyote (*Canis latrans*) den was found on the creek bank. Other mammals detected include pocket gophers (*Thomomys bottae*) and Audubon cottontail rabbits (*Sylvilagus audubonii*). The grassy creek margin should be an excellent habit for harvest mice (*Reithrodontomys megalotis*). Some ground squirrels (*Citellus beecheyi*) and black-tailed hares (*Lepus californicus*) probably pass through the upland, and raccoons (*Procyon lotot*) and possibly masked weasels (*Mustelea frenata*) hunt along the creek edge.

Beside the herons, birds seen on the site include meadowlarks, mockingbirds, house finches, song sparrows, cliff swallows, Anna's hummingbirds and, near the elderberry stand, a red-shouldered hawk. The latter species is Blue-Listed by the National Audubon Society and forages principally on smaller birds.

[1] Because bird species are well-known to most readers, scientific names are not given in text. They are listed in the Fauna Species List (section 3).

Constraints

The principal biological impact predicted by picnic ground construction and use will be disturbance of the great blue and green herons foraging along the creek and resting in the willow grove upstream. Construction of the equestrian staging area in the vicinity of the grove would, of course, have a major impact on its future potential as a resting place or potential nesting site.

An additional impact predicted is the disturbance of stream bank and margin vegetation and habitat by equestrian and pedestrian trampling.

Mitigations

Human use and the continuance of inhabitation of the area by herons (and hawks) may be incompatible. However, a vegetative screen of California sycamore (*Platanus racemosa*), willows (*Salix lasiolepis*, *S. gooddingii*) and other native riparian trees and shrubs would protect the creek inhabitants from visual disturbance within the picnic ground above, and provide a visual amenity presently lacking on the site. An equestrian pathway should be established across the creek if the staging area is located on the other side. Equestrian incursion should be prohibited from the remainder of the riparian zone. Foot trails should be established to allow enjoyment of amenities such as the sand beach and waterfalls along the stream course, and signing placed in other areas to discourage off-trail trampling.

2.1.2 Aliso Creek Big Bend -

This lower Aliso Creek picnic site is actually located one full meander south of Big Bend. The site is generally level. Its southern

portion contains imported fill. An attractive sandy beach is located along the south shore of the meander-outlined terrance.

Flora

About half of the site contains coastal goldenbush scrub, indicating a high subsurface water table regimen suitable for maintenance of planted sycamore trees. The goldenbush scrub zone lies in the north and east portions of the site. Associated species within the goldenbush scrub are summer mustard, common cocklebur, ripgut brome (Bromus diandrus), soft chess, windmill pink (Silene gallica), bur clover, western ragweed, common wild oats (Avena fatua) and saltgrass.

The southern and western portions of the picnic site contain a disturbed ruderal-dominated vegetative association. Outside of the fill zone, summer mustard in the most common plant species, occuring along wih the Eurasian grasses enumerated above and with London rocket (Sisymbrium irio), wild gourd and doveweed. The fill zone contains a variety of herbs and numbers of tree tobacco seedlings. Jimson weed (Datura meteloides), nightshade (Solanium sp), telegraph weed, Russian thistle (Salsola iberica), prostrate tumbleweed (Amaranthus blitoides), cheeseweed (Malva parviflora), milk thistle (Silybum marianum), tomato (Lycopersicon esculentum) and foxtail fiscus (Fescue megalura) are among the herbs, weeds and grasses found on the fill.

East of the level picnic site is the meandering channel of Aliso Creek. On the stream terrace edge above the creek are a line of mulefat

shrubs which extend along the northern two thirds of the meander. Between the terrace edge and the wet stream margin is a saline-alkaline zone dominated by yerba mansa and salt grass. White sweet clover, western ragweed, common cocklebur, birdsfoot trefoil (Lotus crassifolius), grant rye (Elymus condensatus), Spanish sunflower, bull thistle (Cirsium vulgare), Mexican tea, mayweed, curly dock, mugwort and creek nettles (Urtica holosericea) are other plants occuring in the riparian zone, particularly southward beyond the line of mulefat shrubs. Stunted, cropped individuals of willow shrubs are of occasional occurrence.

The water-edge wet zone is vegetated by knotgrass (Paspalum distichum), Olney's bulrush, celery, rabbitsfoot grass, kikuyu grass (Pennisetum clandestinum), watercress and cattails. Hornwort (Ceratophyllum demersum) and algae species occur in the creek itself.

Fauna

Ground squirrel den holes are abundant in the disturbed ruderal area of the site. Harvest mice probably occupy goldenbush scrub and mulefat brush habitats. Audubon's cottontails were seen near the property and are undoubtedly common here. Raccoons and possible masked weasels and other mammals probably frequent the stream edge habitat, though tracks were obliterated by cattle. Birds seen during the brief field survey include house finches, song sparrows and a black phoebe. Other kinds, particularly shore birds such as killdeers, are expected. In the general vicinity, loggerhead shrikes, roadrunners, mourning doves, bushtits and brown towhees were observed. The expansive lower

Aliso Creek Valley also harbors ravens, red-tailed hawks and at least one (immature) golden eagle.

A western rattlesnake (Crotalus viridis helleri) was observed on or near the project site during a previous survey. Other reptiles expected include western fence lizards (Sceloporus occidentalis) and sideblotch lizards (Uta stansburiana). The skin of a common kingsnake (Lampropeltis getulus) was found in goldenbush scrub on the big bend meander, immediately to the north, and the species undoubtedly occurs here also. Western tree frogs are expected to inhabit the aquatic edge environment.

Constraints

The site has minimal biological constraints. The most sensitive areas are the mulefat and yerba mansa-saltgrass zones along the riparian edge. Neither of these is unique to the site. A health constraint exists due to the location on the site, of an attractive sandy beach adjacent to a creek which may not contain water of adequate quality for bathing or wading. While the creek was very shallow during the midsummer survey period, dangerous quicksand bars could conceivably exist along its broad course in the vicinity of the beach.

Mitigations

Several trails could be established to the creek edge in the mulefat and yerba mansa saltgrass zones, and off trail trampling discouraged by signing.

With respect to use of the beach and the recreational amenity of the creek, the County or its designee has several options. Questions to

be answered include the following.

- Is the quality of water adequate for wading or bathing?
- Is the creek in the vicinity of the beach free from quicksand bars or other safety hazards? Do such hazards occur upstream or downstream?

If water quality and streambed conditions warrant supervised or unsupervised wading or bathing activities may or may not be appropriate, based on legal liability of the picnic ground operator. If for any reason the creek is found to be unsuitable for water contact activities, signing and supervision of the site will be necessary, as the area is an attractive locale for such use.

2.1.3 Dripping Cave Canyon - Mallard Marsh -

This picnic area is located on the floor of Dripping Cave Canyon, a lateral of Wood Canyon, above its confluence, at Mallard Marsh. The headwater of this drainage is located near the margin of Top of the World. Upstream from the picnic area, the canyon contains heavy chaparral brush and coast live oak (*Quercus agrifolia*) woodland along wih many rock outcrops and a grotto called Dripping Springs Cave.

Flora

The site of the picnic area is fairly level and contains a dense growth of costal goldenbush scrub, indicating that a fairly shallow water table is present. Intermixed wih the scrub are grassy patches vegetated by ripgut brome, soft chess, western ragweed, summer mustard, black mustard, slender wild oats (*Avena barbata*), telegraph weed, horehound (*Marrubrum vulgare*) and California cudweed (*Onaphalium californicum*).

The slope south of the canyon bottom contains a grassland dominated

by wild oats (Avena ssp). The slope to the north contains coastal sage scrub. This community is a mosaic of nonwoody shrubs such as California sagebrush (Artemisia californica), black sage (Salvia mellifera) white sage (S. apiana - mostly at the margin between canyon bottom and slope), California buckwheat (Eriogonum fasciculatum), deerweed (Lotus scoparius) and chaparral bedstraw (Galium angustifolium). Also found here are two cacti, coast cholla (Opuntia prolifera) and western prickly pear (O. "occidentalis" hybrid) and woody shrubs such as toyon (Heteromeles arbutifolia), lemonadeberry (Rhus integrifolia), laurel sumac (Malosma laurina) and Mexican elderberry.

Several coast live oaks are distributed on the margins of the picnic area. Two are in the lower drainage bottom, two on the south slope and one on the north slope. Several oaks in the narrow draw above are visible from the lower floor.

The upper part of the drainage course in the picnic area is deeply incised, and contains flanking arroyo willows (Salix lasiolepis), coastal sage scrub elements, blackberry vines (Rubus ursinus) and spike rushes (Eleocharis cf. montevidensis) in the bottom.

As the canyon above the picnic site narrows, it becomes increasingly rugged, with many large rock outcrops and a cave. Some of the outcrops contain at their margins, small populations of the rare and endangered,[1] many-stemmed dudleya (Dudleya multicaulis).

Other examples of rock outcrop margin flora here are spike moss (Selaginella Gigelovii), bentgrass (Agrostis diegoensis),

[1] California Native Plant Society, Smithsonian Institute designations.

Nuttall's snapdragon (Antirrhinum nuttallianum), coffee fern (Pellaea andromediaefolia), sticky monkeyflower (Mimulus aurantiacus),glandular cudweed (Corethrogyne filaginifolia), blue wool stars (Eriastrum sapphirinum), rattlesnake spurge (Euphorbia albomarginata), bicolord cudweed (Gnaphalium bicolor), goldentop grass (Lamarckia aurea) and two additional Dudleya species, Chalk lettuce (D. pulverulenta) and desert savior (D. lanceolata).

At the margins of and within the shade of oak groves, poison oak (Toxicodendron radicans ssp. diversilobum), purple needlegrass (Stipa pulchra), fuchsia-flowed gooseberry shrubs (Ribes speciosum), elongate buckwheat (Eriogonum elongatum), fleabane (Erigeron foliosus) and rosin weed (Calycadenia tenella) were found.

A small seep area up in the canyon supports a lush growth of polypody (Polypodium californicum) and maidenhair (Adiantum jordani) ferns. This remaining fern growth is upstream from the "dripping cave" described by Olmsted, 1978, and by Jones and Stokes, 1978. Intervening dry years and the midsummer drought have combined to make the mesic potential of the upper canyon less obvious during the latest survey.

Native grasslands are found on slopes overlooking the upper canyon. California cismontane native grassland is considered a sensitve plant community.[1] It is dominated by purple needlegrass and contains a variety of vernal wildflower species.

In the opposite direction from the botanical resources inventoried above, at the mouth of the lateral is a freshwater marsh containing a

[1] Holstein, 1981. The community is also called California steppe grassland (Kuchler, 1964)

small pond overgrown by emergent monocots. Known as Mallard Marsh, it contains zonation bands of vegetation toward the water's edge.

Transitional from the goldenbush scrub to the marshland is a green meadow dominated by bermuda grass (Cynodon dactylon) and saltgrass. Rabbitsfoot grass, common cocklebur, curly dock, alkali heliotrope and common plantain (Plantago major) are found in this zone.

Closer to the water, increasing amounts of yerba mansa, celery, bristly oxtongue and western ragweed grow in the saltgrass matrix. Near the pond are thickets of creek nettles, poinson hemlock (Conium maculatum) and bull thistle. Other marsh-edge areas are occupied by rush swales dominated by wire rush (Juncus balticus) and (or) Mexican rush (J. mexicanus), spike rush, etc.

Marsh fleabane (Pluchea purpurascens) grows at the water edge. Emergents in the water include Olney's bulrush and common cattail (Typha latifolia)[1].

Fauna

The upper canyon with its dense cover and rock outcrops is very likely an excellent fauna habitat. The marsh below is presently overgrown by cattails and Olney's backrush, lessening its value for waterfowl; however, it functions as a valuable habitat for other water-dependent bird species.

Fauna observed in the vicinity of the picnic area included turkey vultures, ravens which were nesting in cliffs opposite the canyon, western kingbirds, California thrashers, cliff swallows, ash-throated flycathcers and California quail. Observed at Mallard Marsh were

Pacific tree frogs, yellowthroats, red-winged blackbirds and long-billed marsh wrens.

The immediate goldenbush scrub area within the picnic ground impact zone is probably inhabited by harvest mice and white footed deer mice (Peromyscus maniculatis), Audubon cottontail rabbits and other small mammals. The brushy canyon above is expected to contain a variety of amphibians, reptiles, birds and mammals, inventoried in the species list. Mallard marsh may be periodically inhabited by coots and various duck species, though the amount of open water for swimming is very limited. (Relaxation of grazing is probably contributing to the excessive overgrowth of emergent plants since the 1978 surveys by Jones and Stokes and Olmsted).

Several species of herons, common snipe, sora rails and other marsh bird species probably inhabit the marshland, at least periodically. The marsh is a potential locality for the red-legged frog (Rana ayrora), a sensitive amphibian species[1] and the two striped garter snake (Thomomys couchi ssp. hammodi), a sensitive reptile species[1].

Constraints

Biological constraints related to the Dripping Cave Canyon Picnic Area relate to its proximity to sensitive biotic resources in the canyon above, including mesic grotto flora, populations of a rare and endangered plant species, and excellent faunal habitat. Mallard Marsh, at the mouth of the canyon is a habitat which would be potentially impacted by human overuse.

Safety constraints include the location of the picnic ground in a high brush fire hazard area and the attractiveness of potentially dangerous rugged rock formations in the canyon above.

[1] Csute, 1980.

Mitagations

Establishment of safe trail routes and signing to discourage off-trail use may enable visitors to enjoy the amenities of nearby geologic formations and the sensitive vegetational assemblages present. This picnic area, wih valuable resources located immediately to the east and west, is an appropriate site for environmental interpretation programs, both active (manned) and passive(signed). Because the area is closed to vehicular use, users would be already motivationally pre-selected and less likely to participate in acts of vandalism against natural features or passive intrpretive amenities.

Mallard Marsh should be managed, to control invasive emergent aquatic growth of cattails and bulrushes and preserve open water areas for migrational waterfowl. Hydrological impacts to the marsh related to movement downstream of the downcut zone in Wood Canyon, as discussed by Olmsted, 1978, should be mitigated. Bird observation platforms and/or blinds would be a desirable amenity at the pond edge. A series of trails should be established to provide nature study access; equestrian use of such trails should be prohibited. At least one side of the marsh should be closed to access of any kind to protect waterbird nesting habitats and dens of reparian associated mammal species such as raccoons and masked weasels.

2.1.4 Mathis Canyon -

Of all the locales within the Aliso Viejo Greenbelt, the Mathis Canyon watershed is one of the most biologically valuable and potentially sensitive to human impact. It is especially important to consider secondary use zone impacts both here, at Dripping Cave Canyon Picnic ground and atop Moulton Meadows.

The Mathis Canyon picnic site is located on the level canyon floor in the vicinity of the confluence of its north and south branch. The poliy advocated by Olmsted, 1978, encouraged the selection of a site in the open, rather than beneath the attractive old sycamores in the south branch, to prevent impact on those valuable specimens.

Flora

The designated picnic site is vegetated by introduced grassland dominated by wild oats and ripgut brome, and additionally containing soft chess, coastal goldenbush, western ragweed, coyote melon and jimson weed.

The sycamore grove west of the designated site contains, in addition to California sycamore, arborescent Mexican elderberry shrubs and an understory of ripgut brome, mugwort, western ragweed, coastal goldenbush and creek nettles.

The slopes of the canyon just below the confluence contain coastal sage scrub on the south exposure and southern oak woodland on the north exposure. The north-facing slope oak woodland contains in addition to coast live oak, toyon, holly-leaved redberry (Rhamnus ilicifolia), lemonadeberry, Mexican elderberry, fuchsia-flowering gooseberry and sticky monkeyflower. The south-facing slope coastal sage scrub contains characteristic associates, wih dominance by black sage and an admixture

of California sagebrush, California buckwheat, California encelia (Encelia californica), bush mallow (Malocothamnus fasciculatus), giant rye, lemonadeberry and holly-leaved redberry.

The south fork of Mathis Canyon above the picnic ground contains extensive and mesic oak woodlands. The canyon forks at least twice again upstream. The right, or north of these subforks was informally surveyed several years prior,and found to contain a lush understory of herbs and ferns. A south branch of the right fork contains the southern-most populations in the world of pitcher sage (Salvia spathacea)[1]. A population of many stemmed dudleya was found in an outcrop zone on the south ridge of the main canyon. An unusual stolonating form of desert savior also occurs here.

Native grassland vegetates slopes south of the lower canyon floor. Dominated by purple needlegrass, the grassland contains golden stars (Bloomeria crocea), wild hyacinth (Dichelostemma pulchella) and other spring wildflowers.

Fauna

The oak woodland, chaparral, coastal sage scrub and grassland communities wihin this watershed provide a habitat mosaic highly valuable for a variety of fauna species.

Among the large mammals, mule deer (Odocoileus hemionus) definitely traverse the north branch of Mathis Canyon, as discussed in Sec 2.2.1. Bobcats (Lynx rufus) have been observed and at least one captured in the south branch[2] Skunks (Mephitis methitis, Spilogale gracilis), opossums (Didelphis virginiana), raccoons,

[1] Not to be confused with Lepechinia species, also call pitcher sages.

[2] Richard Frost, personal communication, May 1977.

coyotes (Canis latrans) and other medium sized mammals undoubtedly range through these canyons. Small mammals expected include white-footed deer mice, Caliornia deer mice (Peromyscus californicus), dusky-footed woodrats (Neotoma fuscipes) and others. Grasslands on the lower canyon floor will support populations of Caliornia vole (Microtus californicus).

Birds observed on the floor of the canyon during the brief survey period include ash-throated flycatchers, phainopeplas, mourning doves, Anna's and possible Allen's hummingbirds, and scrub jays. Many additional species are expected, as enumerated in the species list. A great horned owl nesting site is located in a lateral arrayo south of the picnic area.

Some reptiles, including rattlesnakes are expected, as are several amphibian species. These, too, are enumerated in the species list.

Constraints

Biological constraints include prtection of the populations of pitcher sage and many-stemmed dudleya near the site, as well as fragile mesic oak woodland flora and attractive sycamore stands. Habitat protection in the upper reaches of Mathis Canyon is an additional concern.

Safety constraints include the location of the picnic (and nearby camping) facility in a high fire hazard area.

Mitigations

The standard mitigation applied to previous sites: i.e., establishment of trails, prohibition of off-trail use combined with

passive and active environmental interpretation, may help to protect sensitive up canyon habitats in Mathis Canyon. Any nature study trails within the canyon should be barred from equestrian use.

If picnic facilities are established within the south branch sycamore grove, contrary to the recommendations of Olmsted, 1978, such facilities should cosist of portable eequipment and the use of the grove should be on a periodic rotation, with intermittant rest periods equalling periods of use. This will permit rejuvination of soil around tree bases wih organic material from leaf drop, encouraging the proliferation of soil organisms which stimulate aeriation and recovery from compaction. Additional sycamores, coast live oaks and other locally indiginous tree and shrub species should be planted in the designated picnic area. This site should be used at least on a rotational basis wih the grove above. If the mature, existing grove is selected as a picnic area, tables and oher amenities should be physically sited on the ground in the presence of a biologist or horticulturalist familiar with California sycamore physiology, and the locales most likely to cause impact to these trees, through root compaction, etc., should not be selected.

The picnic ground and adjacent camp ground may of necessity need to be closed to public use during the high fire hazard, late summer and fall months. An open use would necessitate the maintenance of an irrigated turf area at this and other picnic sites, multiple exit routes from Wood Canyon and vigorously enforced no smoking regulations except in irrigated areas. During Santa Ana wind ("red flag alert") conditions, Wood Canyon should in any event, be closed to all use.

2.1.5 Upper Wood Canyon -

This picnic site is located on a level stream bench between the existing farm road and the creek, which is deeply downcut, with precipitous vertical and undercut banks. The designated picnic area is south of the big sycamore stand on the floor of Wood Canyon, and was located here rather than in the stand because of the recommendations of Olmsted and other analysts.

Flora

The site consists of a grassy meadow with a backdrop of coast live oaks, black willows and elderberry bushes along and near the creek. The meadow area contains characteristic introduced grassland plants. Wild oats species dominate. Wild gourd, telegraph weed, summer mustard and doveweed are characteristic forbs. Other grasses include foxtail and ripgut brome.

Thicket stands of elderberry shrubs grow away from the stream edge and from the site on the north. Tree tobacco and western prickly pear patches are associated with these stands, which are an excellent avian habitat.

Most of the oak trees grow on the west side of the downcut creek channel. Black willows, mulefat, bush mallow shrubs and nettles also grow along the channel. The large sycamore stand is visible up the creek.

Slopes to the east are covered by characteristic coastal sage scrub. Attractive rock outcroppings exist in laterals entering Wood Canyon from the east. Plant species about these outcrops include branching phacelia (Phacelia cf. ramosissima), bricklebush (Brickellia californica),Nuttall's snapdragon, wishbone bush (Mirabilis californica), California fuchsia (Zauchsneria californica), smallheaded cudweed (Gnaphalium microcephalum), bicolored cudweed and goldentop grass. Not all outcrops were inspected. Some may contain populations of many stemmed dudleya or of the rare endemic, Orange County turkish rugging (Chorizanthe staticoides ssp. chrysacantha)

Fauna

The elderberry stands and riparian and oak woodland along the creek are excellent avifaunal habitats attracting a large population of birds into the area. Despite the unsuitable mid-day inspection time, numbers of phainopeplas, house wren, cactus wrens, Allen's hummingbirds, nesting lark sparrows and mockingbirds were seen. Turkey vultures soared overhead and California quail were heard from nearby brushy sopes. Mammals detected in the area included mule deer, coyotes, raccoons, ground squirrels and pocket gophers. A variety of amphibians, reptiles, more secretive mammals and migratory birds are expected and are enumerated in the appendix. The larger area which includes the sycamore stand is an especially important locality for tree-hole nesting bird species, including several sensitive songbirds and owls.

Constraints

The most sensitive biological resource within the designated picnic area is its songbird habitat. Human overuse of the area could drive its avian occupants to other less suitable habitats. Overuse is not expected at this time, but could be predicted with full buildout of Aliso Viejo.

If the sycamore stand north of the designated site is selected contrary to the recommendations of Olmsted and other analysts, substantial impact can be predicted for that habitat.

Potentially sensitive rock outcrop zones in the area exist a sufficient distance from the picnic site so that the major impacts predictable from uncontrolled scrambling would be somewhat ameliorated.

Safety constraints include the presence of an extremely hazardous creek margin which is not obvious until one is upon it. Active downcutting has left sheer vertical walls which will continue to slough, with unstable and undercut terrace margins.

As discussed in the previous section, the high dry season brush fire potential of the area is an additional constraint detracting from the suitabiliy of the site.

Mitigations

Physical siting of picnic facilities on the ground in the presence of a biologist will mitigate some of the impacts on avian habitat by locating the bulk of facilities to the south of the most sensitive habitats, which extends into the sycamore stand from adjacent elderberry clumps. Additional tree and shrub vegetation of locally indigenous species should be planted to enhance the meadow-savannah setting.

If the sycamore stand is selected contrary to recommendations cited above, very careful physical siting must be made in the presence of a biologist or horticulturalist familiar with sycamore physiology. Because of the habitat importance of the stand, it would be desirable to avoid its use as an established picnic facility. Any use should be on a rotational basis as discussed in the previous section.

Signing combined with established safe trails could mitigate potential impacts from uncontrolled scrambling over nearby rock outcrop zones; and at the same time, satisfy the needs and curiosity of those who desire to explore such settings.

Fencing and warning signs should be established along the creek

margin to prevent accidental falls into the water course.

Fire hazard mitigations are the same as those described in the previous section, requiring the establishment of a summer-irrigated turf zone within the picnic area, and other measures enumerated. A turf zone should not be established near existing oak or sycamore trees or woody shrub specimens because of a general susceptibility of previously unirrigated natives to oak root fungus.

2.2 CAMP SITES

Two equestrian and hike-in campsites are proposed for the Wood Canyon area. An additional day use youth site is proposed for the northern section of Moulton Meadows.

2.2.1 Mathis Canyon -

The hike-in/equestrian access Mathis Canyon site is located on the floor of the north branch, a short distance above its confluence with the main portion of this tributary watershed. The site is located on level ground subject to some rainy season moisture accumulation.

Flora

The canyon bottom in the campsite area is vegetated by weeds and introduced grasses, with a high incidence of wet-field ruderal and herb species such as common cocklebur, western ragweed, willow dock (*Rumex salicifolius*), black mustard, Mexican tea, tall horseweed (*Conyza*

canadensis) and western verbena (Verbena lasiostachys). Wild oat species dominate the grassland component of the vegetative mix; soft chess and ripgut brome are also present along with ruderals such as doveweed and summer mustard. The grassland association extends onto the slopeland dividing this drainage from the main axis of Mathis Canyon. The north slope contains coastal sage scrub, described in section 2.1.3.

The canyon narrows above its mouth, and contains a scenic oak woodland and many rock outcrops. Woodland understory vegetation consists of California goldenrod (Silidago californica), giant rye, mugwort, brome grasses and some poison oak. The aspect of this woodland is open and dry, rather than shaded and mesic. Wetland plants occur along the creek channel, however. These include mulefat, elderberry bushes, creek nettles and some tree tobacco. Flora found around the rock outcrops examined consisted of spike moss, chalk lettuce, branching phacelia, California bee plant (Scrophularia californica), Nuttall's snapdragon and coastal cholla. The outcrop zones are potential localities for populations of many-stemmed dudleya.

Fauna

Fauna observed in the Mathis Cayon area are described in section 2.1.4. The upper north branch is a well used mule deer dispersion corridor. The proposed campground straddles this migration route.

Constraints

The principal biological constraint is described in the foregoing paragraph. The establishment and use of the campground could adversely impact nearby mule deer habitat and the on-site dispersion route.

Hydrological constraints include the location of the campground in a seasonally wet meadow. Safety constraints revolve around the location of the campground near a highly flammable coastal sage-scrub vegetated slope and in an area of high dry season fire hazard.

Mitigations

The campground should be located on the southern portion of the valley floor, near the grassy slope dividing the two branches of the Mathis drainage and well away from the flammable coastal sage scrub north-flanking slope. An open space corridor should be maintained on the canyon floor adjacent to the north slope, to permit nocturnal mule deer dispersion. This corridor should be screened from the campground by indiginous tree and shrub vegetation, including sycamores, elderberry bushes, toyon and holly-leaved redberry shrubs. (Species of Rhus and Malosma should not be used because of their flammability potential.)

The campground should be established on imported fill to raise its elevation above that of the surrounding, winter-wet floodplain. This fill should contain a high proportion of sand and gravel aggregate to inhibit "wicking" from wet ground beneath.

If the campground is to be used during the drought season, open fires should be prohibited, even in established camp stoves. Use of bottled gas stoves permanently established as part of the campground amenities, may be permissable if the campsite floor is maintained in irrigated turf; or, if vegetation is cleared to mineral around cooking areas. Ash cans should be provided for smokers and their use encouraged. (Most campgrounds do not provide amenities for users who

smoke, and consequently, the ground about picnic tables is strewn with cigarette butts.)

2.2.2 Wood-Corral Canyon Confluence -

This campground site is located on a level stream bench at the V shaped confluence of Wood and Corral Canyon. The site is dry, as the channels of both drainage are downcut a number of feet below the terrace.

Flora

The floor of the flat stream terrace contains an inroduced grassland flora dominated by common wild oats (*Avena fatua*), foxtail, ripgut brome, and summer mustard. Wild gourd clusters, cardoon or wild artichoke (*Cynara cardunculus*) patches and prickly lettuce (*Lactuca serriola*) plants are scattered across the mesa. Willow riparian woodland in each of the flanking drainage channels frames and shelters the mesa. Arroyo willows and elderberry bushes form a dense canopy over the shaded Corral Canyon Channel with an understory of phacelia, cocklebur and various grasses. Shading the Wood Canyon channel are arroy willows, one black willow, one coast live oak and elderberry bushes. The channel margins contain creek nettles, yellow monkeyflower (*Mimulus guttatus*), bristly oxtongue, celery, yerba mansa, knot grass, rabbitsfoot grass, mugwort and watercress. The slopeland south west of the confluence is covered by a dense coastal

sage scrub association with scattered chaparral shrubs and some live oak.

Fauna

The riparian woodland adjacent to the campsite is a good avian habitat, with numbers of scrub jays, house finches and other birds present. Raccoons and other mammals probably traverse the channels below, and other kinds of fauna would be attracted to the site when the drainages contain a substantial amount of water.

Constraints

Potential impact on valuable riparian habitat constitutes the only biological constraint perceived for this site. The proximity of the site to park ranger supervision and protection, and the barriers of the site provided by the incised creek channels and riparian woodland from flammable coastal sage scrub on nearby slopes ameliorate summer fire hazard potential to some degree, though the area would be vulnerable in a fire storm situation. While the creek channels are deeply incised, their banks appear to be stabilized by heavy tree and shrub vegetation.

Mitigations

To mitigate impact on riparin habitat generally, a trail should be established to the creek bottom in the area of the confluence, and off-trail incursion discouraged.

The existing annual grass cover of the mesa shoud be replaced by a summer-green irrigated turf if the site is to be used for summer camping. The extent of this "green lawn" should be of sufficient size to provide an emergency safety island in event of fire, extending across

the roadway to the ranger residence and its surroundings. An emergency escape and fire vehicle roadway should be established to the development edge up Corral Canyon. The campground should be planted with shad trees compatible with the area's indiginous riparian woodland and with summer turf irrigation. No open fires should be permitted in summer, though use of charcoal in camp stoves may be permissable if an irrigated turf setting is maintained, with cleared areas around each stove.

2.2.3 Moulton Meadows -

The area referred to as Moulton Meadows constitutes Aliso Viejo holdings on the ridgeline dividing the Bluebird Canyon watershed from that of lower Aliso Creek. The western portion of this ridge is under separate ownership, with proposed residential uses. South of Moulton Meadows is the Arch Beach Heights development. To the north is the Top of the World Community. A fire access roadway along the ridge is under construction. This gated right of way will connect the aforementioned communities and provide emergency north and south access for the proposed development. Water mains and hydrants have already been installed along the roadway.

The ridgeline is subject to substantial onshore airflow, which combined with heavy coastal sage scrub and chaparral cover in each adjacent watershed and on the site itself, increases significantly the wildland fire potential of the area and necessitates the ongoing safety improvements.

Flora

The Moulton Meadows ridgeline is vegetated by coastal sage scrub and significant native grassland cover and gravelly barren areas containing three plant species designated as rare or endangered. A portion of the northern ridgeline has been subject to past disturbance and contains a cover of ruderals and introduced grasses. The most extensive disturbed area is at the junction of the ridgeline roadway and a farm road from the Aliso Creek Valley. This site is recommended for recreational development and the remainder of the ridge for natural open space preservation. Of all of the camp and picnic sites on Aliso Viejo, the Moulton Meadows locale requires the most sensitive and specific locational planning.

Flora

The ridgeline site recommended for day-camp development, as detailed in the accompanying exhibit, its junction with the Aliso Creek Valley farm road which is designated as a secondary hiking trail. The existing vegetative cover of this site consists of a disturbance response community dominated by mustards, bromes (particularly soft chess), cardoon and gum plant (*Grindelia robusta*). Downslope, this vegetation becomes admixed with coastal sage scrub.

The southern and southwestern portion of the ridge top grassland as shown in the vegetation exhibit is vegetated by native purple needlegrass and wildflower species such as mariposa lily (*Calochortus* cf. *splendens*), Cleveland shooting star (*Dodecatheon clevelandii*),

blue-eyed grass (Sisyrinchium bellum), wild hyacinth, owl's clover (Orthocarpus purpurascens) and smooth cat's ear (Hypochoeris glabra). Other grass species, which in Aliso Viejo appear to be almost unique to the Meadows include melic (Melica imperfecta), bent (Agrostis diegoensis), nitgrass (Gasteridium ventricosum) and junegrass (Koeleria macrantha) .This native grassland exhibits the greatest species diversity in areas where it interdigitates with and is potected by coastal sage scrub shrubland.

Coastal sage scrub atop the ridge consists of California sagebrush, coastal goldenbush (including a gray-villous leaved variety or subspecies, possibly H. v. oxyphyllus), California buckwheat, deerweed, sticky monkeyflower, giant rye, glandular cudweed, chaparral bedstraw, Nuttall's bedstraw (Galium nuttallii), sawtoothed goldenbush (Haplopappus squarrosus), black sage, black-white sage hybrid forms. shor littoralis), bladderpod (Isomeris arborea), coyote bush (Baccharis pilularis) and intermixed chaparral shrubs: lemonadeberry, laurel sumac and tyron.

Barren, gravelly areas within the scrub are intermittantly occupied by the rare and endangered many stemmed dudleya, the rare western dichondra (Dichondra occidentalis - a post-fire succession species), fluffweed (Filago californica), blue wool stars and in appropriate south facing slope situations the rare, endangered and endemic Orange County turkish rugging. The location of each known population of species rated rare or endangered is indicated on the biotic resources exhibit for the Moulton Meadows area.

The north-facing slopes of the Bluebird Canyon and Aliso Creek watershed channels eminating from the ridgeline contain a dense coastal chaparral cover composed primarily of lemonadeberry and toyon. An unusual yellow-fruited form of the latter species occurs in upper Bluebird Canyon (Pope and Movich, 1973. The Bluebird Canyon watershed and portions of the ridgeline adjacent to Aliso Viejo property were also surveyed by the author (Marsh, 1977).)

Fauna

Significant muledeer habitats, which include bedding and possible fawning areas, exists on several ridgeline areas above the Aliso creek valley and immediately south east and north east of the day camp site. Wildlife dispersion corridors are easily detected from aerial photos when located in coastal sage scrub. Visible corridors are shown in the biotic resources exhibit for Moulton Meadows. The combination of habitat types including those providing protective cover and food resources is conductive for maintenance of substantial wildlife populations.

Other fauna evidence observed included burrows, tracks or scat of desert woodrat (*Neotoma lepida*), pocket gopher (*Thomomys bottae*), agile kangaroo rat (*Dipodomys agilis*) and Audubon cottontails. Birds were not in evidence during the windy survey period, though many scrubland species are expected.

Constraints

Biological constraints include disruption of localities of rare or endangered plant species, impact on native grasslands and grassland

wildflower localities and disturbance of mule deer fawning habitats.

Safety constraints include the location of the site in an extremely high fire hazard area, at the upper throats of several heavily brushed canyons in an area of high onshore winds. (This constraint is partially mitigated by the fire road under construction.)

Climatological constraints include the aforementioned, sometimes annoying briskness of the onshore wind.

Mitigations

A no-project or scaled-down project alternaive should be considered for the Moulton Meadows site, particularly as conceived as a youth day camp. The large number of individuals brought into the area by such an installation would pose a definite threat on nearby sensitive locales even if the camp is as carefully sited as recommended. The Moulton Meadows is an excellent teaching and nature study resource for small groups of people, or for larger groups which are carefully supervised; it is the potential that inadequately supervised large group use will exert substantial negative impact that warrants this recommendation.

A scaled-down recreational facility consisting of a few picnic tables screened with vegetation as a shelter from the wind, drinking water and restroom facilities would be appropriate within the designated site, as a hiking trail destination or starting point. Because of the proximity of the site to paved access roads and a future development edge, vandalism can be predicted on permanent installations.

It is recommended that an active interpretation program be conducted in the Moulton Meadows area, because of the wealth of unique

biotic resources it contains. Passive interpretive techniques would not be appropriate because of the vandalism potential related to easy access. The area is currently used as an active recreation site by motorcyclists. Some type of fencing will be required to prevent the future entry of vehicles onto the Moulton Meadows open space.

2.3 RANGER RESIDENCE

The proposed ranger residence is located in lower Corral Canyon a short distance north, and on the other side of the Wood Canyon farm road from the Wood-Corral confluence campground site. The site is located on level ground bissected by the Corral Canyon drainage.

Flora

The site is located on a degraded and cattle impacted grassland. Foxtails and ripgut brome are dominant grasses; others include red brome (*Bromus rubens*), common and slender wild oats. Forbs within the grassland consist of doveweed, wild gourd, prickly lettuce, summer mustard, Russian thistle, cheese weed, telegraph weed and tall horseweed.

Slopeland north of the residence site consists partly of a disturbed grassland/disturbed coastal sage scrub ecotone, and partly of dense coastal sage scrub with admixed chaparral. The latter association is composed principally of black sage and lemonadeberry, and additionally contains sagebrush, buckwheat, sticky monkeyflower, western prickly pear, giant rye and elderberry bushes.

Constraints and Mitigations

No biological constraints are perceived. Safety constraints consist of the area's fire hazard potential. An emergency fire roadway and maintenance of an irrigated turf zone around structures, as discussed in section 2.2.2 will partially mitigate fire constraints. Construction materials for the facility should be non-flammable.

2.4 TRAILS

A series of proposed bicycle, equestrian and pedestrian trails follow existing farm roads, exerting little construction impact on natural systems except in areas where substantial widening or rerouting over wildland is required.

2.4.1 AWMA Road -

The existing, paved Aliso Water Management Agency Sewer Treatment Plant access road is to constitute the principal portion of a bikeway and shuttle bus route between the northern end of the greenbelt and the Aliso Creek Beach. Joint use by bicycles and powered vehicles will require widening the existing roadway thirty feet. The roadway may need to be realigned in the vicinity of the AWMA plant, to avoid an area of blind curves.

Localities where road widening could impact potentially sensitive resources were examined, mapped and are herein described.

No impacts are predicted from the north end of the road to its junction with Wood Canyon. This portion of the roadway passes through cattle-degraded introduced grasslnd.

Between Wood Canyon and Big Bend, a cave pocketed rock outcrop zone terminates a short distance west of the roadway. The outcrop is located next to a cattle guard across the road, the only such structure in this portion of the roadway, and is roughly 1,000 feet south of the Wood Canyon junction. The locality is an archaeological site.

Flora species common on the outcrop include pine goldenbush (Haplopappus pinifolius, a characteristic outcrop shrub species), bricklebush, Nuttall's snapdragon, small-headed cudweed, chalk lettuce, prickly pear cactus and California buckwheat. The site is a recorded locality for the rare and endangered endemic, Orange County Turkish Rugging[1].

To mitigate adverse impact on this sensitive geologic, archaeological and biological resource, road widening should not impinge upon it. The formation should additionally be exempt from roadside vegetation control. Near the outcrop zone, adequate room exists to the southeast of the AWMA Road to permit the bulk of the widening on that side.

Several other slopes terminate in the vicinity of the roadway as it proceeds southward. These all contain coastal sage scrub and are not known to harbor sensitive, rare or endangered plant species.

To avoid blind curves south of the AWMA plant, it is proposed that a new route be establihed over a saddle to the west. Substantial earth removal would be required to install a roadway of sufficient gradient to be suitable for bicycling; however, a steeper gradient would be permissible for powered shuttle vehicles, allowing the existing road to

[1] Marsh and Marsh, 1978, Site 15.

remain for bicycles only. The saddle was surveyed and found to contain sensitive areas of native grassland and a population of a regionally uncommon shrub, little leaved redberry (Rhamnus crocea). The size of the stand would be sufficient to support a northern outlier population population of the Hermes copper (Lycaena hermes), a rare butterfly species now recorded only to the south, from San Diego County to Baja California. Lepidopterists believe that significant populations of little-leaved redberry in south Orange County may harbor the butterfly, which is dependent on the shrub as a larva foodplant[1] Existance of the Hermes copper in the saddle area has not been determined, however.

Flora species recorded from the saddle include purple needlegrass, blue eyed grass, elongate buckwheat, little leaved redberry, bush mallow, California pepper (Schinus molle), Mexican elderberry, pine goldenbush, lemonadeberry and an assemblage of sage scrub plants, dominant on the slopes below the saddle. The latter grouping includes the characteristic components, California sagebrush, California buckwheat, black sage, white sage and Nuttall's bedstraw.

Because of the potential destruction of valuable biotic resources on the saddle, it is recommended that alternative routes be considered and surveyed.

Below the blind curve area, the roadway passes through a planted eucalyptus stand. Trees near the road will be removed when it is widened.

The lower portion of the beach route was not examined because of

[1] Orsak, 1977, page 270.

lack of access through the golf course beyond the eucalyptus stand. However, a population of the rare, endangered and endemic Laguna Beach dudleya (Dudleya stolonifera) occurs or once occurred on rock outcropping in the vicinity of Ben Brown's Restaurant, at the mouth of Aliso Creek. It is not known whether extant populations would be impinged upon by the proposed roadway.

2.4.2 Aliso Creek Equestrian Trail -

The Aliso Creek Equestrian Trail route was surveyed from south to north, from its junction with the Wood Canyon farm road, across Aliso Creek and hence northerly to the vicinity of the proposed staging area. Little impact is predicted from this trailway except where crossing Aliso Creek, since it follows an established farm road. The gradient of the roadway is essentially level and the stream terrace through which it passes is open and treeless.

From the end of the Wood Canyon farm road to the presently unused farm road on the east side of Aliso Creek, the proposed trail follows the lower Wood Canyon channel, which contained no water during the survey. Riparian scrub vegetation characterizes this reach. Mulefat, tree tobacco, Mexican tea, creek nettles, mugwort, coastal goldenbush, cocklebur and western ragweed grow along the dry channel.

Along the wet margin of Aliso Creek, the characteristic saline riparian assemblage of saltgrass, yerba mansa, celery, bristly oxtongue, Spanish sunflower, Olney's bulrush and knotgrass, is present. The creek is shallow and was easily forded, apparently containing no quicksand

deposits or other hazards in the route of crossing. A line of large mulefat and castor bean (Ricinis communis) grows along the creek edge.

Northward, the farm road passes variously, through areas of impacted and ruderal-dominated grassland, through goldenbrush scrub, by areas of mulefat, giant reed, nettles and tarragon (Artemisia dracunculus) clumps and through rush-sedge dominated marshy fields. The latter associations are most biologically interesting. Dryer portions of these areas are covered by acres of alkali rye (Elymus triticoides) while damper areas are dominated by Mexican rush and also contain yerba mansa sedge (Carex sp.) and saltgrass. A male marsh hawk was seen foraging in this area.

A potential hazard to the roadway exists as it passes near an encroaching creek meander in the vicinity of the elderberry stand south of the previously described picnic ground site. When examined, the edge of the stream terrace was only eight feet from the margin of the roadway, and this edge was continuing to deteriorate at the apex of the meander below. Immediate corrective measures are required to save the roadway at this point. The author was uncertain where the equestrian trail would recross the creek to gain access to the staging area, if such an area is built where it is presently planned. It is recommended that a crossing not be made within the dense stands of willows north of the picnic site, because of their aesthetic value and habitat role as a roosting area for great blue and green herons. A crossing in the vicinity of the picnic area will impinge on an essentially open riparian zone, the vegetation of which is described in section 2.1.1.

Disturbance impact to foraging herons is predicted, and these sensitive bird species may be forced to leave the area, despite mitigations recommended in section 2.1.1

The equestrian trail parallels a wildlife dispersion corridor along the margins of Aliso Creek. The corridor at the present time appears to be used principally by small and medium-sized mammals, mainly raccoons. No evidence of deer was seen. Coyotes probably traverse the farm road, though all tracks had been obliterated by cattle.

2.4.3 Wood Canyon Trail and North Link -

The Wood Canyon hiking and equestrian trail follows the existing farm road, and no improvements are contemplated at this time. The trail follows a wildlife dispersion corridor (Jones and Stokes, 1978); however, human and wildlife uses should not conflict since the former use would be during the day and the latter principally at night.

Trail improvements recommended include reconstruction of the roadway as it passes through swampy ground adjacent to Mallard Marsh, and trimming of overhanging tree branches which might be a hazard to horseback riders.

The north link leaves the bottom of Wood Canyon, joining an old farm road which proceeds up the west slope at a moderate gradient comfortable for hiking. The roadway is partially overgrown wih coastal sage scrub and successional vegetation and will require some restorative blade work. It passes through a high fire hazard area and should be closed to public use during the drought season.

Scenic amenities along the link include views of dense oak woodland in the lateral canyon below, areas of rock outcropping and coastal sage scrub and grassland on higher slopes. A full inventory of plant and animal species observed along the route is included in the appendix species lists, because of the need for some removal of vegetation which has invaded the route. England and Nelson, 1977, and Jones and Stokes, 1978, show the existing roadway as a wildlife dispersion corridor link between Wood Canyon, the ridgeline above and eventually Laguna Canyon. During the field survey, it appeared that the link was being utilized principally by coyotes.

The trail joins an existing farm road atop the ridge west of Wood Canyon. The farm road is outside of the Aliso Viejo study area and access to it was not obtained from the property owner. No impacts are predicted, however, since equestrian and hiking use requires no improvement to the roadway that would impact adjoining habitat.

3.0 REFERENCES CITED

Csuti,Blair, 1980. Special Animals of the California Fauna. California Natural Diversity Data Base. Sacramento, CA.

England, Sid and Steven Nelson, 1977. Aliso Creek Corridor Planning Units 2 and 3 Specific Plan Biological Assessment. England and Nelson Environmental Consultants, Riverside, CA.

Holstein, Glen, 1981. Special Plant Communities of California - Working Lists. California Natural Diversity Data Base, Sacramento, CA.

Jones and Stokes, Inc., 1978. Evaluation of the Proposed Aliso Viejo Development Plan with Respect to Biological and Selected Physical Resources in Aliso Viejo Envirionmental Impact Report, Technical Appendix E. Jack G. Raub Co., Costa Mesa, CA.

Kuchler, A.W., 1964. Potential Natural Vegetation of the Conterminous United States. American Geographical Society Special Publication 36.

Marsh, Karlin, 1977. Biotic Resources Assessment, Laguna Properties Site, Laguna Beach, CA. IN Initial Study, EIR, Laguna Properties, Laguna Beach, CA. Larry Seeman Associates, Newport Beach, CA.

Marsh, Karlin and Gordon Marsh, 1978. Orange County Turkish Rugging Sites within the Proposed Aliso Viejo Planned Community in Aliso Viejo Environmental Impact Report, Technical Appendix E. Jack G. Raub Co., Costa Mesa, CA.

Olmsted, John, 1978. Multi-Value Open Space Analysis of the Aliso Viejo Environmental Impact Report, Technical Appendix E. Jack G. Raub Co., Costa Mesa, CA.

Orsak, Larry, 1977. The Butterflies of Orange County, California. Center for Pathiobiology; Museum of Systematic Biology, University of California, Irvine, CA.

Pope, R. L. and F. C. Movich, 1973. Biota of Laguna Investor's Development. In Draft EIR on Tenative Tract 5607, City, of Laguna Beach, CA. Envista, Orange, CA.

Smith, James Payne et. al., 1980. Inventory of Rare and Endangered Vascular Plants of California. California Native Plant Society Special Publication No.1, Second Edition. CNPS, Berkeley, CA.

_____ 1981. Inventory of Rare and Endangered Vascular Plants of California, First Supplement. CNPS, Berkeley, CA.

Tate, James, Jr., 1981. "The Blue List For 1981."American Birds, Vol. 35, No. 1, January 1981.

4.0 FLORA AND FAUNA SPECIES INVENTORY

4.1 FLORA

Occurance
D - Dominant
C - Common
O - Occasional
U - Uncommon

Locality:

Aliso Creek

1. Equestrian picnic area
2. Big Bend picnic area
3. Aliso Creek equestrian trail

AWMA ROAD

1. Rock outcrop zone near AWMA Road 1,000' s. of Wood Canyon
2. Other slope toes potentially impacted by AWMA Road widening
3. Saddle crossing route south of AWMA treatment plant

MM - Moulton Meadows

Wood Canyon

1. Dripping Cave Canyon picnic area and environs
2. Mallard Marsh
3. Mathis Canyon
4. Wood-Corral confluence area
5. Upper Wood Canyon picnic ground
6. Wood Canyon north trail link

Status

** Disjunct, rare or endangered
 * Introduced

Community or Association

NG - native grassland

IG - introduced grassland

W - Weed or ruderal of disturbed successinal sere

R - riparian, general

R-w - riparian woodland (including understory)

R-bs - riparian *Baccharis* scrub

R-gs - riparian goldenbush scrub

R-s/a - riparian - saline/alkaline wet margins

R-j/c - riparian - *Juncus* *Carex* swale

R-fwm - riparian - fresh water marsh or emergent aquatic

H - horticultural introduction

Css - coastal sage scrub

Ch - coastal chaparral

OW - southern oak woodland

B - barrens and outcrop zones
Bo - outcrop barrens
Bg - gravel or sand barrens

LYCOPODIAE

	Occurance	Community	Aliso Creek 1	Aliso Creek 2	Aliso Creek 3	AWMA 1	AWMA 2	AWMA 3	MM	Wood Canyon 1	Wood Canyon 2	Wood Canyon 3	Wood Canyon 4	Wood Canyon 5	Wood Canyon 6
SELAGINELLACEAE- CLUB-MOSS FAMILY															
Selaginelsa bigelovii little club-moss	Ø	Bo	-	-	-	-	-	-	-	x	-	x	-	-	-
ASPIDIACEAE - FERN FAMILY															
Dryopteris arguta wood fern	Ø	OW	-	-	-	-	-	-	-	-	-	x	-	-	x
POLYPODIACEAE - FERN FAMILY															
Polypodium californicum California polypody	Ø	OW	-	-	-	-	-	-	-	x	-	x	-	-	-
PTERIDACEAE - FERN FAMILY															
Adiantum capillus-veneris maiden-hair fern	U	OW	-	-	-	-	-	-	-	x	-	x	-	-	x
Pellaea andromediaefolia coffee fern	U	OW	-	-	-	-	-	-	-	x	-	-	-	-	-
Pityrogramma triangularis goldenback fern	U	OW	-	-	-	-	-	-	-	-	-	x	-	-	-
P. t. viscosa silverback fern	U	OW	-	-	-	-	-	-	-	-	-	x	-	-	-

	Occurance	Community	Aliso Creek 1	Aliso Creek 2	Aliso Creek 3	AWMA 1	AWMA 2	AWMA 3	MM	Wood Canyon 1	Wood Canyon 2	Wood Canyon 3	Wood Canyon 4	Wood Canyon 5	Wood Canyon 6
			Locality												
AMARANTHACEAE - AMARANTH FAMILY															
Amaranthus blitoides prostrate pigweed	O	W	-	-	x	-	-	-	-	-	-	x	-	-	-
ANACARDIACEAE - SUMAC FAMILY															
Rhus integrifolia lemonadeberry	D	Ch	-	-	-	-	x	x	x	x	-	x	x	x	x
ANACARDIACEAE - SUMAC FAMILY															
Malosma laurina laurel sumac	O	Ch	-	-	-	-	-	-	x	x	-	-	-	-	x
**Schinus molle* pepper tree	U	H	-	-	-	-	-	x	-	-	-	-	-	-	-
Toxicodendron diversilobum poison oak															
APIACEAE - CARROT FAMILY															
**Apium graveolens* celery	c	RW Rs/a	x	x	-	-	-	-	-	-	x	-	x	-	-
**Conium maculatum* poison-hemlock	O	R-fwm	-	-	-	-	-	-	-	-	x	-	-	-	-

	Occurance	Community	Aliso Creek 1	Aliso Creek 2	Aliso Creek 3	AWMA 1	AWMA 2	AWMA 3	MM	Wood Canyon 1	Wood Canyon 2	Wood Canyon 3	Wood Canyon 4	Wood Canyon 5	Wood Canyon 6
			Locality												
Daucus pusillus rattlesnake weed	O	Css	-	-	-	-	-	-	x	-	-	-	-	-	-
*Foeniculum vulgare sweet fennel	O	W	x	-	-	-	-	-	-	-	-	-	-	-	x
Sanicula crassicaulis Pacific sanicle	U	OW	-	-	-	-	-	-	-	-	-	-	-	-	x
ASCLEPIADACEAE - MILKWEED															
Asclepias californica California milkweed	I	IG	-	-	-	-	-	-	-	-	-	x	-	-	-
Asclepias fascicularis Mexican milkweed	U	IG	-	x	-	-	-	-	-	-	-	x	-	-	-
ASTERACEAE - SUNFLOWER FAMILY															
Ambrosia acanthicarpa annual bur-ragweed	U	R-bs	x	-	-	-	-	-	-	-	-	-	-	-	-
Ambrosia psilostachya western ragweed	C	R-gs IG	x	x	x	x	-	-	-	x	x	x	x	-	-
*Anthemis cotula mayweed	O	R-s/a	x	x	x	-	-	-	-	-	-	-	-	-	-
Artemisia california coastal sagebrush	D	Css	x	x	x	x	x	x	x	x	-	x	x	x	x
Artemisia douglasiana California mugwort	C	RW	x	x	x	-	-	-	-	x	x	x	x	x	x
Artemisia dracunculus tarragon	U	R-bs	-	-	x	-	-	-	-	-	-	-	-	-	-

Locality

	Occur-ance	Commun-ity	Aliso Creek 1	Aliso Creek 2	Aliso Creek 3	AWMA 1	AWMA 2	AWMA 3	MM	Wood Canyon 1	Wood Canyon 2	Wood Canyon 3	Wood Canyon 4	Wood Canyon 5	Wood Canyon 6
Baccharis glutinosa mulefat	D	Rbs	x	x	x	-	-	-	-	x	x	x	x	x	x
Baccharis pilularis coyote bush	O	Css Rbs	-	x	x	-	x	x	x	-	-	x	-	-	-
Brickellia californica California brickellbush	O	Bo	-	-	-	x	x	-	-	x	-	x	x	x	-
Calycadenia tenella rosin weed	U	IG Bg	-	-	-	-	-	-	x	x	-	-	-	-	-
Cirsium vulgare bull thistle	O	W (R)	-	x	x	-	-	-	-	-	x	x	-	-	-
*Conyza canadensis horseweed	O	W (IG,R)	-	-	-	-	-	-	-	-		x	x	-	-
Corethrogyne filaginifolia common corethrogyne	U	Css	-	-	-	x	-	-	x	x	-	-	-	-	x
*Cotula coronopifolia brass buttons	C	Rs/a	x	x	x	-	-	-	-	-	-	-	-	-	-
*Cynara cardunculus cardoon	O	IG	x	x	x	-	-	-	x	-	-	-	x	-	-
Encelia californica bush sunflower	U	Css	-	-	-	-	-	-	-	-	x	-	-	-	x
Erigeron foliosus leafy daisy	U	OW	-	-	-	-	-	-	-	x	-	-	-	-	-
Filago californica Califonia fluffweed	U	B	-	-	-		-	-	x	-	-	x	-	-	-
Gnaphalium bicolor bicolored-leaf cudweed	O	Bo	-	-	-	-	-	-	-	x	-	x	-	x	-

Locality

	Occur-ance	Commun-ity	Aliso Creek 1	2	3	AWMA 1	2	3	MM	Wood Canyon 1	2	3	4	5	6
Gnaphalium californicum California everlasting	O	Css IG R-bs	-	-	-	-	-	-	x	x	-	x	-	-	-
Gnaphalium microcephalum white everlasting	O	Bo Css	-	-	-	x	-	-	-	-	-	-	-	x	-
Grindelia robusta gum-plant	O	NG	-	-	-	-	-	x	x	-	-	-	-	-	-
Haplopappus pinifolius saw-toothed goldenbush	O	Bo	-	-	-	x	x	x	-	-	-	-	-	-	-
Haplopappus venetus coastal goldenbush	D	R-gs	x	x	x	-	x	x	x	x	x	x	x	x	x
H. V. oxyphyllus	U	Css	-	-	-	-	-	-	x	-	-	-	-	-	-
Helianthus annuus common sunflower	U	R	x	-	-	-	-	-	-	-	-	-	-	-	-
Hemizonia fasciculata fascicled tarweed	O	IG	-	x	-	-	-	-	x	x	-	x	-	-	-
Heterotheca grandiflora telegraph weed	C	W	x	x	x	x	-	-	-	x	-	-	x	x	-
Hypochoeris glabra smooth cat's ear	O	NG	-	-	-	-	-	-	x	-	-	x	-	-	-
*Lactuca serriola prickly lettuce	O	W	-	-	x	-	-	-	-	-	-	-	x	-	-
*Picris echioides bristly ox tongue	O	RW R-s/a	x	x	x	-	-	-	-						
Pluchea purpurascens marsh fleabane	O	R- fwm	-	-	x	-	-	-	-	-	x	-	-	-	-

Locality

	Occur-ance	Commun-ity	Aliso Creek 1	2	3	AWMA 1	2	3	MM	Wood Canyon 1	2	3	4	5	6
*Pulicaria hispanica Spanish sunflower	O	R-s/a	x	x	x	-	-	-	-	-	-	-	-	-	-
*Silybum marianum milk thistle	U	W	-	x	-	-	-	-	-	-	-	-	-	-	-
Solidago californica California goldenrod	U	OW	-	-	-	-	-	-	-	-	x	-	-	-	-
*Sonchus oleraceus common sow thistle	O	W	x	x	x	-	-	-	-	-	x	-	-	-	-
Stephanomeria exiqua small stephanomeria	O	Css	-	-	-	-	x	-	-	-	-	-	-	-	-
Stephanomeria virgata tall stephanomeria	Ø	IG	x	-	-	-	-	-	-	-	-	-	-	-	-
*Xanthium strumarium cocklebur	C	R	x	x	x	-	-	-	-	x	x	x	x	-	-
Cryptantha intermedia white forget-me-not	U	Css	-	-	-	x	-	-	-	-	-	-	-	-	-
BORAGINACEAE - BORAGE FAMILY															
Heliotropium curassavicum salt heliotrope	C	R-s/a	x	x	x	-	-	-	-	-	x	-	-	-	-
BRASSICACEAE - MUSTARD FAMILY															
*Brassica geniculata short-podded mustard	C	IG	x	x	x	-	-	x	x	x	-	x	x	x	x
*Brassica nigra black mustard	C	IG	x	x	x	-	-	-	x	-	-	x	-	-	-

	Occurance	Community	Locality: Aliso Creek 1	Aliso Creek 2	Aliso Creek 3	AWMA 1	AWMA 2	AWMA 3	MM	Wood Canyon 1	Wood Canyon 2	Wood Canyon 3	Wood Canyon 4	Wood Canyon 5	Wood Canyon 6
*Raphanus sativus wild radish	O	W(R)	x	x	x	-	-	-	-	-	-	-	-	-	-
Rorippa nasturtium aquaticum water-cress	C	R	x	x	x	-	-	-	-	-	-	-	x	-	-
*Sysymbrium irio London-rocket	U	W	-	x	-	-	-	-	-	-	-	-	-	-	-
CACTACEAE - CACUS FAMILY															
*Opuntia ficus-indica Indian fig	U	Css RW	-	-	x	-	-	-	-	-	-	-	-	-	-
*Opuntia "occidentalis" hybrid coastal prickly pear	C	Css	-	-	-	-	-	-	x	-	-	x	x	x	x
Opuntia littoralis coasstal prickly pear	O	Css	-	-	-	x	x	x	x	-	-	-	-	-	-
Opuntia prolifera coast cholla	O	Css	-	-	-	-	-	-	-	x	-	x	-	-	x
CAPPARACEAE - CAPER FAMILY															
Isomeris arborea bladderpod	U	Css	[1] -	-	-	-	-	-	x	-	-	-	-	-	-

[1] Maritime desert scrub.

	Occurance	Community	Locality: Aliso Creek 1	Aliso Creek 2	Aliso Creek 3	AWMA 1	AWMA 2	AWMA 3	MM	Wood Canyon 1	Wood Canyon 2	Wood Canyon 3	Wood Canyon 4	Wood Canyon 5	Wood Canyon 6
CAPRIFOLIACEAE - HONEYSUCKLE FAMILY															
Sambucus mexicana Mexican elderberry	C	RW Ch	x	x	x	-	-	x	-	x	-	x	x	x	-
Symphoricarpos mollis spreading snowberry	U	OW	-	-	-	-	-	-	-	x	-	-	-	-	-
CARYOPHYLLACEAE - PINK FAMILY															
*Silene gallica wilndmill pink	U	W	-	x	-	x	-	-	-	-	-	-	-	-	-
CERATOPHYLLACEAE HORNWORT FAMILY															
Ceratophyllum demersum hornwort	U	R-fwm	-	x	-	-	-	-	-	-	-	-	-	-	-
CHENOPODIACEAE - GOOSEFOOT FAMILY															
Atriplex canescens fourwinged saltbush	U	R-s/a	-	-	x	-	-	-	-	-	-	-	-	-	-
Atriplex patula spear orache	U	R-s/a	x	x	x	-	-	-	-	-	-	-	-	-	-
*Atriplex semibaccata	O	G	-	-	x	-	-	-	-	-	-	-	-	-	-
*Chenopodium album lamb's quarters	U	W	x	-	-	-	-	-	-	-	-	-	-	-	-

			Locality												
			Aliso Creek			AWMA				Wood Canyon					
	Occurance	Community	1	2	3	1	2	3	MM	1	2	3	4	5	6
*Chenopodium ambrosioides Mexican-tea	O	R	x	x	x	-	-	-	-	x	x	x	x	-	-
*Chenopodium rubrum red goosefoot	U	W	-	-	x	-	-	-		-	-	-	-	-	-
*Salsola iberica Russian-thistle	O	W	-	x	x	-	-	-	x	-	-	-	x	-	x
Calystegia macrostegia western bindweed	U	Css	-	-	-	-	-	-	-	-	-	-	-	-	x
CONVOLVULACEAE - MORNING-GLORY FAMILY															
Calystegia macrostegia western bindweed	U	Css	-	-	-	-	-	-	-	-	-	-	-	-	x
**Dichondra occidentalis western dichondra	U	Css	-	-	-	-	-	-	x	-	-	-	-	-	-
CRASSULACEAE - STONECROP FAMILY															
Dudleya lanceolata lance-leaved dudleya	O	Bo	-	-	-	-	-	-	-	-	x	-	x	-	x
**Dudleya multicaulis many stemmed dudleya	U	Bo Bg	-	-	-	-	-	-	x	x	-	x	-	-	-
Dudleya pulverulenta chalf lettuce	O	Bo	-	-	-	x	-	-	-	x	-	x	-	-	x

	Occur-ance	Commun-ity	Aliso Creek 1	Aliso Creek 2	Aliso Creek 3	AWMA 1	AWMA 2	AWMA 3	AWMA MM	Wood Canyon 1	Wood Canyon 2	Wood Canyon 3	Wood Canyon 4	Wood Canyon 5	Wood Canyon 6
			Locality												
**Dudleya stolonifera Laguna Beach dudleya	U	Bo	-	-	-	-	-	1	-	-	-	-	-	-	-
CUCURBITACEAE - GOURD FAMILY															
Curcubita foetidissima calabazilla	O	IG	x	x	x	-	-	-	-	-	-	x	x	-	-
EUPHORBIACEAE - SPURGE FAMILY															
Eremocarpus setigerus dove weed	C	IG	x	x	x	-	-	-	-	x	-	x	x	x	-
Euphorbia albomarginata rattlesnake weed	U	Bo	-	-	-	x	-	-	-	x	-	x	-	-	-
*Ricinus communis castor-bean	O	R-bs	-	x	x	-	-	-	-	-	-	-	-	-	-
FABACEAE - PEA FAMILY															
*Lotus crassifolius bird's-foot trefoil	U	W	-	x	-	-	-	-	-	-	-	-	-	-	-
Lotus scoparius deerweed	O	Css	-	-	-	-	-	-	x	x	-	x	-	-	x
Lupinus sp. lupine	U	G	-	-	-	-	-	-	-	-	-	x	-	-	-
Lupinus excubitus interior bush lupine	U	Css	-	-	-	-	-	-	-	2	-	-	-	-	-

[1] May occur in outcrops at mouth of Aliso Creek.

[2] Near cave rocks, Wood Canyon south of Dripping Springs Canyon.

Locality

	Occur-ance	Commun-ity	Aliso Creek 1	2	3	AWMA 1	2	3	MM	Wood Canyon 1	2	3	4	5	6
*Medicago polymorpha bur-clover	C	W	x	x	x	-	-	-	-	-	-	-	-	-	-
*Melilotus albus white sweet clover	O	R	x	x	x	-	-	-	-	-	-	-	-	-	-
FAGACEAE - BEECH FAMILY															
Quercus agrofolia coast live oak	D	OW	-	-	-	-	-	-	-	x	-	x	x	x	x
Quercus engelmannii Repported from Wood Canyon. Questionable.															
FRANKENIACEAE - FRANKENIA FAMILY															
Frankenia grandifolia alkali heath	R-s/a		-	-	x	-	-	-	-	-	-	-	-	-	-
GERANIACEAE - GERANIUM FAMILY															
*Erodium moschatum white stemmed filaree	U	IG	x	-	-	-	-	-	-	-	-	-	-	-	-
HYDROPHYLLACEAE - WATERLEAF FAMILY															
Phacelia sp. phacelia	U	W RW	-	-	-	-	-	-	-	-	-	-	x	-	-
Phacelia ramosissima branching phacelia	O	Bo	-	-	-	-	x	-	-	x	-	x	-	x	-

Locality

	Occur-ance	Commun-ity	Aliso Creek 1	2	3	AWMA 1	2	3	MM	Wood Canyon 1	2	3	4	5	6
LAMIACEAE - MINT FAMILY															
*Marrubium vulgare horehound	O	IG Css	x	x	x	-	-	-	x	-	-	x	x	x	x
Salvia apiana white sage	O	Css	-	-	-	-	x	x	-	x	-	x	x	x	x
Salvia mellifera black sage	D	Css	-	-	-	-	x	x	x	x	-	x	x	x	x
**Salvia spathacea pitcher sage	U	OW	-	-	-	-	-	-	-	-	-	x	-	-	-
Trichostema lanceolatum vinegar weed	U	IG	-	x	x	-	-	-	-	-	-	-	-	-	-
MALVACEAE - MALLOW FAMILY															
Malocothamnus fasciculatus mesa bushmallow	O	Css	-	-	-	-	-	x	-	-	-	x	-	x	x
*Malva parviflora cheeseweed	U	W	-	x	-	-	-	-	-	-	-	-	x	-	
MYRTACEAE - MYRTLE FAMILY															
*Eucalyptus sp. eucalyptus	O	H	-	-	-	-	-	x	-	-	-	-	-	-	-
NYCTAGINACEAE - FOUR - O'CLOCK FAMILY															
Mirabilis californica wishbone bush	O	Bo	-	-	-	-	x	-	-	-	-	-	-	x	-

	Occurance	Community	Locality: Aliso Creek 1	Aliso Creek 2	Aliso Creek 3	AWMA 1	AWMA 2	AWMA 3	MM	Wood Canyon 1	Wood Canyon 2	Wood Canyon 3	Wood Canyon 4	Wood Canyon 5	Wood Canyon 6
PAPAVERACEAEA - POPPY FAMILY															
Eschscholzia californica California poppy	U	G	x	-	-	-	-	-	-	-	-	-	1	-	-
PLANTAGINACEAE - PLANTAIN FAMILY															
Plantago erecta California plantain	U	Bg	-	-	-	x	-	-	x	-	-	-	-	-	-
*Plantago major common plantain	O	R	x	x	x	-	-	-	-	-	x	-	-	-	-
PLATANACEAE - SYCAMORE FAMILY															
Platanus racemosa California sycamore	O	RW	-	-	-	-	-	-	-	-	-	x	-	x	-
POLEMONIACEAE - PHLOX FAMILY															
Eriastrum sapphirinum sapphire eriastrum	U	Bo	-	-	-	x	-	-	x	x	-	-	-	-	-
POLYGONACEAE - BUCKWHEAT FAMILY															
**Chorizanthe staticoides ssp. chrysacantha Orange County turkish rugging	U	Bg	-	-	-	x	-	-	x	-	-	-	-	-	-
Eriogonum elongatum long-stemmed eriogonum	U	NG	-	-	-	-	-	x	-	x	-	-	-	-	-
Eriogonum fasciculatum California buckwheat	C	Css	-	-	-	x	x	x	x	x	-	x	x	x	-
Eriogonum nudum	U	Bo	-	-	-	x	-	-	-	-	-	-	-	-	-

[1] Poppy nose.

Locality

	Occur-ance	Commun-ity	Aliso Creek 1	2	3	AWMA 1	2	3	MM	Wood Canyon 1	2	3	4	5	6
Polygonum aviculare common knotweed	O	W (R)	x	x	x	-	-	-	-	-	-	x	-	-	-
Polygonum lapathifolium willow-weed	U	R	x	-	-	-	-	-	-	-	-	-	-	-	-
*Rumex crispus curly dock	C	R	x	x	x	-	-	-	-	-	x	-	-	-	-
Rumex salicifolius willow dock	U	R	-	-	-	-	-	-	-	-	-	x	-	-	-
PRIMULACEAE - PRIMROSE FAMILY															
*Anagallis arvensis scarlet pimpernel	O	R(W)	x	x	x	-	-	-	-	-	-	-	-	-	-
Dodecatheon clevelandii shooting star	O	NG	-	-	-	-	-	-	x	-	-	-	-	-	-
RHAMNACEAE - BUCKTHORN FAMILY															
Rhamnus crocea redberry	U	CH	-	-	-	-	-	x	-	-	-	-	-	-	-
Rhamnus ilicifolia large-leaved redberry	O	CH	-	-	-	-	-	-	-	-	-	x	-	-	x
ROSACEAE - ROSE FAMILY															
Heteromeles arbutifolia toyon	D	Ch	-	-	-	-	-	x	x	x	-	x	x	-	x
Rosa californica wild rose	U	OW	-	-	-	-	-	-	-	-	-	-	-	-	x

	Occurance	Community	Locality: Aliso Creek 1	Aliso Creek 2	Aliso Creek 3	AWMA 1	AWMA 2	AWMA 3	MM	Wood Canyon 1	Wood Canyon 2	Wood Canyon 3	Wood Canyon 4	Wood Canyon 5	Wood Canyon 6
RUBIACEAE - MADDER FAMILY															
Galium angustifolium narrow-leaved bedstraw	O	Css	-	-	-	-	-	x	-	x	-	-	-	x	x
Galium nuttallii Nuttall's bedstraw	U	Css	-	-	-	-	-	x	x	-	-	-	-	-	-
RUTACEAE - RUE FAMILY															
**Cneoridium dumosum bushrue	U	Css	-	-	-	-	-	-	x	-	-	-	-	-	-
SALICACEAE - WILLOW FAMILY															
Salix gooddingii black willow	O	RW	x	-	x	-	-	-	-	-	-	-	x	x	-
Salix lasiolepis arroyo willow	D	RW	x	x	x	-	-	-	-	x	-	-	x	-	-
SAURURACEAE - LIZARD-TAIL															
Anemopsis californica yerba mansa	D	R s/a	x	x	x	-	-	-	-	-	x	-	x	-	-
SAXIFRAGACEAE - SAXIFRAGE															
Ribes speciosum fuchsia-flowered gooseberry	O	OW	-	-	-	-	-	-	-	x	-	x	-	x	x
SCROPHULARIACEAE - FIGWORT FAMILY															
Antirrhinum nuttallianum Nuttall's snapdragon	O	Bo	-	-	-	x	-	-	-	x	-	x	-	x	-

[1] Maritime desert scrub.

	Occur-ance	Commun-ity	Aliso Creek 1	Aliso Creek 2	Aliso Creek 3	AWMA 1	AWMA 2	AWMA 3	MM	Wood Canyon 1	Wood Canyon 2	Wood Canyon 3	Wood Canyon 4	Wood Canyon 5	Wood Canyon 6
			Locality												
SCROPHULARIACEAE - FIGWORT FAMILY (cont'd)															
*Kicksia elatine fluellin	U	R-s/a	x	x	-	-	-	-	-	-	-	-	-	-	-
Mimulus aurantiacus orange bush monkey-flower	C	Css	-	-	-	-	x	x	x	x	-	x	x	x	x
Mimulus guttatus yellow monkey-flower	U	RW	-	-	-	-	-	-	-	-	-	-	x	-	-
Orthocarpus purpurascens owl's clover	U	NG	-	-	-	-	-	-	x	-	-	-	-	-	-
Scrophularia californica coast figwort	U	Bo	-	-	-	-	-	-	-	-	-	x	-	-	-
SOLANACEAE - NIGHTSHADE FAMILY															
Datura meteloides jimson weed	O	G,R	x	x	x	-	-	-	-	-	-	-	-	x	-
*Lycopersicon esculentum tomato	U	H	-	x	-	-	-	-	-	-	-	-	-	-	-
*Nicotiana glauca tree tobacco	C	R-bs	x	x	x	-	-	-	-	-	-	x	-	x	-
Solanum douglasii Douglas' nightshade	O	R-bs	x	x	x	-	-	-	-	-	-	x	-	-	-
URTICACEAE - NETTLE FAMILY															
Urtica holosericea creek nettle	C	RW	-	x	x	-	-	-	-	x	x	x	x	x	-

	Occurance	Community	Locality: Aliso Creek 1	Aliso Creek 2	Aliso Creek 3	AWMA 1	AWMA 2	AWMA 3	MM	Wood Canyon 1	Wood Canyon 2	Wood Canyon 3	Wood Canyon 4	Wood Canyon 5	Wood Canyon 6
VERBENACEAE - VERVAIN FAMILY															
Verbena lasiostachys western verbena	O	R	-	x	x	-	-	-	-	-	x	x	-	-	-
AMARYLLIDACEAE - AMARYLLIS FAMILY															
Bloomeria crocea golden stars	O	NG	-	-	-	-	-	-	x	x	-	x	-	-	-
Dichelostemma pulchella wild-hyacinth	O	NG	-	-	-	-	-	?	x	x	-	x	-	-	x
CYPERACEAE - SEDGE FAMILY															
Carex sp. sedge	O	R-j/c	-	-	x	-	-	-	-	-	-	-	-	-	-
Cyperus sp. umbrella sedge	U	R	-	x	-	-	-	-	-	-	-	-	-	-	-
Eleocharis montevidensis slender creeping spike-rush	O	R-j/c	-	-	-	-	-	-	-	x	x	-	-	-	-
Scirpus olneyi Olney bulrush	D	R-fwm	x	x	x	-	-	-	-	-	x	-	-	-	-
IRIDACEAE - IRIS FAMILY															
Sisyrinchium bellum blue-eyed grass	C	NG	-	-	-	-	-	x	x	x	-	x	-	-	-

	Occurance	Community	Aliso Creek 1	Aliso Creek 2	Aliso Creek 3	AWMA 1	AWMA 2	AWMA 3	MM	Wood Canyon 1	Wood Canyon 2	Wood Canyon 3	Wood Canyon 4	Wood Canyon 5	Wood Canyon 6
JUNCACEAE - RUSH FAMILY															
Juncus balticus wire rush	O	R-j/c	-	-	x	-	-	-	-	-	x	x	-	-	x
Juncus mexicanus Mexican rush	D	R-j/c	-	-	x	-	-	-	-	-	x	x	-	-	x
LEMNACEAE - DUCKWEED FAMILY															
Lemna trisulca ivy-leaved duckweed	O	R-fwm	-	x	-	-	-	-	-	-	-	-	-	-	-
LILIACEAE - LILY FAMILY															
Calochortus splendens lilac mariposa	O	NG	-	-	-	-	-	-	x	-	-	-	-	-	-
POACEAE - GRASS FAMILY															
Agrostis diegoensis leafy bentgrass	U	NG	-	-	-	-	-	-	x	x	-	-	-	-	?
*Arundo donax giant reed	O	R-bs	x	x	x	-	-	-	-	-	-	-	-	-	-
*Avena barbata slender wild oat	D	IG	-	-	x	x	x	x	x	x	-	x	x	x	x
*Avena fatua common wild oat	D	IG	-	x	x	x	x	x	x	x	-	x	x	x	x
Bothriochloa barbinodis beard-grass	U	Bg	-	-	-	-	-	-	x	-	-	-	-	-	-
*Bromus diandrus ripgutgrass	D	IG	x	x	x	x	x	x	x	x	-	x	x	x	x

Locality

	Occurance	Community	Aliso Creek 1	Aliso Creek 2	Aliso Creek 3	AWMA 1	AWMA 2	AWMA 3	MM	Wood Canyon 1	Wood Canyon 2	Wood Canyon 3	Wood Canyon 4	Wood Canyon 5	Wood Canyon 6
POACEAE - GRASS FAMILY (cont'd)															
*Bromus mollis soft chess	C	IG	x	x	x	x	x	x	x	x	-	x	x	x	x
*Bromus rubens red brome	O	IG	-	-	-	x	-	-	x	-	-	-	-	x	x
*Cortaderia atacamensis pampas grass	U	H	-	-	-	-	-	-	-	-	-	-	-	-	x
*Cynodon dactylon bermudagrass	O	R-sa	-	-	x	-	-	-	-	-	x	-	-	-	-
Distichlis spicata saltgrass	D	R-sa	x	x	x	-	-	-	-	x	x	-	-	-	-
*Echinochloa crusgalli watergrass	U	R	-	x	x	-	-	-	-	-	-	-	-	-	-
Elymus condensatus giant wild rye	O	Css	-	x	-	-	x	?	x	-	-	x	-	x	-
Elymus triticoides alkali wild rye	D	R-j/c	-	-	x	-	-	-	-	-	-	-	-	-	-
Festuca megalura meadow fescue	U	IG	-	x	-	-	-	-	-	-	-	-	-	-	-
*Gastridium ventricosum nitgrass	U	NG	-	-	-	-	-	-	x	-	-	-	-	-	-
*Hordeum leporinum foxtail barley	C	IG	x	x	x	-	-	-	x	-	-	-	x	x	-
Koeleria macrantha junegrass	U	NG	-	-	-	-	-	-	x	-	-	-	-	-	-

			Locality												
			Aliso Creek			AWMA				Wood Canyon					
	Occur-ance	Commun-ity	1	2	3	1	2	3	MM	1	2	3	4	5	6
POACEAE - GRASS FAMILY (cont'd)															
*Lolium perenne multiflorum Italian ryegrass	U	IG	x	-	x	-	-	-	-	-	-	-	-	-	-
Melica imperfecta small-flowered melica	U	Css	-	-	-	-	-	-	x	-	-	-	-	-	-
Paspalum distichum knotgrass	C	R	x	x	x	-	-	-	-	-	-	-	x	-	-
Pennisetum clandestinum kikuyu grass	O	R	-	x	x	-	-	-	-	-	-	-	-	-	-
*Polypogon monspeliensis rabbit's-foot grass	O	R	x	x	x	-	-	-	-	-	x	-	-	-	-
Stipa pulchra purple needlegrass	D	NG	-	-	-	-	x	x	x	x	-	x	-	x	x
Typha latifolia broad-leaved cat-tail	C	R-fwm	x	x	x	-	-	-	-	-	x	-	-	-	-

4.2 FAUNA

Occurence

O - observed duing 1978 or 1981 field surveys
R - reported by England and Nelson, 1977.
E - expected to occur on site
E?- uncommon species possibly expected

Habitat

FWM - freshwater marsh
RE - open riparian edge
RW - riparian woodland
G - grassland
B - coastal sage scrub or chaparral brushland
OW - southern oak woodland

Status

** sensitive species

AMPHIBIANS

CAUDATA - NEWTS AND SALAMANDERS

Taricha torosa California newt	R (?)	RW
Ensatina eschscholtzi Eschscholtz's salamander	E ?	FWM, RW, OW
Batrachoseps pacificus Pacific slender salamander	E	G, OW
Batrachoseps attenuatus California slender salamander	E	FWM, RW, OW
Aneides lugubris arboreal salamander	E?	OW

SALIENTIA - FROGS AND TOADS

Scaphiopus hammondi western spadefoot	E?	RE
Bufo boreas western toad	E	FWM, RE, RW, B, OW
**Bufo microscaphus southwestern toad	E?	FWM, RW, RE
Hyla regilla Pacific treefrog	O	FWM, RW, RE
**Rana aurora reg-legged frog	E	FWM, RW, RE
Rana catesbeiana bullfrog	O	FWM, RW, RE

Reptiles

CHELONIA - TORTOISES AND TURTLES

**Clemmys marmorata western pond turtle	R	FWM, RW, RE

SQUAMATA - LIZARDS AND SNAKES

Coleonyx variegatus banded gecko	E?	B, OW
Sceloporus occidentalis western fence lizard	R	All
Uta stansburiana side-blotched lizard	R	All
Eumeces skiltonianus western skink	E?	OW
**Cnemidophorus hyperthyrus orange-throated whiptail	E?	RE, RW, OW
Cnemidophorus tigris western whiptail	E?	B, OW
Gerrhonotus multicarinatus southern alligator lizard	R	RW, G, OW
Leptotyphlops humilis western blind snake	E?	RW, B, OW
Lichanura trivirgata rosy boa	E?	B, OW
Diadophis punctatus ringneck snake	E	B, OW
Masticophis flagellum common whipsnape	E	G, B, OW
Masticophis lateralis striped racer	E?	RW, B, OW
Salvadora hexalepis western patch-nosed snake	E?	B
Pituophis melanoleucus gopher snake	R	RW, G, B, OW
Lampropeltis getulus common kingsnake	O	all
Rhinocheilus lecontei long-nosed snake	E?	RW, G, B, OW
**Thamnophis couchi western quatic garter snake	R	FWM, RW, RE
Crotalus ruber red diamond rattlesnake	R	B, OW

Crotalus viridis western rattlesnake	O	RW, G, B, OW

BIRDS

GAVIIFORMES - LOONS

Podilymbus podiceps pied-billed grebe	R	FWM

CICONIIFORMES - HERONS AND ALLIES

**Ardea herodias great blue heron	O	FWM, RW, RE
Butorides virescens green heron	O	FWM, RW, RE
Bubulcus ibis cattle egret	O	G 1976
Nycticorax nycticorax black-crowned night heron	R	FWM
Botaurus lentiginosus American bittern	R	FWM
Branta canadensis Canada goose	E?	FWM, G
Anas platyrhynchos mallard	R	FWM
Anas strepera gadwall	R (offsite?)	FWM
Anas acuta pintail	R (offsite?)	FWM
Anas crecca green-winged teal	R	FWM
Anas cyanoptera cinnamon teal	R	FWM
Anas americana American wigeon	R (offsite?)	FWM

Anas clypeata northern shoveler	R (offsite?)	FWM
Aythya collaris ring-necked duck	R	FWM
Oxyura jamaicensis ruddy duck	R	FWM

FALCONIFORMES - VULTURES, HAWKS, OSPREYS AND FALCONS

Cathartes aura turkey vulture	O	All
**Elanus leucurus* white-tailed kite	O	G
***Accipiter striatus* sharp-shinned hawk	R	RW, OW
***Accipiter cooperii* Cooper's hawk	R	RW, OW
Buteo jamaicensis red-tailed hawk	O	All
***Buteo lineatus* red-shouldered hawk	O	RW
***Buteo regalis* ferruginous hawk	R	G
***Aguila chrysaetos* golden eagle	O	RW, G, B, OW
***Circus cyaneus* marsh hawk	O	G, RW
***Falco mexicanus* prairie falcon	E	G
***Falco sparverius* American kestrel	R	All

GALLIFORMES - GALLINACEOUS BIRDS

Lophortyx californicus California quail	O	B

GRUIFORMES - CRANES, RAILS, GALLINULES AND COOTS

Porzana carolina sora rail	RW, FWM	
Gallinula chloropus common gallinule	RW (offsite?)	FWM, RE
Fulica americana American coot	RE, FWM	

CHARADRIIFORMES - SHOREBIRDS, GULLS AND ALCIDS

Charadrius vociferus killdeer	O	RE
Capella gallinago common snipe	E	FWM
Tringa melanoleuca greater yellowlegs	E?	RE
Tringa flavipes lesser yellowlegs	E?	RE
Calidris minutilla least sandpiper	R	RE
Calidris mauri western sandpiper	R	RE
Calidris alba sanderling	R	RE
Larus occidentalis western gull	R	RE
Larus californicus California gull	R	RE
Larus delawarensis ring-billed gull	R	RE
Larus philadelphia Bonaparte's gull	R	FWM
Columba livia rock dove	O	G (near habitation)

Zenaida macroura mourning dove	O	G,B
Streptopelia chinensis spotted dove	R	G (near habitation)

CUCULIFORMES - CUCKOOS AND ROADRUNNERS

Geococcyx californianus roadrunner	O	G, B
**Tyto alba barn owl	R	RW, G, OW
**Otus asio screech owl	E	RW, B, OW
**Bubo virginianus great horned own	O	RW, OW
**Speotyto cunicularia burrowing owl	R	G
**Asio otus long-eared owl	E?	RW, OW

CAPRIMULGIFORMES - GOATSUCKERS

Phalaenoptilus nuttallii poor-will	E	B

APODIFORMES - SWIFTS AND HUMMINGBIRDS

Chaetura vauxi Vaux's swift	R	G, B
Aeronautes saxatalis white-throated swift	R	G
Archilochus alexandri black-chinned hummingbird	R	RW, B
Calypte costae Costa's hummingbird	R	B
Calypte anna Anna's hummingbird	O	RW, B

Selasphorus rufus rufous hummingbird	E	RW
Selasphorus sasin Allen's hummingbird	O	RW

CORACIIFORMES - KINGFISHERS AND ALLIES

Megaceryle alcyon belted kingfisher	O	RE, RW, FWM
Colaptes auratus common flicker	R	OW, RW
Melanerpes formicivorus acorn woodpecker	R	OW
Sphyrapicus varius yellow-bellied sapsucker	R	RW, OW
Dendrocopos nuttallii nuttall's woodpecker	R	RW, OW

PASSERIFORMES - PERCHING BIRDS

Tyrannus verticalis western kingbird	O	G
Tyrannus vociferans Cassin's kingbird	R	G
Myiarchus cinerascens ash-throated flycatcher	O	RW, OW
Sayornis nigricans black phoebe	O	RE, RW, FWM
Sayornis saya Say's phoebe	O	G
**Empidonax traillii willow flycathcer	E?	RW, FWM
Empidonax difficilis western flycatcher	R	RW, OW
Contopus sordidulus western wood pewee	R	RW, OW

Tachycinetta thalassina violet-green swallow	R	FWM
Iridoprocne biocolor tree swallow	R	FWM
Stelgidopteryx ruficollis rough-winged swallow	R	FWM
Hirundo rustica barn wallow	R	FWM, G (around habitation)
Petrochelidon pyrrhonota cliff swallow	O	FWM, RE, RW, G
Aphelocoma coerulescens scrub jay	O	RW, B, OW
Corvus corax common raven	O	B, G
Corvus brachyrhynchos common crow	R	G and around habitatin
Parus inornatus plain titmouse	E	OW, RW
Psaltriparus minimus bushtit	O	RW, B, OW
Chamaea faaciata wrentit	R	B
Troglodytes aedon house wren	O	RW, OW
**Thryomanes bewickii Bewick's wren	R	RW, OW
Campylorhynchus brunneicapillus cactus wren	O	B
Telmatodytes palustris long-billed marsh wren	O	FWM
Mimus polyglottos mockingbird	O	RW, G, B, Ow, around habitation
Toxostoma redivivum California thrasher	O	B
Oreoscoptes montanus sage thrasher	R	B

Turdus migratorius America robin	R	RW, OW
Catharus guttatus hermit thrush	R	RW, OW
Catharus ustulatus Swainson's thrush	E	RW, OW
Sialia mexicana western bluebird	E	RW
Polioptila caerulea blue-gray gnatchatcher	E	TW, B, OW
**Polioptila melanura black-tailed gnatcatcher	E	B
Regulus satrapa golden-crowned kinglet	R	RW, OW
**Regulus calendula ruby-crowned kinglet	R	RW, OW
Bombycilla cedrorum cedar waxwing	R	RW, B, OW
Phainopepla nitens phainopepla	O	RW
**Lanius ludovicianus loggerhead shrike	O	FWM, G
Sturnus vulgaris starling	O	RW, around habitation
Vireo huttoni Hutton's vireo	R	OW
Vireo solitarius solitary vireo	E?	RW, OW
Vireo gilvus warbling vireo	R	RW, OW
Vermivora celata orange-crowned warbler	R	RW, OW
Vermivora ruficapilla Nashwille warbler	R	RW, OW
**Dendroica petechia yellow warbler	R	FWM, RW, OW

Dendroica nigrescens black-throated gray warbler	R	RW, OW
Dendroica coronata yellow-rumped warbler	R	RW, B, OW
Dendroica townsendi townsend's warbler	R	RW, OW
Dendroica occidentalis hermit warbler	E	RW, Ow
Geothlypis trichas common yellowthroat	O	FWM
Wilsonia pusilla Wilson's warbler	R	FWM, Rw, Ow
Passer domesticus house sparrow	O	RW, B around habitation
Sturnella neglecta western meadowlark	O	G
Xanthocephalus xanthocephalus yellow-headed blackbird	R	FWM
Agelaius phoeniceus red-winged blackbird	O	FWM
**Aegelaius tricolor tricolored blackbird	R	FWM
Icterus cucullatus hooded oriole	E	RW, around habitation
Icterus galbula northern oriole	O	RW, OW
Euphagus cyanocephalus Brewer's blackbird	O	RE, FWM
Molothrus ater brown-headed cowbird	O	G
Piranga ludoviciana western tanaer	R	RW
Pheucticus melanocephalus black-headed grosbeak	E	OW, B
**Guiraca caerulea blue grosbeak	R	FWM, RE, RW

Passerina amoena Lazuli bunting	E	RW, G, B
Carpodacus mexicanus house finch	O	All
Spinus tristis American goldfinch	R	RE, RW, G
Spinus psaltra lesser goldfinch	O	RE, RW, B, G, OW
Pipilo erythrophthalmus rufous-sided towhee	O	OW, B
Pipilo fuscus brown towhee	O	B, RW, OW
Chondestes grammacus lark sparrow	O	RW, G
Passerculus sandwichensis savannah sparrow	R	G, B
Pooecetes gramineus vesper sparrow	E?	B
Aimophila ruficeps rufous-crowned sparrow	E?	B
Amphipiza belli sage sparrow	E	B
Junco haemalis dark-eyed junco	R	RW, B, OW
Spizella passerina chipping sparrow	E?	G, around habitation
Zonotrichia atricapilla golden-crowned sparrow	R	RW, B, OW
Zonotrichia leucophrys shite-crowned sparrow	R	All
Passerella iliaca fox sparrow	R	RW, B, OW
Melospiza lincolnii Lincoln's sparrow	R	RW, B, OW
Melospiza melodia song sparrow	O	RW, FWM

MAMMALS

MARSUPIALIA - POUCHED MAMMALS

Didelphis virginiana Virginia opossum	R	All

INSECTIVORA - INSECT EATERS

Sorex ornatus ornate shrew	E	All
Notiosorex crawfordi desert shrew	E	B

CHIROPTERA - BATS

Myotis lucifugus little brown bat	E	All
Procyon lotor raccoon	O	RE, RW
Mustela frenata long-tailed weasel	E	FWM, RE, RW
Taxidea taxus badger	E	G
Spilogale gracilis spotted skunk	E	B, OW
Mephitis mephitis striped skunk	E	RW, G, B, OW
Canis latrans coyote	O	All
Urocyon cinereoargenteus gray fox	E	All
****Felis concolor* mountain lion	R	All
Lynx rufus bobcat	O	All

RODENTIA - GNAWING MAMMALS

Spermophilus beecheyi California ground squirrel	O	G, B
Thomomys bottae Botta pocket gopher	O	G, RW, OW
**Perognathus longimembris little pocket mouse	E	B
Perognathus fallax San Diego pocket mouse	E?	RE (sand)
Perognathus californicus California pocket mouse	E?	B, OW
Dipodomys agilis pacific kangaroo rat	O	B
Reithrodontomys megalotis western harvest mouse	E	RE, G, RW, FWM
Peromyscus eremicus cactus mouse	E?	B
Peromyscus californicus California mouse	E	OW, B
Peromyscus maniculatus deer mouse	E	All
Neotoma lepida desert woodrat	O	B
Neotoma fuscipes dusky-footed woodrat	E	OW, B, RW
Microtus califonicus California vole	O	G
Mus musculus house mouse	E	G, around habitation

LAGOMORPHA - HARES AND RABBITS

Lepus californicus black-tailed hare	R	G, B
Sylvilagus audubonii desert cottontail	O	All

Sylvilagus bachmani brush rabbit	E	B

ARTIODACTYLA - EVEN-TOED HOOFED MAMMALS

Odocoileus hemionus mule deer	O	All (especially OW and RW)

ALISO VIEJO PUBLIC FACILITIES

ADDENDUM TO BIOLOGICAL ASSESSMENT

REPORT

PREPARED FOR

LIDYOFF/HOURIAN
Landscape Architecture and Planning
777 South Main Street, Suite 170
Orange, California 92668

BY

KARLIN MARSH
Biological Consultant

September 18, 1981

On July 30, 1981, a field trip was conducted to familiarize key agency personnel with park planning activities within the Aliso Viejo Greenbelt. The following individuals participated in the field trip:

- Renée Robbins - California Coastal Conservancy
- Ruth Galanter - California Coastal Conservancy
- Steven Kimple - California Fish & Game Department
- Daniel Turner - Orange County Environmental Management Agency
- Grace Seketa - Orange County Environmental Management Agency
- Eric Jessen - Orange County Environmental Management Agency
- Richard Watson- Jack Raub Company
- Phil VanderToolen- Lidyoff/Hourian
- Karlin Marsh - Biological Consultant

Positions and opinions expressed by agency personnel, particularly Steven Kimple, necessitated a reexamination of certain portions of the Greenbelt development plan. The following is a summary of agency commentary and an analysis of the feasibility of suggestions advanced, plus a biological inventory of alternative use sites identified.

1. Aliso Creek Habitat Protection

Kimple stated that his agency would comment in opposition to recreational development on both sides of Aliso Creek. Kimple stressed that the natural quality of the streamcourse was unique and that stream valley habitat should be pro-

tected. He believed that with removal of grazing pressure, that opportunities would exist for natural-succession habitat restoration.

Jessen discussed the probability that the streamcourse once was lined by a sycamore woodland, subsequently timbered during the early European settlement period.

Kimple recommended that the equestrian trail parallel the bike and shuttle way, and that no recreational development be placed on the east side of the creek. Robbins expressed concern that passing shuttle busses would startle horses if the trails were close together.

Jessen recommended the planting of a sycamore woodland along the length of the creek.

Discussion

The author shares the concerns expressed by Robbins. If the trails were parallel or close to eachother, a vegetation screen could be planted in between to partially mitigate potential problems related to equestrian use and safety, however.

A concentration of uses would, as Kimple correctly asserted, allow large areas of the valley to function as wildlife habitat. The planting of reparian trees and shrubs would enhance the recovering indigenous setting. Although sycamores might not be able to tolerate the high salinity/alkalinity regime within the floodplain, other shrub and tree species, particularly willows and elderberries should establish well.

Concentration of facilities will however, detract from the park user recreational experience. Safety aspects to horseback riders may not be fully mitigated by the aforementioned tree and shrub screen. Because the farm road designated as an equestrian trail would remain visible for many years, unregulated equestrian use could be predicted, as pointed out by conservancy representatives. Kimple countered-

that while some unregulated use was expected, the level of use would be much less than if the trail were officially designated and the picnic ground amenity provided.

Biological Assessment

No sensitive biological resources appear to be present on the west stream terrace of Aliso Creek between the AWMA Bridge and the mouth of Wood Canyon, except near the margins of the stream. The reaminder is vegetated by introduced grassland species and by goldenbrush shrub. It is predicted that the latter community will become even more extensive, once cattle are removed.

There appear to be no biological constrains to the placement of equestrian facilities and trails between the existing AWMA Road and Aliso Creek, except near the margins of the stream itself. However, west of the AWMA Road near the toe of the Sheep Hills are several localities of the rare and endangered Orange County Turkish Rugging, (chorizanthe staticoides ssp. chrysacantha). All of these are contiguous to rock outcrops on fairly steep slopes. Any trail or facilities constructed should avoid these areas.

2. Lower Wood Canyon Facilities Clustering

Kimple expressed concern about the degree of development proposed for Wood Canyon and had specific comments regarding certain recreational sites. He stated that clustering recreational and ranger headquarters facilities in central Wood Canyon would substantially impact and denigrate the wildlife habitat within the drainage corridor. A reevaluation of development concepts was necessitated by concerns expressed by Kimple and previously and subsequently voiced for various reasons by the Orange County Environmental Management Agency and by Watson of Jack G. Raub Company.

It appears that there may be a majority consensus of opinion for relocating centralized facilities to the mouth of Wood Canyon, and scaling down recreational planning within the upper watershed.

Discussion

Placement of facilities at the mouth of Wood Canyon would be advantageous from several standpoints.

1) It would allow for greater public accessibility to amenities provided, particularly if the site is made a shuttle bus stop. It is additionally recommended that the shuttle bus stop at the Big Bend picnic area. Amenities would include informational and interpretive services, law enforcement protection, drinking fountains and restroom facilities.
2) It would allow for a more centralized supervisory facility for recreational activities in both Wood Canyon and the Aliso Creek Valley.
3) It would permit the phasing of recreational development, with Aliso Creek facilities implemented at an earlier stage than those in upper Wood Canyon.
4) It would permit access, supervision and control of use of upper Wood Canyon. Wood Canyon above the Ranger Station could be closed during the high fire hazard season, satisfying a concern expressed by Jack G. Raub Company representatives.
5) Clustering of facilities near the mouth of the Canyon would ameliorate impacts on the habitat of the upper canyon, satisfying California Fish & Game concerns.

Disadvantages of siting a concentration of facilities at the mouth of Wood Canyon include the following.

1) Wildlife dispersion routes between upper Wood Canyon and Aliso Creek might be severed. Deer in a bedding area above the proposed visitor center would be disturbed and forced to move to other habitats.
2) Other access points to Wood Canyon from the Aliso Viejo development area and from offsite development above Mathis Canyon, would not be controlled or supervised. This would be of particular concern during the fire season.

3) Recreational use within upper Wood Canyon would not be regulated, nor would the protection of a law enforcement and rescue facility be provided to upper Canyon visitors.

4) Infrastructure (water, electicity) would not be as readily available on the short term (prior to Aliso Viejo buildout) as it would be at the up-Canyon sites. It might be advantageous therefore on a cost basis to use on-site, highly mineralized water for purposes other than drinking, to truck in drinking water, and to generate electricity on site, utilizing trucked-in gasoline or propane. The sunny location of the site would make the use of solar power for structure and water heating an attractive option.

To ameliorate some of the other disadvantageous aspects of a Canyon-mouth facility, it is recommended that a tributary ranger station and a ranger residence be established in the general area previously designated, near the confluence of Wood and Corral Canyon.

Proposed Ranger Station

Biological Assessment

A biological survey of the site of the porposed canyon-mouth ranger station was conducted on August 27, 1981. The paragraphs below summarize the findings of that survey.

The proposed location of the visitor center and headquarters building is on the west side of the Wood Canyon farm road, in a flat area, part of which is presently occupied by a corral. The site is flanked by a backdrop of brushy slopeland with many rock outcrop exposures.

A portion of the flat is subject to continual impact from equestrian and cattle trampling. This area is vegetated by a variety of ruderals, including tumbleweed (Amaranthus albus), cheeseweed (Malva parviflora), tall horseweed (Conyza canadensis) and telegraph weed (Heterotheca grandiflora), along with patches of Bermuda grass (Cynodon dactylon), coyote melon (Curcubita foetdissima) and some Mexican milkweed (Asclepias fascicularis) and mock black nightshade (Solanum nodiflorum). Forage grasses in this area were trampled beyond recognition.

Away from the impact area, the flat contains a 50:50 mix of coastal goldenbrush (Haplopappus venetus) and introduced annual grasses, mainly ripgut brome (Bromus diandrus) and common wild oats (Avena fatua). Other species of plants inventoried on the less disturbed portions of the flat include doveweed (Eremocarpus setigerus), foxtail barley (Hordeum leporinum), ragweed (Ambrosia psilostachya) and prickly lettuce (Lactuca serroila).

Some moisture indicator species are present in fairly small numbers. These include Mexican elderberry (Sambucus mexicanus) alkali heliotrope (Heliotropium curassavicum), and mulefat (Baccharis glutinosa). It can thus be surmised that the site contains fairly moisture retentive soils, (the presence of coastal golden-

brush is a further indication of this condition), and that the area is subject to very sporadic swampy conditions during the rainy season. This condition, it should be noted, is not nearly as severe as it is in the north branch of Mathis Canyon at the proposed campground site. However, facilities design should take into account the possibility of a seasonal ground water problem. The importation and placement of gravel fill, to raise building pads slightly above surrounding grade is a cost factor to be taken into account in developing an evaluation matrix of visitor center/ ranger station site alternatives.

The lower portion of the backdrop slope behind the proposed facility contains introduced grassland. Above, this community is replaced by coastal sage scrub. Many outcrop exposures provide aesthetic variety in the visual texture of the backdrop. To the south, a narrow, coastal chaparral filled canyon drops to the valley floor. Upper slopeland vegetation consists of the following coastal sage scrub, rock outcrop and coastal chaparral species:

Coastal Sage Scrub:

California buckwheat	-	(Eriogonum fasciculatum)
White sage	-	(Salvia apiana)
Black sage	-	(S. mellifera)
Black-white sage hybrids	-	(S. apiana X mellifera)
Western prickly pear	-	(Opuntia "occidentalis" X)
Chaparral bedstraco	-	(Galium angustifolium)
Glandular cudweed	-	(Corethrogyne filaginifolia)
California sagebrush	-	(Artemisia californica)
Purple needlegrass	-	(St. pa pulchra)
Foothill needlegrass	-	(S. lepida)
Lemonadeberry	-	(Rhus integrifolia)
Elongate buckwheat	-	(Eriogonum elongatum)

Bush mallow	-	(Malacothamnus fasciculatus)
Paintbrush	-	(Castilleja sp.)
Wild hyacinth	-	(Dichelostemma puchella)

Rock Outcrop Zone

Rock outcrops behind the ranger station proposed site are potential localities for two rare and endangered plant species, Orange County turkish rugging and many-stemmed dudleya (dudleya multicaulis). Documented sites of the former species are located nearby, at the toe of the Sheep Hills and on rock outcrop exposures flanking the AWMA Road at the cattle guard just south of the mouth of Wood Canyon. Both species are vernally evident, with only bits of dead remnants available for analysis in late summer. No such remnants were found but the possibility is great that one or both taxa are present around some of the outcrops.

Species actually located and inventoried include the following:

Pine goldenbush	-	(Haplopappus pinifolius)
Fragrant everlasting	-	(Gnaphalium beneolens)
Saltgrass	-	(Distichlis spicata)
Orange bush monkeyflower	-	(Diplacus aurantiacus)
Tarweed	-	(Hemizonia sp.)
Sapphire eriastrum	-	(Eriastrum sapphirinum)
Sand mat	-	(Cardionema ramosissima)
Slender woolly eriogonum	-	(Eriogonum gracile)

Ravine Flora

The narrow ravine which bisects the slopeland southwest of the ranger station site is vegetated by a heavy cover of coastal chaparral shrubs: lemonadeberry and toyon (Heteromeles arbutifolia), along with California sagebrush, giant rye grass (Elymus condensatus), orange bush, monkey flower and poison oak (Toxicodendron radicans ssp. diversilobum).

Most of the fauna observed in the vicinity of the proposed ranger station were in the surrounding uplands, though a roadrunner (Geococcyx californianus) and evidence of meadow mice (Microtus californicus) were seen on the flat. The most remarkable aspect of the fauna setting is the large amount of deer evidence on the upper brushy slopeland. Many dropping sites and bedding areas were seen here. The location of these deer areas were in sites providing excellent view points of the surrounding slopes and the flats below. The floor of Wood Canyon probably functions as a deer dispersion route, and the slopeland above as a foraging and resting area where the approach of predators can be monitored. Location of the ranger station on the flat below will result in a human use level of sufficient disturbance to force deer occupying the upper slopeland to move to other sites. Its effect on the theorized dispersion corridor is not known. Fortunately, human activities around the station would be within a diurnal time frame, while faunal use of the corridor would be mainly nocturnal.

Other fauna or fauna evidence observed on the slopes included Audubon cottontail rabbits (Sylvilagus audubonii), coyotes (Canis latrans) and birds such as wrentits (Chamaea fasciata), scrub jays (Aphelocoma coerulescens) and a roadrunner. Many other bird species undoubtedly visit the brush habitat but were not in evidence during the very hot survey period.

If the ranger station - visitor center is located on the flat at the mouth of Wood Canyon, the slopeland environment would be an ideal and convenient site for an interpretive nature trail. The variety of habitats and species on this slopeland afford the visitor an excellent opportunity to become acquainted with the biota of Aliso Viejo's hill country. Impact on resident deer feeding groups would probably be no greater than the impact of placing the facility structure below. However, the habitat should be monitored, and if there continued to be evidence of deer use, trail use should be limited or prohibited, especially during the fawning season.

3. Cave Rock Canyon Recreational Area

Mr. Kimple suggested the development of the floor of lower Cave Rock Canyon, on the west side of lower Wood Canyon as a picnic/camping facility near the relocated ranger facility. A preliminary examination of Cave Rock Canyon revealed that its deeply downcut tributary watercourse effectively barred ingress on potentially sensitive up canyon chaparral and oak woodland habitat, and additionally protected coastal sage scrub vegetation on the south slope. The remaining site lacks aesthetic appeal, and landscaping would be needed to create an attractive setting for camping and picnicking. Its present vegetation consists predominantely of coastal goldenbrush and ripgut brome. The downcut watercourse presents a potential safety hazard and should be fenced.

Biological Assessment

On August 27, 1981, lower Cave Rock Canyon was surveyed for biological resources and areas of biological sensitivity.

The floor of the lower canyon is flat and is vegetated by the aforementioned grass-goldenbrush mix. The upper portion of the floor contains much less goldenbrush than does the lower. In addition to the codominants, canyon floor flora consists of summer mustard (*Brassica geniculata*), ragweed, coyote melon, some common wild oats, common cocklebur, jimson weed (*Datura meteloides*) and horehound (*Marrubium vulgare*).

The aforementioned, deeply downcut stream channel contains a dense border of coastal goldenbush, two specimen Mexican elderberries, tree tobacco (*Nicotiana glauca*), mugwort (*Artemisia douglasiana*), phacelia (*Phacelia cs. circutaria*) and poison oak. The lower stream course is not aesthetically attractive at present, but its margins represent an opportunity area for habitat enhancement and attractive rustic fencing.

The only easy entry point into the stream bottom is a cattle train at the upper apex of the canyon mouth flats. This trail drops into the channel and continues upstream through dense poison oak. The upper canyon contains coastal chaparral, mainly

lemonadeberry. Slopes to the north of the canyon flats are coastal sage scrub vegetated. Black sage is the dominant species within the association here. California buckwheat and California sagebrush are other common plants. Exposed rock outcrops are fringed with Bigelow spike moss (Selaginella bigelovii). The ridge top above is capped by lemonadeberry bushes.

Slopes to the south of the canyon floor contain a mix of coastal sage scrub and coastal chaparral except toward the canyon mouth. Here are the visually significant Cave Rocks, massive sandstone-type boulders containing at least one narrow ledge cave. These geologic features are surrounded by an oak-savanna, with scattered, mature coast live oak trees (Quercus agrifolia) in a wildflower bedecked grassland.

Characteristic plant species found on the outcrops or at their margins, include California fuchsia (Zauchsneria californica), Nuttall's snapdragon (Antirrhinum nuttallianum), desert savior (Dudleya lanceolata), polypody ferns (Polypodium californicum), goldentop grass (Lamarckia aurea), Bigelow spike moss, California plantain (Plantago erecta), fluffweed (Filago californica) and stephenomeria (Stephenomeria sp.). Many stemmed dudleya appropriate here, was not found.

Within the savanna, ripgut brome is the dominant grass. Masses of lupine (Lupinus spp.), owls clover (Orthocarpus purpurascens), clarkia (Clarkia spp.), pink (Silene sp.) and smooth cat's ear (Hypochoeris glabra) flowers add hues of blue, fuchsia, pink and yellow in spring. In the shade of the oak trees grow phacelias, monkey flowers, milk thistle (Silybum marianum) and chaparral bedstraw.

The outcrop zone and surrounding oak savanna are vulnerable to human overuse. The placement of a picnic and/or camping facility on the flat below will certainly encourage use of this area, despite the presence of the downcut grilly separating it from the facility site, (One needs only to use the existing farm road-trail, to cross this impediment). Aesthetic impacts (from littering, rock defacement and trampling) as well as biological, can be predicted. Educational signing might help to mitigate

adverse impacts, though the worst type of violator would probably ignore their message. A safety hazard related to the ledge cave also exists: the potential for getting stuck or tightly wedged in its narrow confines.

Fauna or evidence of fauna observed in the overall site include brown towhees (Pipilo fuscus), house finches (Carpodacus mexicanus), wrentits, bushtits (Psaltiparus minimus), an unidentified lizard on the rocks, an unidentified snakeskin in goldenbush scrub on the canyon floor, Botta pocket gopher (Thomomys bottae). Workings in the savanna and copious scat evidence of coyotes on the rocky floor of the high ridge point above the oak savanna.

3. Scaled Down

Upper Wood Canyon Facilities

A. Dripping Cave Canyon. Because of its proximity to Mallard Marsh and to sensitive mesic slope habitats in the upper tributary, Kimple recommended that facilities planned for Dripping Cave Canyon be scaled down or deleted. It is the author's opinion that access could be provided into lower Dripping Cave Canyon without unduly impacting the marsh habitat and that a scaled down facility in the designated area could be feasible. Dripping cave Canyon is an important aesthetic resource and while unregulated use or overuse could exert undesirable impact, provisions ought to be made to allow the park visitor to enjoy the setting. The canyon, together with Mallard Marsh would be an ideal site for winter interpretive activities and hikes.

B. Ranger Station Alternative Site. An alternative location for a central Wood Canyon Ranger Station had been selected by Lidyoff/Hourian. This site provides for better supervision of Mathis Canyon than the previously designated locale. It consists of a level grass area on the east side of the farm road opposite the confluence of the Wood and Corral Canyon drainages and the designated camping facility. The area is flanked and framed by coastal sage scrub slopes and is at the mouth of a small hidden canyon. Kimple suggested that this lateral canyon above the new ranger station site might be ideal for camping and picnicking. The narrow canyon was examined and found to be suitable for a very limited camping facility, providing a scale and intimacy lacking in previously examined campsites. It is a box canyon abruptly terminating against the steep slope of the Sheep Hills, and contains some elderberry reparian brush near its head. Coastal sage scrub flanks the grassy canyon floor, necessitating the use of the siteas a "cold camp". (Group cooking facilities could be provided at the canyon mouth).

Biological Assessment

On August 27, 1981, the Lidyoff/Hourian proposed ranger station/ranger residence site was surveyed, along with flanking slopes on the north and south. The narrow lateral canyon above was not rescrutinized, because it was subsequently decided that camping facilities would not be considered here within early development phasing.

The flat area at the lateral canyon mouth is vegetated by introduced grasses and some forbs, plus a few coastal goldenbushes near the farm road. Principal species identified included ripgut brome, common wild oats, Russian thistle (Salsola iberica), summer mustard, soft chess (Bromus mollis), foxtail barley, doveweed (Eremocarpus setigerus), prickly lettuce, coyote melon and windmill pink (Silene gallica).

The slope backdrop to the north east is vegetated by coastal sage scrub, principally California buckwheat, and some black sage. To the southeast, on the opposite side of the lateral canyon, the lower slope contains an immense live oak tree, with a spread probably exceeding one hundred feet, and above, a second, smaller oak.

The noontime survey period was poor for wildlife observation. However, several turkey vultures (Carthates aura) were seen soaring along the ridge top above, and a spotted towhee (Pipilo erythropthalmus) foraging beneath the large oak tree.

C. Mathis Canyon. Kimple questioned the desirability of having separate picnic and camping areas in Mathis Canyon, suggesting one multiple use facility. Comments were made by several field trip participants with respect to location of facilities in the designated, low aesthetic value sites. The general consensus was that visitors would independently select more appealing camp and picnic sites in the wooded upper canyon. Such use, whether or not it is designated, will of course have adverse impacts on sycamore and live oak specimens and on the value of the forested habitat.

Robbins informed the group that upper Mathis Canyon outside Aliso Viejo was going to be dedicated open space, but flanked by development. Hence the potential for substantial use of this biologically sensitive drainage is quite great, and will require careful trail planning and close use supervision. The population of pitcher sage (Salvia spathacea), occurring here in a disjunct southern locale must, in particular be protected.

4. Moulton Meadows. After reviewing the sensitive biotic resources of Moulton Meadows, the study group appeared to be in consensus with the author, that the recreational site here should be scaled down from a day camp facility to a small trailhead picnic area, sited carefully at the junction of the existing farm road into the Aliso Creek Valley, and the ridgetop fire road.

NOAA COASTAL SERVICES CENTER LIBRARY
3 6668 14109 6927