SB
483
.W47
P35
1988

AUTHENTICATED
U.S. GOVERNMENT
INFORMATION
GPO

PALISADES PARK PLAN

TOWN OF WEST NEW YORK

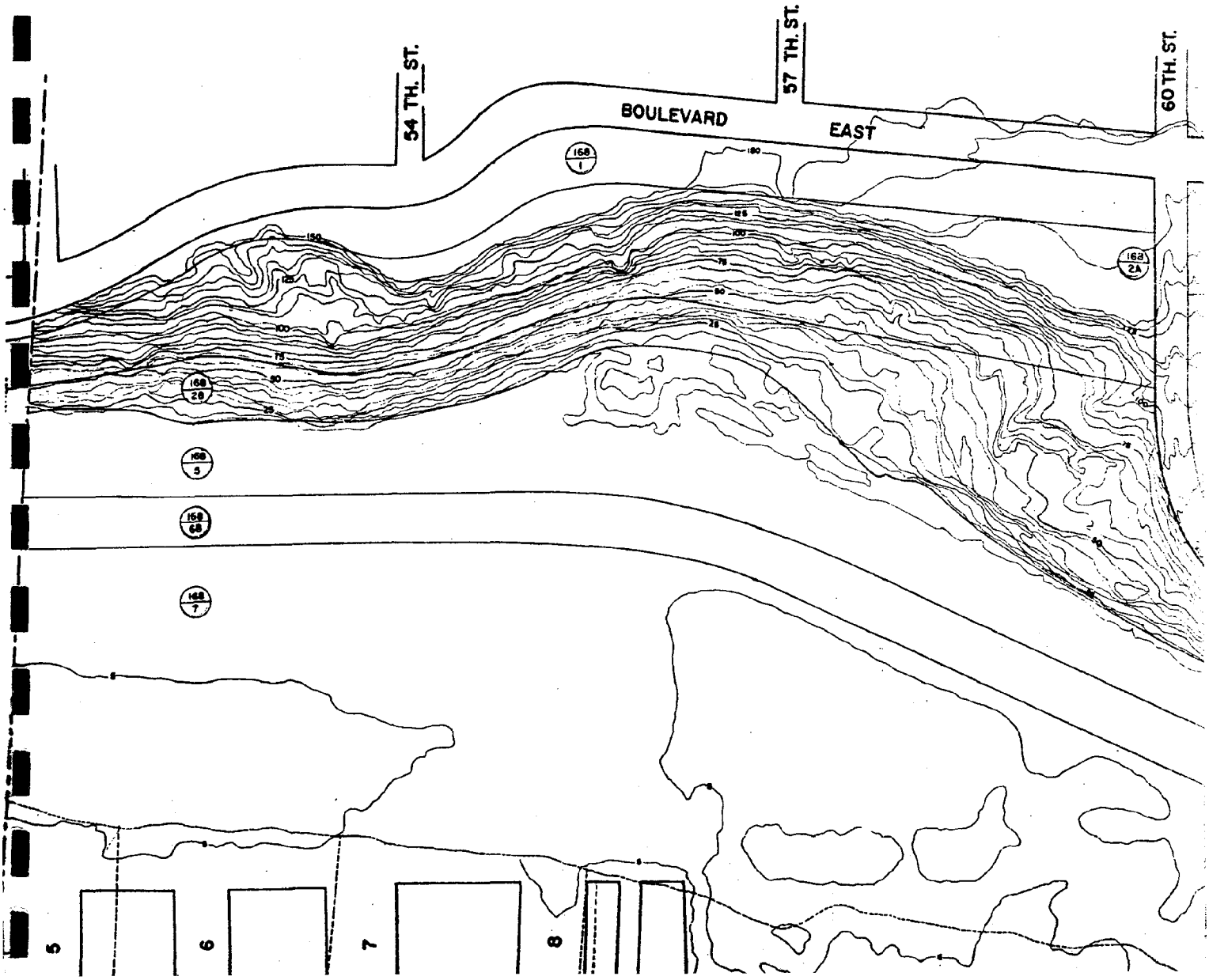

U.S. DEPARTMENT OF COMMERCE NOAA
COASTAL SERVICES CENTER
2234 SOUTH HOBSON AVENUE
CHARLESTON, SC 29405-2413

6728

PALISADES PARK PLAN
TOWN OF WEST NEW YORK, NJ

HON. ANTHONY M. DEFINO, MAYOR

THROUGH A GRANT FROM
NEW JERSEY DEPARTMENT OF
ENVIRONMENTAL PROTECTION
DIVISION OF COASTAL RESOURCES
BUREAU OF PLANNING AND PROJECT REVIEW

Property of CSC Library

David Spatz 1/11/88

COMMUNITY HOUSING & PLANNING ASSOCIATES, INC.
David Spatz, AICP, P.P., NJ License No. 3455

OCT 15 1991

This report was prepared under contract with the New Jersey Department of Environmental Protection, Division of Coastal Resources, Bureau of Planning and Project Review with the financial assistance of the United States Department of Commerce, National Oceanic and Atmospheric Administration, Office of Ocean and Coastal Resource Management under the provisions of the federal Coastal Zone Management Act, P.L. 92-583, as amended.

BOARD OF COMMISSIONERS

Anthony M. DeFino, Mayor

Mario R. Hernandez

James F. Langan

Lawrence Riccardi

Luis Suarez

CONTENTS | PAGE

Introduction	1
Location of Study Area	1
Ownership	2
Existing Use Element	3
Donnelly Park	4
Veteran's Park	4
Palisades Site	5
Environmentally Sensitive Locations	5
Socially Valuable Locations	7
Physically Constraining Locations	8
Proposed Use Element	9
Veteran's Park	9
Donnelly Park	10
Palisades Site	12
Implementation Element	14
Construction/Rehabilitation Costs	14
Management/Maintenance Issues	14
Funding Sources	19
State Regulation Consistency Element	21

EXHIBITS | Following Page

Location of Study Area	2
Photographs	8
Design Elements	13
Site Location	34
Land Use	34
Palisades Park Plan	34

INTRODUCTION

The West New York Palisades Park Plan will develop a strategy to allow the Town of West New York to create a unified and improved park system along the top of the Palisades cliffs and to provide access to the Hudson River waterfront. The Plan consists of four major elements: Existing Use; Proposed Use; Implementation; and State Regulation Consistency, which outlines the consistency of the Plan with the Rules on Coastal Resources and Development (N.J.A.C. 7:7E-1.1).

The Town of West New York has a well developed park system, however, as with many densely populated urban areas, there is a shortage of recreation facilities. The existing parks along the Palisades provide passive and active recreation facilities and a magnificent and unparalleled view of the Hudson River and New York City skyline. A large portion of this area is currently undeveloped and as these parks serve as neighborhood, community and regional facilities, their improvement is greatly needed.

Location of Study Area

West New York's waterfront extends across the entire width of the Town, a distance of approximately 4,900 feet along the Hudson River, from the Township of Weehawken (at 51st Street) at its southern boundary to the Town of Guttenberg (at 68th Street) at the north. As delineated on the Town's Zoning Map as the Controlled Waterfront Development District, the waterfront extends from Boulevard East on the west to the pierhead line in the Hudson River on the east.

As shown on the accompanying map entitled, SITE LOCATION, the Study Area is located along Boulevard East from 51st Street on the south to 60th Street on the north. The area consists of two Tax parcels, known as Lots 1 and 2A in Block 168, with a combined area of 15.68 acres; these parcels are described in greater detail in the followng section on ownership.

Ownership

The Study Area is comprised of two parcels in separate ownership. Lot 1 in Block 168, which has frontage on Boulevard East, is owned by the Hudson County Park Commission and is developed with Donnelly and Veteran's Parks. Lot 2A in Block 168, located to the east of Lot 1, with frontage on Hillside Road, is owned by the Town of West New York and is partially developed with the Town's Panorama Swim Club. Lot 1 has an area of 4.24 acres and the Town owned Lot 2A has an area of 11.44 acres.

As shown on the table contained on the SITE LOCATION map, these two parks comprise 13% of the total 187.45 acres of waterfront land, with 85% of the total, or 156 acres, owned by ARCORP Properties. The relationship of the Study Area to the ARCORP site will be discussed in a following section of this report.

LOCATION OF STUDY AREA

TOWN OF WEST NEW YORK, N.J.

CHPA

0 3301000 2000 4000 ft

EXISTING USE ELEMENT

The following discussion on land use is divided into two sections: overall development of the Study Area and surrounding properties and the specific development of the Study Area. The Study Area is developed with three recreation facilities: Donnelly Park, Veteran's Park and the Panorama Swim Club; the major portion of the Panorama site is in a natural overgrown state. The remainder of the waterfront area (primarily owned by ARCORP Properties), located to the east of the Study Area and east of Hillside Road, is generally undeveloped, with the exception of a narrow private road, a yacht berth and accessory landscaping and parking facilities.

The properties opposite the Study Area, on the western side of Boulevard East are residentially developed. The properties from 51st Street to 56th Street contain one, two and three family structures, with the remaining parcels, north to 60th Street, developed with multi-family buildings; these include the 300 unit Parkview Gardens public housing project.

The remaining portion of the waterfront area is located between Boulevard East and Hillside Road, from 60th Street north to the Town of Guttenberg boundary at 66th Street. The parcels at the southern and northern ends of this area are developed with highrise apartments including a 60 unit building, the 421 unit Riviera Towers, the 196 unit Tower West and the 282 unit Versaille apartments. The area between this development contains several Town owned parks (Liberty/Skyline, Verrazano and Auf Der Heide) and the West New York sewage treatment plant on Hillside Road. These parks contain a variety of recreation facilities including a softball field, tennis courts, basketball courts, tot lots and passive sitting/viewing areas.

As noted above, the Study Area is comprised of three existing parks. These recreation facilities, also shown in the accompanying photographs, are described in detail as follows:

Donnelly Park

This park, which is located on the eastern side of Boulevard East, from approximately 54th Street to 60th Street, contains a mix of active and passive recreation facilities. The northernmost area is primarily for passive use with paths and benches. The middle portion of the park contains the active play areas, which include two basketball courts, four sets of swings, climbing apparatus, a slide, three "spring horses" and a balance beam; in addition, there are three tables with inlaid chess/checker boards. This area gets a wide use from various age groups. The southernmost area contains an open-sided pavillion structure that is generally underutilized. There is a lower terrace area that appears to be rarely used for recreation activities; this area has access to the base of the pavillion, which is currently used for park storage but could be used for expanded recreation purposes. More critical to this study, the terrace area provides access to the Palisades, with overgrown steps that appear to provide access to the base of the Cliffs.

Veteran's Park

This facility, which extends from 54th Street south to the Weehawken boundary, is primarily for passive use. The AmVets Building, which is used as a meeting room, is located at the northernmost portion of the

park, with the remainder containing paths and benches.

Palisades Site

The major facility in the Study Area is this 11.4 acre site located along and within the cliffs, with direct access to Hillside Road. The northernmost portion of the site is developed with the Town's Panorama Swim Club which consists of a swimming pool, diving pool, deck area and maintenance/concession building; in addition, there is off street parking for four vehicles.

The remaining, larger portion of this site is undeveloped and consists of the cliff, which is covered with a variety of vegetation; there do not appear to be any specimen trees in this area, nor any exposed rock face. The stairways noted in the discussion of Donnelly Park, appear to extend down the cliffs in the southern portion of this site; in addition, there are several ledge areas which could provide sitting or viewing areas in an improved park facility. The base of the cliffs, which is on the ARCORP Properties site appears to be wetlands, which will have to be addressed in terms of access to the Hudson River.

Environmentally Sensitive Locations

Within the Study Area, the Palisades cliffs are considered as environmentally sensitive; this includes steep slope areas, the historic/geologic importance of the cliffs and wetland areas at the base of the cliffs. In the cliff area, the slopes vary in grade with some areas in excess of

30%; due to the sensitive nature of this resource, the difficulties in engineering and State policies (N.J.A.C. 7:7E-3.32) limited active development possibilities are available.

The Palisades are one of New Jersey's most valuable resources and deserve the utmost care and protection. The Hudson River Waterfront Planning, Study and Development Commission noted that "the crest of the Palisades cliff affords the greatest view of the river and the New York skyline, one of the most spectacular views in America."

The Palisades Sill, the result of volcanic activity during the Triassic period, was formed by the intrusion of magma (subsurface lava) parallel to the bedding planes of the existing sedimentary rocks. Toward the outside margins of the intrusion, the diabase cooled relative quickly and only small crystals were permitted to form, creating a fine-grained fabric. The interior of the sill took much longer to cool and larger crystals were allowed for form, creating a coarser-grained fabric. In either case, the diabase has a dense, interlocking crystal fabric, which accounts for the toughness of the rock.

Regional uplift tilted the entire Triassic sequence to the west-northwest by several degrees. Over time, erosion of the softer shales and sandstone exposed the edge of the Palisades diabase sill until it stood, as now, as a cliff face in certain areas between Weehawken, New Jersey and Rockland County, New York bordering the western side of the Hudson River. Columnar jointing developed in these fountains during cooling and caused columnar and step-like appearances in certain places. Rock fragments from erosion

along these joints form distinctive talus slopes.

Legislation passed in 1900 by both New York and New Jersey laid the groundwork for the bi-State Palisades Park Commission, which supervises the Palisades Interstste Park system. The Palisades cliffs, from Fort Lee, north to Sparkill in New York, have been designated as a National Natural Landmark in recognition of their geological significance. However, south of Fort Lee, the cliffs have not received such Federal or State designation and therefore, protection has been left to the municipalities in which the cliffs are located. West New York has been one of the most farsighted communities by purchasing the 11.4 acre Palisades site to provide public protection for the cliffs.

Socially Valuable Locations

The Recovery Action Program, prepared under the U.S. Department of the Interior's Urban Park and Recreation Recovery Program, noted that although there were almost 42 acres of parks, playfields and playgrounds, the Town of West New York has a deficiency of almost 100 acres of outdoor recreational space (as determined by the National Recreation and Park Association standards). In a municipality considered one of the most densely developed in the Country, the provision of recreational facilities becomes one of the most critical aspects of public service.

The presence of existing parks along Boulevard East and the ability to utilize the Palisades site affords West New York the opportunity to benefit residents. The parks in the Study Area are used by all residents of

the Town but serve as a prime source of outdoor recreation for those living in the adjacent public housing project. In addition, the Town's Recreation Department runs a "day camp" program at Donnelly Park during July and August for children from 5-12 years of age. The swimming pool is available for use by both residents and non-residents and is also used for swimming meets and other similar activities.

Physically Constraining Locations

As noted in a previous section, the environmentally sensitive nature of the Palisades provides physical constraints as well within the Study Area, access for vehicles is not feasible or desirable and pedestrian access is also limited. The development of existing parks, to some extent, limits the use of the site and mandates the integration of new facilities with the present conditions. There are several potential areas for paths through the cliffs and they will be discussed in the Proposed Use Element of this Plan.

1. Donnelly Park

2. Donnelly Park, facing south

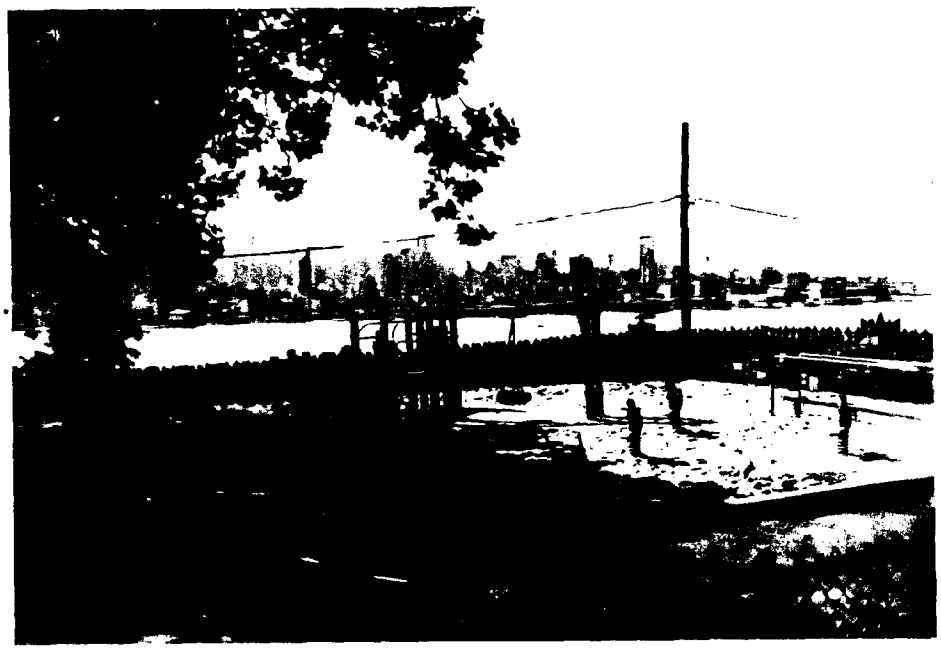

3. Donnelly Park tot lot

4. Pavillion

5. Pavillion lower terrace

6. Pavillion terrace

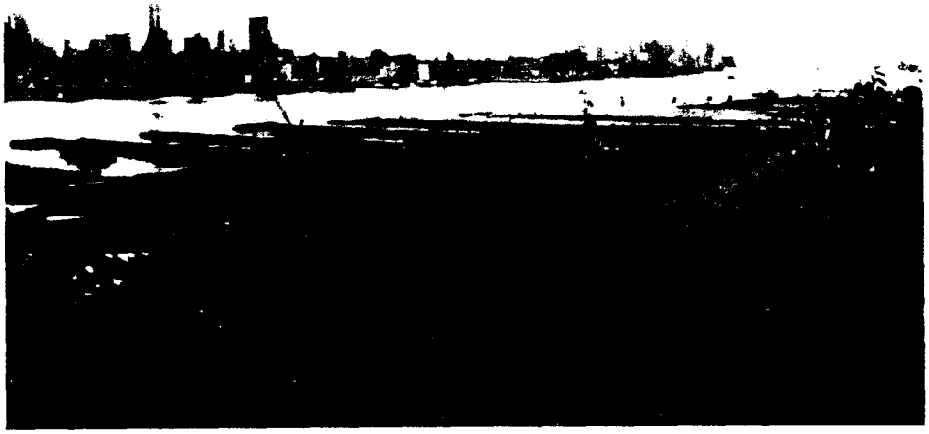

7. View of N.Y.C. skyline from Donnelly Park

8. Veteren's Park

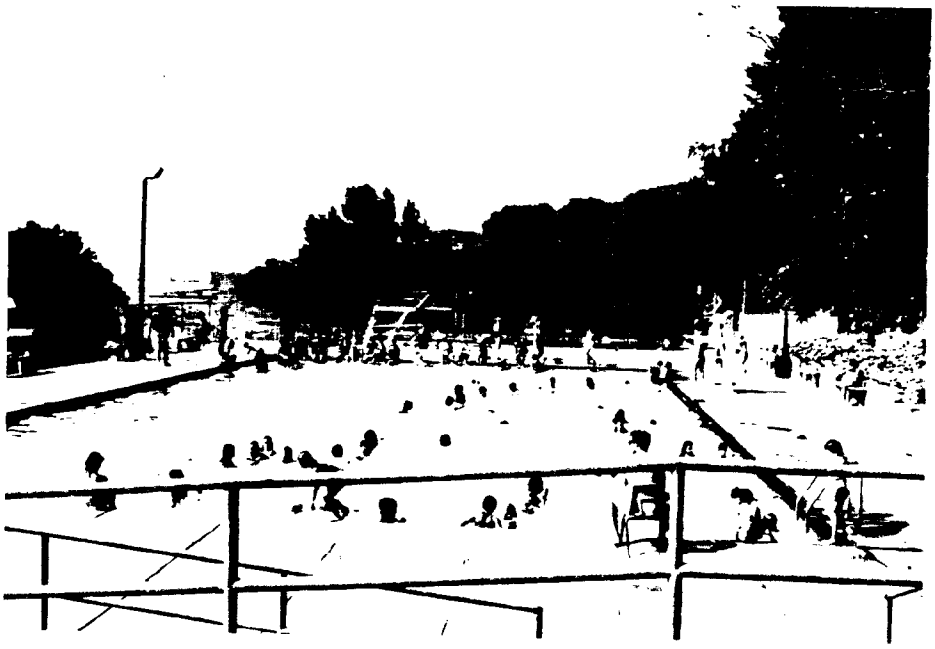

9. Panorama Swim Club

10. Palisades, facing Swim Club site

11. Palisades, facing south

12. Palisades, facing Veteren's Park

PROPOSED USE ELEMENT

As noted in the element on existing land use, the Study Area is comprised of three park facilities, containing both developed and undeveloped areas; different strategies must be prepared for each park. The following are proposed improvements to Donnelly and Veteran's Parks and the Palisades site that will accomplish the goals set forth in the introduction to the Plan.

Veteran's Park - 51st to 54th Streets on Boulevard East

This park is currently an underutilized, passive area consisting of a monument, benches and landscaping. The park requires rehabilitation and re-design to attract residents of West New York.

Goals:

1. encourage use of the park
2. improve access to and from park
3. improve views of New York City skyline

Proposed Improvements:

1. clear excessive vegetation growth at top of cliffs to expose views of the Hudson River and the New York City skyline
2. repair sidewalks, benches and lighting to improve the appearance of the park and make it more attractive to potential users. This "street furniture" should be uniform in appearance to provide an identity and link to other park facilities.

3. trim branches of existing trees. The mature, beautiful trees which line the pathways in Veteran's Park are one of its more important features, however they are overgrown and give a dark, forbidding appearance to the park. Pruning of branches will open up this area, give more natural light and improve views.

4. repair memorial monument in center of park. This area should be cleaned up to make it a focal point for users of the facility.

5. improve park identity. The modern sculpture located next to the Am-Vets building should be refurbished and relocated to a more visible area. Veteran's Park could become a "sculpture garden" with the addition of pieces from local artists and collectors.

6. Boulevard East sidewalks should be repaired and brick treatments used to link Veteran's Park to Donnelly Park and, ultimately, further north on Boulevard East to Liberty/Skyline and Verrazano Parks.

Donnelly Park - 54th to 60th Streets on Boulevard East

Donnelly Park is a mixed use area consisting of paths and benches, basketball courts, a tot lot and a pavillion. The park requires a general rehabilitation to allow a more active participation by residents.

Goals:

1. encourage use of underutilized portions of the park

2. improve access to the swimming pool site

3. improve views of the New York City skyline

Proposed Improvements:

1. clear excessive vegetative growth at top of cliffs to expose views of the Hudson River and the New York City skyline

2. repair sidewalks, benches and lighting to improve the appearance of the park and make it more attractive to potential users. This "street furniture" should be uniform in appearance to provide an identity and link to other park facilities.

3. The major component of this rehabilitation program for Donnelly Park is the enhancement and reuse of the pavillion. This facility consists of a street level paved area covered by a recently repaired roof and a lower level grass area surrounded by a stone wall; the base of the pavillion contains underutilized storage areas. The upper level should be repaved and benches repaired to take advantage of the unobstructed views from this area. The lower terrace level should be landscaped and reseeded and the stone wall should be repaired using similar materials. The storage area should be cleaned and repaired as necessary to provide storage and concession areas.

   The key to the reuse of this area is provision of new activities which focus on the unique aspects of the facility. The terrace should be used for concerts and other special events such as viewing fire works or boating in the Hudson River. The base of the pavillion should be used for storage of stage equipment, a small concession area and, if space exists, a museum display area for exhibits on West New York, the Hudson River or the Hudson County region.

4. Stone steps are located on either side of the terrace, however they are overgrown with vegetation and cannot be located after several feet. The area should be cleared to expose the remaining portion of the staircase which should be repaired and expanded to provide access to the Palisades site and the waterfront

5. Boulevard East sidewalks should be repaired and brick treatments used to link Donnelly Park and Veteran's Park with the swimming pool on Hillside Road and further north on Boulevard East to Liberty/Skyline and Verrazano Parks.

Palisades Site - east of Donnelly and Veteran's Parks

The Town's Panorama Swim Club is located on the northern portion of the site, however, most of the 11.4 acres are in their natural state and undeveloped.

Goals:

1. utilize the undeveloped portions of the site

2. improve access to other, existing parks on Boulevard East

3. provide access to waterfront recreation facilities

Proposed Improvements:

1. the undeveloped areas should be left in their natural state as much as possible to preserve and enhance existing features. Footpaths and resting points should be created to allow close, controlled contact with the Palisades environment.

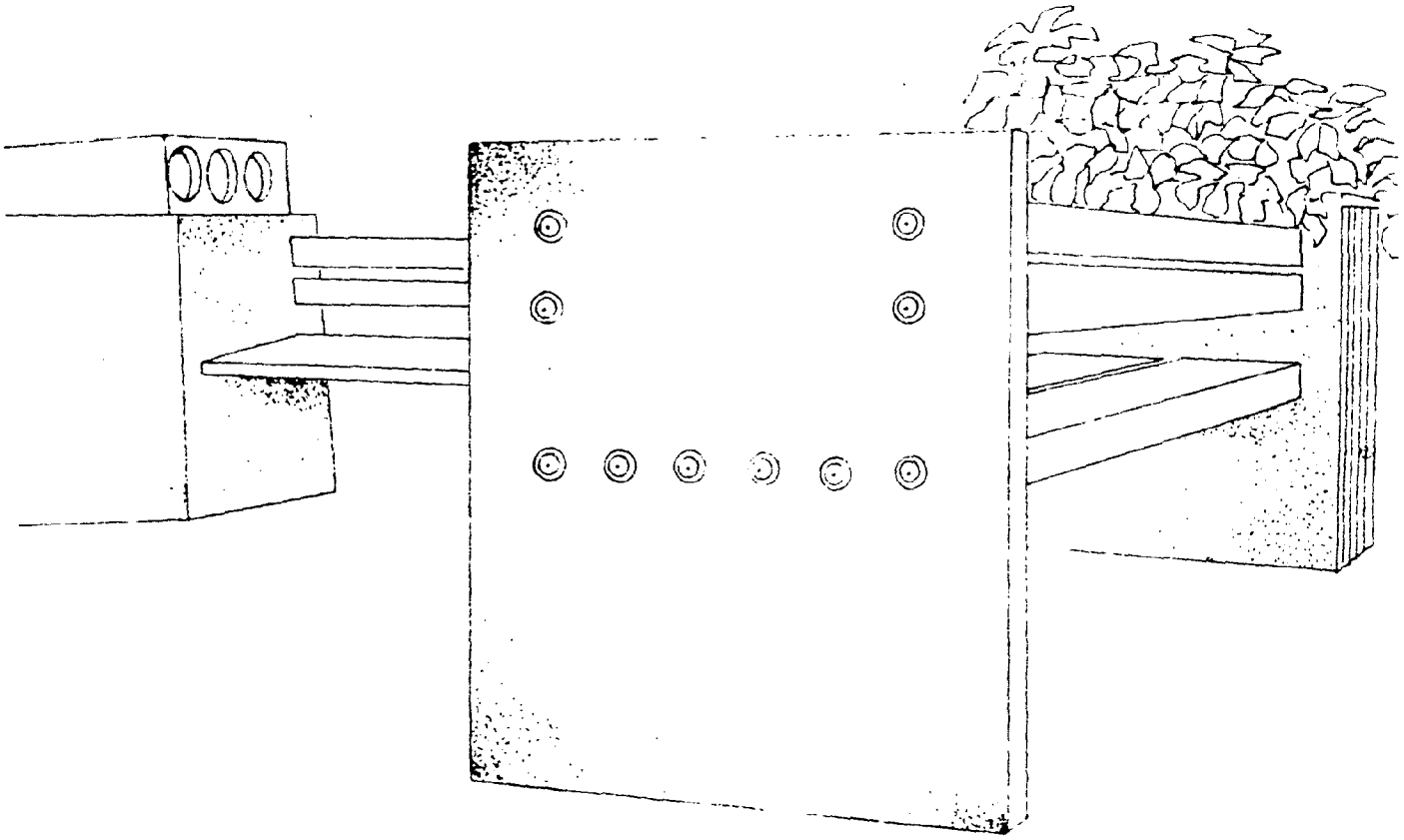

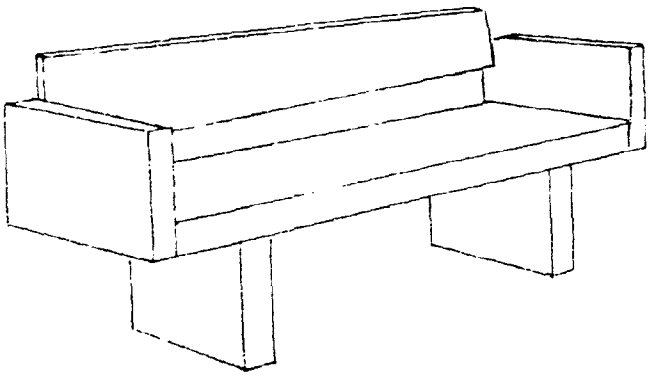

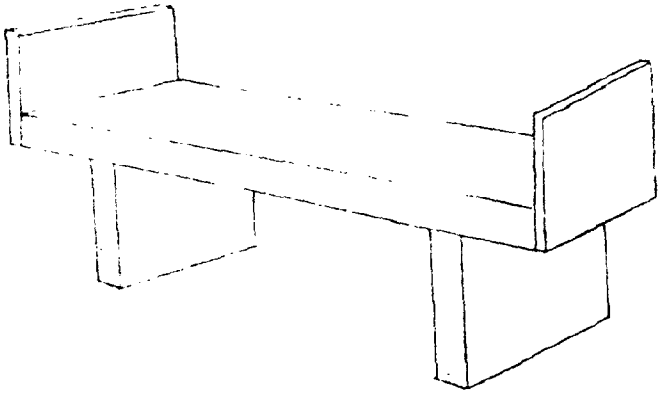

BENCHES

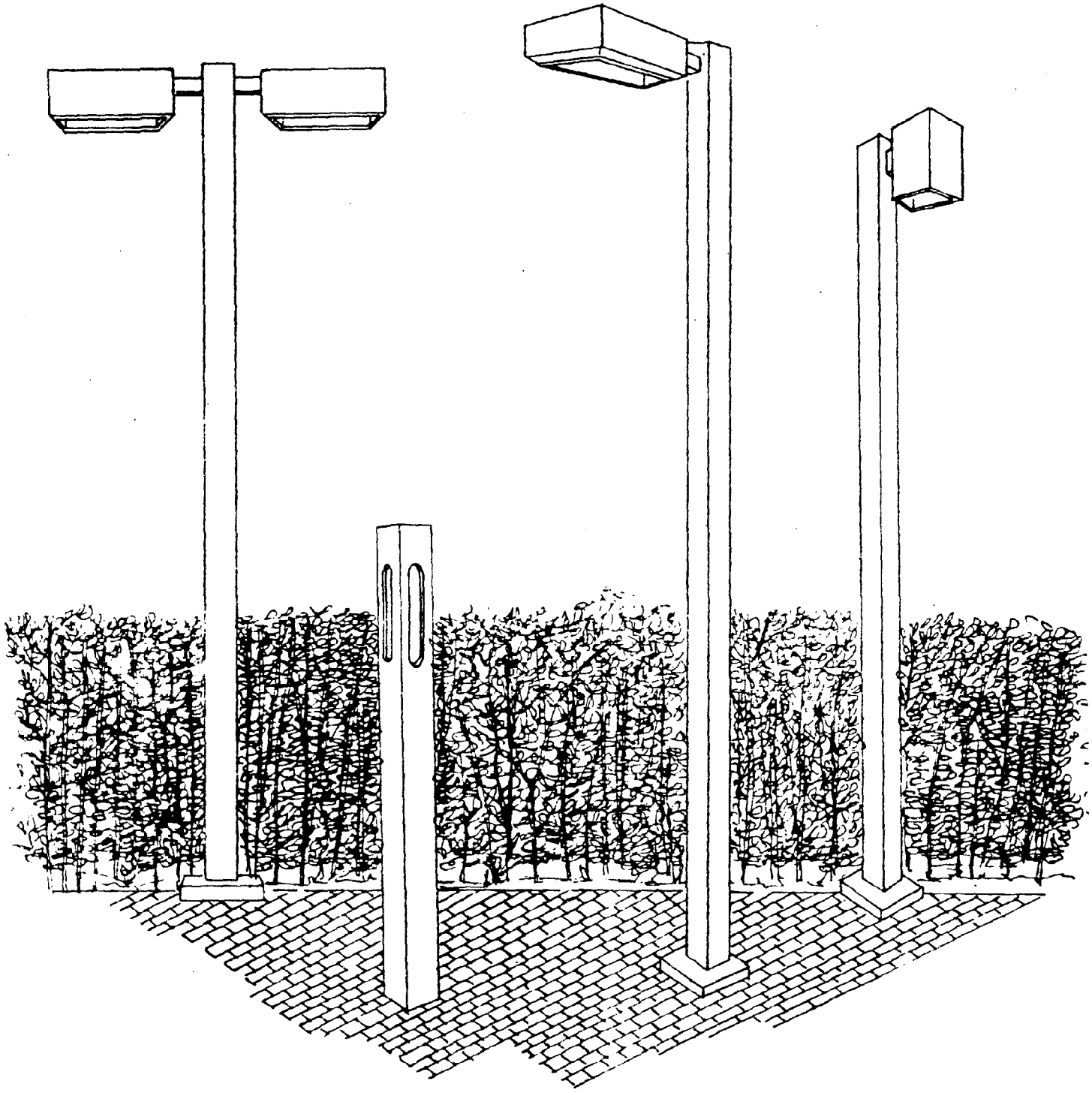

LIGHTING POLES

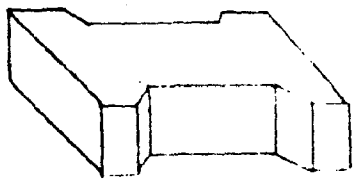

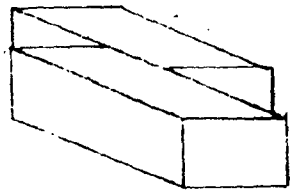

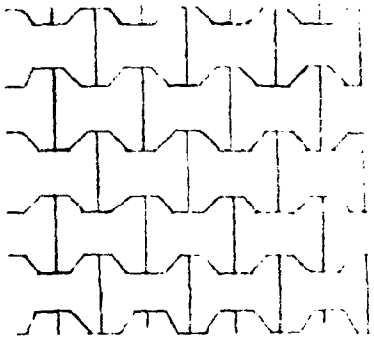

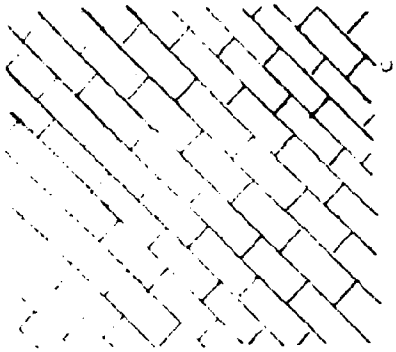

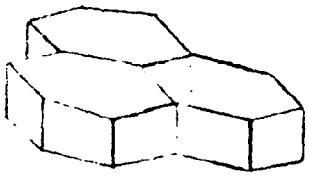

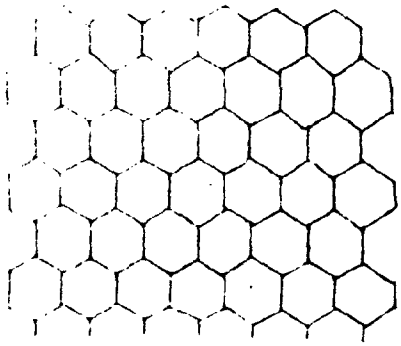

PAVING

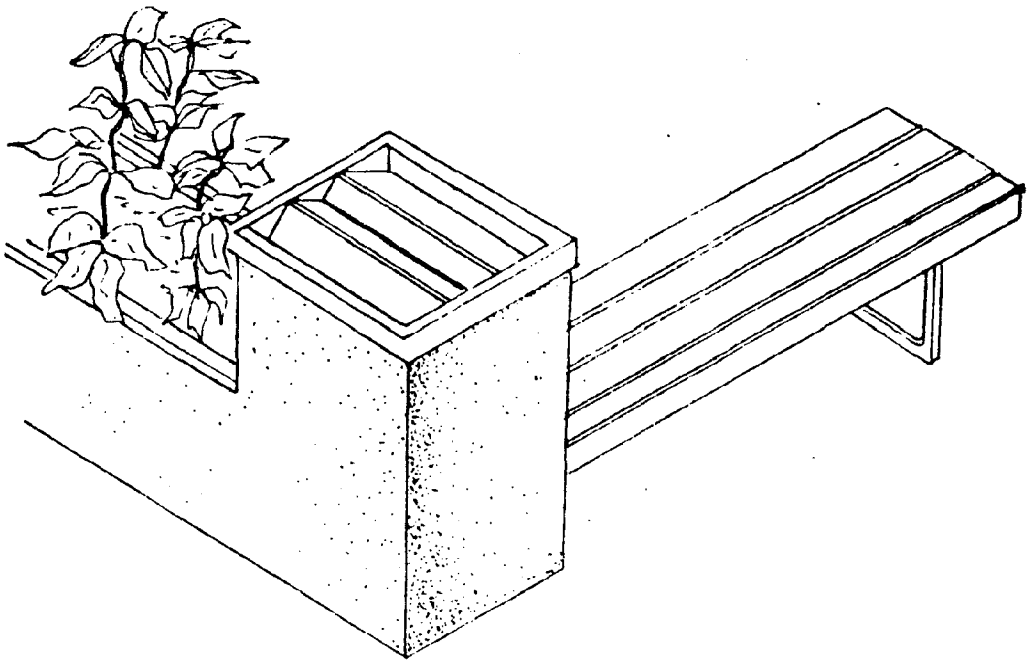

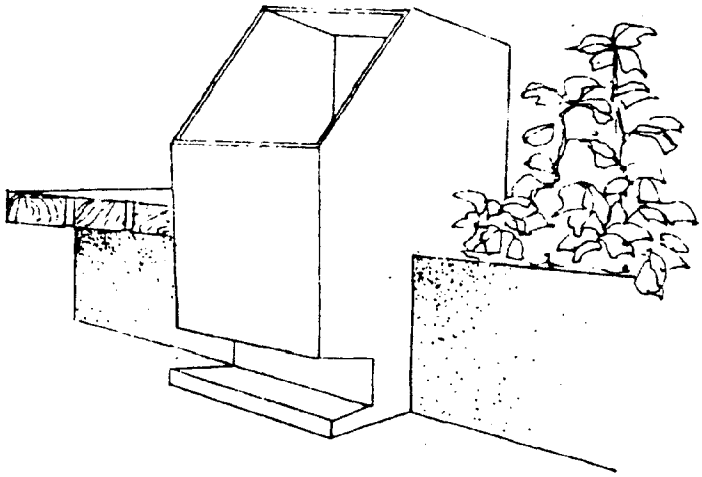

TRASH RECEPTACLES

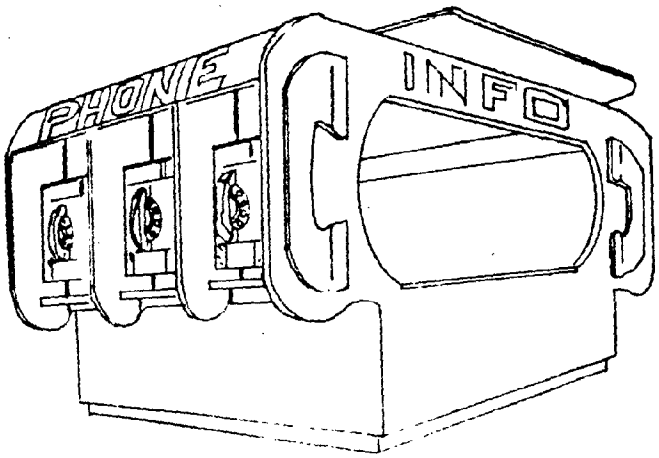

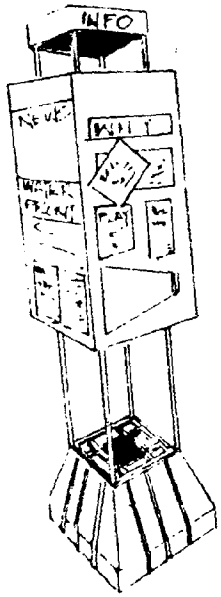

KIOSKS

IMPLEMENTATION ELEMENT

As described in the Proposed Use Element of the Palisades Park Plan, significant rehabilitation and development efforts are required to implement the Plan. This section discusses the various costs involved, management/maintenance issues and funding sources available to attain the Plan's goals.

Construction/Rehabilitation Costs

The primary costs associated with the Plan involve constuction/rehabilitation and maintenance. The three parks which comprise the Study Area are currently owned by the Town, therefore there are no acquisition costs or associated legal fees; any need for legal services which may arise during the implementation of the Plan will be provided by the Town's Law Department.

The Town's consulting engineers have made preliminary studies of the various plan elements and estimated the following construction and/or rehabilitation costs:

Veteran's Park	$ 650,000
Donnelly Park	$1,400,000
Palisades Site	$3,000,000

These costs are more fully described on the accompanying cost estimates prepared by the Town's consulting engineer.

Management/Maintenance Issues

A major problem facing West New York, and many other communities is vandal-

WEST NEW YORK PARKS REHABILITATION
BOULEVARD EAST
TOWN OF WEST NEW YORK, NEW JERSEY

SECTION A - 51st to 56th STREETS.
EAST ALONG BOULEVARD EAST

PRELIMINARY UNIT COST BREAKDOWN

EXISTING AND NEW WALKS		
New paving including demolition and carting 22,000 s.f. @ $10.00 s.f. =		$ 220,000.
REFURBISH STONE WALLS		
Stonewall repairs 500 l.f. @ $20.00 l.f. =	$10,000.	
Demolish and rebuild 4' retaining walls 2,130 s.f. @ $11.50 s.f. =	$24,500.	$ 34,500.
FENCING		
700 l.f. @ $10.00 l.f.		$ 7,000.
MONUMENT REPAIR		
base, monument, paint, lighting		$ 50,000.
LANDSCAPING		
Clearing and grubbing including specialty clearing	$10,000.	
Trees 60 @ $300 =	$18,000.	
Shrubs 350 @ $ 50. =	$17,500.	
Seeding 53,000 s.f. @ $1.50 s.f.	$80,000.	$ 125,500.
LIGHTING		
33 high intensity floods @ $4,000 =		$132,000.

SECTION A CONT'D.

Sheet 2

PARK FURNISHINGS

Game tables 6 @ $1,000. ea.	=	$ 6,000.	
Benches 75 @ $ 750. ea.	=	57,000.	
Waste Receptables 20 @ $600 ea.	=	12,000.	
Water Fountains 4@ $1,400 ea.	=	5,600.	
			$ 81,000.

PRELIMINARY CONSTRUCTION COST $ 650,000.

WEST NEW YORK PARKS REHABILITATION
BOULEVARD EAST
TOWN OF WEST NEW YORK, NEW JERSEY

SECTION B - 56th to 60th STREETS
EAST ALONG BOULEVARD EAST

PRELIMINARY UNIT COST BREAKDOWN

EXISTING AND NEW WALKS			
New Paving including demolition and carting 46,000 s.f. @ $10.00 s.f. =		$ 460,000.	
New stairs and platform		$ 20,000.	
			$ 480,000.
REFURBISH STONE WALLS			
2,500 l.f. @ $20.00 l.f. =			$ 50,000.
FENCING			
3,000 l.f. @ $10.00 l.f. =			$ 30,000.
PAVILLION RENOVATION			
2,400 s.f. ea. floor @ $35.00 s.f. 2 floors total			$ 168,000.
LANDSCAPING			
Clearing and grubbing including specialty clearing	=	$ 8,000.	
Trees 50 @ $300. ea.	=	$ 15,000.	
Shrubs 700 @ $50. ea.	=	$ 35,000.	
Seeding 85,000 s.f. @ $1.50 s.f.	=	$ 128,000.	
			$ 186,000.
LIGHTING			
70 site lighting fixtures @ $2,000. ea. =			$ 140,000.
RENOVATE PLAYGROUND			
Equipment		$ 10,000.	
Resurface 24,000 s.f. @ $10.00 s.f.		$ 240,000.	
			$ 250,000.

SECTION B CONT'D.

PARK FURNISHING

Benches 100 @ $750. ea	=	$ 75,000.	
Waste Receptacles 26 @ $600.	=	$ 15,400.	
Water Fountains 4 @ $1,400. ea.	=	$ 5,600.	
			$ 96,000.

PRELIMINARY CONSTRUCTION COST $ 1,400,000.

WEST NEW YORK PARKS REHABILITATION
BOULEVARD EAST
TOWN OF WEST NEW YORK, NEW JERSEY

SECTION C - DOWN THE PALISADES FROM 51st STREET TO RIVER ROAD

PRELIMINARY UNIT COST BREAKDOWN

EXISTING AND NEW WALKS			
Create new walls 15,000 s.f. @ $10.00 s.f.	=		$150,000.
FENCING			
20,000 l.f. @ $10.00	=		$200,000.
LANDSCAPING			
Clearing and grubbing including specialty clearing 25 A @ $2,000 ea.	=	$ 50,000.	
Seeding 1,066,000 s.f. @ $1.50 s.f.		$ 1,600,000.	
			$1,650,000.
LIGHTING			
15 high intensity floods @ $4,000 =		$ 60,000	
45 site lighting fixtures @ $2,000 ea.	=	$ 90,000	
			$ 150,000.
NEW STONE WALLS			
8,700 s.f. @ $11.50 s.f.			$100,000.
PARK FURNISHINGS			
benches, receptacles, water fountains, exercise equipment, decking, shelters, pavillion, flag poles etc.	=		$ 750,000
PRELIMINARY CONSTRUCTION COST	=		$3,000,000

ism to parks and recreation facilities; much time, money and effort is put into a rehabilitation program by the Town only to have to expend greater sums to repair damaged equipment and landscaping. As part of the Palisades Park Plan a public education program will be instituted to attempt to alleviate this problem. The following is a description of the staffing and equipment levels and budget process of the Town's Parks Department and a proposed public education program.

The process for developing procedures and policies for parks and recreation is a coordinated effort of the Mayor's Office, the Commissioner of Parks and Public Property and his staff, with input from the Superintendent of Parks and the Department of Purchasing. The Community Development Department has also been involved in the planning for parks and recreation through the implementation of recreation improvements funded by HUD's Community Development Block Grant Program and the State of New Jersey's Green Acres Program for parkland acquisition and improvement. In addition, the Town of West New York has a contractual arrangement with a planning consultant who provides services to the Town and the Community Development Department.

Management and maintenance of the Town's parks is provided by the Division of Parks of the Department of Parks and Public Property. The Division of Parks consists of the Director of Parks and Public Property, 44 permanent and 17 temporary employees, in addition to the Park Police staff consisting of a Chief and 11 patrolmen. The Safe & Clean Neighborhoods Program, funded on a 50%/50% split by the Community Development Department and the State Department of Community Affairs, provides 4 "Clean Inspectors" and

21 "Safe Patrolmen" whose jurisdiction includes the parks.

The recreation program for the Town is run by the Department of Public Affairs and Recreation with a staff of 10 full or part-time employees and up to 150 temporary seasonal workers. Town-sponsored Senior Citizen's recreational activities are directed by the Supervisor-Coordinator of Senior Citizens Activities with a staff of 3 full and part-time employees and one temporary worker.

Vehicular equipment for the Division of Parks consists of two vans, used for transporting electrical and carpentry equipment, two jeeps that are shared by the Division of Buildings,one open-bed truck and one pick-up truck. In addition, the Department also has several lawnmowers and other field maintenance equipment. Expenditures for equipment maintenence and replacement are included in the annual budget for the Department of Parks and Public Property and equipment is replaced as needed.

Security for the parks is provided by the eleven member Park Police who are stationed in the Recreation Center in Memorial Park. While the Park Police have a relatively small area to patrol, it is impossible to be in all places at all times. Destruction of park equipment takes place during the day and also during off-hours when the parks are not in use.

There are several ways the Town can reduce the deterioration of parks in West New York. Ideally, several additional park police would be hired and, provided with scooters or other vehicles, would patrol the parks during the night when most of the vandalism takes place. The Town could use unemployed youths to supplement park employees in painting, seeding, lawn-

mowing and other maintenance work. This would allow more repair work to be accomplished and free Town employees to do larger-scale maintenance work such as repairs to equipment and fences. In addition, this would provide an expanded future work force that could be used when the large, Waterfront area is developed and additional parkland will be provided by the developer. Funds to hire these unemployed youth could be provided through the Community Development Block Grant Program.

The only way to effectively prevent vandalism is the education of park users. This educational process should begin in the homes and schools and be promoted Town-wide, through the Safe & Clean Neighborhoods Program, in the press, radio and other media.

Elements of a public education program to be considered should include:

1. The designation of a specific week to "kick off" the program; this should be the beginning of the spring season when the parks begin to get their heaviest use. The "kick-off" week should be preceded by several weeks of intense publicity in the newspapers, radio and schools.

2. One activity of this "Protect the Parks" week could be a poster contest cosponsored by the Board of Education and the Division of Parks. This contest would have an anti-vandalism theme and the contest winners, chosen, perhaps by members of the Culteral Arts Council, would be used in the publicity campaign.

3. In conjunction with the "Safe & Clean Neighborhoods Program", special "clean-up" days should be held throughout the summer and fall. These "clean up" days would involve the children who use the parks and educate them as to the importance of keeping the parks clean and damage-free. The children who clean up their park the best that day should be given some sort of prize, such as free ice cream or soda.

4. The Park Police consists of the Chief and eleven patrolmen. During the week there is single coverage in the parks from 8:AM to 4:PM and full coverage from 4:PM to 12:AM; on weekends, only one part-time patrolman is on duty. The regular Town Police cover the parks from 12:AM to 8:AM. As scheduled there is no specific police coverage of the parks during the night and very light coverage on weekends. Adequate police coverage of the parks is one way to reduce vandalism and the high cost of repair, replacement and rehabilitation of park facilities. In this regard, the Park Police should be rescheduled so that there is better coverage on weekends when the parks are heavily used and the regular Town police should make regular "sweeps" through the parks during late night hours. The Town should hire 3 additional Park Police and supply them with vehicles so that they can cover several parks over a scheduled period of time.

5. A special "hot line" number should be set up so that residents can call the Park Police and report acts of vandalism.

6. The "Protect the Parks" education campaign should become an annual event held the same time each year. This then becomes an anticipated event which reinforces the aims of the program.

The budget for the Department of Parks and Public Property is prepared each October by the Commissioner of Parks and Public Property and his staff with input from the Parks Superintendent and the Department of Purchasing. The Department uses a zero-based method of budgeting, which is newly developed each year and is not based on the past year's experience. Each component of the budget is evaluated on its own merits and not on the previous year's performance.

The Department of Parks and Public Property's budget for the last three years is as follows:

Year	Salaries & Wages	Other Expenses	Total
1985	$745,805	$486,400	$1,232,205
1986	$745,805	$581,100	$1,326,905
1987	$879,500	$601,300	$1,480,800

Funding Sources

Although the Town owns the property located in the Study Area, and does not have to undertake any expensive acquisition procedures, the costs involved in the rehabilitation program are substantial. In order to implement the Plan, which could not be accomplished by a single funding source, the following sources will be utilized:

1. Community Development Block Grant - The Town participates through the Urban County process and will allocate funds towards development activities. In the past, the Town has used funds for the Swimming Pool site,

Memorial Park, Washington Park and others.

2. Green Trust Program - The Town will apply to the Green Trust Program for development funds. West New York has an excellent "track record" with funds for the swimming pool and St. Mary's Park. In addition, the Town has an approved application for funds to acquire land in the Waterfront.

3. Zoning and Developers - The Town's exemplary Zoning Ordinance requires the provision of waterfront parkland and the development of a Hudson River Walkway with access to the river for residents of the Town. In addition, future "developer's agreements" will include provisions for participation in park development.

4. Other Sources - As they become available, other funding sources will be sought and applications made for funding.

STATE REGULATION CONSISTENCY ELEMENT

The State's Rules on Coastal Resources and Development (N.J.A.C.7:7E - 1.1 et. seq.) provide substantive coastal policies which guide public decisions about significant proposed development and management of resources for New Jersey's Coastal Zone. The following section discusses the various applicable rules and the Palisades Park Plan's compliance with those regulations.

Special Areas

Special Areas are those 45 types of coastal areas which were found to merit focused attention and special management policies. The following such areas are found within the Study Area:

1. Steep Slopes (7:7E - 3.32). Steep slopes are land areas with slopes greater than 15 percent, which are not adjacent to the shoreline and therefore not coastal bluffs (N.J.A.C. 7:7E - 3.30). Steep slopes include natural swales and ravines, as well as man-made areas, such as those created through mining for sand, gravel or fill, or road grading. Slopes of less than 15% are not considered to be steep slopes. The Rules indicated that development on steep slopes is discouraged unless their use is essential to a reasonable use of the site. If some development of steep slopes meets that standard, then the development must:

    a. Produce minimum feasible site disturbance,

    b. Provide for maximum feasible vegetation of the steep slope, es-

pecially with native woody vegetation,

c. Be consistent with the natural contour of the site to the maximum extent feasible,

d. Include limited stabilization measures if necessary, such as terracing and paving, that are consistent with the natural or predevelopment character of the entire site, to the maximum extent practicable, and

e. Meet the Resource Policies for Runoff (N.J.A.C. 7:7E - 8.9) and applicable standards adopted by local Soil Conservation Districts of municipalities pursuant to the Soil and Sediment Control Act (N.J.S.A. 4:24 - 39 et. seq.).

The Plan is consistent with this policy as no "development" will take place. In order to minimize disturbance, existing stairs and/or trails will be used to provide access, natural features will be used for sitting/viewing areas and, with the exception of some clearing to utilize paths and expand view possibilities, there will be a minimal disturbance of vegetation.

2. Public Open Space (7:7E - 3.38). Public Open Space constitutes land areas owned and maintained by state, federal, county and municipal agencies or non-profit private groups (such as conservation organizations and homeowner's associations) and dedicated to conservation of natural resources, public recreation, or wildlife protection or management. Public Open Space also includes State forests, State Parks

and State Fish and Wildlife Management Areas and designated Natural Areas (N.J.S.A.13:1B - 15.12a et. seq.) within DEP-owned and managed lands. The State's policy is that:

a. New or expanded public or private open space development is encouraged at locations compatible or supportive of adjacent and surrounding land uses.

b. Development that adversely affects existing public open space is discouraged.

c. Development within existing public open space, such as campgrounds and roads, is conditionally acceptable, provided that the development complies with the Coastal Resource and Development Policies and is consistent with the character and purpose of the public open space, as described by the park master plan when such a plan exists.

d. Provision of barrier free access to public open space is encouraged.

The Plan is consistent with this policy by the provision of an expanded public open space facility, the preservation of a unique area and is responsive to the needs of residents of West New York, the Region and the State. A prime component of the Plan will be the provision of open space that is both visually and physically contiguous and affords users continued movement through such public open space.

3. Special Hazard Areas. (7:7E - 3.39). Special Hazard Areas include areas with a known actual or potential hazard to public health, safety and welfare, or to public or private property, such as the navigable air space around airports and seaplane landing areas, potential evacuation zones around major industrial and energy facilities and areas where hazardous materials are used or disposed, including adjacent areas. Coastal development, especially residential and labor-intensive economic development, within special hazard areas is discouraged. All development within special hazard areas must include appropriate mitigating measures to protect the public health and safety.

   There are no known hazard areas within the Study Area. The NJ DEP Waterfront Development Permit Application & Environmental Impact Statement for the Port Imperial project on the adjacent ARCORP Properties site indicated that the area was not used for the production or handling of chemicals and the landfill materials were obtained from railroad operations and miscellaneous sources such as non-hazardous dredge spoils approved by NJ DEP and the Army Corp of Engineers.

4. Special Urban Areas (7:7E - 3.41). Special Urban Areas are those municipalities defined in urban aid legislation (N.J.S.A. 52:27D - 178) as qualified to receive State aid to enable them to maintain and upgrade municipal services and offset local property taxes; West New York has been so designated. The State's policies are as follows:

   a. Development that will help to restore the economic and social viability of special urban areas is encouraged. Development that

would adversely affect the economic well being of these areas is discouraged, when an alternative more beneficial to the Special Urban Area is feasible. Development that would be of economic and social benefit and that serves the needs of local residents and neighborhoods is encouraged.

b. Housing, hotels, motels and mixed use development which is consistent with the Public Access Resource Policy (7:7E - 8.11), including those provisions relating to fishing access as appropriate, are acceptable only over Large Rivers where water dependent uses are demonstrated to be infeasible. These uses are conditionally acceptable on structurally sound existing pilings, or where at least one of the following criteria is met:

(1) Where piers have been removed as part of the Harbor Clean Up Program, the equivalent pier area may be replaced in the same or another location.

(2) Structurally sound existing pilings may be reconfigured provided that the total area of water coverage is not increased and that fisheries resources are not adversely impacted.

(3) Expansion of the existing total area water coverage is discouraged, except where it can be shown that extensions are functionally necessary for water dependent uses. For example, additional piers and pilings would be conditionally acceptable for a marina which is a water dependent use.

c. Housing, hotels, motels and mixed use development are acceptable in Filled Water's Edge Areas, provided that development is consistent with the Filled Water's Edge Policy (N.J.A.C. 7:7E - 3.16) and public access is provided for, as required by 7:7E - 8.11.

The Plan is consistent with this policy by the enhancement of a public recreational facility that serves the needs of local residents and neighborhoods and provides public access to the waterfront. Funds to implement the Plan will come from the Federal CDBG program, State Green Acres program and private sources.

5. Geodetic Control Reference Marks (7:7E - 3.45). Geodetic Control Reference Marks are traverse stations and benchmarks established or used by the New Jersey Geodetic Control Survey pursuant to P.L. 1934, C116. They include the following types:

a. Monument-(Mon), Disk-(Dk): A standard United States Coast and Geodetic Survey or New Jersey Geodetic Control Survey disk set in a concrete post, pavement, curb, ledge rock, etc., stamped with a reference number and used for both horizontal and vertical control.

b. Point-(Pt.): A State Highway, Tidelands (Riparian), City, Etc. survey marker represented by a chiseled cross, punch hole, brass plug, etc. used for horizontal and vertical control. These stations are not marked, but if there shluld be an enclosing box, the rim is stamped with a number.

c. Rivet-(Rv.): A standard metal rivet set by the New Jersey Geodetic Control Survey, used for vertical control.

d. Mark-(Mk.): Same as Point, but used only for vertical control. In the description of such marks there should appear a mark number followed by an equality sign and then the original name or elevation of the bench mark and in parentheses the name of the organization which established the mark.

The State's policy is that the disturbance of a Geodetic Control Reference Mark is discouraged. When a Geodetic Control Reference Mark must be moved, raised or lowered to accommodate construction, the New Jersey Geodetic Control Survey shall be contacted at least sixty days prior to disturbance, and arrangements shall be made to protect the position. If the position can not be protected, it may be altered in position after approval by the New Jersey Geodetic Control Survey and under the supervision of a licensed professional engineer or land surveyor using standard methods. Copies of field notes and instruments, tape and rod specifications including calibration data, shall be submitted to the New Jersey Geodetic Control Survey.

Any Geodetic Control Reference Mark uncovered during site work will be protected to the maximum extent possible. It is not anticipated that any proposed work would cause a disturbance to any such mark.

6. Basic Location Policy (7:7E - 6.2). A location may be acceptable for development under the specific location policies, but the DEP may

reject or conditionally approve the proposed development of the location as reasonably necessary to:

a. Promote the public health, safety and welfare,

b. Protect public and private property, wildlife and marine fisheries, and

c. Preserve, protect and enhance the natural environment.

The Plan is consistent with this policy and promotes the public welfare, protects public and private property and preserves, protects and enhances the natural environment by the expansion of a regionally valuable recreational site.

7. Recreational Use Policy (7:7E - 7.3). Resort-recreation uses include the wide range of small and large developments attracted to and often dependent upon locations along the coast. Thses uses include hotels, motels, marinas, boating facilities, campgrounds, amusement piers, parks and recreational structures such as bath houses, natural areas, open space for active and passive recreation and linear paths for bicycling and jogging. (See also 7:7E - 7.10 hotels and motels; and 7:7E - 5.5(d). campgrounds).

a. Each waterfront municipality should contain at least one waterfront park on each body of water within the municipality. Municipalities that do not currently provide, or have active plans to provide, public access to the water will not be eligible for Green Acres or Shore Protection Bond Funding.

b. Resort/recreation uses and commercial fisheries uses shall have priority over all other uses in Monmouth, Ocean, Atlantic and Cape May counties with highest priority reserved for those uses that serve a greater rather than a lesser number of people and those uses that provide facilities for people of all ages and for people with physical handicaps.

c. Appropriate recreation areas shall be incorporated in the design of all residential, industrial and commercial development to the maximum extent practicable, as necessary to ensure that needed on-site recreation opportunities will not be precluded by a lack of suitable open space. The "maximum extent practicable" will be determined based on guidelines of the Green Acres Program (See N.J.S.A. 13:8A - 1 et. seq.) which consider the recreation resource supply and demand, the natural characteristics of the site and the ability to identify a public agency or other organization willing to manage, maintain and develop the open space as a recreational resource. What is necessary will be determined by consideretion of recreation resource supply and demand and municipal and county open space and recreation master plans.

The Plan proposes natural areas, open space for passive recreation and linear paths that will tie in to the proposed Hudson River walkway/bikeway. The Town of West New York has an approved Green Acres application to acquire a 6 acre site on the waterfront which will be developed as part of the overall ARCORP Properties project. A component of the Palisades Park Plan is the linkage of the parks on top of the

Palisades and the proposed waterfront recreation areas.

8. Transportation Use Policy (7:7E - 7.5). Policies are noted as:

   a. New and improved needed public transportation facilities, including bus, rail, air, boat travel, people mover systems and related parking facilities, are encouraged.

   b. Existing rail right-of-ways may not be converted to other uses, unless the Department determines that the route is not critical for public transportation or public access reasons.

   c. The construction of internal bicycle paths, foot paths and sidewalks in residential, commercial and industrial developments is required to the maximum extent practicable

   d. Linear bicycle and foot paths are encouraged along the edges of all water bodies and from the water body to the nearest public road, provided they would not disturb Special Areas or subject the user to danger.

   e. Existing bicycle and foot paths shall be continued around development when it is not practical to pass through development.

   The Palisades Park Plan is consistent with these policies as follows:

   a. Public transportation is provided by existing bus lines on Boulevard East that stop in several locations in the Study Area. The Study Area is also accessible to pedestrians from a large portion of the Town.

b. Links will be provided to any future bus/light rail transitway on the waterfront.

c. Internal paths will be located within and through the Study Area to link the various recreation facilities.

d. Links will be provided to the local segment of the proposed Hudson River walkway/bikeway to be built by ARCORP Properties in West New York,

9. Vegetation (7:7E - 8.8). The State policy mandates that coastal development shall preserve, to the maximum extent practicable, existing vegetation with a development site. Coastal development shall plant new vegetation, particularly appropriate native coastal species, to the maximum extent practicable.

With the exception of some clearing to locate and establish paths and sitting areas and to enhance views, no disturbance of natural vegetation is proposed. Any specimen trees found in the Study Area (including those planted in Donnelly and Veteran's Park) will be protected to the maximum extent possible.

10. Public Access to the Waterfront (7:7E - 8.11). The State's policy is defined as follows:

a. Coastal development adjacent to all coastal waters, including both natural and developed waterfront areas, shall provide perpendicular and linear access to the waterfront to the maximum extent practicable, including both visual and physical access. Development

that limits public access and the diversity of waterfront experiences is discouraged.

b. All development adjacent to water shall, to the maximum extent practicable, provide within its site boundary, a linear waterfront strip accessible to the public. If there is a linear waterfront accessway on either side of the site and it is not feasible to continue it within the boundaries of the site, a pathway around the site connecting to the adjacent parts, or potential parts of the waterfront path system is adjacent parcels shall be provided.

c. Municipalities that do not currently provide or have active plans to provide, access to the water will not be eligible for Green Acres or Shore Protection Bond funding.

d. Public access must be clearly marked, provided parking where appropriate be designed to encourage the public to take advantage of the waterfront setting and must be barrier free where practicable.

e. A fee for access to, including parking where appropriate or use of publicly owned waterfront facilities must be no greater than is required to operate and maintain the facility and shall not discriminate between residents and non-residents except that municipalities may set a fee schedule that charges up to twice as much to non-residents for use of marinas and boat launching facilities for which local funds provided 50 percent or more of the costs.

f. All establishments including marinas and beach clubs which control access to tidal waters shall comply with the Law Against Discrimination, N.J.S.A. 10:5 - 1 et. seq.

g. Public access including parking where appropriate shall be provided to publicly funded shore protection structures and to waterfronts created by public projects unless such access would create a safety hazard to the user. Physical barriers or local regulations which unreasonably interfere with access to, along or across a structure are prohibited.

h. Development along the Hudson River must conform with the Hudson River Walkway and Design Guidelines, a report prepared by Wallace, Roberts and Todd for NJ DEP, 1983 and which may be obtained from the Department's Division of Coastal Resources.

i. Development adjacent to coastal waters shall provide fishing access within the provision of public access wherever feasible and warranted.

j. Development adjacent to coastal waters shall provide barrier free access within the provision of public access wherever feasible and warranted by the characteristics of the access area.

The Plan is consistent as follows:

1. Paths will be located to provide perpendicular access to the waterfromt and linear access between facilities.

2. The Plan will include linkages to the proposed Hudson River walk-way/bikeway and between the various existing Town parks north of 60th Street along Boulevard East.

3. The Panorama Swim Club facility provides barrier free access. Wherever feasible, this will be expanded into the remainder of the Palisades site.

11. Scenic Resources and Design (7:7E - 8.12). New coastal development is encouraged to be visually compatible with its surroundings in terms of building and site design and to enhance scenic resources. New coastal development that is not visually compatible with existing scenic reaources in terms of large scale elements of building and site design is discouraged.

The proposed rehabilitation and expanded use of the Pavillion will be compatible with its current design and will include elements such as trees, shrubs, existing stone walls and paths. Any new landscaping will be compatible with existing plantings or naturally occurring trees and shrubs.

DATE DUE

GAYLORD No. 2333

NOAA COASTAL SERVICES CENTER LIBRARY

3 6668 14106 8108