Coastal Zone
Information
Center

Prepared For:

Government of Guam
Guam Energy Office
Agana Guam

ECONOMIC UTILIZATION OF COLD WATER EFFLUENT FROM A PROPOSED LAND-BASED OTEC PLANT

Prepared Under Contract:

C-0-3400014

CACI, Inc.-Federal

Marine Systems Engineering Department
1815 N. Fort Myer Drive
Arlington, Virginia 22209

Prepared By:

Jon Buck and
Dr. James Roney

October 1980

TK
1073
B83
1980

AUTHENTICATED
U.S. GOVERNMENT
INFORMATION
GPO

TABLE OF CONTENTS

Secondary Utilization of Cold Water from OTEC

	Summary	i
1	Introduction	1-1
1.1	Objective	1-1
1.2	Background	1-1
1.3	Range of Uses of OTEC Cold Water	1-2
1.3.1	Cold Water for Direct Cooling	1-3
1.3.2	Assisting Cooling Systems	1-3
1.3.3	Nutrient or Minerals Source	1-6
2	Technical Factors	2-1
2.1	OTEC Plant Characteristics	2-1
2.2	Physical and Commerical Characteristics of the OTEC Site	2-5
2.2.1	Port of Guam	2-5
2.2.2	Cabras Island Vicinity	2-6
2.2.3	Environmental Data	2-8
3	Applications of OTEC Cold Water Utilization	3-1
3.1	Direct Refrigeration or Cooling	3-1
3.1.1	Introduction	3-1
3.1.2	Cold Water Quantities Required	3-2
3.1.3	Physical Arrangements	3-2
3.1.4	Savings of Energy & Cost	3-4
3.2	Indirect Assistance to Cooling Systems	3-6
3.2.1	Precooling	3-6
3.2.2	Providing Heat Dissipation for Cooling Systems	3-6
3.3	Mariculture	3-11
3.3.1	Introduction	3-11
3.3.2	Algae	3-13
3.3.3	Shellfish	3-14
3.3.4	Finfish	3-14
3.3.5	Conclusion	3-15

4	Implementing the Utilization of of OTEC Cold Water	4-1
4.1	Short Term Utilization	4-1
4.2	Long Term Utilization	4-3
5	Economic Inputs of OTEC Cold Water Utilization	5-1
5.1	Construction Costs	5-1
5.2	Employment Resulting From OTEC Cold Water Utilization	5-3
5.3	Private Sector Income Derived	5-5
5.4	Effects on Port of Guam Development	5-6
	APPENDIX A	5-9
	APPENDIX B	5-11
	Bibliography	5-12

SUMMARY

This study of the secondary uses of cold water from an OTEC power plant was carried out for the Guam Energy Office to assist them and other agencies of the Government of Guam on planning for effective and economic use of this byproduct resource. If an OTEC power plant were installed on Cabras Island, there are several possible uses of the cold water discharged from the power plant after being drawn from the deep ocean and used in the OTEC power plant condensers. These uses can enhance the Port of Guam and local commercial activities.

Many possible uses were examined; the most promising are:

(1) Direct cooling, such as for cold storage of foods, including tuna or other fish,

(2) Assisting cooling systems, such as steam power plant condenser cooling, chemical or refinery plant heat dissipation, etc.,

(3) Mariculture, and other uses of the chemical nutrients and minerals in the deep seawater.

Negative Possibilities: It was found that there are no problems that could produce negative environmental impacts that cannot be managed to prevent undesirable consequences. That is, there are sufficient controllable variables to adjust to any foreseeable situation that might be a problem.

Positive Consequences: There are potential benefits of great magnitude for using cold water discharged from an OTEC plant for secondary uses. These benefits are both economic and helpful to the environment. Additional commerce could be expected from cold storage facilities increasing use of the Port, and from mariculture products. In addition, longer range benefits could be expected

from expanded industry on Guam partly attributable to the availability of cold water for cooling operations.

Recommended Strategy:

1. A conceptual design for the OTEC plant is needed to provide the detailed information for specific design and analysis of the cold water utilization system, and the exact calculation of economic benefits for commercial investment decisions.
2. Given a conceptual design for an OTEC plant, lay out the possible arrangements for cold water distribution in detail: the dimensions, quantities of water pumped, heat exchanger characteristics, etc.
3. With this plan developed, perform a complete cost-benefits analysis to aid in final decisions on facility installation and expansion.

Most Promising Areas of Utilization:

1. Cold Storage, using the cold water directly for cooling of spaces or foods,
2. Modifying the Cabras Island Power Plant condenser cooling system (would be part of OTEC plant construction),
3. Mariculture, to a limited extent in the Apra Harbor area,
4. Cooling water to GORCO, to enhance refinery operation and possible expansion.

Longer Term Potentialities

1. More extensive mariculture, south of Apra Harbor area, using water sent first to GORCO,
2. For expanded industry such as aluminum refining or ammonia production.

SECONDARY UTILIZATION OF COLD WATER FROM OTEC

1. INTRODUCTION

1.1 OBJECTIVE:

The objective of this project was to analyze the possible uses, economic and environmental impact of cold ocean water dischaged from a land-based OTEC plant on Guam, and to furnish the Guam Energy Office with a report of the results of the analysis. The report includes strategies toward developing the economic use of coldwater effluent and of mitigating any possible adverse environmental impacts of effluent discharge.

1.2 BACKGROUND:

The Guam Energy OFfice and Bureau of Planning's Guam Coastal Management Program has been assessing the environmental and economic impact of a land-based OTEC plant at the proposed site on Cabras Island. An "Economic and Land-Use Plan for Cabras Island and Surrounding Area" has been developed, and this study supports and augments this plan.

The installation of an OTEC plant on Cabaras Island will involve a number of direct environmental impacts. These need not be negative, but under controlled circumstances, certain benefits can be accrued. For example, the cold water drawn from the dep ocean is relatively nutrient rich and if properly utilized, can stimulate biological productivity. Warm water dishcarges from existing power plants can be tempered with cold water. Furthermore, an OTEC plant can provide economic enhancement beyond the electric power generated. The cold

water can be used to advantage inconjunction with Port of Guam activities to aid in several commercial areas such as food handling, processing and storage.

Thus the presence of an OTEC plant can provide benefits beyond the electric power generated and the displacement of petroleum needed for conventional power plants. This report describes the analysis and conclusions reached on this topic.

1.3 RANGE OF USES OF OTEC COLD WATER

The possible secondary uses of OTEC cold water might include:

1. For chilling of food produce, including fish,
2. For space air conditioning,
3. As an aid to mechanical refrigeration/freezing systems, to increase the efficiency of operation and eliminate air heat rejectors,
4. To aid in condenser cooling at the existing oil fueled power plants, increasing efficiency and reducing thermal discharges,
5. To provide nutrients for mariculture,
6. To aid certain industrial operations where cooling water is required,
7. As a possible source of minerals from the sea.

These can be grouped conveniently into three main categories:

Direct refrigeration

Assisting cooling systems

Nutrient or mineral source.

1.3.1 Cold Water For Direct Cooling

This projected use would principally be involved in air conditioning or cooling of materials such as foodstuffs (e.g., fish) for cold storage. Here, the temperature of the cold water from the OTEC plant is sufficiently low that it can directly cool either a work space or storage space. In most applications, a heat exchanger would be used to provide cooling of air or fresh water derived from the cold ocean water. Figure 1-1 provides a schematic representation of this class of applications.

1.3.2 Assisting Cooling Systems

This projected use would principally be involved as working in conjunction with a mechanical cooling system, or some process where it is necessary to reject heat. For example, an electric powered mechanical refrigeration system typically uses a set of cooling tubes over which air is forced in order to remove the heat rejhected from the refrigeration cycle. With warm humid air, the removal requires sufficiently large heat exchangers and fans to blow the air over the coils. If cold water were available, the heat could be rejected to the cold water using a suitable heat exchanger. This could be a much smaller unit and could be less costly than tha air cooler, and the lower temperature of the reject side could make the system more efficient (less regrigerant flow required, etc.).

Figure 1-2 illustrates this class of applications for OTEC cold water utilization.

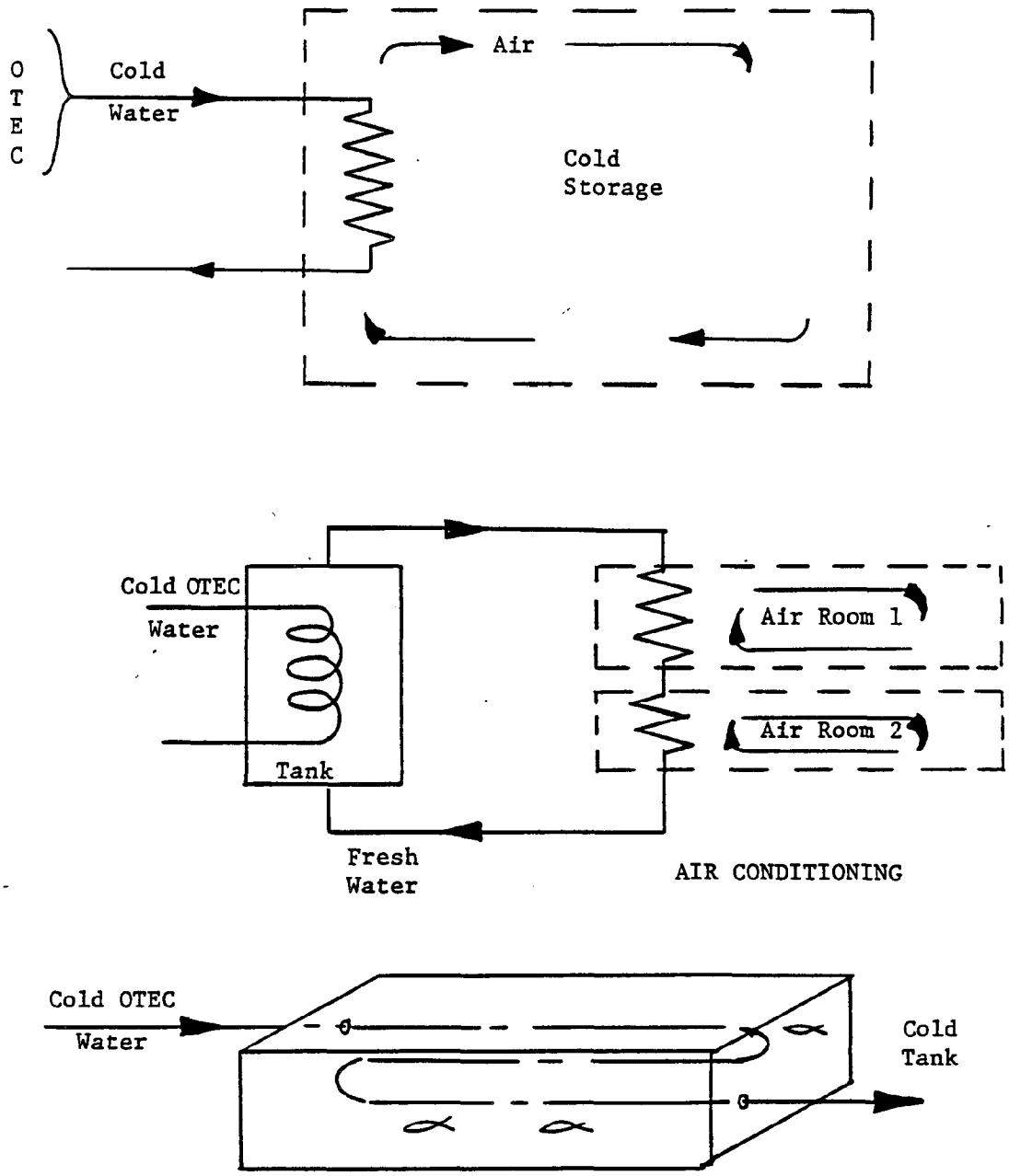

Figure 1-1 Schematic for OTEC Cold Water Direct Cooling

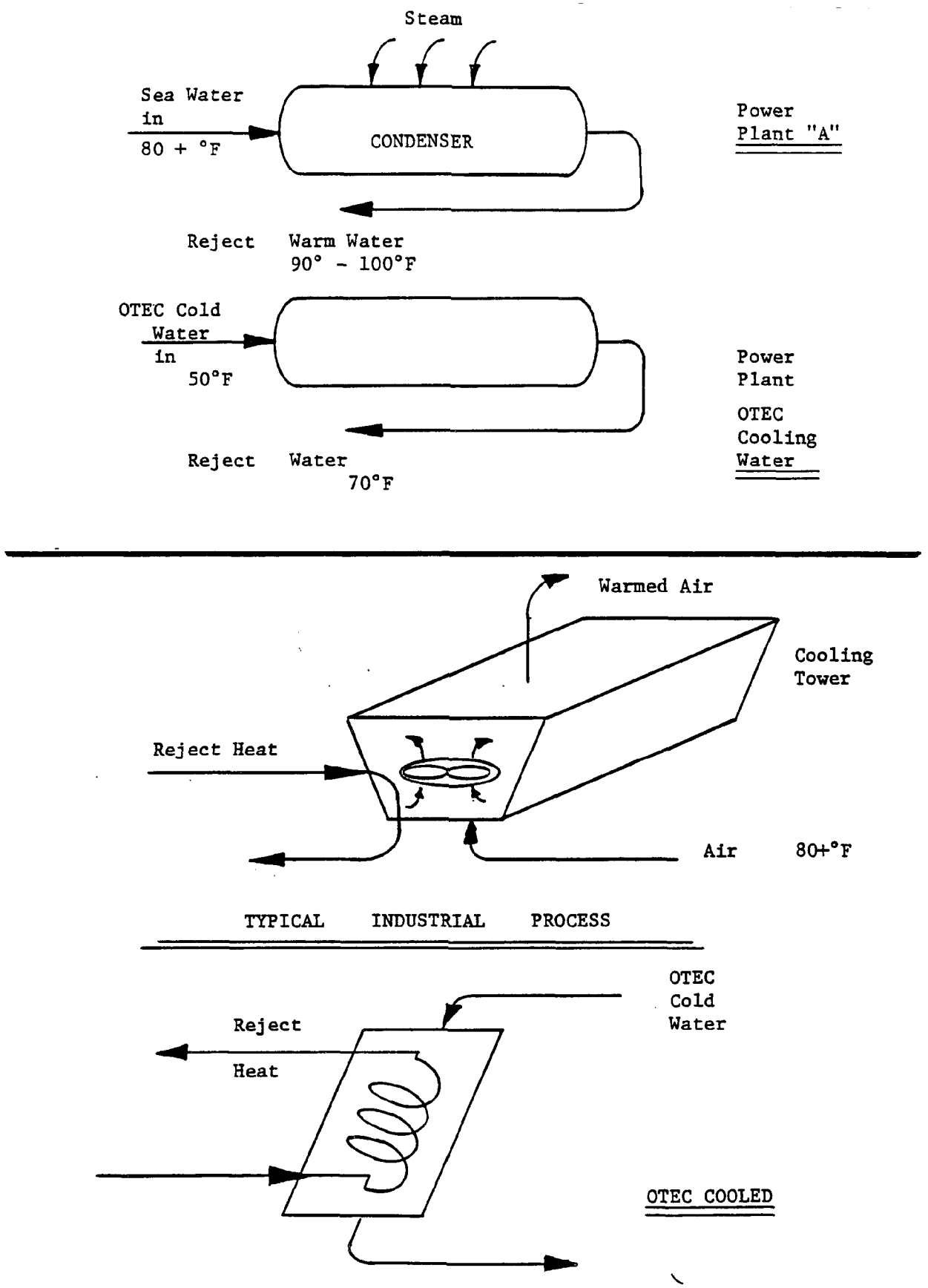

Figure 1-2 Schematic for OTEC Assisted Cooling

1.3.3 Nutrient or Minerals Source

In this class of applications of OTEC cold water, it is recognized that deep ocean water contains relatively higher levels of chemical and organic nutrients for marine life, and that seawater contains low concentrations of certain valuable minerals that can be extracted. The most probably use of OTEC water in this category is in support of mariculture. In mariculture, the sea is "farmed" by providing conditions for higher rates of growth of marine plant and animal life, controlling the growth and setting up conditions where the yield can be harvested conveniently and economically. Certain seaweeds are potential commercial crops, as well as shellfish and some finfish suitable for mariculture.

Seawater contains important and valuable minerals such as uranium. Commercial extraction of these minerals is usually not feasible due to the high cost of pumping vast quantities of ocean water through a separator. But with OTEC already pumping very large volumes of water for power plant operations, the added use of mineral extraction becomes an economic possibility.

Figure 1-3 illustrates this classification of possible uses of OTEC water.

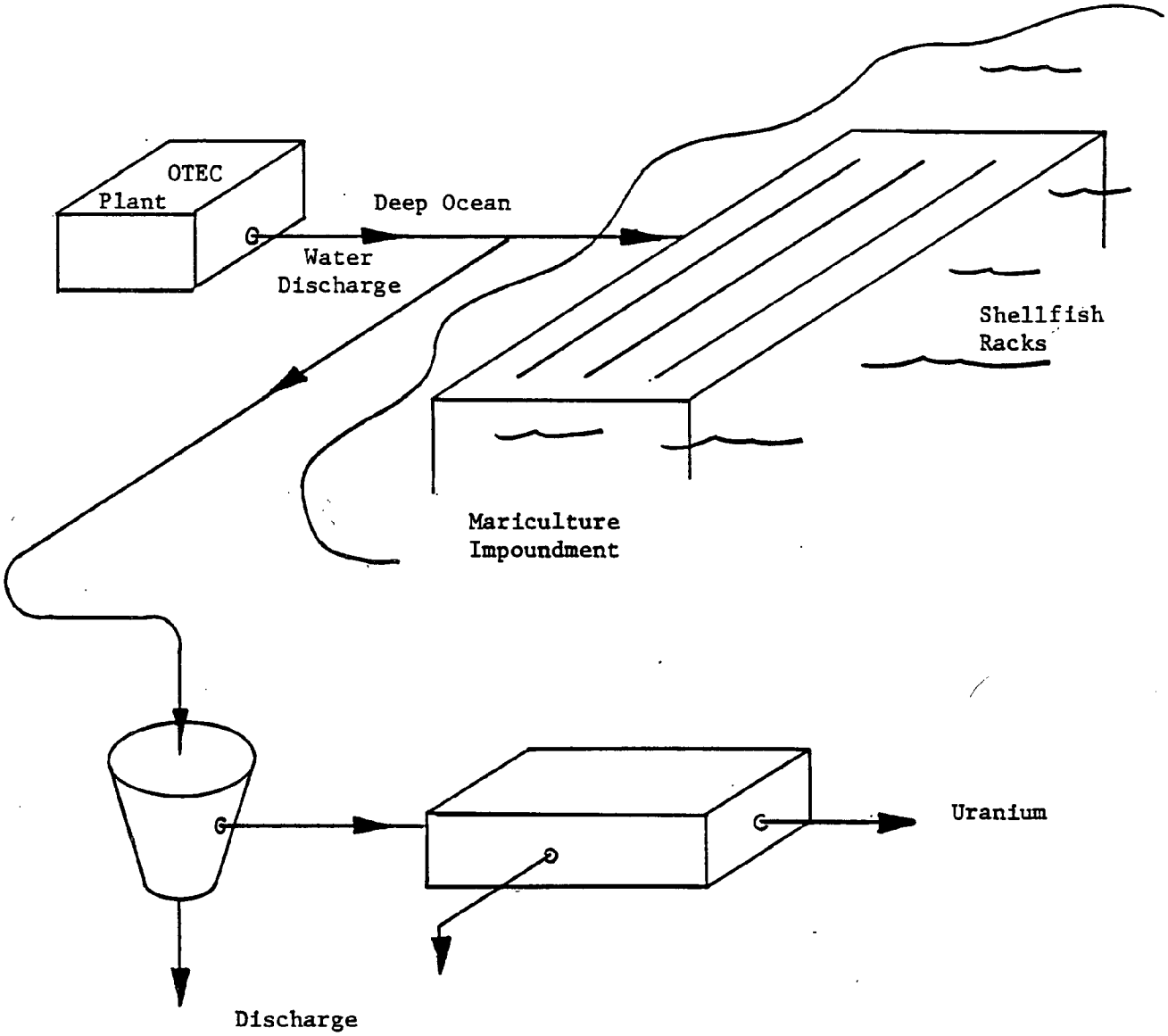

Figure 1-3 Schematic for OTEC Cold Water Nutrient and Minerial Utilization

2. TECHNICAL FACTORS

2.1 OTEC PLANT CHARACTERISTICS

A 50 megawatt OTEC power plant is planned for Cabras Island, Guam. This plant would draw cold water from the deep ocean offshore at a temperature of approximately 40 to 45 degrees F. for use in the OTEC power cycle. Figure 2-1 shows the basic schematic arrangement of an OTEC power plant. The OTEC plant operates on the temperature difference between the warm ocean surface water and the deep cold water, by drawing the energy from warm water in the following power cycle:

1. Warm water is drawn through an evaporator which boils ammonia,
2. The ammonia passes through a turbine which drives an electric generator,
3. Cold ocean water is used to condense the ammonia in a condenser,
4. The ammonia is pumped back to the evaporator completing the cycle.

A very large volume of cold water would be pumped, approximately 500,000 gallons per minute. In the condenser the cold water would experience a slight temperature rise of only a few degrees (F) until discharged from the plant. Thus the cold water discharged from the OTEC plant is still relatively cold. This discharged water could be used for secondary uses, such as refrigeration or mariculture. Alternatively, a small amount of water could be diverted directly to

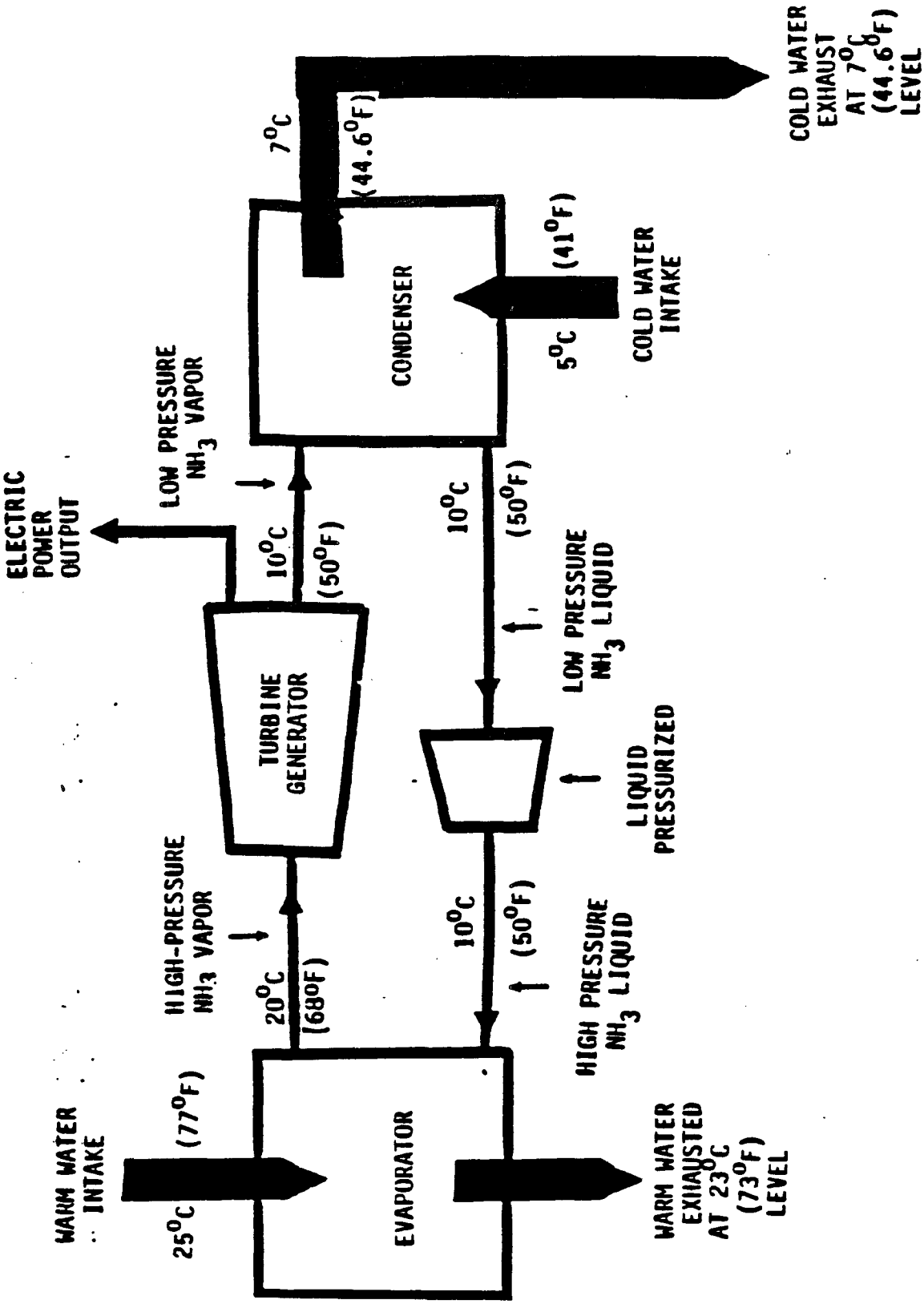

Figure 2-1 Schematic of OTEC Power Plant

2. TECHNICAL FACTORS

2.1 OTEC PLANT CHARACTERISTICS

A 50 megawatt OTEC power plant is planned for Cabras Island, Guam. This plant would draw cold water from the deep ocean offshore at a temperature of approximately 40 to 45 degrees F. for use in the OTEC power cycle. Figure 2-1 shows the basic schematic arrangement of an OTEC power plant. The OTEC plant operates on the temperature difference between the warm ocean surface water and the deep cold water, by drawing the energy from warm water in the following power cycle:

1. Warm water is drawn through an evaporator which boils ammonia,
2. The ammonia passes through a turbine which drives an electric generator,
3. Cold ocean water is used to condense the ammonia in a condenser,
4. The ammonia is pumped back to the evaporator completing the cycle.

A very large volume of cold water would be pumped, approximately 500,000 gallons per minute. In the condenser the cold water would experience a slight temperature rise of only a few degrees (F) until discharged from the plant. Thus the cold water discharged from the OTEC plant is still relatively cold. This discharged water could be used for secondary uses, such as refrigeration or mariculture. Alternatively, a small amount of water could be diverted directly to

a secondary user in order to provide the coldest temperature posible, should that be sufficiently important.

The amount of flow of cold water for most of these secondary uses is estimated to be small in comparison with the large flows required through the OTEC condenser (mineral extraction is the principal exception); therefore, bypassing cold water directly may be a more suitable and economic method of using the dep cold water pumped for an OTEC plant. This is illustrated in Figure 2-2. Generally, the cold water would be used after discharge from the OTEC condenser. This would provide a remaining sufficiently low temperature for most of the applications. In the case of mariculture, where the nutrient content is desired, the higher temperature is desirable; in fact, some warming of the deep ocean water discharge may be needed in the mariculture application. Small quantities of cold water directly pumped directly to a cooling use would tend to be needed for some direct refrigeration uses where the lowest temperature achievable is required.

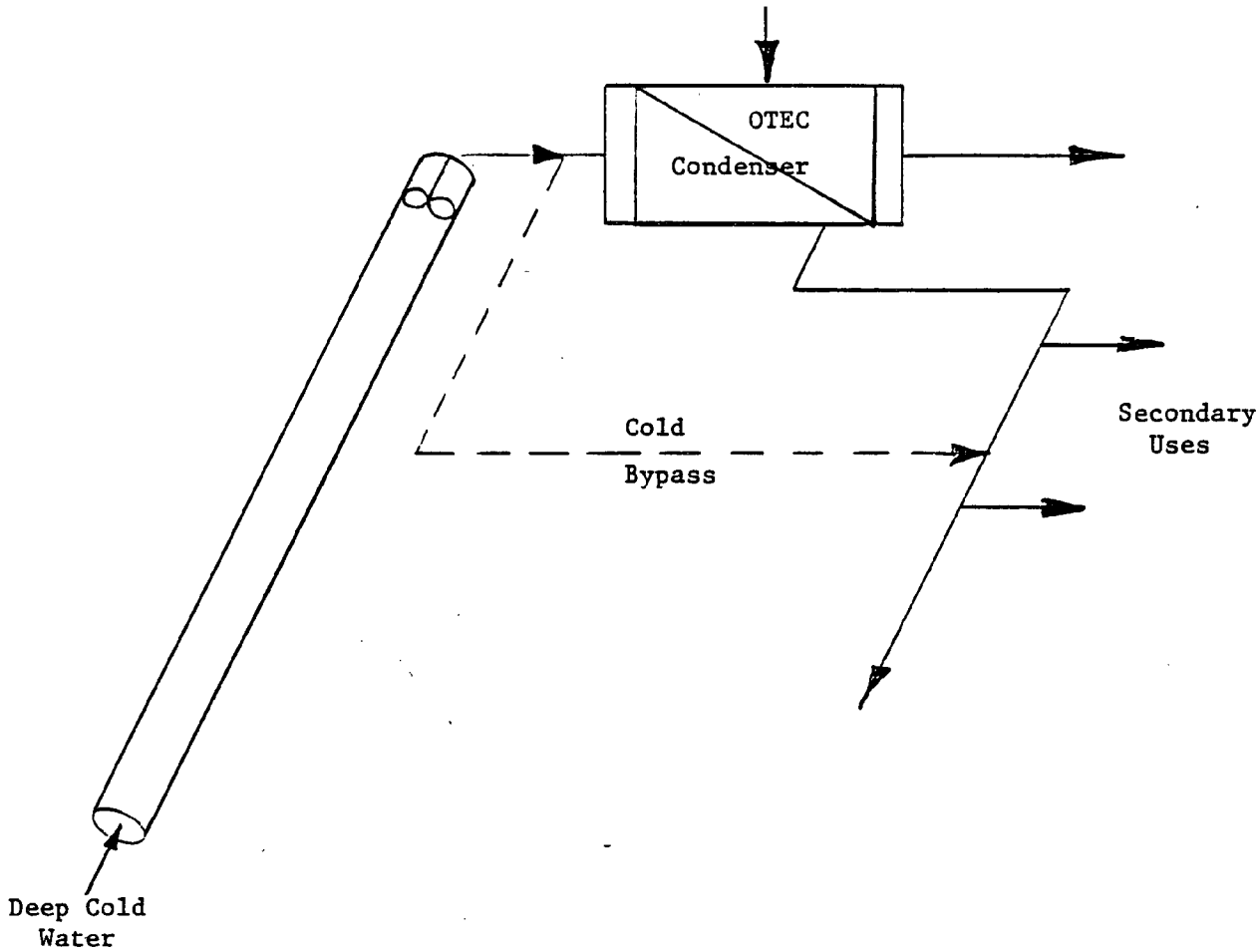

Figure 2-2 Schematic for OTEC Cold Water Bypass

2.2 PHYSICAL AND COMMERCIAL CHARACTERISTICS OF THE OTEC SITE

2.2.1 Port of Guam

The port facilities are operated by the Port Authority of Guam. In Apra Harbor, the Port Authority's terminal facilities are located on 33 acres of reclaimed land on Cabras Island. Along 2725 lineal feet of dock area, the depth of the docks average 28 to 35 feet. Much of the activity at the port is container operations, and the container terminal covers 12 acres. Two large breakbulk warehouses contain a total of 108,000 square feet of storage space, and another shed area contains 24,000 square feet of cargo space.

The total Port Authority annual revenue is in excess of $8,000,000. The annual tonnage of cargo is over 100,000 tons, having a reached a level of over 200,000 tons in 1978. Tuna tonnage handled is approximately 15,000 tons each year. Vessels calls per year at the port are approximately 100 per year for each of container ships, breakbulk ships, and tankers. Over 200 fishing vessels call per year, having reached a total of 267 in FY 1979. Most of these are Japanese.

Of particular importance to this analysis of potential OTEC cold water uses, is the fact that Apra Harbor and the Port of Guam is one of the best ports the western Pacific. There is room for expanded growth of industrial and commercial activities should conditions favor a greater usage, particularly if an industry could develop which would take advantage of the superb harbor facilities. Over 373 acres of land bordering Apra Harbor have been identified by the U.S. Department of Defense as excess land which can be released.

2.2.2 Cabras Island and Vicinity

The principal features of Cabras Island is the Port of Guam and the power plant complex owned by the Guam Power Authority. The proposed OTEC plant site is seaward of the Cabras Power Plant, adjacent to the warm water discharge canal from this plant. From the shoreline, the ocean bottom slopes off at a very steep angle, over 30 degrees at most parts and greater than 45 degrees for much of the drop-off. The distance to a water depth of 600 meters is less than one mile. At this depth, the water temperature is approximately 45 degrees F., providing a temperature difference from the surface of 40 degrees, very suitable for OTEC. Thus it is feasible to lay a cold water intake pipe along the slope of the ocean floor from the shoreline to deep water, and to locate the OTEC plant on land. This greatly reduces the projected cost of an OTEC plant and makes this site one of the best in the world for OTEC.

Presently warm water from the Cabras Power Plant is discharged through a surface canal into the ocean just to the eastward of the OTEC plant site. Therefore, it is possible to redirect this hot water through the OTEC plant adding to the thermal resouce, and by mixing this with the cold water discharge, to eliminate the thermal plume from the outfall.

To the south of Cabras Island is an area of tidal flats, on either side of Drydock Peninsula. The area on the southern side is particularly large, and could be a possible site for mariculture. Figure 2-3 shows these arrangements and areas of interest.

Approximately three miles to the south of Cabras Island is the Guam Oil Refining Company (GORCO), with a petroleum pipeline

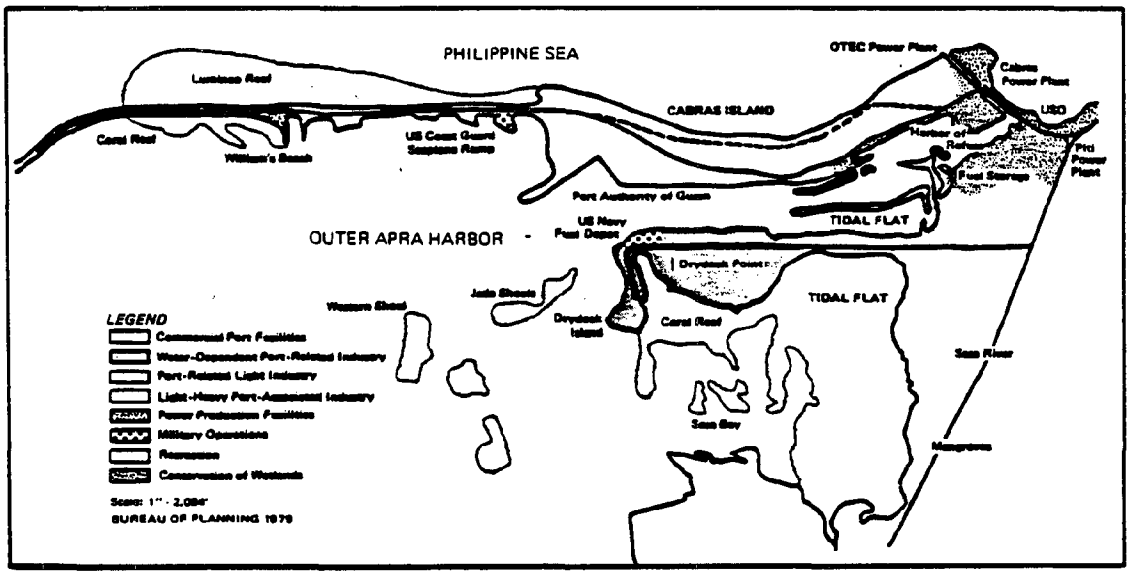

Figure 2-3 Cabras Island Guam OTEC Site

connecting the Port to the refinery complex. The refinery occupies approximately 500 acres of land, and has a capacity of 35,000 bbl/day. Expansion is reported limited by availability of water. Cold water from OTEC could be of use to a typical refining operation, particularly where water supplies are limited.

The major population and commercial center, Agana, is approximately 5 miles from the OTEC site on Cabras island. One of the major areas requiring air conditioning is the hotel area on Tumon Bay, approximately 9 miles from the OTEC site. It is conceivable that cold water could be piped to either or both these areas for space cooling, although the economic suitability requires substantiation.

2.2.3 Environmental Data

The vicinity of the OTEC site and the neighboring commercial facilities is characterized by:

1. A tropical reef, Luminao Reef,
2. A relatively barren ocean, nutrient poor near the surface,
3. A relatively undisturbed estuarine system,
4. A system of embayments, including tidal flats and mangrove stands,
5. A very large and deep harbor.

The harbor operations include commercial and military ship movements, and petroleum tanker offloading. Power plant condenser cooling water is drawn from the ocean to the eastward of Cabras Island, and discharged to the ocean northward through a canal through the island. Indicative of the relatively low biological activity of the ocean

water is the near absence of biofouling in the power plant condenser to the extent that chlorination is not required(!).

An assessment of the environmental conditions and potential impacts of an OTEC plant on the environment is contained in a study performed by Dames & Moore for the government of Guam [1] *. The oceanographic conditions are described in a report on this topic by the University of Guam Marine Laboratory [2] .

Figure 2-4, reproduced from Reference 2, shows the deep ocean water temperature off Cabras Island. It is seen that 45 degree F. water is achievable at a depth of 1500 ft. and that 41 degree F. water is available at 2800 ft. depth. It is noteworthy that most OTEC applications require reaching to a 3000 ft. depth to achieve 45 degree water. This points out one of the great advantages of Guam for an OTEC site.

Figure 2-5 shows the nutrient content of the ocean water off the OTEC site. It can be seen that the surface water is relatively nutrient poor, typical of tropic ocean waters. By contrast, the deeper water is relatively nutrient rich, indicating the possible use of this water for mariculture activities.

* Numbers in brackets refer to References contained in Bibliography

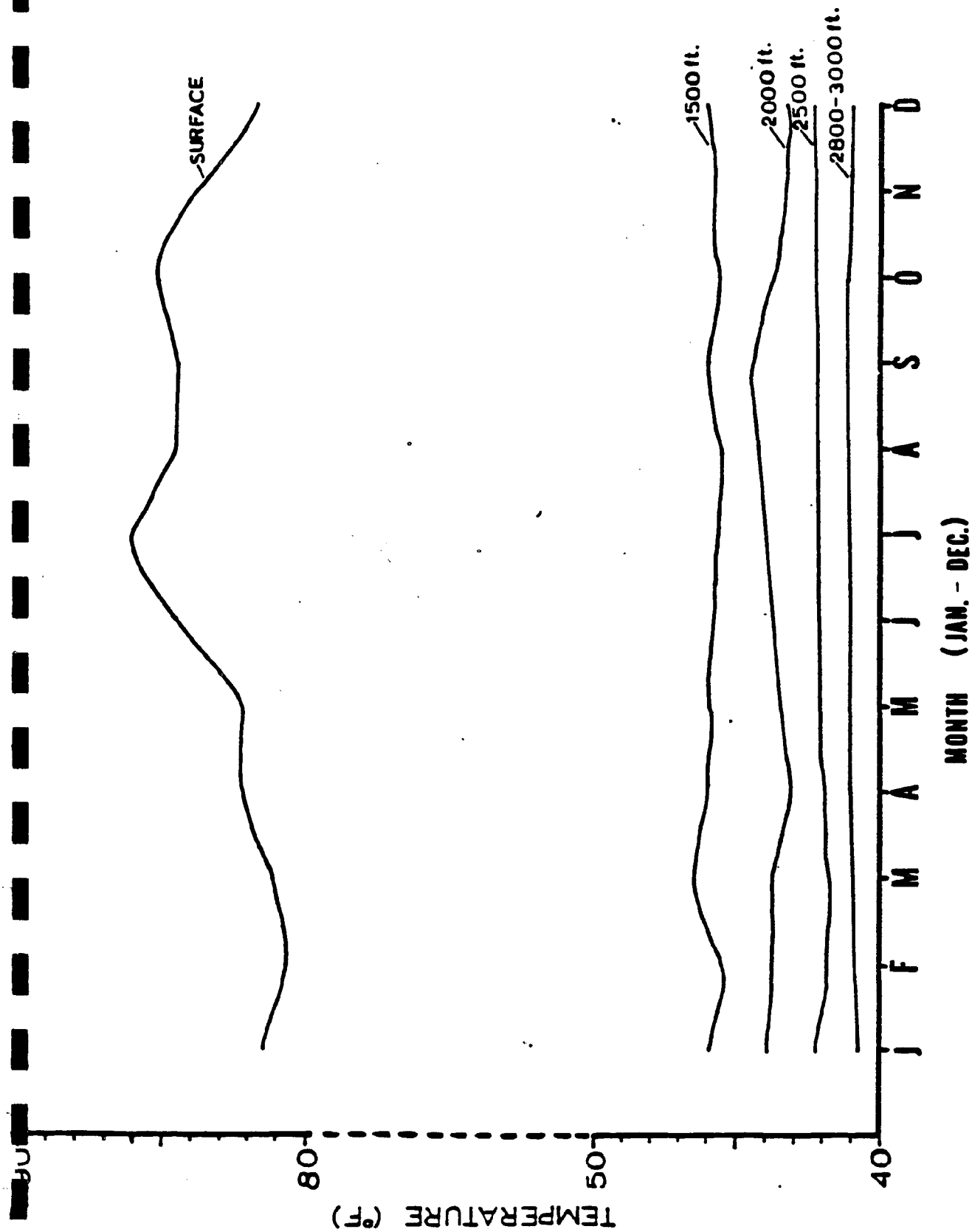

Mean monthly temperatures for surface, 1500, 2000, 2500 and 2800-3000 ft in the vicinity of Cabras Island, Luminao Reef and Glass Breakwater, Guam.

Figure 2-4 Seasonal Temperature Variation Cabras Island

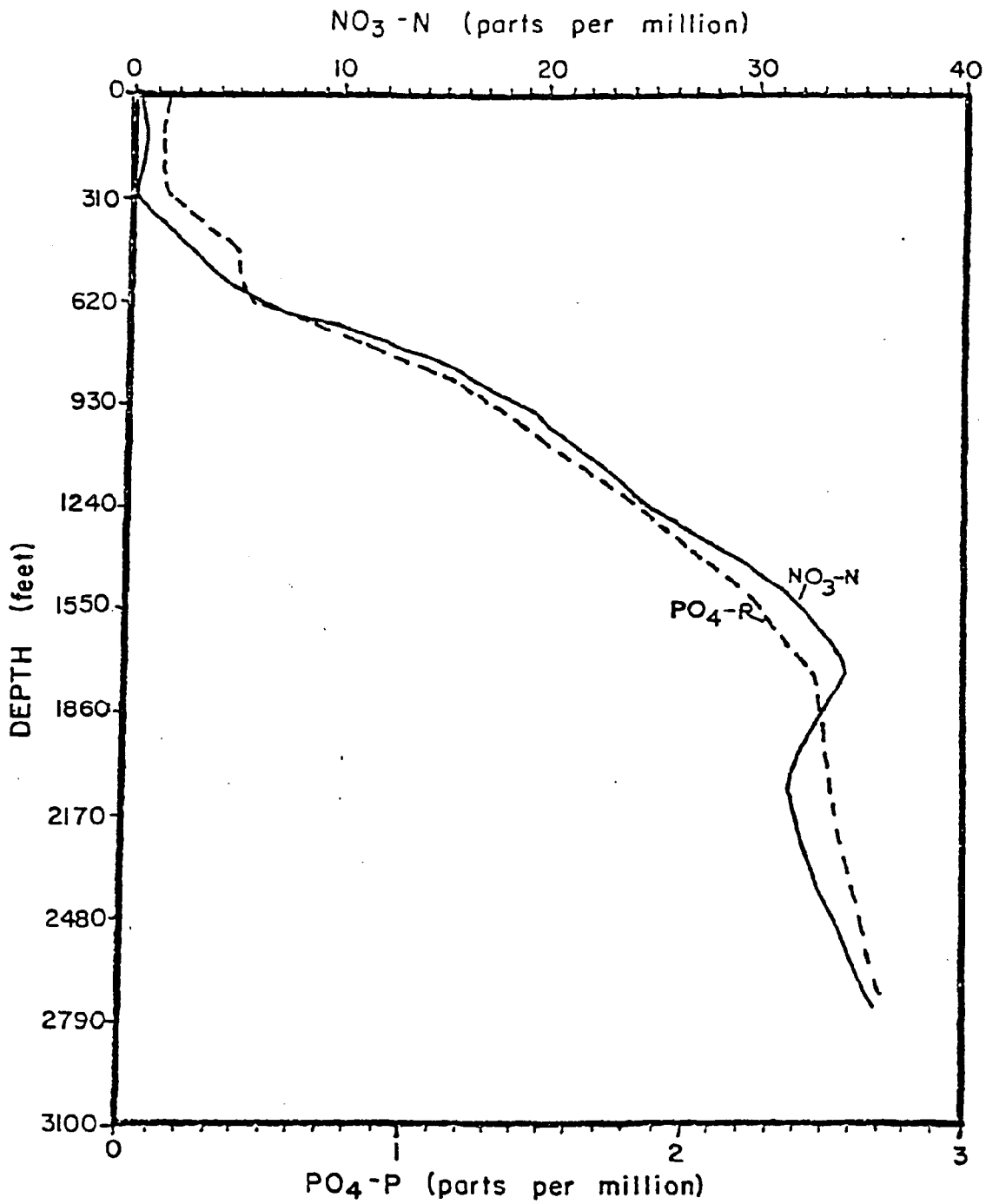

Figure 2-5

Mean nitrate-nitrogen (NO_3-N) and reactive phosphorous (PO_4-P) profiles from surface to 883 m (2900 ft) in the vicinity of Cabras Island, Luminao Reef and Glass Breakwater, Guam (Feb., 1978 - Feb., 1979).

3. APPLICATIONS OF OTEC COLD WATER UTILIZATION

3.1 DIRECT REFRIGERATION OR COOLING

3.1.1 Introduction

Cold water from OTEC could be used directly for cooling of either materials such as foodstuffs, or of air spaces for air conditioning. Rather than use electrically powered mechanical cooling and refrigeration systems, cold water from the deep ocean can be used under certain conditions. The temperature of the cold water drawn from the deep ocean off Cabras Island for OTEC can be as low as 41 degrees F. and would probably not be above 45 degrees F. In passing through the OTEC plant, the cold water temperature will rise only a few degrees, thus will remain below 50 degrees F. For some applications, this will be sufficiently cold. For others, the coldest water will be required and cold water would have to be delivered directly, bypassing the OTEC condenser. The cold water temperature is limited to 41 degrees F. or higher so that applications must be above freezing temperatures. However, cold water can be used to precool so that freezing can be accomplished with less net energy.

For utilization of cold water from OTEC for direct cooling, proximity to the cold water is the primary requirement. This will allow piping systems for delivery of the cold water to be reasonably short. Some special situations may permit relatively long runs of cold water piping.

3.1.2 Cold Water Quantities Required

Every pound of cold water absorbs 1 BTU for each degee F. rise in temperature. Cold seawater, with a density of 64 pounds per cubic foot, flowing through reasonably sized piping, has the capacity to absorbe large quantities of heat and provide effective cooling. Appendix A summarizes the calculations for relating air conditioning and refrigeration to cold water flows through heat exchangers. The results are summarized in Figure 3-1, which tabulates the flow rates, flow areas, heat exchanger sizes, etc. needed to provide cooling.

3.1.3 Physical Arrangements

A temperature of 45 degrees F. is suitable for holding produce or fish and is similar to temperatures of electro-mechanical refrigerators. However for extended storage of fish, a lower temperature may be required. This would require additional cooling by electro-mechanical means beyond the capability of direct cooling by OTEC cold water.

The use of OTEC cold water for air space conditioning could be readily be accomplished with OTEC cold water, but the amount needed in the near vicinity of the OTEC site is quite limited. To be an effective utilization in large amounts, the cold water would have to be piped to Agana or beyond, if economically feasible. It is not projected that this would be an economic system; therefore, the realistic utilization of direct cooling by OTEC cold water is in cold storage wharehouse applications in expanded facilities at the Port of Guam or new sites around the harbor, or for use by industries. In this application, piping cold water to the refinery is feasible. The

A 1 ft. Diameter Pipe Provides:

Flow rate = 1.96 cu.ft./sec at flow velocity of 10 fps.

Thermal energy exchange = 628 BTU/sec at temperature rise of 5° F.

Regrigeration equivalnt = 188 tons

Space Cooling Capability of Cold Water Flow

Nominal 8' x 8' x 50' van requires: 1 ton refrigeration for internal temperature of 45 to 50 °F.

Nominal 1 ft. pipe can cool a 200' x 200' warehouse.

Figure 3-1 Flow Rates, Areas, versus Heat Exhanger Sizes

major advantage of having large amounts of cold water available would tend to be in support of new industry which could take direct advantage of this resource. Aluminum processing or ammonia manufacture would be particularly suitable for utilization of OTEC discharge cold water. Having copious supplies of cooling water would be a strong attraction to such industry, in addition to the other advantages offered by a Guam site.

3.1.4 Savings of Energy and Cost

The calculations of savings in electric power and energy cost from using cold ocean water for cooling are also included in Appendix A. The results are summarized in Figure 3-2, showing that the savings can be appreciable, savings that could be obtained by using OTEC cold water, particularly if cold water were to be used by expanded industry, would be considerable.

ELECTRIC ENERGY REQUIRED FOR REGRIGERATION:

Each ton of refrigeration requires 10 kW power (33% efficiency)

COST SAVINGS FROM PIPED COLD WATER:

For 188 tons refrigeration - equivalent to cold water in a 1 ft. pipe

electric power cost savings = $197,000 per year.

Figure 3-2 Potential Savings in Energy and Cost

3.2 INDIRECT ASSISTANCE TO COOLING SYSTEMS

3.2.1 Precooling

In the operation of refrigeration systems, warm fluid (air or water) is drawn over the cooling surfaces to lower the temperature. In the case of refrigeration or freezing of food produce, the food material may be near natural air temperatures and have to be cooled before low temperature storage or freezing. Thus if the temperature of the fluid or food material coming into the refrigerator or freezer is precooled to some degree, the total energy required for the final lowering of temperature by the electro-mechanical system is reduced. Figure 3-3 illustrates the concept of precooling.

The savings in energy and cost of electricity are calculated to be significant if the equipment needed for precooling is part of a total system for circulating OTEC cold water for multiple purposes and several users. Then the cost of precooling would be that of the individual heat exchangers for each application. Appendix A contains the calculations reflecting the energy savings and cost estimates.

3.2.2 Providing Heat Dissipation for Cooling Systems

Many commercial and industrial processes involve an electro-mechanical or thermal process where heat must be rejected and dissipated from the system. For example, a mechanical refrigerator uses energy to draw heat from the refrigerated space and reject the heat through some device, typically an air cooled set of coils, a cooling tower or similar device. Cold water from OTEC could be utilized as a replacement for the air coolers. Figure 3-4

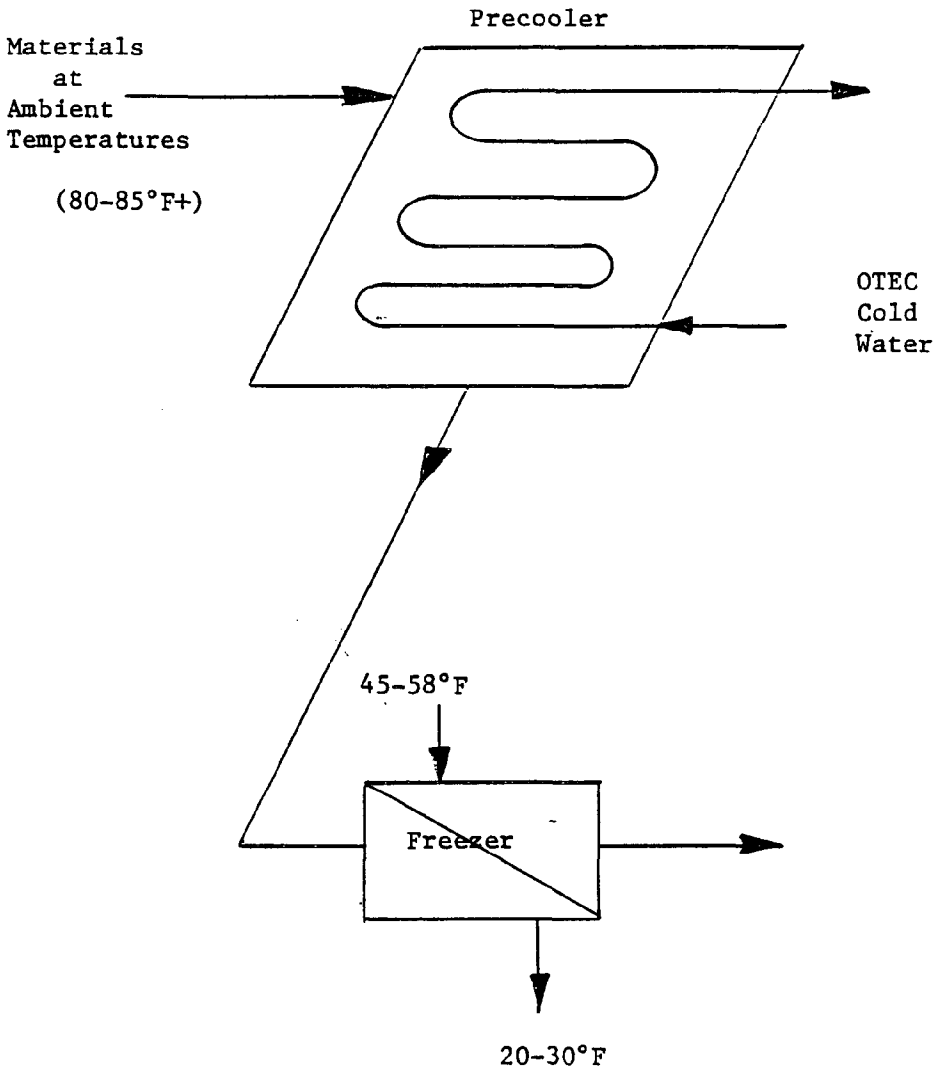

Figure 3-3 Schematic for OTEC Pre-Cooling

illustrates the conventional and OTEC-modified arrangements. A refrigerant-water heat exchanger would be employed in place of the refrigerant-air heat exchanger. This is particularly useful in the warm, humid climate of Guam where the efficiency of air cooled heat exchangers is relatively low, and as a result, larger units are required. The amount of heat exchanger area required is related directly to the temperature difference between the refrigerant and the air, or in the case of water cooled, between the refrigerant and the water. Using cold ocean water would provide a much larger temperature difference, and thus a lower amount of heat exchanger surface area. Furthermore, the heat transfer from refrigerant to water is more "efficient" than from refrigerant to air; i.e., the heat transfer coefficient is much higher.

Another application where water cooling can assist is in chemical-industrial processes such as petrolelm refining. These operations also require rejecting heat, and large air cooling towers are typically seen at petrolelum refineries or petro-chemical plants. Similarly, industrial plants such as for aluminum processing or ammonia manufacture need heat dissipation systems and often use air cooling towers. Having cold ocean water available would aid in ths design of these plants, and be an influence in attracting such industry to Guam.

Finally, cold ocean water can be useful in steam condenser applications, such as power plants. In the existing power plant on Cabras Island, ocean water is drawn in to condense the steam exhausted from the turbine. This water is raised in temperature as it receives the heat rejected from the steam power plant, and the

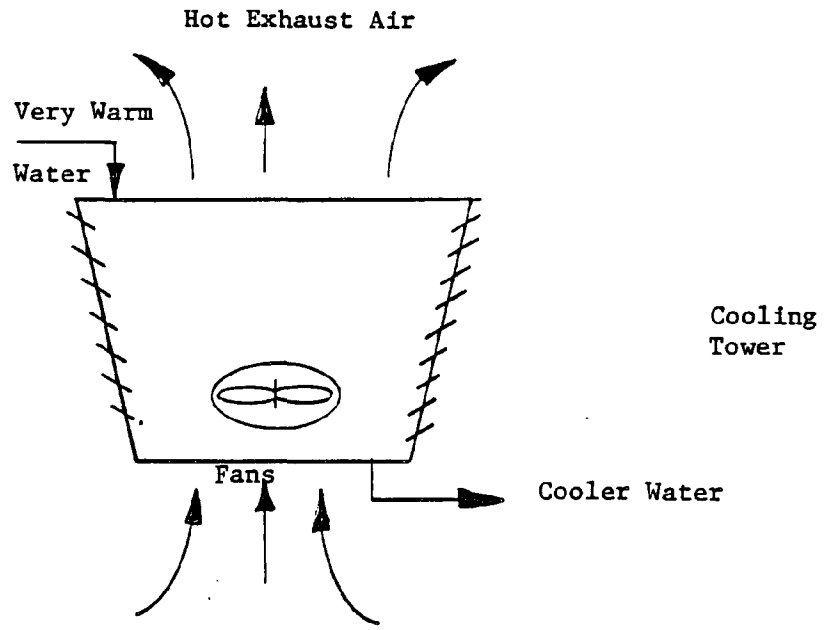

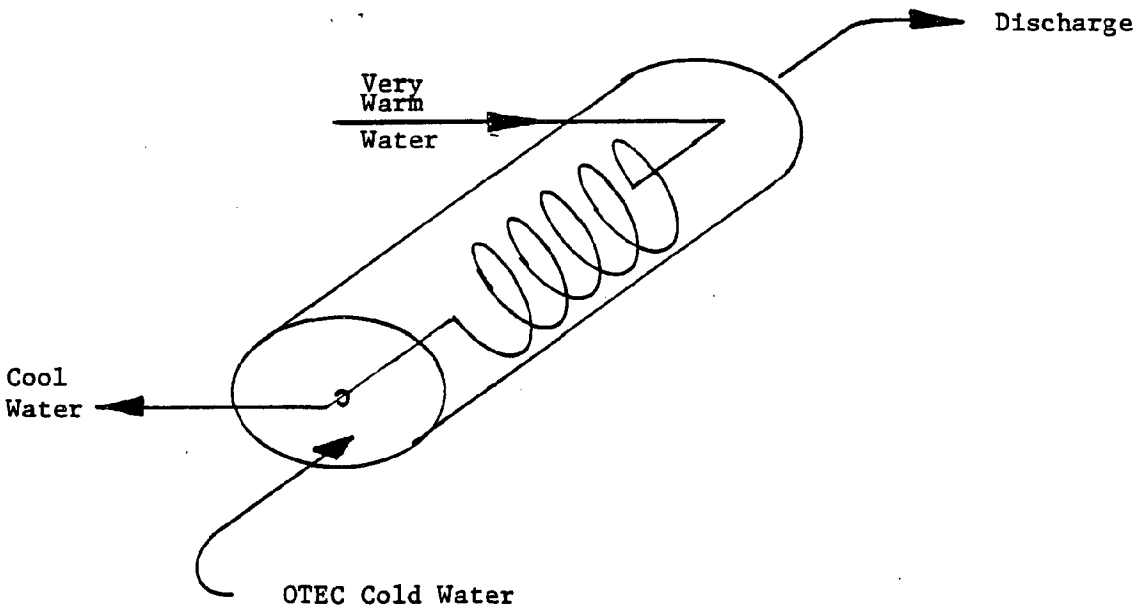

Figure 3-4 Schematic for OTEC Assisted Heat Rejection System

heated water is discharged from a surface canal to the ocean. The efficiency of the power plant can be lowered if the incoming ocean water is too warm. Providing cold OTEC water to the steam plant condenser intake could provide a higher thermodynamic efficiency for plant operation and would correspondingly lower the temperature of the condenser discharge. In fact, OTEC cold water provides the means of totally eliminating thermal pollution from any power plant source. However, another arrangement would direct the discharge water from the Cabras Island Power Plant to the warm water intake of OTEC, where it would be added to the intake of warm surface ocean water. After passing through the OTEC evaporator, this warm water would be mixed with the cold water discharge for release back to the ocean. In this arrangement, the added heat in the Cabras Island Power Plant condenser discharge water would improve the efficiency of the OTEC power plant, and produce the most net gain in arrangement.

3.3 MARICULTURE

3.3.1 Introduction

The open ocean, approximately 90% of its surface, has been described as a biological desert in that it produces a neglibable amount of fish catch for world food. Coastal regions, in general, comprising approximately 10% of the ocean surface, yields about half the fish catch. One tenth of one percent of the ocean surface area produces the other half. These are the regions of upwelling where deeper ocean water, richer in nutrients, come to the surface water region. Most fish gathering is done in a relatively primitive way, comparable to the hunting economy of previous centuries. Farming the sea may provide a greatly expanded source of food and other useful products. Mariculture provides one of the possible means of increasing the yield of seafood in a controlled manner.

The deeper water in the ocean is far more rich in nutrient materials than the surface waters, particularly in the tropics. Figure 2-4 had shown the concentration of two important biological nutrients, nitrates and phosphates, in the ocean off Cabras Island. It is clearly seen that the surface waters are relatively nutrient poor, while the deeper water is relatively rich. The process of pumping deep cold ocean water for an OTEC plant therefore delivers a large quantity of nutrient rich water for possible use in mariculture, i.e., stimulating marine biological growth to yield a useful crop for food or other uses. The nutrients aid in the growth of algae, most typically diatoms or kelp-like plants. The principal usefulness of culturing algae is as an intermediate food for higher

biological forms which may be food for humans. Certain shell fish are very suitable for this type of mariculture, particularly clams or oysters. A finfish, the milkfish, is very suitable for mariculture and is presently extensively "fish farmed" in Asia.

Much work which is relatable to Guam has been carried out in St. Croix in the Virgin Islands. The physical and oceanographic conditions are similar, and the experiments conducted there can provide an indication of what may be expected at Guam.

Much of mariculture is hampered by the lack of available nutrients. In the St. Croix tests, deep ocean water was pumped and discharged into coastal ponds or impoundments inside the reefline. The cost of equipment to pump the deep ocean water, including the long pipeline, and the power requirement for continued pumping act as impedements to extensive use of this method. OTEC obviously provides a virtually free supply of this nutrient laden water. Care must be exercised in the amount of discharge introduced into the mariculture system, particularly with respect to temperature control; but the flows are readily controllable.

Mariculture can take many forms, ranging from direct feeding of fish in aquatic pens, to pumping nutrient rich water to stimulate algae. The use of deep ocean water discharged from an OTEC plant, for mariculture falls more in the latter category; however in practical application, a complete mariculture system may involve several biological levels and include higher animal forms which feed on the plant growth stimulated by nutrient laden deep ocean water. Therefore, mariculture connected with OTEC can be considered as leading to both plant (algae) and animal (fin fish and shellfish)

yields.

3.3.2 Algae

Two major forms of marine plant life, or algae, are most probable of importance to mariculture on Guam: seaweed and diatoms. Seaweed may be important as a direct crop used for chemicals and other applications not directly applicable to food, and as part of a complex of species enhancing the culture of edible forms. Diatoms may be important as a means of converting the nutrients in the water to life-forms and eventually as food for shellfish.

Although some seaweeds are eaten by humans in limited regions and in limited amounts (e.g., Laminaria in Japan), most uses are for natural chemicals. Red and brown algae, such as kelp, are harvested in many parts of the world to produce agar and other substances which yeild products such as gels used in baking and food thickeners. The market for these materials is increasing, and could provide a significant cash crop for mariculture. Some seaweeds tend to enhance the growth of fish colonies, particularly in open tropical waters where shade from direct sunlight is important.

Diatom growth, stimulated by nutrient rich water, can be important to shellfish growth. Certain species of clams, oysters and other crustaceons are suitable to controlled culture provided quantities of nutrient rich water is available in areas suitable for impoundment. One of the limitations on this approach to mariculture has been the deep ocean water, and much of the cost of the product can be attributed to the cost of equipment and power expended to pump the deep water to the surface. With OTEC providing this virtually

free, mariculture through diatom nourishment for shellfish uptake is far more economically feasible.

Thus algae mariculture probably would involve both the growth of seaweeds, as part of the ecosystem and for harvest for chemical products, and the growth of diatoms as eventual food for shellfish in impoundments.

3.3.3 Shellfish

As indicated in the previous section, oysters and clams may be grown in mariculture farms as a result of OTEC providing nutrient rich deep ocean water for diatom growth. Experiments conducted in St. Croix, Virgin Islands, indicate that if suitable impoundments can be established, that the succession of algae to shellfish is quite feasible. To become economic, the total process must be carried out with low cost equipment, minimal cost for operational supplies and labor. The cost of providing deep ocean water can be slight to negligible as a result of OTEC, therefore shellfish maricultlure can be a profitable industry on Guam, both for local consuption and export.

3.3.4 Finfish

Most species of fish desired as food are carnivors and not readily suitable for mariculture, unless smaller feed species are cultured. Generally, the more layers or levels through which a mariculture process must pass, the greater the overall cost. Thus direct mariculture of seaweed is economically favorable. Culture of diatoms for further culture of shellfish is relatively favorable. A

three level system, culturing algae for small herbivors as food for the final food fish, would appear to be too many steps to be economic. However, it is possible that certain specific conditions could be favorable. However, there are certain herbivorous fish that are useful for food. The so-calledl milkfish (Chanos Chanos) is fish-farmed in Indonesia and Phillipines. This could be a very desirable species for ultimate consumption.

3.3.5 Conclusion

It is probable that a successful mariculture project would involve several species and more than one layer of culture. Both seaweed and diatom algae would be useful for direct product yield, in the case of certain brown algae, and as an intermediate step for shellfish or finfish harvest. The physical conditions of available impoundments are of primary importance, as this will affect the cost of installation and operation of such a commercial enterprise.

4. IMPLEMENTING THE UTILIZATION OF OTEC COLD WATER

4.1 SHORT TERM UTILIZATION

There are certain immediate applications for OTEC cold water that could be implemented readily, particularly for existing needs, or for relatively short-term expansion of facilities. These are principally:

(1) Tying in to Cabras Power Plant

(2) Providing cool water to Port of Guam for air conditioning and refrigeration,

(3) Cooling water to Guam Oil Refining Company,

(4) Small scale mariculture.

The principal basis for the short term applications is low cost distribution of the cold water to users that have existing needs for the cold water.

The tying in of the Cabras Island Power Plant would be accomplished as part of the construction of the OTEC power plant. Most probably, the warm water discharge from the existing power plant would be directed to the OTEC warm water intake, and thus would be part of the intake installation for the OTEC plant.

Supplying cold water to the Port of Guam could be accomplished by relatively low cost piping in shallow trenches running directly from the OTEC site for the short distance to the Port of Guam. From this point, the cold water would be distributed to a few heat exchangers for air conditioning and refrigeration. From here, the cold water, now warmed a few degrees in the chill water refrigeration

and air conditioning systems, would be further piped to an area south of Drydock Island for mariculture. The piping would be of minimum cost, probably PVC, and would be exposed as much as possible to the surface to warm the water before release into the mariculture area.

The providing of OTEC cold water to the GORCO area would be the most ambitious effort, but could have longer range benefits. This would require the installation of several miles of pipeline to the refinery area. After use in the refinery, the cold water effluent would be pipelined to the coastline further south for release. At this location, a potential future large scale mariculture project could be installed. The scale of this installation and the magnitude of costs and operations are such that this could be more a long term utilization than a short term one. However, the initial usage is for an existing industrial facility, GORCO, and thus falls within the category of a near term utilization.

4.2 LONG TERM UTILIZATION

There are applications for OTEC cold water that could be implemented sometime in the future, along with the development of expanded facilities or the addition of new industries into Guam. In fact, the availability of OTEC electric power and OTEC cold water byproduct could attract some energy intensive industries, such as aluminum refining or ammonia production. Exapanded facilities might include food freezing, processing and transhipment facilities at the port. A large scale, commercial mariculture development could be included in expanded commerce. Indeed, Guam could be one of the world centers for mariculture with the availability of copious amounts of nutrient laden deep ocean water. To enjoy the benefits of such expansion of commerce, provisions for cold water utilization would have to be made at the earliest stages of design of the first OTEC plant on Guam.

The following steps are considered key to implementing long term utilization of OTEC cold water:

(1) Develop a master plan, or as a sub-section of a Guam economic development or port development plan, include a layout of cold water piping systems that could be included in future expansions.

(2) Inform all potential users of expanded facilities of the availability of cold water from OTEC.

(3) Insure that no specific environmental permits are required for any individual user of cold water; i.e., prequalify the use

of OTEC cold water by a generic environmental permit.

(4) Run controlled experiments, including discharging deep cold ocean water into significant areas to measure the effect, if any, on the environment. This might be part of the program to obtain the generic environmental permit in (3) above.

5. ECONOMIC IMPACTS OF OTEC COLD WATER UTILIZATION

5.1 CONSTRUCTION COSTS

There are two main sectors in construction costs: piping and heat exchangers. The piping cost varies considerably with the type of material used, the degree of insulation, if any, and the burial or physical protection measured used in installation. The heat exchangers will tend to have a standardized cost per unit of heat transfer area. The cost of heat exchangers are thus relatable directly to the amount of cooling being provided.

The pipeline cost is similar to electric power transmission facilities in that they represent an initial capital cost and are expected to require relatively low maintenance costs. This analogy also provides a means of understanding why cold water distribution must be limited to large volume users with relatively short transmission distances. An electric power line can be installed overhead with much smaller cost per unit energy transferred than a cold water pipeline, for either small users or over long distances. Therefore, the estimated pipeline installation has been limited to the vicinity of Apra Harbor.

The construction cost estimates are included in Appendix C. These are detailed out for the following cases:

1. Cold water to Port of Guam for reefers and air conditioning,
2. Cold water tie-in to Cabras Island Power Plant,
3. Cold water for mariculture in Apra Harbor vicinity,
4. Cold water to CORCO and distant mariculture complex.

All cost estimates are based on unit values, thus if the estimated

costs of any given unit is varied, the total construction cost estimate can easily be adjusted. For example, a unit cost of pipeline for a given diameter per foot length is used. If one can obtain pipe at a different cost, the estimate can be adjusted by a simple multiplication factor.

Cost formulas are either of two forms for pipeline or heat exchangers respectively:

For pipeline:

DIAMETER X COST/LENGTH X TOTAL LENGTH X FLOW FACTOR X TEMPERATURE FACTOR

For heat exchangers:

COST/UNIT AREA X TOTAL AREA X TEMPERATURE FACTOR

5.2 EMPLOYMENT RESULTING FROM OTEC COLD WATER UTILIZATION

There will be two principal areas where employment will be generated as a result of the utilization of OTEC cold water: employment associated with construction, and emmployment associated with operations.

Employment during construction will be a result either of the installation of cold water piping and heat exchangers, or as a result of expanded construction to take advantage of the availability of ocean cold water. The latter category will generate the largest block of employment since this could include new plant facilities which are a direct result of the cold water opportunity.

The employment resulting from piping and heat exchanger installation has been calculated, as shown in Appendix D, to involve construction-type labor, and will produce 2345 man-days of labor for the near-term installations in support of food produce regrigeration and air space conditioning, and mariculture. Power plant condenser cooling water modifications (to divert the warm water discharge into the OTEC intake) are considered to be included in OTEC plant construction costs. Most of this labor could come from native sources with only limited importation of labor needed.

The employment resulting from new plant facilities can be extensive. It is considered that at least, new wharehouse facilities will be constructed for food handling or processing, and that mariculture facilities will be fabricated and installed. For these activities, at least 20 man years of labor will be developed.

These estimates are based on the near-term utilization of OTEC cold water without major industrial expansion. However, if OTEC power

and OTEC cold water were to attract major new industrial additions, particularly for aluminum processing or ammonia manufacture, the employment effects would be enormous. It is difficult to estimate the full extent of this employment impact, it can be so extensive. However a conservatively low estimate is that if either one of these new industries were to be established in Guam, at least 200 direct new jobs would be generated, and another 400 supporting new jobs. The employment impact would be even greater when the multiplying effects on the local economy are taken into account. Using estimates for the multiplier effects of new job creation in an area such as Guam, over 1000 additional job-equivalent employment activities would result from a single unit of industrial expansion. These additional jobs would be in the service areas, more port-associated labor, and in commerce which supplies good and services for the new industry.

encroachment on possible future expansion of the port, if the area were well to the south of Drydock Peninsula inside Sasa Bay. There is the possibility that the nutrient rich water, after passing through the mariculture growth area could further stimulate algae in other parts of Apra Harbor and thus have a negative potential for commercial activities. However, this is a controllable situation, and should not be allowed to become a major problem.

It is more probable that large scale mariculture would take place at locations outside the immediate Apra Harbor area, particularly if the concept of routing the cold water to the refinery area and then southward to the coastline where large mariculture impoundments could be effective. Large scale mariculture could have a considerable impact on the Port of Guam, particularly as it could create a need for food processing, storage and shipment facilities. Indeed, mariculture could be one of the major revenue generators for Guam and make it one of the leading world centers for this commercial activity.

APPENDIX A

COLD WATER DIMENSIONAL REQUIREMENTS

A. INTRODUCTION

This appendix provides data on the required length, diameter, and water flow through piping and on the requirements for heat exchangers for cooling by OTEC cold water.

B. COLD WATER CONDITIONS

The lowest temperature that could be provided by the OTEC system is 41° F. if the cold water were delivered directly from the cold water pipe. If water were used after passing through the OTEC plant, the cold water temperature would range from 45 to 50° F.

C. PIPE SIZE AND FLOW RATES

A nominal pipe size is chosen, and a reasonable flow rate; then any other pipe size, flow rate or temperature gain allowed in the cold water can be used to calculate the BTU's extracted by the cold water, by a simple multiplying factor.

The nominal pipe is:	1 ft.
The nominal flow is:	10 ft./sec
The nominal temperature drop is:	5 F.

Thus the thermal energy absorbed by the nominal set of conditions is:

$$\frac{\pi}{4}(1)^2 FT^2 \times 10\ FT/SEC \times 5^\circ F \times 64\ LB/FT^3 \times 1\ BTU/LB^\circ F =$$

$$\underline{628}\ BTU/SEC = 54.3 \times 10^6\ BTU/DAY$$

$$\approx \underline{\underline{188}}.$$ tons refrigeration.

D. NOMINAL COOLING REQUIREMENTS

For the volume of a standard seavan, approximately 1 ton of refrigeration is required to maintain its interior at approximately 45 to 50 F. in Guam.

The flow through the nominal pipeline will maintain a warehouse of approximate 200 x 200 ft. dimensions at a comparable temperature.

APPENDIX B

COLD WATER UTILIZATION ENERGY AND COST SAVINGS

A. INTRODUCTION

This appendix provides data on the savings in electric energy and costs resulting from the utilization of cold OTEC water for space cooling and refrigeration.

B. ENERGY REQUIREMENTS FOR REFRIGERATION

Each ton of refrigeration requires 12,000 BTU/hr energy transfer, or 3.52 kilowatts of power transfer each hour of operation. Assuming a conversion efficiency of 33%, approximately 10 kW of electric power is required per ton.

C. COST SAVINGS FROM PIPED COLD WATER

For 188 tons of refrigeration, the consumption of 1880 kWh per hour at a price of $0.12/kWh requires an hourly expenditure of $22.56 per hour, or $541 per day, or $197,000 per year.

BIBLIOGRAPHY

1. Westinghouse Electric Corporation, July 1980. A Study to Determine the Commercialization Potential of Open Cycle OTEC Water Plants. Prepared for U.S. Department of Commerce, Maritime Administration, Office of Commercial Development.

2. Francis, E. J., December 1977. Investment in Commercial Development of Ocean Thermal Energy Conversion (OTEC) Plant-Ships. Prepared for U. S. Department of Commerce, Maritime Administration, Office of Commercial Development.

3. Evans, D. J. and McDonald, K. R., September 1979. OTEC Environmental Package - A Semi-Annual Updated Report. Prepared for U. S. Department of Energy.

4. CHAO-HSIN WEI, BIN-JUINE HUANG and MING-SHENG KONG, January 1980. Engineering Analysis of Pumping Cold Deep Nutrient-rich Seawater for Mariculture and Nuclear Power Plant Cooling. Reprinted from Proceedings of the National Science Council, VOL 4, No. 2, pp. 133-142, April 1980.

5. Lather, Jay, L., April 1980. Energy Considerations in Guam's Future Political Relations with the United States.

6. Pinckert, Walter, F. & Associates (undated). Guam Ocean Thermal Energy Conversion (OTEC). Prepared for the Guam Society of Professional Engineers.

7. Lassery, Dennis, R., July 1979. Oceanographic Conditions in the Vicinity of Cabras Island and Glass Breakwater for the Potential Development of Ocean Thermal Energy Conversion on Guam, University of Guam Marine Laboratory.

8. Port Authority of Guam, July 1979. Economic and Land-Use Plan for Cabras Island and Surrounding Area.

9. Tokyo Electric Power Services Co., LTD. (TEPSCO) 1977. Proposal for Ocean Thermal Energy Conversion Plant in Guam Island.

10. Princeton Energy & Environmental Research Co., June 1980. OTEC Domestic Social and Economic Impacts. Prepared for U. S. Department of Energy.

11. Burwell, Delbert, N., and Naef, Frederick E. (undated). Mini-OTEC Results. Prepared for the 7th Energy Technology Conference.

12. Government of Guam, Guam Energy Office & Bureau of Planning, June 1980. Planning for the Prevention of Environmental and Recreational Losses Due to Ocean Thermal Energy Conversion Development on Cabras Island, Guam. Prepared for the Coastal Energy Impact Program, National Oceanic and Atmospheric Administration.

13. Dames & Moore, October 1979. Environmental Impact Report Projected OTEC Development for the Territory of Guam. Prepared for Coastal Energy Impact Program, Guam Coastal Management Program, Bureau of Planning.

14. U. S. Department of Energy, May 1980. Ocean Energy Systems Multiyear Program Plan,

NOAA COASTAL SERVICES CENTER LIBRARY
3 6668 14109 4385