2–2–95
Vol. 60 No. 22
Pages 6383–6646

federal register

Thursday
February 2, 1995

Briefings on How To Use the Federal Register
For information on briefings in Washington, DC, and Dallas, TX, see announcement on the inside cover of this issue.

FEDERAL REGISTER Published daily, Monday through Friday, (not published on Saturdays, Sundays, or on official holidays), by the Office of the Federal Register, National Archives and Records Administration, Washington, DC 20408, under the Federal Register Act (49 Stat. 500, as amended; 44 U.S.C. Ch. 15) and the regulations of the Administrative Committee of the Federal Register (1 CFR Ch. I). Distribution is made only by the Superintendent of Documents, U.S. Government Printing Office, Washington, DC 20402.

The **Federal Register** provides a uniform system for making available to the public regulations and legal notices issued by Federal agencies. These include Presidential proclamations and Executive Orders and Federal agency documents having general applicability and legal effect, documents required to be published by act of Congress and other Federal agency documents of public interest. Documents are on file for public inspection in the Office of the Federal Register the day before they are published, unless earlier filing is requested by the issuing agency.

The seal of the National Archives and Records Administration authenticates this issue of the **Federal Register** as the official serial publication established under the Federal Register Act. 44 U.S.C. 1507 provides that the contents of the **Federal Register** shall be judicially noticed.

The **Federal Register** is published in paper, 24x microfiche and as an online database through *GPO Access*, a service of the U.S. Government Printing Office. The online database is updated by 6 a.m. each day the **Federal Register** is published. The database includes both text and graphics from Volume 59, Number 1 (January 2, 1994) forward. It is available on a Wide Area Information Server (WAIS) through the Internet and via asynchronous dial-in. The annual subscription fee for a single workstation is $375. Six-month subscriptions are available for $200 and one month of access can be purchased for $35. Discounts are available for multiple-workstation subscriptions. To subscribe, Internet users should telnet to swais.access.gpo.gov and login as newuser (all lower case); no password is required. Dial-in users should use communications software and modem to call (202) 512–1661 and login as swais (all lower case); no password is required; at the second login prompt, login as newuser (all lower case); no password is required. Follow the instructions on the screen to register for a subscription for the **Federal Register** Online via *GPO Access.* For assistance, contact the *GPO Access* User Support Team by sending Internet e-mail to help@eids05.eids.gpo.gov, or a fax to (202) 512–1262, or by calling (202) 512–1530 between 7 a.m. and 5 p.m. Eastern time, Monday through Friday, except Federal holidays.

The annual subscription price for the **Federal Register** paper edition is $494, or $544 for a combined **Federal Register**, Federal Register Index and List of CFR Sections Affected (LSA) subscription; the microfiche edition of the **Federal Register** including the Federal Register Index and LSA is $433. Six month subscriptions are available for one-half the annual rate. The charge for individual copies in paper form is $8.00 for each issue, or $8.00 for each group of pages as actually bound; or $1.50 for each issue in microfiche form. All prices include regular domestic postage and handling. International customers please add 25% for foreign handling. Remit check or money order, made payable to the Superintendent of Documents, or charge to your GPO Deposit Account, VISA or MasterCard. Mail to: New Orders, Superintendent of Documents, P.O. Box 371954, Pittsburgh, PA 15250–7954.

There are no restrictions on the republication of material appearing in the **Federal Register.**

How To Cite This Publication: Use the volume number and the page number. Example: 60 FR 12345.

SUBSCRIPTIONS AND COPIES

PUBLIC

Subscriptions:

Paper or fiche	**202–512–1800**
Assistance with public subscriptions	**512–1806**

Online:

Telnet swais.access.gpo.gov, login as newuser <enter>, no password <enter>; or use a modem to call (202) 512–1661, login as swais, no password <enter>, at the second login as newuser <enter>, no password <enter>.

Assistance with online subscriptions	**202–512–1530**

Single copies/back copies:

Paper or fiche	**512–1800**
Assistance with public single copies	**512–1803**

FEDERAL AGENCIES

Subscriptions:

Paper or fiche	**523–5243**
Assistance with Federal agency subscriptions	**523–5243**

For other telephone numbers, see the Reader Aids section at the end of this issue.

THE FEDERAL REGISTER

WHAT IT IS AND HOW TO USE IT

FOR: Any person who uses the Federal Register and Code of Federal Regulations.

WHO: The Office of the Federal Register.

WHAT: Free public briefings (approximately 3 hours) to present:

1. The regulatory process, with a focus on the Federal Register system and the public's role in the development of regulations.
2. The relationship between the Federal Register and Code of Federal Regulations.
3. The important elements of typical Federal Register documents.
4. An introduction to the finding aids of the FR/CFR system.

WHY: To provide the public with access to information necessary to research Federal agency regulations which directly affect them. There will be no discussion of specific agency regulations.

WASHINGTON, DC

(TWO BRIEFINGS)

WHEN: February 15 at 9:00 am and 1:30 pm
WHERE: Office of the Federal Register Conference Room, 800 North Capitol Street NW., Washington, DC (3 blocks north of Union Station Metro)
RESERVATIONS: 202–523–4538

DALLAS, TX

WHEN: March 30 at 9:00 am
WHERE: Conference Room 7A23
Earle Cabell Federal Building and Courthouse
1100 Commerce Street
Dallas, TX 75242
RESERVATIONS: 1–800–366–2998

Printed on recycled paper containing 100% post consumer waste

Contents

Federal Register

Vol. 60, No. 22

Thursday, February 2, 1995

Administration on Aging
See Aging Administration

Agency for Health Care Policy and Research
NOTICES
Meetings; advisory committees:
February and March, 6535–6536

Agency for International Development
NOTICES
Senior Executive Service:
Performance Review Board; membership, 6552–6553

Aging Administration
NOTICES
White House Conference on Aging; final agenda, 6598–6600

Agricultural Marketing Service
RULES
Milk marketing orders:
New England et al., 6606–6613
Tennessee Valley, 6396–6397
Peanuts, domestically produced, 6394–6395
Poultry and rabbit products; inspection and grading:
Voluntary poultry grade standards, 6638–6643
Spearmint oil produced in Far West, 6392–6394
PROPOSED RULES
Referendum:
Tobacco auction market consolidation—
Clarkton et al., NC, 6452
Fairmont et al., NC, 6453
Kingstree et al., SC, 6453–6454
Tifton et al., NC, 6452–6453

Agriculture Department
See Agricultural Marketing Service
See Animal and Plant Health Inspection Service
See Forest Service
See Natural Resources Conservation Service
NOTICES
Agency information collection activities under OMB review, 6500

Animal and Plant Health Inspection Service
PROPOSED RULES
Exportation and importation of animals and animal products:
Rinderpest and foot-and-mouth disease; disease status change—
Switzerland, 6454–6456

Antitrust Division
NOTICES
National cooperative research notifications:
Pacific Telesis Electronic Publishing Services, Inc., 6553

Children and Families Administration
NOTICES
Grants and cooperative agreements; availability, etc.:
Developmental disabilities—
Projects of national significance, 6533–6535

Commerce Department
See International Trade Administration
See National Oceanic and Atmospheric Administration

Congressional Budget Office
NOTICES
Balanced Budget and Emergency Deficit Control Reaffirmation Act (Gramm-Rudman-Hollings):
Sequestration preview report for 1996 FY transmittal to Congress and OMB, 6646

Corporation for National and Community Service
NOTICES
Grants and cooperative agreements; availability, etc.:
Learn and Serve America: Higher Education programs, 6525–6526

Customs Service
PROPOSED RULES
Country of origin marking:
Frozen produce packages, 6464–6466

Defense Department
PROPOSED RULES
Federal Acquisition Regulation (FAR):
Subcontractor payments, 6602–6604
NOTICES
Federal Acquisition Regulation (FAR):
Agency information collection activities under OMB review, 6526–6527
Meetings:
Scientific Advisory Board, 6527

Employment and Training Administration
NOTICES
Grants and cooperative agreements; availability, etc.:
Job Training Partnership Act—
Title IV training and employment program for people with disabilities, 6555–6564

Energy Department
See Federal Energy Regulatory Commission

Environmental Protection Agency
RULES
Air quality implementation plans; approval and promulgation; various States:
California, 6401–6403
PROPOSED RULES
Air quality implementation plans; approval and promulgation; various States:
California, 6467–6470

Executive Office of the President
NOTICES
Meetings:
Personal Motor Vehicle Greenhouse Gas Reductions Advisory Committee, 6531

Federal Aviation Administration
RULES
Airworthiness directives:
Jetstream Aircraft Ltd., 6397–6398

Airworthiness standards:
Transport category airplanes—
Cabin interior materials; improved flammability standards, 6616–6629
Standard instrument approach procedures, 6398–6399
PROPOSED RULES
Airworthiness directives:
Twin Commander Aircraft Corp., 6459–6461
Airworthiness standards:
Special conditions—
Saab model 2000 airplane, 6456–6459
Transport category airplanes—
Fuel system vent fire protection, 6632–6635
Class E airspace, 6461–6462
VOR Federal airways, 6462–6463
NOTICES
Meetings:
Aviation Rulemaking Advisory Committee, 6585–6586
Passenger facility charges; applications, etc.:
McCarran International Airport, NV, 6586–6587
Robert Mueller Airport, TX, 6587

Federal Communications Commission
PROPOSED RULES
ITU World Radiocommunication Conference, 1993; termination, 6482–6483
Television and radio broadcast services:
Multiple ownership; review, 6483–6490
Television broadcasting:
Ownership rules, 6490–6499

Federal Election Commission
NOTICES
Meetings; Sunshine Act, 6594

Federal Emergency Management Agency
RULES
Flood elevation determinations:
Arkansas et al., 6404–6407
California et al., 6403–6404, 6407–6411
PROPOSED RULES
Flood elevation determinations:
Arizona et al., 6470–6482

Federal Energy Regulatory Commission
NOTICES
Electric rate and corporate regulation filings:
Public Utilities Board of McPherson et al., 6527–6528
Environmental statements; availability, etc.:
Niagara Mohawk Power Corp., 6529–6530
Applications, hearings, determinations, etc.:
EcoElectrica, L.P., 6528–6529
Koch Gateway Pipeline Co., 6529
McDaniel, Burton, M.D., et al., 6529
Northern Natural Gas Co., 6530–6531

Federal Highway Administration
NOTICES
Truck size and weight study, 6587–6589

Federal Maritime Commission
PROPOSED RULES
Maritime carriers in foreign commerce:
Agreements among ocean common carriers; information form and post-effective reporting requirements, 6482
NOTICES
Agreements filed, etc., 6531
Freight forwarder licenses:
Isaca Cargo International, Inc., et al., 6531–6532
Synergy Logistics Services et al., 6532

Federal Reserve System
NOTICES
Applications, hearings, determinations, etc.:
Higgins, John P.M., 6532

Federal Trade Commission
PROPOSED RULES
Rules and guides; solicitation of comments, 6463–6464
NOTICES
Prohibited trade practices:
Creative Aerosol Corp., 6532
RN Nutrition et al., 6533

Fish and Wildlife Service
PROPOSED RULES
Rulemaking petition; Alaska public lands, Federal subsistence management program, 6466–6467
NOTICES
Endangered and threatened species permit applications, 6550–6551
Meetings:
Klamath River Basin Fisheries Task Force, 6551

Food and Drug Administration
NOTICES
Meetings:
Advisory committees, panels, etc., 6536–6537

Forest Service
PROPOSED RULES
Rulemaking petition; Alaska public lands, Federal subsistence management program, 6466–6467
NOTICES
Environmental statements; availability, etc.:
Lassen National Forest, CA, 6502–6503
Snoqualmie Pass Adaptive Management Plan et al., 6501–6502

General Services Administration
PROPOSED RULES
Federal Acquisition Regulation (FAR):
Subcontractor payments, 6602–6604
NOTICES
Federal Acquisition Regulation (FAR):
Agency information collection activities under OMB review, 6526–6527

Government Ethics Office
RULES
Conflict of interests, 6390–6391

Health and Human Services Department
See Agency for Health Care Policy and Research
See Aging Administration
See Children and Families Administration
See Food and Drug Administration
See Health Care Financing Administration
See Health Resources and Services Administration
See National Institutes of Health

Health Care Financing Administration
NOTICES
Medicare:
Lung and heart-lung transplantations; criteria for coverage, 6537–6547

Health Resources and Services Administration
NOTICES
Advisory committees; annual reports; availability, 6548

Housing and Urban Development Department
RULES
Public and Indian housing:
Omaha, NE; homeownership demonstration program
Correction, 6399–6400
NOTICES
Public and Indian housing:
Drug elimination program, 6548–6549

Interior Department
See Fish and Wildlife Service
See Land Management Bureau
See National Park Service
See Reclamation Bureau
See Surface Mining Reclamation and Enforcement Office
NOTICES
Kerr Hydroelectric Project, MT; operating license; environmental protection conditions, 6549–6550

International Development Cooperation Agency
See Agency for International Development

International Trade Administration
NOTICES
Antidumping:
Oil country tubular goods from—
Argentina, 6503–6506
Austria, 6512–6515
Italy, 6515–6516
Japan, 6506–6507
Korea, 6507–6510
Mexico, 6510–6512
Spain, 6516–6519
Tapered roller bearings and parts, finished and unfinished, from—
Japan, 6519–6523
Antidumping and countervailing duties:
Administrative review requests, 6524
Meetings:
President's Export Council, 6523

Justice Department
See Antitrust Division
See Juvenile Justice and Delinquency Prevention Office

Juvenile Justice and Delinquency Prevention Office
NOTICES
Grants and cooperative agreements; availability, etc.:
Challenge grants program; guidelines, 6553–6555

Labor Department
See Employment and Training Administration
NOTICES
Meetings:
Trade Negotiations and Trade Policy Labor Advisory Committee, 6555
North American Agreement on Labor Cooperation; submission acceptance for review:
International Labor Rights Education and Research Fund et al.; partial withdrawal, 6555

Land Management Bureau
NOTICES
Realty actions; sales, leases, etc.:
Nevada, 6551

National Aeronautics and Space Administration
PROPOSED RULES
Federal Acquisition Regulation (FAR):
Subcontractor payments, 6602–6604
NOTICES
Federal Acquisition Regulation (FAR):
Agency information collection activities under OMB review, 6526–6527
Meetings:
Space Science Advisory Committee, 6565
Patent licenses; non-exclusive, exclusive, or partially exclusive:
Imitec, Inc., 6565
Rochester Gas & Electric Corp., 6565

National Highway Traffic Safety Administration
RULES
Motor vehicle safety standards:
Passenger car brake systems—
Hydraulic brake systems, 6411–6446

National Institutes of Health
NOTICES
Meetings:
Research Grants Division special emphasis panels, 6547–6548

National Oceanic and Atmospheric Administration
RULES
Fishery conservation and management:
Limited access management of Federal fisheries in and off of Alaska, 6448–6451
Northeast multispecies, 6446–6448
NOTICES
Coastal zone management programs and estuarine sanctuaries:
State programs—
Evaluation findings availability, 6524–6525

National Park Service
NOTICES
Native American human remains and associated funerary objects:
Museum of New Mexico, NM; prayer stick, 6552

National Science Foundation
NOTICES
Meetings:
Advanced Scientific Computing Special Emphasis Panel, 6566
Biological Sciences Special Emphasis Panel, 6566
Electrical and Communications Systems Special Emphasis Panel, 6566
Human Resource Development Special Emphasis Panel, 6566
Mathematical Sciences Special Emphasis Panel, 6566
Systemic Reform Special Emphasis Panel, 6567

Natural Resources Conservation Service
NOTICES
Environmental statements; availability, etc.:
Nahunta Swamp Watershed, NC, 6500–6501

Nuclear Regulatory Commission
NOTICES
Agency information collection activities under OMB review, 6567
Environmental statements; availability, etc.:
Carolina Power & Light Co., 6567–6568

Entergy Operations, Inc., 6568–6569
Operating licenses, amendments; no significant hazards considerations; biweekly notices; correction, 6569
Petitions; Director's decisions:
US Ecology, Inc., 6570–6574
Applications, hearings, determinations, etc.:
Connecticut Yankee Atomic Power Co., 6574–6575

Personnel Management Office
RULES
Employment:
Executive positions, 6383–6390
Staffing provisions supporting sunset; Federal Personnel Manual
Correction, 6595
PROPOSED RULES
Performance management and incentive awards; deregulation
Correction, 6595

Public Health Service
See Agency for Health Care Policy and Research
See Food and Drug Administration
See Health Resources and Services Administration
See National Institutes of Health

Reclamation Bureau
NOTICES
Environmental statements; availability, etc.:
Narrows Project, UT, 6551–6552

Securities and Exchange Commission
NOTICES
Self-regulatory organizations; proposed rule changes:
Chicago Board Options Exchange, Inc., 6575–6579
Chicago Board Options Exchange, Inc.; correction, 6595
Government Securities Clearing Corp., 6579–6582, 6584–6585
National Association of Securities Dealers, Inc., 6582–6583
Options Clearing Corp., 6583–6584

Small Business Administration
NOTICES
Applications, hearings, determinations, etc.:
RFE Investment Partners V, L.P., 6585

Special Counsel Office
NOTICES
Organization, functions, and authority delegations:
California Field Office; relocation Oakland and renaming as San Francisco Bay Area Field Office, 6585

Surface Mining Reclamation and Enforcement Office
RULES
Permanent program and abandoned mine land reclamation plan submissions:
Indiana, 6400–6401

Transportation Department
See Federal Aviation Administration
See Federal Highway Administration
See National Highway Traffic Safety Administration

Treasury Department
See Customs Service
NOTICES
Agency information collection activities under OMB review, 6589–6591

United States Information Agency
NOTICES
Art objects; importation for exhibition:
Imperial Tombs of China, 6591
Grants and cooperative agreements; availability, etc.:
North African, Middle Eastern, and South Asian foreign language training, area studies and research, 6591–6593

Separate Parts In This Issue

Part II
Department of Health and Human Services, Administration on Aging, 6598–6600

Part III
Department of Defense, General Services Administration, and National Aeronautics and Space Administration, 6602–6604

Part IV
Department of Agriculture, Agricultural Marketing Service, 6606–6613

Part V
Department of Transportation, Federal Aviation Administration, 6616–6629

Part VI
Department of Transportation, Federal Aviation Administration, 6632–6635

Part VII
Department of Agriculture, Agricultural Marketing Service, 6638–6643

Part VIII
Congressional Budget Office, 6646

Reader Aids
Additional information, including a list of public laws, telephone numbers, and finding aids, appears in the Reader Aids section at the end of this issue.

Electronic Bulletin Board
Free **Electronic Bulletin Board** service for Public Law numbers, **Federal Register** finding aids, and a list of documents on public inspection is available on 202–275–1538 or 275–0920.

CFR PARTS AFFECTED IN THIS ISSUE

A cumulative list of the parts affected this month can be found in the Reader Aids section at the end of this issue.

5 CFR
211 6595
214 6383
317 6383
319 6383
353 6595
359 6383
430 6595
534 6383
2635 6390

7 CFR
70 6638
985 6392
997 6394
1001 6606
1002 6606
1004 6606
1005 6606
1006 6606
1007 6606
1011 (2 documents) 6396, 6606
1012 6606
1013 6606
1030 6606
1032 6606
1033 6606
1036 6606
1040 6606
1044 6606
1046 6606
1049 6606
1050 6606
1064 6606
1065 6606
1068 6606
1075 6606
1076 6606
1079 6606
1093 6606
1094 6606
1096 6606
1106 6606
1108 6606
1124 6606
1126 6606
1131 6606
1134 6606
1135 6606
1137 6606
1138 6606
1139 6606

Proposed Rules:
29 (4 documents) 6452, 6453

9 CFR

Proposed Rules:
94 6454

14 CFR
25 6616
39 6397
97 6398
121 6616
135 6616

Proposed Rules:
25 (2 documents) 6456, 6632
39 6459
71 (2 documents) 6461, 6462
121 6632
125 6632
135 6632

16 CFR

Proposed Rules:
Ch. 1 6463

19 CFR

Proposed Rules:
134 6464

24 CFR
907 6399

30 CFR
914 6400

36 CFR

Proposed Rules:
242 6466

40 CFR
52 6401

Proposed Rules:
52 6467

44 CFR
65 (2 documents) 6403, 6404
67 6407

Proposed Rules:
67 6470

46 CFR

Proposed Rules:
572 6482

47 CFR

Proposed Rules:
Ch. 1 6482
73 (2 documents) 6483, 6490

48 CFR

Proposed Rules:
28 6602
32 6602
52 6602

49 CFR
571 6411

50 CFR
651 6446
676 6448

Proposed Rules:
100 6466

Rules and Regulations

Federal Register
Vol. 60, No. 22
Thursday, February 2, 1995

This section of the FEDERAL REGISTER contains regulatory documents having general applicability and legal effect, most of which are keyed to and codified in the Code of Federal Regulations, which is published under 50 titles pursuant to 44 U.S.C. 1510.

The Code of Federal Regulations is sold by the Superintendent of Documents. Prices of new books are listed in the first FEDERAL REGISTER issue of each week.

OFFICE OF PERSONNEL MANAGEMENT

5 CFR Parts 214, 317, 319, 359, and 534

RIN 3206–AG14

Executive Positions and Employment

AGENCY: Office of Personnel Management.

ACTION: Final rule.

SUMMARY: The Office of Personnel Management (OPM) is issuing final regulations governing employment procedures for Senior Executive Service, senior-level, and scientific and professional positions as part of the implementation of Federal Personnel Manual (FPM) sunset. The regulations incorporate certain requirements that existed only in the provisionally retained FPM, which was sunset on December 31, 1994.

EFFECTIVE DATE: February 2, 1995.

FOR FURTHER INFORMATION CONTACT: Neal Harwood at 202–606–2826.

SUPPLEMENTARY INFORMATION: On October 18, 1994, OPM issued proposed regulations [59 FR 52459] affecting Senior Executive Service (SES), senior-level (SL), and scientific and professional (ST) positions and employment. The proposed regulations continued (in some cases in modified form) certain requirements and authorities that would go out of existence when the provisionally retained FPM was sunset on December 31, 1994, because they were not specified in other regulations or statute. The proposed regulations also clarified certain existing regulatory provisions and deleted out-of-date provisions.

The comment period, which was 60 days from the date of publication, ended on December 19, 1994. Written comments were received from seven agencies and the Senior Executives Association (SEA).

Before reviewing the comments on specific provisions, we want to note that three agencies and SEA included comments supporting the regulations in general. One agency wanted to substantially reduce what was included in the regulations. SEA, on the other hand, in its comments on specific provisions recommended in a number of places that the regulations be made more restrictive.

As we stated in the proposed regulations, we have tried to take into account the recommendations in the Report of the National Performance Review to allow agencies more flexibility in managing their personnel system, while maintaining a ''corporate approach to managing executive resources.'' Under such an approach, there are some basic features of executive personnel systems that need to be administered uniformly on a Governmentwide basis.

We have tried to hold these requirements to a minimum; but as we said in the proposed regulations ''a basic regulatory framework (including certain procedural requirements) is necessary to assure an executive personnel system that meets statutory requirements and carries out merit system principles.''

We recognize that different parties will have different views as to what are the basic requirements that need to be maintained. We believe the regulations provide an appropriate balance between agency flexibility and Governmentwide requirements. (As we pointed out in the proposed regulations, no requirements are imposed on agencies under the regulations that did not exist in the former FPM; and a number have been deleted or modified.) We will continue, however, to see how these requirements work in practice and will make necessary modifications in the future if there are problems that arise.

Part 317—Employment in the Senior Executive Service

(1) Section 317.501, Recruitment and Selection for Initial SES Career Appointment

Paragraph (b)(2) requires that vacancies must be included in an OPM listing of SES vacancies for at least 14 calendar days. One agency recommended that agencies be allowed to use a shorter period if they had a legitimate reason, and another agency recommended not having any minimum period. We believe the 14-day notice period is needed to assure full and open competition and does not place an undue delay on any agency in filling its positions.

Subsequent to publication of the regulations a question arose whether the reannouncement of an SES vacancy after the original announcement has closed must also be included in OPM's listing for at least an additional 14 days. The regulations apply to all announcements, including reannouncements.

(2) Section 317.502. Qualifications Review Board (QRB) Certification

Paragraph (b) is revised to eliminate time limits on the submission of QRB cases. Currently, cases must be received by OPM within 9 months from the closing date of the vacancy announcement. The proposed regulations would have extended the deadline to 12 months. Elimination of the deadline for the submission of QRB cases responds to agency requests for more flexibility to make decisions on executive selections. Although OPM will not prescribe a deadline, we expect that most QRB cases will be submitted within 9 months of the closing date of the vacancy announcement. Agencies may, of course, establish internal deadlines to facilitate timely processing of QRB cases.

Paragraph (d) clarifies OPM's authority regarding the disposition of QRB cases when an agency head has changed or will be changing, or when there is a Presidential transition. One agency felt that a moratorium on QRB actions should not apply to it because of its national security functions and because the Deputy by law exercises the full powers of the agency head in the absence of the Secretary. The regulatory provision give OPM authority to hold or return QRB cases, but does not require such action. Particular situations can be addressed with the agency involved depending on the circumstances.

Paragraph (e) states that OPM will not submit to a QRB the conversion of a noncareer SES employee to a career SES appointment in the employee's own position or a successor to that position. One agency wanted to broaden the restriction to cover substantially similar positions. Another agency recommended eliminating the provision on the basis that it is a disenfranchising of the right to apply and be selected for

a position. The restriction is in the regulation because in this situation there is no genuine vacancy for which to compete since the position is currently occupied. Therefore, we do not believe it appropriate to extend the restriction to other positions that are vacant, even though they may be similar, or to eliminate the restriction.

(3) Section 317.601, Limited Appointments

The section provides a pool of limited appointment authorities equal to 2 percent of an agency's SES position allocation (with a minimum of one authority for each agency) that agencies can use without getting prior OPM approval as long as the appointee is currently a career or career-type appointee outside the SES.

Two agencies wanted to use the pool to make appointments from outside the Government. We have restricted the pool to career and career-type appointees to assure that it is used appropriately and not for noncareer or political-type appointments. As we noted in the proposed regulations, where appropriate OPM could still give an agency a separate quota for use in making limited appointments on its own under specified circumstances, e.g., to make appointments to scientific positions where there was a critical or emergency need.

(4) Section 317.901, Reassignments

Paragraph (d) states the authority of agencies to run 15-day (nongeographic) and 60-day (geographic) advance notices on reassignments of career SES appointees concurrently with the 120-day moratorium on involuntary reassignments following the appointment of a new agency head or noncareer supervisor (5 U.S.C. 3395(e)).

SEA stated that under 5 U.S.C. 3395(e) advance notices should not be issued until after the 120 days have expired. SEA argued that the intent of the law is to assure that the noncareer supervisor has at least 120 days to observe the performance of the career appointee before making a reassignment decision. We noted in the proposed regulations that if the notice could not be issued until after the moratorium, the moratorium in effect would be extended by the length of the notice period. SEA stated that the agency could detail the employee immediately after the moratorium expired until the notice period was over. That still extends by up to 60 days, however, the time before an official reassignment could be made.

Allowing the advance notice to run during the moratorium is not new. The authority had been explicitly stated in the former FPM since 1989. We see no conflict with the statutory provision on moratoriums, which governs when the reassignment can be effected. We want to note that agencies are still free to wait until after the moratorium to issue the advance notice, or to cancel a proposed reassignment before it is effected if the notice is issued during the moratorium.

(5) *Section 317.903, Details*

Paragraph (b) modifies time limits on details that previously existed in the FPM in order to reduce paperwork, provide greater flexibility for the SES as a separate service, and protect the rights of employees.

One agency recommended eliminating all regulations on the duration of details. SEA, on the other hand, recommended retaining the current provisions.

SEA argued as follows. Allowing details of SES members to unclassified duties for up to 240 days (in lieu of the current 120 days) would permit political appointees to place career SES appointees ''on the shelf'' for the prolonged periods. Allowing non-SES employees to be detailed to the SES noncompetitively for up to 240 days (in lieu of the current 120 days) violates the concept of equal pay for equal work. Requiring OPM approval of the details of non-SES employees to the SES only if the detail exceeds 240 days (in lieu of the current 120 days) and only if the person on detail supervises other SES employees (in lieu of also including nonsupervisory details) will encourage agencies to use details, which involve no adjustment in pay, rather than limited SES appointments for temporary assignments.

We understand SEA's concerns. Details, however, are a legitimate method of temporarily staffing a position. Providing additional flexibility in personnel operations, one of the stated goals of the National Performance Review, does not automatically mean that agencies will abuse their increased authority. We believe these provisions still adequately protect employee rights. As we noted in the proposed regulations, we believe changes we have made in the regulations on limited SES appointments will in fact lead to greater use of those appointments in lieu of details.

Part 319—Employment in Senior-Level and Scientific and Professional Positions

(1) *Subpart D, Recruitment and Examination*

The subpart delegates authority to agencies to recruit and examine applicants and establish civil service registers for SL positions in the competitive service in accordance with criteria prescribed in the regulations. The criteria implement provisions in statute (5 U.S.C. chapter 33, subchapter I) and elsewhere in the regulations for examination, certification, and selection of individuals who do not have status in the competitive service.

One agency said that all the procedures should be issued as guidance rather than incorporated in the regulations. Under 5 U.S.C. 1104, however, OPM is required to establish standards which shall apply to the activities of any agency under delegated authority.

Two agencies specifically recommended that the requirement to use a numerical rating scale of 100 points with 70 as passing in establishing a civil service register for competitive appointment be deleted. They said agencies should have the freedom to use any examining method they deem appropriate, provided all legal requirements are met.

The procedures in the regulations for staffing senior-level positions are based on existing statutory and regulatory provisions that govern the selection of non-status persons for competitive service positions. OPM is considering a number of proposed statutory and regulatory changes in the competitive examining system to make it less prescriptive in light of the National Performance Review recommendations on Federal staffing. One of the proposed changes would authorize agencies to examine for jobs using either the existing system of ranking candidates based on numerical ratings or a new method of placing candidates in quality groups based on qualifications (veterans would receive preference within quality groups). Under current law, numerical rating and ranking is required for competitive examining.

In order to simplify the regulations, however, we have deleted from subpart D the specific provisions in the proposed regulations covering establishment of a roster of eligibles, selection, and applicant rights. These provisions are covered elsewhere in 5 CFR where competitive examining for the civil service in general is discussed (e.g., section 337.101 on using a numerical rating scale of 100, section 332.404 on selecting from the highest three eligible on a certificate and section 300.104 on handling applicant complaints.)

Part 359—Removal From the SES; Guaranteed Placement in Other Personnel Systems

(1) *Subpart F, Reduction in Force*

Sections 359.603(a)(1) and (d)(2) are revised to permit the agency head to delegate to an official at the Assistant

Secretary level or above in departments, or an equivalent official above the director of personnel in other agencies, the authority to certify to OPM that the agency does not have a vacant SES position for a RIF'd employee or that a RIF'd employee referred by OPM is not qualified for the referred position. Current regulations do not permit any delegation.

SEA commented that since the law states that the ''agency head'' shall make these determinations, there is no authority under the law for any delegation. There is general authority in title 5 of the U.S. Code, however, for agency heads to delegate personnel authorities. Under 5 U.S.C. 302(b), ''the head of an agency may delegate to subordinate officials the authority vested in him—(1) by law to take final action on matters pertaining to the employment, direction, and general administration of personnel under his agency * * *.'' Delegation would be prohibited only if a law governing a particular authority specifically stated that the authority could not be delegated, or if OPM in exercising its regulatory authority under a law stated there could be no delegation.

SEA also wanted to have the agency head make the determinations because it believed that an official at the Assistant Secretary level would be subject to peer pressures that could preclude a correct determination. Individuals at the Assistant Secretary level make many decisions that affect managers throughout the agency (such as those affecting budget and personnel), and we believe these officials will be able to act in an impartial manner and protect employee rights, absent any facts to the contrary.

Waiver of Delay in Effective Date

I find that good cause exists for making this rule effective on February 2, 1995. The delay in the effective date of this rule is being waived since the requirements established in the rule are not new. They previously were contained in the provisionally retained Federal Personnel Manual, which sunset on December 31, 1994. The regulations need to be made effective immediately to avoid any significant break in the application of the affected requirements.

Regulatory Flexibility Act

I certify that this regulation will not have a significant economic impact on a substantial number of small entities because it will only affect Federal Government employees who are in executive positions.

List of Subjects

5 CFR Parts 214, 317, 319, and 359

Government employees.

5 CFR Part 534

Government employees, hospitals, students, wages.

U.S. Office of Personnel Management.

James B. King,

Director.

Accordingly, OPM is amending 5 CFR parts 214, 317, 319, 359, and 534 as follows:

PART 214—SENIOR EXECUTIVE SERVICE

1. The authority citation for part 214 continues to read as follows:

Authority: 5 U.S.C. 3132.

2. In subpart B, § 214.203 and § 214.204 are added to read as follows:

Subpart B—General Provisions

§ 214.203 Reporting requirements.

Agencies shall report such information as may be requested by OPM relating to positions and employees in the Senior Executive Service.

§ 214.204 Interchange agreements.

(a) In accordance with 5 CFR 6.7, OPM and any agency with an executive personnel system essentially equivalent to the Senior Executive Service (SES) may, pursuant to legislative and regulatory authorities, enter into an agreement providing for the movement of persons between the SES and the other system. The agreement shall define the status and tenure that the persons affected shall acquire upon the movement.

(b) Persons eligible for movement must be serving in permanent, continuing positions with career or career-type appointments. They must meet the qualifications requirements of any position to which moved.

(c) An interchange agreement may be discontinued by either party under such conditions as provided in the agreement.

PART 317—EMPLOYMENT IN THE SENIOR EXECUTIVE SERVICE

3. The authority citation for part 317 continues to read as follows:

Authority: 5 U.S.C. 3392, 3393, 3393a, 3395, 3397, 3593, and 3595.

4. In subpart C, § 317.301 is amended by redesignating paragraph (a)(4) as paragraph (a)(5) and by adding a new paragraph (a)(4) to read as follows:

Subpart C—Conversion to the Senior Executive Service

§ 317.301 Conversion coverage.

(a) * * *

(4) The implementation of the SES in a formerly excluded agency when OPM determines that the agency is an ''Executive agency'' under 5 U.S.C. 3132(a)(1).

* * * * *

5. In subpart D, the current paragraph in § 317.401 is designated as paragraph (a), and paragraph (b) is added to read as follows:

Subpart D—Qualifications Standards

§ 317.401 General.

* * * * *

(b) A written qualification standard must be established for a position before any appointment is made to the position. If a position is being filled competitively, the standard must be established before the position is announced.

6. In subpart E, § 317.501 is amended by revising the last sentence of paragraph (a), revising paragraph (b)(2), and by adding paragraph (f) to read as follows:

Subpart E—Career Appointments

§ 317.501 Recruitment and selection for initial SES career appointment.

(a) * * * The ERB shall, in accordance with the requirements of this section, conduct the merit staffing process for initial SES career appointment.

(b) * * *

(2) Announcements of SES vacancies to be filled by initial career appointment must be included in the OPM SES vacancy announcement system for at least 14 calendar days, including the date of publication.

* * * * *

(f) *OPM review.* OPM may review proposed career appointments to ensure that they comply with all merit staffing requirements and are free of any impropriety. An agency shall take such action as OPM may require to correct an action contrary to any law, rule, or regulation.

7. Section 317.502 is amended by removing the last sentence of paragraph (b), revising paragraph (d), redesignating paragraph (e) as paragraph (f), and by adding a new paragraph (e) to read as follows:

§ 317.502 Qualifications Review Board certification.

* * * * *

(d) OPM may determine the disposition of agency QRB requests

where the QRB has not yet acted if the agency head leaves office or announces an intention to leave office, if the President has nominated a new agency head, or if there is a Presidential transition.

(e) OPM will not submit to a QRB any action to convert a noncareer SES employee to a career SES appointment in the employee's current position or a successor to that position.

* * * * *

8. Section 317.503 is amended by removing the last sentence in paragraph (b), redesignating paragraphs (c) and (d) as paragraphs (d) and (e) respectively, and adding a new paragraph (c) and paragraph (f) to read as follows:

§ 317.503 Probationary period.

* * * * *

(c) The following conditions apply to crediting service towards completion of the probationary period.

(1) Time on leave with pay while in an SES position is credited. Earned leave for which the employee is compensated by lump-sum payment upon separation is not credited.

(2) Time in a nonpay status while in an SES position is credited up to a total of 30 calendar days (or 22 workdays). After 30 calendar days, the probationary period is extended by adding to it time equal to that served in a nonpay status.

(3) Time absent on military duty or due to compensable injury is credited upon restoration to the SES when no other break in SES service has occurred.

(4) Time following transfer to an SES position in another agency is credited, i.e., the individual does not have to start a new probationary period.

* * * * *

(f) An individual who separated from the SES during the probationary period and who has been out of the SES more than 30 calendar days must serve a new 1-year probationary period upon reappointment and may not credit previous time in a probationary period. In the following situations, however, there is an exception and the individual is only required to complete the remainder of the previously served probationary period.

(1) The individual left the SES without a break in service for a Presidential appointment and is exercising reinstatement rights under 5 U.S.C. 3593(b).

(2) The individual left the SES without a break in service for other civilian employment that provides a statutory or regulatory reemployment right to the SES when no other break in service occurred.

(3) The break in SES service was the result of military duty or compensable injury, and the time credited under paragraph (c)(3) of this section was not sufficient to complete the probationary period.

9. In subpart F, the heading for the subpart is revised to read as follows:

Subpart F—Noncareer and Limited Appointments

10. Section 317.601 is revised to read as follows:

§ 317.601 Authorization.

(a) An agency may make a noncareer or limited appointment only to a general position.

(b) Each use of a noncareer appointment authority must be approved individually by the Office of Personnel Management, and the authority reverts to the Office upon departure of the incumbent, unless otherwise provided by the Office.

(c) Use of a limited appointment authority is subject to the conditions in this paragraph.

(1) Agencies are provided a pool of limited appointment authorities equal to 2 percent of their Senior Executive Service (SES) position allocation, or one authority, whichever is greater. An agency may use the pool to make a limited appointment only of an individual who has a career or career-conditional appointment (or an appointment of equivalent tenure) in a permanent civil service position outside the SES. If necessary, the Office of Personnel Management may suspend use of the pool authority.

(2) Each use of a limited appointment authority other than under paragraph (c)(1) of this section must be approved individually by the Office, and the authority reverts to the Office upon departure of the incumbent, unless otherwise provided by the Office.

11. Section 317.602 is amended by revising the heading and removing the first sentence in paragraph (a) to read as follows:

§ 317.602 Conditions of a limited appointment.

* * * * *

12. Section 317.603 is amended by revising the heading and the first sentence to read as follows:

§ 317.603 Selection.

An agency may make a noncareer or limited appointment without the use of merit staffing procedures. * * *

13. Section 317.604 is amended by revising the heading, redesignating paragraphs (a) and (b) as paragraphs (b)(1) and (b)(2) respectively, designating the introductory text of the section as the introductory text of paragraph (b), and by adding a new paragraph (a) to read as follows:

§ 317.604 Reassignment.

(a) An agency may reassign a noncareer appointee only with the prior approval of the Office unless otherwise provided by the Office.

* * * * *

14. Section 317.605 is amended by revising paragraphs (a) and (b) to read as follows:

§ 317.605 Tenure of appointees.

(a) A noncareer or limited appointee does not acquire status within the Senior Executive Service on the basis of the appointment.

(b) An agency may terminate a noncareer or limited appointment at any time, unless a limited appointee is covered under 5 CFR 752.601(c)(2). The agency must give the noncareer or limited appointee a written notice at least 1 day prior to the effective date of the removal.

* * * * *

15. In subpart G, § 317.703 is amended by designating the text of paragraph (a) as paragraph (a)(1) and adding a new paragraph (a)(2) to read as follows:

Subpart G—SES Career Appointment by Reinstatement

§ 317.703 Guaranteed reinstatement: Presidential appointees.

(a) * * *

(2) If an individual is serving under a Presidential appointment with reinstatement entitlement and receives another Presidential appointment without a break in service between the two appointments, the individual continues to be entitled to be reinstated to the SES following termination of the second appointment. If there is an interim period between the two Presidential appointments, the individual must be reinstated as an SES career appointee before the effective date of the second appointment to preserve reinstatement entitlement following termination of the second appointment.

* * * * *

16. In subpart H, § 317.801 is amended by revising the heading for paragraph (b), designating the text of paragraph (b) as paragraph (b)(1), adding paragraphs (b)(2) and (b)(3), and by removing paragraph (d) to read as follows:

Subpart H—Retention of SES Provisions

§ 317.801 Retention of SES Provisions

* * * * *

(b) *Election.* * * *

(2) The appointing agency is responsible for advising the appointee of the election opportunity. The election decision must be in writing.

(3) If an appointee elects to retain SES basic pay, the appointee is entitled to receive locality-based comparability payments under 5 CFR, part 531, subpart F, if such pay is applicable to SES employees in the locality pay area, and any applicable special pay adjustment for a law enforcement officer under 5 CFR part 531, subpart C, even though the appointee may be in an Executive Schedule position otherwise excluded from such payments.

* * * * *

17. In subpart I, § 317.901 is amended by adding paragraph (d) to read as follows:

Subpart I—Reassignments, Transfers, and Details

§ 317.901 Reassignments.

* * * * *

(d) A 15 or 60-day advance notice described in paragraph (b) of this section may be issued during the 120-day moratorium on the involuntary reassignment of a career appointee described in paragraph (c) of this section, but an involuntary reassignment may not be effected until the moratorium has ended.

18. Section 317.903 is amended by revising paragraph (b)(2) and by adding paragraphs (b)(3) and (b)(4) to read as follows:

§ 317.903 Details.

* * * * *

(b) * * *

(2) An agency may not detail an SES employee to unclassified duties for more than 240 days.

(3) An agency must use competitive procedures when detailing a non-SES employee to an SES position for more than 240 days unless the employee is eligible for a noncompetitive career SES appointment.

(4) An agency must obtain OPM approval for a detail of more than 240 days if the detail is of:

(i) a non-SES employee to an SES position that supervises other SES positions; or

(ii) An SES employee to a position at the GS–15 or equivalent level or below.

PART 319—EMPLOYMENT IN SENIOR-LEVEL AND SCIENTIFIC AND PROFESSIONAL POSITIONS

19. Part 319 is revised to read as follows:

Subpart A—General

Sec.
319.101 Coverage.
319.102 Senior-level positions.
319.103 Scientific and professional positions.
319.104 Applicable instructions.
319.105 Reporting requirements.

Subpart B—Position Allocations and Establishment

319.201 Coverage.
319.202 Allocation of positions.
319.203 Establishment of positions.

Subpart C—Qualifications Requirements

319.301 Qualifications standards.
319.302 Individual qualifications.

Subpart D—Recruitment and Examination

319.401 Senior-level positions.
319.402 Scientific and professional positions.

Authority: 5 U.S.C. 1104, 3104, 3324, 3325, 5108, and 5376.

Subpart A—General

§ 319.101 Coverage.

(a) This part covers senior-level (SL) and scientific and professional (ST) positions that are classified above GS–15 and are paid under 5 U.S.C. 5376. See 5 CFR part 534, subpart E, for pay provisions.

(b) Positions that meet the criteria for placement in the Senior Executive Service (SES) under 5 U.S.C. 3132(a) may not be placed in the SL or ST system and are not covered by this part.

§ 319.102 Senior-level positions.

(a) SL positions are positions classified above GS–15 pursuant to 5 U.S.C. 5108 that are not covered by other pay systems (e.g. the SES and ST systems).

(b) Positions in agencies that are excluded from 5 U.S.C. chapter 51 (Classification) under section 5102(a), or positions that meet one of the exclusions in section 5102(c), are excluded from the SL system.

(c) SL positions in the executive branch are in the competitive service unless the position is excepted by statute, Executive order, or the Office of Personnel Management (OPM).

§ 319.103 Scientific and professional positions.

(a) ST positions are established under 5 U.S.C. 3104 to carry out research and development functions that require the services of specially qualified personnel.

(b) Research and development functions are defined in The Guide to Personnel Data Standards under the data element ''Functional Classification.'' The guide is available for inspection at the Office of Personnel Management library, 1900 E Street, NW., Washington DC 20415.

(c) An ST position must be engaged in research and development in the physical, biological, medical, or engineering sciences, or a closely related field.

(d) ST positions are in the competitive service.

§ 319.104 Applicable instructions.

Provisions in statute, Executive order, or regulations that relate in general to competitive and excepted service positions and employment apply to positions and employment under the SL and ST systems unless there is a specific provision to the contrary.

§ 319.105 Reporting requirements.

Agencies shall report such information as may be requested by OPM relating to SL and ST positions and employees.

Subpart B—Position Allocations and Establishment

§ 319.201 Coverage.

This section applies to SL positions in an executive agency per 5 U.S.C. 5108 and ST positions in any agency per 5 U.S.C. 3104.

§ 319.202 Allocation of positions.

SL and ST positions may be established only under a position allocation approved by OPM.

§ 319.203 Establishment of positions.

(a) Prior approval of OPM is not required to establish individual SL and ST positions within an allocation, but the positions must be established in accordance with the standards and procedures in paragraph (b) of this section. OPM reserves the right to require the prior approval of individual positions if the agency is not in compliance with these standards and procedures.

(b) Before an SL or ST position may be established, an agency must:

(1) Prepare a description of the duties, responsibilities, and supervisory relationships of the position; and

(2) Determine, consistent with published position classification standards and guides and accepted classification principles, that the position is properly classified above GS–15. In addition, for an ST position an agency must determine that the position meets the functional research and development criteria described in § 319.103.

Subpart C—Qualifications Requirements

§ 319.301 Qualifications standards.

(a) *General.* Agency heads are responsible for establishing qualifications standards in accordance with the criteria in this section.

(1) The standard must be in writing and identify the breadth and depth of the knowledges, skills, and abilities, or other qualifications, required for successful performance in the position.

(2) Each criterion in the standard must be job related.

(3) The standard may not include any criterion prohibited by law or regulation.

(b) *Standards for senior-level positions.* (1) The standard must be specific enough to enable applicants to be rated and ranked according to their degree of qualifications when the position is being filled on a competitive basis.

(2) The standard may not include a minimum length of experience or minimum education requirement beyond that authorized for similar positions in the General Schedule.

(c) *Standards for scientific and professional positions.* (1) Unless the agency obtains the approval of OPM, the standard must provide that the candidate have at least 3 years of specialized experience in, or closely related to, the field in which the candidate will work. At least 1 year of this experience must have been in planning and executing difficult programs of national significance or planning and executing specialized programs that show outstanding attainments in the field of research or consultation.

(2) Agencies may require that at least 1 year of the specialized experience must be at least equivalent to experience at GS–15.

(3) Agencies may require applicants to furnish positive evidence that they have performed highly creative or outstanding research where similar abilities are required in the ST position.

§ 319.302 Individual qualifications.

Agency heads are delegated authority to approve the qualifications of individuals appointed to SL and ST positions. The agency head must determine that the individual meets the qualifications standards for the position to which appointed.

Subpart D—Recruitment and Examination

§ 319.401 Senior-level positions.

(a) *General.* SL positions may be in either the competitive or excepted service. This section only applies to appointments in the competitive service from a civil service register. Reassignments, promotions, transfers, and reinstatements to SL positions in the competitive service shall be made in accordance with applicable statutory and regulatory provisions. Employment of SL employees in the excepted service is covered by 5 CFR, part 302.

(1) Agency heads are delegated authority to recruit and examine applicants for SL positions in the competitive service, establish competitor inventories, and issue certificates of eligibility in conformance with the requirements of this section, other applicable regulations, and statute.

(2) Agencies shall take such action as OPM may require to correct an action taken under delegated authority.

(3) Delegated authority may be terminated or suspended at any time by OPM for reasons such as, but not limited to:

(i) Evidence of unequal treatment of candidates; or

(ii) Identifiable merit system abuses.

(b) *Recruitment.* (1) A recruiting plan, with appropriate emphasis on affirmative recruitment, must be developed and followed.

(2) Vacancy announcements must remain open for a minimum of 14 calendar days. The closing date may not be a nonworkday.

(3) State Job Service offices must be notified of the vacancy in accordance with 5 CFR 330.102. Publication in OPM's listing of Senior Executive Service and other executive vacancies, which is provided the offices, will satisfy this requirement.

(c) *Evaluation and selection.* Examination and selection procedures, and rights of applicants, are subject to the same provisions in statute and regulation that govern civil service examinations and appointments in general.

(d) *Records.* (1) Agencies must maintain records sufficient to allow reconstruction of the merit staffing process.

(2) Records must be kept for 2 years after an appointment, or, if no appointment is made, for 2 years after the closing date of the vacancy announcement.

§ 319.402 Scientific and professional positions.

(a) ST positions are filled without competitive examination under 5 U.S.C. 3325.

(b) ST positions are not subject to the citizenship requirements in 5 CFR part 338, subpart A. Agencies, however, must observe any restrictions on the employment of noncitizens in applicable appropriations acts.

(c) ST employees acquire competitive status immediately upon appointment. They are not required to serve a probationary or trial period.

PART 359—REMOVAL FROM THE SENIOR EXECUTIVE SERVICE; GUARANTEED PLACEMENT IN OTHER PERSONNEL SYSTEMS

20. The authority citation for part 359 continues to read as follows:

Authority: 5 U.S.C. 1302 and 3596, unless otherwise noted.

21. In subpart F, § 359.601 is amended by adding paragraph (b)(3) to read as follows:

Subpart F—Removal of Career Appointees as a Result of Reduction in Force

§ 359.601 General.

* * * * *

(b) * * *

(3) *Agency* in this subpart means an executive department or an independent establishment.

* * * * *

22. Section 359.602 is amended by adding a sentence at the end of paragraph (a)(2) and by adding a new paragraph (a)(4) to read as follows:

§ 359.602 Agency reductions in force.

(a) * * *

(2) * * * When performance ratings are used, they shall be the final ratings under 5 CFR part 430, subpart C.

* * * * *

(4) Competitive procedures are not required if an agency is being abolished, without a transfer of functions, and all SES appointees will be separated at the same time or within 3 months of abolishment.

23. Section 359.603 is amended by revising the last sentence in paragraph (a)(1), adding a new paragraph (a)(4), revising the last sentence in paragraph (d)(2), adding paragraph (d)(3), and by revising paragraph (f) to read as follows:

§ 359.603 OPM priority placement.

(a) * * *

(1) * * * This certification may not be delegated below the Assistant Secretary level in a department, or an equivalent level above the director of personnel in other agencies.

* * * * *

(4) An individual remains a career SES appointee in his or her agency during the OPM placement period.

* * * * *

(d) * * *

(2) * * * The response may not be delegated below the Assistant Secretary level in a department, or an equivalent level above the director of personnel in other agencies.

(3) If an agency cancels a position while a referral to the position is pending, the appointee will be entitled to priority consideration for the position if it or a successor position is reestablished in the SES within 1 year of the cancellation date and the appointee has not been placed in another SES position.

* * * * *

(f) *Declination by employee.* If a career appointee declines a reasonable offer of placement, OPM's placement efforts will cease. The appointee may be removed from the SES at the expiration of the agency notice period.

24. Section 359.605 is revised to read as follows:

§ 359.605 Notice requirements.

(a) Each career appointee subject to removal under § 359.604(b) is entitled to a specific, written notice at least 45 calendar days before the effective date of the removal. The notice shall state, as a minimum—

(1) The action to be taken and its prospective effective date;

(2) The nature of the competition, including the appointee's competitive area, if less than the agency, and standing on the retention register;

(3) The place where the appointee may inspect the regulations and records pertinent to the action;

(4) Placement rights within the agency and through OPM, including how the employee can apply for OPM placement assistance; and

(5) The appointee's appeal rights, including the time limit for appeal and the location of the Merit Systems Protection Board office to which an appeal should be sent.

(b) A career appointee who has received a notice under paragraph (a) of this section is entitled to a second notice in writing at least 1 day before removal from the SES. The notice shall state, as a minimum—

(1) The basis for the removal, i.e., 5 U.S.C. 3595(b)(5) if the basis is expiration of the 45-day OPM placement period, or 5 U.S.C. 3595(b)(4) if the basis is declination of a reasonable offer of placement, in which case identify the position offered and the date on which it was declined;

(2) The effective date of the removal;

(3) Placement rights outside the SES and, when applicable, the appointee's eligibility for discontinued service retirement in lieu of placement; and

(4) Reminder of the appointee's appeal rights.

25. In subpart G, § 359.705 is amended by redesignating paragraph (b) as paragraph (d), by adding a new paragraph (b), and by adding paragraphs (c), and (e) to read as follows:

Subpart G—Guaranteed Placement

§ 359.705 Pay.

* * * * *

(b) An employee who is placed under this subpart in a position outside the SES in another agency is entitled to receive basic pay under the provisions of this section.

(c) An employee who is placed under this subpart in a General Schedule position is not subject to the limitation on General Schedule basic pay in 5 U.S.C. 5303(f) of level V of the Executive Schedule. The employee is subject, however, to the limitation on General Schedule basic pay plus locality-based comparability payments in 5 U.S.C. 5304(g)(1) of level IV of the Executive Schedule.

* * * * *

(e) Pay received under this section shall terminate if:

(1) The employee has a break in service of 1 workday or more; or

(2) The employee is demoted based on conduct or unacceptable performance or at the employee's request.

26. The authority citation for subpart H of part 359 continues to read as follows:

Authority: 5 U.S.C. 3133 and 3136.

27. Section 359.803 is amended by revising the first sentence to read as follows:

Subpart H—Furloughs in the Senior Executive Service

§ 359.803 Competition.

Any furlough for more than 30 calendar days, or for more than 22 workdays if the furlough does not cover consecutive calendar days, shall be made under competitive procedures established by the agency. * * *

PART 534—PAY UNDER OTHER SYSTEMS

28. The authority citation for part 534 is revised to read as follows:

Authority: 5 U.S.C. 1104, 5307, 5351, 5352, 5353, 5376, 5383, 5384, 5385, 5541, and 5550a.

29. Section 534.401 is amended by revising paragraph (c)(3) and paragraph (f) to read as follows:

Subpart D—Pay and Performance Awards Under the Senior Executive Service

§ 534.401 Definitions and setting individual basic pay.

* * * * *

(c) * * *

(3) An appointing authority may lower the pay for a senior executive only one rate at the time of an adjustment. Restrictions on reducing pay of career senior executives are in paragraph (f) of this section.

* * * * *

(f) *Restrictions on reducing pay of career senior executives.*

(1) The ES rate of a career senior executive may be reduced involuntarily in the appointee's agency or upon a transfer of function to another agency only:

(i) For performance reasons, i.e., the executive has received a less than fully successful performance rating under 5 CFR part 430, subpart C, or has been conditionally recertified or not recertified under 5 CFR 317.504; or

(ii) As a disciplinary action resulting from conduct related activity, e.g., misconduct, neglect of duty, or malfeasance.

(2) If the pay reduction is for performance reasons, the agency shall provide the executive at least 15 days' advance written notice.

(3) If the pay reduction is for disciplinary reasons, the agency shall:

(i) Provide the executive at least 30 days' advance written notice;

(ii) Provide a reasonable time, but not less than 7 days, for the executive to answer orally and in writing and to furnish affidavits and other documentary evidence in support of the answer;

(iii) Allow the executive to be represented by an attorney or other representative; and

(iv) Provide the executive a written decision and specific reasons therefor at the earliest practicable date.

30. Section 534.403 is amended by revising paragraph (a)(1), redesignating paragraph (a)(2) as paragraph (a)(3), adding new paragraphs (a)(2) and (a)(4), adding a sentence at the end of paragraph (c), and by adding a sentence at the end of paragraph (f) to read as follows:

§ 534.403 Performance awards.

(a) * * *

(1) To be eligible for an award, the individual must have been an SES career appointee as of the end of the performance appraisal period; and the individual's most recent performance rating of record under part 430, subpart

C, of this chapter for the appraisal period must have been ''Fully Successful'' or higher.

(2) Individuals eligible for a performance award include:

(i) A former SES career appointee who elected to retain award eligibility under 5 CFR part 317, subpart H. If the salary of the individual is above the ES–6 pay rate, the ES–6 rate is used for crediting the agency award pool under paragraph (b) of this section and the amount the individual may receive under paragraph (c) of this section.

(ii) A reemployed annuitant with an SES career appointment.

(iii) An SES career appointee who is on detail. If the detail is to another agency, eligibility is in the individual's official employing agency, i.e., the agency from which detailed. If the appointee is on a reimbursable detail, the agency to which the appointee is detailed may reimburse the employing agency for some or all of any award, as agreed upon by the two agencies; but the reimbursement does not affect the award pool for either agency as calculated under paragraph (b) or this section.

* * * * *

(4) The agency head must consider the recommendations of the Performance Review Board (PRB), but the agency head has the final authority as to who is to receive a performance award and the amount of the award.

* * * * *

(c) * * * The rate of basic pay does not include locality-based comparability payments under 5 U.S.C. 5304 and 5 CFR part 531, subpart F, or special law enforcement adjustments under section 404 of the Federal Employees Pay Comparability Act of 1990 and 5 CFR part 531, subpart C.

* * * * *

(f) * * * The full performance award, however, is charged against the agency bonus pool under paragraph (b) of this section for the fiscal year in which the initial payment was made.

31. Section 534.405 is added to subpart D to read as follows:

§ 534.405 Restrictions on premium pay and compensatory time.

(a) Under 5 U.S.C. 5541(2)(xvi) and 5 CFR 550.101(b)(18), members of the Senior Executive Service (SES) are excluded from premium pay, including overtime pay.

(b) Since SES members are not eligible for overtime pay, they also are not eligible for compensatory time in lieu of overtime pay for work performed as an SES member. SES members are eligible, however, for compensatory time off for religious purposes under 5 U.S.C. 5550a and 5 CFR part 550, subject J.

[FR Doc. 95–2557 Filed 2–1–95; 8:45 am]

BILLING CODE 6325–01–M

OFFICE OF GOVERNMENT ETHICS

5 CFR Part 2635

RINs 3209–AA04, 3209–AA15

Further Grace Period Extension for Certain Existing Agency Standards of Conduct

AGENCY: Office of Government Ethics (OGE).

ACTION: Final rule; technical amendment.

SUMMARY: The Office of Government Ethics is granting a further grandfathering grace period extension for up to eleven months for certain existing executive agency standards of conduct, dealing with financial interest prohibitions and prior approval for outside employment and activities, which have been temporarily preserved. This further action (one previous extension was granted last year) is necessary because many agencies have not been able to issue, with OGE concurrence and co-signature, interim or final supplemental regulations during the first two years' grace period. This further extension will help ensure that agencies which have submitted draft supplementals to OGE will have adequate time to issue, if they so desire, successor regulatory provisions to replace grandfathered financial interest prohibitions and prior approval requirements.

EFFECTIVE DATE: February 3, 1995.

FOR FURTHER INFORMATION CONTACT: William E. Gressman, Office of Government Ethics, telephone: 202–523–5757, FAX: 202–523–6325.

SUPPLEMENTARY INFORMATION: The Office of Government Ethics is granting under the executive branch standards of ethical conduct a further extension of time for up to eleven months, until January 3, 1996, for certain agencies' existing conduct standards dealing with prohibited financial interests and prior approval for outside employment and activities. When OGE published its ethical conduct standards for executive branch employees in the **Federal Register** on August 7, 1992 (as now codified at 5 CFR part 2635), it provided that most existing individual agency standards of conduct would be superseded once the executive branch-wide standards took effect on February 3, 1993. However, OGE also provided, by means of notes following 5 CFR 2635.403(a) and 2635.803, that any existing agency standards dealing with the two types of restrictions noted above would be preserved for one more year, until February 3, 1994, or until the agency concerned issued (with OGE concurrence and co-signature) a supplemental regulation, whichever occurred first. See 57 FR 35006–35067, as corrected at 57 FR 48557 and 52583. Last year, OGE extended that original grace period for an additional year, until February 3, 1995 (or until agency issuance of a supplemental regulation), for those executive branch departments and agencies that had not yet had a chance to issue final or interim final successor rules. See 59 FR 4779–4780 (February 2, 1994) and, in particular, appendix A which was added to part 2635 at that time.

Through OGE's liaison efforts, the Office of the Federal Register (OFR) has assigned new chapters, including parts, at the end of title 5 of the Code of Federal Regulations to accommodate agencies' future supplemental standards regulations (on these two and other appropriate subject areas), as well as any supplemental agency regulations under OGE's executive branch-wide financial disclosure provisions at 5 CFR part 2634. Some 60 agencies have had such chapters reserved, including those which have by now already issued, with OGE concurrence and co-signature, interim final or final supplemental ethics regulations. However, many agencies have still not yet had the time to issue their planned supplemental standards regulations in interim or final form.

The Office of Government Ethics has therefore determined to permit a further preservation of existing agency regulatory standards of conduct setting forth financial interest prohibitions and outside employment and activities prior approval requirements for up to eleven more months, until January 3, 1996 (or until issuance by each agency of its supplemental regulation, whichever comes first), for those agencies which submitted draft supplemental standards regulations to OGE on or before January 25, 1995. This is the last grace period extension that OGE intends to grant. The agencies subject to this further grandfathering grace period extension, as provided in the notes (which are hereby being further amended) following 5 CFR 2635.403(a) and 2635.803, are enumerated at new appendix B which OGE is adding to part 2635. The agencies are listed in the order of the assignment of their chapter numbers at the end of 5 CFR. Agencies

not listed either have not expressed an interest in issuing supplemental agency ethics regulations, have indicated to OGE that they are no longer interested in a further grace period extension, did not file draft supplemental standards regulations with OGE by January 25, 1995, or have already issued final or interim final supplemental standards.

The Office of Government Ethics notes that it is not by this rulemaking setting a deadline for agencies to submit supplemental ethics regulations. Agencies can, with OGE concurrence and co-signature, issue supplementals at any time. Further, they can, at any time, have new title 5 CFR chapters reserved through OGE and OFR for such purpose if they have not already done so.

Moreover, if an agency's prohibited financial interest (and/or prior approval) restrictions are based on a separate statute, they are not superseded by the 5 CFR part 2635 executive branch-wide standards. If any related regulatory provisions were located in its old agency standards of conduct, the agency concerned could, after consultation with OGE, retain them in their existing place in the agency's own CFR title and chapter or move the provisions to another appropriate part of its regulations. See 5 CFR 2635.105(c)(3). Only prior standards of conduct provisions that are purely regulatory in nature are subject to supersession from the executive branch-wide regulation at 5 CFR part 2635, with entitlement to the successive grace periods for the two enumerated types of provisions as provided in the further amended notes at §§ 2635.403(a) and 2635.803 as well as appendixes A and B.

Administrative Procedure Act

Pursuant to 5 U.S.C. 553(b) and (d), as Director of the Office of Government Ethics, I find good cause exists for waiving the general notice of proposed rulemaking and 30-day delay in effectiveness as to this grace period extension. The notice and delayed effective date are being waived because this rulemaking concerns a matter of agency organization, practice and procedure. Furthermore, it is in the public interest that those agencies concerned have adequate time to promulgate successor provisions to their existing standards of conduct regulations in these two areas without a lapse in necessary regulatory restrictions.

Executive Order 12866

In promulgating this grace period extension technical amendment, the Office of Government Ethics has adhered to the regulatory philosophy and the applicable principles of regulation set forth in section 1 of Executive Order 12866, Regulatory Planning and Review. This amendment has not been reviewed by the Office of Management and Budget under that Executive order, as it is not deemed ''significant'' thereunder.

Regulatory Flexibility Act

As Director of the Office of Government Ethics, I certify under the Regulatory Flexibility Act (5 U.S.C. chapter 6) that this rulemaking will not have a significant economic impact on a substantial number of small entities.

Paperwork Reduction Act

The Paperwork Reduction Act (44 U.S.C. chapter 35) does not apply because this rulemaking does not contain information collection requirements that require the approval of the Office of Management and Budget.

List of Subjects in 5 CFR Part 2635

Conflict of interests, Government employees.

Approved: January 27, 1995.

Stephen D. Potts,

Director, Office of Government Ethics.

Accordingly, pursuant to its authority under title IV of the Ethics in Government Act and Executive Orders 12674 and 12731, the Office of Government Ethics is amending 5 CFR part 2635 as follows:

PART 2635—[AMENDED]

1. The authority citation for part 2635 continues to read as follows:

Authority: 5 U.S.C. 7351, 7353; 5 U.S.C. App. (Ethics in Government Act of 1978); E.O. 12674, 54 FR 15159, 3 CFR, 1989 Comp., p. 215, as modified by E.O. 12731, 55 FR 42547, 3 CFR, 1990 Comp., p. 306.

2. The notes following both §§ 2635.403(a) and 2635.803 are amended by adding a new sentence at the end of each to read as follows:

Note: * * * Provided further, that for those agencies listed in appendix B to this part, the grace period for any such existing provisions shall be further extended for an additional eleven months until January 3, 1996 (for a total of two years and eleven months after the effective date of this part) or until issuance by each individual agency concerned of a supplemental regulation, whichever occurs first.

3. A new appendix B is added at the end of part 2635 to read as follows:

Appendix B to Part 2635—Agencies Entitled to a Further (Second) Grace Period Extension Pursuant to Notes Following §§ 2635.403(a) and 2635.803

1. Department of the Treasury
2. Federal Deposit Insurance Corporation
3. Department of Energy
4. Federal Energy Regulatory Commission
5. Department of the Interior
6. Department of Commerce
7. Department of Justice
8. Federal Communications Commission
9. Farm Credit Administration
10. Securities and Exchange Commission
11. Office of Personnel Management
12. Thrift Depositor Protection Oversight Board
13. United States Information Agency
14. Occupational Safety and Health Review Commission
15. Department of State
16. Department of Labor
17. National Science Foundation
18. Small Business Administration
19. Department of Health and Human Services
20. Federal Labor Relations Authority
21. Department of Transportation
22. Pension Benefit Guaranty Corporation
23. Export-Import Bank of the United States
24. Department of Education
25. Environmental Protection Agency
26. National Transportation Safety Board
27. General Services Administration
28. Board of Governors of the Federal Reserve System
29. United States Postal Service
30. National Labor Relations Board
31. Equal Employment Opportunity Commission
32. Resolution Trust Corporation
33. Department of Housing and Urban Development
34. National Archives and Records Administration
35. Peace Corps
36. Tennessee Valley Authority
37. Consumer Product Safety Commission
38. Executive Office of the President
39. Department of Agriculture
40. Federal Mine Safety and Health Review Commission
41. Office of Management and Budget
42. Agency for International Development

[FR Doc. 95–2597 Filed 2–1–95; 8:45 am]

BILLING CODE 6345–01–U

DEPARTMENT OF AGRICULTURE

Agricultural Marketing Service

7 CFR Part 985

[FV94–985–4FIR]

Spearmint Oil Produced in the Far West; Revision of the Salable Quantities and Allotment Percentages for ''Class 1'' (Scotch) and ''Class 3'' (Native) Spearmint Oil for the 1994–95 Marketing Year

AGENCY: Agricultural Marketing Service, USDA.

ACTION: Final rule.

SUMMARY: The Department of Agriculture (Department) is adopting as a final rule, without change, the provisions of two interim final rules increasing the quantities of ''Class 1'' (Scotch) and ''Class 3'' (Native) spearmint oil produced in the Far West that handlers may purchase from, or handle for, producers during the 1994–95 marketing year. This rule was recommended by the Spearmint Oil Administrative Committee (Committee), the agency responsible for local administration of the marketing order for spearmint oil produced in the Far West. The Committee recommended this rule to avoid extreme fluctuations in supplies and prices and thus help to maintain stability in the Far West spearmint oil market.

EFFECTIVE DATE: March 6, 1995.

FOR FURTHER INFORMATION CONTACT: Robert J. Curry, Northwest Marketing Field Office, Marketing Order Administration Branch, Fruit and Vegetable Division, AMS, USDA, 1220 S.W. Third Avenue, Room 369, Portland, Oregon 97204–2807; telephone: (503) 326–2724; or Caroline C. Thorpe, Marketing Order Administration Branch, Fruit and Vegetable Division, AMS, USDA, Room 2525, South Building, P.O. Box 96456, Washington, D.C. 20090–6456; telephone: (202) 720–8139.

SUPPLEMENTARY INFORMATION: This final rule is issued under Marketing Order No. 985 [7 CFR part 985], regulating the handling of spearmint oil produced in the Far West (Washington, Idaho, Oregon, and designated parts of California, Nevada, Montana, and Utah). This marketing order is effective under the Agricultural Marketing Agreement Act of 1937, as amended [7 USC 601–674], hereinafter referred to as the ''Act.''

The Department of Agriculture (Department) is issuing this rule in conformance with Executive Order 12866.

This rule has been reviewed under Executive Order 12778, Civil Justice Reform. Under the provisions of the marketing order now in effect, salable quantities and allotment percentages may be established for classes of spearmint oil produced in the Far West. This final rule finalizes increases in the quantities of ''Class 1'' and ''Class 3'' spearmint oil produced in the Far West that may be purchased from or handled for producers by handlers during the 1994–95 marketing year, which ends on May 31, 1995. This rule will not preempt any State or local laws, regulations, or policies, unless they present an irreconcilable conflict with this rule.

The Act provides that administrative proceedings must be exhausted before parties may file suit in court. Under section 608c(15)(A) of the Act, any handler subject to an order may file with the Secretary a petition stating that the order, any provision of the order, or any obligation imposed in connection with the order is not in accordance with law and request a modification of the order or to be exempted therefrom. A handler is afforded the opportunity for a hearing on the petition. After the hearing the Secretary would rule on the petition. The Act provides that the district court of the United States in any district in which the handler is an inhabitant, or has his or her principal place of business, has jurisdiction in equity to review the Secretary's ruling on the petition, provided a bill in equity is filed not later than 20 days after date of the entry of the ruling.

Pursuant to requirements set forth in the Regulatory Flexibility Act (RFA), the Administrator of the Agricultural Marketing Service (AMS) has considered the economic impact of this action on small entities.

The purpose of the RFA is to fit regulatory actions to the scale of business subject to such actions in order that small businesses will not be unduly or disproportionately burdened. Marketing orders issued pursuant to the Act, and rules issued thereunder, are unique in that they are brought about through group action of essentially small entities acting on their own behalf. Thus, both statutes have small entity orientation and compatibility.

There are 8 spearmint oil handlers subject to regulation under the marketing order and approximately 260 producers of spearmint oil in the regulated production area. Of the 260 producers, approximately 160 producers hold ''Class 1'' (Scotch) spearmint oil allotment base, and approximately 145 producers hold ''Class 3'' (Native) spearmint oil allotment base. Small agricultural service firms have been defined by the Small Business Administration [13 CFR 121.601] as those having annual receipts of less than $5,000,000, and small agricultural producers are defined as those whose annual receipts are less than $500,000. A minority of handlers and producers of Far West spearmint oil may be classified as small entities.

The Far West spearmint oil industry is characterized by producers whose farming operations generally involve more than one commodity and whose income from farming operations is not exclusively dependent on the production of spearmint oil. The U.S. production of spearmint oil is concentrated in the Far West, primarily Washington, Idaho, and Oregon (part of the area covered by the marketing order). Spearmint oil is also produced in the Midwest. The production area covered by the marketing order normally accounts for 75 percent of the annual U.S. production of spearmint oil.

The salable quantity is the total quantity of each class of oil that handlers may purchase from, or handle for, producers during a marketing year. The salable quantity calculated by the Committee is based on the estimated trade demand. The total salable quantity is divided by the total industry allotment base to determine an allotment percentage. Each producer is allotted a share of the salable quantity by applying the allotment percentage to the producer's allotment base for the applicable class of spearmint oil.

This final rule finalizes two interim final rules that increased the quantities of the Scotch and Native classes of spearmint oil that handlers may purchase from, or handle for, producers during the 1994–95 marketing year, which ends on May 31, 1995.

The initial salable quantities and allotment percentages for the Scotch and Native classes of spearmint oil for the 1994–95 marketing year were recommended by the Committee at its October 6, 1993, meeting. The Committee recommended salable quantities of 723,326 pounds and 897,388 pounds, and allotment percentages of 41 percent and 46 percent, respectively, for the Scotch and Native classes of spearmint oil. A proposed rule to implement the Committee's October 6, 1993, recommendation was published in the December 21, 1993, issue of the **Federal Register** [58 FR 67378]. Comments on the proposed rule were solicited from interested persons until January 20, 1994. No comments were received. Accordingly, based upon analysis of available information, a final rule

establishing the Committee's recommendation as the salable quantities and allotment percentages for the Scotch and Native classes of spearmint oil for the 1994–95 marketing year was published in the March 16, 1994, issue of the **Federal Register** [59 FR 12151].

At its June 14, 1994, teleconference meeting, the Committee unanimously recommended that the salable quantity and allotment percentage for Native spearmint oil for the 1994–95 marketing year be increased. The Committee recommended that the Native spearmint oil salable quantity be increased from 897,388 pounds to 1,092,577 pounds, and that the allotment percentage, based on a revised total allotment base of 1,951,032 pounds, be increased from 46 to 56 percent resulting in a 195,189 pound increase in the salable quantity.

An interim final rule incorporating the Committee's June 14, 1994, recommendation was published in the August 26, 1994, **Federal Register** [59 FR 44028]. Comments on the interim rule were solicited from interested persons until September 26, 1994. No comments were received.

Pursuant to authority contained in §§ 985.50, 985.51, and 985.52 of the marketing order, at its October 5, 1994, meeting, the Committee recommended by a unanimous vote to increase the salable quantity and allotment percentage for Scotch spearmint oil. The Committee also recommended by a 10 to 1 vote to again increase the salable quantity and allotment percentage for Native spearmint oil. The person voting in opposition favored a smaller increase in the salable quantity and allotment percentage for Native spearmint oil.

Specifically, the Committee recommended that the salable quantities and allotment percentages for Scotch and Native classes of spearmint oil for the 1994–95 marketing year be increased from 723,326 pounds to 811,516 pounds, and from 1,092,577 pounds to 1,287,680 pounds, respectively. Based on a revised total allotment base of 1,763,795 pounds, the allotment percentage for Scotch spearmint oil was increased from 41 percent to 46 percent, resulting in an 88,190 pound increase in the salable quantity. Further, based on the same revised total allotment base published in the August 26, 1994, **Federal Register** [59 FR 44028] the allotment percentage for Native spearmint oil was increased from 56 percent to 66 percent, resulting in a 195,103 pound increase in the salable quantity.

An interim final rule incorporating the Committee's October 5, 1994, recommendation was published in the October 31, 1994, **Federal Register** [59 FR 54376]. Comments on the interim final rule were solicited from interested persons until November 30, 1994. No comments were received.

SCOTCH SPEARMINT OIL RECOMMENDATIONS

	Oct. 6, 1993	Oct. 5, 1994
(1) Salable Quantity	723,326	811,516
(2) Total Allotment Base	1,764,209	1,763,795
(3) Allotment Percentage	41	46

NATIVE SPEARMINT OIL RECOMMENDATIONS

	Oct. 6, 1993	June 14, 1994	Oct. 5, 1994
(1) Salable Quantity	897,388	1,092,577	1,287,680
(2) Total Allotment Base	1,950,843	1,951,032	1,951,032
(3) Allotment Percentage	46	56	66

In making this recommendation, the Committee considered all available information on supply and demand. As of October 5, 1994, the Committee reported that of the respective 1994–95 Scotch and Native spearmint oil salable quantities of 723,326 pounds and 1,092,577 pounds, approximately 116,000 pounds and 87,000 pounds, respectively, remained available for handling. Handlers indicated, however, that demand may approximate 200,000 pounds of Scotch spearmint oil, and 300,000 pounds of Native spearmint oil for the remainder of this marketing year. This level of demand was not anticipated by the Committee when it made its initial recommendation for the establishment of the Scotch and Native spearmint oil salable quantities and allotment percentages for the 1994–95 marketing year, nor was it foreseen when the Committee made its June 14, 1994, recommendation for an increase in the Native spearmint oil salable quantity and allotment percentage.

The recommended salable quantity of 811,516 pounds of Scotch spearmint oil (an increase of 88,190 pounds), combined with the actual June 1, 1994, carry-in of 145,809 pounds, resulted in a revised 1994–95 available supply of 957,325 pounds. Similarly, the recommended salable quantity of 1,287,680 pounds of Native spearmint oil (an increase of 195,103 pounds), combined with the revised June 1, 1994, carry-in of 19,139 pounds, resulted in a revised 1994–95 available supply of 1,306,819 pounds. The revised available supplies of the Scotch and Native classes of spearmint oil, respectively, are approximately 67,000 pounds and 227,000 pounds higher than the respective annual average of sales for the past five years. The Committee anticipates that foreseeable demand for both classes of oil will be adequately met with the recommended increase.

The Department, based on its analysis of available information, has determined that allotment percentages of 46 percent and 66 percent, respectively, should be established for the Scotch and Native classes of spearmint oil for the 1994–95 marketing year. These percentages will provide an increased salable quantity of 811,516 pounds of Scotch spearmint oil and an increased salable quantity of 1,287,680 pounds of Native spearmint oil.

Based on available information, the Administrator of the AMS has determined that this final rule will not have a significant economic impact on a substantial number of small entities.

After consideration of all relevant matter presented, including that contained in the prior proposed, final, and interim final rules in connection with the establishment of the salable quantities and allotment percentages for the Scotch and Native classes of spearmint oil for the 1994–95 marketing year, the Committee's recommendation and other available information, it is found that finalizing the changes to section 985.213 that increased the salable quantities and allotment percentages for the Scotch and Native classes of spearmint oil, as hereinafter set forth, will tend to effectuate the declared policy of the Act.

List of Subjects in 7 CFR Part 985

Marketing agreements, Oils and fats, Reporting and recordkeeping requirements, Spearmint oil.

For the reasons set forth in the preamble, 7 CFR part 985 is amended as follows:

PART 985—SPEARMINT OIL PRODUCED IN THE FAR WEST

Accordingly, the interim final rule amending 7 CFR part 985 which was published at 59 FR 44028 on August 26, 1994, and amended by an interim final rule published at 59 FR 54376 on October 31, 1994, is adopted as a final rule without change.

Dated: January 27, 1995.

Sharon Bomer Lauritsen,

Deputy Director, Fruit and Vegetable Division.

[FR Doc. 95–2582 Filed 2–1–95; 8:45 am]

BILLING CODE 3410–02–P

---

7 CFR Part 997

[Docket No. FV94–997–1FIR]

Assessment Obligations for Non-signatory Handlers; Peanut Handlers Not Subject to Peanut Marketing Agreement No. 146

AGENCY: Agricultural Marketing Service, USDA.

ACTION: Final rule.

SUMMARY: The Department of Agriculture (Department) is adopting as a final rule, with modifications, the provisions of an interim final rule implementing administrative assessments on handlers who are not signatory (non-signatory handlers) to Peanut Marketing Agreement No. 146 (Agreement). The interim final rule provided notice that the Department would begin assessing non-signatory handlers during the 1994–95 crop year. However, because of an unforeseen delay in installing an assessment collection database, the Department will not begin assessing non-signatory handlers until the 1995–96 crop year. The postponement will allow the installation to be completed and all affected handlers to be notified prior to the beginning of the 1995–96 crop year will be established by the Department in the spring of 1995.

EFFECTIVE DATE: March 6, 1995.

FOR FURTHER INFORMATION CONTACT: Richard Lower or Mark Slupek, Marketing Order Administration Branch, Fruit and Vegetable Division, AMS, USDA, Room 2523–S, P.O. Box 96456, Washington, DC 20090–6456; telephone: (202) 720–2020, FAX (202) 720–5698.

SUPPLEMENTARY INFORMATION: This final rule is issued pursuant to the requirements of the Agricultural Marketing Agreement Act of 1937 (Act), as amended [7 U.S.C. 601–674], and as further amended December 12, 1989, Public Law 101–220, section 4 (1), (2), 103 Stat. 1878, and August 10, 1993, Public Law 103–66, section 8b(b)(1), 107 Stat. 312.

The Department is issuing this rule in conformance with Executive Order 12866.

This rule has been reviewed under Executive Order 12778, Civil Justice Reform. The Department will establish a 1995–96 crop year assessment rate applicable to non-signatory handlers effective July 1, 1995–June 30, 1996. Segregation 1 farmers stock peanuts received or acquired by non-signatory handlers during that crop year will be subject to the assessment. This rule will not preempt any State or local laws, regulations, or policies, unless they present an irreconcilable conflict with this rule. There are no administrative procedures which must be exhausted prior to any judicial challenge to the provisions of this final rule.

Pursuant to requirements set forth in the Regulatory Flexibility Act (RFA), the Administrator of the Agricultural Marketing Service (AMS) has considered the economic impact of this action on small entities.

The purpose of the RFA is to fit regulatory actions to the scale of business subject to such actions in order that small businesses will not be unduly or disproportionately burdened.

There are approximately 45 handlers of peanuts who have not signed the Agreement and, thus, will be subject to the regulations specified herein. The Small Business Administration defines small agricultural service firms [13 CFR 121.601] as those having annual receipts of less than $5,000,000 and small agricultural producers as those whose annual receipts are less than $500,000. A majority of non-signatory handlers and peanut producers may be classified as small entities.

Since aflatoxin was found in peanuts in the mid-1960's, the domestic peanut industry has sought to minimize aflatoxin contamination in peanuts and peanut products. The Agreement was established in 1965 and plays a very important role in the industry's quality control efforts. The Peanut Administrative Committee (Committee) was established by the Agreement and works with the Department in administering the marketing agreement program. Approximately 95 percent of the area peanut crop is marketed by handlers who are signatory to the Agreement. Requirements established pursuant to the Agreement provide that farmers stock peanuts with visible *Aspergillus flavus* mold (the principal source of aflatoxin) must be diverted to non-edible uses. Each lot of shelled peanuts and certain cleaned inshell peanuts destined for edible channels must be officially sampled and chemically tested for aflatoxin by the Department or in laboratories approved by the Committee.

Public Law 101–220, enacted December 12, 1989, amended section 608b of the Act to require that all peanuts handled by persons who have not entered into the Agreement (non-signers) be subject to quality and inspection requirements to the same extent and manner as are required under the Agreement. Approximately 5 percent of the U.S. peanut crop is marketed by non-signer handlers.

Under the non-signer provisions, no peanuts may be sold or otherwise disposed of for human consumption if the peanuts fail to meet the quality requirements of the Agreement. Regulations to implement Pub. L. 101–220 were made effective on December 4, 1990 [55 FR 49980], and amended several times thereafter, and are published in 7 CFR part 997. All such amendments were made to ensure that the non-signer handling requirements remain consistent with modifications to the handling requirements applied to signatory handlers under the Agreement. The most recent amendment was published on August 30, 1994 [59 FR 44610].

Public Law 103–66 [107 Stat. 312], enacted August 10, 1993, provides for mandatory assessment of farmer's stock peanuts acquired by non-signatory peanut handlers. Under this law, paragraph (b) of section 1001, of the Agricultural Reconciliation Act of 1993, specifies that: (1) Any assessment (except indemnification assessments) imposed under the Agreement on signatory handlers also shall apply to non-signatory handlers, and (2) such assessment shall be paid to the Secretary.

This rule will add new permanent § 997.51 Assessments to part 997—Provisions Regulating the Quality of Domestically Produced Peanuts Handled by Persons Not Subject to the Peanut Marketing Agreement. Notice of the actual assessment rate established for each crop year will be issued as a new section as an Implementing Regulation beginning with § 997.100 Assessment rate, and be sequentially numbered each succeeding year. Because of the Department's decision to postpone the imposition of assessments on non-signatory handlers until the 1995–96 crop year, an assessment rate

will not be established until the spring of 1995.

The Committee meets in February or March each year and recommends to the Secretary a per ton, administrative assessment of Segregation 1, farmers stock peanuts received or acquired by signatory handlers for the upcoming crop year. The crop year covers the 12-month period from July 1 to June 30.

Therefore, pursuant to Public Law 103–66 and subsequent to the receipt of such a recommendation in 1995, the Department will initiate rulemaking procedures to assess non-signatory handlers. The assessment will be based on: (1) Tonnage reported on incoming inspection certificates of each handler's Segregation 1 farmers stock peanuts received or acquired for the handler's account and (2) tonnage reported on FV–117 ''Weekly Report of Uninspected Farmers Stock Seed Peanuts Received for Custom Seed Shelling.'' If an administrative assessment rate of $.60 per ton were established, a handler who received or acquired 50,000 tons of Segregation 1 farmers stock peanuts and 50,000 tons of uninspected farmers stock peanuts for seed would pay an assessment of $60.

The assessment will be applied to peanuts intended for human consumption and peanuts intended for non-human consumption outlets such as seed, oilstock and animal feed. The assessment will be applied to peanuts received or acquired for a handler's account, including the handler's own production. Assessment will not be applied on Segregation 1 peanut lots received or acquired by a handler from other handlers or from the Commodity Credit Corporation (CCC) program received for non-edible use, or lots received on behalf of an area association pursuant to warehousing services [§ 997.20(a)].

The assessment will be applied, pro rata, on non-signatory handlers who perform handling functions defined in § 997.14. Handling is defined as engaging in the receiving or acquiring, cleaning and shelling, cleaning inshell, or crushing of peanuts and in the shipment (except as a common or contract carrier of peanuts owned by another) or sale of cleaned inshell or shelled peanuts or other activity causing peanuts to enter the current of commerce. Handling does not include the sale or delivery of peanuts by a producer to a handler or to an intermediary person engaged in delivering peanuts to handlers and the sale or delivery of peanuts by such intermediary to a handler.

Section 997.15 defines a non-signatory handler as any person who handles peanuts, in a capacity other than that of a custom cleaner or dryer, and assembler, a warehouse person or other intermediary between the producer and the non-signatory handler.

Speculators, brokers, or other entities who take possession of Segregation 1 farmers stock peanuts, submit such peanuts for incoming inspection, and subsequently enter such peanuts into the channels of commerce will pay assessments on such peanuts. Entities who receive or acquire farmers stock peanuts for the purpose of custom seed shelling will be assessed on the basis of Form FV–117 ''Weekly Report of Uninspected Farmers Stock Seed Peanuts Received for Custom Seed Shelling.'' Form FV–117 is currently required from such entities. Producer/handlers who store peanuts of their own production (farm-stored peanuts) will, at some point prior to further handling, obtain incoming inspection on such peanuts and, at that time, pay the pro-rata administrative assessment on such peanuts.

Only one administrative assessment will be applied to any lot of farmers stock peanuts. Non-signatory and signatory handlers will not pay an administrative assessment on a lot which they purchase from speculators, brokers or other such entities who have already paid an administrative assessment on the lot.

A crop year's original assessment could be increased by the Secretary based on a similar increase applied by the Secretary on signatory handlers. Such an increase will be applied on all peanuts first handled by non-signatory handlers during the crop year in which the increased assessment occurred.

Peanuts will be assessed based on the rate applicable to the crop year in which the lot is presented for incoming inspection.

Also pursuant to Pub. L. 103–66, this rule will establish that non-signatory handlers pay their administrative assessment to the Secretary. The Secretary will bill non-signatory handlers on a periodic basis determined by the Secretary. The non-signatory handler will be responsible for remitting payment by the date specified. Payment in the form of a personal check, cashier's check or money order will be remitted to the Department. Audits of each handler's account may be conducted by the Department to reconcile incoming, farmers stock volume received or acquired and assessments paid.

Violation of the non-signer regulations may result in a penalty in the form of an assessment by the Secretary equal to 140 percent of the support price for quota peanuts. The support price for quota peanuts is determined under 7 U.S.C. 1445c-3 for the crop year during which the violation occurs.

The interim final rule on these issues was published in the **Federal Register** on August 3, 1994 [59 FR 39419]. That rule invited interested persons to submit written comments through September 2, 1994. One comment supporting the collection of assessments from non-signer peanut handlers was received.

The establishment of an administrative assessment rate may impose some additional costs on non-signatory handlers. However, the costs will be in the form of uniform assessments on all handlers who are not signatory to the Agreement.

In accordance with the Paperwork Reduction Act of 1988 [44 U.S.C. Chapter 35], the information collection requirements that are contained in this rule have been previously approved by the Office of Management and Budget (OMB) and have been assigned OMB No. 0581–0163.

Based on available information, the Administrator of the AMS has determined that the issuance of this final rule will not have a significant economic impact on a substantial number of small entities.

List of Subjects in 7 CFR Part 997

Food grades and standards, Peanuts, Reporting and recordkeeping requirements.

Accordingly, the interim final rule amending 7 CFR part 997 which was published at 59 FR 39419 on August 3, 1994, is adopted as a final rule with the following change:

PART 997—PROVISIONS REGULATING THE QUALITY OF DOMESTICALLY PRODUCED PEANUTS HANDLED BY PERSONS NOT SUBJECT TO THE PEANUT MARKETING AGREEMENT

1. The authority citation for 7 CFR part 997 continues to read as follows:

Authority: 7 U.S.C. 601–674.

§ 997.100 [Removed]

2. In part 997, § 997.100 and the center heading preceding it are removed.

Dated: January 27, 1995.

Sharon Bomer Lauritsen,

Deputy Director, Fruit and Vegetable Division.

[FR Doc. 95–2581 Filed 2–1–95; 8:45 am]

BILLING CODE 3410–02–P

7 CFR Part 1011

[DA–95–02]

Milk in the Tennessee Valley Marketing Area; Temporary Revision of Certain Provisions of the Order

AGENCY: Agricultural Marketing Service, USDA.

ACTION: Revision of rule.

SUMMARY: This document reduces the supply plant shipping requirement of the Tennessee Valley Federal milk order (Order 11) for the months of March through July 1995. The proposed action was requested by Armour Food Ingredients Company (Armour), which operates a proprietary supply plant pooled under Order 11. Armour contends the action is necessary to prevent the uneconomical movement of milk and to ensure that producer milk associated with the market in the fall will continue to be pooled in the spring and summer months.

EFFECTIVE DATE: March 1, 1995, through July 31, 1995.

FOR FURTHER INFORMATION CONTACT: Nicholas Memoli, Marketing Specialist, USDA/AMS/Dairy Division, Order Formulation Branch, Room 2971, South Building, P.O. Box 96456, Washington, DC 20090–6456, (202) 690–1932.

SUPPLEMENTARY INFORMATION: The Regulatory Flexibility Act (5 U.S.C. 601–612) requires the Agency to examine the impact of a proposed rule on small entities. Pursuant to 5 U.S.C. 605(b), the Administrator of the Agricultural Marketing Service has certified that this rule will not have a significant economic impact on a substantial number of small entities. This rule lessens the regulatory impact of the order on certain milk handlers and tends to ensure that dairy farmers will continue to have their milk priced under the order and thereby receive the benefits that accrue from such pricing.

The Department is issuing this final rule in conformance with Executive Order 12866.

This final rule has been reviewed under Executive Order 12778, Civil Justice Reform. This rule is not intended to have a retroactive effect. This rule will not preempt any state or local laws, regulations, or policies, unless they present an irreconcilable conflict with this rule.

The Agricultural Marketing Agreement Act of 1937, as amended (7 U.S.C. 601–674), provides that administrative proceedings must be exhausted before parties may file suit in court. Under section 608c(15)(A) of the Act, any handler subject to an order may file with the Secretary a petition stating that the order, any provisions of the order, or any obligation imposed in connection with the order is not in accordance with law and request a modification of the order or to be exempted from the order. A handler is afforded the opportunity for a hearing on the petition. After a hearing, the Secretary would rule on the petition. The Act provides that the district court of the United States in any district in which the handler is an inhabitant, or has its principal place of business, has jurisdiction in equity to review the Secretary's ruling on the petition, provided a bill in equity is filed not later than 20 days after the date of the entry of the ruling.

This temporary revision is issued pursuant to the provisions of the Agricultural Marketing Agreement Act and the provisions of § 1011.7(b) of the Tennessee Valley order.

Notice of proposed rulemaking was issued on November 1, 1994, and published in the **Federal Register** on November 7, 1994 (59 FR 55377), concerning a proposed relaxation of the supply plant shipping requirement. The public was afforded the opportunity to comment on the proposed notice by submitting written data, views and arguments by December 7, 1994. One comment letter was received.

Statement of Consideration

The temporary revision reduces the supply plant shipping requirement from 40 to 30 percent for the period of March through July 1995. The Tennessee Valley order requires that a supply plant ship a minimum of 60 percent of the total quantity of milk physically received at the supply plant during the months of August through November, January, and February, and 40 percent in each of the other months. The order also provides authority for the Director of the Dairy Division to increase or decrease this supply plant shipping requirement by up to 10 percentage points if such a revision is necessary to obtain needed shipments of milk or to prevent uneconomic shipments.

Armour Food Ingredients states that it would have to make uneconomical shipments of milk from its Springfield, Kentucky, supply plant to meet the 40 percent shipping standard required for pool status under Order 11 during the months of March through July. Additionally, it states that the 40 percent requirement could jeopardize the continued association of producers who have supplied the Order 11 market in the fall.

At a hearing held in Charlotte, North Carolina, on January 4, 1995, Armour proposed an amendment to the Tennessee Valley order that would provide automatic pooling status for a supply plant during the months of March through July if the plant met the order's shipping requirements during the preceding months of August through February. There was no opposition to this proposal at the hearing.

Purity Dairies, Inc., a Nashville, Tennessee, handler that is regulated under the Georgia order (Order 7), filed a comment opposing the proposed revision. Purity states that it cannot procure milk from its traditional supply area in central Kentucky in competition with Armour and other Order 11 handlers because its blend price in Nashville is no longer competitive with the Order 11 blend price. It states that Armour is attracting more milk than is needed and that ''this practice of hoarding milk supplies should not be tolerated.''

There was no testimony on the record of the recently-concluded hearing to suggest that Armour is hoarding milk supplies. None of the plants which receive milk from Armour indicated that Armour was not shipping enough milk. In fact, the record showed that Armour consistently exceeded the order's 60-percent shipping requirement and that during certain short production months Armour shipped in excess of 90 percent of its milk to distributing plants.

While it is true that Purity's blend price under Order 7 and former [1] Order 98 (Nashville, Tennessee) was frequently close to or below the Order 11 blend price during the period from December 1993 through April 1994, data introduced into the record of the Charlotte hearing indicate that since July 1994 the Nashville-Springfield price relationship has returned to a more normal pattern, as shown in Table 1.

TABLE 1.—COMPARISON OF BLEND PRICES: JANUARY 1992–NOVEMBER 1994, NASHVILLE, TN (ORDER 98/7)—SPRINGFIELD, KY (ORDER 11)

	Average blend price at Nashville, TN, under order 98/7 [1]	Average blend price at Springfield, KY, under order 11	Difference
1/92–1/93	13.85	13.58	.26
12/93–/94	14.22	14.33	–.11
5/94–1/94	14.01	13.72	.28

[1] The Nashville, Tennessee, order was terminated effective July 31, 1993.

If Purity has difficulty in attracting a milk supply, it should direct its concern

to the open record for the proposed Southeast marketing area, which encompasses the Nashville area. Purity's opposition to Armour's request for a modest reduction in shipping requirements is insufficient basis for denying the request, particularly in light of the absence of any opposition to Armour's proposal at the Charlotte hearing for NO shipping requirements during the months of March through July.

After consideration of all relevant material, including the proposal set forth in the aforesaid notice, and other available information, it is hereby found and determined that the supply plant shipping percentage set forth in § 1011.7(b) should be reduced from 40 to 30 percent for the months of March through July 1995.

List of Subjects in 7 CFR Part 1011

Milk marketing orders.

For the reasons set forth in the preamble, the following provision in Title 7, Part 1011, is amended as follows:

PART 1011—MILK IN THE TENNESSEE VALLEY MARKETING AREA

1. The authority citation for 7 CFR part 1011 continues to read as follows:

Authority: Secs. 1–9, 48 Stat. 31, as amended; 7 U.S.C. 601–674.

§ 1011.7 [Amended]

2. In § 1011.7(b), the phrase ''40 percent'' is revised to read ''30 percent'' for the period of March 1, 1995, through July 31, 1995.

Dated: January 27, 1995.

Richard M. McKee,

Director, Dairy Division.

[FR Doc. 95–2587 Filed 2–1–95; 8:45 am]

BILLING CODE 3410–02–P

DEPARTMENT OF TRANSPORTATION

Federal Aviation Administration

14 CFR Part 39

[Docket No. 94–CE–13–AD; Amendment 39–9137; AD 95–02–19]

Airworthiness Directives; Jetstream Aircraft Limited (formerly British Aerospace, Regional Airlines Limited) HP137 Mk1, Jetstream Series 200, and Jetstream Models 3101 and 3201 Airplanes

AGENCY: Federal Aviation Administration, DOT.

ACTION: Final rule.

SUMMARY: This amendment adopts a new airworthiness directive (AD) that applies to Jetstream Aircraft Limited (JAL) HP137 Mk1, Jetstream series 200, and Jetstream Models 3101 and 3201 airplanes. This action requires repetitively inspecting the left and right pilot windscreens for poly vinyl butyrate (PVB) interlayer cracks, and replacing any windscreen that has a crack exceeding certain limits. Several reports of PVB interlayer cracking of pilot windscreens on the affected airplanes prompted this action. The actions specified by this AD are intended to prevent such windscreen cracking, which, if not detected and corrected, could result in decompression injuries.

DATES: Effective March 10, 1995.

The incorporation by reference of certain publications listed in the regulations is approved by the Director of the Federal Register as of March 10, 1995.

ADDRESSES: Service information that applies to this AD may be obtained from Jetstream Aircraft Limited, Manager Product Support, Prestwick Airport, Ayrshire, KA9 2RW Scotland; telephone (44–292) 79888; facsimile (44–292) 79703; or Jetstream Aircraft Inc., Librarian, P.O. Box 16029, Dulles International Airport, Washington, DC, 20041–6029; telephone (703) 406–1161; facsimile (703) 406–1469. This information may also be examined at the Federal Aviation Administration (FAA), Central Region, Office of the Assistant Chief Counsel, Room 1558, 601 E. 12th Street, Kansas City, Missouri 64106; or at the Office of the Federal Register, 800 North Capitol Street, NW., suite 700, Washington, DC.

FOR FURTHER INFORMATION CONTACT: Mr. Raymond A. Stoer, Program Officer, Brussels Aircraft Certification Office, FAA, Europe, Africa, and Middle East Office, c/o American Embassy, B–1000 Brussels, Belgium; telephone (322) 513.3830; facsimile (322) 230.6899; or Mr. John P. Dow, Sr., Project Officer, Small Airplane Directorate, Airplane Certification Service, FAA, 1201 Walnut, suite 900, Kansas City, Missouri 64106; telephone (816) 426–6932; facsimile (816) 426–2169.

SUPPLEMENTARY INFORMATION: A proposal to amend part 39 of the Federal Aviation Regulations (14 CFR part 39) to include an AD that would apply to certain JAL HP137 Mk1, Jetstream series 200, and Jetstream Models 3101 and 3201 airplanes was published in the **Federal Register** on October 14, 1994 (59 FR 52102). The action proposed to require repetitively inspecting the left and right pilot windscreens for PVB interlayer cracks, and replacing any windscreen that has a crack exceeding certain limits. The proposed action would be accomplished in accordance with Jetstream Service Bulletin 56–JA 920843, Revision 1, dated December 16, 1993.

Interested persons have been afforded an opportunity to participate in the making of this amendment. One comment was received in favor of the proposed rule and no comments were received on the FAA's determination of the cost to the public.

After careful review of all available information, the FAA has determined that air safety and the public interest require the adoption of the rule as proposed except for minor editorial corrections. The FAA has determined that these minor corrections will not change the meaning of the AD nor add any additional burden upon the public than was already proposed.

The FAA estimates that 160 airplanes in the U.S. registry will be affected by this AD, that it will take approximately 1 workhour per airplane to accomplish the required action, and that the average labor rate is approximately $55 an hour. Based on these figures, the total cost impact of the AD on U.S. operators is estimated to be $8,800. This figure does not take into account any possible window replacements or repetitive inspections. The FAA has no way of determining how many windscreens may have PVB interlayer cracks that exceed the limitations and would require replacement, or the number of repetitive inspections each owner/operator may incur.

The regulations adopted herein will not have substantial direct effects on the States, on the relationship between the national government and the States, or on the distribution of power and responsibilities among the various levels of government. Therefore, in accordance with Executive Order 12612, it is determined that this final rule does not have sufficient federalism implications to warrant the preparation of a Federalism Assessment.

For the reasons discussed above, I certify that this action (1) is not a ''significant regulatory action'' under Executive Order 12866; (2) is not a ''significant rule'' under DOT Regulatory Policies and Procedures (44 FR 11034, February 26, 1979); and (3) will not have a significant economic impact, positive or negative, on a substantial number of small entities under the criteria of the Regulatory Flexibility Act. A copy of the final evaluation prepared for this action is contained in the Rules Docket. A copy of it may be obtained by contacting the

Rules Docket at the location provided under the caption **ADDRESSES**.

List of Subjects in 14 CFR Part 39

Air transportation, Aircraft, Aviation safety, Incorporation by reference, Safety.

Adoption of the Amendment

Accordingly, pursuant to the authority delegated to me by the Administrator, the Federal Aviation Administration amends part 39 of the Federal Aviation Regulations (14 CFR part 39) as follows:

PART 39—AIRWORTHINESS DIRECTIVES

1. The authority citation for part 39 continues to read as follows:

Authority: 49 U.S.C. App. 1354(a), 1421 and 1423; 49 U.S.C. 106(g); and 14 CFR 11.89.

§ 39.13 [Amended]

2. Section 39.13 is amended by adding a new AD to read as follows:

95–02–19 Jetstream Aircraft Limited: Amendment 39–9137; Docket No. 94–CE–13–AD.

Applicability: HP137 Mk1, Jetstream Series 200, and Jetstream Models 3101 and 3201 airplanes (all serial numbers), certificated in any category.

Compliance: Required within the next 300 hours time-in-service (TIS) after the effective date of this AD, unless already accomplished, and thereafter as indicated.

To prevent pilot windscreen poly vinyl butyrate (PVB) interlayer cracking, which, if not detected and corrected, could result in decompression injuries, accomplish the following:

(a) Visually inspect the left and right windscreens for PVB interlayer cracks in accordance with the ACCOMPLISHMENT INSTRUCTIONS section of Jetstream Service Bulletin (SB) 56–JA 92043, Revision No. 1, dated December 16, 1993.

(1) If any crack is found that is within the limits specified in Pilkington Aerospace SB No. 037–56–1001, Issue Date: October 21, 1992, Revision 1: March 31, 1993, reinspect within the next 300 hours TIS, and replace or reinspect the windscreen thereafter as applicable.

(2) If any crack is found that exceeds the limits specified in Pilkington Aerospace SB No. 037–56–1001, Issue Date: October 21, 1992, Revision 1: March 31, 1993, prior to further flight, replace the windscreen with a new windscreen and reinspect within the next 2,400 hours TIS, and replace or reinspect the windscreen thereafter as applicable.

(3) If no cracks are found, reinspect the windscreen within the next 2,400 hours TIS, and replace or reinspect the windscreen thereafter as applicable.

(b) Special flight permits may be issued in accordance with §§ 21.197 and 21.199 of the Federal Aviation Regulations (14 CFR 21.197 and 21.199) to operate the airplane to a location where the requirements of this AD can be accomplished.

(c) An alternative method of compliance or adjustment of the initial or repetitive compliance times that provides an equivalent level of safety may be approved by the Manager, Brussels Aircraft Certification Office (ACO), Europe, Africa, Middle East office, FAA, c/o American Embassy, B–1000 Brussels, Belgium. The request should be forwarded through an appropriate FAA Maintenance Inspector, who may add comments and then send it to the Manager, Brussels ACO.

Note: Information concerning the existence of approved alternative methods of compliance with this AD, if any, may be obtained from the Brussels ACO.

(d) The inspections required by this AD shall be done in accordance with Jetstream Service Bulletin 56–JA 920843, Revision No. 1, dated December 16, 1993. This incorporation by reference was approved by the Director of the Federal Register in accordance with 5 U.S.C. 552(a) and 1 CFR part 51. Copies may be obtained from Jetstream Aircraft Limited, Manager Product Support, Prestwick Airport, Ayrshire, KA9 2RW Scotland; or Jetstream Aircraft Inc., Librarian, P.O. Box 16029, Dulles International Airport, Washington, DC 20041–6029. Copies may be inspected at the FAA, Central Region, Office of the Assistant Chief Counsel, Room 1558, 601 E. 12th Street, Kansas City, Missouri, or at the Office of the Federal Register, 800 North Capitol Street, NW., suite 700, Washington, DC.

(e) This amendment (39–9137) becomes effective on March 10, 1995.

Issued in Kansas City, Missouri, on January 26, 1995.

Michael K. Dahl,

Acting Manager, Small Airplane Directorate, Aircraft Certification Service.

[FR Doc. 95–2404 Filed 2–1–95; 8:45 am]

BILLING CODE 4910–13–U

---

14 CFR Part 97

[Docket No. 28013; Amdt. No. 1642]

Standard Instrument Approach Procedures; Miscellaneous Amendments

AGENCY: Federal Aviation Administration (FAA), DOT.

ACTION: Final rule.

SUMMARY: This amendment establishes, amends, suspends, or revokes Standard Instrument Approach Procedures (SIAPs) for operations at certain airports. These regulatory actions are needed because of the adoption of new or revised criteria, or because of changes occurring in the National Airspace System, such as the commissioning of new navigational facilities, addition of new obstacles, or changes in air traffic requirements. These changes are designed to provide safe and efficient use of the navigable airspace and to promote safe flight operations under instrument flight rules at the affected airports.

DATES: An effective date for each SIAP is specified in the amendatory provisions.

Incorporation by reference-approved by the Director of the Federal Register on December 31, 1980, and reapproved as of January 1, 1982.

ADDRESSES: Availability of matters incorporated by reference in the amendment is as follows:

For Examination

1. FAA Rules Docket, FAA Headquarters Building, 800 Independence Avenue, SW., Washington, DC 20591;

2. The FAA Regional Office of the region in which the affected airport is located; or

3. The Flight Inspection Area Office which originated the SIAP.

For Purchase

Individual SIAP copies may be obtained from:

1. FAA Public Inquiry Center (APA–200), FAA Headquarters Building, 800 Independence Avenue, SW., Washington, DC 20591; or

2. The FAA Regional Office of the region in which the affected airport is located.

By Subscription

Copies of all SIAPs, mailed once every 2 weeks, are for sale by the Superintendent of Documents, U.S. Government Printing Office, Washington, DC 20402.

FOR FURTHER INFORMATION CONTACT: Paul J. Best, Flight Procedures Standards Branch (AFS–420), Technical Programs Division, Flight Standards Service, Federal Aviation Administration, 800 Independence Avenue, SW., Washington, DC 20591; telephone (202) 267–8277.

SUPPLEMENTARY INFORMATION: This amendment to part 97 of the Federal Aviation Regulations (14 CFR part 97) establishes, amends, suspends, or revokes Standard Instrument Approach Procedures (SIAPs). The complete regulatory description of each SIAP is contained in official FAA form documents which are incorporated by reference in this amendment under 5 U.S.C. 552(a), 1 CFR part 51, and § 97.20 of the Federal Aviation Regulations (FAR). The applicable FAA Forms are identified as FAA Forms 8260–3, 8260–4, and 8260–5. Materials incorporated by reference are available for

examination or purchase as stated above.

The large number of SIAPs, their complex nature, and the need for a special format make their verbatim publication in the **Federal Register** expensive and impractical. Further, airmen do not use the regulatory text of the SIAPs, but refer to their graphic depiction on charts printed by publishers of aeronautical materials. Thus, the advantages of incorporation by reference are realized and publication of the complete description of each SIAP contained in FAA form documents is unnecessary. The provisions of this amendment state the affected CFR (and FAR) sections, with the types and effective dates of the SIAPs. This amendment also identifies the airport, its location, the procedure identification and the amendment number.

The Rule

This amendment to part 97 is effective upon publication of each separate SIAP as contained in the transmittal. Some SIAP amendments may have been previously issued by the FAA in a National Flight Data Center (FDC) Notice to Airmen (NOTAM) as an emergency action of immediate flight safety relating directly to published aeronautical charts. The circumstances which created the need for some SIAP amendments may require making them effective in less than 30 days. For the remaining SIAPs, an effective date at least 30 days after publication is provided.

Further, the SIAPs contained in this amendment are based on the criteria contained in the U.S. Standard for Terminal Instrument Approach Procedures (TERPS). In developing these SIAPs, the TERPS criteria were applied to the conditions existing or anticipated at the affected airports. Because of the close and immediate relationship between these SIAPs and safety in air commerce, I find that notice and public procedure before adopting these SIAPs are unnecessary, impracticable, and contrary to the public interest and, where applicable, that good cause exists for making some SIAPs effective in less than 30 days.

The FAA has determined that this regulation only involves an established body of technical regulations for which frequent and routine amendments are necessary to keep them operationally current. It, therefore—(1) is not a ''significant regulatory action'' under Executive Order 12866; (2) is not a ''significant rule'' under DOT Regulatory Policies and Procedures (44 FR 11034; February 26, 1979); and (3) does not warrant preparation of a regulatory evaluation as the anticipated impact is so minimal. For the same reason, the FAA certifies that this amendment will not have a significant economic impact on a substantial number of small entities under the criteria of the Regulatory Flexibility Act.

List of Subjects in 14 CFR Part 97

Air traffic control, Airports, Navigation (air).

Issued in Washington, DC on December 30, 1994.

Thomas C. Accardi,

Director, Flight Standards Services.

Adoption of the Amendment

Accordingly, pursuant to the authority delegated to me, part 97 of the Federal Aviation Regulations (14 CFR part 97) is amended by establishing, amending, suspending, or revoking Standard Instrument Approach Procedures, effective at 0901 UTC on the dates specified, as follows:

PART 97—STANDARD INSTRUMENT APPROACH PROCEDURES

1. The authority citation for part 97 continues to read as follows:

Authority: 49 U.S.C. app. 1348, 1354(a), 1421 and 1510; 49 U.S.C. 106(g); and 14 CFR 11.49(b)(2).

2. Part 97 is amended to read as follows:

§§ 97.23, 97.25, 97.27, 97.29, 97.31, 97.33, and 97.35 [Amended]

By amending: § 97.23 VOR, VOR/DME, VOR or TACAN, and VOR/DME or TACAN; § 97.25 LOC, LOC/DME, LDA, LDA/DME, SDF, SDF/DME; § 97.27 NDB, NDB/DME; § 97.29 ILS, ILS/DME, ISMLS, MLS, MLS/DME, MLS/RNAV; § 97.31 RADAR SIAPs; § 97.33 RNAV SIAPs; and § 97.35 COPTER SIAPs, identified as follows:

* * * *Effective March 30, 1995*

Fairbanks, AK, Fairbanks Intl, VOR OR TACAN RWY 19R, Orig
Westerly, RI, Westerly State, GPS RWY 7, Orig

* * * *Effective March 2, 1995*

Eagle Grove, IA, Eagle Grove Municipal, NDB OR GPS RWY 31, Amdt 1, Cancelled
Ruston, LA, Ruston Muni, VOR/DME–A, Amdt 11
Ruston, LA, Ruston Muni, NDB RWY 34, Amdt 2
Chesapeake, VA, Chesapeake Muni, NDB RWY 5, Orig

* * * *Effective February 2, 1995*

Cold Bay, AK, Cold Bay, ILS RWY 14, Amdt 15
Kodiak, AK, Kodiak, VOR OR TACAN OR GPS–1, RWY 25, Amdt 5
Kodiak, AK, Kodiak, NDB–1, RWY 25, Amdt 3
West Memphis, AR, West Memphis Muni, ILS RWY 17, Amdt 2
Howell, MI, Livingston County, VOR OR GPS RWY 31, Amdt 10
Howell, MI, Livingston County, NDB OR GPS RWY 13, Amdt 1
Monticello, MO, Lewis County Regional, VOR/DME–A, Orig
Monroe, NC, Monroe, LOC RWY 5, Amdt 2, Cancelled
Monroe, NC, Monroe, ILS RWY 5, Orig

* * * *Effective January 5, 1995*

Fort Leavenworth, KS, Sherman AAF, RNAV RWY 15, Amdt 1, Cancelled

* * * *Effective Upon Publication*

Victoria, TX, Victoria Regional, VOR OR GPS RWY 12L, Amdt 14
Victoria, TX, Victoria Regional, NDB RWY 12L, Amdt 4
Chesapeake, VA, Chesapeake Muni, LOC RWY 5, Amdt 1

[FR Doc. 95–2564 Filed 2–1–95; 8:45 am]

BILLING CODE 4910–13–M

DEPARTMENT OF HOUSING AND URBAN DEVELOPMENT

Office of the Secretary

24 CFR Part 907

[Docket No. R–95–1704; FR–3573–C–03]

RIN 2577–AB38

Homeownership Demonstration Program in Omaha, Nebraska; Technical Correction

AGENCY: Office of the Secretary, HUD.

ACTION: Final rule; technical correction.

SUMMARY: On January 20, 1995, HUD published a final rule implementing a demonstration program that permits the homeownership sale of single family homes administered by the Housing Authority of the City of Omaha, Nebraska (60 FR 4344). This document corrects § 907.8(d) of that final rule, to include certain amendatory language that was inadvertently omitted.

EFFECTIVE DATE: The effective date of this correction is February 2, 1995.

FOR FURTHER INFORMATION CONTACT: Gary Van Buskirk, Homeownership Division, Office of Public and Indian Housing, Department of Housing and Urban Development, 451 Seventh Street, SW., Room 4112, Washington, DC 20410. Telephone number, voice (202) 708–4233, TDD (202) 708–0850. (These are not toll-free numbers.)

SUPPLEMENTARY INFORMATION: On January 20, 1995 (60 FR 4344), HUD published a final rule implementing section 132 of the Housing and

Community Development Act of 1992 (Pub. L. 102–550, approved Oct. 28, 1992). Section 132 establishes a demonstration program to facilitate self-sufficiency and to permit the homeownership sale of single family homes administered by the Housing Authority of the City of Omaha in the State of Nebraska. The purpose of the demonstration is to exhibit the effectiveness of promoting homeownership and providing support services.

This document corrects § 907.8(d) of that final rule, to include certain amendatory language that was described in the preamble to the final rule, but inadvertently omitted from the rule text. On page 4345 of the final rule (60 FR 4345), in paragraph II.2., in the second column, the preamble states: ''Additionally, in response to the Housing Authority's comment above, the final rule includes as eligible homebuyers both current residents and applicants for public housing. Since HUD has changed the rule in this manner, the Housing Authority must comply with §§ 907.7(b), 907.8(d), and 907.20(n).'' However, while the preamble indicated that § 907.8(d) would be amended to recognize that applicants for public housing could also be eligible homebuyers, this amendment was inadvertently omitted from the rule text.

Accordingly, FR Doc. 95–1414, a final rule published in the **Federal Register** on January 20, 1995 (60 FR 4344) is corrected to read as follows:

1. Section 907.8 is corrected by revising the second sentence in paragraph (d) to read as follows:

§ 907.8 Purchaser eligibility and selection.

* * * * *

(d) *Procedures/Affirmative Fair Housing Marketing Strategy.* * * * The Housing Authority must have an affirmative fair housing marketing strategy that applies to all transactions undertaken through this program and that stresses equal access to the program for both current residents and applicants for public housing. * * *

* * * * *

Dated: January 27, 1995.

Michael B. Janis,

General Deputy Assistant Secretary for Public and Indian Housing.

[FR Doc. 95–2560 Filed 2–1–95; 8:45 am]

BILLING CODE 4210–32–P

DEPARTMENT OF THE INTERIOR

Office of Surface Mining Reclamation and Enforcement

30 CFR Part 914

[IN–118, Amendment Number 94–4]

Indiana Regulatory Program

AGENCY: Office of Surface Mining Reclamation and Enforcement (OSM), Interior.

ACTION: Final rule; approval of amendment.

SUMMARY: OSM is approving a proposed amendment to the Indiana permanent regulatory program (hereinafter referred to as the Indiana program) under the Surface Mining Control and Reclamation Act of 1977 (SMCRA). The amendment consists of miscellaneous revisions to Indiana's Surface Coal Mining and Reclamation Rules. The amendment is intended to revise the Indiana program to eliminate typographical, clerical, and spelling errors and to amend those instances where the word ''commission'' should be changed to ''director'' in accordance with Indiana Senate Enrolled Act (SEA) 362.

EFFECTIVE DATE: February 2, 1994.

FOR FURTHER INFORMATION CONTACT:

Mr. Roger W. Calhoun, Director, Indianapolis Field Office, Office of Surface Mining Reclamation and Enforcement, Minton-Capehart Federal Building, 575 North Pennsylvania Street, Room 301, Indianapolis, IN 46204, Telephone (317) 226–6166.

SUPPLEMENTARY INFORMATION:

I. Background on the Indiana Program.
II. Submission of the Amendment.
III. Director's Findings.
IV. Summary and Disposition of Comments.
V. Director's Decision.
VI. Procedural Determinations.

I. Background on the Indiana Program

On July 29, 1982, the Indiana program was made effective by the conditional approval of the Secretary of the Interior. Information pertinent to the general background on the Indiana program, including the Secretary's findings, the disposition of comments, and a detailed explanation of the conditions of approval of the Indiana program can be found in the July 26, 1982 **Federal Register** (47 FR 32107). Subsequent actions concerning the conditions of approval and program amendments are identified at 30 CFR 914.10, 914.15, and 914.16.

II. Submission of the Amendment

By letter dated September 26, 1994 (Administrative Record No. IND–1400), Indiana submitted program amendment No. 94–4 concerning miscellaneous revisions to the Indiana rules to eliminate typographical, clerical, and spelling errors and to amend those instances where the word ''commission'' should be changed to ''director'' in accordance with Indiana SEA 362. OSM approved SEA 362 as a program amendment on August 2, 1991 (56 FR 37016).

OSM announced receipt of the proposed amendment in the October 20, 1994, **Federal Register** (59 FR 52941), and, in the same notice, opened the public comment period and provided opportunity for a public hearing on the adequacy of the proposed amendment. The comment period closed on November 21, 1994.

III. Director's Findings

Set forth below, pursuant to SMCRA and the Federal regulations at 30 CFR 732.15 and 732.17, are the Director's findings concerning the proposed amendment to the Indiana program.

In amendment No. 94–4, Indiana corrected numerous typographical, clerical, or spelling errors and made numerous changes from the word ''commission'' to ''director.'' The Director finds that the numerous typographical, clerical, and spelling changes are nonsubstantive changes or changes which improve the clarity or accuracy of the Indiana rules.

The Director finds that the changes from ''commission'' to ''director'' more accurately reflect the responsibilities within the Indiana program as provided by SEA 362 which was approved by OSM on August 2, 1991 (56 FR 37016), and that the changes do not render the Indiana program less effective than Federal regulations.

IV. Summary and Disposition of Comments

Federal Agency Comments

Pursuant to section 503(b) of SMCRA and 30 CFR 732.17(h)(11)(i), comments were solicited from various interested Federal agencies. No comments were received.

Public Comments

A public comment period and opportunity to request a public hearing was announced in the October 20, 1994, **Federal Register** (59 FR 52941). The comment period closed on November 21, 1994. No one commented and no one requested an opportunity to testify

at the scheduled public hearing so no hearing was held.

Environmental Protection Agency (EPA)

Under 30 CFR 732.17(h)(11)(ii), the Director is required to obtain the written concurrence of the Administrator of the EPA with respect to any provisions of a State program amendment that relate to air or water quality standards promulgated under the authority of the Clean Water Act (33 U.S.C. 1251 *et seq.*) or the Clean Air Act (42 U.S.C. 7401 *et seq.*) The Director has determined that this amendment contains no provisions in these categories and that EPA's concurrence is not required.

Pursuant to 732.17(h)(11)(i), OSM solicited comments on the proposed amendment from EPA (Administrative Record No. IND–1403). EPA responded on October 18, 1994 (Administrative Record No. IND–1409), and stated that the amendment is acceptable.

V. Director's Decision

Based on the findings above, the Director is approving Indiana's program amendment No. 94–4, concerning miscellaneous revisions to the Indiana rules as submitted by Indiana on September 26, 1994.

The Federal regulations at 30 CFR Part 914 codifying decisions concerning the Indiana program are being amended to implement this decision. This final rule is being made effective immediately to expedite the State program amendment process and to encourage States to bring their programs into conformity with the Federal standards without undue delay. Consistency of State and Federal standards is required by SMCRA.

VI. Procedural Determinations

Executive Order 12866

This rule is exempted from review by the Office of Management and Budget (OMB) under Executive Order 12866 (Regulatory Planning and Review).

Executive Order 12778

The Department of the Interior has conducted the reviews required by section 2 of Executive Order 12778 (Civil Justice Reform) and has determined that, to the extent allowed by law, this rule meets the applicable standards of subsections (a) and (b) of that section. However, these standards are not applicable to the actual language of State regulatory programs and program amendments since each such program is drafted and promulgated by a specific State, not by OSM. Under sections 503 and 505 of SMCRA (30 U.S.C. 1253 and 1255) and 30 CFR 730.11, 732.15 and 732.17(h)(10), decisions on proposed State regulatory programs and program amendments submitted by the States must be based solely on a determination of whether the submittal is consistent with SMCRA and its implementing Federal regulations and whether the other requirements of 30 CFR parts 730, 731, and 732 have been met.

National Environmental Policy Act

No environmental impact statement is required for this rule since section 702(d) of SMCRA [30 U.S.C. 1292(d)] provides that agency decisions on proposed State regulatory program provisions do not constitute major Federal actions within the meaning of section 102(2)(C) of the National Environmental Policy Act (42 U.S.C. 4332(2)(C)).

Paperwork Reduction Act

This rule does not contain information collection requirements that require approval by OMB under the Paperwork Reduction Act (44 U.S.C. 3507 *et seq.*).

Regulatory Flexibility Act

The Department of the Interior has determined that this rule will not have a significant economic impact on a substantial number of small entities under the Regulatory Flexibility Act (5 U.S.C. 601 *et seq.*). The State submittal which is the subject of this rule is based upon counterpart Federal regulations for which an economic analysis was prepared and certification made that such regulations would not have a significant economic effect upon a substantial number of small entities. Accordingly, this rule will ensure that existing requirements previously promulgated by OSM will be implemented by the State. In making the determination as to whether this rule would have a significant economic impact, the Department relied upon the data and assumptions for the counterpart Federal regulations.

List of Subjects in 30 CFR Part 914

Intergovernmental relations, Surface mining, Underground mining.

Dated: January 27, 1995.

Tim L. Dieringer,

Acting Assistant Director, Eastern Support Center.

For the reasons set out in the preamble, title 30, chapter VII, subchapter T of the Code of Federal Regulations is amended as set forth below:

PART 914—INDIANA

1. The authority citation for part 914 continues to read as follows:

Authority: 30 U.S.C. 1201 *et seq.*

2. In section 914.15, paragraph (eee) is added to read as follows:

§ 914.15 Approval of regulatory program amendments.

* * * * *

(eee) Amendment #94–4 to the Indiana program concerning miscellaneous revisions to the Indiana rules as submitted to OSM on September 26, 1994, is approved effective February 2, 1995.

[FR Doc. 95–2547 Filed 2–1–95; 8:45 am]

BILLING CODE 4310–05–M

ENVIRONMENTAL PROTECTION AGENCY

40 CFR Part 52

[CA 95–8–6858b; FRL–5148–6]

Approval and Promulgation of Implementation Plans; California State Implementation Plan Revision; Interim Final Determination That State Has Corrected Deficiencies

AGENCY: Environmental Protection Agency (EPA).

ACTION: Interim final rule.

SUMMARY: Elsewhere in today's **Federal Register**, EPA has published a notice proposing to fully approve revisions to the California State Implementation Plan. The revisions concern Rule 8–43 from the Bay Area Air Quality Management District (BAAQMD), Rule 212 from the Placer County Air Pollution Control District (PCAPCD), Rules 67.16 and 67.18 from the San Diego County Air Pollution Control District (SDCAPCD), and Rule 4607 from the San Joaquin Valley Unified Air Pollution Control District (SJVUAPCD). The notice of proposed rulemaking published elsewhere in today's **Federal Register** provides the public with an opportunity to comment on EPA's action. If a person submits adverse comments on EPA's proposed action within 30 days of publication of the proposed action, EPA will consider these comments and respond before taking final action on the State's submittal. Based on the proposed full approval, EPA is making an interim final determination by this action that the State has corrected the deficiencies for which sanctions clocks began on August 11, 1993, and September 29, 1993. This action will defer the

application of the offset and highway sanctions. Although this action is effective upon publication, EPA will take comment on it, as well as on EPA's proposed rulemaking approving these rules. EPA's final rulemaking notice will take into consideration any comments received.

DATES: The effective date is February 2, 1995.

Comments must be received by March 6, 1995.

ADDRESSES: Comments should be sent to: Rulemaking Section (A–5–3), Air and Toxics Division, U.S. Environmental Protection Agency, Region IX, 75 Hawthorne Street, San Francisco, CA 94105.

The state submittal and EPA's analysis for that submittal, which are the basis for this action, are available for public review at the above address and at the following locations:

California Air Resources Board, Stationary Source Division, Rule Evaluation Section, 2020 ''L'' Street, Sacramento, CA 92123–1095.

Bay Area Air Quality Management District, 939 Ellis Street, San Francisco, CA 94109.

Placer County Air Pollution Control District, 11464 B. Avenue, Auburn, CA 95603.

San Diego County Air Pollution Control District, 9150 Chesapeake Drive, San Diego, CA 92123–1096.

San Joaquin Valley Unified Air Pollution Control District, 1999 Tuolumne Street, Suite 200, Fresno, CA 93721.

FOR FURTHER INFORMATION CONTACT: Erik H. Beck, Rulemaking Section [A–5–3], Air and Toxics Division, U.S. Environmental Protection Agency, Region IX, 75 Hawthorne Street, San Francisco, CA 94105–3901. Internet Email: beck.erik@epamail.epa.gov. Telephone: (415) 744–1190.

SUPPLEMENTARY INFORMATION:

I. Background

The State of California submitted the following rules on the following dates: BAAQMD Rule 8–43 (''Surface Coating of Marine Vessels''), September 28, 1994; PCAPCD Rule 212 (''Storage of Organic Liquids''), December 19, 1994; SDCAPCD Rule 67.16 (''Graphic Arts Operations''), October 19, 1994; SDCAPCD Rule 67.18 (''Marine Coating Operations''), December 22, 1994; and SJVUAPCD Rule 4607 (''Graphic Arts''), July 13, 1994. EPA published a limited disapproval in the **Federal Register** on July 12, 1993 (BAAQMD, SDCAPCD) and August 30, 1993 (SJVUAPCD, PCAPCD). These notices' **Federal Register** citations are 58 FR 37421 and 58 FR 45440 respectively. EPA's limited disapproval action started an 18-month clock for the application of one sanction (followed by a second sanction 6 months later) under section 179 of the Clean Air Act (Act) and a 24-month clock for promulgation of a Federal Implementation Plan (FIP) under section 110(c) of the Act. The State subsequently submitted revised rules on the dates listed at the top of this paragraph. In the Proposed Rules section of today's **Federal Register**, EPA is proposing full approval of the State of California's submittal of BAAQMD Rule 8–43 (''Surface Coating of Marine Vessels''), PCAPCD Rule 212 (''Storage of Organic Liquids''), SDCAPCD Rule 67.16 (''Graphic Arts Operations''), SDCAPCD Rule 67.18 (''Marine Coating Operations''), and SJVUAPCD Rule 4607 (''Graphic Arts'').

Based on the proposed approval set forth in today's **Federal Register**, EPA believes that it is more likely than not that the State has corrected the original disapproval deficiency. Therefore, EPA is taking this interim final rulemaking action, effective on publication, finding that the State has corrected the deficiency. However, EPA is also providing the public with an opportunity to comment on this interim final action. If, based upon any comments on this action and any comments on EPA's proposed full approval of the State's submittal, EPA determines that the State's submittal is not fully approvable and this interim final action was inappropriate, EPA will either propose or take final action disapproving the submittal of one or all of the State rules. As appropriate, EPA will also issue an interim final determination or a final determination that the deficiency has not been corrected. Until EPA takes such an action, the application of sanctions will continue to be deferred.

This action does not stop the sanctions clock that started for these areas on August 11, 1993 and September 29, 1993. However, this action will defer the application of the offsets and highway sanctions. See 59 FR 39832 (Aug. 4, 1994). If EPA later finalizes full approval of the State's submittal, such action will permanently stop the sanctions clock and any deferred sanctions. If EPA must withdraw the proposed approval action based on adverse comments and EPA subsequently determines in a proposed or final rule that the State, in fact, did not correct the disapproval deficiency, the sanctions consequences described in the sanctions rule will apply. See 59 FR 39832, to be codified at 40 CFR § 52.31.

II. EPA Action

EPA is taking interim final action finding that the State has corrected the disapproval deficiencies that started the sanctions clocks. Based on this action, application of the offset and highway sanctions will be deferred until final action to fully approve the State's submittal becomes effective or until EPA takes action proposing or finally disapproving in whole or part the State submittal. If EPA's proposed action fully approving the State submittal becomes finalized and effective at a later time, at that time any sanctions clocks will be permanently stopped and any applied, stayed or deferred sanctions will be permanently lifted.

Because EPA has preliminarily determined that the State has an approvable plan, relief from sanctions should be provided as quickly as possible. Therefore, EPA is invoking the good cause exception under the Administrative Procedure Act (APA) in not providing an opportunity for comment before this action takes effect.[1] 5 U.S.C. 553(b)(B). EPA believes that notice-and-comment rulemaking before the effective date of this action is impracticable and contrary to the public interest. EPA has reviewed the State's submittal and, through its proposed action, is indicating that it is more likely than not that the State has corrected the deficiency that started the sanctions clock. Therefore, it is not in the public interest to initially impose sanctions or to keep applied sanctions in place when the State has most likely done all that it can to correct the deficiency that triggered the sanctions clock. Moreover, it would be impracticable to go through notice-and comment rulemaking on a finding that the State has corrected the deficiency prior to the rulemaking approving the State's submittal. Therefore, EPA believes that it is necessary to use the interim final rulemaking process to temporarily stay or defer sanctions while EPA completes its rulemaking process on the approvability of the State's submittal. Moreover, with respect to the effective date of this action, EPA is invoking the good cause exception to the 30-day notice requirement of the APA because the purpose of this notice is to relieve a restriction. See 5 U.S.C. 553(d)(1).

The Office of Management and Budget (OMB) has exempted this action from review under Executive Order 12866.

Under the Regulatory Flexibility Act, 5 U.S.C. 600 *et seq.*, EPA must prepare a regulatory flexibility analysis assessing the impact of any proposed or final rule on small entities. 5 U.S.C. 603

[1] As previously noted, however, by this action EPA is providing the public with a chance to comment on EPA's determination after the effective date and EPA will consider any comments received in determining whether to reverse such action.

and 604. Alternatively, EPA may certify that the rule will not have a significant economic impact on a substantial number of small entities. Small entities include small businesses, small not-for-profit enterprises, and government entities with jurisdiction over populations of less than 50,000.

This action temporarily relieves sources of an additional burden potentially placed on them by the sanctions provisions of the Act. Therefore, I certify that it does not have an impact on any small entities.

List of Subjects in 40 CFR Part 52

Environmental protection, Air pollution control, Hydrocarbons, Incorporation by reference, Intergovernmental regulations, Reporting and recordkeeping, Ozone, and Volatile organic compounds.

Authority: 42 U.S.C. 7401–7671q.

Dated: January 26, 1995.

Felicia Marcus,

Regional Administrator.

[FR Doc. 95–2500 Filed 2–1–95; 8:45 am]

BILLING CODE 6560–50–U

FEDERAL EMERGENCY MANAGEMENT AGENCY

44 CFR Part 65

[Docket No. FEMA–7125]

Changes in Flood Elevation Determinations

AGENCY: Federal Emergency Management Agency (FEMA).

ACTION: Interim rule.

SUMMARY: This interim rule lists communities where modification of the base (100-year) flood elevations is appropriate because of new scientific or technical data. New flood insurance premium rates will be calculated from the modified base (100-year) flood elevations for new buildings and their contents.

DATES: These modified base flood elevations are currently in effect on the dates listed in the table and revise the Flood Insurance Rate Map(s) in effect prior to this determination for each listed community.

From the date of the second publication of these changes in a newspaper of local circulation, any person has ninety (90) days in which to request through the community that the Associate Director, Mitigation Directorate, reconsider the changes. The modified elevations may be changed during the 90-day period.

ADDRESSES: The modified base (100-year) flood elevations for each community are available for inspection at the office of the Chief Executive Officer of each community. The respective addresses are listed in the following table.

FOR FURTHER INFORMATION CONTACT: Michael K. Buckley, P.E., Chief, Hazard Identification Branch, Mitigation Directorate, 500 C Street, SW, Washington, DC 20472, (202) 646–2756.

SUPPLEMENTARY INFORMATION: The modified base (100-year) flood elevations are not listed for each community in this interim rule. However, the address of the Chief Executive Officer of the community where the modified base (100-year) flood elevation determinations are available for inspection is provided.

Any request for reconsideration must be based upon knowledge of changed conditions, or upon new scientific or technical data.

The modifications are made pursuant to Section 201 of the Flood Disaster Protection Act of 1973, 42 U.S.C. 4105, and are in accordance with the National Flood Insurance Act of 1968, 42 U.S.C. 4001 *et seq.*, and with 44 CFR part 65.

For rating purposes, the currently effective community number is shown and must be used for all new policies and renewals.

The modified base (100-year) flood elevations are the basis for the floodplain management measures that the community is required to either adopt or to show evidence of being already in effect in order to qualify or to remain qualified for participation in the National Flood Insurance Program (NFIP).

These modified elevations, together with the floodplain management criteria required by 44 CFR 60.3, are the minimum that are required. They should not be construed to mean that the community must change any existing ordinances that are more stringent in their floodplain management requirements. The community may at any time enact stricter requirements of its own, or pursuant to policies established by other Federal, State, or regional entities.

The changes in base flood elevations are in accordance with 44 CFR 65.4.

National Environmental Policy Act

This rule is categorically excluded from the requirements of 44 CFR Part 10, Environmental Consideration. No environmental impact assessment has been prepared.

Regulatory Flexibility Act

The Associate Director, Mitigation Directorate, certifies that this rule is exempt from the requirements of the Regulatory Flexibility Act because modified base (100-year) flood elevations are required by the Flood Disaster Protection Act of 1973, 42 U.S.C. 4105, and are required to maintain community eligibility in the NFIP. No regulatory flexibility analysis has been prepared.

Regulatory Classification

This proposed rule is not a significant regulatory action under the criteria of Section 3(f) of Executive Order 12866 of September 30, 1993, Regulatory Planning and Review, 58 FR 51735.

Executive Order 12612, Federalism

This rule involves no policies that have federalism implications under Executive Order 12612, Federalism, dated October 26, 1987.

Executive Order 12778, Civil Justice Reform

This rule meets the applicable standards of Section 2(b)(2) of Executive Order 12778.

List of Subjects in 44 CFR Part 65

Flood insurance, Floodplains, Reporting and recordkeeping requirements.

Accordingly, 44 CFR Part 65 is amended to read as follows:

PART 65—[AMENDED]

1. The authority citation for Part 65 continues to read as follows:

Authority: 42 U.S.C. 4001 et seq.; Reorganization Plan No. 3 of 1978, 3 CFR, 1978 Comp., p. 329; E.O. 12127, 44 FR 19367, 3 CFR, 1979 Comp., p. 376.

§ 65.4 [Amended]

2. The tables published under the authority of § 65.4 are amended as follows:

State and county	Location	Dates and name of newspaper where notice was published	Chief executive officer of community	Effective date of modification	Community No.
California: Orange.	City of Brea	December 1, 1994; December 8, 1994; *Brea Progress*.	The Honorable Glenn Parker, Mayor, City of Brea, No. 1 Civic Center Circle, Brea, California 92621.	November 8, 1994	060214
California: Riverside.	City of Corona ..	December 1, 1994; December 8, 1994; *Press Enterprise*.	The Honorable Bill Miller Mayor, City of Corona, 815 West Sixth Street, Corona, California 91720.	November 9, 1994	060250
California: Riverside.	City of Norco	December 1, 1994; December 8, 1994; *Press Enterprise*.	The Honorable Bill Vaughn Mayor, City of Norco, P.O. Box 428, Norco, California 91760.	November 9, 1994	060256
California: Los Angeles.	Unincorporated Areas.	December 23, 1994; December 30, 1994; *Daily Commerce*.	The Honorable Yvonne Burke, Chairperson, Los Angeles County, Board of Supervisors, 500 West Temple Street, Room 822, Los Angeles, California 90012.	November 18, 1994.	065043
Colorado: Douglas.	Town of Castle Rock.	December 14, 1994; December 21, 1994; *Douglas County News Press*.	The Honorable Mark Williams, Mayor, Town of Castle Rock, 680 North Wilcox Street, Castle Rock, Colorado 80104.	November 21, 1994.	080050
Colorado: Weld ..	City of Greeley .	December 21, 1994; December 28, 1994; *Greeley Daily Tribune*.	The Honorable Willie Morton, Mayor, City of Greeley, City Hall, 1000 10th Street, Greeley, Colorado 80631.	November 23, 1994.	080184
Colorado: Douglas.	Town of Larkspur.	December 21, 1994; December 28, 1994; *Douglas County News Press*.	The Honorable Florence Burch, Mayor, Town of Larkspur, P.O. Box 310, Larkspur, Colorado 80118.	November 18, 1994.	080309
Colorado: Douglas.	Unincorporated Areas.	December 21, 1994; December 28, 1994; *Douglas County News Press*.	Ms. M. Michael Cooke, Chairperson, Douglas County, Board of Commissioners, 101 Third Street, Castle Rock, Colorado 80104.	November 18, 1994.	080049
Colorado: Weld ..	Unincorporated Areas.	December 21, 1994; December 28, 1994; *Greeley Daily Tribune*.	The Honorable W. H. Webster, Chairperson, Weld County, Board of Commissioners, P.O. Box 758, Greeley, Colorado 80632.	November 23, 1994.	080266
Kansas: Johnson	City of Overland Park.	December 21, 1994; December 28, 1994; *Johnson County Sun*.	The Honorable Ed Eilert, Mayor, City of Overland Park, City Hall, 8500 Santa Fe Drive, Overland Park, Kansas 66212.	December 5, 1994	200174
New Mexico: Bernalillo.	City of Albuquerque.	December 23, 1994; December 30, 1994; *Albuquerque Tribune*.	The Honorable Martin Chavez, Mayor, City of Albuquerque, P.O. Box 1293, Albuquerque, New Mexico 87103.	November 15, 1994.	350002
Texas: Tarrant County.	City of Arlington	December 15, 1994; December 22, 1994; *Fort Worth Star Telegram*.	The Honorable Richard Greene, Mayor, City of Arlington, P.O. Box 231, Arlington, Texas 76004–0231.	November 30, 1994.	485454
Texas: Dallas	City of Grand Prairie.	December 15, 1994; December 22, 1994; *Grand Prairie Daily News*.	The Honorable Charles England, Mayor, City of Grand Prairie, 317 College Street, Grand Prairie, Texas 75053.	November 30, 1994.	485472
Texas: Harris	Unincorporated Areas.	December 9, 1994; December 16, 1994; *The Houston Post*.	The Honorable Jon Lindsay, Harris County Judge, 1001 Preston, Suite 911, Houston, Texas 77002.	November 30, 1994.	480287

(Catalog of Federal Domestic Assistance No. 83.100, ''Flood Insurance.'')

Dated: January 26, 1995.

Richard T. Moore,

Associate Director for Mitigation.

[FR Doc. 95–2592 Filed 2–1–95; 8:45 am]

BILLING CODE 6718–03–P

44 CFR Part 65

Changes in Flood Elevation Determinations

AGENCY: Federal Emergency Management Agency (FEMA).

ACTION: Final rule.

SUMMARY: Modified base (100-year) flood elevations are finalized for the communities listed below. These modified elevations will be used to calculate flood insurance premium rates for new buildings and their contents.

EFFECTIVE DATES: The effective dates for these modified base (100-year) flood elevations are indicated on the following table and revise the Flood Insurance Rate Map(s) in effect for each listed community prior to this date.

ADDRESSES: The modified base flood elevations for each community are available for inspection at the office of the Chief Executive Officer of each community. The respective addresses are listed in the following table.

FOR FURTHER INFORMATION CONTACT: Michael K. Buckley, P.E., Chief, Hazard Identification Branch, Mitigation Directorate, 500 C Street, SW, Washington, DC 20472, (202) 646–2756.

SUPPLEMENTARY INFORMATION: The Federal Emergency Management Agency makes the final determinations listed below of the final determinations of modified base (100-year) flood elevations for each community listed. These modified elevations have been published in newspapers of local circulation and ninety (90) days have elapsed since that publication. The Associate Director has resolved any appeals resulting from this notification.

The modified base (100-year) flood elevations are not listed for each community in this notice. However, this rule includes the address of the Chief Executive Officer of the community where the modified base (100-year) flood elevations determinations are available for inspection.

The modifications are made pursuant to Section 206 of the Flood Disaster Protection Act of 1973, 42 U.S.C. 4105, and are in accordance with the National Flood Insurance Act of 1968, 42 U.S.C. 4001 et seq., and with 44 CFR Part 65.

For rating purposes, the currently effective community number is shown and must be used for all new policies and renewals.

The modified base (100-year) flood elevations are the basis for the floodplain management measures that the community is required to either adopt or to show evidence of being already in effect in order to qualify or to remain qualified for participation in the National Flood Insurance Program (NFIP).

These modified elevations, together with the floodplain management criteria required by 44 CFR 60.3, are the minimum that are required. They should not be construed to mean that the community must change any existing ordinances that are more stringent in their floodplain management requirements. The community may at any time enact stricter requirements of its own, or pursuant to policies established by other Federal, State, or regional entities.

These modified elevations are used to meet the floodplain management requirements of the NFIP and are also used to calculate the appropriate flood insurance premium rates for new buildings built after these elevations are made final, and for the contents in these buildings.

The changes in base (100-year) flood elevations are in accordance with 44 CFR 65.4.

National Environmental Policy Act

This rule is categorically excluded from the requirements of 44 CFR Part 10, Environmental Consideration. No environmental impact assessment has been prepared.

Regulatory Flexibility Act

The Associate Director, Mitigation Directorate, certifies that this rule is exempt from the requirements of the Regulatory Flexibility Act because modified base (100-year) flood elevations are required by the Flood Disaster Protection Act of 1973, 42 U.S.C. 4105, and are required to maintain community eligibility in the NFIP. No regulatory flexibility analysis has been prepared.

Regulatory Classification

This proposed rule is not a significant regulatory action under the criteria of Section 3(f) of Executive Order 12866 of September 30, 1993, Regulatory Planning and Review, 58 FR 51735.

Executive Order 12612, Federalism

This rule involves no policies that have federalism implications under Executive Order 12612, Federalism, dated October 26, 1987.

Executive Order 12778, Civil Justice Reform

This rule meets the applicable standards of Section 2(b)(2) of Executive Order 12778.

List of Subjects in 44 CFR Part 65

Flood insurance, Floodplains, Reporting and recordkeeping requirements.

Accordingly, 44 CFR Part 65 is amended to read as follows:

PART 65—[AMENDED]

1. The authority citation for Part 65 continues to read as follows:

Authority: 42 U.S.C. 4001 et seq.; Reorganization Plan No. 3 of 1978, 3 CFR, 1978 Comp., p. 329; E.O. 12127, 44 FR 19367, 3 CFR, 1979 Comp., p. 376.

§ 65.4 [Amended]

2. The tables published under the authority of § 65.4 are amended as follows:

State and county	Location	Dates and name of newspaper where notice was published	Chief executive officer of community	Effective date of modification	Community No.
Arkansas: Benton (FEMA Docket No. 7113).	City of Bentonville.	August 5, 1994; August 12, 1994; *Benton County Daily Record*.	The Honorable John W. Fryer, Mayor, City of Bentonville, 117 West Central, Bentonville, Arkansas 72712.	July 15, 1994	050012
Colorado: El Paso FEMA Docket No. 7113).	City of Colorado Springs.	August 4, 1994; August 11, 1994; *Gazette Telegraph*.	The Honorable Robert Isaac Mayor, City of Colorado Springs, P.O.Box 1575, Colorado Springs, Colorado 80901–1575.	July 1, 1994	080060
Colorado: El Paso (FEMA Docket No. 7113).	City of Colorado Springs.	August 11, 1994;August 18, 1994; *Gazette Telegraph*.	The Honorable Robert Isaac, Mayor, City of Colorado Springs, P.O. Box 1575, Colorado Springs, Colorado 80901–1575.	July 22 1994	080060
Colorado: El Paso FEMA Docket No. 7117).	City of Colorado Springs.	September 8, 1994, September 15, 1994, *Gazette Telegraph*.	The Honorable Robert Isaac, Mayor, City of Colroado Springs, P.O. Box 1575, Colorado Springs, Colorado 80901.	August 24, 1994	080060
Colorado: Douglas (FEMA Docket No. 7117).	Unincorporated Areas.	September 14, 1994; September 21, 1994 *Daily News-press*.	Ms. M. Michael Cooke Chairperson, Douglas County Board of Commissioners, 101 Third Street Castle Rock, Colorado 80104.	August 29, 1994	080049
Colorado: El Paso (FEMA Docket No. 7113).	Unincorporated Areas.	August 4, 1994; August 11, 1994; *Gazette Telegraph*.	The Honorable Jeri Howells, Chairperson, El Paso County, Board of Commissioners, 27 East Vermijo, Colorado Springs, Colorado.	July 1, 1994	080059

State and county	Location	Dates and name of newspaper where notice was published	Chief executive officer of community	Effective date of modification	Community No.
Colorado: El Paso (FEMA Docket No. 7117).	Unincorporated Areas.	September 8, 1994; September 15, 1994; *Gazette Telegraph*.	The Honorable Jeri Howells Chairperson, El Paso County, Board of Commissioners, 27 East Vermijo, Colorado Springs, Colorado 80903.	August 24, 1994	080059
Colorado: Douglas (FEMA Docket No. 7117).	Town of Parker.	September 14, 1994; September 21, 1994; *Daily News-Press*.	The Honorable Greg Lopez, Mayor, Town of Parker, 20120 East Main Street, Parker, Colorado 80134.	August 29, 1994	080310
Hawaii: Maui (FEMA Docket No. 7117).	Unicorporated Areas.	September 13, 1994; September 20, 1994; *Maui News*.	The Honorable Linda Crocket Lingle, Mayor, County of Maui, 200 South High Street, Wailuku, Maui, Hawaii 96793.	August 22, 1994	150003
Idaho: Ada (FEMA Docket No. 7113).	Unicorporated Areas.	August 23, 1994; August 30, 1994, *The Idaho Statesman*.	The Honorable Vern Bisterfeldt, Chairman, Ada County Board of Commissioners, 650 Main Street, Boise, Idaho 83702.	August 9, 1994	160001
Idaho: Ada (FEMA Docket No. 7113).	City of Boise ..	August 23, 1994; August 30, 1994, *The Statesman*.	The Honorable Brent Coles, Mayor, City of Boise, P.O. Box 500 Boise, Idaho 83701–0500.	August 9, 1994	160002
Idaho: Ada (FEMA Docket No. 7113).	City of Meridian.	August 11, 1994; August 18, 1994; *Valley News*.	The Honorable Grant P. Kingsford, Mayor, City of Meridian, 33 East Idaho Avenue, Meridian, Idaho 83642.	July 20, 1994	160180
Kansas: Sedgwick (FEMA Docket No. 7113).	Unincorporated Area.	August 2, 1994, August 9, 1994, *Wichita Eagle*.	Ms. Betsy Gwin, Chairperson, Sedgwick County, Board of Commissioners' 320525 North Main street Suite 320, Wichita, Kansas 67203.	July 1, 1994	200321
Nevada: Washoe (FEMA Docket No. 7117).	City of Reno ...	September 6, 1994; September 13, 1994; *Reno Gazette Journal*.	The Honorable Peter Sferrazza, Mayor, City of Reno, P.O. Box 1900, Reno, Nevada 89505.	August 16, 1994	320020
Nevada: Washoe (FEMA Docket No. 7117).	Unicorporated Areas.	September 6, 1994; September 13, 1994 *Reno Gazette Journal*.	The Honorable Diane Cornwall, Chairman, Washoe County, Board of Commissioners, P.O. Box 11130, Reno, Nevada 89520.	August 16, 1994	320019
Oklahoma: Muskogee (FEMA Docket No. 7117).	City of Muskogee.	September 9, 1994; September 16, 1994; *Muskogee Daily Phoenix*.	The Honorable Kathy Hewitt, Mayor, City of Muskogee, P.O. Box 1927, Muskogee, Oklahoma 74402.	August 15, 1994	400125
Oklahoma: Muskogee (FEMA Docket No. 7117).	Unincorporated Areas.	September 9, 1994, September 16, 1994, *Muskogee Daily Phoenix*.	The Honorable Gene Bullard, Chairman, Muskogee County Board of Commissioners, P.O. Box 2307, Muskogee, Oklahoma 74401.	August 15, 1994	400491
Texas: Tarrant: (FEMA Docket No. 7117).	City of Colleyville.	September 8, 1994, September 15, 1994, *Colleyville News and Times*.	The Honorable Cheryl Feigel, Mayor, City of Colleyville, P.O. Box 185, Colleyville, Texas 76034.	August 18, 1994	480590
Texas: El Paso (FEMA Docket No. 7113).	City of El Paso	August 5, 1994; August 12, 1994; *Gazette Telegraph*.	The Honorable Larry Francis, Mayor, City of El Paso, Two Civic Center Plaza, El Paso, Texas 79901–1196.	June 23, 1994	482014
Texas: Dallas (FEMA Docket No. 7113).	City of Farmers Branch.	August 4, 1994; August 11, 1994; *Metrocrest News*.	The Honorable Dave Blair, Mayor, City of Farmers Branch 13000 William Dodson Parkway Farmers Branch, Texas 75234.	July 1, 1994	480174
Texas: Harris (FEMA Docket No. 7113).	Unincorporated Areas.	August 24, 1994; August 31, 1994; *Houston Chronicle*.	The Honorable Jon Lindsay, Harris County Judge, Ninth Floor Courtroom, 1001 Preston Suite 911, Houston, Texas 77002.	August 5, 1994	480287
Texas: Harris (FEMA Docket No. 7117).	Unicorporated Areas.	September 1, 1994; September 8, 1994; *Houston Chronicle*.	The Honorable Jon Lindsay, Harris County Judge, Ninth Floor Courtroom, 1001 Preston, Suite 911, Houston, Texas 77002.	August 15, 1994	480287
Texas: Montgomery (FEMA Docket No. 7113).	Unincorporated Areas.	August 12, 1994; August 19, 1994; *Houston Chronicle*.	The Honorable Alan Sadler, Montgomery County Judge, 301 North Thompson, Suite 210, Conroe, Texas 77301.	August 5, 1994	480483

State and county	Location	Dates and name of newspaper where notice was published	Chief executive officer of community	Effective date of modification	Community No.
Texas: Collin (FEMA Docket No. 7117).	City of Plano ..	September 7, 1994; September 14, 1994; *Dallas Morning News.*	The Honorable James N. Muns, Mayor, City of Plano, P.O. Box 860358, Plano, Texas 75086.	August 5, 1994	480856
Texas: Bell (FEMA Docket No. 7113).	City of Temple	August 5 1994; August 12, 1994; *Temple Daily Telegram.*	The Honorable J.W. Perry, Mayor, City of Temple, P.O. Box 1200, Temple, Texas 76503–1200.	June 15, 1994	480034

(Catalog of Federal Domestic Assistance No. 83.100, ''Flood Insurance.'')

Dated: January 26, 1995.

Richard T. Moore,

Associate Director for Mitigation.

[FR Doc. 95–2593 Filed 2–1–95; 8:45 am]

BILLING CODE 6718–03–P

44 CFR Part 67

Final Flood Elevation Determinations

AGENCY: Federal Emergency Management Agency (FEMA).

ACTION: Final rule.

SUMMARY: Base (100-year) flood elevations and modified base (100-year) flood elevations are made final for the communities listed below. The base (100-year) flood elevations and modified base flood elevations are the basis for the floodplain management measures that each community is required either to adopt or to show evidence of being already in effect in order to qualify or remain qualified for participation in the National Flood Insurance Program (NFIP).

EFFECTIVE DATES: The date of issuance of the Flood Insurance Rate Map (FIRM) showing base flood elevations and modified base flood elevations for each community. This date may be obtained by contacting the office where the FIRM is available for inspection as indicated on the table below.

ADDRESSES: The final base flood elevations for each community are available for inspection at the office of the Chief Executive Officer of each community. The respective addresses are listed in the table below.

FOR FURTHER INFORMATION CONTACT: Michael K. Buckley, P.E., Chief, Hazard Identification Branch, Mitigation Directorate, 500 C Street, SW, Washington, DC 20472, (202) 646–2756.

SUPPLEMENTARY INFORMATION: The Federal Emergency Management Agency makes final determinations listed below of base flood elevations and modified base flood elevations for each community listed. The proposed base flood elevations and proposed modified base flood elevations were published in newspapers of local circulation and an opportunity for the community or individuals to appeal the proposed determinations to or through the community was provided for a period of ninety (90) days. The proposed base flood elevations and proposed modified base flood elevations were also published in the **Federal Register**.

This final rule is issued in accordance with Section 110 of the Flood Disaster Protection Act of 1973, 42 U.S.C. 4104, and 44 CFR Part 67.

FEMA has developed criteria for floodplain management in floodprone areas in accordance with 44 CFR Part 60.

Interested lessees and owners of real property are encouraged to review the proof Flood Insurance Study and FIRM available at the address cited below for each community.

The base flood elevations and modified base flood elevations are made final in the communities listed below. Elevations at selected locations in each community are shown.

National Environmental Policy Act

This rule is categorically excluded from the requirements of 44 CFR Part 10, Environmental Consideration. No environmental impact assessment has been prepared.

Regulatory Flexibility Act

The Associate Director, Mitigation Directorate, certifies that this rule is exempt from the requirements of the Regulatory Flexibility Act because final or modified base flood elevations are required by the Flood Disaster Protection Act of 1973, 42 U.S.C. 4104, and are required to establish and maintain community eligibility in the NFIP. No regulatory flexibility analysis has been prepared.

Regulatory Classification

This proposed rule is not a significant regulatory action under the criteria of Section 3(f) of Executive Order 12866 of September 30, 1993, Regulatory Planning and Review, 58 FR 51735.

Executive Order 12612, Federalism

This rule involves no policies that have federalism implications under Executive Order 12612, Federalism, dated October 26, 1987.

Executive Order 12778, Civil Justice Reform

This rule meets the applicable standards of Section 2(b)(2) of Executive Order 12778.

List of Subjects in 44 CFR Part 67

Administrative practice and procedure, Flood insurance, Reporting and recordkeeping requirements.

Accordingly, 44 CFR Part 67 is amended to read as follows:

PART 67—[AMENDED]

1. The authority citation for Part 67 continues to read as follows:

Authority: 42 U.S.C. 4001 et seq.; Reorganization Plan No. 3 of 1978, 3 CFR, 1978 Comp., p. 329; E.O. 12127, 44 FR 19367, 3 CFR, 1979 Comp., p. 376.

§ 67.11 [Amended]

2. The tables published under the authority of § 67.11 are amended as follows:

Source of flooding and location	#Depth in feet above ground. *Elevation in feet (NGVD)
CALIFORNIA	
San Bernardino County (Unincorporated Areas) (FEMA Docket No. 7108)	
Mojave River:	
Just upstream of the Marine Corps Supply Center Limit ...	*2,031
Just downstream of Atchison, Topeka, and Santa Fe Railroad	*2,107
At the Union Pacific Railroad Crossing	*2,158
Just upstream of Lenwood Road	*2,180
Lenwood Creek:	
At the Atchison, Topeka, and Santa Fe Railroad	*2,234
At Main Street	*2,244
Approximately 5,800 feet upstream of Main Street	*2,290
Horse Canyon Creek:	
Just downstream of Antelope Highway	#1

Source of flooding and location	#Depth in feet above ground. *Elevation in feet (NGVD)
Approximately 1,400 feet north of the intersection of Phelan Road and Sheep Creek Road	#1
Sheep Creek:	
Just downstream of Antelope Highway	#3
Approximately 2,000 feet east of the intersection of Smoke Tree Road and Silver Rock Road	#2
Just upstream of the California Aqueduct at a point approximately 6,000 feet east of Oasis Road	#1
Maps are available for inspection at 385 North Arrowhead Avenue, San Bernardino County, California.	
COLORADO	
Boulder (City), Boulder County (FEMA Docket No. 7108)	
Twomile Canyon Creek:	
220 feet upstream of Edgewood Drive	*5,321
80 feet downstream of Kalmia Avenue	*5,510
At intersection of 13th Street and Hawthorn Avenue	*5,427
520 feet upstream of Lakebriar Drive	*5,635
Wonderland Creek:	
200 feet downstream of 26th Street	*5,370
150 feet upstream of 26th Street	*5,380
680 feet upstream of 26th Street	*5,389
Maps are available for inspection at the Utilities Administrative Office, 1739 Broadway, Suite 306, Boulder, Colorado.	
IOWA	
Dubuque County (Unincorporated Areas) (FEMA Docket No. 7114)	
North Fork Maquoketa River:	
Approximately 1.8 miles downstream of U.S. Highway 151	*810
Approximately 1 mile upstream of Tributary J	*833
Approximately 1.5 miles downstream of Tributary A	*926
At the confluence of Tributary B	*948
Approximately 2.5 miles upstream of State Highway 136	*1,011
North Fork Maquoketa River Tributary:	
Approximately 500 feet upstream of the confluence with North Fork Maquoketa River	*936
Approximately 1.2 miles above the confluence with North Fork Maquoketa River, at an unnamed road	*966
Approximately 1.8 miles upstream of the confluence with North Fork Maquoketa River	*979
Maps are available for inspection at Dubuque County Courthouse, 720 Central Avenue, Dubuque, Iowa.	
Dyersville (City), Delaware and Dubuque Counties (FEMA Docket No. 7114)	
North Fork Maquoketa River:	
Approximately 1,400 feet downstream of U.S. Highway 20	*935
At the confluence of Bear Creek	*937
Just upstream of First Avenue East	*939
At the confluence of Hewitt Creek	*945
Approximately 2,900 feet upstream of the confluence of Hewitt Creek	*947
North Fork Maquoketa River Tributary:	
At the confluence with North Fork Maquoketa River	*936
Approximately 300 feet downstream of State Highway 136	*940
Approximately 1,000 feet upstream of U.S. Highway 20	*950
Approximately 4,900 feet upstream of U.S. Highway 20	*973
Mason City (City), Cerro Gordo County (FEMA Docket No. 7118)	
Willow Creek:	
Approximately 1,200 feet downstream of Chicago Milwaukee St. Paul & Pacific Railroad	*1,085
Approximately 200 feet upstream of East State Street	*1,094
Just upstream of Second Street, SW	*1,110
Approximately 350 feet upstream of North Pierce Avenue	*1,116
Just upstream of Eisenhower Avenue	*1,137
At the west corporate limits, approximately 1,220 feet upstream of U.S. Highway 18	*1,158
Cheslea Creek:	
At the confluence with Willow Creek	*1,116
Just downstream of Willowbrook Drive	*1,121
Approximately 350 feet upstream of 15th Street, SW	*1,135
Approximately 280 feet downstream of 26th Street, SW	*1,146
At the south corporate limits	*1,148
Maps are available for inspection at the Planning Department, City of Mason City, City Hall, 10 First Street, NW, Second Floor, Mason City, Iowa.	
LOUISIANA	
Farmerville (Town), Union Parish (FEMA Docket No. 7108)	
Bayou D'Arbonne Lake Tributary 1:	
At the downstream limit of detailed study	*87
Approximately 2,700 feet downstream of Sterlington Highway	*97
Approximately 1,200 feet downstream of Finley Road	*122
Just downstream of Water Chapel Road	*142
Bayou D'Arbonne Lake Tributary 2:	
Approximately 700 feet downstream of Barron Road	*88
Approximately 800 feet upstream of Barron Road	*100
Maps are available for inspection at Town Hall, Town of Farmerville, 407 South Main Street, Farmerville, Louisiana.	
Leesville (City), Vernon Parish (FEMA Docket No. 7114)	
Bayou Castor:	
Approximately 900 feet south and 1,000 feet east of the intersection of Smart and.	
El Pam Streets, at the Southern Corporate Limits	*225
Approximately 250 feet downstream of Highway 46B	*230
At the confluence of Stream No. 1	*231
Approximately 800 feet upstream of the confluence of Stream No. 1, at the Eastern Corporate Limits	*232
Stream No. 1:	
At the confluence with Bayou Castor	*231
Just upstream of Bellview Boulevard	*236
Approximately 1,300 feet upstream of Bellview Boulevard	*238
Stream No. 2:	
At the confluence with Stream No. 1	*231

Source of flooding and location	#Depth in feet above ground. *Elevation in feet (NGVD)
Just upstream of North First Street	*238
Approximately 1,200 feet upstream of North First Street	*245
Stream No. 3:	
Approximately 1,300 feet upstream of Highway 1212	*224
Approximately 3,500 feet upstream of Highway 1212, at the confluence of an unnamed tributary	*231
Approximately 4,700 feet upstream of Highway 1212, just upstream of an unnamed city street	*237
Approximately 7,800 feet upstream of Highway 1212, and approximately 50 feet downstream of West Texas Street	*253

Maps are available for inspection at City Hall, City of Leesville, 101 West Lee Street, Leesville, Louisiana.

Shreveport (City), Cadd and Bossier Parishes (FEMA Docket No. 7095)

Source of flooding and location	#Depth in feet above ground. *Elevation in feet (NGVD)
Cross Bayou:	
At confluence with Red River	*167
At Old Blanchard Road	*167
Twelve Mile Bayou:	
At confluence with Cross Bayou	*167
At Grimmet Drive	*167
Cross Bayou Lateral:	
At confluence with Cross Bayou	*167
At Abbie Street	*176
At confluence with Sycamore Lateral	*182
Approximately 80 feet upstream of Weinstock Street	*196
McCain Creek:	
At confluence with Twelve Mile Bayou	*167
Approximately 1,300 feet upstream of confluence with Twelve Mile Bayou	*167
Approximately 5,000 feet downstream of Pine Hill Road	*173
At Pine Hill Road	*178
Cooper Road Ditch:	
At confluence with McCain Creek	*167
At confluence with Green Oaks Lateral	*174
At confluence with Audrey Lane Lateral	*187
Green Oaks Lateral:	
At confluence with Cooper Road Ditch	*174
At Pearl Street	*189
Audrey Lane Lateral:	
Just upstream of confluence with Cooper Road Ditch	*187
Approximately 1,400 feet upstream of Fifth Street	*200
Sycamore Lateral:	
At confluence with Cross Bayou Lateral	*182
Just upstream of Weinstock Street	*186
Country Club Lateral:	
At confluence with Cross Lake	*177
At Jewella Street	*189
At San Jacinto Street	*198
Approximately 750 feet upstream of Catherine Street	*212
Ford Park Lateral:	
At confluence with Cross Lake	*177
Approximately 300 feet downstream of Sandra Drive	*186
Approximately 400 feet upstream of intersection of Gorton and Yarbough Roads	*196
Galaxy Lateral:	
At confluence with Cross Lake	*177
Just upstream of Jefferson-Paige Road	*197
Boggy Bayou:	
Approximately 4,500 feet upstream of Southern Pacific Railroad	*168
Approximately 9,000 feet upstream of Southern Pacific Railroad	*170
Approximately 13,500 feet upstream of Southern Pacific Railroad	*172
Green Terrace Lateral:	
At confluence with Boggy Bayou	*168
Just upstream of Green Terrace Road	*188
At Cedar Creek Drive	*224
Gilmer Bayou:	
At confluence with Boggy Bayou	*169
At Texas and Pacific Railroad	*186
At Bumcomb Road	*212
Industrial Park Lateral:	
At confluence with Gilmer Bayou	*171
At confluence with Lincoln Memorial Lateral	*186
Just upstream of Bert Kouns Industrial Loop	*213
Savannah Lateral:	
At confluence with Summer Grove Ditch	*183
At Savannah Drive Ditch	*192
Approximately 150 feet upstream of Mansfield Road	*214
Bayou Pierre:	
Approximately 15,000 feet downstream of Flournoy Lucas Road	*152
At Flournoy Lucas Road	*157
At Gregg Street	*167
At Dalzell Street	*173
St. Vincent Academy Ditch:	
At confluence with Ockley Ditch	*179
Approximately 400 feet upstream of St. Vincent Convent	*187
Sand Beach Bayou:	
At confluence with Bayou Pierre	*153
At confluence with Old River	*160
Just upstream of East 70th Street	*162
South Broadmoor Lateral:	
At confluence with Sand Beach Bayou	*159
At State Highway 1	*159
At Pomeroy Street	*159
Old River:	
At confluence with Sand Beach Bayou	*160
At Bert Kouns Industrial Loop	*162
Approximately 3,500 feet upstream of 70th Street	*164
Pierremont Ditch:	
At confluence with Bayou Pierre	*165
At Gilbert Drive	*165
Just upstream of Creswell Street	*170
Ockley Ditch:	
At confluence with Gilbert Lateral	*168
At Southern Avenue	*179
At Woodrow Street	*192
Just upstream of Southern Pacific Railroad	*209
Gilbert Ditch:	
At confluence with Ockley Ditch	*168
Approximately 1,200 feet upstream of Ratcliffe Street	*171
Betty Virginia Ditch:	
At confluence with Ockley Ditch	*172
Just upstream of Baltimore Avenue	*180
Approximately 500 feet upstream of confluence with Avery Ditch	*199
Avery Ditch:	
At confluence with Betty Virginia Lateral	*197
Approximately 1,000 feet upstream of confluence with Betty Virginia Lateral	*209
Lincoln Memorial Lateral:	
At confluence with Industrial Park Lateral	*186
Just upstream of Flournoy Lucas Road	*214
At West 70th Street	*232
Shirley Francis Lateral:	
At confluence with Industrial Park Lateral	*208
Just upstream of Woolworth Road	*212
Southwood High Lateral:	
At confluence with Gilmer Bayou	*178
Approximately 3,200 feet upstream of confluence with Gilmer Bayou	*187

Source of flooding and location	#Depth in feet above ground. *Elevation in feet (NGVD)
Approximately 6,800 feet upstream of confluence with Gilmer Bayou	*196
Rose Park Lateral:	
At confluence with Country Club Lateral	*180
Just upstream of Sumner Street	*191
Just upstream of Clairborne Street	*206
Bickham Bayou:	
At confluence with Cross Lake	*177
Just upstream of Jefferson-Paige Road	*188
Just upstream of Pines Road	*211
Brush Bayou:	
Approximately 2,800 feet downstream of Flournoy Lucas Road	*163
At confluence with Lynbrook Lateral	*178
Just upstream of 70th Street	*193
Just upstream of Missouri Pacific Railroad	*215
Ranchmoor Lateral:	
At confluence with Brush Bayou	*167
At Linwood Avenue	*168
Approximately 500 feet upstream of Frontage Road	*181
Brookwood Ditch:	
At confluence with Brush Bayou	*172
Just upstream of Acacia Street	*183
Just upstream of Hawthorne Street	*193
Lynbrook Lateral:	
At confluence with Brush Bayou	*178
Just upstream of Lynwood Avenue	*184
Just downstream of St. Vincent Avenue	*189
81st Street Drainage Ditch:	
At confluence with Brush Bayou	*182
Just upstream of St. Vincent Avenue	*200
Approximately 200 feet upstream of the intersection of 75th Street and Southern Avenue	*208
75th Street Drainage Ditch:	
At confluence with Brush Bayou	*182
At Wallace Avenue	*190
Approximately 700 feet upstream of 68th Street	*207
Airport Ditch:	
At confluence with Brush Bayou	*183
Just upstream of West 70th Street	*206
Just upstream of Meriwether Road	*228
Jenkins Acres Lateral:	
At confluence with Airport Ditch	*190
Just upstream of Missouri Pacific Railroad	*197
Approximately 2,300 feet upstream of Missouri Pacific Railroad	*203
Hollywood Ditch:	
At confluence with Airport Ditch	*194
At Mayfield Street	*209
Approximately 2,400 feet upstream of Hollywood Avenue	*217
Murry Lateral:	
At confluence with Hollywood Ditch	*212
Just upstream of Baxter Street	*221
Just upstream of Interstate Highway 20	*240
Cargill Lateral:	
At confluence with Airport Ditch	*194
Just upstream of Wisteria Street	*213
Just upstream of Lotus Lane	*224
Courtesy Lane Lateral:	
At confluence with Brush Bayou	*186
At Courtesy Lane	*202
Approximately 700 feet upstream of Hollywood Street	*210
Werner Park Lateral:	
At confluence with Brush Bayou	*198
At Hollywood Avenue	*207
At Westover Street	*212
Summer Grove Ditch:	
At Williamson Way	*170
Just downstream of Southern Pacific Railroad	*183
Just upstream of Industrial Loop	*210
Lambert Park Lateral:	
At confluence with Summer Grove Ditch	*172
Just upstream of Baird Road	*189
Approximately 350 feet upstream of Urban Dale Road	*200

Maps are available for inspection at the City of Shreveport, Project Engineer's Office, 1234 Texas Avenue, Shreveport, Louisiana.

OKLAHOMA

McClain County (Unincorporated Areas) (FEMA Docket No. 7114)

Source of flooding and location	#Depth in feet above ground. *Elevation in feet (NGVD)
Canadian River:	
At the downstream Limit of Detailed Study located approximately 7,000 feet downstream of the confluence of Walnut Creek	*1,020
Just upstream of U.S. Highway 77	*1,035
Approximately 1,800 feet downstream of Atchison, Topeka, and Santa Fe Railroad	*1,059
Just downstream of Interstate Highway 35	*1,107
Approximately 8,000 feet northeast of Ninth Avenue intersection with unnamed road	*2 (Shallow Flooding Depth)
Canadian River Overflow:	
Just upstream of Atchison, Topeka, and Santa Fe Relief Bridge	*1,057
Just upstream of Atchison, Topeka, and Santa Fe Railroad, on the south side of bridge	*1,062
Walnut Creek:	
Just downstream of Atchison, Topeka, and Santa Fe Railroad	*1,028
At the downstream corporate limits of the City of Purcell	*1,035
At the upstream corporate limits of the City of Purcell	*1,049
At the upstream Limit of Detailed Study located approximately 6,100 feet upstream of Interstate Highway 35	*1,051

Maps are available for inspection at McClain County Clerk's Office, Court House, Second and Washington Streets, Purcell, Oklahoma.

Newcastle (City), McClain County (FEMA Docket No. 7114)

Source of flooding and location	#Depth in feet above ground. *Elevation in feet (NGVD)
Canadian River:	
Just upstream of Interstate Highway 35	*1,107
Approximately 300 feet upstream of confluence with Tributary B of Canadian River	*1,126
Approximately 200 feet downstream of East Kelly Road Extended	*1,137
At confluence of Tributary D of Canadian River	*1,169
At the McClain County-Grady County Boundary	*1,180

Maps are available for inspection at the Department of Planning, City of Newcastle, City Hall, 5 North Main Street, Newcastle, Oklahoma.

Pawnee (City), Pawnee County (FEMA Docket No. 7114)

Source of flooding and location	#Depth in feet above ground. *Elevation in feet (NGVD)
Black Bear Creek:	
Harrison Street	*832
At St. Louis & San Francisco Railroad	*832
At Kansas Street	*835

Source of flooding and location	#Depth in feet above ground. *Elevation in feet (NGVD)
Maps are available for inspection at City Hall, City of Pawnee, 510 Illinois Street, Pawnee, Oklahoma.	
Purcell (City), McClain County (FEMA Docket No. 7108)	
Canadian River:	
Approximately 1,500 feet downstream of U.S. Highway 77	*1,033
Approximately 12,600 feet upstream of U.S. Highway 77	*1,044
Just downstream of Atchison, Topeka, and Santa Fe Railroad	*1,061
Canadian River (Shallow Flooding):	
Approximately 200 feet north of the intersection of Atchison, Topeka, and Santa Fe Railroad and Ninth Avenue extended	#2
Canadian River Overflow:	
Just upstream of Atchison, Topeka, and Santa Fe Railroad Relief Bridge	*1,057
Walnut Creek:	
Approximately 3,400 feet downstream of U.S. Highway 77	*1,034
Just downstream of U.S. Highway 77	*1,038
Approximately 400 feet upstream of Interstate Highway 35	*1,048
Approximately 300 feet downstream of Sunset Drive extended	*1,049
Approximately 4,850 feet upstream of Interstate Highway 35	*1,050
Maps are available for inspection at City Hall, City of Purcell, 230 West Main Street, Purcell, Oklahoma.	
TEXAS	
Cherokee County (Unincorporated Areas) (FEMA Docket No. 7114)	
Keys Creek:	
At Pine Crest Lake	*342
At County Road 1401	*346
Approximately 2,750 feet downstream of U.S. Highway 79	*357
Approximately 800 feet upstream of U.S. Highway 79	*371
At Myrtle Drive	*378
Approximately 1,400 feet upstream of Myrtle Drive	*382
Maps are available for inspection at County Extension Office, 201 Sixth Street, Room 104, Rusk, Texas.	
Cibolo (City), Bexar and Guadalupe Counties (FEMA Docket No. 7114)	
Cibolo Creek:	
Approximately 8,000 feet downstream of Schaefer Road	*664
Just downstream of Schaefer Road	*672
At confluence with Dietz Creek	*686
Maps are available for inspection at City Hall, City of Cibolo, 109 South Main, Cibolo, Texas.	
Mineral Wells (City), Palo Pinto County (FEMA Docket No. 7114)	
Pollard Creek:	
Approximately 3,000 feet downstream of Southwest 22nd Street	*835
Southwest 1st Street	*869
Just upstream of Pollard Creek Dam No. 1–A	*916
Pollard Creek Tributary No.1:	
Confluence with Pollard Creek	*842
At corporate limits	*863
Pollard Creek Tributary No. 2:	
At Park Road	*872
At Northwest 2nd Street	*879
Just upstream of Pollard Creek Dam No. 2	*910
Maps are available for inspection at City Hall, City of Mineral Wells, 211 SW First Avenue, Mineral Wells, Texas.	
UTAH	
Joseph (Town), Sevier County (FEMA Docket No. 7114)	
Indian Creek:	
At the intersection of 3rd Street and A Street	#1
At the intersection of 3rd Street and C Street	#2
At the intersection of 5th Street and D Street	#3
Maps are available for inspection at Town Hall, Town of Joseph, 95 North State Street, Joseph, Utah.	
WASHINGTON	
Cowlitz County (Unincorporated Areas) (FEMA Docket No. 7108)	
Toutle River:	
Approximately 16,600 feet upstream of the confluence with the Cowlitz River	*88
Approximately 25,000 feet upstream of the confluence with the Cowlitz River	*116
Just upstream of Tower Road	*137
Approximately 34,800 feet upstream of the confluence with the Cowlitz River	*146
Maps are available for inspection at Cowlitz County, Department of Building and Planning, 207 Fourth Avenue North, Kelso, Washington.	

(Catalog of Federal Domestic Assistance No. 83.100, ''Flood Insurance.'')

Dated: January 26, 1995.

Richard T. Moore,

Associate Director for Mitigation.

[FR Doc. 95–2590 Filed 2–1–95; 8:45 am]

BILLING CODE 6718–03–P

DEPARTMENT OF TRANSPORTATION

National Highway Traffic Safety Administration

49 CFR Part 571

[Docket No. 85–06; Notice 8]

RIN 2127–AA13

Federal Motor Vehicle Safety Standards; Hydraulic Brake Systems; Passenger Car Brake Systems

AGENCY: National Highway Traffic Safety Administration (NHTSA), Department of Transportation.

ACTION: Final rule.

SUMMARY: This rule establishes a new Federal motor vehicle safety standard, FMVSS No. 135, Passenger Car Brake Systems, and replaces Standard FMVSS No. 105, Hydraulic Brake Systems, as it applies to passenger cars. NHTSA's decision to establish the new standard results from the agency's efforts to harmonize its standards with international standards. The agency has determined that this new standard will achieve the goal of international harmonization while remaining consistent with the statutory mandate to ensure motor vehicle safety.

DATES: *Effective Date:* The amendments made by this rule are effective March 6, 1995. As of this date, manufacturers have the option of complying with either FMVSS No. 105 or with FMVSS No. 135. Compliance with FMVSS No. 135 becomes mandatory on September 1, 2000.

Petitions for Reconsideration: Any petition for reconsideration of this rule must be received by NHTSA no later than March 6, 1995.

ADDRESSES: Petitions for reconsideration should be submitted to: Administrator, National Highway Traffic Safety Administration, 400 Seventh Street SW., Washington, DC 20590.

FOR FURTHER INFORMATION CONTACT: Ms. Terri Droneburg, Office of Vehicle Safety Standards, National Highway Traffic Safety Administration, 400 Seventh Street SW., Washington, DC 20590 (202) 366–6617.

SUPPLEMENTARY INFORMATION:

TABLE OF CONTENTS

I. Background
A. Federal Motor Vehicle Safety Standards
B. European Braking Requirements
C. Harmonizing US and European Braking Requirements
D. Antilock Brake Systems
II. Summary of comments on the 1991 SNPRM (Notice 5)
III. NHTSA Decision
A. Overview
B. Application
C. Definitions
D. Equipment Requirements
1. Lining Wear Indicator
2. ABS Disabling Control Switch
3. Vehicle and Reservoir Labeling
4. Brake System Warning Indicator
E. General Test Conditions
1. Ambient Temperature
2. Road Test Surface
3. Instrumentation
F. Road Test Procedures and Performance Requirements
1. Permissible Wheel Lockup
2. Road Test Sequence
3. Pre-Burnish
4. Burnish
5. Adhesion Utilization
a. General
b. Wheel Lock Sequence Test
c. Torque Wheel Test
6. Cold effectiveness
7. High speed effectiveness
8. System failure
a. Stops with Engine Off
b. Antilock Functional Failure
c. Variable Proportioning Functional Failure
d. Hydraulic Circuit Failure
e. Power Assist Unit Inoperative
9. Parking brake requirements
a. Dynamic
b. Static
10. Fade and Recovery
a. Heating Snubs
b. Hot Performance
c. Recovery Performance
G. Miscellaneous Issues
IV. Regulatory analysis
A. Executive Order 12866 and DOT Regulatory Policies and Procedures
B. Regulatory Flexibility Act
C. Executive Order 12612 (Federalism)
D. Executive Order 12778 (Civil Justice Reform)
E. National Environmental Policy Act

I. Background

A. Federal Motor Vehicle Safety Standards

The National Traffic and Motor Vehicle Safety Act (''the Safety Act''), recently revised and codified ''without substantive change'' at 49 U.S.C. Chapter 301, authorizes the National Highway Traffic Safety Administration (NHTSA) to issue Federal motor vehicle safety standards (FMVSS) to ensure motor vehicle safety. The Safety Act requires that each FMVSS be objective and practicable so that a manufacturer can certify that each of its vehicles meets all applicable standards. Each FMVSS specifies the performance requirements and any necessary test conditions and procedures that NHTSA uses in its periodic tests of motor vehicles and motor vehicle equipment. Each tested vehicle must meet the objective requirements contained within the applicable FMVSS. Under this self-certification system, the government does not subjectively approve or disapprove a type of vehicle or a type of braking system.

B. European Braking Requirements

Unlike the self-certification system used in the United States, the European community has established a ''type approval'' system in which the government approves each type of motor vehicle or item of motor vehicle equipment, based on whether it can meet the safety requirements. For example, the current United Nations Economic Commission for Europe (ECE) braking regulation, Regulation 13 (R13) and its proposed harmonized regulation, R13H, use a calculation method to determine the adhesion utilization of a vehicle as designed. Manufacturers submit their calculations (or the input parameters necessary to make the calculations) to governmental authorities along with a prototype vehicle, and the governments then approve or disapprove the vehicle type based on a review of those calculations and testing of actual vehicles.

C. Harmonizing US and European Braking Regulations

In order to eliminate any unnecessary non-tariff barriers to trade in accordance with the General Agreement on Tariffs and Trade (GATT), the United States has participated in discussions held within the Meeting of Experts on Brakes and Running Gear (GRRF) of the ECE. As a result of these discussions, NHTSA has issued a series of rulemaking notices proposing to establish a new FMVSS, FMVSS No. 135, Passenger Car Brake Systems. Likewise, the GRRF has also developed a proposed new Regulation 13–H, which would be compatible with FMVSS No. 135. Throughout the rulemaking, NHTSA has emphasized that any requirements it adopts must be consistent with the need for safety and the Safety Act. The agency emphasizes that safety cannot be sacrificed in its efforts to harmonize the FMVSS with the ECE regulations.

On May 10, 1985, NHTSA published in the **Federal Register** (50 FR 19744) a notice of proposed rulemaking (NPRM; Docket 85–06, Notice 1) to establish FMVSS No. 135, which would replace FMVSS No. 105 as it applies to passenger cars. On January 14, 1987, NHTSA published in the **Federal Register** (52 FR 1474) a supplemental notice of proposed rulemaking (SNPRM; Docket 85–06, Notice 4), to improve and refine the proposed Standard. On July 3, 1991, NHTSA published in the **Federal Register** (56 FR 30528) a second SNPRM (Docket 85–06, Notice 5) as a result of comments on the SNPRM and vehicle testing by NHTSA.

In these previous notices, NHTSA set out its overall approach to developing the proposed harmonized standard. The agency stated that the new standard would differ from the existing one primarily in containing a revised test procedure based on harmonized international procedures developed during discussions held between NHTSA and GRRF. NHTSA stated its belief that the new FMVSS would ensure the same level of safety for the aspects of performance covered by FMVSS No. 105, while improving safety by addressing some additional safety issues. The agency proposed establishing new adhesion utilization requirements that it believes would ensure stability during braking under all friction conditions.

In this final rule, after considering the public comments on all of the notices, NHTSA has made several minor revisions to the requirements proposed in the July 1991 SNPRM. This document explains the changes incorporated in the final rule and the reasons for the agency's decision.

D. Antilock Brake Systems

One issue that NHTSA considered during the process of developing a harmonized standard was what requirements are appropriate for vehicles equipped with antilock brake systems. While NHTSA was evaluating comments to the July 1991 SNPRM, Congress enacted the Highway Safety Act of 1991, which directs NHTSA to publish an advance notice of proposed rulemaking (ANPRM) to consider the need for additional brake performance

standards for passenger cars, including ABS standards. (59 FR 281, January 4, 1994.) Vehicles included in this evaluation effort are passenger cars, light trucks, and multi-purpose vehicles (MPV's).

Given that NHTSA is reviewing the need for antilock systems separately, the agency has decided not to include requirements addressing ABS performance in this final rule to establish FMVSS No. 135. The previously proposed section on ABS will be reserved until all the issues in the research program have been evaluated. At that time, the agency will consider how best to proceed with requirements applicable to ABS on light vehicles and may initiate a separate rulemaking for that purpose.

II. Summary of Comments on the July 1991 SNPRM (Notice 5)

Over 30 commenters responded to the July 1991 SNPRM. Commenters included vehicle manufacturers, brake manufacturers, international organizations, safety advocacy groups, and individuals. The commenters addressed a wide range of topics, including adhesion utilization, the various effectiveness requirements, equipment requirements such as the failure warning indicators, and test conditions such as the road test surface, lockup conditions, burnish procedures, and the instrumentation.

Advocates for Highway and Auto Safety (Advocates) and the Center for Auto Safety (CAS) generally opposed the supplemental proposal, believing that the proposed FMVSS No. 135 was less stringent than FMVSS No. 105 and the previous harmonization proposals. Advocates and CAS opposed several specific proposals in the 1991 SNPRM, including the increase in certain stopping distances, eliminating automatic brake warning indicators, specifying certain aspects of the new adhesion utilization test, eliminating the pre-burnish test, changing the burnish testing procedure and the fade and recovery sequence, allowing momentary wheel lockup, and introducing peak friction coefficient (PFC) values as a substitute for skid numbers in defining the adequacy of testing surfaces.

In contrast, the former Motor Vehicle Manufacturers Association (MVMA),[1] General Motors (GM), Ford, Chrysler, and manufacturers from Europe and Japan have strongly supported harmonized safety standards in general and a harmonized passenger car brake standard in particular. For instance, GM stated that the payoff for successfully harmonizing brake regulations is significant. When the U.S. and European regulations are commonized, it is most probable that this uniform set of requirements will be recognized and accepted throughout all vehicle importing and exporting countries. This will enable manufacturers to build vehicles with standardized brake systems acceptable throughout the world, thereby providing significant cost savings to vehicle buyers. It continued that harmonization of brake regulations will also represent an important milestone in the ongoing efforts to commonize motor vehicle safety regulations, and thereby dismantle one of the most significant non-tariff barriers to international motor vehicle trade.

Notwithstanding their general support for harmonization, vehicle manufacturers expressed concern about what they perceive as the increased stringency of portions of FMVSS No. 135 in relation to FMVSS No. 105.

III. NHTSA Decision

A. Overview

After reviewing the comments, NHTSA has decided to establish FMVSS No. 135, with respect to hydraulic brake systems on passenger cars. The new standard includes equipment requirements, dynamic road test requirements, system failure requirements, and parking brake requirements, as well as test conditions and procedures related to these requirements. With respect to the equipment requirements, FMVSS No. 135 includes provisions addressing the brake lining wear indicator, an ABS disabling switch, reservoir labeling, and a brake system warning indicator. With respect to the test conditions, FMVSS No. 135 includes provisions addressing the ambient temperature, the road test surface, instrumentation, and the initial brake temperature. With respect to the dynamic road tests, FMVSS No. 135 includes provisions addressing permissible wheel lockup, the test sequence, burnish, the wheel lock sequence test, the torque wheel test, the cold effectiveness test, the high speed effectiveness test, the hot performance test, and the fade and recovery test. FMVSS No. 135 also includes requirements for a static parking brake test and several types of system failure tests, including stops with the engine off, ABS functional failure, proportional valve functional failure, hydraulic circuit failure, and power assist failure.

The following discussion follows the order set forth in the regulatory text for FMVSS No. 135 to facilitate the reader's understanding of the issues.

B. Application

In each previous proposal, NHTSA proposed that FMVSS No. 135 would apply to passenger cars. Kelsey-Hayes asked whether this definition included all purpose vehicles, mini-vans, and light trucks.

NHTSA notes that 49 CFR 571.3 defines passenger car, multipurpose passenger vehicle, and truck. All purpose vehicles and mini-vans ordinarily come within the definition of multipurpose passenger vehicle. At this time, FMVSS No. 135 will apply only to passenger cars and not to multipurpose passenger vehicles or trucks, although application to other types of vehicles may be considered at a later date.

C. Definitions

In the 1991 SNPRM (Notice 5), NHTSA proposed definitions for certain terms, including directly controlled wheel and antilock brake system.

Bendix and Mercedes Benz requested a clarification of the definition of an ABS ''directly controlled wheel.'' Bendix recommended that the definition include a select average or drive shaft sensor control of an axle, which it believed would provide sufficient accuracy to control individual wheel slip, thereby avoiding adhesion utilization testing. GM commented that the definition in the 1991 SNPRM would prohibit a type of ABS control known as ''select low'' that uses a single, centrally located sensor on the rear axle to partially control the systems operation.

Given that NHTSA is considering whether to equip vehicles with ABS in a separate rulemaking, the agency has decided that it is not necessary at this time to define ''directly controlled wheel.'' Accordingly, this term is not included in the definition section of the regulatory text. The agency may revisit this issue if the agency decides to propose requirements for antilock brakes on passenger cars. The agency has included a new definition for ''antilock brake system.''

The GRRF and Fiat requested that the definition of initial brake temperature be based on the temperature of the hottest service brake rather than the average of both brakes on an axle, claiming that there should be little difference in the ''cold'' temperature across each axle.

[1] The MVMA became the American Automobile Manufacturers Association in early 1993. This notice will refer to the group by its former name, MVMA. The membership of the new group is slightly different than that of the MVMA, and to refer to the group by its new name would lead to imprecision in indicating which manufacturers were represented by its comments.

After reviewing the comments, NHTSA has determined that there is no reason to modify the proposed initial brake temperatures. Commenters provided no convincing data or arguments to support their requested changes to initial brake temperatures that have been proposed in the NPRM and the two SNPRMs.

D. Equipment Requirements

1. Lining Wear Indicator

In the 1991 SNPRM (Notice 5), NHTSA proposed that the harmonized standard include requirements to warn the driver about excessive brake wear. Specifically, this warning could be done either by a device that warns a driver that lining replacement is necessary or by a device that provides a visual means of checking brake lining wear from outside the vehicle. The agency believed that this proposal would reduce the likelihood that cars would be driven with excessively worn brake linings.

Advocates recommended that all cars have an in-cab visual or audible alarm, stating that an outside visual check would be ineffective, therefore resulting in many owners being unaware of brake lining deterioration. Advocates further stated that the increasing intervals between maintenance checks required of newer cars means that repair personnel would not have an opportunity to discover brake lining wear before it reaches dangerous levels. Honda commented that, for drum brakes, inspection holes on drums may be insufficient to spot the areas of worst brake wear, and recommended allowing removal of the brake drum.

After reviewing the comments, NHTSA continues to believe that the proposed requirements for warning drivers about excessive brake wear are appropriate. Section S5.1.2 of FMVSS No. 135 requires a manufacturer to warn of worn brake linings in one of two ways: (1) An acoustic or optical device warning the driver at his or her driving position, or (2) a visual means of checking brake lining wear from the outside or underside of the vehicle, using tools or equipment normally supplied with the vehicle. The agency notes that FMVSS No. 105 does not require an in-cab warning indicator. Based on this fact, the agency disagrees with Advocates about the need to mandate an in-cab visual or audible alarm.

NHTSA has decided not to adopt Honda's request to allow the removal of the drum brake to identify the wear status. The agency believes that it has provided appropriate ways to determine excessive brake wear. The agency is concerned that adopting Honda's request might be detrimental to safety.

VW, Fiat, Mercedes Benz, GRRF, and Toyota requested that the agency permit the use of the International Organization for Standardization (ISO) brake symbol, a circle with two arcs outside the circle on opposite sides, for the brake wear indicator in lieu of the proposed words. The commenters stated that symbols are more appropriate for a harmonized standard.

NHTSA has decided to permit use of the ISO symbol as a supplement to the words ''brake wear.'' Nevertheless, the agency believes that it would be inappropriate to allow only the ISO symbol as an alternative to the required words. The agency believes that the symbol's meaning would be unclear or ambiguous to a driver, since in this country they are not generally understood to represent the concept of brake wear.

2. ABS Disabling Control Switch

In the 1991 SNPRM (Notice 5), NHTSA proposed (S5.3.2) to prohibit, for vehicles equipped with ABS, a manual control that would fully or partially disable the ABS. Previous notices did not address an automatic disabling switch. The subject was discussed within GRRF, however, and it was decided that R13H would not allow a disabling switch.

JAMA, and Toyota requested a change in the regulatory text to permit ABS disabling switches for off-road vehicles. The commenters stated this is necessary because ABS tends to lengthen stopping distances in rough, gravelly, or muddy terrain. MVMA, Chrysler and Ford opposed permitting a manual ABS disabling switch, but wanted the agency to allow an intelligent or automatic switch (*i.e.*, one not controlled by the vehicle occupants) to accommodate off-road conditions.

NHTSA has decided not to permit either a manual or an automatic ABS disabling switch. The agency notes that no commenter requested any kind of ABS-disabling switch for passenger cars, which are the subject of this rulemaking. Moreover, Mercedes, MVMA, Ford, and Chrysler stated that passenger cars should not have an ABS disabling switch. While those commenters favoring an ABS disabling switch focused on its use for off-road vehicles, FMVSS No. 135 applies only to passenger cars as defined in § 571.3(b). These definitions preclude including MPV's as passenger cars. The agency therefore believes that there is no reason to permit an ABS-disabling switch under the new standard.

3. Vehicle and Reservoir Labeling

In the 1991 SNPRM (Notice 5), NHTSA proposed requirements for the reservoir label in S5.4.3 and the warning indicators in S5.5.5. The agency tentatively concluded that it would be inappropriate to allow use of ISO symbols with respect to these devices, except that such symbols could be used in addition to the required labeling to enhance clarity. The agency noted that this was consistent with FMVSS No. 101, Controls and Displays and past agency decisions made in response to petitions for inconsequential noncompliance based on the use of ISO symbols in place of words or symbols required by FMVSS No. 101.[2] The agency has denied these petitions in cases where it believed that the symbol's meaning would not be readily apparent to drivers.

VW, Fiat, Mercedes Benz, and Toyota commented that the agency should permit use of the ISO brake symbol in FMVSS No. 135 in lieu of the words ''brake,'' ''park,'' or ''parking brake,'' and in lieu of the words ''ABS'' or ''anti-lock'' for ABS failure. GRRF stated that symbols are more appropriate for international use than words in any single language.

Notice 5 and this final rule (Section S5.5.5(a)) allow the use of ISO symbols in addition to the required labeling for the purpose of clarity. However, the agency has decided not to allow the ISO symbol alone to be used as a substitute for the required words. NHTSA believes that the ISO symbol can be ambiguous to some drivers since the ISO symbol, is not universally understood to represent brakes. The agency notes that the commenters did not provide any data showing that the ISO brake failure warning indicator is clearly understood by drivers in countries in which it is currently in use. Moreover, the meaning of the symbol is not readily apparent from its appearance, in contrast to some symbols, such as the one for horns, whose meaning is understandable on its face.

Fiat and the GRRF requested that S5.4.3 be amended to allow the ISO brake fluid symbol to be used on the brake reservoir instead of DOT fluid designations.

NHTSA has decided not to allow the ISO symbol instead of the DOT brake fluid designations (*e.g.*, DOT 3, DOT 4, and DOT 5). The purpose of this requirement is to inform drivers about what kind of brake fluid to add to their vehicles and to avoid use of an improper fluid. The agency notes that

[2] NHTSA notes that FMVSS No. 101 allows the use of some ISO symbols, but not the ones at issue.

the ISO has no rating equivalent to DOT 5 fluid and does not differentiate between DOT 3 and DOT 4 fluids. Even though the agency has decided not to allow use of the ISO symbol, a manufacturer may use the ISO symbol as a supplement to the required textual words.

4. Brake System Warning Indicators

In the SNPRMs (Notices 4 and 5), NHTSA proposed to require (S5.5.2) brake system malfunction indicators to be activated by either an automatic brake indicator check function or a manual check function. While FMVSS No. 105 currently requires brake indicator lamps to be activated automatically when the vehicle is started, in Europe the check function often requires manual action, such as pressing a button or applying the parking brake.

Advocates and CAS opposed the use of a manual check function to check brake system integrity in lieu of an automatic check function. Advocates argued that the existing requirement for all operating systems to be automatically monitored for the driver when turning the ignition key has been ''one of the great advances in American automobile regulation'' and disagrees that the need for safety will be met by this approach.

After reviewing the available information, NHTSA has decided to permit the manual check function in the final rule, as an alternative to the automatic check function. The agency believes that requiring an automatic check function is not necessary to ensure safety. Moreover, the agency has granted several petitions for inconsequential noncompliance from manufacturers that did not provide an automatic check function. These decisions to grant the petitions are consistent with the agency's current belief that allowing use of a manual brake warning indicator, which is consistent with international harmonization, will not have any corresponding detriment to safety.

BMW recommended that NHTSA modify S5.5.3 which specifies the duration during which an indicator is activated. BMW claimed that some ABS warning indicators can only be detected after a certain minimum wheel speed is achieved. Accordingly, it requested that the antilock failure indicator only be required to activate when a road speed of 10 km/h is achieved.

While NHTSA agrees with BMW that the wheel must be rotating to properly check a wheel sensor, the agency believes that it is important for the check function to be able to be performed while the vehicle is stationary. Given the current state of technology, NHTSA believes that the ABS malfunction warning system can be designed to remember if there had been an ABS sensor failure the last time the vehicle's speed was over the threshold, even after the ignition has been turned off. Accordingly, BMW's request is denied.

VW recommended decreasing the minimum lettering height for the brake warning indicator letters to 2 mm (5/64-inch), claiming that the proposed 3.2 mm (1/8-inch) height is larger than necessary.

NHTSA has decided to retain the minimum letter height, based on its concern that some drivers, especially elderly drivers, would not be able to distinguish letters under 3.2 mm. The agency further notes that the 1/8'' dimension is the same as the dimension currently specified in FMVSS No 105.

Kelsey-Hayes commented that, if a separate indicator is used for ABS failure, rear-only ABS equipped vehicles should use a failure indicator specifying ''Rear Anti-lock.''

NHTSA believes that it would be inappropriate to require the words ''Rear Anti-Lock'' to distinguish a rear wheel ABS from a four wheel ABS. The indicator's purpose is to inform the operator that there is a malfunction with the vehicle's ABS. The driver should be aware, through the owner's manual and/or information provided at the time of the vehicle's purchase, whether it is equipped with a four-wheel or rear-only ABS. However, even though the agency will not require this information, adding the word ''rear'' to the ABS failure warning is not prohibited under the standard.

Kelsey-Hayes stated that both red service brake failure warning indicators ''Brake'' and yellow ''ABS'' malfunction indicators should be activated simultaneously in the case of a service brake failure in cars equipped with separate lights.

NHTSA disagrees with Kelsey-Hayes' recommendation for simultaneous activation of both lights in case of a service brake failure, unless the service brake failure is one that also disables or impairs the operation of the ABS. The two lights signal different types of failures, with different consequences. There can be failures that affect both systems, in which case both indicators would activate. However, automatically activating the ABS indicator in case of any service brake failure would be misleading, and therefore inappropriate.

E. General Test Conditions

1. Ambient Temperature

In S6.1.1 of the 1991 SNPRM, NHTSA proposed that for all tests specified in S7, the ambient temperature be between 0°C (32°F) and 40°C (104°F).

Bendix commented that NHTSA should permit the low adhesion tests to be conducted at temperatures less than 32°F because the ambient temperature provision requires testers either to wet the test surface or artificially make ice.

NHTSA notes that the issue of low temperature testing is moot since Bendix's comment was made with respect to the ABS performance test in proposed S7.3, which the agency has decided not to adopt in today's final rule. Even if this test had been adopted, NHTSA notes that it would be unnecessary to use ice to represent a low PFC. The agency further notes that no other commenter suggested the need to use ice for any test.

2. Road Test Surface

In the 1991 SNPRM, NHTSA proposed that the primary stopping distance tests be performed on a test surface with a PFC of 0.9. This road test surface specification differed from FMVSS No. 105, the NPRM, and the 1987 SNPRM, all of which specified a skid number of 81 to define the road test surface. In response to comments to Notice 4, NHTSA decided to propose a PFC for the test surface. The agency noted that PFC is a more relevant surface adhesion measurement for the non-locked wheel tests required by FMVSS No. 135, since the maximum deceleration attained in a non-locked wheel stop is directly related to PFC, but not skid number.

Fiat, Toyota, and GRRF stated that ECE R13 specifies that the test surface should be ''a road surface affording good adhesion.'' VW requested that the standard provide the option of specifying either a skid number or a PFC.

NHTSA, after reviewing its test data and other available information, continues to believe that a PFC of 0.9 is an appropriate, objective value for the test surface. ECE R13's specification that the road surface should afford ''good adhesion'' is unreasonably subjective and therefore inappropriate for an FMVSS. Such an imprecise test condition would lead to unreasonable variability, thereby causing test results that varied based on the road surface and not the vehicle's actual braking ability. Similarly, it would be inappropriate to allow the optional use of skid numbers, which would result in unnecessary variability, since the same

vehicle might have different test results based on which method was used to define the test surface. As explained in the 1991 SNPRM (Notice 5), PFC is more relevant than skid number for the non-locked wheel tests, since the maximum deceleration that can be attained in a non-locked wheel stop is directly related to PFC, which represents the maximum friction available.

GM and MVMA requested that the agency adopt a dry road PFC of 1.0, since compared with a PFC of 0.9, they believe 1.0 more closely parallels a skid number of 81 specified in FMVSS No. 105. Ford requested that the test surface be specified at 0.95 PFC. GM stated that not raising the PFC to 1.0 would require manufacturers to compensate for the loss of adhesion by equipping vehicles with higher rolling resistance tires, which would adversely affect the fuel economy of GM's car fleet by 1.2 mpg. GM further commented that compared with FMVSS No. 105, a cold effectiveness stopping distance of 70 m on a PFC of 0.9 would significantly increase the requirement's stringency.

Based on industry-government cooperative testing to evaluate the effect of fluctuations of PFC on vehicle stopping performance, NHTSA has determined that a PFC of 0.9 reasonably represents stopping on a dry surface and will not be a significant source of variability in the stopping[3] distance tests. While this testing focused on heavy vehicle stopping performance, the agency believes that the test findings are applicable to passenger cars subject to FMVSS No. 135, since the tests addressed the road surface coefficients of friction. Testing indicates that the expected minor variability of a high coefficient of friction surface appears to have a negligible impact on vehicle stopping distance performance. Variation of the average stopping distances for the six different surfaces was small, with the deviation from the average being only 5 feet. Accordingly, the agency believes that any variability in the stopping performance on a high coefficient of friction surface is more likely due to variation in the vehicle's performance rather than test surface variability.

NHTSA has decided that a test road surface specification of PFC 1.0 would result in practicability problems for the agency. It would have to conduct compliance testing on a surface with a PFC higher than 1.0. Such a surface is difficult to find. The agency also notes that GM conducted an extensive survey of actual road surfaces, which indicated that a PFC of 0.9 is fairly typical.

As explained in detail in NHTSA's decision to require heavy vehicles to be equipped with antilock brake systems, using PFC values to express test surfaces is appropriate even though these values may indicate some fluctuation. Given this fluctuation, the agency has considered whether the fluctuation significantly affects the requirement's objectivity. In an earlier rulemaking about FMVSS No. 208, Occupant Crash Protection, the agency explained that since some variability in any test procedure is inherent, the agency need only be concerned about preventing ''unreasonable'' or ''excessive'' variability to avoid causing manufacturers to ''overdesign'' vehicles to exceed the minimum levels of protection specified by the Federal safety standards. (49 FR 20465, May 14, 1984; 49 FR 28962, July 17, 1984.) With respect to the tests in FMVSS No. 135, variability of the PFC value of the test surface will have a negligible impact on a vehicle's ability to comply with the requirements.

Ford stated that it would be impossible to build a track to exactly a PFC of 0.9, given PFC variability, test tire variability, and changing track surfaces due to aging and weathering.

In evaluating the requirement's practicability, NHTSA has considered possible difficulties with respect to building and maintaining test surfaces with a PFC of 0.9 for the high coefficient stopping tests. (Those interested in building and maintaining a test surface should refer to NHTSA's ''Manual for the Construction and Maintenance of Skid Surfaces,'' (DOT HS 800 814.) Variations in PFC for high coefficient of friction surfaces do not affect stopping distance test results appreciably. After reviewing the comments and available information, NHTSA has concluded that specified test surfaces can be achieved and maintained. As explained above, recent ''Round Robin'' testing related to research about heavy vehicle braking by the agency and others on several test tracks indicates that the test surface specification does not raise practicability or objectivity concerns.

MVMA, GM, and Ford recommended use of a correction factor for stopping distance to account for testing on surfaces with PFCs that differed from those prescribed in the standard. They stated that a manufacturer is fortunate if the tests they conduct are actually carried out on surfaces with the precise PFC as specified in the harmonized standard.

NHTSA believes that it would be inappropriate to specify a stopping distance correction factor, as requested by the comments. The agency notes that the same variables that will apply to manufacturer testing in accordance with FMVSS No. 135 also applied to their testing under FMVSS No. 105, and no correction factor was established or needed at the time. NHTSA further notes that a manufacturer may test its vehicles on whatever surface it likes, and may make any corrections it chooses. The FMVSS specifies requirements with which manufacturers must certify that their vehicles comply on a given surface under specified test conditions. Moreover, the agency will follow the procedures specified in the FMVSS for purposes of compliance testing. If a manufacturer is confident that its testing on a different surface will yield results comparable to agency test results under FMVSS No. 135 (by applying a correction factor), it need not exactly follow every agency specification.

Advocates opposed the proposal to replace skid numbers with PFC. It claimed that PFC numbers cannot be correlated to skid numbers because they do not describe the same event. Advocates further commented that most state highway authorities use skid numbers to evaluate a roadway's skid resistance, and that NHTSA would make it impossible for data comparison by encouraging different authorities to use different measurement standards. In contrast, Fiat, Ford, ITT-Teves, GRRF, OICA, Mercedes, and MVMA stated that using PFC rather than skid numbers will lead to more repeatable road surface adhesion measurements and that PFC directly correlates to vehicle stopping distance.

PFC and skid number can both be measured simultaneously during traction tests. However, the two road surface specifications are used for different purposes. Highway officials use skid numbers to determine when to resurface a road, not to determine test vehicle performance in stopping tests. The agency notes that because FMVSS No. 135 evaluates a vehicle's capability during braking to use the available friction capability at the interface between the tire and road, PFC is the more appropriate measure for that purpose. It is not necessary to establish a correlation between the two numbers, for any given surface.

While ITT-Teves, MVMA, and Ford agreed with the proposed use of the ASTM test tire and test procedure, the GRRF, VW, Mercedes Benz, Fiat, and OICA, stated that the ASTM test methods for determining PFC are not

[3] ''MVMA/NHTSA/SAE Round Robin Brake Test,'' Transportation Research Center of Ohio, Report No. 091194, August 26, 1991.

familiar in Europe. They requested NHTSA to consider other methods of determining adhesion or PFC, but suggested no specific test method or procedure.

NHTSA is aware that the ASTM trailer and test method are not widely used outside of the United States. However, any method of determining PFC specified in the standard must be objective and repeatable. Those commenters that requested consideration of other methods did not provide any evidence that there are other standardized methods in existence that are as objective, repeatable, and universally accepted as the ASTM method that has been specified.

NHTSA also notes that the concerns expressed by several European entities about compliance need not adversely affect them, since the agency does not insist that any manufacturer use a specific test method or procedure. Rather, the individual manufacturer must determine whether to test exactly to the specifications of FMVSS No. 135 or to use its own methods of determining that its braking systems will meet the requirements of the standard. NHTSA, as stated earlier, will use the procedures established in FMVSS No. 135 in its own testing. The agency has decided to specify the ASTM test procedure for all of its compliance tests. The agency emphasizes that GRRF's suggested wording (i.e., ''a surface affording good adhesion'') would be inappropriate for a Federal safety standard since it is not objective. The two specifications are not in conflict with each other, however. Because NHTSA's goal is to define ''good adhesion'' objectively, the agency has decided to specify a surface measured with a standard test method to a specific adhesion level.

Honda recommended that the test condition state ''PFC shall be situated between the slip ratio of 10 to 30 percent and the friction coefficient of the road surface.'' It stated that this slip ratio was appropriate because most roads are within this range. It stated that slip ratios can vary even if PFC value remains constant.

NHTSA believes that slip ratios are not appropriate for defining a pavement surface to be used for stopping distance tests, because the minimum stopping distance is obtained at the maximum traction value, which is defined directly by the PFC. The agency believes that it is most important to provide a surface with the available traction defined so that all vehicles have an equal chance for achieving the shortest stop, regardless of the optimum vehicle slip ratio for each vehicle. For a given PFC, the vehicle slip ratio at which maximum traction is achieved varies depending on the vehicle characteristics. Accordingly, slip ratio cannot be used to define a test surface, because it is vehicle-dependent.

3. Instrumentation

In the 1991 SNPRM (Notice 5), NHTSA specified in S6.4, the instrumentation to measure brake temperature, brake line pressure, and brake torque.

The GRRF, Ford, Fiat, and VW recommended that NHTSA allow alternative methods to measure brake temperature. Ford stated that plug type thermocouples develop problems as brake pad wear occurs and that use of rubbing-type thermocouples would reduce cost and time.

NHTSA notes that a standard must include a specific method to ensure objectivity, so that the requirements are the same for all vehicles. In addition, a specific method ensures uniformity and thus facilitates compliance testing. The specification of plug-type thermocouples is the same as specified in Society of Automotive Engineers' (SAE) Recommended Practices and is identical to that specified in FMVSS No. 105, FMVSS No. 121, and FMVSS No. 122. The agency is not aware of any problems resulting from use of this procedure. NHTSA further notes that while the agency will use plug type thermocouples specified in S6.4.1 for its own testing, a manufacturer may use whatever type of brake temperature measuring device it prefers for its own testing. Nevertheless, NHTSA does not recommend using rubbing-type thermocouples in FMVSS No. 135, based on agency testing that indicates that the two types of thermocouples give different readings for brake temperature.

Bendix recommended that NHTSA specify whether brake linings can be heated up to an initial brake temperature (IBT) before the static parking brake test and that a procedure be specified. The procedure would be important for vehicles with parking systems not utilizing the service friction elements.

NHTSA notes that IBT as defined in S4, and S6.5.6, describes the procedure for establishing IBT, and S7.12.2(a) sets the maximum IBT (no minimum) for the parking brake test regardless of the type of friction elements. The non-service brake friction materials should not be heated because under normal driving circumstances they are never used (heated up) until the parking brake is applied after the vehicle stops. This is not necessarily the case with service brake friction materials. Therefore, it would be unrealistic to describe a heating procedure.

However, the agency has decided to revise section S7.12.2(a) as follows to clarify the requirements on IBT for both service and non-service parking brake friction materials. Specifically, the revised language makes clear that IBT applies to both service and parking brake friction materials.

''7.12.2(a) IBT.

(1) Parking brake systems utilizing service brake friction materials shall be tested with the IBT ≤ 100°C (212°F) and shall have no additional burnishing or artificial heating prior to the start of the parking brake test.

(2) Parking brake systems utilizing non-service brake friction materials shall be tested with the friction materials at ambient temperature at the start of the test. The friction materials shall have no additional burnishing or artificial heating prior to or during the parking brake test.''

F. Road Test Procedures and Performance Requirements

1. Permissible Wheel Lockup

In the 1991 SNPRM (Notice 5), NHTSA proposed to allow wheel lockup of 0.1 seconds or less of any wheel during several road tests. This differed from earlier proposals that prohibited any type of lockup. The agency concluded that, due to pavement irregularities, it would be extremely difficult for a test driver to achieve maximum deceleration without causing momentary lockup of one or more wheels. The agency believed that the brief lockup time permitted would not result in vehicle instability, especially considering that, even ABS controlled brakes occasionally undergo nominal, self-correcting lockup conditions for very short periods of time.

Advocates and CAS opposed permitting any lockup, stating that it may result in vehicle instability. Advocates believed that allowing momentary lockup would result in the sale of more rear-biased vehicles that are susceptible to skidding. Bendix recommended a revised wheel lock criteria to increase the permitted lockup time, stating that it would take longer than 0.1 seconds for a driver to detect and react to wheel lock up. It believed that this would lead to less aggressive driver performance in testing to FMVSS No. 135 specifications, as drivers tried to avoid any type of lockup.

NHTSA has decided to permit a minimal amount of wheel lock up to facilitate vehicle testing. The agency believes that it will not be detrimental to safety as alleged by Advocates.

Allowing momentary wheel lockup during compliance testing will not affect a vehicle's real world ability to lock or not lock its wheels. Rather, this provision merely acknowledges that momentary lockup may inadvertently occur during compliance testing due to road surface irregularities, as test drivers attempt to achieve the shortest stops possible. Therefore, this provision ensures that entire test runs are not invalidated due to such an occasional occurrence.

NHTSA also notes that while Advocates claimed that the proposal to permit momentary lockup during stops represents ''a significant modification of the current FMVSS No. 105 test procedure'' whose real-world safety implications are unknown, FMVSS No. 105 in fact generally permits lockup of one wheel during stopping distance tests. The provision being adopted today thus represents a more stringent test condition, not a less stringent one.

In response to Bendix's comment, the momentary lockup is not a situation that a driver is supposed to detect and respond to; it is simply an allowance for a minor, inadvertent occurrence during testing. Therefore, Bendix's request to permit a longer lockup period is not necessary or appropriate.

Honda and Ford recommended that S7.2.1(f) be changed to define wheel lock as an angular velocity of zero, rather than the current definition of 10 percent of vehicle speed. They reasoned that it would be difficult to read the definite value with a 10 percent margin, because speed recorded on the data sheet changes gradually and the data also includes vehicles vibration.

The wording proposed for S7.2.1(f) was not intended to redefine wheel lockup as 10 percent of vehicle speed (90 percent wheel slip). Rather, it was intended to provide a practical criterion for making a determination that wheel lockup (100 percent wheel slip) exists, given the limitations of current instrumentation and recording devices. The proposal was based on the agency's experience at the Vehicle Research & Test Center (VRTC). Much of the vehicle testing that NHTSA has relied on to formulate FMVSS No. 135 was conducted at VRTC. This testing indicated that, with the instrumentation used by VRTC, it would be difficult to accurately measure zero angular velocity, due to spurious ''signal noise''. Thus, it would be extremely difficult to ascertain when a wheel reached an angular velocity of zero.

The comments expressed by Ford and Honda indicate that they have experienced similar problems with ''signal noise'' due to vibration and ''drift'' of the signal when reading the vehicle speed trace, which make it more difficult to relate the wheel rotational speed measurement to that variable than to read its absolute value. The difference between the agency's experience and that of Ford and Honda is probably due to differences in the instrumentation packages used.

After further reviewing this issue, NHTSA has decided to remove the proposed S7.2.1(f) entirely, because it was probably biased toward a particular type of instrumentation, and the agency does not want to impose unnecessary restrictions on what instrumentation is used to test for compliance with the standard. In order to clarify the meaning of wheel lockup, a definition stating that wheel lockup means 100 percent wheel slip has been added to S4. This definition is the same as has recently been added to both FMVSS No. 105, Hydraulic Brake Systems, and FMVSS No. 121, Air Brake Systems.

As a practical matter, NHTSA notes that there is essentially no difference between the method proposed in Notice 5 and that recommended by Ford and Honda. Once a wheel reaches 90 percent slip, complete lockup will be essentially instantaneous. As clarified in this final rule, there is no question of what is meant by wheel lockup. How that is measured is left to individual testing organizations, as is true for other aspects of standard.

2. Road Test Sequence

In the 1991 SNPRM (Notice 5), NHTSA proposed the following road test sequence: Burnish and wheel lock sequence at gross vehicle weight rating (GVWR); wheel lock sequence, ABS performance, and the torque wheel test at lightly loaded vehicle weight (LLVW); the torque wheel, cold effectiveness, high speed effectiveness, stops with engine off at GVWR; cold effectiveness, high speed effectiveness, failed ABS, failed proportional valve, and hydraulic circuit failure at LLVW; and hydraulic circuit failure, failed ABS, failed proportional valve, power brake unit failure, the static and dynamic parking brake tests, heating snubs, hot performance, brake cooling, recovery performance, and final inspection at GVWR.

JAMA and GRRF supported the proposed road test sequence, even though R13H does not specify a test sequence. GM recommended modifying the test sequence by eliminating two of the four ballast changes (*i.e.*, reduce the times needed to switch between lightly loaded and fully loaded). It also recommended not including the full ABS test and the dynamic parking brake test.

As explained below, NHTSA has decided not to include the full ABS test and the dynamic parking brake test. Nevertheless, the agency believes that it would be inappropriate to change the test sequence for the sake of reducing the test preparation effort. The agency emphasizes that the test sequence being adopted specifies that the GVW and LLVW wheel lock sequence tests be conducted first, since their results determine whether the torque wheel test needs to be conducted. The agency further notes that the test sequence being adopted permits removal of the torque wheels as soon as that test is completed. This is important since the torque wheels might get wet or otherwise adversely affected if they were not removed. Based on these considerations, the agency has determined that it would be inappropriate to switch the test sequence, which would result in fewer ballast changes.

3. Pre-Burnish

FMVSS No. 105 specifies a pre-burnish requirement to evaluate brakes in the brand new condition. In the initial NPRM (Notice 1), NHTSA proposed a similar requirement for the harmonized standard. However, in the 1987 SNPRM (Notice 4), the agency explained that it no longer believed a pre-burnish test was necessary for safety, given the relatively short period of time that the vehicle's brakes remain in the pre-burnished condition.

In comments to both SNPRMs, Advocates and CAS strongly opposed deleting this test. They stated that it takes hundreds of miles of use before brakes are properly burnished, especially for vehicles used in rural areas, in which long distances may be traveled with few brake applications. Advocates stated that certain brakes, most particularly disc-type brakes, are highly resistant to burnishing. That organization argued that the agency acknowledged this high mileage need for proper burnishing in the 1985 NPRM, but attempted to rationalize this concession in the first SNPRM. It also argued that stopping distance performance may be considerably greater before burnish than afterwards.

Advocates stated that deleting a pre-burnish test would allow manufacturers to produce and sell cars whose pre-burnish, on-the-road braking capability is unknown. It stated that it does not believe this is in the best interests of traffic safety, and that it does not believe the agency can allow cars to be sold and used that have no regulatory control

over their stopping distances before burnishing takes place.

NHTSA is not persuaded by the comments from CAS and Advocates regarding the need for a pre-burnish test, and has decided to not include this test in the final rule. The arguments by CAS and Advocates are essentially the same as those made in response to the 1987 SNPRM (Notice 4). These comments were already addressed in the preamble to the 1991 SNPRM (Notice 5, 56 FR 30533).

Advocates has made an unsupported statement that disc brakes are highly resistant to burnishing. No test data or other evidence was supplied to support this allegation. Regardless, the pertinent question is not how long or how many miles it takes to burnish brakes in use, but whether there is a big enough difference in performance before and after the 200-stop burnish specified in the standard to present a safety problem. If some types of brakes do take a long time to become fully burnished, then they would not be fully burnished after the 200-stop burnish sequence specified in the standard, so they would have to meet the cold effectiveness stopping requirements in a partially-burnished state. If that were the case, their eventual, fully-burnished performance would be even better than that required by the standard.

Advocates also argued that stopping distances before burnish may be considerably longer than after burnish. This statement was also unsupported by any test data. Agency testing conducted during the development of this standard (Harmonization of Braking Regulations—Report No. 1, Evaluation of First Proposed Test Procedure for Passenger Cars, Volume 1, May, 1983, DOT HS 806–452) showed that in some cases stopping distances were somewhat shorter after burnish, and in other cases stopping distances were shorter in the unburnished state. However, the overall conclusion was that the burnish had a small effect on stopping distances. Also, this research was done using the burnish procedure specified in FMVSS No. 105, which is more severe than that specified in FMVSS No. 135, and would therefore have a greater effect on braking performance.

4. Burnish

Burnish procedures serve as a conditioning to permit the braking system to achieve its full capability. In the 1987 SNPRM (Notice 4), NHTSA proposed specifying 200 burnish stops. The agency stated that the burnish procedures would stabilize brake performance and reduce vehicle and test variability. In the 1991 SNPRM (Notice 5), the agency proposed almost the same requirements as the earlier SNPRM. The only substantive change from the earlier notice entailed specifying that the pedal force would be adjusted as necessary to maintain the specified constant deceleration rate.

Kelsey-Hayes and Honda recommended that the burnish procedures be made consistent with the ones in FMVSS No. 105, with respect to the number of burnishes, the test speed, and the deceleration rate. Specifically, both commenters recommended that the test speed be 65 km/h (40.4 mph) and the deceleration rate to be 3.5 m/s (11.5 fps). While these conditions enabled Kelsey-Hayes to conduct the FMVSS No. 105 burnish on a secluded public road, the proposed burnish requirements for FMVSS No. 135 would have to be conducted at a commercial test facility, which may not be readily available. Honda stated that the cost of the proposed FMVSS No. 135 burnish test was more than the cost of the FMVSS No. 105 burnish, even though the brake temperatures at the end of the respective burnish procedures are the same. JAMA and Toyota recommended that the test speed be reduced from 80 km/h to 70 km/h because the brake temperature would increase too much under the proposed burnish speed.

NHTSA has decided to adopt the burnish procedure as proposed in the 1987 and 1991 SNPRMs. As explained in those notices, the agency purposely changed the burnish procedure from the one in FMVSS No. 105 to provide a more realistic burnish. NHTSA believes that the new burnish procedure will more closely match real world situations, including the actual type of burnish most drivers will achieve in the course of normal driving. The burnish procedure in the harmonized standard will better reflect the real world capabilities of the brakes in a passenger car. The new burnish procedure itself will not affect the time or mileage needed to burnish brakes for the average driver. NHTSA believes that the burnish procedures adopted by today's final rule represent an efficient burnish procedure that is consistent with R13 and the ECE harmonized version of R13H.

NHTSA is not able to determine the meaning of JAMA's comment that the temperature ''would increase too much'' under the specified burnish procedure. As previously stated, the agency believes that the specified burnish is more representative of actual driving experience. Therefore, any temperature increase during burnish would also be experienced on the road.

Advocates and CAS stated that the burnish procedure proposed for FMVSS No. 135 would not ensure that cars are tested with properly burnished brakes. They stated that decreasing the deceleration rate, lowering the initial brake temperature, and introducing a variable pedal force would extend the time and mileage needed to complete a full burnish. Advocates further believed the proposed burnish procedure would not evaluate how well the brake system reacts to higher temperatures, along with the resulting potential for fade during the initial burnishing.

NHTSA believes that Advocates and CAS misunderstand a fundamental principle of brake burnish procedures: a less severe burnish results in a more severe test. The burnish procedure has no bearing whatsoever on how long it will take a vehicle to achieve full performance in actual use. More specifically, the agency notes that the changes proposed in the 1987 SNPRM (Notice 4) about the burnish procedure (*e.g.,* lower initial brake temperature, lower deceleration rate) would be more similar to typical driving than those in FMVSS No. 105. Moreover, NHTSA believes that most vehicles will not be driven for long periods of time in a significantly less burnished condition than that obtained from the burnish procedures being adopted.

Advocates also said that it does not agree with NHTSA'S claim that drivers rarely exceed a deceleration rate of 3.0 m/s(2) except in emergencies. Advocates claimed that typical stop-and-go braking deceleration rates, especially in congested urban expressway traffic with high speed differentials, can exceed this rate. NHTSA acknowledges that deceleration rates can exceed 3.0 m/s(2), but burnish is meant to simulate typical use, not these unusual circumstances.

MVMA, Ford, Chrysler, and GM requested a modification of initial brake temperature from < 100 °C (212 °F) to ''ambient temperature plus 100 °C.'' They believed that this would normalize the actual amount of brake burnish achieved and thus could reduce the amount of time required to run the burnish.

NHTSA notes that the burnish IBT is set at an upper limit to avoid overheating. Since the friction coefficient of the brake linings varies with the IBT, allowing a ''range of IBT upper limits'' is not an objective test condition.

NHTSA continues to believe that the burnish procedures being adopted in this final rule represents an efficient, representative burnish procedure that is consistent with the GRRF proposal.

Honda requested the agency clarify that the road surface condition specified

in S6.2 not apply to S7.1.3(j) (*i.e.*, that the road surface with a PFC of 0.9 not apply to burnish procedures).

NHTSA agrees with Honda that this provision needs to be clarified since burnish is merely a conditioning procedure for brakes and does not actually test for a specified stopping distance on a road of a particular adhesion quality. The PFC of the road surface has no effect on the burnish. Accordingly, S7.1.3 is modified to include a sentence stating that ''The road test surface conditions specified in S6.2 do not apply to the burnish procedure.''

5. Adhesion Utilization

a. General. In the NPRM (Notice 1) and both SNPRMs (Notices 4 and 5), NHTSA proposed adhesion utilization requirements to ensure that a vehicle's brake system is able to utilize the available adhesion at the tire-road interface to ensure stable stops within a specified distance. Adhesion utilization is addressed to some extent by FMVSS No. 105's (and the proposed standard's) service brake effectiveness requirements, since stops must be made within specified distances without leaving a lane of specified width. Under both standards, however, all of those stops are made on a high friction surface. The existing standard does not include any requirements concerning stops made on lower friction surfaces, such as wet roads. Therefore, unlike most of the proposed requirements for FMVSS No. 135, the adhesion utilization requirements do not have any corresponding requirement in FMVSS No. 105.

NHTSA notes that the proposed adhesion utilization requirements evolved considerably over the course of the NPRM and two SNPRM's. Persons interested in the reasons for that evolution, leading up to the proposal set forth in the 1991 SNPRM, are referred to those three notices.

In the 1991 SNPRM, NHTSA proposed a two-step procedure for assessing adhesion utilization based on a determination of the vehicle's brake balance: a wheel lock sequence test and then, for those vehicles that did not pass the wheel lock sequence test, a torque wheel test. The purpose of the wheel lock sequence test is to identify those vehicles that are heavily front biased, since such vehicles would be considered to have inherently good stability characteristics. The purpose of the torque wheel test is to evaluate more precisely those vehicles that fail the wheel lock sequence test, since torque wheels directly measure braking forces. The agency believed that this approach, which is based on a suggestion from the Organization Internationale des Constructeurs d'Automobiles (OICA), would accommodate vehicles that are heavily front biased in their brake balance and those that are closer to neutral balance. The agency believed that this proposal would ensure an appropriate level of safety as well as facilitate harmonization since GRRF agreed to adopt this approach as part of its harmonized adhesion utilization procedures.

CAS opposed the adhesion utilization tests proposed in the 1991 SNPRM. It requested that the agency specify other methods of adhesion utilization to produce objective results for all passenger cars. CAS was concerned that vehicles that marginally pass the wheel lock sequence test would undergo no further testing of front-to-rear brake balance. Instead of the proposed adhesion utilization tests, CAS suggested the use of Hunter Manufacturing's low-speed plate brake tester.

NHTSA believes that the adhesion utilization tests being adopted in today's final rule provide the most practicable and appropriate methods to evaluate a vehicle's adhesion utilization. The wheel lock sequence test screens out vehicles with front bias, which have inherently superior stability.[4] CAS appears to misunderstand the agency's regulatory framework, since a vehicle either passes or fails a requirement in a FMVSS; there is no provision for a marginal pass. For instance, a vehicle that ''marginally passes'' FMVSS No. 105 still complies with the standard. Therefore, the agency believes CAS's argument is not relevant to the regulatory framework set forth by statute and incorporated in the Federal motor vehicle safety standards. The agency further notes that the Hunter test apparatus is a simplified version of the road transducer pad that the NHTSA in light of comments by the industry considered prior to selecting torque wheels as the most acceptable method of measuring adhesion utilization. Therefore, the agency believes that it would be inappropriate to require this method of evaluating compliance.

Advocates stated that the real-world effects of the adhesion utilization test are uncertain and that NHTSA has not demonstrated a connection between real-world situations and the wheel lock sequence results. Advocates further commented that there is more to braking stability than front-axle bias and that plow-out skids will result in lane departures and stopping distances that are too long for safety purposes, even for vehicles with front axle bias and ABS.

Advocates further stated that

> Real-world crash results for cars tested under the two-part Adhesion Utilization protocol may not be favorable for significant numbers of production cars. The truncation of the testing protocol that has accompanied the proposed two-stage system of the current SNPRM comprising the Wheel-lock Sequence and Torque Wheel (especially due to adoption of the 90% efficiency rationale) creates a ''window'' of allowable production variability that can permit a significant, but unquantifiable, percentage of assembly-line vehicles to be rear-brake biased. Under certain operating conditions, especially those uncontrolled by the reduced performance specifications of the current proposed rule, such as the elimination of a low-coefficient surface test, many cars may experience serious instability under severe braking. The plain fact is that even if both parts of the two-stage test as proposed are used for a given car model, this still will not ensure that all cars will have appropriate front-brake bias and does not foreswear the potential for an unknown number of production units to be susceptible of serious spin-out crashes in panic braking situations. Despite advocating the two-stage test in this SNPRM, the agency itself obviously still harbors doubts over its adequacy to detect cars with rear-brake bias.

Advocates has expressed two concerns. Their first concern is that, by having a simple wheel lock sequence test, manufacturers would produce cars that have too much front axle bias in their brake systems, because such a vehicle would always pass the wheel lock sequence test. The extreme example of this would be a car with no brakes at all on the rear wheels. Such a vehicle would always be dynamically stable, but if braked to the point of wheel lockup would provide no ability to steer. This concern by Advocates ignores the adhesion utilization requirement is only one of many requirements in the standard, and therefore is not the sole factor in determining brake system design. If a manufacturer were to produce a car with too much front bias, it would compromise the vehicle's ability to satisfy other requirements of the standard, such as service brake stopping distances, partial failure, failed power assist, and parking brake requirements.

Advocates' second concern is that, because of the 10% allowance for test variability, a vehicle could pass the torque wheel test and still be rear-biased, and therefore ''susceptible of serious spin-out crashes.'' While it is theoretically possible for a vehicle to be slightly rear-biased and still pass the torque wheel test, NHTSA believes this

[4] A heavily front biased vehicle will skid but remain stable heading forward, since the front wheels will lock first. In contrast, a rear biased vehicle will spin out, since the rear wheels will lock first and those wheels would tend to lead.

possibility is extremely remote. If a manufacturer were to design a vehicle to exhibit slight rear bias, production and test variability would create too great a risk that the vehicle would not comply with either the wheel lock sequence test or the torque wheel test. Rather, the 10% allowance is meant to allow cars to be designed with brake balance that is still front-biased, but closer to ideal than could be achieved if the manufacturer had to worry about a failure of the torque wheel test due to test variability. Also, for a vehicle to exhibit a tendency to spin out, it must experience a condition where the rear wheels are locked and the front wheels are not. Any vehicle falling in the 10% ''window'' would be so close to ideally balanced that the point of wheel lockup would be essentially simultaneous for both axles, and a condition of rear axle lockup without front axle lockup would be almost impossible to maintain.

b. Wheel Lock Sequence Test. NHTSA explained its tentative determination in the SNPRM (Notice 5) that the wheel lock sequence test would identify those vehicles that are heavily front biased. Such vehicles have good stability characteristics because their front brakes always lock first during braking, regardless of test surface. Accordingly, a heavily front biased vehicle would not need to be subject to the torque wheel test, since it would be considered to have inherently good stability characteristics. Under the proposal, a vehicle would need to meet the wheel lock sequence test requirements on all test surfaces that would result in a braking ratio of between 0.15 and 0.80, inclusive, at each of two vehicle loading conditions: GVWR and LLVW.[5] The wheel lock sequence test would require a brake application at a linear, increasing rate such that lockup of the first axle is achieved between 0.5 and 1.0 second.

GRRF agreed to the proposed wheel lock sequence test and planned to add it to R13 and R13H. Ford and Chrysler stated that there were insufficient data to establish whether the wheel lock sequence test could be consistently repeated. Ford believed that there is potential for discrepancies between manufacturer testing and NHTSA testing.

NHTSA believes that Ford and Chrysler are incorrect in their assessment of the wheel lock sequence test. The agency notes that the available test data indicate that the wheel lock sequence test is objective and can be consistently repeated.[6] As explained above, the wheel lock sequence test is the first part of the adhesion utilization test procedure, and evaluates whether there is sufficient front axle bias to ensure stability in a lock up situation. If a car has insufficient front axle bias to consistently meet the wheel lock sequence test, it does not automatically fail to comply with FMVSS No. 135. Rather, it would be tested under the torque wheel method. If the vehicle passes the torque wheel test, the wheel lock sequence test results are irrelevant.

NHTSA expects that 90 to 95 percent of cars will pass the wheel lock sequence test, meaning only 5 to 10 percent of the cars will have to be tested with the torque wheel method. This will reduce potential testing expenses by a greater amount than the agency could have foreseen at the time it published the 1991 SNPRM.[7]

Ford requested that the agency specify a braking ratio of 0.15 to 0.70 instead of the proposed ratio of 0.15 to 0.80. It believed that this change would help avoid degradation and flat spotting of tires, since under its recommended ratios only wet surfaces would be required.

NHTSA has determined that it would be inappropriate to lower the upper limit in the braking ratios. If Ford's recommendation were adopted, there would be no assurance of stability on typical dry road surfaces. Therefore, the agency has decided to require the wheel lock sequence test be performed at any ratio between 0.15 to 0.80.

More generally, NHTSA has considered whether the range of possible test surfaces for the wheel lock sequence test raises practicability concerns. The agency notes that a manufacturer will not need to test a vehicle on every possible surface but could instead make predictions based on testing at several points and brake design characteristics. Moreover, instead of using the wheel lock sequence test to screen out vehicles, a manufacturer could conduct only the torque wheel tests, which do not involve a wide range of test surfaces, if a manufacturer doubted that its vehicle could pass the wheel lock sequence test on all applicable test surfaces. Given the availability of the torque wheel test, NHTSA believes that there are no practicability concerns presented by the wide range of test surfaces in the wheel lock sequence test.

Bendix requested that NHTSA clarify whether the definition of wheel lock in S7.2.1(f) is applicable to all testing situations or just those in S7.2. After reviewing this comment, NHTSA has modified the description of wheel lock in S7.2.1(f) to clarify that it only applies for purposes of the adhesion utilization test.

MVMA and Ford noted that the proposed wheel lock sequence test permits wheel lockups of ''less than 0.1 second;'' however, the balance of the SNPRM permits lockup ''for not longer than 0.1 second.'' The agency has decided to standardize this factor so all references to wheel lockup will read -'' ≤ 0.1 second.''

MVMA, Chrysler, Ford, Toyota, and the Japanese Automobile Manufacturers Association (JAMA) commented that it would be difficult to comply with the proposed test condition for lockup to be achieved between 0.5 and 1.0 seconds after initial brake application. Several commenters suggested an upper limit of 1.5 seconds, which they believed would still preclude spike stops. Ford suggested that the requirement specify no maximum time, provided the vehicle's speed was greater than 15 kilometers per second (km/s) at the time lock up occurred.

After reviewing the available information including agency testing, NHTSA has determined that it is appropriate to raise the ceiling to 1.5 seconds. The agency has decided not to remove the ceiling altogether, given the need to have a specification that is independent of the actual pedal force rate since the pedal force rate required to achieve lock up within a specified time will vary among vehicles.

Suzuki, Toyota, and JAMA recommended that S7.2.3(c)(3) be amended to allow braking force to be terminated 0.1 seconds after the first axle locks or when the front axle locks. Suzuki stated that there is no need to require continued braking beyond the first axle lock, since the test is designed to determine which axle locks first. Toyota and JAMA stated that if the rear axle locks first, then the pedal must be immediately released to prevent accidents.

After reviewing the comments, NHTSA has decided to modify S7.2.3(c)(3) to state the following: ''The pedal is released when the second axle

[5] This is defined in Section S4 as the unloaded vehicle weight plus the weight of a mass of 180 kg, including driver and instrumentation.

[6] ''Harmonization of Braking Regulations, Report Number 7, Testing to Evaluate Wheel Lock Sequence and Torque Transducer Procedures,'' DOT HS 807611, February 1990.

[7] When the 1991 SNPRM was published, the percentage of cars that may have been required to be torque wheel tested was already small, given that the agency expected that 95 percent of all cars would pass the wheel lock sequence test. Thus, only five percent of all cars were expected to be torque wheel tested. As a result of the increased use of antilock brake systems that do not need to be torque wheel tested, the agency anticipates that in model year 1999, the number of cars that might need torque wheel testing will be less than one percent.

locks, or when the pedal force reaches 1000 N (225 lbs), or 0.1 seconds after first axle lockup, whichever occurs first.'' This modification of the language should avoid the problems cited by the commenters.

BMW requested that the wheel lock sequence test be run at speeds of 50 km/h, claiming that the conditions proposed in the 1991 SNPRM demand a higher initial speed and brake pedal application rate than the OICA proposal. NHTSA believes that the proposed test speed of 65 km is appropriate for safety and consistent with ECE R13H. BMW neither raised a safety concern nor provided any documentation to support its request to lower the test speed. Accordingly, the test speed for the wheel lock sequence test is adopted as proposed.

Ford, Chrysler, and MVMA requested deleting the speed channel filtering test condition or clarifying it so that it applies only to analog instrumentation methods. They stated that a low pass filter, having a low cut-off frequency is applicable to analog data recording but not digital data recording.

NHTSA has decided to clarify S7.2.3(g) and (h) so that it refers only to analog instrumentation. These sections address the automatic recording of data and speed channel filtration and are unnecessary for digital data recording.

In the 1991 SNPRM (Notice 5), NHTSA proposed a modified wheel lock sequence test for a vehicle equipped with an antilock brake system on one or both axles. Under this proposal, an ABS equipped vehicle would have to be capable of stopping on a surface with a transition from a high PFC to a low PFC without wheel lockup exceeding 0.1 seconds, after decelerating in a hard braking from 100 km/g to a stop. The agency believed that this would test the ABS's ability to compensate for changes in surface quality and conditions encountered in everyday driving. The agency requested comment about the need to adopt other aspects of Annex 13 addressing braking efficiency and split coefficient of friction surfaces, as more advanced ABS are sold in the United States.

MVMA and Ford requested that vehicles with axles not directly controlled by ABS be allowed to be certified as complying with the wheel lock sequence test. They incorrectly stated that while the 1991 SNPRM only applied the wheel lock sequence test to non-ABS vehicles, a vehicle with rear wheel only ABS should also be permitted to demonstrate brake balance by the wheel lock sequence test. They stated that the use of the wheel lock sequence test is unrelated to whether the vehicle is equipped with ABS and should be allowed for either design as an alternative to the torque wheel test.

After reviewing the comments, NHTSA has decided that only vehicles without any ABS should be required to run the wheel lock sequence test. The agency notes that differentiating between all-wheel and rear-wheel ABS as it relates to brake balance is not appropriate since in either case rear wheel lockup will not occur if the ABS is operational.

c. Torque Wheel Test. Under the 1991 SNPRM (Notice 5), a vehicle that failed any single test run of the wheel lock sequence test would be subjected to the torque wheel[8] test to directly measure braking forces under a wide range of deceleration conditions and provide data needed to generate detailed adhesion utilization calculations. Under the proposal, to pass the torque wheel test, a vehicle would need to demonstrate that the plots of its adhesion utilization performance fell within a specified range. Section S7.4.3 sets forth the test conditions for the torque wheel procedure, including initial brake temperature, test speed, pedal force, cooling, number of test runs, test surface, and the data to be recorded.

NHTSA tentatively concluded that the torque wheel test represented an objective and repeatable method for gathering data for the construction of adhesion utilization curves. The agency noted that the torque wheel procedure requires more expensive test equipment and more time to administer than the wheel lock sequence test.

After reviewing the available information, NHTSA has decided to modify the section on torque wheel testing in S7.4 to exclude from testing any car equipped with ABS. The agency has determined that adhesion utilization testing is only relevant for brake balance in the event of lock up, which will either not occur, or occur for negligible amounts of time, on wheels controlled by ABS. Assuming the ABS is operating, this is true for vehicles in which all wheels are directly controlled by ABS, or on rear wheel-only ABS vehicles. In rear wheel-only ABS vehicles, the front wheels would always lock before the rear wheels, which would not lock at all, or lock for negligible amounts of time. Accordingly, the number of cars that will have to undergo adhesion utilization testing will drop to a small percentage of the overall fleet as ABS becomes more prevalent over the next few years.[9]

GM, Ford, MVMA, and Chrysler requested that S7.4.3 be changed to require stops from 50 km/h at both GVWR and LLVW, in addition to the proposal for stops from 100 km/h. They stated that the additional test runs would increase the database's statistical accuracy and provide stopping data at the speed at which the wheel lock sequence test is conducted. They state that specifying an additional test speed will reduce the standard error in the estimate by 30 percent. In addition, GM stated that by specifying two test speeds, a manufacturer would no longer be able to design speed sensitive brake systems specifically designed to handle stops from 100 km/h. Similarly, Ford commented that alternating between the test speeds would avoid speed conditioning of the brakes.

After reviewing the comments and other available information, NHTSA has decided to modify S7.4.3 to require five stops from 100 km/h, and five stops from 50 km/h, at each of the test weights, LLVW and GVW, for a total of 20 stops. The agency agrees with the commenters that stops from both speeds will prevent speed conditioning and ensure that manufacturers design brakes that will be effective over a wide range of initial speeds. NHTSA has decided to increase the maximum pedal force rate to 200 N/second (45.0 lbs./sec.) for the stops from 50 km/h in order to achieve sufficient deceleration levels.

Ford stated that the paired torque and force values generated for S7.4.4 may not be uniformly distributed when plotted against each other, a situation that may affect the overall outcome. Ford stated that data point distribution will not be uniform if the pedal force and the vehicle deceleration are not changing linearly. It recommended using a linear regression analysis after dividing the input force into several increments and averaging all data points within the respective increments to yield a single average value for that increment.

NHTSA has determined that the modification recommended by Ford is not necessary. The agency believes that there will be no ''constant pedal force'' increments at all, if the rates of pedal force application are held within the limits prescribed in S7.4.3(c). The agency notes that in evaluating this phenomenon in the context of worst case scenarios, VRTC determined that

[8] Torque wheels are strain gauge instrumented devices that fit between the brake rotor or drum and the wheel assembly, and which directly measure the reaction torque that is developed by the friction between the tire and road surface during braking.

[9] The agency estimates that by model year 1999, when FMVSS No. 135 will come into full force, approximately 85–90 percent of passenger cars will be ABS-equipped.

there was no significant change in the results.[10]

Ford and MVMA commented that the test condition in S7.4.3(i), which specifies 20 to 25 snubs from 50 km/h at each of the two loading conditions, is excessive. They state that one or two stops from each loading condition would be sufficient for determining variable proportioning valve (VPV) performance. Alternatively, Ford and MVMA stated that the digital data obtained for each of the torque wheel test stops would provide another source of data for determining variable proportioning valve performance. They requested that if the agency decides to require 20 to 25 snubs, then the snubs be performed at the end of the test sequence to avoid any non-repeatable conditioning of the brake lining.

NHTSA has determined that 20 to 25 snubs to determine the variable proportioning valve performance may be unnecessary, but that the suggested 1 to 2 stops would be inadequate to cover the entire range of brake pressures. The agency has decided to modify S7.4.3(i) to specify 15 snubs. The agency believes that this test procedure will be sufficient to appropriately evaluate variable proportioning valve performance without introducing unnecessary conditioning of brake linings. The agency notes that these extra snubs are only needed when the vehicle is equipped with a variable proportioning valve. With fixed proportioning, the test is a static test, which will have no effect on conditioning of the brake linings.

Ford stated that the linear regression data should only include torque data collected when the vehicle deceleration is within the range of 0.15g to 0.80g rather than when torque output values are > 34 N/minute.

NHTSA agrees with Ford's comment and has modified S7.4.4(b) to reflect this change. The agency believes that it would be inappropriate to use data compiled outside the required performance range of the torque wheel test, since such data may not be relevant to the actual performance requirements.

GRRF, GM, Ford, the MVMA, Suzuki, JAMA, Toyota, Honda, and OICA commented that the upper limit line in Figure 2 in S7.4.4(h) (represented in S7.4.5.1 by the equation $z = 0.1 + 0.7 (k - 0.2)$) is unnecessary and should be eliminated. Ford and GM stated that the line is unnecessary because, even though the wheel lock sequence test has no check for excessive front bias, the cold effectiveness test does. Suzuki, JAMA, Toyota, and OICA stated that the adhesion utilization requirement in S7.4.5.2 for a rear axle is more stringent than the requirement than S7.4.5.1, making S7.4.5.1 redundant.

NHTSA agrees with the commenters that a vehicle that is so front-biased that it would not satisfy the efficiency requirement proposed in Notice 5 would in all probability not be able to meet the cold effectiveness and/or other stopping performance requirements in the standard. Therefore, the efficiency requirement proposed in S7.4.5.1 of Notice 5 is essentially redundant. Accordingly, the agency has decided not to include the upper line in Figure 2. In addition to deleting the area of Figure 2 defined by the equation $z = 0.1 + 0.7 (k - 0.2)$, NHTSA is modifying S7.4.5 by deleting the text of S7.4.5 and S7.4.5.1, and renumbering S7.4.5.2 as S7.4.5.

Chrysler recommended using deep dish wheels and changing tires on the torque wheels, claiming that use of torque wheels will deform normal road wheels by pushing them further out than their normal position. Ford and MVMA requested that the agency modify the requirement to permit use of a separate set of tires in the torque wheel test, based on its concern that lockup situations in other tests under FMVSS No. 135 could flatten or wear spots on tires.

NHTSA has decided to permit manufacturers to use a separate set of tires for the torque wheel test, even though the agency believes that it is unlikely that the tires will be worn down prior to the adhesion utilization test which comes at the beginning of FMVSS No. 135's test sequence. The agency notes that new tires will not alter the adhesion utilization curve for the vehicle. The agency agrees with Chrysler that manufacturers using deep dish rims can avoid tire demounting and thus simplify testing, if they can use such rims with tires already mounted. Based on these considerations, the agency has modified S7.4.2(d) to permit optional use of a separate set of tires for the torque wheel test.

Suzuki commented that for purposes of the torque wheel test, the definition of LLVW should be changed to unloaded weight plus 200 kg, rather than the present 180 kg. It stated that 180 kg may be insufficient to cover the total weight of the driver and required instrumentation.

NHTSA believes that most instrumentation packages fall within the 180 kg specified in the Standard. Moreover, the agency is not aware of any instrumentation packages that exceed the weight allowed for LLVW testing. Based on these considerations, the agency has decided not to change S7.4.2.

Hunter, a manufacturer of a brake balance tester, stated that its device can provide results similar to a road transducer pad. It further stated that its device can be used without the need to modify the vehicle.

NHTSA is aware of Hunter's brake balance tester, which is a simplified version of the road transducer pad. While the Hunter device can provide a rough measure of adhesion utilization, NHTSA believes that the methods of measuring adhesion utilization adopted by the agency are superior to the Hunter device, since the torque wheels evaluate adhesion utilization more precisely. The agency notes that the automotive industry and foreign governments interested in harmonization have stated that the proposed methods of measuring AU are appropriate.

In the 1991 SNPRM, the agency stated that assuming one torque wheel equipment package will service the needs for five years of typical yearly production runs of 30,000 to 100,000 vehicles, the torque wheel would result in a unit cost increase of $0.15 to $0.50 per vehicle.

Kelsey-Hayes stated that NHTSA underestimated the expense of torque wheel equipment. It stated that the agency's discussion of the economic burden associated with the cost of one set of torque wheels over a test run is misleading and incomplete, since numerous sets of torque wheel instrumentation will be required.

NHTSA believes that its estimates in the 1991 SNPRM were reasonably accurate, with the following minor modifications. The agency expects that the cost for a set of four torque wheels (including adapters to accommodate varying wheel mounting bolt patterns) to be approximately $40,000 and $15,000 for the on-board digital data acquisition system that will record the testing results. The equipment should last five production years, which correlates to an annual expense of $11,000 per year. This figure is further reduced when amortized on a per vehicle basis. The agency estimates that direct labor costs for each test to be approximately $50 (including costs for instrumentation technicians, and drivers). The agency estimates that the marginal cost increase per car attributed to the torque wheel test will be between $0.10 and $0.16, depending on the size of the vehicle's production run and the number of vehicles in the run that the manufacturer wants to test, since the manufacturer need not test every vehicle in a vehicle run. The agency

[10] "Harmonization of Braking Regulations, Report Number 7, Testing to Evaluate Wheel Lock Sequence and Torque Transducer Procedures," DOT HS 807611, February 1990.

further notes that less than 1.0 percent of vehicles will actually have to undergo the test by model year 1999, given that most vehicles will be equipped with antilock systems and even most of those non-ABS equipped vehicles will pass the wheel lock sequence test. Based on the above considerations, NHTSA has concluded that the expense and time required to administer the torque wheel test will not pose an unreasonable burden on manufacturers.

The agency notes that torque wheels have been in use at least for the last 50 years for evaluating vehicle characteristics other than adhesion utilization. Most of the major vehicle manufacturers already have torque wheels and use them extensively. Therefore, the cost of torque wheels for FMVSS No. 135 needs to be amortized over more than just its use in evaluating adhesion utilization.

No costs associated with the test surface are expected for torque wheel testing because a high coefficient of friction test surface is already required for testing under the existing standard. No costs are expected for the wheel lock sequence test because, if enough surfaces are not already available to potential users, they could use the torque wheel test, given that it would be cheaper to use than constructing and maintaining new test surfaces. In other words, costs associated with the wheel lock sequence test might be so high that manufacturers would go directly to the torque wheel test to incur lesser costs.

6. Cold Effectiveness

The cold effectiveness test evaluates the ability of a vehicle's brake system to bring a vehicle to a quick and controlled stop in an emergency situation. In the 1991 SNPRM, NHTSA proposed the same cold effectiveness test as proposed in the 1987 SNPRM, with some minor modifications. Specifically, the agency proposed that vehicles would have to stop within 70 m in both the fully loaded and lightly loaded conditions. Based on testing and information supplied by the commenters, the agency believed that this stopping distance requirement for a cold effectiveness test is equivalent in stringency to the current requirement in FMVSS No. 105. The agency continues to believe that the requirements for the cold effectiveness test are of equivalent stringency, as explained below.

Like the other effectiveness tests, the proposed stopping distance requirements for the cold effectiveness test was expressed in the form of an equation. Specifically, this equation provides that stopping distance must be less than or equal to 0.10V + 0.0060V, where V refers to velocity in km/h. The first part of the equation, the 0.10V term, accounts for brake system reaction time of 0.36 second. The second part of the equation, 0.0060V, represents an assumed mean fully developed deceleration rate. The specified performance criterion is not the deceleration rate or the system reaction time, but the stopping distance.

Commenters disagreed about the stringency of the proposed stopping distance tests. While GRRF agreed to the proposed 70 m requirement in the interest of harmonization, GM, Ford, MVMA, Advocates, and the CAS disagreed with the proposed stopping distances. GM stated that the reduction in maximum allowable pedal force increased stringency by 27 percent. It further stated that of nine cars it tested, three failed to meet the proposed 70 m and an additional four failed to meet the 70 m within 10 percent compliance margin. Based on this information, GM argued that a significant number of its vehicles would fail the proposed cold effectiveness test, even though they would comply with FMVSS No. 105. Ford and MVMA stated that the stopping distance was appropriate if the PFC were raised to 1.0.

In contrast, Advocates and CAS commented that the proposed stopping distances were not sufficiently stringent. Advocates stated that the stopping distance should be reduced from 70 m in order to force more original equipment manufacturers to include ABS and brake power assist units as standard equipment. CAS objected to increasing the reaction time component in the stopping distance formula.

After reviewing the available information, NHTSA has determined that requiring a passenger car to come to a complete stop within 70 m (230 feet) from 100 km/h (62.1 mph) provides an appropriate level of braking performance. The agency has decided to require the cold effectiveness test to be conducted at both LLVW and GVWR, with the pedal force being between 65 and 500 N (14.6 to 112.4 lbs).

As it has emphasized in earlier notices, NHTSA notes that it is inappropriate to look only at the raw numbers in FMVSS No. 105 and FMVSS No. 135 and state that one standard is more or less stringent than the other. Agency tests conducted on identical vehicles to the performance requirements in FMVSS No. 105 and FMVSS No. 135 indicate that the average margin of compliance for the cold effectiveness tests at GVWR in the two standards were almost identical (11.5 percent for FMVSS No. 135, and 11.9 percent for FMVSS No. 105). Therefore, NHTSA does not agree with GM's assertions that FMVSS No. 135 is more stringent than FMVSS No. 105.

NHTSA notes that the stopping distances specified in FMVSS No. 135 are slightly longer than the distances specified in FMVSS No. 105. Nevertheless, the agency is confident that the two FMVSSs provide a comparable level of safety, for the following reasons. First, the new burnish procedure in FMVSS No. 135, which is closer to real world practice, is not as severe as that in FMVSS No. 105. As a result, the longer stopping distances in the new standard are mostly attributable to the less severe, but more realistic, burnish procedures, not to an inherent weakening of brake efficiency requirements. Second, the maximum allowable pedal force has been reduced from 150 lbs in FMVSS No. 105 to 112.4 lbs in FMVSS No. 135. Along with lengthening the stopping distances slightly, the lower pedal force will more closely reflect the pedal forces likely to be applied by real world drivers, as opposed to those on a test track.

NHTSA notes that CAS incorrectly assumes that increasing the brake reaction time component in the stopping distance equation, by itself, decreases the test's stringency. Brake reaction time is merely part of a formula by which stopping distances are gauged, but it is the stopping distance, and not the formula, which determines the stringency of the rule. To illustrate, in the 1991 SNPRM, the agency increased the reaction time component of the cold effectiveness test equation from 0.07V to 0.10V. However, the stopping distance remained at 70 m. To compensate for this change in the system reaction time, the deceleration term was modified slightly. Accordingly, a vehicle must still stop in 70 m, so there is no actual increase or decrease in stringency from the first SNPRM.

NHTSA believes that Advocates' concern about the installation of power assist units is moot. According to Ward's Automotive Reports (December 30, 1993 and April 18, 1994 Reports), all current U.S. cars and import cars are equipped with power brakes. Moreover, antilock brake systems are quickly becoming a feature available on many cars. As stated above, by MY 1999 the agency expects 85 to 90 percent of all new cars to be ABS-equipped. The market is responding directly to consumer preference, and therefore Advocates' goal of having more vehicles equipped with ABS is being achieved without a more stringent stopping distance requirement.

NHTSA disagrees with GM's comment that the cold effectiveness stopping distance requirements are 27 percent more stringent due to lower allowable pedal force, because cold effectiveness stops are usually not pedal force limited. In other words, despite the maximum allowable pedal force of 150 lbs in FMVSS No. 105, vehicles rarely needed to be braked with such a pedal force to pass the stopping distance requirement. In fact, pedal forces rarely exceeded the 112.4 lbs (500 N) permitted in FMVSS No. 135. Therefore, the agency does not believe that the lower maximum pedal force allowed in the new standard will result in increasing the stringency of the cold effectiveness requirements in comparison with FMVSS No. 105.

Toyota commented that the minimum initial brake temperature should be raised from 50 °C to 65 °C, but did not give any reasons for the request.

Based on testing conducted at VRTC, NHTSA believes that the present minimum initial brake temperature, which was proposed in the NPRM and the two SNPRMs, represents an appropriate temperature at which to begin the cold effectiveness test runs, and has no information indicating it should be changed. Therefore, the agency is retaining the initial brake temperature requirement as proposed.

7. High Speed Effectiveness

In the 1991 SNPRM (Notice 5), NHTSA proposed a high speed effectiveness test because cars are sometimes driven at higher speeds than provided for in the cold effectiveness test that is conducted at 100 km/h (62.1 mph). The agency proposed that under the high speed effectiveness test for vehicles capable of a maximum speed over 125 km/h, a vehicle would be tested at a speed representing 80 percent of its maximum speed, with a maximum limit of 160 km/h (99.4 mph). The upper speed limit was specified due to facility limitations and safety concerns during testing. The agency proposed that the high speed test would only be conducted for vehicles with a maximum speed greater than 125 km/h. The agency proposed a new equation to reflect the change in system reaction time from 0.07V to 0.10V. The agency stated that while the SNPRM proposal is more stringent than the latest GRRF proposal, the agency's test data indicated that all test cars would be able to meet the proposed requirement.

The GRRF generally accepted the high speed effectiveness formula, and the maximum test speed limit. Nevertheless, it requested that NHTSA delete the lower speed limit proposed in the 1991 SNPRM, since R13 does not specify a lower limit. GRRF further stated that the cold effectiveness test and high speed effectiveness tests are qualitatively different because the former is run with the engine in neutral, while the latter is run with the engine in gear.

NHTSA is pleased that the GRRF has agreed to incorporate the proposed high speed test in R13H. Nevertheless, the agency believes that it is necessary to include the lower limit test speed. Accordingly, NHTSA has decided not to conduct the high speed test for vehicles with a maximum speed under 125 km/h, since it would be illogical and would provide no safety benefits to conduct a high speed test at a lower speed than the speed required by the cold effectiveness test. The agency notes that 80 percent of the lowest maximum speed for the high speed effectiveness test is 100 km/h. The agency does not believe that running a high speed test at a speed lower than 100 km/h, the cold effectiveness test speed, is worthwhile, regardless of engine drive position.

Ford commented that the test should be run only at GVWR, but gave no reason for deleting the LLVW run.

NHTSA has decided that it is consistent with the interests of motor vehicle safety to test at both GVWR and LLVW since vehicles are used at both weights. Similarly, it is in the interest of international harmonization to test at both load conditions, since R13 does so. Accordingly, in FMVSS No. 135's high speed effectiveness test, a vehicle will be tested at both LLVW and GVWR. The test will be conducted at a pedal force between 65 and 500 N (14.6 to 112.4 lbs).

JAMA and Toyota recommended specifying only four runs at high speeds instead of the six proposed in the 1991 SNPRM.

NHTSA previously addressed this issue in the 1987 SNPRM in which the agency proposed increasing the number of test runs from four to six. In that notice, NHTSA explained that such a change would minimize driver effects and decrease test variability, because the prescribed performance would have to be achieved on only one stop in the six runs. Even though reducing the number of runs to four might nominally decrease the expense of the test, such a change could increase the test's stringency.

8. System Failure

In previous notices, NHTSA proposed stopping distance requirements for situations involving the engine being off, antilock functional failure, variable proportioning valve failure, hydraulic circuit failure, and the power assist unit being inoperative. Aside from the engine off requirement, FMVSS No. 105 includes similar requirements which are crucial if part of the service brake system or engine should fail or become inoperative. These requirements ensure that the vehicle's brake system will still be able to bring the vehicle to a controlled stop within a reasonable distance.

a. Stops with engine off.—In the NPRM and two SNPRMs, NHTSA proposed requirements to address stops with the engine off. The agency explained that the proposed requirement was reasonable since engine stalling is a relatively common occurrence, even though FMVSS No. 105 does not include a comparable requirement. The proposal to require vehicles to stop within 73 m after engine failure was slightly less stringent than the 1987 SNPRM's proposed requirement for stops within 70 m. The agency stated that the proposal was consistent with the latest proposal by GRRF and thus will promote harmonization.

Advocates and CAS were concerned that the longer permissible stopping distance of 73 m in the engine failure condition would increase crashes. The GRRF recommended that the vehicle be able to stop after engine failure within 70 m rather than the proposed 73 m. The GRRF stated that the requirements of R13 and R13H should be easily met, provided that there is an adequate reservoir in the braking system and a non-return valve is fitted to the brakes. This equipment should ensure that the brakes can operate even without the engine running.

NHTSA has decided to adopt the engine failure test with a stopping distance of 70 m. Throughout the rulemaking, the agency has attempted to make the engine failure stopping distance consistent with GRRF and consistent with the stopping distance requirement in the cold effectiveness test. In the 1991 SNPRM, the agency stated that its proposal was consistent with the GRRF. This was true when the stopping distance was 73 m for both the cold effectiveness and engine off tests. Since the cold effectiveness stopping distance is now 70 m, the agency is adopting a stopping distance of 70 m for the engine off test. The engine off test will be performed at GVWR, with six stops from 100 km/h, using a pedal force between 65 N and 500 N.

b. Antilock functional failure.—In the two SNPRMs, NHTSA proposed separating the antilock and variable proportioning valve failure requirements into different sections to

reflect the differing failure modes. In the 1991 SNPRM, the agency proposed slightly different stopping distances to reflect the increase in system reaction time and higher decelerations on the cold effectiveness test, while maintaining the same percentages as in the 1987 SNPRM.

For Antilock functional failure, NHTSA proposed a stopping distance of 85 m from a test speed of 100 km/h. The proposed requirement would apply only to functional failures of the ABS system and not to structural failures that are covered by the hydraulic circuit failure requirements. The proposed stopping distance maintains the philosophy that antilock functional failure performance should be 80 percent of the cold effectiveness performance requirement, and is consistent with the requirements adopted for Regulation R13H.

Without explaining what it perceived to be inconsistent, Fiat requested that the agency make the antilock failure requirements in FMVSS No. 135 consistent with R13H. Advocates and CAS requested that NHTSA adopt a stopping distance of 80 meters as proposed in the NPRM. They commented that the SNPRM's proposed stopping distance of 85 meters, while lower than the distance proposed in the 1987 SNPRM, still exceeded the NPRM by 5 meters.

NHTSA has decided to adopt the 85 meter stopping distance requirement for antilock functional failure, as proposed. The agency believes Fiat's comment must have been based on a mistaken impression that the requirement in Regulation 13H was some other value. In fact, the two requirements are harmonized.

The observations of CAS and Advocates that the performance requirement has changed by 5 meters since the NPRM (Notice 1) is correct. Due to various changes in the equations, which have been explained in the two SNPRMs, the proposed requirement went from 80 meters to 86 meters, and then back to 85 meters. Nevertheless, the 80 percent of cold effectiveness performance concept has been maintained throughout this rulemaking. The value being adopted is in agreement with that philosophy, is harmonized with the proposed Regulation 13H, and is considerably more stringent than the corresponding requirement in FMVSS No. 105. CAS and Advocates have provided no justification for returning to an 80 meter value.

Ford, ITT–TEVES, GM, BMW, Chrysler, the GRRF, and MVMA requested that the agency clarify the definition of an ABS ''functional failure simulation'' to indicate that only the ABS system is covered by this requirement. GM and Chrysler stated that the ABS failure test should not be misunderstood to include failures affecting other aspects of the service brake system. They explained that although ABS have previously been added on to the service brake system, increasingly ABS is completely integrated into the service brake system.

Based on the comments, NHTSA believes that it is necessary to clarify the meaning of the phrase ''any single functional failure in any such system.'' Since this requirement applies to antilock systems, only a failure in an antilock system is covered by this requirement. Nevertheless, if a functional failure of the ABS also affects or degrades the service brake system, no artificial means are entailed to keep the service brake system intact when that failure is introduced. In such a situation, the vehicle with the failed ABS and failed service brake system resulting from the single failure, will then be subject to both the ABS failure and partial system failure tests. As the commenters state, manufacturers are increasingly building integrated brake systems rather than installing add-on antilock systems. The agency believes that this requirement is appropriate since it will prohibit any single ABS failure from degrading the service brake systems beyond the performance requirements of the ABS failure test. To ensure clarity, NHTSA has decided to add the following provision to S7.8.2(g)(1): ''Disconnect the functional power source, or any other electrical connector that would create a functional failure.''

Ford recommended deleting the ABS functional failure test at LLVW, stating it was the same as the LLVW cold effectiveness test, if the ABS functional failure is limited to a non-actuation failure mode. In the cold effectiveness test, ABS is active and therefore may actuate during the test. For the ABS functional failure test, the ABS is not working. If the ABS is of an add-on type design rather than an integrated system, and if the cold effectiveness test is conducted at a brake force level that does not result in activation of the ABS, then it is true that the tests would be redundant. However, in many cases one or both of those conditions are not met, so the tests would be different. Therefore, it would be inappropriate to delete the test as requested by Ford.

Bendix stated that with respect to S7.8.2(g)(2) [11], the electrical function failure induced should be one that makes the system inoperative in order to activate the warning indicator. Kelsey-Hayes requested that the agency clarify the meaning in S7.8.2(g)(2) about the continuing operation of the system.

An electrical functional failure that makes the ABS inoperative is required by S5.5.1(b) to activate the warning indicator. S7.8.2(g)(2) is the test to determine compliance with S5.5.1(b). In response to Kelsey-Hayes, the agency notes that an unplugged ABS module should activate the antilock system warning indicator. The agency has decided to clarify paragraph S7.8.3 by adding the words ''service brake'' before the word ''system.''

c. Variable brake proportioning functional failure.—In the 1991 SNPRM (Notice 5) NHTSA proposed a stopping distance of 110 meters from a test speed of 100 km/h to evaluate variable proportioning valve failure. This was slightly shorter than the distance of 112 meters proposed in the 1987 SNPRM. In both notices, the proposal was based on the mean fully developed deceleration rate of 60 percent of that required for the cold effectiveness test. In the 1991 SNPRM, the agency revised the proposal to better define how a variable proportioning valve failure is simulated and to clarify that a warning to the driver of valve failure is only required where there is an electrical functional failure in the variable proportioning valve.

Fiat commented that the variable proportioning valve functional failure test is not necessary given that neither EEC directive 75–524 nor R13 and R13H test for this type of failure, despite years of experience.

NHTSA believes that the lack of documented variable proportioning valve passenger car failures in the U.S. is not a sufficient reason against specifying this requirement. The agency notes that there have been considerable problems with variable proportioning valves on trucks, the vehicle type most typically equipped with variable proportioning valves, both in the U.S. and in Europe. Fiat produced no data to support its assertion that the test is unnecessary for passenger cars. NHTSA notes that a corresponding requirement is included in the proposed Regulation 13H.

ITT–TEVES recommended a stopping distance of 168 m for the variable proportioning valve failure test. It reasoned that vehicles would not be able to meet the 110 m stopping distance because of wheel lock caused by a dynamic load transfer from the rear to the front of the vehicle during braking.

[11] This section requires a determination of whether an ABS electrical functional failure activates the brake system warning indicator.

NHTSA disagrees with ITT–TEVES recommendation to dramatically increase the stopping distance requirement for the variable proportioning valve test. The agency believes that it would be inconsistent with motor vehicle safety to allow a vehicle that is so greatly influenced by an operational variable proportioning valve that when the valve fails the brakes lock up and the vehicle needs 168 meters to stop. The agency further notes that the problem discussed by the commenter, which might affect trucks in rare cases, is even less likely to affect passenger cars.

The GRRF stated that the 60% cold effectiveness requirement is more stringent than the European specification in Regulation 13. Nevertheless, the GRRF stated that it could accept the proposed performance requirement for variable proportioning valve functional failure for purposes of Regulation 13H, provided that its concerns set forth below with respect to S7.9.2(g)(1) are met.

Chrysler, Ford, MVMA, and the GRRF commented that when a variable proportioning valve is disconnected or fails for any reason, it reverts to a default position, functioning at the lowest pressure possible in its proportioning range. Therefore, they state that S7.9.2(g)(1) should be changed to reflect this default condition. They believe that to require the proportioning valve to be operated in any specified position in its operating range would require equipment that is not found on current vehicles.

NHTSA agrees with the commenters that S7.9.2(g)(1) should be revised to allow the variable proportioning valve to return to its normal, default, position, when disconnected, since this will more accurately test the vehicle's real world braking ability. Accordingly, the agency has decided not to require the variable proportioning valve to be held in any position in its operating range, thus allowing it to revert to its uncontrolled condition.

NHTSA notes that the stopping distances for variable proportioning valve functional failure are shorter than those of FMVSS No. 105 (while the stopping distances for structural failure are longer). The agency has determined that the stopping distances which are more stringent for functional failures are appropriate, since functional failures are more likely to occur.

d. Hydraulic circuit failure. In the 1991 SNPRM (Notice 5), NHTSA proposed a stopping distance of 168 m (551 feet) from a test speed of 100 km/h. This proposal is identical to that included in the proposed Regulation 13H. It maintains the same deceleration term as in the 1987 SNPRM (Notice 4), but reflects the proposed reaction time changes in the equation for the cold effectiveness performance requirement.

Advocates stated that increasing the stopping distance in the hydraulic circuit failure test by 42 feet from the NPRM (Notice 1) decreased the Standard's stringency compared to the initial proposal. It further stated that the 1991 SNPRM (Notice 5) also was less stringent than the 1987 SNPRM (Notice 4). There were no other comments regarding the stringency of this requirement.

Based on testing and other available information, NHTSA has decided to adopt the proposed stopping distance of 168 meters (551 feet) from a test speed of 100 km/h for both the hydraulic circuit failure tests. The agency has decided to adopt the stopping distance formula ($0.10V+0.0158V^2$), as proposed in the 1991 SNPRM. As explained in previous notices, it is not possible to compare the stringency of FMVSS No. 105 and FMVSS No. 135 directly when discussing hydraulic circuit failure requirements. This is primarily because there is a significant difference in allowable pedal force during the test. FMVSS No. 105 limits pedal force to 150 lbs, whereas the maximum pedal force in FMVSS No. 135 is 500 N (112.4 lbs). Although as a general matter, the stopping distance of a vehicle improves as greater pedal force is applied, it is not possible to quantify a precise relationship between stopping distance and pedal force. The relationship between these factors is non-linear; it varies among vehicle models, and depends upon various parts of the vehicle, including tires and brake system components. It is broadly true, however, that as pedal force increases, stopping distance decreases.

In response to Advocates' comment regarding the changes between the 1985 NPRM (Notice 1) and the 1991 SNPRM (Notice 5), the rationale for those changes was set forth in the two SNPRMs.

Bendix requested that S7.10.3(f) be clarified so that the induced failure for testing would be limited to the normal braking circuits, but not as part of the ABS that is not part of the normal braking circuit.

NHTSA notes that it is not clear exactly what Bendix means by ''normal braking circuits.'' Section S7.10.3(f) states that the failure is to be induced in the service brake system. The failure could be anywhere in that system, including any part of an ABS that is common to the service brake system. Any part of the ABS that is not common to the service brake system would be subject to testing to the failed ABS requirements, not the hydraulic circuit failure requirements. The agency believes the test condition is clear as stated, and further clarification is unnecessary. Therefore, S7.10.3(f) is adopted as proposed.

e. Power assist unit inoperative. In the 1991 SNPRM, NHTSA proposed a stopping distance of 168 m (551 feet) from a test speed of 100 km/h. This proposal is identical to that included in the proposed Regulation 13H. It maintains the same deceleration term as in the 1987 SNPRM, but reflects the proposed reaction time changes in the equation for the cold effectiveness performance requirement.

Advocates opposed the proposed stopping distance of 168 m for stops with an inoperative power assist, stating that it compared unfavorably with the 165 m proposed in the 1987 SNPRM and the 155 m proposed in the NPRM. In contrast, Ford and GM stated that the agency had proposed a significant increase in stringency from FMVSS No. 105. These commenters recommended a stopping distance of 177 meters (580 ft), stating that such a distance would be equivalent to R13, and would still be more stringent than the 456 foot stopping distance in FMVSS No. 105 because of the decreased maximum pedal force.

After reviewing the comments, NHTSA has decided to adopt the proposed stopping distance of 168 meters (551 feet) from a test speed of 100 km/h for stops when the power assist is inoperative. The agency has decided to adopt the stopping distance formula, ($0.10V+0.0158V^2$), as proposed in the 1991 SNPRM.

As explained in the section on hydraulic circuit failure, it is not possible to compare the stringency of FMVSS No. 105 and FMVSS No. 135 directly when discussing power assist failure requirements, primarily because there is a significant difference in allowable pedal force during the test. None of the commenters who asked for a more or less stringent stopping distance value provided justification for their requests.

9. Parking Brake Requirements

a. Dynamic test. In the NPRM and 1987 SNPRM, NHTSA proposed a dynamic parking brake test that it believed was consistent with the GRRF decisions. The dynamic test was intended to ensure that the driver could use the parking brake to stop a moving vehicle during emergency situations. In the 1991 SNPRM, NHTSA proposed requiring that vehicles utilizing the

service brake's friction linings for the parking brake be tested at a speed of 80 km/h and that vehicles utilizing separate friction linings for the parking brake be tested at 60 km/h. The agency decided that it was not necessary to include a stopping distance requirement, as was proposed in the 1987 SNPRM.

Volkswagen, Mercedes Benz, GM, Suzuki, MVMA, Chrysler, Ford, and OICA objected to the proposed dynamic parking brake test. These commenters stated that the agency had not identified any safety need for a dynamic parking brake test and that FMVSS No. 105 has no such test. These commenters stated that such a test is neither needed nor appropriate since the primary purpose of the parking brake is to statically hold a vehicle on a gradient and not to provide deceleration capabilities for a moving vehicle. They state that it is potentially dangerous for drivers to apply parking brakes in a dynamic situation because it is difficult to modulate the application force. Moreover, such applications could lead to uncontrollable rear wheel lock up and loss of vehicle control.

Volkswagen, Mercedes Benz, GM, Suzuki, MVMA, Chrysler, Ford, and OICA stated that the dynamic parking test was adopted in ECE R13 prior to the almost universal use of dual split service brake systems. Such brake systems provide extra braking reserves in the event of a partial failure because an independent part of the split system remains intact and unaffected by the failure in the other part of the system. According to the commenters, ECE is no longer working on revising its dynamic test, and is even discussing eliminating it.

Mercedes commented that a dynamic test penalizes parking brake designs that are highly self energizing (*i.e.,* that require a relatively low control force but are highly effective in static situations) because their static-efficient design makes them more susceptible to fading. It stated that deleting the dynamic test would improve the design of parking brakes by permitting the optimization of their static holding performance.

In contrast, Advocates and CAS supported including a dynamic parking brake test, although they opposed the agency's decision not to propose stopping distance requirements in the 1991 SNPRM. Advocates stated that the important function of a dynamic standard for parking brake performance is the ability to control manufacture of parking brake systems either with or without separate friction that will reasonably stop a car from controlling test speeds when there is a complete failure of service brakes. That organization stated that without a specific stopping distance requirement, the agency was essentially conceding its attempt to strengthen .105 in order to ensure adequate dynamic performance of the parking brakes when all service brakes fail.

CAS commented that NHTSA's defect files contradict GM's comment that current brake system designs ''obviate the safety need'' for emergency brakes and performance standards. It believed that in many instances drivers have had to use the emergency brake as a last resort to stop the car.

After reviewing the available information, NHTSA has determined that a dynamic parking brake test would provide no significant safety benefits. This decision is based on the fact that FMVSS No. 105 does not include a dynamic parking brake test and on the current state of braking technology. As the manufacturers correctly stated, the ECE requirement pre-dated the widespread use of split service brake systems, which are now standard on all passenger cars. Therefore, the justification for using the parking brake in an emergency situation is no longer relevant. The agency further notes that the partial failure requirements are sufficient in dynamic emergency situations.

Advocates and CAS argued that these requirements are needed to address the situation of ''complete failure'' of a service brake system. The agency has no evidence that complete brake failure (simultaneous failure of both circuits of a split brake system) occurs with any significant frequency. Moreover, because the parking brake is for static situations such as parking and not dynamic ones, the parking brake is not designed to act in dynamic emergencies. Therefore, the agency is concerned that applying the parking brake in emergency situations may cause wheel lockup and instability. The agency further notes that the initial impetus to harmonize with the ECE with respect to a dynamic parking brake requirements will likely become moot, given that the ECE is currently discussing deletion of this requirement from R13 and R13H.

b. Static test. FMVSS No. 105 requires that a passenger car's parking brake be able to hold the vehicle when it is parked on a 30 percent grade and a force is applied to the parking brake control not exceeding 125 pounds for foot operated parking brake systems and 90 pounds for hand operated parking brake systems. In the NPRM, the agency proposed requiring the brake to hold the vehicle when parked on a 20 percent grade and a force not exceeding 500N (112 pounds) for foot-operated parking brakes and 320N (72 pounds) for hand operated parking brakes.

In the 1991 SNPRM (Notice 5), NHTSA proposed that the parking brake be able to hold the vehicle when it is parked on a 20 percent gradient and a force is applied to the parking brake control not exceeding 500N (112 pounds) for foot operated brakes and 400N (90 pounds) for hand operated brakes. The static parking brake test is a pass/fail type of test, *i.e.*, the parking brake either holds the vehicle or it does not. Accordingly, the test's stringency is determined by the gradient and the allowable control force. The two test conditions are interrelated since the higher the force that is applied to the control, the steeper the gradient on which the vehicle can be held in place. In proposing in the SNPRMs to have the hand control force limit at 400 N, the agency stated that the static parking brake test would be somewhat less stringent for manual transmission vehicles, but would be equivalent for automatic transmission vehicles, which make up the majority of cars sold in the U.S. today.

Advocates objected to the reinstatement in the 1987 SNPRM (Notice 4) of the 400 N (90 lbs.) allowable control force for hand brakes, stating that the 320 N (72 lbs.) level proposed in the NPRM clearly recognized the increasing prevalence of hand-operated parking brakes in the American car fleet and the simultaneous surge in numbers and percentage representation of elderly car operators who often cannot apply high levels of force to hand-operated parking brakes.

Advocates also argued that other aspects of the existing parking brake requirements of FMVSS No. 105 have been weakened. That organization noted that the gradient for the parking brake test is 30 percent in FMVSS No. 105, as opposed to 20 percent in the proposed FMVSS No. 135. Advocates stated that in order to offset this less stringent test parameter, the agency proposed lower allowable control forces in the NPRM, 500 N for foot-operated systems and 320 N for hand-operated systems, but later conceded the proposed improvement for hand-operated systems.

Advocates stated that in the 1987 SNPRM, NHTSA reasoned that it was appropriate to specify a less severe gradient and a stronger engagement force for hand-operated parking brakes, because the ''requirements are somewhat less stringent than those of FMVSS No. 105, but [the agency] also believes that the FMVSS No. 105 level of stringency for those particular requirements is unsupported as

resulting in any measurable safety benefits over the proposal.''

Advocates argued that the agency's argument represents an unsupported rationalization of an European standard with much less of a discernible safety benefit. That commenter stated that on any reasonable intuitive basis, it is clear that FMVSS No. 105 was aimed at a higher level of safety and that the agency's original NPRM would have strengthened FMVSS No. 105 and established improved safety for the American motorist. That organization argued that NHTSA has made no effort at any time over the life of FMVSS No. 105 to collect real-world data on the safety benefits of its parking brake performance requirements.

In contrast, Kelsey-Hayes commented that manufacturers will have to make design changes since the 500 N (112 lbs) maximum foot operated pedal force is a significant difference from the 556N (125 lbs) permitted in FMVSS No. 105. Fiat stated that the agency should consider a grade of 18 percent, which would be consistent with R13H.

The comments of Advocates and Kelsey-Hayes relate to proposals made in the original NPRM (Notice 1) and the 1987 SNPRM (Notice 4). Those arguments were already addressed by the agency in the second SNPRM (Notice 5), and no new arguments have been presented by the commenters. The requirements adopted in this final rule are unchanged from the two SNPRMs.

Fiat is mistaken in its assertion that the grade should be 18%, to be consistent with R13H. Although the gradient specified in R13 has been changed to 18%, a corresponding change has not been made in the latest proposal for R13H, the ECE's most recent statement about brake harmonization. Therefore, the gradient and parking brake application force levels adopted in this final rule are consistent with R13H.

Ford commented that the agency should substitute the phrase ''with the average pedal force determined from the shortest GVWR cold effectiveness stop'' for the phrase ''the service brake applied sufficiently to just keep the vehicle from rolling.'' Ford believes the actual force applied will vary greatly from driver to driver, and the language as it presently stands is not an objective measure of the amount of force.

NHTSA believes such a modification is not necessary. The agency notes that the requirement is derived from the language in FMVSS No. 105, which has not presented any problem. The minimum force necessary to keep the vehicle from rolling is a function of the vehicle, tires, and roadway. The driver just keeps increasing the force until that point is reached, and it will not vary from driver to driver.

Bendix requested that NHTSA specify whether the brake linings can be heated up to an initial brake temperature before the static parking brake test; and if so, to specify a procedure. Bendix stated that the procedure would be especially important for vehicles with parking systems that do not utilize the service friction elements.

NHTSA has decided to clarify the initial brake temperature requirements in S7.12.2(a), because the proposal did not distinguish the maximum initial brake temperature for the parking brake test by the type of friction element and did not state how the initial brake temperature should be achieved for the parking brakes. In the final rule, the agency has decided to specify that the parking brakes with service brake friction materials are to be tested with the initial brake temperature less than or equal to 100°C (212°F), while parking brakes with non-service brake friction materials are to be tested at ambient temperature at the start of the test.

10. Fade and Recovery

In the 1985 NPRM (Notice 1), NHTSA proposed a fade and recovery test to ensure adequate braking capability during and after exposure to the high brake temperatures caused by prolonged or severe use. Such temperatures are typically experienced in long, downhill driving. Specifically, the agency developed a heating sequence for this proposal based on SAE Recommended Practice J1247 (Apr 80), ''Simulated Mountain Brake Performance Test Procedure.'' Among its provisions was reducing the interval between snubs from 45 seconds to 30 seconds.[12] The agency stated that the proposed sequence was similar to those in FMVSS No. 105, but produced a temperature cycle that more closely approximates an actual mountain descent than either FMVSS No. 105 or the ECE draft test procedure. Accordingly, the agency decided not to propose the ECE's draft proposed heating sequence.

In the 1991 SNPRM, NHTSA specified a heating sequence in S7.14, a hot performance test in S7.15, a cooling sequence in S7.16, and a recovery requirement in S7.17. The agency proposed that the required stopping distance during the hot performance test be the shorter of 89 meters from a test speed of 100 km/h or 60 percent of the deceleration achieved on the shortest fully loaded cold effectiveness stopping distance. In addition, the agency revised certain test conditions and procedures in the NPRM and 1987 SNPRM to reflect changes in performance agreed to by the ECE and EEG. For instance, the agency proposed that the pedal force be adjusted as necessary during each snub to maintain the specified constant deceleration rate, rather than applying a specific pedal force. The 1991 SNPRM also proposed that the interval between the start of the snubs would be 45 seconds. The proposed modifications to the fade and recovery test were consistent with modifications made to other road tests being introduced in FMVSS No. 135. These include permitting momentary wheel lockup and a longer reaction time in calculating the maximum stopping distance.

a. Heating snubs. In response to the proposal in S7.14 about heating snubs, JAMA, MVMA, Chrysler, Ford, GM, and the GRRF stated that the 45 second interval between snubs is appropriate. Chrysler submitted test data showing that brake temperatures and brake lining temperatures at 30 second intervals were significantly higher than under test conditions in FMVSS No. 105, addressing fade.

In contrast, CAS and Advocates favored a 30 second interval, as proposed in the NPRM. The advocacy groups claimed that by allowing cooler brakes the stopping distance requirements will be less stringent. Advocates stated that increasing the time interval between heating snubs from 30 seconds in the NPRM to 40 seconds in the 1987 SNPRM, to 45 seconds in the 1991 SNPRM contradicted NHTSA's earlier proposals and would not result in brake temperatures comparable to those obtained in FMVSS No. 105.

Based on its testing and other available information, NHTSA has determined that the 45 second interval is appropriate. As a result of this time interval and other changes, the requirement will be closer in stringency to ECE R13 and FMVSS No. 105. NHTSA believes that FMVSS No. 135's heating snub procedure is roughly equivalent to the requirements in FMVSS No. 105. The agency notes that in the 1987 SNPRM, the agency lengthened the time interval between snubs to 40 seconds, but shortened the stopping distance on the hot stop test to compensate.

b. Hot performance. In response to the proposal in S7.15 about hot performance, commenters addressed such issues as the stopping distance requirement, the pedal force, and the number of stops. In Notice 5, the agency increased the stopping distance in the

[12] In the 1987 SNPRM, NHTSA proposed an interval of 40 seconds.

hot stop test slightly to maintain the same relationship to the cold effectiveness stop.

JAMA and Toyota recommended that the stopping distance for the hot performance test be lengthened to 90 meters. Similarly, Ford requested that the stopping distance be lengthened to 93 meters. In contrast, Advocates objected to the proposed increase in stopping distance from 80 meters in the NPRM, to 86 meters in the 1987 SNPRM, to 89 meters in the 1991 SNPRM. It stated that the increased stopping distances will result in the hot performance test being less likely to evaluate fade since brakes will remain cooler.

After reviewing the available information, NHTSA has decided to specify a stopping distance for the hot performance test of 89 meters, as proposed in the 1991 SNPRM. The agency believes that this stopping distance requirement will ensure adequate braking capability during and after exposure to high brake temperatures caused by prolonged or severe use. The first hot stop is done with a pedal force not greater than the average pedal force recorded during the shortest GVWR cold effectiveness test. The stopping distance for the first hot stop must be less than or equal to the distance corresponding to 60 percent of the deceleration actually achieved on the shortest GVWR cold effectiveness stop. The second hot stop is done with a pedal force not greater than 500N, and the stopping distance on at least one of the two stops must also be less than or equal to 89 m or $0.10V+0.0079V^2$. The agency notes that the results of the second stop may only be used to satisfy the 89 m stopping distance requirement, and not the 60 percent requirement.

In response to Advocates, JAMA, Toyota, and Ford, NHTSA notes that throughout this rulemaking, the hot performance stopping distance has always been determined by a formula based on a constant percentage of the deceleration rate for the cold effectiveness stop, and as the latter was changed, so was the former. Accordingly, the stopping distance proposed in the 1991 SNPRM served to retain the same relationship to the cold effectiveness test. None of the commenters presented compelling reasons why that philosophy should be abandoned.

Ford, GM and MVMA expressed concern about the proposed pedal force test conditions for the hot performance stops. GM stated that the proposed pedal force levels may make it difficult to comply with the stopping distance requirement. GM requested that the agency adopt a pedal force limitation of 500 N (112 lbs.) for both hot stops. Ford recommended using a constant pedal force corresponding to approximately 90 percent in the cold effectiveness deceleration.

NHTSA has decided not to modify the test conditions with respect to pedal force for these tests. The purpose of the hot performance test is to determine how much the stopping performance of the vehicle will be degraded as the result of the brakes being heated, as might happen during a mountain descent or severe stop-and-go driving. The hot performance is measured against two separate criteria. First, the vehicle must attain a specific minimum level of absolute performance. Second, it must attain a specified percentage of the performance actually achieved in the ''cold'' condition, as measured by the cold effectiveness test, even if that performance was significantly higher than required. In order to determine compliance with the latter requirement, the performance in the hot performance test is compared to the performance of the brakes in the cold effectiveness test. In order for that comparison to be meaningful, the test conditions for the two tests should be as close to identical as possible.

For the cold effectiveness test, the test conditions are that the pedal force must not exceed 500N (112 pounds), and the wheels must not lock for more than 0.1 second. There are two different methods of conducting this test. European testers usually use a constant pedal force throughout any given test run. This constant pedal force is increased in subsequent runs, until the point of wheel lockup is reached, or the constant force reaches the 500N limit, whichever occurs first. In the U.S., testers generally apply an initial ''spike'' of pedal force, up to the point where the 500N limit is reached or a ''chirp'' is heard, indicating the start of wheel lockup, and then the driver ''backs off'' on pedal force to the point where the wheels do not stay locked. The ''U.S.'' method generally produces a slightly shorter stopping distance, but either method is allowed as long as neither limitation (500N or wheel lockup) is violated.

For the hot performance test, the ideal situation would be to exactly duplicate the input (pedal force vs. time curve) from the cold effectiveness test, so the outputs (stopping distances) from the two tests can be compared. If the constant pedal force method has been used for the cold effectiveness test, that is relatively easy to do. If the ''U.S.'' method has been used, however, the input is impossible to duplicate exactly. In order to accommodate both methods of testing, FMVSS No. 135 specifies that the pedal force for the first hot stop is to be not greater than the average pedal force recorded on the best cold effectiveness test run. The agency is aware that this test condition does not ensure that the input from the cold effectiveness test will be duplicated exactly. However, it is an objective test condition, and government and industry experts who have discussed this subject in numerous GRRF ad hoc meetings have not been able to come up with a better approach. Accordingly, unless and until the European and United States industry can agree on a replacement procedure, NHTSA believes it would be inappropriate to modify the requirements.

Ford commented that the mean pedal force requirement left a loophole that would allow ABS equipped vehicles to apply the full 500 N pedal force in the cold effectiveness test and again in the first hot stop. It believed that this would mask the hot versus cold performance.

NHTSA notes that although the situation described by Ford is theoretically possible, it is highly unlikely that a manufacturer would use this ''loophole'' to build a vehicle with poor hot performance characteristics. The agency notes that such a brake system design would create too great a likelihood that the ABS would allow lockup of greater than 0.1 seconds or that the vehicle would have problems passing the high speed effectiveness or failed-ABS tests.

Ford and Chrysler recommended that only one of the two stops be required to meet the performance requirements. Chrysler stated that the second stop is only run because of test driver uncertainty during the first stop. It cited problems caused by the need for the test driver to obtain the maximum performance from the brake system that, at the end of the heating snubs, has unknown performance requirements. Chrysler believed that if the first stop is invalidated because of wheel lock or driver hesitation, the driver should be permitted to use this knowledge in the second stop.

Chrysler's assertion that the second stop is only run because of test driver uncertainty during the first stop is untrue. The reason a second stop is needed is that there are two separate requirements to be satisfied: a comparison with cold effectiveness performance and a minimum level of absolute performance. The first stop provides the comparison with cold performance, because the pedal force is limited to the average pedal force applied on the best cold effectiveness stop. In most cases, stopping

performance is degraded as a result of heating rather than improved, so Chrysler's concern over inadvertent wheel lockup shouldn't be a problem on this stop.

The required level of absolute performance may or may not be met on this first stop. If it is not, the second stop allows a pedal force up to 500N. The reasoning for allowing a greater pedal force is that, in an actual driving situation, a driver will apply increased force to the brake pedal to compensate somewhat for degraded brake performance.

Multiple attempts are not allowed on the hot stop because it is important to measure hot performance while the brakes are still hot. If multiple runs were allowed, the performance measured on subsequent runs would not necessarily be a true measure of hot brake performance. While this fact makes the test somewhat more difficult to run, the agency found in its testing that it did not present problems for experienced test drivers.

c. Recovery performance. The GRRF and Fiat believed that to harmonize with R13H, the provision about pedal force needed to be modified to state that ''a pedal force not greater than the average pedal force recorded during the shortest GVWR cold effectiveness stops.'' The GRRF further stated that the fade and recovery and hot performance tests should be compared with the cold effectiveness test and that the comparison would only be valid if the input (*i.e.*, pedal force) is the same in each test and the output (deceleration or stopping distance) is measured as in R13 and R13H.

The wording in S7.14.3(c) regarding the hot stop is already as requested by GRRF and Fiat, and NHTSA has decided to make a corresponding change in S7.16.3(c) to accommodate GRRF's request. The agency believes that this modification will help harmonize the standards without any corresponding detriment to safety.

Advocates recommended returning to an over-recovery deceleration based on 120 percent of the shortest GVWR cold effectiveness stop.

As explained in the 1987 SNPRM when the deceleration rate was increased to 150 percent, the test is still more stringent than FMVSS No. 105, even at the higher level. The performance requirement has remained unchanged since 1987, and Advocates has presented no reason why it should be changed now. Accordingly, the agency has adopted the requirement as proposed in the two SNPRMs.

Bendix and Ford requested the agency to define ''average pedal force'' more fully. Bendix also asked the agency to define the phrase ''not greater than'' for purposes of the hot performance test.

NHTSA believes the terms ''average'' and ''not greater than'' are used the same way they would be defined in any dictionary, and therefore no definition is needed in the standard. Nevertheless, to avoid any misunderstanding, the terms are explained as follows: The term ''average pedal force'' is defined as the average value taken from the initiation of the pedal force until completion of the cold effectiveness stop. It is calculated from the pedal force/time curve of the shortest GVWR cold effectiveness stop, and includes any overshoot or spike that may be present at the beginning of the test. The phrase ''not greater than'' means that the maximum pedal force which can be applied during the first hot stop cannot exceed the average pedal force.

GM, MVMA, JAMA, Toyota and Ford believe that the response term (0.10V) of the recovery stop equation (S7.17.4) has been omitted (i.e., '' * * * $\leq$ S–0.10V $\leq$ * * * '' instead of '' * * * * $\leq$ S $\leq$ * * * '', thereby resulting in an ''apples-to-oranges'' comparison of the recovery stopping distance without adjusting for response time to the cold effectiveness stopping distance which is adjusted for response time. They believe the intent is to regulate recovery as a function of cold effectiveness performance after both are corrected to eliminate the response time distance. They believe that the equation should read as follows: $0.0386V^2/1.50d_c \leq S - 0.10V \leq 0.0386V^2/0.70d_c$

NHTSA agrees that the 0.10V term should be in the stopping distance for recovery performance and has therefore made the following correction to the equation in S7.17.4:

$$\frac{0.0386V^2}{1.50d_c} \leq S - 0.10V \leq \frac{0.0386V^2}{0.70d_c}$$

G. Miscellaneous Comments

Advocates argued for inclusion of water recovery, spike stop and final effectiveness requirements that appear in FMVSS No. 105, but are not included in FMVSS No. 135. Advocates believes that the absence of these requirements will result in a degradation of safety.

NHTSA has already addressed the need, or lack of it, for these requirements in previous notices, and need not be repeated here. Advocates presented nothing to justify their arguments but unsupported conjecture. The agency has considered Advocates' comments, and has decided that there is insufficient justification for inclusion of these requirements.

Advocates also made general comments opposing this rulemaking as a whole. They stated that the resulting standard is decidedly inferior in multiple aspects to the existing FMVSS No. 105. Advocates expressed the fear that the new standard would allow the importation of cars without power assist, antilock brakes, automatic brake monitoring, and other desirable features of superior brake performance, that meet only the minimum requirements of FMVSS No. 135. It stated that these would likely be the smallest, cheapest cars on the market, which would also have the poorest overall crashworthiness.

The agency notes that none of the advanced safety features mentioned by Advocates are presently required by FMVSS No. 105. Advocates' assertion that FMVSS No. 135 is inferior to FMVSS No. 105 is contradicted by previously cited agency and industry test data which show the new standard to be at least, if not more difficult to meet, overall, than the existing FMVSS No. 105. Accordingly, the agency is not convinced by Advocates' arguments in opposition of the new standard, and has decided to issue this final rule.

IV. Regulatory Analysis

A. Executive Order 12866 (Regulatory Planning and Review) and DOT Regulatory Policies and Procedures

This rulemaking document was not reviewed under Executive Order 12866. NHTSA has considered the economic implications of this regulation and determined that it is not significant within the meaning of the DOT Regulatory Policies and Procedure. A Final Regulatory Evaluation (FRE) has been prepared setting forth the agency's detailed analysis of the economic effects of this rule, and has been placed in the public docket.

Based on its analysis, NHTSA has determined that FMVSS No. 135 ensure an equivalent level of safety for those aspects of performance covered by FMVSS No. 105 and will also address additional areas of brake performance which offer safety benefits. It will offer decreased costs for the production of passenger cars, by reducing non-tariff barriers to trade. Further, the agency believes that the full test procedure in the new standard will require approximately the same amount of time and money to complete as the existing procedure under FMVSS No. 105.

B. Regulatory Flexibility Act

In accordance with the Regulatory Flexibility Act, NHTSA has evaluated the effects of this action on small entities. Based upon this evaluation, I certify that the final rule will not have a significant economic impact on a substantial number of small entities. Only relatively simple changes will generally be needed for all passenger cars to meet this standard. These changes will not significantly affect the purchase price of a vehicle. No changes will be needed for many cars. While some change in compliance costs may occur, the change will not be of a magnitude which will significantly affect the purchase price of a vehicle. For these reasons, neither manufacturers of passenger cars, nor small businesses, small organizations, and small governmental units which purchase motor vehicles, will be significantly affected by the proposed standard. Accordingly, no regulatory flexibility analysis has been prepared.

C. Executive Order 12612 (Federalism)

This action has been analyzed in accordance with the principles and criteria contained in Executive Order 12612, and it has been determined that the final rule did not have sufficient Federalism implications to warrant preparation of a Federalism Assessment. No State laws are affected.

D. Executive Order 12778 (Civil Justice Reform)

This final rule does not have any retroactive effect. Under 49 U.S.C. 30103, whenever a Federal motor vehicle safety standard is in effect, a State may not adopt or maintain a safety standard applicable to the same aspect of performance which is not identical to the Federal standard, except to the extent that the State requirement imposes a higher level of performance and applies only to vehicles procured for the State's use. 49 U.S.C. 30161 sets forth a procedure for judicial review of final rules establishing, amending or revoking Federal motor vehicle safety standards. That section does not require submission of a petition for reconsideration or other administrative proceedings before parties may file suit in court.

E. National Environmental Policy Act

The agency has considered the environmental implications of this rule in accordance with the National Environmental Policy Act of 1969 and determined that this rule will not significantly affect the human environment. No changes in existing production or disposal processes result.

List of Subjects in 49 CFR Part 571

Imports, Motor vehicle safety, Motor vehicles, Rubber and rubber products, Tires.

PART 571—[AMENDED]

In consideration of the foregoing, 49 CFR part 571 is being amended as follows:

1. The authority citation for part 571 continues to read as follows:

Authority: 49 U.S.C. 322, 30111, 30115, 30117 and 30166; delegation of authority at 49 CFR 1.50.

2. Section 571.101 is amended by revising table 2 as follows:

§ 571.101 Standard No. 101: Controls and displays.

* * * * *

BILLING CODE 4910–59–P

TABLE 2
Identification and Illumination of Displays

Column 1	Column 2	Column 3	Column 4	Column 5
Display	Telltale Color	Identifying Words or Abbreviation	Identifying Symbol	Illumination
Turn Signal Telltale	Green	Also see FMVSS108	[1] [6]	—
Hazard Warning Telltale		Also see FMVSS 108	[2] [6]	—
Seat Belt Telltale		Fasten Belts or Fasten Seat Belts Also see FMVSS 208	or	—
Fuel Level Telltale		Fuel	or	—
Gauge	—			Yes
Oil Pressure Telltale		Oil		—
Gauge	—			Yes
Coolant Temperature Telltale		Temp		—
Gauge	—			Yes
Electrical Charge Telltale		Volts, Charge or Amp		—
Gauge	—			Yes
Highbeam Telltale	Blue or Green[4]	Also see FMVSS 108	[6]	—
Brake System [8]	Red[4]	Brake. Also see FMVSS 105 & 135	—	—
Malfunction in Anti-Lock or	Yellow	Antilock, Anti-lock, or ABS. Also See FMVSS 105 & 135	—	—
Variable Brake Proportioning System[8]	Yellow	Brake Proportioning Also see FMVSS 135	—	—
Parking Brake Applied [8]	Red[4]	Park or Parking Brake Also see FMVSS 105 & 135	—	—
Brake Air Pressure Position Telltale		Brake Air Also see FMVSS 121	—	—
Speedometer	—	MPH[5]		Yes
Odometer	—	—[3]	—	—
Automatic Gear Position	—	Also see FMVSS 102	—	Yes

[1] The pair of arrows is a single symbol. When the indicator for left and right turn operate independently, however, the two arrows will be considered separate symbols and may be spaced accordingly.

[2] Not required when arrows of turn signal tell-tales that otherwise operate independently flash simultaneously as hazard warning tell-tale.

[3] If the odometer indicates kilometers, then "KILOMETERS" or "km" shall appear, otherwise, no identification is required.

[4] Red can be red-orange. Blue can be blue-green.

[5] If the speedometer is graduated in miles per hour and in kilometers per hour, the identifying words or abbreviations shall be "MPH and km h" in any combination of upper or lower case letters.

[6] Framed areas may be filled.

[7] The color of the telltale required by S4.5.3.3 of Standard No. 208 is red; the color of the telltale required by S7.3 of Standard No. 208 is not specified.

[8] In the case where a single telltale indicates more than one brake system condition, the word for Brake System shall be used.

BILLING CODE 4910–59–C

3. Section 571.105 is amended by revising S3 to read as follows:

§ 571.105 Standard No. 105: Hydraulic brake systems.

* * * * *

S3. *Application.* This standard applies to multipurpose passenger vehicles, trucks, and buses with hydraulic brake systems, and to passenger cars manufactured before September 1, 2000, with hydraulic brake systems. At the option of the manufacturer, passenger cars manufactured before September 1, 2000 may comply with the requirements of Federal Motor Vehicle Safety Standard No. 135, *Passenger Car Brake Systems*, instead of the requirements of this standard.

4. A new § 571.135 is added to read as follows:

§ 571.135 Standard No. 135: Passenger car brake systems.

S1. *Scope.* This standard specifies requirements for service brake and associated parking brake systems.

S2. *Purpose.* The purpose of this standard is to ensure safe braking performance under normal and emergency driving conditions.

S3. *Application.* This standard applies to passenger cars manufactured on or after September 1, 2000. In addition, passenger cars manufactured before September 1, 2000, may, at the option of the manufacturer, meet the requirements of this standard instead of Federal Motor Vehicle Safety Standard No. 105, *Hydraulic Brake Systems.*

S4. *Definitions.*

Adhesion utilization curves means curves showing, for specified load conditions, the adhesion utilized by each axle of a vehicle plotted against the braking ratio of the vehicle.

Antilock brake system or *ABS* means a portion of a service brake system that automatically controls the degree of rotational wheel slip during braking by:

(1) Sensing the rate of angular rotation of the wheels;

(2) Transmitting signals regarding the rate of wheel angular rotation to one or more controlling devices which interpret those signals and generate responsive controlling output signals; and

(3) Transmitting those controlling signals to one or more modulator devices which adjust brake actuating forces in response to those signals.

Backup system means a portion of a service brake system, such as a pump, that automatically supplies energy in the event of a primary brake power source failure.

Brake factor means the slope of the linear least squares regression equation best representing the measured torque output of a brake as a function of the measured applied line pressure during a given brake application for which no wheel lockup occurs.

Brake hold-off pressure means the maximum applied line pressure for which no brake torque is developed, as predicted by the pressure axis intercept of the linear least squares regression equation best representing the measured torque output of a brake as a function of the measured applied line pressure during a given brake application.

Brake power assist unit means a device installed in a hydraulic brake system that reduces the amount of muscular force that a driver must apply to actuate the system, and that, if inoperative, does not prevent the driver from braking the vehicle by a continued application of muscular force on the service brake control.

Brake power unit means a device installed in a brake system that provides the energy required to actuate the brakes, either directly or indirectly through an auxiliary device, with driver action consisting only of modulating the energy application level.

Braking ratio means the deceleration of the vehicle divided by the gravitational acceleration constant.

Functional failure means a failure of a component (either electrical or mechanical in nature) which renders the system totally or partially inoperative yet the structural integrity of the system is maintained.

Hydraulic brake system means a system that uses hydraulic fluid as a medium for transmitting force from a service brake control to the service brake and that may incorporate a brake power assist unit, or a brake power unit.

Initial brake temperature or *IBT* means the average temperature of the service brakes on the hottest axle of the vehicle 0.32 km (0.2 miles) before any brake application.

Lightly loaded vehicle weight or *LLVW* means unloaded vehicle weight plus the weight of a mass of 180 kg (396 pounds), including driver and instrumentation.

Maximum speed of a vehicle or *Vmax* means the highest speed attainable by accelerating at a maximum rate from a standing start for a distance of 3.2 km (2 miles) on a level surface, with the vehicle at its lightly loaded weight.

Objective brake factor means the arithmetic average of all the brake factors measured over the twenty brake applications defined in S7.4, for all wheel positions having a given brake configuration.

Peak friction coefficient or *PFC* means the ratio of the maximum value of braking test wheel longitudinal force to the simultaneous vertical force occurring prior to wheel lockup, as the braking torque is progressively increased.

Pressure component means a brake system component that contains the brake system fluid and controls or senses the fluid pressure.

Snub means the braking deceleration of a vehicle from a higher reference speed to a lower reference speed that is greater than zero.

Split service brake system means a brake system consisting of two or more subsystems actuated by a single control designed so that a leakage-type failure of a pressure component in a single subsystem (except structural failure of a housing that is common to two or more subsystems) does not impair the operation of any other subsystem.

Stopping distance means the distance traveled by a vehicle from the point of application of force to the brake control to the point at which the vehicle reaches a full stop.

Variable brake proportioning system means a system that has one or more proportioning devices which automatically change the brake pressure ratio between any two or more wheels to compensate for changes in wheel loading due to static load changes and/or dynamic weight transfer, or due to deceleration.

Wheel lockup means 100 percent wheel slip.

S5. *Equipment requirements.*

S5.1. *Service brake system.* Each vehicle shall be equipped with a service brake system acting on all wheels.

S5.1.1. *Wear adjustment.* Wear of the service brakes shall be compensated for by means of a system of automatic adjustment.

S5.1.2. *Wear status.* The wear condition of all service brakes shall be indicated by either:

(a) Acoustic or optical devices warning the driver at his or her driving position when lining replacement is necessary, or

(b) A means of visually checking the degree of brake lining wear, from the outside or underside of the vehicle, utilizing only the tools or equipment normally supplied with the vehicle. The removal of wheels is permitted for this purpose.

S5.2. *Parking brake system.* Each vehicle shall be equipped with a parking brake system of a friction type with solely mechanical means to retain engagement.

S5.3. *Controls.*

S5.3.1. The service brakes shall be activated by means of a foot control. The control of the parking brake shall be independent of the service brake

control, and may be either a hand or foot control.

S5.3.2. For vehicles equipped with ABS, a control to manually disable the ABS, either fully or partially, is prohibited.

S5.4. *Reservoirs.*

S5.4.1. *Master cylinder reservoirs.* A master cylinder shall have a reservoir compartment for each service brake subsystem serviced by the master cylinder. Loss of fluid from one compartment shall not result in a complete loss of brake fluid from another compartment.

S5.4.2. *Reservoir capacity.* Reservoirs, whether for master cylinders or other type systems, shall have a total minimum capacity equivalent to the fluid displacement resulting when all the wheel cylinders or caliper pistons serviced by the reservoirs move from a new lining, fully retracted position (as adjusted initially to the manufacturer's recommended setting) to a fully worn, fully applied position, as determined in accordance with S7.17(c) of this standard. Reservoirs shall have completely separate compartments for each subsystem except that in reservoir systems utilizing a portion of the reservoir for a common supply to two or more subsystems, individual partial compartments shall each have a minimum volume of fluid equal to at least the volume displaced by the master cylinder piston servicing the subsystem, during a full stroke of the piston. Each brake power unit reservoir servicing only the brake system shall have a minimum capacity equivalent to the fluid displacement required to charge the system piston(s) or accumulator(s) to normal operating pressure plus the displacement resulting when all the wheel cylinders or caliper pistons serviced by the reservoir or accumulator(s) move from a new lining, fully retracted position (as adjusted initially to the manufacturer's recommended setting) to a fully worn, fully applied position.

S5.4.3. *Reservoir labeling.* Each vehicle shall have a brake fluid warning statement that reads as follows, in letters at least 3.2 mm (⅛ inch) high: ''WARNING: Clean filler cap before removing. Use only _____ fluid from a sealed container.'' (Inserting the recommended type of brake fluid as specified in 49 CFR 571.116, *e.g.*,''DOT 3.'') The lettering shall be:

(a) Permanently affixed, engraved or embossed;

(b) Located so as to be visible by direct view, either on or within 100 mm (3.94 inches) of the brake fluid reservoir filler plug or cap; and

(c) Of a color that contrasts with its background, if it is not engraved or embossed.

S5.4.4. *Fluid level indication.* Brake fluid reservoirs shall be so constructed that the level of fluid can be checked without need for the reservoir to be opened. This requirement is deemed to have been met if the vehicle is equipped with a transparent brake fluid reservoir or a brake fluid level indicator meeting the requirements of S5.5.1(a)(1).

S5.5. *Brake system warning indicator.* Each vehicle shall have one or more visual brake system warning indicators, mounted in front of and in clear view of the driver, which meet the requirements of S5.5.1 through S5.5.5. In addition, a vehicle manufactured without a split service brake system shall be equipped with an audible warning signal that activates under the conditions specified in S5.5.1(a).

S5.5.1. *Activation.* An indicator shall be activated when the ignition (start) switch is in the ''on'' (''run'') position and whenever any of conditions (a), (b), (c) or (d) occur:

(a) A gross loss of fluid or fluid pressure (such as caused by rupture of a brake line but not by a structural failure of a housing that is common to two or more subsystems) as indicated by one of the following conditions (chosen at the option of the manufacturer):

(1) A drop in the level of the brake fluid in any master cylinder reservoir compartment to less than the recommended safe level specified by the manufacturer or to one-fourth of the fluid capacity of that reservoir compartment, whichever is greater.

(2) For vehicles equipped with a split service brake system, a differential pressure of 1.5 MPa (218 psi) between the intact and failed brake subsystems measured at a master cylinder outlet or a slave cylinder outlet.

(3) A drop in the supply pressure in a brake power unit to one-half of the normal system pressure.

(b) Any electrical functional failure in an antilock or variable brake proportioning system.

(c) Application of the parking brake.

(d) Brake lining wear-out, if the manufacturer has elected to use an electrical device to provide an optical warning to meet the requirements of S5.1.2(a).

S5.5.2. *Function check.*

(a) All indicators shall be activated as a check function by either:

(1) Automatic activation when the ignition (start) switch is turned to the ''on'' (''run'') position when the engine is not running, or when the ignition (''start'') switch is in a position between ''on'' (''run'') and ''start'' that is designated by the manufacturer as a check position, or

(2) A single manual action by the driver, such as momentary activation of a test button or switch mounted on the instrument panel in front of and in clear view of the driver, or, in the case of an indicator for application of the parking brake, by applying the parking brake when the ignition is in the ''on'' (''run'') position.

(b) In the case of a vehicle that has an interlock device that prevents the engine from being started under one or more conditions, check functions meeting the requirements of S5.5.2(a) need not be operational under any condition in which the engine cannot be started.

(c) The manufacturer shall explain the brake check function test procedure in the owner's manual.

S5.5.3. *Duration.* Each indicator activated due to a condition specified in S5.5.1 shall remain activated as long as the condition exists, whenever the ignition (''start'') switch is in the ''on'' (''run'') position, whether or not the engine is running.

S5.5.4. *Function.* When a visual warning indicator is activated, it may be continuous or flashing, except that the visual warning indicator on a vehicle not equipped with a split service brake system shall be flashing. The audible warning required for a vehicle manufactured without a split service brake system may be continuous or intermittent.

S5.5.5. *Labeling.*

(a) Each visual indicator shall display a word or words in accordance with the requirements of Standard No. 101 (49 CFR 571.101) and this section, which shall be legible to the driver under all daytime and nighttime conditions when activated. Unless otherwise specified, the words shall have letters not less than 3.2 mm (⅛ inch) high and the letters and background shall be of contrasting colors, one of which is red. Words or symbols in addition to those required by Standard No. 101 and this section may be provided for purposes of clarity.

(b) Vehicles manufactured with a split service brake system may use a common brake warning indicator to indicate two or more of the functions described in S5.5.1(a) through S5.5.1(d). If a common indicator is used, it shall display the word ''Brake.''

(c) A vehicle manufactured without a split service brake system shall use a separate indicator to indicate the failure condition in S5.5.1(a). This indicator shall display the words ''STOP—BRAKE FAILURE'' in block capital letters not less than 6.4 mm (¼ inch) in height.

(d) If separate indicators are used for one or more than one of the functions described in S5.5.1(a) to S5.5.1(d), the indicators shall display the following wording:

(1) If a separate indicator is provided for the low brake fluid condition in S5.5.1(a)(1), the words ''Brake Fluid'' shall be used except for vehicles using hydraulic system mineral oil.

(2) If a separate indicator is provided for the gross loss of pressure condition in S5.5.1(a)(2), the words ''Brake Pressure'' shall be used.

(3) If a separate indicator is provided for the condition specified in S5.5.1(b), the letters and background shall be of contrasting colors, one of which is yellow. The indicator shall be labeled with the words ''Antilock'' or ''Anti-lock'' or ''ABS''; or ''Brake Proportioning,'' in accordance with Table 2 of Standard No. 101.

(4) If a separate indicator is provided for application of the parking brake as specified for S5.5.1(c), the single word ''Park'' or the words ''Parking Brake'' may be used.

(5) If a separate indicator is provided to indicate brake lining wear-out as specified in S5.5.1(d), the words ''Brake Wear'' shall be used.

(6) If a separate indicator is provided for any other function, the display shall include the word ''Brake'' and appropriate additional labeling.

S5.6. *Brake system integrity.* Each vehicle shall meet the complete performance requirements of this standard without:

(a) Detachment or fracture of any component of the braking system, such as brake springs and brake shoes or disc pad facings other than minor cracks that do not impair attachment of the friction facings. All mechanical components of the braking system shall be intact and functional. Friction facing tearout (complete detachment of lining) shall not exceed 10 percent of the lining on any single frictional element.

(b) Any visible brake fluid or lubricant on the friction surface of the brake, or leakage at the master cylinder or brake power unit reservoir cover, seal, and filler openings.

S6. *General test conditions.* Each vehicle must meet the performance requirements specified in S7 under the following test conditions and in accordance with the test procedures and test sequence specified. Where a range of conditions is specified, the vehicle must meet the requirements at all points within the range.

S6.1. *Ambient conditions.*

S6.1.1. *Ambient temperature.* The ambient temperature is any temperature between O °C (32 °F) and 40 °C (104 °F).

S6.1.2. *Wind speed.* The wind speed is not greater than 5 m/s (11.2 mph).

S6.2. *Road test surface.*

S6.2.1. *Pavement friction.* Unless otherwise specified, the road test surface produces a peak friction coefficient (PFC) of 0.9 when measured using an American Society for Testing and Materials (ASTM) E1136 standard reference test tire, in accordance with ASTM Method E 1337–90, at a speed of 64.4 km/h (40 mph), without water delivery.

S6.2.2. *Gradient.* Except for the parking brake gradient holding test, the test surface has no more than a 1% gradient in the direction of testing and no more than a 2% gradient perpendicular to the direction of testing.

S6.2.3. *Lane width.* Road tests are conducted on a test lane 3.5 m (11.5 ft) wide.

S6.3. *Vehicle conditions.*

S6.3.1. *Vehicle weight.*

S6.3.1.1. For the tests at GVWR, the vehicle is loaded to its GVWR such that the weight on each axle as measured at the tire-ground interface is in proportion to its GAWR, with the fuel tank filled to 100% of capacity. However, if the weight on any axle of a vehicle at LLVW exceeds the axle's proportional share of the GVWR, the load required to reach GVWR is placed so that the weight on that axle remains the same as at LLVW.

S6.3.1.2. For the test at LLVW, the vehicle is loaded to its LLVW such that the added weight is distributed in the front passenger seat area.

S6.3.2. *Fuel tank loading.* The fuel tank is filled to 100% of capacity at the beginning of testing and may not be less than 75% of capacity during any part of the testing.

S6.3.3. *Lining preparation.* At the beginning of preparation for the road tests, the brakes of the vehicle are in the same condition as when the vehicle was manufactured. No burnishing or other special preparation is allowed, unless all vehicles sold to the public are similarly prepared as a part of the manufacturing process.

S6.3.4. *Adjustments and repairs.* These requirements must be met without replacing any brake system parts or making any adjustments to the brake system except as specified in this standard. Where brake adjustments are specified (S7.1.3), adjust the brakes, including the parking brakes, in accordance with the manufacturer's recommendation. No brake adjustments are allowed during or between subsequent tests in the test sequence.

S6.3.5. *Automatic brake adjusters.* Automatic adjusters are operational throughout the entire test sequence. They may be adjusted either manually or by other means, as recommended by the manufacturer, only prior to the beginning of the road test sequence.

S6.3.6. *Antilock brake system (ABS).* If a car is equipped with an ABS, the ABS is fully operational for all tests, except where specified in the following sections.

S6.3.7. *Variable brake proportioning valve.* If a car is equipped with a variable brake proportioning system, the proportioning valve is fully operational for all tests except the test for failed variable brake proportioning system.

S6.3.8. *Tire inflation pressure.* Tires are inflated to the pressure recommended by the vehicle manufacturer for the GVWR of the vehicle.

S6.3.9. *Engine.* Engine idle speed and ignition timing are set according to the manufacturer's recommendations. If the vehicle is equipped with an adjustable engine speed governor, it is adjusted according to the manufacturer's recommendations.

S6.3.10. *Vehicle openings.* All vehicle openings (doors, windows, hood, trunk, convertible top, cargo doors, etc.) are closed except as required for instrumentation purposes.

S6.4. *Instrumentation.*

S6.4.1. *Brake temperature measurement.* The brake temperature is measured by plug-type thermocouples installed in the approximate center of the facing length and width of the most heavily loaded shoe or disc pad, one per brake, as shown in Figure 1. A second thermocouple may be installed at the beginning of the test sequence if the lining wear is expected to reach a point causing the first thermocouple to contact the metal rubbing surface of a drum or rotor. For center-grooved shoes or pads, thermocouples are installed within 3 mm (.12 in) to 6 mm (.24 in) of the groove and as close to the center as possible.

S6.4.2. *Brake line pressure measurement for the torque wheel test.* The vehicle shall be fitted with pressure transducers in each hydraulic circuit. On hydraulically proportioned circuits, the pressure transducer shall be downstream of the operative proportioning valve.

S6.4.3. *Brake torque measurement for the torque wheel test.* The vehicle shall be fitted with torque wheels at each wheel position, including slip ring assemblies and wheel speed indicators to permit wheel lock to be detected.

BILLING CODE 4910–59–P

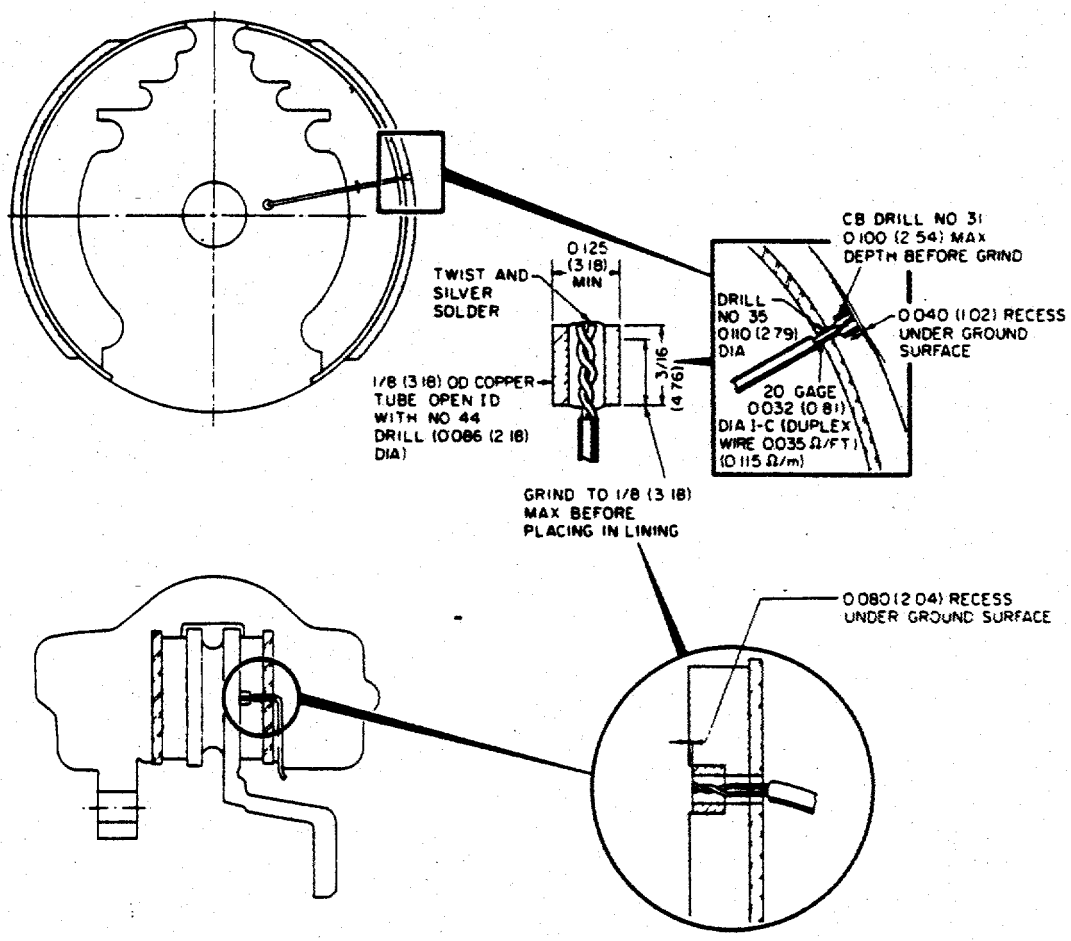

DIMENSIONS ARE IN (mm)

Figure 1–Typical Plug-Type Thermocouple Installations

S6.5. *Procedural conditions.*

S6.5.1. *Brake control.* All service brake system performance requirements, including the partial system requirements of S7.7, S7.10 and S7.11, must be met solely by use of the service brake control.

S6.5.2. *Test speeds.* If a vehicle is incapable of attaining the specified normal test speed, it is tested at a speed that is a multiple of 5 km/h (3.1 mph) that is 4 to 8 km/h (2.5 to 5.0 mph) less than its maximum speed and its performance must be within a stopping distance given by the formula provided for the specific requirement.

S6.5.3. *Stopping distance.*

S6.5.3.1. The braking performance of a vehicle is determined by measuring the stopping distance from a given initial speed.

S6.5.3.2. Unless otherwise specified, the vehicle is stopped in the shortest distance achievable (best effort) on all stops. Where more than one stop is required for a given set of test conditions, a vehicle is deemed to comply with the corresponding stopping distance requirements if at least one of the stops is made within the prescribed distance.

S6.5.3.3. In the stopping distance formulas given for each applicable test (such as $S=0.10V+0.0060V^2$), S is the maximum stopping distance in meters, and V is the test speed in km/h.

S6.5.4. *Vehicle position and attitude.*

S6.5.4.3. The vehicle is aligned in the center of the lane at the start of each brake application. Steering corrections are permitted during each stop.

S6.5.4.2. Stops are made without any part of the vehicle leaving the lane and without rotation of the vehicle about its vertical axis of more than ±15° from the center line of the test lane at any time during any stop.

S6.5.5. *Transmission selector control.*

S6.5.5.1. For tests in neutral, a stop or snub is made in accordance with the following procedures:

(a) Exceed the test speed by 6 to 12 km/h (3.7 to 7.5 mph);

(b) Close the throttle and coast in gear to approximately 3 km/h (1.9 mph) above the test speed;

(c) Shift to neutral; and

(d) When the test speed is reached, apply the brakes.

S6.5.5.2. For tests in gear, a stop or snub is made in accordance with the following procedures:

(a) With the transmission selector in the control position recommended by the manufacturer for driving on a level surface at the applicable test speed, exceed the test speed by 6 to 12 km/h (3.7 to 7.5 mph);

(b) Close the throttle and coast in gear; and

(c) When the test speed is reached apply the brakes.

(d) To avoid engine stall, a manual transmission may be shifted to neutral (or the clutch disengaged) when the vehicle speed is below 30 km/h (18.6 mph).

S6.5.6. *Initial brake temperature (IBT).* If the lower limit of the specified IBT for the first stop in a test sequence (other than a parking brake grade holding test) has not been reached, the brakes are heated to the IBT by making one or more brake applications from a speed of 50 km/h (31.1 mph), at a deceleration rate not greater than 3 m/s² (9.8 fps²).

S7. *Road test procedures and performance requirements.* Each vehicle shall meet all the applicable requirements of this section, when tested according to the conditions and procedures set forth below and in S6, in the sequence specified in Table 1.

TABLE 1.—ROAD TEST SCHEDULE

Testing order	Section No.
Vehicle loaded to GVWR:	
1 Burnish	S7.1
2 Wheel lock sequence	S7.2
Vehicle loaded to LLVW:	
3 Wheel lock sequence	S7.2
4 ABS performance	S7.3
5 Torque wheel	S7.4
Vehicle laded to GVWR:	
6 Torque wheel	S7.4
7 Cold effectiveness	S7.5
8 High speed effectiveness	S7.6
9 Stops with engine off	S7.7
Vehicle loaded to LLVW:	
10 Cold effectiveness	S7.5
11 High speed effectiveness	S7.6
12 Failed antilock	S7.8
13 Failed proportioning valve	S7.9
14 Hydraulic circuit failure	S7.10
Vehicle loaded to GVWR:	
15 Hydraulic circuit failure	S7.10
16 Failed antilock	S7.8
17 Failed proportioning valve	S7.9
18 Power brake unit failure	S7.11
19 Parking brake—static	S7.12
20 Parking brake—dynamic	S7.13
21 Heating snubs	S7.14
22 Hot performance	S7.15
23 Brake cooling	S7.16
24 Recovery performance	S7.17
25 Final inspection	S7.18

S7.1. Burnish.

S7.1.1. *General information.* Any pretest instrumentation checks are conducted as part of the burnish procedure, including any necessary rechecks after instrumentation repair, replacement or adjustment. Instrumentation check test conditions must be in accordance with the burnish test procedure specified in S7.1.2 and S7.1.3.

S7.1.2. *Vehicle conditions.*

(a) Vehicle load: GVWR only.

(b) Transmission position: In gear.

S7.1.3. *Test conditions and procedures.* The road test surface conditions specified in S6.2 do not apply to the burnish procedure.

(a) IBT: 100 °C (212 °F).

(b) Test speed: 80 km/h (49.7 mph).

(c) Pedal force: Adjust as necessary to maintain specified constant deceleration rate.

(d) Deceleration rate: Maintain a constant deceleration rate of 3.0 m/s² (9.8 fps²).

(e) Wheel lockup: No lockup of any wheel allowed for longer than 0.1 seconds at speeds greater than 15 km/h (9.3 mph).

(f) Number of runs: 200 stops.

(g) Interval between runs: The interval from the start of one service brake application to the start of the next is either the time necessary to reduce the IBT to 100 °C (212 °F) or less, or the distance of 2 km (1.24 miles), whichever occurs first.

(h) Accelerate to 80 km/h (49.7 mph) after each stop and maintain that speed until making the next stop.

(i) After burnishing, adjust the brakes as specified in S6.3.4.

S7.2 *Wheel lockup sequence.*

S7.2.1 *General information.*

(a) The purpose of this test is to ensure that lockup of both front wheels occurs either simultaneously with, or at a lower deceleration rate than, the lockup of both rear wheels, when tested on road surfaces affording adhesion such that wheel lockup of the first axle occurs at a braking ratio of between 0.15 and 0.80, inclusive.

(b) This test is for vehicles without antilock brake systems.

(c) This wheel lock sequence test is to be used as a screening test to evaluate a vehicle's axle lockup sequence and to determine whether the torque wheel test in S7.4 must be conducted.

(d) For this test, a simultaneous lockup of the front and rear wheels refers to the conditions when the time interval between the first occurrence of lockup of the last (second) wheel on the rear axle and the first occurrence of lockup of the last (second) wheel on the front axle is ≤ 0.1 second for vehicle speeds > 15 km/h (9.3 mph).

(e) A front or rear axle lockup is defined as the point in time when the last (second) wheel on an axle locks up.

(f) Vehicles that lock their front axle simultaneously or at lower deceleration rates than their rear axle need not be tested to the torque wheel procedure.

(g) Vehicles which lock their rear axle at deceleration rates lower than the front

axle shall also be tested in accordance with the torque wheel procedure in S7.4.

(h) Any determination of noncompliance for failing adhesion utilization requirements shall be based on torque wheel test results.

S7.2.2 *Vehicle conditions.*

(a) Vehicle load: GVWR and LLVW.

(b) Transmission position: In neutral.

S7.2.3 Test conditions and procedures.

(a) IBT: ≥ 50 °C. (122 °F), ≤ 100 °C, (212 °F).

(b) Test speed: 65 km/h (40.4 mph) for a braking ratio ≤ 0.50; 100 km/h (62.1 mph) for a braking ratio > 0.50.

(c) Pedal force:

(1) Pedal force is applied and controlled by the vehicle driver or by a mechanical brake pedal actuator.

(2) Pedal force is increased at a linear rate such that the first axle lockup occurs no less than one-half (0.5) second and no more than one and one-half (1.5) seconds after the initial application of the pedal.

(3) The pedal is released when the second axle locks, or when the pedal force reaches 1000 N (225 lbs), or 0.1 seconds after first axle lockup, whichever occurs first.

(d) Wheel lockup: Only wheel lockups above a vehicle speed of 15 km/h (9.3 mph) are considered in determining the results of this test.

(e) Test surfaces: This test is conducted, for each loading condition, on two different test surfaces that will result in a braking ratio of between 0.15 and 0.80, inclusive. NHTSA reserves the right to choose the test surfaces to be used based on adhesion utilization curves or any other method of determining ''worst case'' conditions.

(f) The data recording equipment shall have a minimum sampling rate of 40 Hz.

(g) Data to be recorded. The following information must be automatically recorded in phase continuously throughout each test run such that values of the variables can be cross referenced in real time.

(1) Vehicle speed.

(2) Brake pedal force.

(3) Angular velocity at each wheel.

(4) Actual instantaneous vehicle deceleration or the deceleration calculated by differentiation of the vehicle speed.

(h) Speed channel filtration. For analog instrumentation, the speed channel shall be filtered by using a low-pass filter having a cut-off frequency of less than one fourth the sampling rate.

(i) Test procedure. For each test surface, three runs meeting the pedal force application and time for wheel lockup requirements shall be made. Up to a total of six runs will be allowed to obtain three valid runs. Only the first three valid runs obtained shall be used for data analysis purposes.

S7.2.4. *Performance requirements.*

(a) In order to pass this test a vehicle shall be capable of meeting the test requirements on all test surfaces that will result in a braking ratio of between 0.15 and 0.80, inclusive.

(b) If all three valid runs on each surface result in the front axle locking before or simultaneously with the rear axle, or the front axle locks up with only one or no wheels locking on the rear axle, the torque wheel procedure need not be run, and the vehicle is considered to meet the adhesion utilization requirements of this Standard. This performance requirement shall be met for all vehicle braking ratios between 0.15 and 0.80.

(c) If any one of the three valid runs on any surface results in the rear axle locking before the front axle or the rear axle locks up with only one or no wheels locking on the front axle the torque wheel procedure shall be performed. This performance requirement shall be met for all vehicle braking ratios between 0.15 and 0.80.

(d) If any one of the three valid runs on any surface results in neither axle locking (*i.e.*, only one or no wheels locked on each axle) before a pedal force of 1000 N (225 lbs) is reached, the vehicle shall be tested to the torque wheel procedure.

(e) If the conditions listed in paragraph (c) or (d) of this section occur, vehicle compliance shall be determined from the results of a torque wheel test performed in accordance with S7.4.

S7.3. *ABS performance. [Reserved.]*

S7.4. *Adhesion utilization (Torque Wheel Method).*

S7.4.1. *General information.* This test is for vehicles without any ABS. The purpose of the test is to determine the adhesion utilization of a vehicle.

S7.4.2. *Vehicle conditions.*

(a) Vehicle load: GVWR and LLVW.

(b) Transmission position: In neutral.

(c) Tires: For this test, a separate set of tires, identical to those used for all other tests under Section 7.0, may be used.

S7.4.3. *Test conditions and procedures.*

(a) IBT: ≥ 50°C (122°F), ≤ 100 °C (212°F).

(b) Test speeds: 100 km/h (62.1 mph), and 50 km/h (31.1 mph).

(c) Pedal force: Pedal force is increased at a linear rate between 100 and 150 N/sec (22.5 and 33.7 lbs/sec) for the 100 km/h test speed, or between 100 and 200 N/sec (22.5 and 45.0 lbs/sec) for the 50 km/h test speed, until the first axle locks or until a pedal force of 1 kN (225 lbs) is reached, whichever occurs first.

(d) Cooling: Between brake applications, the vehicle is driven at speeds up to 100 km/h (62.1 mph) until the IBT specified in S7.4.3(a) is reached.

(e) Number of runs: With the vehicle at GVWR, run five stops from a speed of 100 km/h (62.1 mph) and five stops from a speed of 50 km/h (31.1 mph), while alternating between the two test speeds after each stop. With the vehicle at LLVW, repeat the five stops at each test speed while alternating between the two test speeds.

(f) Test surface: PFC of at least 0.9.

(g) Data to be recorded. The following information must be automatically recorded in phase continuously throughout each test run such that values of the variables can be cross referenced in real time:

(1) Vehicle speed.

(2) Brake pedal force.

(3) Angular velocity at each wheel.

(4) Brake torque at each wheel.

(5) Hydraulic brake line pressure in each brake circuit. Hydraulically proportioned circuits shall be fitted with transducers on at least one front wheel and one rear wheel downstream of the operative proportioning or pressure limiting valve(s).

(6) Vehicle deceleration.

(h) Sample rate: All data acquisition and recording equipment shall support a minimum sample rate of 40 Hz on all channels.

(i) Determination of front versus rear brake pressure. Determine the front versus rear brake pressure relationship over the entire range of line pressures. Unless the vehicle has a variable brake proportioning system, this determination is made by static test. If the vehicle has a variable brake proportioning system, dynamic tests are run with the vehicle both empty and loaded. 15 snubs from 50 km/h (31.1 mph) are made for each of the two load conditions, using the same initial conditions specified in this section.

S7.4.4. *Data reduction.*

(a) The data from each brake application under S7.4.3 is filtered using a five-point, on-center moving average for each data channel.

(b) For each brake application under S7.4.3 determine the slope (brake factor) and pressure axis intercept (brake hold-off pressure) of the linear least squares equation best describing the measured torque output at each braked wheel as a function of measured line pressure applied at the same wheel. Only torque output values obtained from data collected when the vehicle deceleration

is within the range of 0.15g at 0.80g are used in the regression analysis.

(c) Average the results of paragraph (b) of this section to calculate the average brake factor and brake hold-off pressure for all brake applications for the front axle.

(d) Average the results of paragraph (b) of this section to calculate the average brake factor and brake hold-off pressure for all brake applications for the rear axle.

(e) Using the relationship between front and rear brake line pressure determined in S7.4.3(i) and the tire rolling radius, calculate the braking force at each axle as a function of front brake line pressure.

(f) Calculate the braking ratio of the vehicle as a function of the front brake line pressure using the following equation:

$$z = \frac{T_1 + T_2}{P}$$

where z = braking ratio at a given front line pressure;

T_1, T_2 = Braking forces at the front and rear axles, respectively, corresponding to the same front brake line pressure, and

P = total vehicle weight.

(g) Calculate the adhesion utilized at each axle as a function of braking ratio using the following equations:

$$f_1 = \frac{T_1}{P_1 + zhP / E}$$

$$f_2 = \frac{T_2}{P_2 - zhP / E}$$

where f_i = adhesion utilized by axle i

T_i = braking force at axle i (from (e))

P_i = static weight on axle i

i = 1 for the front axle, or 2 for the rear axle

z = braking ratio (from (f))

h = height of center of gravity of the vehicle

P = total vehicle weight

E = wheelbase

(h) plot f_1 and f_2 obtained in (g) as a function of z, for both GVWR and LLVW load conditions. These are the adhesion utilization curves for the vehicles, which are compared to the performance requirements in S7.4.5, shown graphically in Figure 2.

BILLING CODE 4910–59–P

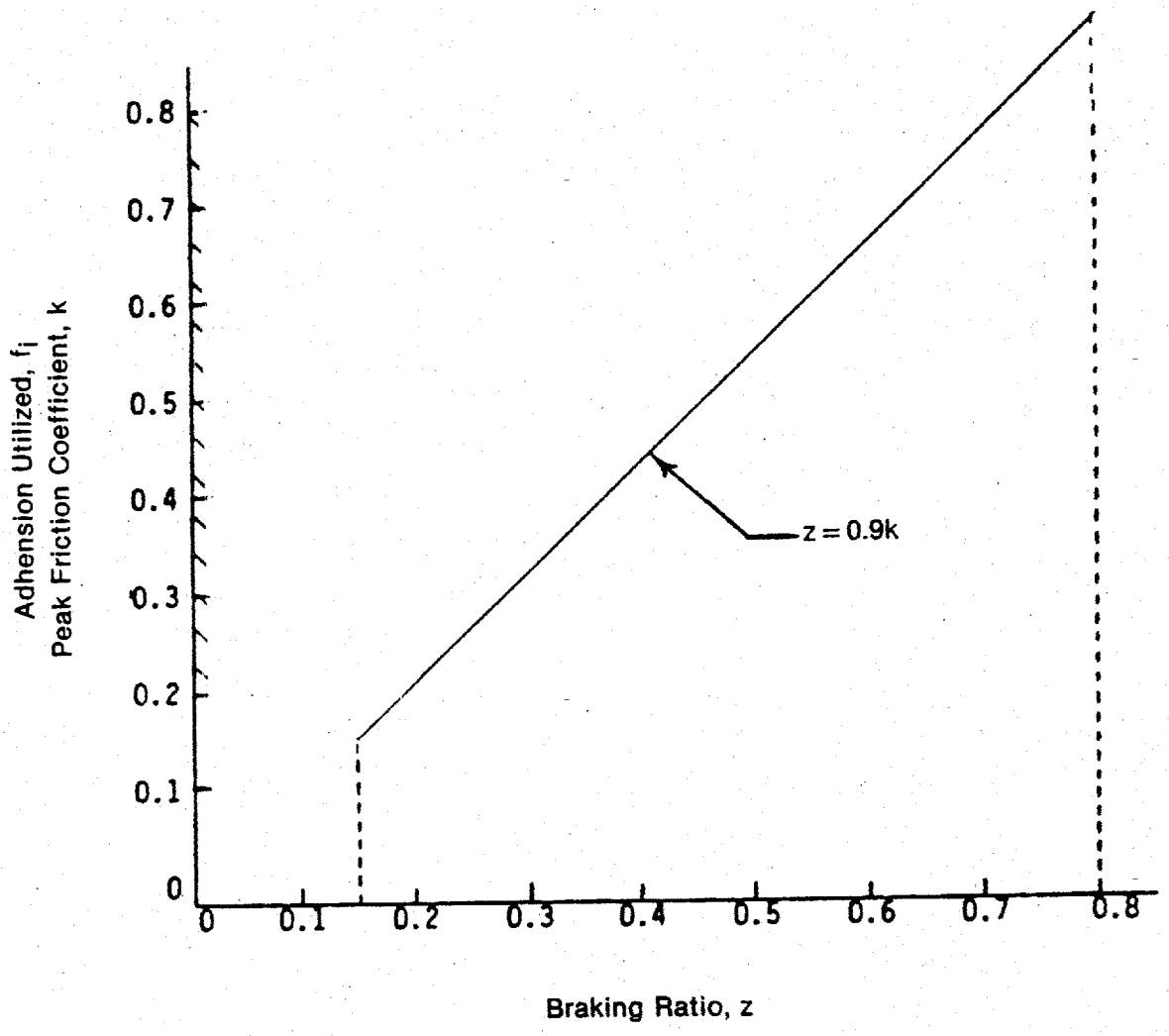

Figure 2–Adhesion Utilization Requirements

4910–59–C

S7.4.5. *Performance requirements.* For all braking ratios between 0.15 and 0.60, each adhesion utilization curve for a rear axle shall be situated below a line defined by z = 0.9k where z is the braking ratio and k is the PFC.

S7.5. *Cold effectiveness.*

S7.5.1. *Vehicle conditions.*

(a) Vehicle load: GVWR and LLVW.

(b) Transmission position: In neutral.

S7.5.2. *Test conditions and procedures.*

(a) IBT: > 50°C (122°F), < 100°C (212°F).

(b) Test speed: 100 km/h (62.1 mph).

(c) Pedal force: > 65N (14.6 lbs), < 500 N (112.4 lbs).

(d) Wheel lockup: No lockup of any wheel for longer than 0.1 seconds allowed at speeds greater than 15 km/h (9.3 mph).

(e) Number of runs: 6 stops.

(f) Test surface: PFC of 0.9.

(g) For each stop, bring the vehicle to test speed and then stop the vehicle in the shortest possible distance under the specified conditions.

S7.5.3. *Performance requirements.*

(a) Stopping distance for 100 km/h test speed: < 70 m (230 ft).

(b) Stopping distance for reduced test speed: $S < 0.10V + 0.0060V^2$.

S7.6. *High speed effectiveness.* This test is not run if vehicle maximum speed is less than or equal to 125 km/h (77.7 mph).

S7.6.1. *Vehicle conditions.*

(a) Vehicle load: GVWR and LLVW.

(b) Transmission position: In gear.

S7.6.2. *Test conditions and procedures.*

(a) IBT: > 50°C (122°F), < 100°C (212°F).

(b) Test speed: 80% of vehicle maximum speed if 125 km/h (77.7 mph) < vehicle maximum speed < 200 km/h (124.3 mph), or 160 km/h (99.4 mph) if vehicle maximum speed ≥ 200 km/h (124.3 mph).

(c) Pedal force: > 65 N (14.6 lbs), < 500 N (112.4 lbs).

(d) Wheel lockup: No lockup of any wheel for longer than 0.1 seconds allowed at speeds greater than 15 km/h (9.3 mph).

(e) Number of runs: 6 stops.

(f) Test surface: PFC of 0.9.

S7.6.3. *Performance requirements.*

Stopping distance: $S < 0.10V + 0.0067V^2$.

S7.7. *Stops with Engine Off.*

S7.7.1. *General information.* This test is for vehicles equipped with one or more brake power units or brake power assist units.

S7.7.2. *Vehicle conditions.*

(a) Vehicle load: GVWR only.

(b) Transmission position: In neutral.

(c) Vehicle engine: Off (not running).

(d) Ignition key position: May be returned to ''on'' position after turning engine off, or a device may be used to ''kill'' the engine while leaving the ignition key in the ''on'' position.

S7.7.3. *Test conditions and procedures.*

(a) IBT: ≥ 50°C (122°F), ≤ 100°C (212°F).

(b) Test speed: 100 km/h (62.1 mph).

(c) Pedal force: ≥ 65 N (14.6 lbs), ≤ 500 N (122.4 lbs).

(d) Wheel lockup: No lockup of any wheel allowed for longer than 0.1 seconds at speeds greater than 15 km/h (9.3 mph).

(e) Number of runs: 6 stops.

(f) Test surface: PFC of 0.9.

(g) All system reservoirs (brake power and/or assist units) are fully charged and the vehicle's engine is off (not running) at the beginning of each stop.

S7.7.4. *Performance requirements.*

(a) Stopping distance for 100 km/h test speed: ≤70m (230 ft.)

(b) Stopping distance for reduced test speed: $S \leq 0.10V + 0.0060V^2$.

S7.8. *Antilock functional failure.*

S7.8.1. *Vehicle conditions.*

(a) Vehicle loading: LLVW and GVWR.

(b) Transmission position: In neutral.

S7.8.2. *Test conditions and procedures.*

(a) IBT: ≥ 50°C (122°F), ≤ 100°C (212°F).

(b) Test speed: 100 km/h (62.1 mph).

(c) Pedal force: ≥ 65 N (14.6 lbs), ≤ 500 N (112.4 lbs).

(d) Wheel lockup: No lockup of any wheel for more than 0.1 seconds allowed at speeds greater than 15 km/h (9.3 mph).

(e) Number of runs: 6 stops.

(f) Test surface: PFC of 0.9.

(g) Functional failure simulation:

(1) Disconnect the functional power source, or any other electrical connector that creates a functional failure.

(2) Determine whether the brake system indicator is activated when any electrical functional failure of the antilock system is created.

(3) Restore the system to normal at the completion of this test.

(h) If more than one antilock brake subsystem is provided, repeat test for each subsystem.

S7.8.3. *Performance requirements.*

For service brakes on a vehicle equipped with one or more antilock systems, in the event of any single functional failure in any such system, the service brake system shall continue to operate and shall stop the vehicle as specified in S7.8.3(a) or S7.8.3(b).

(a) Stopping distance for 100 km/h test speed: ≤ 85 m (279 ft).

(b) Stopping distance for reduced test speed: $S \leq 0.10V + 0.0075V^2$.

S7.9. *Variable brake proportioning system functional failure.*

S7.9.1. *Vehicle conditions.*

(a) Vehicle load: LLVW and GVWR.

(b) Transmission position: In neutral.

S7.9.2. *Test conditions and procedures.*

(a) IBT: ≥ 50°C (122°F), ≤ 100°C (212°F).

(b) Test speed: 100 km/h (62.1 mph).

(c) Pedal force: ≥ 65 N (14.6 lbs), ≤ 500 N (112.4 lbs).

(d) Wheel lockup: No lockup of any wheel for longer than 0.1 seconds allowed at speeds greater than 15 km/h (9.3 mph).

(e) Number of runs: 6 stops.

(f) Test surface: PFC of 0.9.

(g) Functional failure simulation:

(1) Disconnect the functional power source or mechanical linkage to render the variable brake proportioning system inoperative.

(2) If the system utilizes electrical components, determine whether the brake system indicator is activated when any electrical functional failure of the variable proportioning system is created.

(3) Restore the system to normal at the completion of this test.

(h) If more than one variable brake proportioning subsystem is provided, repeat the test for each subsystem.

S7.9.3. *Performance requirements.* The service brakes on a vehicle equipped with one or more variable brake proportioning systems, in the event of any single function failure in any such system, shall continue to operate and shall stop the vehicle as specified in S7.9.3(a) and S7.9.3(b).

(a) Stopping distance for 100 km/h test speed: ≤ 110 m (361 ft).

(b) Stopping distance for reduced test speed: $S \leq 0.10V + 0.0100V^2$.

S7.10. *Hydraulic circuit failure.*

S7.10.1. *General information.* This test is for vehicles manufactured with our without a split service brake system.

S7.10.2. *Vehicle conditions.*

(a) Vehicle load: LLVW and GVWR.

(b) Transmission position: In neutral.

S7.10.3. *Test conditions and procedures.*

(a) IBT: ≥ 50 °C (122 °F), ≤ 100 °C (212°F).

(b) Test speed: 100 km/h (62.1 mph).

(c) Pedal force: ≥ 65 N (14.6 lbs), ≤ 500 N (122.4 lbs).

(d) Wheel lockup: No lockup of any wheel for longer than 0.1 seconds allowed at speeds greater than 15 km/h (9.3 mph).

(e) Test surface: PFC of 0.9.

(f) Alter the service brake system to produce any one rupture or leakage type of failure other than structural failure of a housing that is common to two or more subsystems.

(g) Determine the control force pressure level or fluid level (as appropriate for the indicator being tested) necessary to activate the brake warning indicator.

(h) Number of runs: After the brake warning indicator has been activated, make the following stops depending on the type of brake system:

(1) 4 stops for a split service brake system.

(2) 10 consecutive stops for a non-split service brake system.

(i) Each stop is made by a continuous application of the service brake control.

(j) Restore the service brake system to normal at the completion of this test.

(k) Repeat the entire sequence for each of the other subsystems.

S7.10.4. *Performance requirements.*

For vehicles manufactured with a split service brake system, in the event of any rupture or leakage type of failure in a single subsystem, other than a structural failure of a housing that is common to two or more subsystems, and after activation of the brake system indicator as specified in S5.5.1, the remaining portions of the service brake system shall continue to operate and shall stop the vehicle as specified in S7.10.4(a) or S7.10.4(b). For vehicles not manufactured with a split service brake system, in the event of any one rupture or leakage type of failure in any component of the service brake system and after activation of the brake system indicator as specified in S5.5.1, the vehicle shall by operation of the service brake control stop 10 times consecutively as specified in S7.10.4(a) or S7.10.4(b).

(a) Stopping distance from 100 km/h test speed: ≤ 168 m (551 ft).

(b) Stopping distance for reduced test speed: $S \leq 0.10V + 0.0158V^2$.

S7.11. *Power brake unit or brake power assist unit inoperative (System depleted).*

S7.11.1. *General information.* This test is for vehicles equipped with one or more brake power units or brake power assist units.

S7.11.2. *Vehicle conditions.*

(a) Vehicle load: GVWR only.

(b) Transmission position: In neutral.

S7.11.3. *Test conditions and procedures.*

(a) IBT: ≥ 50°C (122°F), ≤ 100°C (212°F).

(b) Test speed: 100 km/h (62.1 mph).

(c) Pedal force: ≥ 65 N (14.6 lbs), ≤ 500 N (112.4 lbs).

(d) Wheel lockup: No lockup of any wheel for longer than 0.1 seconds allowed at speeds greater than 15 km/h (9.3 mph).

(e) Number of runs: 6 stops.

(f) Test surface: PFC of 0.9.

(g) Disconnect the primary source of power for one brake power assist unit or brake power unit, or one of the brake power unit or brake power assist unit subsystems if two or more subsystems are provided.

(h) If the brake power unit or power assist unit operates in conjunction with a backup system and the backup system of a primary power service failure, the backup system is operative during this test.

(i) Exhaust any residual brake power reserve capability of the disconnected system.

(j) Make each of the 6 stops by a continuous application of the service brake control.

(k) Restore the system to normal at completion of this test.

(l) For vehicles equipped with more than one brake power unit or brake power assist unit, conduct tests for each in turn.

S7.11.4. *Performance requirements.*

The service brakes on a vehicle equipped with one or more brake power assist units or brake power units, with one such unit inoperative and depleted of all reserve capability, shall stop the vehicle as specified in S7.11.4(a) or S7.11.4(b).

(a) Stopping distance from 100 km/h test speed: ≤ 168 m (551 ft).

(b) Stopping distance for reduced test speed: $S \leq 0.10V + 0.0158V^2$.

S7.12. *Parking brake—Static test.*

S7.12.1. *Vehicle conditions.*

(a) Vehicle load: GVWR only.

(b) Transmission position: In neutral.

(c) Parking brake burnish:

(1) For vehicles with parking brake systems not utilizing the service friction elements, the friction elements of such a system are burnished prior to the parking brake test according to the published recommendations furnished to the purchaser by the manufacturer.

(2) If no recommendations are furnished, the vehicle's parking brake system is tested in an unburnished condition.

S7.12.2. *Test conditions and procedures.*

(a) IBT:

(1) Parking brake systems utilizing service brake friction materials shall be tested with the IBT ≤ 100°C (212°F) and shall have no additional burnishing or artificial heating prior to the start of the parking brake test.

(2) Parking brake systems utilizing non-service brake friction materials shall be tested with the friction materials at ambient temperature at the start of the test. The friction materials shall have no additional burnishing or artificial heating prior to or during the parking brake test.

(b) Parking brake control force: Hand control ≤ 400 N (89.9 lbs); foot control ≤ 500 N (112.4 lbs).

(c) Hand force measurement locations: The force required for actuation of a hand-operated brake system is measured at the center of the hand grip area or at a distance of 40 mm (1.57 in) from the end of the actuation lever as illustrated in Figure 3.

BILLING CODE 4910–59–P

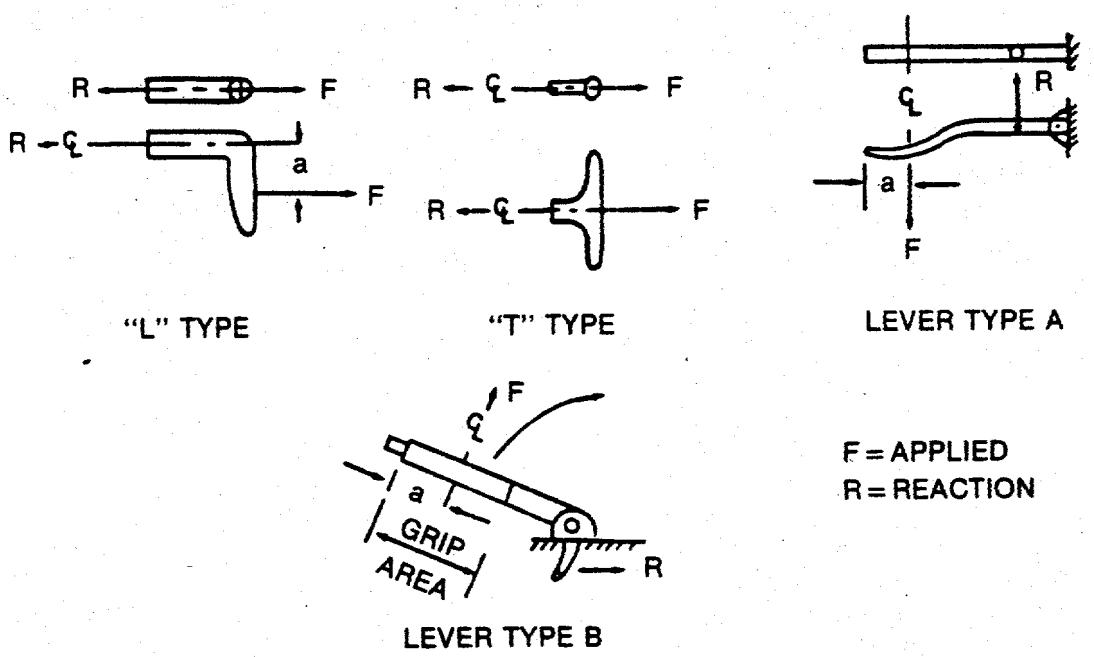

Dimension a = 40 mm (1.57in)

Figure 3-Location for Measuring Brake Application Force (Hand Brake)

BILLING CODE 4910–59–C

(d) Parking brake applications: 1 apply and 2 reapply if necessary.

(e) Test surface gradient: 20% grade.

(f) Drive the vehicle onto the grade with the longitudinal axis of the vehicle in the direction of the slope of the grade.

(g) Stop the vehicle and hold it stationary by applying the service brake control and place the transmission in neutral.

(h) With the service brake applied sufficiently to just keep the vehicle from rolling, apply the parking brake as specified in S7.12.2(i) or S7.12.2(j).

(i) The parking brake system is actuated by a single application not exceeding the limits specified in S7.12.2(b).

(j) In the case of a parking brake system that does not allow application of the specified force in a single application, a series of applications may be made to achieve the specified force.

(k) Following the application of the parking brakes, release all force on the service brake control and, if the vehicle remains stationary, start the measurement of time.

(l) If the vehicle does not remain stationary, reapplication of a force to the parking brake control at the level specified in S7.12.2(b) as appropriate for the vehicle being tested (without release of the ratcheting or other holding mechanism of the parking brake) is used up to two times to attain a stationary position.

(m) Verify the operation of the parking brake application indicator.

(n) Following observation of the vehicle in a stationary condition for the specified time in one direction, repeat the same test procedure with the vehicle orientation in the opposite direction on the same grade.

S7.12.3. *Performance requirement.* The parking brake system shall hold the vehicle stationary for 5 minutes in both a forward and reverse direction on the grade.

S7.13. *Heating Snubs.*

S7.13.1. *General information.* The purpose of the snubs is to heat up the brakes in preparation for the hot performance test which follows immediately.

S7.13.2. *Vehicle conditions.*

(a) Vehicle load: GVWR only.

(b) Transmission position: In gear.

S7.13.3. *Test conditions and procedures.*

(a) IBT:

(l) Establish an IBT before the first brake application (snub) of ≥ 55°C (131°F), ≥ 65°C (149°F).

(2) IBT before subsequent snubs are those occurring at the distance intervals.

(b) Number of snubs: 15.

(c) Test speeds: The initial speed for each snub is 120 km/h (74.6 mph) or 80% of Vmax, whichever is slower. Each snub is terminated at one-half the initial speed.

(d) Deceleration rate:

(1) Maintain a constant deceleration rate of 3.0 m/s² (9.6 fps²).

(2) Attain the specified deceleration within one second and maintain it for the remainder of the snub.

(e) Pedal force: Adjust as necessary to maintain the specified constant deceleration rate.

(f) Time interval: Maintain an interval of 45 seconds between the start of brake applications (snubs).

(g) Accelerate as rapidly as possible to the initial test speed immediately after each snub.

(h) Immediately after the 15th snub, accelerate to 100 km/h (62.1 mph) and commence the hot performance test.

S7.14. *Hot performance.*

S7.14.1. *General information.* The hot performance test is conducted immediately after completion of the 15th heating snub.

S7.14.2. *Vehicle conditions.*

(a) Vehicle load: GVWR only.

(b) Transmission position: In neutral.

S7.14.3. *Test conditions and procedures.*

(a) IBT: Temperature achieved at completion of heating snubs.

(b) Test speed: 100 km/h (62.1 mph).

(c) Pedal force: (1) The first stop is done with a pedal force not greater than the average pedal force recorded during the shortest GVWR cold effectiveness stop.

(2) The second stop is done with a pedal force not greater than 500 N (112.4 lbs).

(d) Wheel lockup: No lockup of any wheel for longer than 0.1 seconds allowed at speeds greater than 15 km/h (9.3 mph).

(e) Number of runs: 2 stops.

(f) Immediately after the 15th heating snub, accelerate to 100 km/h (62.1 mph) and commence the first stop of the hot performance test.

(g) If the vehicle is incapable of attaining 100 km/h, it is tested at the same speed used for the GVWR cold effectiveness test.

(h) Immediately after completion of the first hot performance stop, accelerate as rapidly as possible to the specified test speed and conduct the second hot performance stop.

(i) Immediately after completion of second hot performance stop, drive 1.5 km (0.98 mi) at 50 km/h (31.1 mph) before the first cooling stop.

S7.14.4. *Performance requirements.*

(a) For the first hot stop, the stopping distance must be less than or equal to a calculated distance which is based on 60 percent of the deceleration actually achieved on the shortest GVWR cold effectiveness stop. The following equations shall be used in calculating the performance requirement:

$$d_c = \frac{0.0386V^2}{S_c - 0.10V}$$

$$S = 0.10V + \frac{0.0386V^2}{0.60(d_c)}$$

where d_c = the average deceleration actually achieved during the shortest cold effectiveness stop at GVWR (m/s²),

S_c = actual stopping distance measured on the shortest cold effectiveness stop at GVWR (m), and

V = cold effectiveness test speed (km/h).

(b) In addition to the requirement in S7.14.4(a), the stopping distance for at least one of the two hot stops must be S ≤ 89 m (292 ft) from a test speed of 100 km/h (62.1 mph) or, for reduced test speed, $S \leq 0.10V + 0.0079V^2$. The results of the second stop may not be used to meet the requirements of S7.14.4(a).

S7.15. *Brake cooling stops.*

S7.15.1. *General information.* The cooling stops are conducted immediately after completion of the hot performance test.

S7.15.2. *Vehicle conditions.*

(a) Vehicle load: GVWR only.

(b) Transmission position: In gear.

S7.15.3. *Test conditions and procedures.*

(a) IBT: Temperature achieved at completion of hot performance.

(b) Test speed: 50 km/h (31.1 mph).

(c) Pedal force: Adjust as necessary to maintain specified constant deceleration rate.

(d) Deceleration rate: Maintain a constant deceleration rate of 3.0 m/s² (9.9 fps²).

(e) Wheel lockup: No lockup of any wheel for longer than 0.1 seconds allowed at speeds greater than 15 km/h (9.3 mph).

(f) Number of runs: 4 stops.

(g) Immediately after the hot performance stops drive 1.5 km (0.93 mi) at 50 km/h (31.1 mph) before the first cooling stop.

(h) For the first through the third cooling stops:

(1) After each stop, immediately accelerate at the maximum rate to 50 km/h (31.1 mph).

(2) Maintain that speed until beginning the next stop at a distance of 1.5 km (0.93 mi) from the beginning of the previous stop.

(i) For the fourth cooling stop:

(1) Immediately after the fourth stop, accelerate at the maximum rate to 100 km/h (62.1 mph).

(2) Maintain that speed until beginning the recovery performance stops at a distance of 1.5 km (0.93 mi) after the beginning of the fourth cooling stop.

S7.16. *Recovery performance.*

S7.16.1. *General information.* The recovery performance test is conducted immediately after completion of the brake cooling stops.

S7.16.2. *Vehicle conditions.*

(a) Vehicle load: GVWR only.

(b) Transmission position: In neutral.

S7.16.3. *Test conditions and procedures.*

(a) IBT: Temperature achieved at completion of cooling stops.

(b) Test speed: 100 km/h (62.1 mph).

(c) Pedal force: The pedal force shall not be greater than the average pedal force recorded during the shortest GVWR cold effectiveness stop.

(d) Wheel lockup: No lockup of any wheel for longer than 0.1 seconds allowed at speeds greater than 15 km/h (9.3 mph).

(e) Number of runs: 2 stops.

(f) Immediately after the fourth cooling stop, accelerate at the maximum rate to 100 km/h (62.1 mph).

(g) Maintain that speed until beginning the first recovery performance stop at a distance of 1.5 km (0.93 mi) after the beginning of the fourth cooling stop.

(h) If the vehicle is incapable of attaining 100 km/h, it is tested at the same speed used for the GVWR cold effectiveness test.

(i) Immediately after completion of the first recovery performance stop accelerate as rapidly as possible to the specified test speed and conduct the second recovery performance stop.

S7.16.4. *Performance requirements.*

The stopping distance, S, for at least one of the two stops must be within the following limits:

$$\frac{0.0386V^2}{1.50d_c} \leq S - 0.10V \leq \frac{0.0386V^2}{0.70d_c}$$

where d_c and V are defined in S7.14.4(a).

S7.17. *Final Inspection.* Inspect:

(a) The service brake system for detachment or fracture of any components, such as brake springs and brake shoes or disc pad facings.

(b) The friction surface of the brake, the master cylinder or brake power unit reservoir cover, and seal and filler openings, for leakage of brake fluid or lubricant.

(c) The master cylinder or brake power unit reservoir for compliance with the volume and labeling requirements of S5.4.2 and S5.4.3. In determining the fully applied worn condition, assume that the lining is worn to (1) rivet or bolt heads on riveted or bolted linings or (2) within 0.8 mm (1/32 inch) of shoe or pad mounting surface on bonded linings or (3) the limit recommended by the manufacturer, whichever is larger relative to the total possible shoe or pad movement. Drums or rotors are assumed to be at nominal design drum diameter or rotor thickness. Linings are assumed adjusted for normal operating clearance in the released position.

(d) The brake system indicators, for compliance with operation in various key positions, lens color, labeling, and location, in accordance with S5.5.

Issued: January 23, 1995.

Ricardo Martinez,

Administrator.

[FR Doc. 95–2324 Filed 2–1–95; 8:45 am]

BILLING CODE 4910–59–P

DEPARTMENT OF COMMERCE

National Oceanic and Atmospheric Administration

50 CFR Part 651

[Docket No. 950124025–5025–01; I.D. 122094A]

RIN 0648–AD33

Northeast Multispecies Fishery

AGENCY: National Marine Fisheries Service (NMFS), National Oceanic and Atmospheric Administration (NOAA), Commerce.

ACTION: Final rule; technical amendment.

SUMMARY: NMFS issues this final rule to make corrections and clarifications to the regulations implementing Amendment 5 to the Northeast Multispecies Fishery Management Plan (FMP) and subsequent framework actions.

EFFECTIVE DATE: February 1, 1995, except for § 651.9(e)(36), amendments to § 651.20(b)(2)(ii), and § 651.20(c)(2)(ii), and § 651.20(c)(4) introductory text, which will be effective on June 11, 1995.

FOR FURTHER INFORMATION CONTACT: Bridgette S. Davidson, NMFS, Fishery Management Specialist, 508–281–9347.

SUPPLEMENTARY INFORMATION: The New England Fishery Management Council (Council) submitted Amendment 5 to the FMP to NMFS on September 27, 1993. Amendment 5, with some exceptions, was approved on January 3, 1994. The final rule for Amendment 5 was published on March 1, 1994 (59 FR 9872). This final rule makes several corrections and clarifications to the regulations and to subsequent amendments to the regulations—59 FR 9872, March 1, 1994; 59 FR 26972, May 25, 1994; 59 FR 36725, July 19, 1994; 59 FR 42176, August 17, 1994.

The definition of ''sink gillnet'' (§ 651.2) was modified in Framework Adjustment 4 to the FMP and is further clarified here. The definition is revised to clarify that a sink gillnet is a bottom-tending gillnet.

Section 651.4(f)(2)(iv) is modified to reflect the Council's intent. Although the preamble to the final regulations for Amendment 5 stated that vessel owners would be allowed to change their 1994 permit category within 30 days of receiving their permit, there was no specific language in the regulations prohibiting a change in category after that time during the initial fishing year. The Council did not intend for vessels to switch between days-at-sea (DAS) programs, except during the renewal process to receive a 1995 limited access multispecies permit. The regulations are modified accordingly.

Section 651.5 requires any operator of a vessel in possession of multispecies harvested from the exclusive economic zone to have an operator's permit. Recreational vessels that are exempt from a multispecies permit are also exempt from the operator's permit requirements. This exemption was inadvertently omitted from the final rule implementing Amendment 5. This final rule clarifies that only vessels that are required to have a multispecies permit are required to have an operator with an operator's permit.

The regulations implementing mesh obstruction and tie-up inadvertently had no correlated prohibitions. Section 651.9(b)(11) and (e)(36) are added by this final rule to address this omission; however, the prohibition at § 651.9(e)(36) will be effective beginning June 11, 1995, due to the emergency action published in the **Federal Register** on (59 FR 63926, December 12, 1994), which temporarily added prohibitions to that section. The emergency action is effective through March 12, but the Council is expected to vote to extend the emergency for an additional 90 days, i.e., through June 11, 1995. If the emergency action is not extended, NMFS will publish a notice to modify the effective date of this rule.

In order to reflect more accurately the prohibition at § 651.9(b)(1), the word ''accruing'' is replaced with ''using'' when discussing a vessel using all of its annual DAS allocation.

Section 651.20(b)(2)(ii) and (c)(2)(ii) both make reference to paragraphs (f) and (g). These references are corrected to read paragraphs (e) and (f), respectively, which are the midwater trawl gear and the purse seine gear exceptions.

The net stowage requirements at § 651.20(c)(4) are directed at fishing in southern New England or the mid-Atlantic, but the stowage requirements also apply to sink gillnet vessels transitting areas closed to sink gillnets and to vessels participating in the Cultivator Shoals Whiting Fishery when transitting the Gulf of Maine/Georges Bank regulated mesh area. References to specific geographic areas are removed from net stowage requirements. Corrections to § 651.20 will be effective beginning June 11, 1995, because the emergency action published on December 12, 1994, has temporarily suspended portions of this section.

Section 651.22(c)(1)(i)(B) is corrected by removing the reference to the 500–lb (226.8–kg) possession limit, which was changed with Framework Adjustment 3 to the FMP (59 FR 36725, July 19, 1994).

A technical amendment to § 651.22(d)(1)(i)(C) clarifies that in order to be eligible for the small-boat exemption (for vessels 45 ft (13.7 m) or less), a vessel owner must provide documentation that accurately states the vessel's length overall. This is intended to remove the confusion as to when U.S. Coast Guard documentation will be accepted as verification of a vessel's length.

In § 651.23(c), the reference to paragraph (c) is corrected to read paragraph (d).

Classification

Because this rule only corrects omissions and other errors or makes clarifications of intent to an existing set of regulations for which full prior notice and opportunity for comment have been given, under 5 U.S.C. 553(b)(B), it is unnecessary to provide prior notice and opportunity for comment.

This rule imposes no new requirements on anyone subject to these regulations, and many provisions remove or relieve restrictions. Accordingly, under 5 U.S.C. 553(d), the rule is effective immediately except for sections 651.9(e)(36), 651.20(b)(2)(ii), 651.20(c)(2)(ii), and 651.20(c)(4) introductory text, which will be effective beginning June 11, 1995.

This rule is exempt from review under E.O. 12866.

List of Subjects in 50 CFR Part 651

Fisheries, Fishing, Reporting and recordkeeping requirements.

Dated: January 26, 1995.

Gary Matlock,

Program Management Officer, National Marine Fisheries Service.

For the reasons set out in the preamble, 50 CFR part 651 is amended as follows:

PART 651—NORTHEAST MULTISPECIES FISHERY

1. The authority citation for part 651 continues to read as follows:

Authority: 16 U.S.C. 1801 *et seq.*

2. Section 651.2, the definition for ''sink gillnet'' is revised to read as follows:

§ 651.2 Definitions.

* * * * *

Sink gillnet means a bottom-tending gillnet, which is any gillnet, anchored or otherwise, that is designed to be, is capable of being, or is fished on or near the bottom in the lower third of the water column.

* * * * *

3. Section 651.4(f)(2)(iv), is revised to read as follows:

§ 651.4 Vessel permits.

* * * * *

(f) * * *

(2) * * *

(iv) In 1994, vessel owners may change their vessel's DAS category within 30 days of receipt of their 1994 multispecies permit. After 30 days, the vessel must fish only in the DAS program assigned for the remainder of the fishing year. In 1995, if the vessel owner is applying to fish under a different DAS program than was assigned for 1994, the application must include such election and the vessel must fish only in that category for the entire fishing year.

* * * * *

4. Section 651.5(a) is revised to read as follows:

§ 651.5 Operator permits.

(a) *General.* Any operator of a vessel that has been issued a valid Federal multispecies permit under this part, or any operator of a vessel fishing for multispecies finfish in the EEZ or in possession of multispecies finfish in or harvested from the EEZ, must carry on board a valid operator's permit issued under this part. This requirement does not apply to recreational vessels and vessels that fish exclusively in state waters for multispecies.

* * * * *

5. In § 651.9, paragraph (b)(1) is revised, and paragraph (b)(11) is added to read as follows:

§ 651.9 Prohibitions.

* * * * *

(b) * * *

(1) Possess at any time during a trip, or land per trip, more than the possession limit of regulated species as specified in § 651.27(a), after using the vessel's annual DAS allocation or when not participating under the DAS program pursuant to § 651.22.

* * * * *

(11) Fail to comply with the layover day requirement as described in § 651.22(c)(1)(ii)(A).

* * * * *

6. Effective June 11, 1995, in § 651.9, paragraph (e)(36) is added to read as follows:

§ 651.9 Prohibitions.

* * * * *

(e) * * *

(36) Obstruct or constrict a net as described in § 651.20(h)(1) and (2).

* * * * *

7. Effective June 11, 1995, § 651.20 is amended by removing the words ''paragraphs (f) and (g)'' from the first sentences of paragraphs (b)(2)(ii) and (c)(2)(ii) and adding in their places the words ''paragraphs (e) and (f)'', and by revising paragraph (c)(4) introductory text to read as follows:

§ 651.20 Regulated mesh areas and restrictions on gear and methods of fishing.

* * * * *

(c) * * *

(4) *Net stowage requirements.* A net that is stowed and is not available for immediate use conforms to one of the following specifications:

* * * * *

8. In § 651.22, paragraphs (c)(1)(i)(B) and (d)(1)(i)(C) are revised to read as follows:

§ 651.22 Effort-control program for limited access vessels.

* * * * *

(c) * * *

(1) * * *

(i) * * *

(B) During each period of time declared, the applicable vessel may not possess more than the possession limit of regulated species as specified in § 651.27(a).

* * * * *

(d) * * *

(1) * * *

(i) * * *

(C) The measurement of length overall must be verified using documentation that accurately states length overall as described in paragraph (c)(1)(i)(A) of this section. Acceptable documentation includes U.S. Coast Guard

documentation on vessels built after 1984, written verification from a qualified marine surveyor or the builder, or the vessel's construction plans. A copy of the length overall verification must accompany an application for a Federal multispecies permit issued under § 651.4.

* * * * *

9. Section 651.23(c) is revised to read as follows:

§ 651.23 Minimum fish size.

* * * * *

(c) The minimum size applies to whole fish or to any part of a fish while possessed on board a vessel, except as provided in paragraph (d) of this section, and to whole fish only, after landing. Fish or parts of fish must have skin on while possessed on board a vessel and at the time of landing in order to meet minimum size requirements. ''Skin on'' means the entire portion of the skin normally attached to the portion of the fish or fish parts possessed.

* * * * *

[FR Doc. 95–2536 Filed 2–01–95; 8:45 am]

BILLING CODE 3510–22–F

---

50 CFR Part 676

[Docket No. 950123023–5023–01; I.D. 010995E]

RIN 0648–AH38

Limited Access Management of Federal Fisheries In and Off of Alaska; Determinations and Appeals

AGENCY: National Marine Fisheries Service (NMFS), National Oceanic and Atmospheric Administration (NOAA), Commerce.

ACTION: Interim final rule; request for comments.

SUMMARY: This interim final rule amends the regulations implementing the determinations and appeals procedures for limited access management of Federal fisheries in and off of Alaska and amends regulations implementing the individual fishing quota (IFQ) limited access program with respect to establishment of quota share (QS) pools for each IFQ regulatory area. The changes made to the determinations and appeals procedures reduce the current two-stage appeals procedure to a single-step process, and reduce the length of time periods for certain appeals-related actions. The changes made to the establishment of QS pools allow for the addition of catch history that is in dispute and being appealed. These changes are necessary to avoid excessive delays in deciding appeals and to allow the timely issuance of IFQ resulting from disputed catch history that was successfully appealed. The intended effect of this action is to shorten the appeals process while providing reasonable time for applicants to file, and to provide IFQ resulting from disputed catch history to persons who may have an appeal successfully resolved after the IFQ calculation date.

DATES: Interim rule effective January 30, 1995. Comments must be received at the following address no later than March 6, 1995.

ADDRESSES: Comments on the interim final rule may be sent to Ronald J. Berg, Chief, Fisheries Management Division, Alaska Region, NMFS, 709 West 9th Street, Juneau, AK 99801, or P.O. Box 21668, Juneau, AK 99802–1668, Attn: Lori J. Gravel. Copies of the regulatory impact review prepared for this action may be obtained also from this address.

FOR FURTHER INFORMATION CONTACT: John Lepore, 907–586–7228.

SUPPLEMENTARY INFORMATION:

Background

The IFQ program is a regulatory regime developed by the North Pacific Fishery Management Council to promote the conservation and management of Pacific halibut (*Hippoglossus stenolepis*) and sablefish (*Anoplopoma fimbria*) fixed gear fisheries in the Gulf of Alaska and the Bering Sea and Aleutian Islands Area under Federal jurisdiction. Further information about the IFQ program is contained in the preamble to the final implementing regulations published November 9, 1993 (58 FR 59375). The commercial harvesting of halibut and sablefish under the IFQ program is scheduled to begin in the spring of 1995. The IFQ program is implemented by regulations at 50 CFR part 676.

The IFQ implementing regulations provide for the assignment of QS to qualified persons. The amount of QS assigned directly reflects a qualified person's verified catch history during specified years. The allocation of IFQ represents a privilege to harvest a specified amount of halibut or sablefish during one fishing year. The amount of IFQ allocated to any person by area is calculated annually on January 31 generally as the product of the total allowable catch available for harvest by fixed gear and the persons's QS divided by the QS pool for the area (50 CFR 676.20(f)). The QS pool for an area is the sum of all QS in that area for a species (50 CFR 676.20(b)).

Changes to the Determinations and Appeals Procedures

Final rules implementing the appeals procedure for limited access fisheries management of Federal fisheries in and off of Alaska became effective July 1, 1994 (59 FR 28281, June 1, 1994). A detailed explanation of the procedure for appealing initial administrative determinations appears in the preamble of the notice of proposed rulemaking published February 9, 1994 (59 FR 5979). Three changes to the final rules have been identified by NMFS as necessary to improve the efficiency of the appeals process. These changes:

1. Eliminate applicants' right to appeal an appellate officer's decision to the NMFS Director, Alaska Region (Regional Director), but retain the Regional Director's discretionary authority to renew, modify, reverse or remand any such decision;

2. Reduce the time period for filing an appeal of an initial administrative determination from 90 Federal business days to 60 calendar days after the date the determination was made; and

3. Reduce the time period before an appellate officer's decision becomes effective from 45 Federal business days to 30 calendar days after the date the decision is issued, unless, prior to that time, the Regional Director alters or modifies the decision, issues an order staying the effectiveness of the decision pending review, or accelerates the effectiveness date.

Subject to later revision based on public comments received, these actions are necessary to avoid excessively delayed appeals decisions. It is now apparent that the timely resolution of appeals to the Regional Director will not be possible. The changes discussed above will facilitate a more timely appeals process. The original time periods were excessively long in view of the number of appeals that are now expected, and resolving these appeals more expeditiously will benefit the fishermen involved. The majority of the initial administrative decisions to deny QS are due to be issued before January 31, 1995, the date of the required calculation of IFQ for the 1995 fishing season.

The first change is the elimination of the right to appeal an appellate officer's decision to the Regional Director. The Regional Director's discretionary authority to review and modify, reverse, or remand any appellate officer's decision is retained. This effectively changes the original two-stage appeals procedure into a single-step process. The original procedure provided an applicant a first-stage opportunity to

appeal an initial administrative determination to an appellate officer, and a second-stage opportunity to appeal the appellate officer's decision to the Regional Director. This regulatory amendment eliminates the second stage appeal; however, the Regional Director will routinely review appellate officers' decisions, and may reverse, modify, or remand these decisions for further consideration. If the appellate officer's decision is modified or reversed, the Regional Director will issue a written decision explaining the reasons for this action. The appellate officer's decision, unless acted on by the Regional Director, will be the final agency action for purposes of judicial review 30 days after issuance.

The second change is a substantial reduction of the time period within which an appellant may file an appeal. The purpose of this change is to expedite the appeals process, as explained above. The time period within which an appellant may file a written appeal of an initial administrative determination is changed from 90 Federal business days to 60 calendar days after the date the determination is made. This change effectively reduces the appeal filing opportunity from about 4 months to about 2 months. Saturdays, Sundays, and Federal holidays would be counted as part of the 60-day time period unless the last day of the 60-day period falls on a Saturday, Sunday, or Federal holiday. In this event, the period is extended to the close of business on the next business day.

The original appeals filing period of 90 days, not including weekends and holidays, was intended to provide an appellant with a liberal period within which to prepare an appeal. NOAA has determined that this period is unnecessarily long and would exacerbate expected delay in the resolution of appeals. Resolution of disputes involving more than one applicant but possibly the same vessel or catch data could be facilitated by resolving related appeals at the same time. Without this change, one person could file a prompt appeal while another could delay filing for up to 4 months, thereby preventing the prompt issuance of disputed IFQ. A 60-day period, including weekends and holidays except on the last day of the period, would provide appellants with adequate time to prepare and file appeals, and would benefit all affected parties by accelerating the appeals process.

The third change is a shortening of the period of delayed effectiveness of an appellate officer's decision from 45 Federal business days to 30 calendar days. The purpose of this change also is to speed achievement of final agency action on appeals. A 30–calendar-day period is adequate for the Regional Director to review an appellate officer's decision and take any action deemed necessary, such as a stay. Unless acted on by the Regional Director, an appellate officer's decision will be the final agency action subject to judicial review at the end of the 30–calendar-day delayed effectiveness period.

Changes to the Establishment of Quota Share Pools

Regulations pertaining to the calculation of QS and the QS pool for an area and regulations for appealing initial administrative determinations made regarding those calculations are found at 50 CFR 676.20 and 676.25, respectively. This action changes § 676.20(d)(3) to establish a reserve within the QS pool of each IFQ regulatory area; otherwise, contested catch history would not have been included in the QS pool. Any person who does not have QS included in the QS pool on January 31 of any year will not be allocated IFQ for that year and will not be able to participate in the IFQ fisheries in that year.

A problem of particular concern in the initial year of the IFQ program is that numerous appeals involve multiple parties. There may be disputes, for example, over who owned or leased a vessel that made qualified landings but not over the amount of those landings. Resolution of such appeals during the 1995 IFQ fishing season for halibut and sablefish would not allow the prevailing party to receive IFQ and use it during the season.

To correct this problem a QS pool reserve is established for catch history that would otherwise be withheld from the QS pool due to the pendency, at the time IFQ is determined, of an appeal involving contested catch history, vessel ownership or vessel lease data by two or more QS applicants. NMFS will set aside QS in the reserve pool for eventual award to specific appellants, and will include this QS in the total QS pool for purposes of determining the amount of IFQ to be assigned to each holder of QS.

This action addresses the problem that appeals, which involve multi-party contests over verified fish landings during the base period, could unjustly result in failure to allocate IFQ for the 1995 fishing season to applicants having made timely and sufficient application for participation in the IFQ Program. This procedure (i.e., placing contested QS in a reserve) is for use only in situations in which the eligibility for qualifying pounds has been established but the appropriate party to be issued the QS, and the resulting IFQ, is pending decision.

Appeals may involve disputes between the appellant and NMFS over the amount of catch history that should be counted for purposes of calculating QS or may involve disputes between two or more persons over who should be assigned QS that results from catch history, vessel ownership, or lease history. Although any appeal would prevent NMFS from issuing contested QS, the agency could calculate the approximate amount of QS that would be added to the QS pool before an appeal involving two or more persons is resolved if the amount of catch history is not the issue being appealed but rather the issue is who should receive the QS that results from the catch history. In such cases, the undisputed catch history could be placed in a reserve as part of the QS pool for IFQ calculation purposes but no QS or IFQ would be assigned until after the agency determines the appropriate person or entity to receive the QS. The purpose of such a reserve is to provide for an immediate assignment of QS and IFQ upon final agency action on such multi-party appeals. This would allow the person receiving such IFQ to begin using it to harvest halibut or sablefish during the remainder of the IFQ fishing season following the decision. Alternatively, IFQ stemming from such disputed QS would not be issued until the year following final agency action.

Waiver of Notice and Comment and Delayed Effectiveness Period

This action must be made effective immediately for its benefits to be realized by the public. Pursuant to 5 U.S.C. 553(b)(B), a rule may be issued without prior notice and opportunity for public comment if providing such would be impracticable, unnecessary, or contrary to the public interest. Pursuant to 5 U.S.C. 553(d)(3), a rule may be made effective prior to 30 days after its issuance for good cause found and published with the rule.

As explained earlier, both the two-tiered appeals process and the excessively long period in which an appeal may be filed under the current system cause unnecessary delays. These delays are harmful to the public, because they delay the opportunity for a successful appellant to use any fishing privileges resulting from an appeal. Delaying promulgation of this rule to allow for prior notice and opportunity for public comment and delaying its effective date for 30 days would be contrary to the public interest in that the

delays sought to be reduced or eliminated by this action would continue to occur for initial administrative determinations of QS and initial determinations by appellant officers issued during notice-and-comment rulemaking, including any period of delayed effective date.

If this rule is immediately issued and made effective upon filing with the Office of the Federal Register, only those relatively few applicants for whom an initial administrative determination of QS has been made would be entitled to the previous 4-month time frame in which to file an appeal and only those very few appellants for whom an appellate officer has already issued a decision would be entitled to an appeal to the Regional Director. For all others the harmful delay to the public which this rule seeks to eliminate would be eliminated. Accordingly, for the reason set forth above, the Assistant Administrator finds good cause to dispense with prior notice and opportunity for public comment and to make the rule immediately effective upon filing with the Office of Federal Register.

Similarly, the establishment of QS pool reserves must be effective immediately. By regulation, the calculation to determine how much IFQ will be issued for the 1995 fishing season occurs on January 31, 1995. If QS is not in the pool as of this determination date, the resulting IFQ will not be issued. Providing QS pool reserves for contested QS will benefit successful appellants by allowing them to obtain IFQ that is calculated but not issued pending resolution of an appeal. Without this action, a successful appellant will have to wait until the following season to receive IFQ if the QS involved in the appeal is added to the QS pool after the determination date. As such, this rule must be effective on or before January 31, 1995, for successful appellants to fish during the 1995 season. Given the current time-frame, any delay in the effectiveness of this rule will nullify the benefit. Nullifying this benefit will be contrary to the public interest and thereby constitutes good cause for dispensing with prior notice and opportunity for public comment and for making the rule immediately effective.

Classification

A regulatory impact review/final regulatory flexibility analysis (RIR/FRFA) was prepared for the IFQ limited access program of which the original appeals and determinations are a part. The RIR/FRFA is contained in the Final Environmental Impact Statement for Amendment 15 to the Fishery Management Plan (FMP) for the Groundfish Fisheries of the Bering Sea and Aleutian Islands Area, and for Amendment 20 to the FMP for Groundfish of the Gulf of Alaska. This document is available (see **ADDRESSES**).

This final rule makes minor revisions to the regulations affecting the filing of an appeal of an initial administrative determination. No new information is collected, but the period of time within which affected persons would have to submit information is decreased. The estimated response time for filing a written appeal under the IFQ program is 4 hours. This collection of information has been approved by the Office of Management and Budget, OMB control number 0648–0272 (regarding IFQs for Pacific halibut and sablefish).

This rule has been determined to be not significant for purposes of Executive Order 12866.

List of Subjects in 50 CFR Part 676

Fisheries, Reporting and recordkeeping requirements.

Dated: January 30, 1995.

Nancy Foster,

Deputy Assistant Administrator for Fisheries, National Marine Fisheries Service.

For the reasons set out in the preamble, 50 CFR part 676 is amended to read as follows:

PART 676—LIMITED ACCESS MANAGEMENT OF FEDERAL FISHERIES IN AND OFF OF ALASKA

1. The authority citation for part 676 continues to read as follows:

Authority: 16 U.S.C. 773 *et seq.* and 1801 *et seq.*

2. In § 676.20, paragraph (d)(3) is revised and paragraph (e) is removed and reserved as follows:

§ 676.20 Individual allocations.

* * * * *

(d) * * *

(3) Catch history, vessel ownership, or lease data that cannot be verified by the Regional Director, following the procedure described in paragraph (d)(1) of this section, will not qualify for QS. An initial determination denying QS on the grounds that claimed catch history, vessel ownership or lease data were not verified may be appealed following the procedure described in § 676.25 of this part. Quota share reflecting catch history, vessel ownership, or lease data that are contested between two or more applicants, at least one of which is likely to qualify for QS when the dispute is resolved, will be assigned to a reserve that will be considered part of the QS pool for the appropriate IFQ regulatory area. Any QS and IFQ that results from agency action resolving the dispute will be assigned to the prevailing applicant(s) pursuant to paragraphs (b), (c) and (f) of this section. If the assigned IFQ for the 1995 fishing season becomes moot by the passage of time needed to resolve the dispute, the assignment of QS and IFQ for subsequent fishing seasons will be unaffected.

(e) [Reserved]

* * * * *

3. In § 676.25, paragraphs (a), (b), (d)(1), (d)(2), (g) introductory text, (g)(1), (g)(2), (k), (m)(4), (n)(8), and (o) are revised to read as follows:

§ 676.25 Determinations and appeals.

(a) *General.* This section describes the procedure for appealing initial administrative determinations made under this part.

(b) *Who may appeal.* Any person whose interest is directly and adversely affected by an initial administrative determination may file a written appeal. For purposes of this section, such persons will be referred to as ''applicant'' or ''appellant''.

* * * * *

(d) *Time periods for appeals and date of filing.* (1) If an applicant appeals an initial administrative determination, the appeal must be filed not later than 60 days after the date the determination is issued.

(2) The time period within which an appeal may be filed begins to run on the date the initial administrative determination is issued. If the last day of the time period is a Saturday, Sunday, or Federal holiday, the time period will be extended to the close of business on the next business day.

* * * * *

(g) *Decision Whether to Order a Hearing.* The appellate officer will review the applicant's appeal and request for hearing, and has discretion to proceed as follows:

(1) Deny the appeal;

(2) Issue a decision on the merits of the appeal if the record contains sufficient information on which to reach final judgment; or

* * * * *

(k) *Appellate Officers' Decisions.* The appellate officer will close the record and issue a decision after determining that there is sufficient information to render a decision on the record of the proceedings and that all procedural requirements have been met. The decision must be based solely on the record of the proceedings. Except as provided in paragraph (o) of this

section, an appellate officer's decision takes effect 30 days after it is issued and upon taking effect is the final agency action for purposes of judicial review.

* * * * *

(m) * * *

(4) The appellate officer will close the record and issue a decision after determining that the information on the record is sufficient to render a decision.

(n) * * *

(8) The appellate officer will close the record and issue a decision after determining that the information on the record is sufficient to render a decision.

(o) *Review by the Regional Director.* An appellate officer's decision is subject to review by the Regional Director, as provided in this paragraph.

(1) The Regional Director may affirm, reverse, modify, or remand the appellate officer's decision before the 30-day effective date of the decision provided in paragraph (k) of this section. The Regional Director may take any of these actions on or after the 30-day effective date by issuing a stay of the decision before the 30-day effective date. An action taken under paragraph (o)(1) of this section takes effect immediately.

(2) The Regional Director must provide a written explanation why an appellate officer's decision has been reversed, modified, or remanded.

(3) The Regional Director must promptly notify the appellant(s) of any action taken under paragraph (o) of this section.

(4) The Regional Director's decision to affirm, reverse, or modify an appellate officer's decision is a final agency action for purposes of judicial review.

[FR Doc. 95–2606 Filed 1–30–95; 2:47 pm]

BILLING CODE 3510–22–F

Proposed Rules

Federal Register
Vol. 60, No. 22
Thursday, February 2, 1995

This section of the FEDERAL REGISTER contains notices to the public of the proposed issuance of rules and regulations. The purpose of these notices is to give interested persons an opportunity to participate in the rule making prior to the adoption of the final rules.

DEPARTMENT OF AGRICULTURE

Agricultural Marketing Service

7 CFR Part 29

[TB–94–36]

Tobacco Inspection—Growers Referendum

AGENCY: Agricultural Marketing Service, USDA.

ACTION: Notice of referendum.

SUMMARY: This notice announces that a referendum will be conducted by mail during the period of February 6–10, 1995, for producers of flue-cured tobacco who sell their tobacco at auction in Clarkton and Chadbourn, North Carolina, to determine producer approval of the designation of the Clarkton and Chadbourn tobacco markets as one consolidated auction market.

DATES: The referendum will be held February 6–10, 1995.

FOR FURTHER INFORMATION CONTACT: Larry L. Crabtree, Deputy Director, Tobacco Division, Agricultural Marketing Service, United States Department of Agriculture, P.O. Box 96456, Washington, DC 20090–6456; telephone number (202) 205–0235.

SUPPLEMENTARY INFORMATION: Notice is hereby given of a mail referendum on the designation of a consolidated auction market at Clarkton and Chadbourn, North Carolina. Clarkton and Chadbourn, North Carolina, were designated on June 26, 1942, (7 CFR 29.8001) as flue-cured tobacco auction markets under the Tobacco Inspection Act (7 U.S.C. 511 *et seq.*). Under this Act both have been receiving mandatory grading services from USDA.

On September 2, 1994, an application was made to the Secretary of Agriculture to consolidate the designated markets of Clarkton and Chadbourn, North Carolina. The application, filed by warehouse operators in those markets, was made pursuant to the regulations promulgated under the Tobacco Inspection Act (7 CFR part 29.1–29.3). On November 10, 1994, a public hearing was held in Fair Bluff, North Carolina, pursuant to the regulations. A Review Committee, established pursuant to § 29.3(h) of the regulations (7 CFR 29.3 (h)), has reviewed and considered the application, the testimony presented at the hearing, the exhibits received in evidence, and other available information. The Committee recommended to the Secretary that the application be granted and the Secretary approved the application on January 20, 1995.

Before a new market can be officially designated, a referendum must be held to determine that a two-thirds majority of producers favor the designation. It is hereby determined that the referendum will be held by mail during the period of February 6–10, 1995. The purpose of the referendum is to determine whether farmers who sold their tobacco on the designated markets at Clarkton and Chadbourn are in favor of, or opposed to, the designation of the consolidated market for the 1995 and succeeding crop years. Accordingly, if a two-thirds majority of those tobacco producers voting in the referendum favor this consolidation, a new market will be designated as and will be called Clarkton-Chadbourn.

To be eligible to vote in the referendum a tobacco producer must have sold flue-cured tobacco on either the Clarkton and Chadbourn, North Carolina, auction markets during the 1994 marketing season. Any farmer who believes he or she is eligible to vote in the referendum but has not received a mail ballot by February 6, 1995, should immediately contact Larry L. Crabtree at (202) 205–0235.

The referendum will be held in accordance with the provisions for referenda of the Tobacco Inspection Act, as amended (7 U.S.C. 511d) and the regulations for such referendum set forth in 7 CFR 29.74.

Dated: January 27, 1995.

Lon Hatamiya,

Administrator.

[FR Doc. 95–2585 Filed 2–1–95; 8:45 am]

BILLING CODE 3410–02–P

7 CFR Part 29

[TB–94–35]

Tobacco Inspection—Growers Referendum

AGENCY: Agricultural Marketing Service, USDA.

ACTION: Notice of referendum.

SUMMARY: This notice announces that a referendum will be conducted by mail during the period of February 6–10, 1995, for producers of flue-cured tobacco who sell their tobacco at auction in Tifton and Fitzgerald-Ocilla, Georgia, to determine producer approval of the designation of the Tifton and Fitzgerald-Ocilla tobacco markets as one consolidated auction market.

DATES: The referendum will be held February 6–10, 1995.

FOR FURTHER INFORMATION CONTACT: Larry L. Crabtree, Deputy Director, Tobacco Division, Agricultural Marketing Service, United States Department of Agriculture, P.O. Box 96456, Washington, DC 20090–6456; telephone number (202) 205–0235.

SUPPLEMENTARY INFORMATION: Notice is hereby given of a mail referendum on the designation of a consolidated auction market at Tifton and Fitzgerald-Ocilla, Georgia. Tifton and Fitzgerald-Ocilla, Georgia, were designated on June 26, 1942, and May 29, 1991, respectively, (7 CFR 29.8001) as flue-cured tobacco auction markets under the Tobacco Inspection Act (7 U.S.C. 511 *et seq.*). Under this Act both have been receiving mandatory grading services from USDA.

On August 30, 1994, an application was made to the Secretary of Agriculture to consolidate the designated markets of Tifton and Fitzgerald-Ocilla, Georgia. The application, filed by warehouse operators in those markets, was made pursuant to the regulations promulgated under the Tobacco Inspection Act (7 CFR part 29.1–29.3). On November 7, 1994, a public hearing was held in Ocilla, Georgia, pursuant to the regulations. A Review Committee, established pursuant to § 29.3(h) of the regulations (7 CFR 29.3 (h)), has reviewed and considered the application, the testimony presented at the hearing, the exhibits received in evidence, and other available information. The Committee

recommended to the Secretary that the application be granted and the Secretary approved the application on January 20, 1995.

Before a new market can be officially designated, a referendum must be held to determine that a two-thirds majority of producers favor the designation. It is hereby determined that the referendum will be held by mail during the period of February 6–10, 1995. The purpose of the referendum is to determine whether farmers who sold their tobacco on the designated markets at Tifton and Fitzgerald-Ocilla are in favor of, or opposed to, the designation of the consolidated market for the 1995 and succeeding crop years. Accordingly, if a two-thirds majority of those tobacco producers voting in the referendum favor this consolidation, a new market will be designated as and will be called Tifton-Fitzgerald-Ocilla.

To be eligible to vote in the referendum a tobacco producer must have sold flue-cured tobacco on either the Tifton or Fitzgerald-Ocilla, Georgia, auction markets during the 1994 marketing season. Any farmer who believes he or she is eligible to vote in the referendum but has not received a mail ballot by February 6, 1995, should immediately contact Larry L. Crabtree at (202) 205–0235.

The referendum will be held in accordance with the provisions for referenda of the Tobacco Inspection Act, as amended (7 U.S.C. 511d) and the regulations for such referendum set forth in 7 CFR 29.74.

Dated: January 27, 1995.

Lon Hatamiya,

Administrator.

[FR Doc. 95–2584 Filed 2–1–95; 8:45 am]

BILLING CODE 3410–02–P

---

7 CFR Part 29

[TB–94–32]

Tobacco Inspection—Growers Referendum

AGENCY: Agricultural Marketing Service, USDA.

ACTION: Notice of referendum.

SUMMARY: This notice announces that a referendum will be conducted by mail during the period of February 6–10, 1995, for producers of flue-cured tobacco who sell their tobacco at auction in Fairmont and Fair Bluff, North Carolina, to determine producer approval of the designation of the Fairmont and Fair Bluff tobacco markets as one consolidated auction market.

DATES: The referendum will be held February 6–10, 1995.

FOR FURTHER INFORMATION CONTACT: Larry L. Crabtree, Deputy Director, Tobacco Division, Agricultural Marketing Service, United States Department of Agriculture, P.O. Box 96456, Washington, DC 20090–6456; telephone number (202) 205–0235.

SUPPLEMENTARY INFORMATION: Notice is hereby given of a mail referendum on the designation of a consolidated auction market at Fairmont and Fair Bluff, North Carolina. Fairmont and Fair Bluff, North Carolina, were designated on June 26, 1942, (7 CFR 29.8001) as flue-cured tobacco auction markets under the Tobacco Inspection Act (7 U.S.C. 511 *et seq.*). Under this Act both have been receiving mandatory grading services from USDA.

On July 14, 1994, an application was made to the Secretary of Agriculture to consolidate the designated markets of Fairmont and Fair Bluff, North Carolina. The application, filed by warehouse operators in those markets, was made pursuant to the regulations promulgated under the Tobacco Inspection Act (7 CFR part 29.1–29.3). On November 10, 1994, a public hearing was held in Fair Bluff, North Carolina, pursuant to the regulations. A Review Committee, established pursuant to § 29.3(h) of the regulations (7 CFR 29.3 (h)), has reviewed and considered the application, the testimony presented at the hearing, the exhibits received in evidence, and other available information. The Committee recommended to the Secretary that the application be granted and the Secretary approved the application on January 20, 1995.

Before a new market can be officially designated, a referendum must be held to determine that a two-thirds majority of producers favor the designation. It is hereby determined that the referendum will be held by mail during the period of February 6–10, 1995. The purpose of the referendum is to determine whether farmers who sold their tobacco on the designated markets at Fairmont and Fair Bluff are in favor of, or opposed to, the designation of the consolidated market for the 1995 and succeeding crop years. Accordingly, if a two-thirds majority of those tobacco producers voting in the referendum favor this consolidation, a new market will be designated as and will be called Fairmont-Fair Bluff.

To be eligible to vote in the referendum a tobacco producer must have sold flue-cured tobacco on either the Fairmont or Fair Bluff, North Carolina, auction markets during the 1994 marketing season. Any farmer who believes he or she is eligible to vote in the referendum but has not received a mail ballot by February 6, 1995, should immediately contact Larry L. Crabtree at (202) 205–0235.

The referendum will be held in accordance with the provisions for referenda of the Tobacco Inspection Act, as amended (7 U.S.C. 511d) and the regulations for such referendum set forth in 7 CFR 29.74.

Dated: January 27, 1995.

Lon Hatamiya,

Administrator.

[FR Doc. 95–2586 Filed 2–1–95; 8:45 am]

BILLING CODE 3410–02–P

---

7 CFR Part 29

[TB–94–37]

Tobacco Inspection—Growers Referendum

AGENCY: Agricultural Marketing Service, USDA.

ACTION: Notice of referendum.

SUMMARY: This notice announces that a referendum will be conducted by mail during the period of February 6–10, 1995, for producers of flue-cured tobacco who sell their tobacco at auction in Kingstree and Hemingway, South Carolina, to determine producer approval of the designation of the Kingstree and Hemingway tobacco markets as one consolidated auction market.

DATES: The referendum will be held February 6–10, 1995.

FOR FURTHER INFORMATION CONTACT: Larry L. Crabtree, Deputy Director, Tobacco Division, Agricultural Marketing Service, United States Department of Agriculture, P.O. Box 96456, Washington, DC 20090–6456; telephone number (202) 205–0235.

SUPPLEMENTARY INFORMATION: Notice is hereby given of a mail referendum on the designation of a consolidated auction market at Kingstree and Hemingway, South Carolina. Kingstree and Hemingway, South Carolina, were designated on June 26, 1942, and June 16, 1950, respectively, (7 CFR 29.8001) as flue-cured tobacco auction markets under the Tobacco Inspection Act (7 U.S.C. 511 et seq.). Under this Act both have been receiving mandatory grading services from USDA.

On September 6, 1994, an application was made to the Secretary of Agriculture to consolidate the designated markets of Kingstree and Hemingway, South Carolina. The application, filed by warehouse operators in those markets, was made

pursuant to the regulations promulgated under the Tobacco Inspection Act (7 CFR part 29.1–29.3). On November 9, 1994, a public hearing was held in Kingstree, South Carolina, pursuant to the regulations. A Review Committee, established pursuant to § 29.3(h) of the regulations (7 CFR 29.3 (h)), has reviewed and considered the application, the testimony presented at the hearing, the exhibits received in evidence, and other available information. The Committee recommended to the Secretary that the application be granted and the Secretary approved the application on January 20, 1995.

Before a new market can be officially designated, a referendum must be held to determine that a two-thirds majority of producers favor the designation. It is hereby determined that the referendum will be held by mail during the period of February 6–10, 1995. The purpose of the referendum is to determine whether farmers who sold their tobacco on the designated markets at Kingstree and Hemingway are in favor of, or opposed to, the designation of the consolidated market for the 1995 and succeeding crop years. Accordingly, if a two-thirds majority of those tobacco producers voting in the referendum favor this consolidation, a new market will be designated as and will be called Kingstree-Hemingway.

To be eligible to vote in the referendum a tobacco producer must have sold flue-cured tobacco on either the Kingstree and Hemingway, South Carolina, auction markets during the 1994 marketing season. Any farmer who believes he or she is eligible to vote in the referendum but has not received a mail ballot by February 6, 1995, should immediately contact Larry L. Crabtree at (202) 205–0235.

The referendum will be held in accordance with the provisions for referenda of the Tobacco Inspection Act, as amended (7 U.S.C. 511d) and the regulations for such referendum set forth in 7 CFR 29.74.

Dated: January 27, 1995.

Lon Hatamiya,

Administrator.

[FR Doc. 95–2580 Filed 2–1–95; 8:45 am]

BILLING CODE 3410–02–P

Animal and Plant Health Inspection Service

9 CFR Part 94

[Docket No. 94–107–1]

Switzerland; Change in Disease Status

AGENCY: Animal and Plant Health Inspection Service, USDA.

ACTION: Proposed rule.

SUMMARY: We are proposing to declare Switzerland free of rinderpest, foot-and-mouth disease, and Exotic Newcastle disease (VVND). As part of this proposed action, we would add Switzerland to the lists of countries that, although declared free of rinderpest, foot-and-mouth disease, and VVND, are subject to restrictions on meat and other animal products offered for importation into the United States. Declaring Switzerland free of rinderpest, foot-and-mouth disease, and VVND appears to be appropriate because the last outbreak of rinderpest in Switzerland occurred in 1871, there have been no outbreaks of foot-and-mouth disease in Switzerland since 1980, and there have been no outbreaks of VVND in commercial production since 1989. This proposed rule would remove the prohibition on the importation into the United States, from Switzerland, of ruminants and fresh, chilled, and frozen meat of ruminants, although those importations would be subject to certain restrictions. This proposed rule would also relieve certain prohibitions and restrictions on the importation, from Switzerland, of milk and milk products of ruminants and of certain poultry and poultry products.

DATES: Consideration will be given only to comments received on or before April 3, 1995.

ADDRESSES: Please send an original and three copies of your comments to Chief, Regulatory Analysis and Development, PPD, APHIS, USDA, P.O. Drawer 810, Riverdale, MD 20738. Please state that your comments refer to Docket No. 94–107–1. Comments received may be inspected at USDA, room 1141, South Building, 14th Street and Independence Avenue SW., Washington, DC, between 8 a.m. and 4:30 p.m., Monday through Friday, except holidays. Persons wishing to inspect comments are requested to call ahead on (202) 690–2817 to facilitate entry into the comment reading room.

FOR FURTHER INFORMATION CONTACT: Dr. Kathleen Akin, Senior Staff Veterinarian, Import-Export Products Staff, National Center for Import-Export, Veterinary Services, APHIS, USDA, P.O. Drawer 810, Riverdale, MD 20738. The telephone number for the agency contact will change when agency offices in Hyattsville, MD, move to Riverdale, MD, during January. Telephone: (301) 436–7830 (Hyattsville); (301) 734–7830 (Riverdale).

SUPPLEMENTARY INFORMATION:

Background

The regulations in 9 CFR part 94 (referred to below as the regulations) govern the importation into the United States of specified animals and animal products in order to prevent the introduction into the United States of various animal diseases, including rinderpest, foot-and-mouth disease (FMD), and Exotic Newcastle disease (VVND). FMD and rinderpest are dangerous and destructive communicable diseases of ruminants and swine. VVND is a contagious, infectious, and communicable disease of poultry.

Section 94.1(a)(1) of the regulations provides that rinderpest or FMD exists in all countries of the world except those listed in § 94.1(a)(2), which have been declared to be free of both diseases. Section 94.6(a)(1) of the regulations provides that VVND exists in all countries of the world except those listed in § 94.6(a)(2), which have been declared to be free of VVND. We will consider declaring a country to be free of rinderpest, FMD, and VVND if there have been no reported cases of the diseases in that country for at least the previous 1-year period and no vaccinations for rinderpest, FMD, or VVND have been administered to swine, ruminants, or poultry in that country for at least the previous 1-year period.

The last outbreak of rinderpest in Switzerland occurred in 1871. There have been no outbreaks of FMD in Switzerland since 1980, and there have been no vaccinations for FMD in Switzerland since January 1991. There have been no outbreaks of VVND in commercial production since 1989. There was an isolated case this year which occurred in a backyard flock and is unrelated to the commercial poultry industry. Backyard flocks are owned by families for their personal consumption and are separate from commercial production. This case included a flock of 6 birds located in a remote valley in the Swiss Alps. Based on these considerations, the government of Switzerland has requested that the United States Department of Agriculture (USDA) declare Switzerland free of FMD, rinderpest, and VVND.

The Animal and Plant Health Inspection Service (APHIS) reviewed

the documentation submitted by the government of Switzerland in support of its request, and a team of APHIS officials travelled to Switzerland in 1994 to conduct an on-site evaluation of the country's animal health program with regard to the rinderpest, FMD, and VVND situation in Switzerland. The evaluation consisted of a review of Switzerland's veterinary services, laboratory and diagnostic procedures, vaccination practices, and administration of laws and regulations intended to prevent the introduction of rinderpest, FMD, and VVND into Switzerland through the importation of animals, meat, or animal products. The APHIS officials conducting the on-site evaluation concluded that Switzerland is free of rinderpest, FMD, and VVND. (Details concerning the on-site evaluation are available, upon written request, from the person listed under FOR FURTHER INFORMATION CONTACT.)

Therefore, based on the information discussed above, we are proposing to amend § 94.1(a)(2) by adding Switzerland to the list of countries declared to be free of both rinderpest and FMD. We are also proposing to amend § 94.6(a)(2) by adding Switzerland to the list of countries declared to be free of VVND. These proposed actions would remove the prohibition on the importation, from Switzerland, of ruminants and fresh, chilled, and frozen meat of ruminants, and would relieve restrictions on the importation, from Switzerland, of milk and milk products of ruminants and of poultry and poultry products. However, because Switzerland has not been declared free of hog cholera, the importation into the United States, from Switzerland, of pork and pork products would continue to be restricted under § 94.9 of the regulations, and the importation of swine from Switzerland would continue to be prohibited under § 94.10. Because Switzerland has not been declared free of bovine spongiform encephalopathy (BSE), the importation into the United States, from Switzerland, of ruminant meat and edible products from ruminants would continue to be restricted under § 94.18 of the regulations. Also, for the reasons discussed below, we would make the importation of the meat and other animal products of ruminants or swine from Switzerland subject to the restrictions contained in § 94.11.

We are proposing to amend § 94.11(a) by adding Switzerland to the list of countries that have been declared free of rinderpest and FMD but from which the importation of meat and other animal products is restricted. The countries listed in § 94.11(a) are subject to these restrictions because they: (1) Supplement their national meat supply by importing fresh, chilled, or frozen meat of ruminants or swine from countries that are designated in § 94.1(a) as infected with rinderpest or FMD; (2) have a common land border with a country designated as infected with rinderpest or FMD; or (3) import ruminants or swine from countries designated as infected with rinderpest or FMD under conditions less restrictive than would be acceptable for importation into the United States.

Switzerland supplements its national meat supply by the importation of fresh, chilled, and frozen meat of ruminants and swine from countries designated in § 94.1(a)(1) as countries in which rinderpest or FMD exists. In addition, Switzerland has common land borders with Austria, France, Germany, and Italy. Italy is designated in § 94.1(a)(1) as a country in which rinderpest or FMD exists. As a result, even though Switzerland appears to qualify for designation as a country free of rinderpest and FMD, there is the potential that meat or other animal products produced in Switzerland may be commingled with the fresh, chilled, or frozen meat of animals from a country in which rinderpest or FMD exists. This potential for commingling constitutes an undue risk of introducing rinderpest or FMD into the United States.

Therefore, we are proposing that meat and other animal products of ruminants or swine, as well as the ship stores, airplane meals, or baggage containing such meat or other animal products, offered for importation into the United States from Switzerland be subject to the restrictions specified in § 94.11 of the regulations and to the applicable requirements contained in the regulations of the USDA's Food Safety and Inspection Service at 9 CFR chapter III. Section 94.11 generally requires that the meat and other animal products of ruminants or swine be: (1) Prepared in an inspected establishment that is eligible to have its products imported into the United States under the Federal Meat Inspection Act; and (2) accompanied by an additional certification from a full-time salaried veterinary official of the national government of the exporting country, stating that the meat or other animal product has not been commingled with or exposed to meat or other animal products originating in, imported from, or transported through a country infected with rinderpest or FMD.

Executive Order 12866 and Regulatory Flexibility Act

This proposed rule has been reviewed under Executive Order 12866. For this action, the Office of Management and Budget has waived its review process required by Executive Order 12866.

This proposed rule, if adopted, would amend the regulations in part 94 by adding Switzerland to the list of countries declared to be free of rinderpest and FMD and to the list of countries declared free of VVND. This action would remove the prohibition on the importation into the United States, from Switzerland, of ruminants and poultry and fresh, chilled, and frozen meat of ruminants and poultry, although those importations would be subject to certain restrictions. This proposed revision would also relieve restrictions on the importation, from Switzerland, of milk and milk products of ruminants. This action would not relieve certain restrictions on the importation of live swine and fresh, chilled, and frozen meat of swine from Switzerland because Switzerland is still considered to be affected with hog cholera. Similarly, this action would not relieve certain restrictions on the importation from Switzerland, of ruminant meat and edible products from ruminants because BSE exists in Switzerland.

Based on available information, the Department does not anticipate a major increase in exports of ruminants and fresh, chilled, or frozen meat of ruminants or poultry from Switzerland into the United States as a result of this proposed rule.

The primary effects due to the proposed change in the regulations would be limited to bovine meat and prepared products, since swine and swine products are excluded because of restrictions due to hog cholera, live cattle and breeding material are excluded due to BSE, and there is no sheep, lamb, or goat production in Switzerland (USDA, National Agricultural Statistics Service (NASS), ''Agricultural Statistics,'' 1993). Commencement of such production is not expected due to the proposed regulation change. The impact of increased beef imports resulting from the proposed regulation changes would likely be minimal because the cattle industry in Switzerland is relatively small and high cost compared to the United States domestic market. Cattle inventories in Switzerland were estimated to be about 1.78 million head in 1993, while U.S. inventories were over 101 million head in 1993 (USDA, Foreign Agricultural Service, Switzerland's Annual Livestock Report,

August 8, 1994 and USDA, NASS, ''Agricultural Statistics,'' 1993).

Due to current APHIS restrictions, the United States does not import any uncooked meat or meat products from Switzerland. Total meat production in the United States in 1992 was just under 18.587 million metric tons, while Swiss meat production in 1992 reached approximately 429,000 metric tons, about 2.3 percent of the United States total (USDA, National Agricultural Statistics Service, ''Agricultural Statistics,'' 1993). Therefore, even if Switzerland exported a significant portion of its meat production exclusively to the United States, which is unlikely, the effect of those exports on United States domestic prices or supplies would be negligible.

As with the ruminants and meat products discussed above, the Department does not anticipate a major increase in exports of milk and milk products from Switzerland into the United States as a result of this proposed rule. The importation into the United States of all dairy products, except for casein and other caseinates, is restricted by quotas. Although the importation of casein into the United States is not regulated by quotas, world prices of casein are competitively set. The United States does not produce casein, but does import more than half of the casein produced in the world. The regulations currently allow casein and other caseinates to be imported into the United States from countries where rinderpest or FMD exists if the importer has applied for and obtained written permission from the Administrator. The United States did not import any casein from Switzerland in 1993 (USDA, Economic Research Service (ERS), ''Foreign Agricultural Trade of the United States: Calendar Year 1993 Supplement,'' 1993). Declaring Switzerland free of rinderpest and FMD, thus removing the requirement for written permission from the Administrator, is not expected to have any effect on the amount of casein imported into the United States from Switzerland because the current restrictions do not substantially impede imports.

Imports of poultry and poultry products into the United States from Switzerland in 1992 and 1993 fell into two categories: live poultry and feathers and down. Total live poultry imports into the United States were valued at $14.4 million and $14.5 million in 1992 and 1993, respectively. United States live poultry imports from Switzerland were valued at $67 thousand and $74 thousand in 1992 and 1993, respectively, about 0.5 percent of the total imports. Total United States imports of feathers and down were valued at $84 million and $60.1 million in 1992 and 1993, respectively. United States imports of feathers and down from Switzerland were valued at $1.2 million and $0.41 million in 1992 and 1993, respectively, less than 1.5 percent of the total imports (USDA, ERS, ''Foreign Agricultural Trade of the United States: Calendar Year 1993 Supplement,'' 1993). Also, Switzerland is dependent on imports for over 50 percent of domestic poultry consumption. Consequently, proposed changes in current regulations concerning VVND are not expected to result in increased exports to the United States.

Under these circumstances, the Administrator of the Animal and Plant Health Inspection Service has determined that this action would not have a significant economic impact on a substantial number of small entities.

Executive Order 12778

This proposed rule has been reviewed under Executive Order 12778, Civil Justice Reform. If this proposed rule is adopted: (1) All State and local laws and regulations that are inconsistent with this rule will be preempted; (2) no retroactive effect will be given to this rule; and (3) administrative proceedings will not be required before parties may file suit in court challenging this rule.

Paperwork Reduction Act

This proposed rule contains no information collection or recordkeeping requirements under the Paperwork Reduction Act of 1980 (44 U.S.C. 3501 et seq.).

List of Subjects in 9 CFR Part 94

Animal diseases, Imports, Livestock, Meat and meat products, Milk, Poultry and poultry products, Reporting and recordkeeping requirements.

Accordingly, 9 CFR part 94 would be amended as follows:

PART 94—RINDERPEST, FOOT-AND-MOUTH DISEASE, FOWL PEST (FOWL PLAGUE), VELOGENIC VISCEROTROPIC NEWCASTLE DISEASE, AFRICAN SWINE FEVER, HOG CHOLERA, AND BOVINE SPONGIFORM ENCEPHALOPATHY: PROHIBITED AND RESTRICTED IMPORTATIONS

1. The authority citation for part 94 would continue to read as follows:

Authority: 7 U.S.C. 147a, 150ee, 161, 162, and 450; 19 U.S.C. 1306; 21 U.S.C. 111, 114a, 134a, 134b, 134c, 134f, 136, and 136a; 31 U.S.C. 9701; 42 U.S.C. 4331, 4332; 7 CFR 2.17, 2.51, and 371.2(d).

§ 94.1 [Amended]

2. In § 94.1, paragraph (a)(2) would be amended by adding ''Switzerland,'' immediately after ''Sweden,''.

§ 94.6 [Amended]

4. In § 94.6, paragraph (a)(2) would be amended by removing ''and Sweden.'' and adding ''Sweden, and Switzerland.'' in its place.

§ 94.11 [Amended]

5. In § 94.11, paragraph (a), the first sentence would be amended by removing ''and Sweden,'' and adding ''Sweden, and Switzerland,'' in its place.

Done in Washington, DC, this 27th day of January 1995.

Terry L. Medley,

Acting Administrator, Animal and Plant Health Inspection Service.

[FR Doc. 95–2588 Filed 2–1–95; 8:45 am]

BILLING CODE 3410–34–P

DEPARTMENT OF TRANSPORTATION

Federal Aviation Administration

14 CFR Part 25

[Docket No. NM–105, Notice No. SC–95–1–NM]

Special Conditions: Saab Aircraft AB Model Saab 2000 Series Airplanes

AGENCY: Federal Aviation Administration, DOT.

ACTION: Notice of proposed special conditions.

SUMMARY: This notice proposes special conditions for the Saab Aircraft AB Model Saab 2000 airplane. This airplane will have novel and unusual design features, relating to its electronic flight control system, when compared to the state of technology envisioned in the airworthiness standards of part 25 of the Federal Aviation Regulations (FAR). This notice contains the additional safety standards which the Administrator considers necessary to establish a level of safety equivalent to that provided by the airworthiness standards of part 25

DATES: Comments must be received on or before March 6, 1995.

ADDRESSES: Comments may be mailed in duplicate to: Federal Aviation Administration, Transport Airplane Directorate (ANM–100), Attn: Docket No. NM–105, 1601 Lind Avenue SW., Renton, Washington 98055–4056; or delivered in duplicate to the Transport Airplane Directorate at the above address. Comments must be marked

Docket No. NM–105. Comments may be inspected in the Rule Docket weekdays, except Federal holidays, between 7:30 and 4:00 p.m.

FOR FURTHER INFORMATION CONTACT:

Mark I. Quam, FAA, Standardization Branch, ANM–113, Transport Standards Staff, Transport Airplane Directorate, Aircraft Certification Service, 1601 Lind Avenue SW., Renton, Washington 98055–4056; telephone (206) 227–2145, facsimile (206) 227–1320.

SUPPLEMENTARY INFORMATION:

Comments Invited

Interested persons are invited to participate in the making of these proposed special conditions by submitting such written data, views, or arguments as they may desire. Communications should identify the regulatory docket or notice number and be submitted in duplicate to the address specified above. All communications received on or before the closing date of comments will be considered by the Administrator before further rulemaking action on this proposal is taken. The proposals contained in this notice may be changed in light of the comments received. All comments received will be available in the Rules Docket, both before and after the closing date for comments, for examination by interested parties. A report summarizing such substantive public contact with FAA personnel concerning this rulemaking will be filed in the docket. Commenters wishing the FAA to acknowledge receipt of their comments submitted in response to this notice must include a self-addressed, stamped postcard on which the following statement is made; ''Comments to Docket No. NM–105.'' The postcard will be date stamped and return to the commenter.

Background

Special conditions are prescribed under the provisions of § 21.16 of the FAR when the applicable regulations for type certification do not contain adequate or appropriate standards because of novel or unusual design features. The new Saab 2000 incorporates a number of such design features.

The Saab 2000, certified on April 29, 1994, is a twin-engined, low-wing, pressurized turboprop aircraft that is configured for approximately 50 passengers. The airplane has two Allison Engine Company AE 2100A engines rated at 3650 shp. The propeller is a 6 bladed Dowty Rotol swept shaped propeller. A single lever controls each prop/engine combination. An Auxiliary Power Unit (APU) will be installed in the tail. The airplane has provisions for two pilots, an observer, two flight attendants, overhead bins, a toliet, and provisions for the installation of a galley. There is a forward and aft stowage compartment and an aft cargo compartment. The airplane has a maximum operating altitude of 31,000 feet.

The Saab 2000 has a fully hydraulically powered electronically controlled rudder and will have fully hydraulically powered electronically controlled elevators as a follow-on design modification. The Powered Elevator Control System (PECS) provides control and power actuation of the left and right elevator surfaces. The PECS also provides aircraft stability augmentation and trim functions.

The proposed elevator system is in many respects similar to the rudder design and is comprised of a mix of analog and digital circuitry and has no mechanical backup. Control columns are connected to Linear Variable Differential Transducers (LVDT), stick damper(s), auto pilot servo, linear springs with break-outs and are interconnected with an electronic disconnect unit.

The position transducers (LVDT), connected to the control columns, provide signals to two Powered Elevator Control Units (PECU). Each PECU controls two Elevator Servo Actuators (ESA) through two separate Servo Actuator Channels (SAC). Each SAC is subdivided into a primary control lane and a monitor lane. Two of the four ESAs, controlled by one PECU, positions one elevator side.

The ESAs have two modes of operation, active and damped. The active mode will result when mode control current from the PECU and hydraulic pressure are available. One active servo actuator is sufficient to operate the elevator surface.

Elevator Servo Actuators value and actuator ram position feedback are provided by position transducers (LVDT). The PECUs are connected to one Flight Control Computer via the trim relay and two Digital Air Data Computers. The flight control computer also provides a signal to the auto pilot servo.

Stick to elevator gearing is a function of Indicated Airspeed (IAS). Trim and stability augmentation are based on IAS, vertical acceleration and flap position. Stick, trim and elevator position and status information are fed to the Engine Indicating and Crew Alerting System (EICAS).

Each PECU has built in Automatic Preflight Built in Test (PBIT) and Continuous Built In Test (CBIT) circuitry and utilizing cross channel monitoring.

The elevator's actuators are supplied by three hydraulic circuits that are physically separated, isolated, fused and located to minimize common cause failures. The Number 1 hydraulic circuit is powered by the left engine and a backup DC pump and accumulators. The Number 2 hydraulic circuit is powered by the right engine and a backup AC pump and accumulators. The Number 3 hydraulic circuit is powered by an AC driven pump.

The Number 1 hydraulic circuit powers the left hand (LH) and right hand (RH) outboard servo actuators. The Number 2 hydraulic circuit powers the RH inboard servo actuator. The Number 3 hydraulic circuit powers the LH inboard servo actuator.

Hydraulic warnings and cautions in the event of hydraulic supply failure are provided by the EICAS.

The elevator system is electrically supported by two system sides, a LH and a RH side. The electrical system is normally powered by two AC generators, each driven by a propeller gear box. An APU equipped with a standby generator is installed. When only one of the three generators is working, it supplies power to both LH and RH sides.

Each LH and RH AC system side is connected via a Transformer Rectifier Unit (TRU) to a LH and RH DC system made up of a network of DC buses. A third center TRU is connected to a center circuit. The LH, RH and center buses can be supplied from batteries or from the TRUs. The center TRU will replace a failed RH or LH TRU. When only one TRU unit is working, the LH and RH buses are tied together with power being received from the remaining TRU.

Two DC feeders in addition to two AC feeders provide power aft of the debris zone. The LH side is routed through the ceiling and the RH side is routed through the floor.

Type Certification Basis

The applicable requirements for U.S. type certification must be established in accordance with §§ 21.16, 21.17, 21.19, 21.29, and 21.101 of the FAR. Accordingly, based on the application date of June 9, 1989, and Saab Aircraft AB volunteering for certain later regulations, the TC basis for the Saab 2000 airplane is as follows:

Part 25 as amended by Amendments 25–1 through 25–71.

Part 25, the following sections as amended by Amendment 25–72:

§ 25.361 Engine torque.
§ 25.365 Pressurized compartment loads.
§ 25.571 Damage tolerance and fatigue evaluation of structure.
§ 25.772 Pilot compartment doors.
§ 25.773 Pilot compartment view.
§ 25.783(g) Doors.
§ 25.905(d) Propellers.
§ 25.933 Reversing systems.

Part 25, Amdt. 25–73 through 25–76.

Part 34, as amended on the date of issuance of the type certificate.

Part 36, as amended on the date of issuance of the type certificate.

Special Conditions No. 25–ANM–66, dated 1/12/93, for Lightning and HIRF Protection.

Special Conditions No. 25–ANM–82, dated 3/11/94, for Interaction of Systems and Structure.

Special conditions, as appropriate, are issued in accordance with § 11.49 of the FAR after public notice, as required by §§ 11.28 and 11.29(b), and become part of the type certification basis in accordance with § 21.101(b)(2).

Discussion

Special Conditions No. 25–ANM–82 were written for the rudder and in anticipation of the installation of the powered elevator. However, as the Saab 2000 could be flown without rudder control during certain failure conditions, and the elevator system was not installed for initial certification, Special Conditions No. 25–ANM–82 were limited to requirements common to both the rudder and follow-on-elevator. The Saab 2000, however, requires control and power to the elevator all the time for safe flight and landing. Therefore, special conditions in addition to No. 25–ANM–82 are proposed for the powered elevator. The proposed type design of the Saab 2000 contains novel or unusual design features not envisioned by the applicable part 25 airworthiness standards and therefore special conditions are considered necessary in the following areas:

Systems

1. *Operation Without Normal Electrical Power.* In the Saab 2000, a source of electrical power is required by the elevator electronic flight control system. Service experience with traditional airplane designs has shown that the loss of electrical power generated by the airplane's engines is not extremely improbable. The electrical power system of the Saab 2000 must therefore be designed with standby or emergency electrical sources of sufficient reliability and capacity to power essential loads in the event of the loss of normally generated electrical power. The need for electrical power for electronic flight controls was not envisioned by part 25 since in traditional designs, cables and hydraulics are utilized for the flight control system. Therefore, Special Condition No. 1 is proposed.

2. *Command Signal Integrity.* Command and control of the control surfaces will be achieved by fly-by-wire systems that will utilize electronic (AC, DC, or digital) interfaces. These interfaces involve not only the commands to the control surfaces, but all the control feedback and sensor input signals as well. These signal paths, as well as the electronic equipment that manages them, can be susceptible to damage that may cause unacceptable or unwanted control responses. The damage may originate from electrical equipment failures, mechanical equipment failures or external damage. Therefore, special designs are needed to maintain the integrity of the fly-by-wire interfaces to an immunity level equivalent to that of traditional hydro-mechanical designs. Similar to the conventional steel cable controls, positioning of the electrical control equipment and routing of wire bundles must provide separation and redundancy to ensure maximum protection from damage due to a common cause. Therefore, Special Condition No. 2 is proposed.

3. *Design Maneuver Requirements.* In a conventional airplane, pilot inputs directly affect control surface movement (both rate and displacement) for a given flight condition. In the Saab 2000, the pilot provides only one of several inputs to the control surfaces, and it is possible that the pilot control displacements specified in §§ 25.331(c)(1), 349(a), and 351 of the FAR may not result in the maximum displacement and rates of displacement of the elevator. The intent of these noted rules may not be satisfied if literally applied. Therefore, Special Condition No. 3 is proposed.

Special conditions may be issued and amended as necessary, as part of the type certification basis if the Administrator finds that the airworthiness standards designated in accordance with § 21.17(a)(1) do not contain adequate or appropriate safety standards because of novel or unusual design features of an airplane. Special conditions, as appropriate, are issued in accordance with § 11.49 after public notice as required by §§ 11.28 and 11.29(b), effective October 14, 1980, and will become part of the type certification basis in accordance with § 21.17(a)(2).

Conclusion: This action affects only certain unusual or novel design features on one model series of airplanes. It is not a rule of general applicability and affects only the manufacturer who applied to the FAA for approval of these features on the airplanes.

List of Subjects in 14 CFR Part 25

Air transportation, Aircraft, Aviation safety, Safety.

The authority citation for these proposed special conditions is as follows: Authority: 49 U.S.C. 1344, 1348(c), 1352, 1354(a), 1355, 1421 through 1431, 1502, 1651(b)(2); 42 U.S.C. 1857f–10, 4321 et seq.; E.O. 11514; and 49 U.S.C. 106(g).

The Proposed Special Conditions

Accordingly, the Federal Aviation Administration (FAA) proposes the following special conditions as part of the type certification basis for the Saab Aircraft AB Saab 2000 series airplanes.

1. *Operations without Normal Electrical Power.* In lieu of compliance with § 25.1351(d), it must be demonstrated by test, or combination of test and analysis, that the airplane can continue safe flight and landing with inoperative normal engine generated electrical power (electrical power sources excluding the battery and any other standby electrical sources). The airplane operation should be considered at the critical phase of flight and include the ability to restart the engines and maintain flight for the maximum diversion time capability being certified.

Discussion: The Electronic Flight Control System installations establish the criticality of the electrical power generation and distribution systems, since the loss of all electrical power may be catastrophic to the aircraft.

The Saab 2000 fly-by-wire control system requires a continuous source of electrical power in order to maintain the flight control system. The current § 25.1351(d), ''Operation Without Normal Electrical Power,'' requires safe operation in visual flight rules (VFR) conditions for at least five minutes with inoperative normal power. This rule was structured around a traditional design utilizing mechanical control cables for flight control while the crew took time to sort out the electrical failure and was able to re-establish some of the electrical power generation capability.

In order to maintain the same level of safety associated with traditional designs, the Saab 2000 design must not be time limited in its operation without the normal source of engine generated electrical power. It should be noted that service experience has shown that the loss of all electrical power which is generated by the airplane's engines is not extremely improbable. Thus, it must be demonstrated that the airplane can continue safe flight and landing with the use of its emergency electrical power systems (batteries, auxiliary power unit, etc.). This emergency electrical power system must be

able to power loads that are essential for continued safe flight and landing. Also, the availability of emergency electrical power sources, including any credit taken for APU start reliability, must be validated in a manner acceptable to the FAA.

The emergency electrical power system must be designed to supply:

—Electrical power required for immediate safety, which must continue to operate without the need for crew action following the loss of the normal electrical power system;

—Electrical power required for continued safe-flight and landing;

—Electrical power required to restart the engines.

For compliance purposes:

1. A test demonstration of the loss of normal engine generated power is to be established such that:

a. The failure condition should be assumed to occur during night instrument meteorological conditions (IMC) at the most critical phase of flight relative to the electrical power system design and distribution of equipment loads on the system.

b. After the unrestorable loss of the source of normal electrical power, the airplane engines must be capable of being restarted and operations continued in IMC until visual meteorological conditions (VMC) can be reached. (A reasonable assumption can be made that turbine engine driven transport category airplanes will not have to remain in IMC for more than 30 minutes after experiencing the loss of normal electrical power).

c. After 30 minutes of operation in IMC, the airplane should be demonstrated to be capable of continuous safe flight and landing in VMC conditions. The length of time in VMC conditions must be computed based on the maximum flight duration capability for which the airplane is being certified. Consideration for speed reductions resulting from the associated failure must be made.

2. Since the availability of the emergency electrical power system operation is necessary for safe-flight, this system must be available before each flight.

3. The emergency electrical power system must be shown to be satisfactorily operational in all flight regimes.

2. *Command Signal Integrity*. In addition to compliance with § 25.671 of the FAR, it must be shown that for the elevator Electronic Flight Control System (EFCS):

(a) Signals cannot be altered unintentionally, or that the altered signal characteristics are such that the control authority characteristics will not be degraded to a level that will prevent continued safe-flight and landing; and

(b) Routing of wire EFCS wires and wire hundles must provide separation and redundancy to ensure maximum protection from damage due to common cause.

Discussion: The Saab 2000 will be using fly-by-wire (FBW) as a means to command and control the elevator surface actuators. In the FBW design being presented, command and control of the control surfaces will be achieved by electronic (AC, DC, or digital) interfaces. These interfaces involve not only the direct commands to the elevator control surfaces, but feedback and sensor signals as well.

Malfunctions could cause system instabilities, loss of function or freeze-up of the control actuator. It is imperative that after failure at least one path of the command signal, that is capable of providing safe flight and landing, remains continuous and unaltered.

The current regulations, which primarily address hydro-mechanical flight control systems, §§ 25.671 and 25.672, make no specific or implied reference that command and control signals remain unaltered from external interferences. Present designs feature steel cables and pushrods as a means to control hydraulic surface actuators. These designs are easily identifiable relative to the understanding that they are necessary for safe flight and landing and thus should be protected and continually inspected. However, the FBW designs are not easily discernible from non-essential electronics where placement of equipment and wire runs is not critical. Therefore, FBW requires additional attention when locating the equipment and wire runs.

It should be noted that:

—The proposed wording ''signals cannot be altered unintentionally'' is used in the Special Condition to emphasize the need for design measures to protect the FBW control system from the effects of the fluctuations in electrical power, accidental damage, environmental factors such as temperature, local fires, exposure to reactive fluids, etc. and any disruptions that may affect the command signals as they are being transmitted from their source of origin to the Power Control Actuators.

3. *Design Maneuver Requirements*. (a) In lieu of compliance with § 25.331(c)(1) of the FAR, the airplane is assumed to be flying in steady level flight (point A1 within the maneuvering envelope of § 25.333(b) and, except as limited by pilot effort in accordance with § 25.397(b), the cockpit pitching control device is suddenly moved to obtain extreme positive pitching acceleration (nose up). In defining the tail load condition, the response of the airplane must be taken into account. Airplane loads which occur subsequent to the point at which the normal acceleration at the center of gravity exceeds the maximum positive limit maneuvering factor, n, need not be considered.

(b) In addition to the requirements of § 25.331(c), it must be established that pitch maneuver loads induced by the system itself (e.g. abrupt changes in orders made possible by electrical rather than mechanical combination of different inputs) are acceptably accounted for.

Issued in Renton, Washington, on January 24, 1995.

Ronald T. Wojnar,

Manager, Transport Airplane Directorate, Aircraft Certification Service, ANM–100.

[FR Doc. 95–2565 Filed 2–1–95; 8:45 am]

BILLING CODE 4910–13–M

14 CFR Part 39

[Docket No. 94–CE–29–AD]

Airworthiness Directives; Twin Commander Aircraft Corporation Models 690C and 695 Airplanes

AGENCY: Federal Aviation Administration, DOT.

ACTION: Notice of proposed rulemaking (NPRM).

SUMMARY: This document proposes to adopt a new airworthiness directive (AD) that would apply to certain Twin Commander Aircraft Corporation (Twin Commander) Models 690C and 695 airplanes. The proposed action would require initially inspecting the wing structure for cracks, modifying any cracked wing structure, and, if not cracked, either repetitively inspecting or modifying the wing structure. Results of full-scale fatigue testing that indicated areas in the wing that are subject to fatigue cracks prompted the proposed action. The actions specified by the proposed AD are intended to prevent wing damage caused by fatigue cracking, which, if not detected and corrected, could progress to the point of structural failure.

DATES: Comments must be received on or before April 9, 1995.

ADDRESSES: Submit comments in triplicate to the Federal Aviation Administration (FAA), Central Region, Office of the Assistant Chief Counsel, Attention: Rules Docket No. 94–CE–29–AD, Room 1558, 601 E. 12th Street, Kansas City, Missouri 64106. Comments may be inspected at this location between 8 a.m. and 4 p.m., Monday through Friday, holidays excepted.

Service information that applies to the proposed AD may be obtained from the Twin Commander Aircraft Corporation, 19010 59th Drive, NE, Arlington, Washington 98223. This information also may be examined at the Rules Docket at the address above.

FOR FURTHER INFORMATION CONTACT: Mr. Mike Pasion, Aerospace Engineer, FAA, Northwest Mountain Region, 1601 Lind Avenue S.W., Renton, Washington 98055–4056; telephone (206) 227–2594; facsimile (206) 227–1181.

SUPPLEMENTARY INFORMATION:

Comments Invited

Interested persons are invited to participate in the making of the proposed rule by submitting such written data, views, or arguments as they may desire. Communications should identify the Rules Docket number and be submitted in triplicate to the address specified above. All

communications received on or before the closing date for comments, specified above, will be considered before taking action on the proposed rule. The proposals contained in this notice may be changed in light of the comments received.

Comments are specifically invited on the overall regulatory, economic, environmental, and energy aspects of the proposed rule. All comments submitted will be available, both before and after the closing date for comments, in the Rules Docket for examination by interested persons. A report that summarizes each FAA-public contact concerned with the substance of this proposal will be filed in the Rules Docket.

Commenters wishing the FAA to acknowledge receipt of their comments submitted in response to this notice must submit a self-addressed, stamped postcard on which the following statement is made: ''Comments to Docket No. 94–CE–29–AD.'' The postcard will be date stamped and returned to the commenter.

Availability of NPRMs

Any person may obtain a copy of this NPRM by submitting a request to the FAA, Central Region, Office of the Assistant Chief Counsel, Attention: Rules Docket No. 94–CE–29–AD, Room 1558, 601 E. 12th Street, Kansas City, Missouri 64106.

Discussion

Recently, the FAA become aware of an unsafe condition that could exist on Twin Commander Models 690C and 695 airplanes. Full-scale fatigue testing of the wing and the wing carry-through and pressure vessel structures has revealed that these areas are susceptible to fatigue cracking.

Twin Commander has issued Service Bulletin (SB) No. 213, dated July 29, 1994, which specifies procedures for inspecting and modifying the wing structure.

After examining the circumstances and reviewing all available information related to the test results described above, including the referenced service information, the FAA has determined that AD action should be taken to prevent wing damage caused by fatigue cracking, which, if not detected and corrected, could progress to the point of structural failure.

Since an unsafe condition has been identified that is likely to exist or develop in other Twin Commander Models 690C and 695 airplanes, the proposed AD would require initially inspecting the wing structure for cracks, modifying any cracked wing structure, and, if not cracked, either repetitively inspecting or modifying the wing structure. The proposed actions would be accomplished in accordance with Twin Commander SB No. 213, dated July 29, 1994.

The FAA is establishing the compliance time of the proposed initial and first repetitive inspection to coincide with the 6,000-hour Major Inspection Guide I and 7,500-hour Major Inspection Guide II inspections, respectively.

The FAA estimates that 86 airplanes in the U.S. registry would be affected by the proposed AD, that it would take approximately 66 workhours per airplane to accomplish the proposed inspection, and that the average labor rate is approximately $60 an hour. Based on these figures, the total cost impact of the proposed AD on U.S. operators is estimated to be $320,560. This figure does not take into account the cost of repetitive inspections or the cost of any modifications that may be needed based on the inspection results. The FAA has no way of determining how many wing structures may be cracked and need modification, or how many repetitive inspections each owner/operator may incur over the life of the airplane.

The regulations proposed herein would not have substantial direct effects on the States, on the relationship between the national government and the States, or on the distribution of power and responsibilities among the various levels of government. Therefore, in accordance with Executive Order 12612, it is determined that this proposal would not have sufficient federalism implications to warrant the preparation of a Federalism Assessment.

For the reasons discussed above, I certify that this action (1) is not a ''significant regulatory action'' under Executive Order 12866; (2) is not a ''significant rule'' under DOT Regulatory Policies and Procedures (44 FR 11034, February 26, 1979); and (3) if promulgated, will not have a significant economic impact, positive or negative, on a substantial number of small entities under the criteria of the Regulatory Flexibility Act. A copy of the draft regulatory evaluation prepared for this action has been placed in the Rules Docket. A copy of it may be obtained by contacting the Rules Docket at the location provided under the caption **ADDRESSES**.

List of Subjects in 14 CFR Part 39

Air transportation, Aircraft, Aviation safety, Safety.

The Proposed Amendment

Accordingly, pursuant to the authority delegated to me by the Administrator, the Federal Aviation Administration proposes to amend part 39 of the Federal Aviation Regulations (14 CFR part 39) as follows:

PART 39—AIRWORTHINESS DIRECTIVES

1. The authority citation for part 39 continues to read as follows:

Authority: 49 U.S.C. App. 1354(a), 1421 and 1423; 49 U.S.C. 106(g); and 14 CFR 11.89.

§ 39.13 [Amended]

2. Section 39.13 is amended by adding a new AD to read as follows:

Twin Commander Aircraft Corporation: Docket No. 94–CE–29–AD.

Applicability: The following airplane models and serial numbers, certificated in any category:

Model	Serial No.
690C	11600 through 11735.
695	95000 through 95084.

Compliance: Required upon the accumulation of 6,000 hours time-in-service (TIS) or within the next 50 hours TIS after the effective date of this AD, whichever occurs later, unless already accomplished, and thereafter as indicated in the body of this AD.

To prevent wing damage caused by fatigue cracking, which, if not detected and corrected, could progress to the point of structural failure, accomplish the following:

(a) For all affected serial number Model 695 airplanes, and any Model 690C airplane incorporating a serial number in the 11600 through 11730 range, inspect the wing structure for cracks in accordance with the PART I ACCOMPLISHMENT INSTRUCTIONS (INSPECTIONS) section of Twin Commander Service Bulletin (SB) No. 213, dated July 29, 1994.

(b) For any Model 690C airplane incorporating a serial number in the 11731 through 11735 range, inspect the wing structure for cracks in accordance with Item 10 of the PART I ACCOMPLISHMENT INSTRUCTIONS (INSPECTIONS) section of Twin Commander SB No. 213, dated July 29, 1994.

(c) If, during the inspections required in paragraphs (a) and (b) of this AD, cracks are found in the areas referenced in Figures 1 through 5 and the instructions of the service information referenced above, prior to further flight, replace the damaged structure and modify the wing structure in accordance with the PART II ACCOMPLISHMENT INSTRUCTIONS (MODIFICATIONS) section of Twin Commander SB No. 213, dated July 29, 1994.

(d) If no cracks are found, accomplish one of the following:

(1) For all airplanes, upon the accumulation of 7,500 hours TIS or within

1,000 hours TIS after the initial inspection, whichever occurs later, reinspect the structure in accordance with either paragraph (a) or (b) of this AD, as applicable, and reinspect thereafter at intervals not to exceed 1,000 hours TIS, and, if applicable, replace any damaged part or modify the wing structure as specified in paragraph (c) of this AD; or

(2) For Model 695 airplanes and any Model 690C airplane incorporating a serial number in the 11600 through 11730 range, prior to further flight, modify the wing structure in accordance with the PART II ACCOMPLISHMENT INSTRUCTIONS (MODIFICATIONS) section of Twin Commander SB No. 213, dated July 29, 1994.

(e) For Model 695 airplanes and any Model 690C airplane incorporating a serial number in the 11600 through 11730 range, the modification referenced in paragraphs (c) and (d)(2) of this AD may be accomplished any time after the initial inspection as terminating action for the repetitive inspection requirement of this AD, except for the inspection of the doublers at the wing attach fittings located in the Fuselage Station 144 frame (Item 10 of PART I ACCOMPLISHMENT INSTRUCTIONS (INSPECTIONS) section of the Twin Commander SB No. 213, dated July 29, 1994. All affected model and serial number airplanes must inspect in this area at every 1,000 hours TIS.

Note 1: For those airplanes that have not accumulated 6,000 hours TIS, the initial and first repetitive inspection required by this AD were established to coincide with the 6,000-hour Major Inspection Guide I and 7,500-hour Major Inspection Guide II inspections, respectively, so that the operator may schedule the required action in accordance with these major inspections.

(f) Special flight permits may be issued in accordance with sections 21.197 and 21.199 of the Federal Aviation Regulations (14 CFR 21.197 and 21.199) to operate the airplane to a location where the requirements of this AD can be accomplished.

(g) An alternative method of compliance or adjustment of the compliance time that provides an equivalent level of safety may be approved by the Manager, Seattle Aircraft Certification Office (ACO), FAA, Northwest Mountain Region, 1601 Lind Avenue S.W., Renton, Washington 98055–4056. The request shall be forwarded through an appropriate FAA Maintenance Inspector, who may add comments and then send it to the Manager, Seattle ACO.

Note 2: Information concerning the existence of approved alternative methods of compliance with this AD, if any, may be obtained from the Seattle ACO.

(h) All persons affected by this directive may obtain copies of the document referred to herein upon request to the Twin Commander Aircraft Corporation, 19010 59th Drive, NE., Arlington, Washington 98223; or may examine this document at the FAA, Central Region, Office of the Assistant Chief Counsel, Room 1558, 601 E. 12th Street, Kansas City, Missouri 64106.

Issued in Kansas City, Missouri, on January 26, 1995.

Michael K. Dahl,

Acting Manager, Small Airplane Directorate, Aircraft Certification Service.

[FR Doc. 95–2406 Filed 2–1–95; 8:45 am]

BILLING CODE 4910–13–U

---

14 CFR Part 71

[Airspace Docket No. 95–ASO–3]

Proposed Establishment of Class E Airspace; Blakely, GA

AGENCY: Federal Aviation Administration (FAA), DOT.

ACTION: Notice of proposed rulemaking.

SUMMARY: This notice proposes to establish Class E Airspace at Blakely, GA. A GPS RWY 23 Standard Instrument Approach Procedure (SIAP) has been developed for Early County Airport. Controlled airspace extending upward from 700 feet above the surface (AGL) is needed to accommodate this SIAP and for instrument flight rules (IFR) operations at the airport. If approved, the operating status of the airport will change from VFR to include IFR operations concurrent with publication of the SIAP.

DATES: Comments must be received on or before March 13, 1995.

EFFECTIVE DATE: Send comments on the proposal in triplicate to: Federal Aviation Administration, Docket No. 95–ASO–3, Manager, System Management Branch, ASO–530, P.O. Box 20636, Atlanta, Georgia 30320.

The official docket may be examined in the Office of the Assistant Chief Counsel for Southern Region, Room 550, 1701 Columbia Avenue, College Park, Georgia 30337, telephone (404) 305–5586.

FOR FURTHER INFORMATION CONTACT: Michael J. Powderly, System Management Branch, Air Traffic Division, Federal Aviation Administration, P.O. Box 20636, Atlanta, Georgia 30320; telephone (404) 305–5570.

SUPPLEMENTARY INFORMATION:

Comments Invited

Interested parties are invited to participate in this proposed rulemaking by submitting such written data, views or arguments as they may desire. Comments that provide the factual basis supporting the views and suggestions presented are particularly helpful in developing reasoned regulatory decisions on the proposal. Comments are specifically invited on the overall regulatory, aeronautical, economic, environmental, and energy-related aspects of the proposal. Communications should identify the airspace docket and be submitted in triplicate to the address listed above. Commenters wishing the FAA to acknowledge receipt of their comments on this notice must submit with those comments a self-addressed, stamped postcard on which the following statement is made: ''Comments to Airspace Docket No. 95–ASO–3.'' The postcard will be date/time stamped and returned to the commenter. All communications received before the specified closing date for comments will be considered before taking action on the proposed rule. The proposal contained in this notice may be changed in the light of comments received. All comments submitted will be available for examination in the Office of the Assistant Chief Counsel for Southern Region, Room 550, 1701 Columbia Avenue, College Park, Georgia 30337, both before and after the closing date for comments. A report summarizing each substantive public contact with FAA personnel concerned with this rulemaking will be filed in the docket.

Availability of NPRM'S

Any person may obtain a copy of this Notice of Proposed Rulemaking (NPRM) by submitting a request to the Federal Aviation Administration, Manager, System Management Branch, ASO–530, Air Traffic Division, P.O. Box 20636, Atlanta, Georgia 30320. Communications must identify the notice number of this NPRM. Persons interested in being placed on a mailing list for future NPRM's should also request a copy of Advisory Circular No. 11–2A, which describes the application procedure.

The Proposal

The FAA is considering an amendment to part 71 of the Federal Aviation Regulations (14 CFR part 71) to establish Class E airspace extending upward from 700 feet AGL at Blakely, GA, to accommodate a GPS RWY 23 SIAP and for IFR operations at the Early County Airport. If approved, the operating status of the airport would change from VFR to include IFR operations concurrent with publication of the SIAP. Designations for Class E airspace extending upward from 700 feet or more above the surface are published in Paragraph 6005 of FAA Order 7400.9B dated July 18, 1994 and effective September 16, 1994, which is incorporated by reference in CFR 71.1. The Class E airspace designation listed in this document would be published subsequently in the Order.

The FAA has determined that this proposed regulation only involves an established body of technical regulations for which frequent and routine amendments are necessary to keep them operationally current. It, therefore, (1) Is not a ''significant regulatory action'' under Executive Order 12866; (2) is not a ''significant rule'' under DOT Regulatory Policies and Procedures (44 FR 11034; February 26, 1979); and (3) does not warrant preparation of a regulatory evaluation as the anticipated impact is so minimal. Since this is a routine matter that will only affect air traffic procedures and air navigation, it is certified that this rule, when promulgated, will not have a significant economic impact on a substantial number of small entities under the criteria of the Regulatory Flexibility Act.

List of Subjects in 14 CFR Part 71

Airspace, Incorporation by reference, Navigation (Air).

The Proposed Amendment

In consideration of the foregoing, the Federal Aviation Administration proposes to amend 14 CFR part 71 as follows:

PART 71—[AMENDED]

1. The authority citation for 14 CFR part 71 continues to read as follows:

Authority: 49 U.S.C. app. 1348(a), 1354(a), 1510; E.O. 10854, 24 FR 9565, 3 CFR, 1959–1963 Comp., p. 389; 49 U.S.C. 106(g); 14 CFR 11.69.

§ 71.1 [Amended]

2. The incorporation by reference in 14 CFR 71.1 of the Federal Aviation Administration Order 7400.9B, Airspace Designations and Reporting Points, dated July 18, 1994 and effective September 16, 1994, is amended as follows:

Para. 6005 Class E airspace areas extending upward from 700 feet above the surface of the earth.

* * * * *

ASO GA E5 Blakely, GA [New]

Early County Airport, GA

(Lat. 31°23′46″ N, long. 84°53′33″ W)

That airspace extending upward from 700 feet above the surface within a 6.5-mile radius of Early County Airport.

* * * * *

Issued in College Park, Georgia, on January 20, 1995.

Michael J. Powderly,

Acting Manager, Air Traffic Division Southern Region.

[FR Doc. 95–2567 Filed 2–1–95; 8:45 am]

BILLING CODE 4910–13–M

14 CFR Part 71

[Airspace Docket No. 94-ASW-14]

Proposed Alteration of VOR Federal Airways; LA

AGENCY: Federal Aviation Administration (FAA), DOT.

ACTION: Notice of proposed rulemaking.

SUMMARY: This proposed rule would realign nine Federal airways located in Louisiana. The New Orleans Very High Frequency Omnidirectional Range/Tactical Air Navigation (VORTAC) will be decommissioned because the platform on which it is located is deteriorating. As a result, the Reserve, LA, Very High Frequency Omnidirectional Range/Distance Measuring Equipment (VOR/DME) and the Harvey, LA, VORTAC will be upgraded to high class navigational aids and the airways would be realigned to use the Reserve, LA, VOR/DME or the Harvey, LA, VORTAC. This action would enhance air traffic procedures and accommodate concerns of airspace users.

DATES: Comments must be received on or before March 22, 1995.

ADDRESSES: Send comments on the proposal in triplicate to:

Manager, Air Traffic Division, ASW-500

Docket No. 94-ASW-14,
Federal Aviation Administration,
4400 Blue Mound Road,
Fort Worth, TX 76193-0500.

The official docket may be examined in the Rules Docket, Office of the Chief Counsel, Room 916, 800 Independence Avenue, SW., Washington, DC, weekdays, except Federal holidays, between 8:30 a.m. and 5:00 p.m.

An informal docket may also be examined during normal business hours at the office of the Regional Air Traffic Division.

FOR FURTHER INFORMATION CONTACT: William C. Nelson, Airspace and Obstruction Evaluation Branch (ATP-240), Airspace-Rules and Aeronautical Information Division, Air Traffic Rules and Procedures Service, Federal Aviation Administration, 800 Independence Avenue, SW., Washington, DC 20591; telephone: (202) 267-9295.

SUPPLEMENTARY INFORMATION:

Comments Invited

Interested parties are invited to participate in this proposed rulemaking by submitting such written data, views, or arguments as they may desire. Comments that provide the factual basis supporting the views and suggestions presented are particularly helpful in developing reasoned regulatory decisions on the proposal. Comments are specifically invited on the overall regulatory, aeronautical, economic, environmental, and energy-related aspects of the proposal. Communications should identify the airspace docket number and be submitted in triplicate to the address listed above. Commenters wishing the FAA to acknowledge receipt of their comments on this notice must submit with those comments a self-addressed, stamped postcard on which the following statement is made: ''Comments to Airspace Docket No. 94-ASW-14.'' The postcard will be date/time stamped and returned to the commenter. All communications received on or before the specified closing date for comments will be considered before taking action on the proposed rule. The proposal contained in this notice may be changed in light of comments received. All comments submitted will be available for examination in the Rules Docket both before and after the closing date for comments. A report summarizing each substantive public contact with FAA personnel concerned with this rulemaking will be filed in the docket.

Availability of NPRM's

Any person may obtain a copy of this Notice of Proposed Rulemaking (NPRM) by submitting a request to the Federal Aviation Administration, Office of Public Affairs, Attention: Public Inquiry Center, APA-220, 800 Independence Avenue, SW., Washington, DC 20591, or by calling (202) 267-3485. Communications must identify the notice number of this NPRM. Persons interested in being placed on a mailing list for future NPRM's should also request a copy of Advisory Circular No. 11-2A, which describes the application procedure.

The Proposal

The FAA is considering an amendment to part 71 of the Federal Aviation Regulations (14 CFR part 71) to realign nine Federal airways located in Louisiana. The New Orleans, LA, VORTAC will be decommissioned because the platform on which it is located is deteriorating. As a result, the Reserve, LA, VOR/DME and the Harvey, LA, VORTAC will be upgraded to high class navigational aids and the airways would be realigned to use the Reserve, LA, VOR/DME or the Harvey, LA, VORTAC. This action would enhance air traffic procedures and accommodate concerns of airspace users. Domestic

VOR Federal airways are published in paragraph 6010(a) of FAA Order 7400.9B dated July 18, 1994, and effective September 16, 1994, which is incorporated by reference in 14 CFR 71.1. The airways listed in this document would be published subsequently in the Order.

The FAA has determined that this proposed regulation only involves an established body of technical regulations for which frequent and routine amendments are necessary to keep them operationally current. It, therefore - (1) is not a ''significant regulatory action'' under Executive Order 12866; (2) is not a ''significant rule'' under DOT Regulatory Policies and Procedures (44 FR 11034; February 26, 1979); and (3) does not warrant preparation of a regulatory evaluation as the anticipated impact is so minimal. Since this is a routine matter that will only affect air traffic procedures and air navigation, it is certified that this rule, when promulgated, will not have a significant economic impact on a substantial number of small entities under the criteria of the Regulatory Flexibility Act.

List of Subjects in 14 CFR Part 71

Airspace, Incorporation by reference, Navigation (air).

The Proposed Amendment

In consideration of the foregoing, the Federal Aviation Administration proposes to amend 14 CFR part 71 as follows:

PART 71—[AMENDED]

1. The authority citation for part 71 continues to read as follows:

Authority: 49 U.S.C. app. 1348(a), 1354(a), 1510; E.O. 10854, 24 FR 9565, 3 CFR, 1959-1963 Comp., p. 389; 49 U.S.C. 106(g); 14 CFR 11.69.

§ 71.1 [Amended]

2. The incorporation by reference in 14 CFR 71.1 of the Federal Aviation Administration Order 7400.9B, Airspace Designations and Reporting Points, dated July 18, 1994, and effective September 16, 1994, is amended as follows:

Paragraph 6010(a)-Domestic VOR Federal Airways

* * * * *

V-9 [Revised]

From Leeville, LA; McComb, MS; Jackson, MS; Sidon, MS; Gilmore, AR; Malden, MO; Farmington, MO; St. Louis, MO; Capital, IL; Pontiac, IL; INT Pontiac 343° and Rockford, IL, 169° radials; Rockford; Janesville, WI; Madison, WI; Oshkosh, WI; Green Bay, WI; Iron Mountain, MI; to Houghton, MI.

* * * * *

V-20 [Revised]

From McAllen, TX, via INT McAllen 038° and Corpus Christi, TX, 178° radials; 10 miles 8 miles wide, 37 miles 7 miles wide (3 miles E and 4 miles W of centerline), Corpus Christi; INT Corpus Christi 054° and Palacios, TX, 226° radials; Palacios; Hobby, TX; Beaumont, TX; Lake Charles, LA; Lafayette, LA; Reserve, LA; INT Reserve 083°T(081°M) and Gulfport, MS, 247° radials; Gulfport; Semmes, AL; INT Semmes 048° and Monroeville, AL, 231° radials; Monroeville; Montgomery, AL; Tuskegee, AL; Columbus, GA; INT Columbus 068° and Athens, GA, 195° radials; Athens; Electric City, SC; Sugarloaf Mountain, NC; Barretts Mountain, NC; South Boston, VA; Richmond, VA; INT Richmond 039° and Brooke, VA, 132° radials; INT Patuxent, MD, 228° and Nottingham, MD, 174° radials; to Nottingham. The airspace on the main airway above 14,000 feet MSL from McAllen to 49 miles northeast and the airspace within Mexico is excluded. The airspace within R-4007A and R-4007B is excluded.

* * * * *

V-114 [Revised]

From Amarillo, TX, via Childress, TX; Wichita Falls, TX; INT Wichita Falls 117° and Blue Ridge, TX, 285° radials; Blue Ridge; Quitman, TX; Gregg County, TX; Alexandria, LA; INT Baton Rouge, LA, 307° and Lafayette, LA, 042° radials; 7 miles wide (3 miles north and 4 miles south of centerline); Baton Rouge; INT Baton Rouge 115°T(109°M) and Reserve, LA, 323°T(321°M) radials; Reserve; INT Reserve 083°T(081°M) and Gulfport, MS, 247° radials; Gulfport; INT Gulfport 344° and Eaton, MS, 171° radials; to Eaton, excluding the portion within R-3801B and R-3801C.

* * * * *

V-240 [Revised]

From Harvey, LA, via Harvey 065°T(063°M) and Semmes, AL, 224° radials; to Semmes.

* * * * *

V-455 [Revised]

From Reserve, LA, via Picayune, MS; Eaton, MS; to Meridian, MS.

* * * * *

V-543 [Revised]

From Leeville, LA, via INT Leeville 356°T(354°M) and Eaton, MS, 221° radials; Eaton; INT Eaton 010° and Meridian, MS, 221° radials; Meridian.

* * * * *

V-552 [Revised]

From Beaumont, TX, via INT Beaumont 056° and Lake Charles, LA, 272° radials; Lake Charles; INT Lake Charles 064° and Lafayette, LA, 281° radials; Lafayette; Tibby, LA; Harvey, LA; Picayune, MS; Semmes, AL; INT Semmes 063° and Monroeville, AL, 216° radials; to Monroeville.

* * * * *

V-555 [Revised]

From Picayune, MS, via McComb, MS; INT McComb 019° and Jackson, MS, 169° radials; Jackson; INT Jackson 010° and Sidon, MS, 159° radials; to Sidon.

* * * * *

V-566 [Revised]

From Gregg County, TX, via Shreveport, LA; INT Shreveport 176° and Alexandria, LA, 302° radials; Alexandria; INT Alexandria 109° and Reserve, LA, 323°T(321°M) radials; to Reserve; excluding the portion within R-3801B and R-3801C.

* * * * *

Issued in Washington, DC, on January 26, 1995

Nancy B. Kalinowski,

Acting Manager, Airspace-Rules and Aeronautical Information Division.

[FR Doc. 95–2568 Filed 2–1–95; 8:45am]

BILLING CODE 4910–13–F

FEDERAL TRADE COMMISSION

16 CFR Chapter I

Notice of Intent to Request Public Comments on Rules and Guides

AGENCY: Federal Trade Commission.

ACTION: Notice of intent to request public comments.

SUMMARY: As part of its systematic review of all current Commission regulations and guides, the Federal Trade Commission (''Commission'') gives notice that it intends to request public comments on the rules and guides listed below during 1995. The Commission will request comments on, among other things, the economic impact of, and the continuing need for, the rules or guides, possible conflict between the rules or guides and state, local or other federal laws, and the effect on the rules or guides of any technological, economic, or other industry changes. No Commission determination on the need for or the substance of a rule, regulation, guide or interpretation or any other procedural option should be inferred from the intent to publish requests for comments. In certain instances the reviews also will address other specific matters or issues, such as reviews mandated by the Regulatory Flexibility Act, 5 U.S.C. 601 *et seq.*, and issues concerning disclosures of measurements in metric terms. Omnibus Trade and Competitiveness Act, 15 U.S.C. 205, Executive Order 12770 (''Metric Usage in Federal Government Program''), 56 FR 35801 (July 25, 1991).

FOR FURTHER INFORMATION CONTACT: Further details may be obtained from the Commission's contact person listed for each particular regulation.

SUPPLEMENTARY INFORMATION: The Commission is publishing a list of rules and guides that it intends to initiate reviews of and solicit public comments on during 1995. The Commission intends to publish notices requesting comments about the following items in 1995:

Agency Contact for the following items: Susan Arthur, Federal Trade Commission, Dallas Regional Office, 100 N. Central Expressway, Suite 500, Dallas, TX 75201, 214/767–5517.

(1) Guides for the Luggage and Related Products Industry (16 CFR Part 24).

(2) Guides for Shoe Content Labeling and Advertising (16 CFR Part 231).

(3) Guides for the Ladies' Handbag Industry (16 CFR Part 247).

Agency Contacts for the following item: Douglas Goglia, Donald G. D'Amato, and Eugene Lipkowitz, New York Regional Office, Federal Trade Commission, 150 William Street, Suite 1300, New York, New York 10038, 212/264–1229, 212264–1223, and 212/264–1230, respectively.

(4) Guides for the Beauty and Barber Equipment and Supplies Industry (16 CFR Part 248).

Agency Contact for the following item: Michelle Rusk, Federal Trade Commission, Bureau of Consumer Protection, Division of Advertising Practices, Room S4002, Sixth and Pennsylvania Ave., NW, Washington, DC 20580, 202/326–3148.

(5) Guides for the Use of Environmental Marketing Claims (16 CFR Part 260) (Green Guides).

Agency Contact for the following item: Russell Deitch, Federal Trade Commission; Los Angeles Regional Office, Suite 13209, 11000 Wilshire Blvd., Los Angeles, CA 90024, 310/235–7890.

(6) Trade Regulation Rule Concerning Misbranding and Deception as to Leather Content of Waist Belts (16 CFR Part 405) (Leather Belt Rule).

Agency Contact for the following items: Kent C. Howerton, Federal Trade Commission, Bureau of Consumer Protection, Division of Enforcement, Room S4631, Sixth and Pennsylvania Ave., NW, Washington, DC 20580, 202/326–3013.

(7) Trade Regulation Rule Concerning the Incandescent Lamp Industry (Light Bulb Rule) (16 CFR Part 409).

(8) Trade Regulation Rule Concerning the Labeling and Advertising of Home Insulation (''R-value Rule'') (16 CFR Part 460).

Agency Contact for the following item: Steven Toporoff, Federal Trade Commission, Bureau of Consumer Protection, Division of Marketing Practices, Room H238, Sixth and Pennsylvania Ave., NW, Washington, DC 20580, 202/326–3135.

(9) Trade Regulation Rule Regarding Disclosure Requirements and Prohibitions Concerning Franchising and Business Opportunity Ventures (''Franchise Rule'') (16 CFR Part 436).

Authority: 15 U.S.C. 41–58.

By direction of the Commission.

Donald S. Clark,

Secretary.

[FR Doc. 95–2620 Filed 2–1–95; 8:45 am]

BILLING CODE 6750–01–M

DEPARTMENT OF THE TREASURY

Customs Service

19 CFR Part 134

RIN 1515–AB61

Advance Notice of Proposed Customs Regulations Amendments Concerning the Country of Origin Marking Requirements for Frozen Produce Packages

AGENCY: Customs Service, Department of Treasury.

ACTION: Advance notice of proposed rulemaking; solicitation of comments.

SUMMARY: This document provides advance notice of a proposal to amend the Customs Regulations to: Prescribe rules regarding a conspicuous place for the marking of country of origin on packages of frozen produce; and establish rules concerning the appropriate type size and style to be employed in marking frozen produce packages. The purpose of this document is to help determine whether a rulemaking is needed to ensure a uniform standard for conspicuous and legible country of origin marking for packages of frozen produce, and, if needed, the contents of that rulemaking.

DATES: Comments must be received on or before March 20, 1995.

ADDRESSES: Written comments (preferably in triplicate) may be addressed to the Regulations Branch, Office of Regulations and Rulings, U.S. Customs Service, Franklin Court, 1301 Constitution Ave., N.W., Washington, D.C. 20229. Comments submitted may be inspected at the Regulations Branch, Office of Regulations and Rulings, U.S. Customs Service, Franklin Court, 1099 14th Street, N.W., Suite 4000, Washington, D.C.

FOR FURTHER INFORMATION CONTACT: Wende Schuster, Special Classification and Marking Branch, Office of Regulations and Rulings (202–482–6980).

SUPPLEMENTARY INFORMATION:

Background

Section 304 of the Tariff Act of 1930, as amended (19 U.S.C. 1304), provides that, unless excepted, every article of foreign origin (or its container) imported into the U.S. shall be marked in a conspicuous place as legibly, indelibly, and permanently as the nature of the article (or its container) will permit, in such a manner as to indicate to the ultimate purchaser in the U.S. the English name of the country of origin of the article. Failure to mark an article in accordance with the requirements of 19 U.S.C. 1304 shall result in the levy of a duty of ten percent *ad valorem*. Part 134, Customs Regulations (19 CFR Part 134), implements the country of origin marking requirements and exceptions of 19 U.S.C. 1304.

Customs Ruling and Court Action

On May 9, 1988, Norcal Crosetti Foods, Inc. and other California packers of domestically-grown produce requested a ruling from Customs concerning what constituted conspicuous country of origin marking for packages of frozen produce, *i.e.*, whether the marking should be located on the front or some other panel of the package and in what type size and style it should appear. Specifically, Customs was asked to determine whether packaged frozen produce was considered conspicuously marked if the marking did not appear on the front panel of the package in prominent lettering. Sample packages which were not marked on their front panels were submitted with the ruling request. On November 21, 1988, Customs issued a ruling (Headquarters Ruling Letter (HRL) 731830), stating that the country of origin markings on all of the samples submitted were in compliance with the country of origin marking requirements, as the packages were marked by names and words which appeared on the back panel of the packaging in close proximity to nutritional and other information.

The packers appealed Customs determination in HRL 731830 to the Court of International Trade (CIT). *Norcal/Crosetti Foods, Inc.* v. *U.S. Customs Service*, 15 CIT 60, 758 F.Supp. 729 (1991) (*Norcal I*). In *Norcal I*, the court ruled that frozen produce is not marked in a conspicuous place unless it is marked on the front panel of the package. The court remanded the matter to Customs with directions to issue a new ruling. Pursuant to the court's order in *Norcal I*, Customs issued Treasury Decision (T.D.) 91–48 (56 FR 24115, May 28, 1991), which required the country of origin marking for frozen produce to be placed on the front panel of the package.

Arguing that the CIT did not have jurisdiction to decide the case, the government appealed the CIT's decision to the Court of Appeals for the Federal

Circuit. *Norcal/Crosetti Foods, Inc.* v. *U.S.*, 963 F.2d 356 (Fed.Cir. 1992) (*Norcal II*). In *Norcal II*, the court ruled on procedural grounds to reverse the judgment of the CIT and remand the case with instructions to dismiss the complaint for lack of jurisdiction. The appellate court reasoned that since the packers' had not exhausted their administrative remedies, their claims were not properly before the CIT. The court further indicated that a proper course would have been for the packers to initiate a proceeding before Customs under section 516 of the Tariff Act of 1930, as amended (19 U.S.C. 1516).

The 516 Petition and Agency Action (1993)

A 516 petition (the *Norcal* petition) was initiated by letters dated January 13 and January 29, 1993, and filed with Customs under 19 U.S.C. 1516 and Part 175, Customs Regulations (19 CFR Part 175). The petitioners were Norcal Crosetti Foods, Inc. and Patterson Frozen Foods, Inc., California packers of produce grown domestically. The International Brotherhood of Teamsters, on behalf of its Local 912, submitted a letter dated February 24, 1993, supporting the Norcal and Patterson petition. The *Norcal* petition asked Customs to reconsider its position in HRL 731830, and to adopt the findings of the CIT in *Norcal I.*

The petitioners contended that imported frozen produce is not marked in a conspicuous place in accordance with the requirements of 19 U.S.C. 1304. The petitioners argued that under a correct application of 19 U.S.C. 1304, the indication of country of origin must appear on the front panel of a package to be considered as marked in a conspicuous place. These domestic producers argued further that Customs standards for the size and prominence of such country of origin markings were not in conformity with 19 U.S.C. 1304.

Customs published a notice in the **Federal Register** on September 9, 1993 (58 FR 47413), advising the public of the petitioners' contentions and soliciting public comments on the issues raised in the petition. Also in this notice, Customs effectively suspended the effective date of T.D. 91–48 by reinstating HRL 731830. Seventy-one comments were submitted in response to the petitions.

In T.D. 94–5 (58 FR 68743, December 29, 1993), Customs issued a final interpretive ruling based on the comments which were received in response to the September 9 **Federal Register** notice. T.D. 94–5 stated that back panel marking was insufficient and front panel country of origin marking was prescribed in a specified type size and style designed to match the net weight or net quantity of contents marking of the product under the Food Labeling Regulations (21 CFR 101.105). In T.D. 94–5, Customs modified T.D. 91–48 by requiring that conspicuous marking within the meaning of T.D. 91–48, shall be limited to marking which complies with the additional specifications for type size and style set forth in T.D. 94–5. The effective date initially established for the decision in T.D. 94–5 was May 8, 1994, in order to allow importers time to modify their packaging. On March 29, 1994, however, Customs issued two **Federal Register** documents: One (59 FR 14458) suspending the compliance date of May 8, 1994, for parties adversely affected by the country of origin marking requirements specified in T.D. 94–5, and the other (59 FR 14579) giving notice of its intention to adopt a new compliance date of January 1, 1995, and soliciting comments on both the proposed compliance date and on the specifications regarding type size and style.

In response to T.D. 94–5, however, an action was filed with the Court of International Trade on behalf of American Frozen Food Institute, Inc. and National Food Processors Association, which challenged Customs decision. In *American Frozen Food Institute, Inc., et al.* v. *The United States,* Slip Op. 94–97 (June 9, 1994), the CIT ruled that because Customs had chosen to promulgate front panel marking in combination with other requirements needing APA [Administrative Procedure Act, 5 U.S.C. 553] rulemaking procedures, the entirety of T.D. 94–5 could not stand. The court stated that it expected Customs to formulate a rational rule based on comments received in connection with this matter before publishing any proposed rule.

The court further concluded that, because the full rulemaking process had not yet been followed, it would not rule on whether T.D. 94–5 was acceptable substantively. Since the court declared T.D. 94–5, in its entirety, null and void, there is no decision on the January 1993 petition filed by Norcal Crosetti Foods, Inc. and Patterson Frozen Foods, Inc. The decision on the 516 petition will be held in abeyance. Publication of this document is without prejudice to an ultimate decision on the 516 petition.

Issues for Consideration in Determining Whether Customs Should Issue a Notice of Proposed Rulemaking With Regard to Specific Country of Origin Marking of Frozen Produce

The Customs Service is considering issuing a notice of proposed rulemaking to amend the Customs Regulations to prescribe rules regarding a conspicuous location for the country of origin marking on packages of frozen produce and to require that such marking meet certain type size and style specifications. Although relevant comments were received in response to the **Federal Register** notices pertaining to T.D. 94–5, there are several other issues on which we would like to receive additional public comments before deciding whether to propose rulemaking on this matter. In addition to general comments, interested parties are invited to comment on the following specific issues:

(1) Is there a need for Customs to initiate a proposed rulemaking regarding country of origin marking of frozen produce?

(2) Whether there are current abuses in the country of origin marking of imported packages of frozen produce. If so, whether such abuses require that Customs prescribe country of origin marking requirements by rules applicable to all packages of frozen produce, or whether the abuses should be handled on a case-by-case basis.

(3) For purposes of the marking statute and regulations, are there sound reasons of public policy for treating frozen produce differently from produce packaged in other ways (e.g., canned goods)?

(4) Whether the front panel of frozen produce is the only ''conspicuous place'' on the package for country of origin marking.

(5) Whether a specified location on another panel (*e.g.*, the back panel) where the country of origin marking is demarcated by, for example, a box, a header, bold print, margins, a contrasting background, or other graphic devices, would constitute a ''conspicuous place'' for purposes of the marking statute.

(6) Whether Customs should prescribe, by regulation, certain type size and style specifications for the country of origin marking of frozen produce. If so, whether the regulations should specify one type size for all packages of frozen produce, or different type sizes depending upon the size of the package. If one type size is prescribed for all packages of frozen produce, what type size should be recommended and why?

(7) Whether for purposes of country of origin marking, the term ''produce'' should be defined to include both fruits and vegetables.

(8) Where frozen produce packaging contains produce sourced from multiple countries, should this have any bearing on the placement of the country of origin marking?

(9) Whether the particular conditions of the frozen food section in a store impact on the likelihood that a consumer will notice label information regarding country of origin without this information being given special prominence. If so, whether there is any empirical evidence of such consumer behavior.

(10) Whether consumer behaviors and attitudes toward country of origin marking of frozen produce can be documented with studies or surveys. If so, how much time would be needed for a study or survey to be conducted and for the data to be analyzed?

(11) If Customs goes forward with a notice of proposed rulemaking, what should be a sufficient period of time for public comment?

(12) If Customs issues a notice of proposed rulemaking, should a public hearing be held in connection with such proposed rulemaking?

(13) If Customs proposes and adopts new country of origin marking regulations, what would be an appropriate time frame between the publication of the final rule and the effective date of such regulations?

(14) What other issues should be addressed in the proposed rulemaking in order to afford a full opportunity for public comment?

Comments

In order to assist Customs in determining whether to proceed with a notice of proposed rulemaking to prescribe rules regarding the country of origin marking for packages of frozen produce, and the appropriate type size and style specifications for such marking, this notice invites written comments on the issues raised in this document as well as any other issues in connection with this matter. Consideration will be given to any comments that are timely submitted to Customs. Comments submitted will be available for public inspection in accordance with the Freedom of Information Act (5 U.S.C. 552), section 1.4, Treasury Department Regulations (31 CFR 1.4), and section 103.11(b), Customs Regulations (19 CFR 103.11(b)), on regular business days between the hours of 9 a.m. and 4:30 p.m. at the Regulations Branch, Office of Regulations and Rulings, U.S. Customs Service, 1099 14th Street, N.W., Suite 4000, Washington, D.C.

William F. Riley,

Acting Commissioner of Customs.

Approved: January 27, 1995.

Ronald K. Noble,

Under Secretary of the Treasury.

[FR Doc. 95–2546 Filed 2–1–95; 8:45 am]

BILLING CODE 4820–02–P

DEPARTMENT OF AGRICULTURE

Forest Service

36 CFR Part 242

DEPARTMENT OF THE INTERIOR

Fish and Wildlife Service

50 CFR Part 100

Petition for Rulemaking to the Secretaries of the Interior and Agriculture Relating to the Federal Subsistence Management Program for Public Lands in Alaska; Notice of Availability and Request for Comments

AGENCY: Forest Service, USDA; Fish and Wildlife Service, Interior.

ACTION: Petition for rulemaking.

SUMMARY: The Secretary of the Interior and the Secretary of Agriculture (Secretaries) have received a petition submitted by the Northwest Arctic Regional Council and other Alaska Native groups requesting the Secretaries initiate rulemaking to (1) establish that they have authority to regulate hunting and fishing on non-public lands to protect the subsistence priority afforded on public lands by Title VIII of the Alaska National Interest Lands Conservation Act (ANILCA), and (2) determine that lands selected by, but not yet conveyed to, Native Corporations and the State of Alaska be treated as public lands subject to the ANILCA subsistence priority. Copies of this petition are available for review from the address listed below. To aid the Secretaries in reaching a decision on this petition, the Federal Subsistence Board is soliciting public comments on the issues presented.

DATES: Comments must be submitted on or before April 3, 1995.

ADDRESSES: Comments should be submitted to and copies of the petition may be obtained by contacting Richard S. Pospahala, U.S. Fish and Wildlife Service, 1011 E. Tudor Road, Anchorage, Alaska, 99503.

FOR FURTHER INFORMATION CONTACT: Copies of the petition may be obtained by contacting Richard S. Pospahala, telephone (907) 786–3447. For questions specific to National Forest System lands, contact Norman R. Howse, telephone (907) 586–8890.

SUPPLEMENTARY INFORMATION:

Background

Title VIII of the Alaska National Interest Lands Conservation Act (16 U.S.C. 3111–3126) requires the Secretaries to implement a joint program to grant a preference to subsistence uses of fish and wildlife resources on public lands, unless the State of Alaska enacts and implements laws of general applicability that are consistent with, and provide for, the subsistence definition, preference, and participation specified in Sections 803, 804, and 805 of ANILCA. The State implemented a program that the Department of the Interior found to be consistent with ANILCA. However, in December 1989, the Alaska Supreme Court ruled in *McDowell* v. *State of Alaska,* 785 P.2d 1 (Alaska 1989), that the rural preference in the State subsistence statute violated the Alaska Constitution. The ruling in *McDowell* required the State to delete the rural preference from its subsistence statute, which put the State out of compliance with ANILCA. The Court stayed the effect of the decision until July 1, 1990.

The Department of the Interior and the Department of Agriculture assumed responsibility for implementation of the subsistence preference in Title VIII of ANILCA on public lands on July 1, 1990, pursuant to the Temporary Subsistence Management Regulations for Public Lands in Alaska that were published in the **Federal Register** on June 29, 1990 (55 FR 27114–27170). The Departments published Permanent Subsistence Management Regulations for Public Lands in Alaska on May 29, 1992 (57 FR 22940–22964).

The subsistence preference established in Section 804 of ANILCA accords priority to the taking of fish and wildlife for nonwasteful subsistence uses on ''public lands'' over the taking of fish and wildlife on public lands for other purposes. ''Public lands'' are defined in Section 102 of ANILCA to mean lands, waters, and interests therein that are situated in Alaska and to which the United States holds title, except for:

(1) Land selections of the State of Alaska that have been tentatively approved or validly selected under the Alaska Statehood Act and lands that have been confirmed to, validly selected by, or granted to the Territory of Alaska or the State under any other provision of Federal Law;

(2) Land selections of a Native Corporation made under the Alaska Native Claims Settlement Act that have not been conveyed to a Native Corporation, unless any such selection is determined to be invalid or is relinquished; and

(3) Lands referred to in Section 19(b) of the Alaska Native Claims Settlement Act.

In promulgating the Federal subsistence regulations, the Secretaries took the position that (1) most navigable waters, and (2) lands selected by, but not conveyed to, the State and Native Corporations, are not subject to the Section 804 subsistence preference. This position was based upon a finding that these waters and lands are not covered by the definition of ''public lands.'' See, for example, 55 FR 27115 (June 29, 1990).

The petition submitted to the Secretaries by the Northwest Arctic Regional Council (NARC), Stevens Village Council, Kawerik, Inc., Copper River Native Association, Alaska Federation of Natives, Alaska Inter-tribal Council, RurAL CAP, and the Dinyee Corporation seeks rulemaking to reverse and/or clarify this position. The petition requests that:

(1) An interpretive rule be promulgated that states that the Federal government has the authority to regulate hunting and fishing on non-public lands; and

(2) An interpretive rule be promulgated that places selected but not conveyed lands within the purview of the subsistence priority.

The petitioners rely for their first assertion upon law established in the contiguous 48 states that establishes Federal authority to regulate activities on non-Federal lands to protect activities on Federal lands. The petitioners cite case law that finds two sources for this authority: The Property Clause of the Constitution and Federal law preemption of state law. Petitioners find support for their second point in the legislative history of and management provisions in ANILCA, and place particular reliance on section 906(o)(2) of ANILCA. The petitioners also examine the definitions of ''public lands'' and ''federal lands'' in light of the land management provisions.

The Federal Subsistence Board requests public review and comment in order to enable the Secretaries better to assess the impacts and concerns of the petition and to assist them in reaching a decision on its disposition.

Drafting Information

This notice was drafted under the guidance of Richard S. Pospahala, U.S. Fish and Wildlife Service, Alaska Regional Office, Office of Subsistence Management, Anchorage, Alaska. The primary author was William Knauer of the same office.

Dated: January 20, 1995.

David B. Allen,

Acting Chair, Federal Subsistence Board.

[FR Doc. 95–2518 Filed 2–1–95; 8:45 am]

BILLING CODE 3410–11–P; 4310–55–P

ENVIRONMENTAL PROTECTION AGENCY

40 CFR Part 52

[CA 95–8–6858a; FRL–5148–5]

Approval and Promulgation of Implementation Plans; California State Implementation Plan Revision, Bay Area Air Quality Management District, Placer County Air Pollution Control District, San Diego County Air Pollution Control District, and San Joaquin Valley Unified Air Pollution Control District

AGENCY: Environmental Protection Agency (EPA).

ACTION: Notice of proposed rulemaking (NPRM).

SUMMARY: EPA is proposing to approve revisions to the California State Implementation Plan (SIP) which concern the control of volatile organic compound (VOC) emissions from marine vessel coating; graphic arts operations; paper, fabric and film coating; and storage of organic liquids.

The intended effect of proposing approval of these rules is to regulate emissions of VOCs in accordance with the requirements of the Clean Air Act, as amended in 1990 (CAA or the Act). EPA's final action on this notice of proposed rulemaking (NPRM) will incorporate these rules into the federally approved SIP. EPA has evaluated each of these rules and is proposing to approve them under provisions of the CAA regarding EPA action on SIP submittals, SIPs for national primary and secondary ambient air quality standards and plan requirements for nonattainment areas.

DATES: Comments must be received on or before March 6, 1995.

ADDRESSES: Comments may be mailed to: Daniel A. Meer, Rulemaking Section [A–5–3], Air and Toxics Division, U.S. Environmental Protection Agency, Region IX, 75 Hawthorne Street, San Francisco, CA 94105–3901.

Copies of the rule revisions and EPA's evaluation report of each rule are available for public inspection at EPA's Region 9 office during normal business hours. Copies of the submitted rule revisions are also available for inspection at the following locations:

California Air Resources Board, Stationary Source Division, Rule Evaluation Section, 2020 ''L'' Street, Sacramento, CA 92123–1095.

Bay Area Air Quality Management District, 939 Ellis Street, San Francisco, CA 94109.

Placer County Air Pollution Control District, 11464 B. Avenue, Auburn, CA 95603.

San Diego County Air Pollution Control District, 9150 Chesapeake Drive, San Diego, CA 92123–1096.

San Joaquin Valley Unified Air Pollution Control District, 1999 Tuolumne Street, Suite 200, Fresno, CA 93721.

FOR FURTHER INFORMATION CONTACT: Erik H. Beck, Rulemaking Section [A–5–3], Air and Toxics Division, U.S. Environmental Protection Agency, Region IX, 75 Hawthorne Street, San Francisco, CA 94105–3901. Internet Email: beck.erik@epamail.epa.gov. Telephone: (415) 744–1190.

SUPPLEMENTARY INFORMATION:

Applicability

The rules being proposed for approval into the California SIP include: Bay Area Air Quality Management District (BAAQMD) Rule 8–43, ''Surface Coating of Marine Vessels''; Placer County Air Pollution Control District (PCAPCD) Rule 212, ''Storage of Organic Liquids''; San Diego County Air Pollution Control District (SDCAPCD) Rule 67.16, ''Graphic Arts Operations''; SDCAPCD Rule 67.18, ''Marine Coating Operations''; and San Joaquin Valley Unified Air Pollution Control District (SJVUAPCD) Rule 4607, ''Graphic Arts''. These rules were submitted by the California Air Resource Board to EPA on September 28, 1994, December 19, 1994, October 19, 1994, December 22, 1994, and July 13, 1994 respectively.

Background

On March 3, 1978, EPA promulgated a list of ozone nonattainment areas under the provisions of the Clean Air Act, as amended in 1977 (1977 CAA or pre-amended act), that included the San Francisco Bay Area, Sacramento Metro Area, San Diego Area, and the San Joaquin Valley Air Basin. The San Joaquin Valley Air Basin is comprised of the following eight air pollution control districts (APCD): Fresno County APCD, Kern County APCD,[1] Kings County

[1] At that time, Kern County included portions of two air basins: the San Joaquin Valley Air Basin and

Continued

APCD, Madera County APCD, Merced County APCD, San Joaquin County APCD, Stanislaus County APCD, and Tulare County APCD. 43 FR 8964, 40 CFR 81.305. Because some of these areas were unable to meet the statutory attainment date of December 31, 1982, California requested under section 172(a)(2), and EPA approved, an extension of the attainment date to December 31, 1987.[2] 40 CFR 52.222. On May 26, 1988, EPA notified the Governor of California, pursuant to section 110(a)(2)(H) of the pre-amended Act, that the above districts' portions of the California SIP were inadequate to attain and maintain the ozone standard and requested that deficiencies in the existing SIP be corrected (EPA's SIP-Call). On November 15, 1990, the Clean Air Act Amendments of 1990 were enacted. Pub. L. 101–549, 104 Stat. 2399, codified at 42 U.S.C. 7401–7671q. In amended section 182(a)(2)(A) of the CAA, Congress statutorily adopted the requirement that nonattainment areas fix their deficient reasonably available control technology (RACT) rules for ozone and established a deadline of May 15, 1991 for states to submit corrections of those deficiencies.

On March 20, 1991, the San Joaquin Valley Unified Air Pollution Control District (SJVUAPCD) was formed. The SJVUAPCD has authority over the San Joaquin Valley Air Basin which includes the following counties, except for the Southeast Desert Air Basin portion of Kern County: Fresno County APCD, Kern County APCD,[3] Kings County APCD, Madera County APCD, Merced County APCD, San Joaquin County APCD, Stanislaus County APCD, and Tulare County APCD. Thus, Kern County Air Pollution Control District (KCAPCD) still exists, but only has authority over the Southeast Desert Air Basin portion of Kern County.

Section 182(a)(2)(A) applies to areas designated as nonattainment prior to enactment of the amendments and classified as marginal or above as of the date of enactment. It requires such areas to adopt and correct RACT rules pursuant to pre-amended section 172(b) as interpreted in pre-amendment guidance.[4] EPA's SIP-Call used that guidance to indicate the necessary corrections for specific nonattainment areas. BAAQMD is moderate, PCAPCD is serious, SDCAPCD is severe, and the APCDs found in the San Joaquin Valley Air Basin (now collectively known as the SJVUAPCD) are serious [5]; therefore, these areas were subject to the RACT fix-up requirement and the May 15, 1991 deadline. KCAPCD was subject to EPA's SIP-Call, but was not subject to the RACT fix-up requirement and the May 15, 1991 deadline.[6]

Because EPA had previously given earlier submittals of these rules limited approval/limited disapproval, 18 month sanction clocks were started. These sanction clocks began on August 11, 1993, and September 29, 1993. For more information on these sanction clocks, please refer to the Interim final rule being published elsewhere in today's **Federal Register**.

The State of California submitted many revised RACT rules for incorporation into its SIP on July 13, 1994, September 28, 1994, October 19, 1994, December 19, 1994, and December 22, 1994, including the rules being acted on in this document. This document addresses EPA's proposed action for BAAQMD Rule 8–43, ''Surface Coating of Marine Vessels;'' PCAPCD Rule 212, ''Storage of Organic Liquids;'' SDCAPCD Rule 67.16, ''Graphic Arts Operations''; SDCAPCD Rule 67.18, ''Marine Coating Operations''; and SJVUAPCD Rule 4607, ''Graphic Arts''. BAAQMD adopted Rule 8–43 on June 1, 1994. PCAPCD adopted Rule 212 on November 3, 1994. SDCAPCD adopted Rule 67.16 on September 20, 1994, and Rule 67.18 on December 13, 1994. SJVUAPCD adopted Rule 4607 on May 19, 1994. These submitted rules were found to be complete on July 22, 1994 (SJVUAPCD Rule 4607); November 22, 1994 (BAAQMD Rule 8–43); December 1, 1994 (SDCAPCD Rule 67.16); December 23, 1994 (PCAPCD Rule 212); and January 3, 1995 (SDCAPCD Rule 67.18). These findings of completeness are pursuant to EPA's completeness criteria that are set forth in 40 CFR part 51 appendix V.[7] These revised SIP submittals are being proposed for approval into the SIP.

These rules control VOC emissions from graphic arts operations, the coating of paper, fabric and film products, the coating of marine vessels, and the storage of organic liquids. VOCs contribute to the production of ground-level ozone and smog. The rules were adopted as part of each district's efforts to achieve the National Ambient Air Quality Standard (NAAQS) for ozone and in response to EPA's SIP-Call and the section 182(a)(2)(A) CAA requirement. The following is EPA's evaluation and proposed action for these rules.

EPA Evaluation and Proposed Action

In determining the approvability of a VOC rule, EPA must evaluate the rule for consistency with the requirements of the CAA and EPA regulations, as found in section 110 and Part D of the CAA and 40 CFR part 51 (Requirements for Preparation, Adoption, and Submittal of Implementation Plans). The EPA interpretation of these requirements, which forms the basis for today's action, appears in the various EPA policy guidance documents listed in footnote 1. Among those provisions is the requirement that a VOC rule must, at a minimum, provide for the implementation of RACT for stationary sources of VOC emissions. This requirement was carried forth from the pre-amended Act.

For the purpose of assisting state and local agencies in developing RACT rules, EPA prepared a series of Control Technique Guideline (CTG) documents. The CTGs are based on the underlying requirements of the Act and specify the presumptive norms for what is RACT for specific source categories. Under the CAA, Congress ratified EPA's use of

the Southeast Desert Air Basin. The San Joaquin Valley Air Basin portion of Kern County was designated as nonattainment, and the Southeast Desert Air Basin portion of Kern County was designated as unclassified. See 40 CFR 81.305 (1991).

[2] This extension was not requested for the following counties: Kern, Kings, Madera, Merced and Tulare. Thus, the attainment date for these counties remained December 31, 1982.

[3] At that time, Kern County included portions of two air basins: the San Joaquin Valley Air Basin and the Southeast Desert Air Basin. The San Joaquin Valley Air Basin portion of Kern County was designated as nonattainment, and the Southeast Desert Air Basin portion of Kern County was designated as unclassified. See 40 CFR 81.305 (1991).

[4] Among other things, the pre-amendment guidance consists of those portions of the proposed post-1987 ozone and carbon monoxide policy that concern RACT, 52 FR 45044 (November 24, 1987); ''Issues Relating to VOC Regulation Cutpoints, Deficiencies, and Deviations, Clarification to Appendix D of November 24, 1987 **Federal Register** Notice'' (Blue Book) (notice of availability was published in the **Federal Register** on May 25, 1988); and the existing control technique guidelines (CTGs).

[5] The San Francisco Bay Area, Sacramento Metro Area, San Diego Area, and the San Joaquin Valley Air Basin retained their designations of nonattainment and were classified by operation of law pursuant to sections 107(d) and 181(a) upon the date of enactment of the CAA. See 55 FR 56694 (November 6, 1991).

[6] KCAPCD was not subject to the RACT fix-up requirement and the May 15, 1991 deadline because the Southeast Desert Air Basin portion of Kern County was not a pre-enactment nonattainment area, and thus, was not automatically designated nonattainment on the date of enactment of the Clean Air Act Amendments of 1990. (See § 107(d) and § 182(a)(2)(A) of the Clean Air Act Amendments of 1990.) However, the KCAPCD is still subject to the requirements of EPA's SIP-Call because the SIP-Call included all of Kern County. The substantive requirements of the SIP-Call are the same as those of the statutory RACT fix-up requirement.

[7] EPA adopted the completeness criteria on February 16, 1990 (55 FR 5830) and, pursuant to section 110(k)(1)(A) of the CAA, revised the criteria on August 26, 1991 (56 FR 42216).

these documents, as well as other Agency policy, for requiring States to ''fix-up'' their RACT rules. See section 182(a)(2)(A). The CTGs applicable to these rules are entitled:

- *Control of Volatile Organic Emissions from Petroleum Liquid Storage in External Floating Roof Tanks* (EPA–450/2–78–047);
- *Control of Volatile Organic Emissions from Existing Stationary Sources—Volume II: Surface Coating of Cans, Coils, Paper, Fabrics, Automobiles, and Light-Duty Trucks.* (EPA–450/2–77–008);
- *Control of Volatile Organic Emissions from Existing Stationary Sources—Volume VIII: Graphic Arts—Rotogravure and Flexography.* (EPA–450/2–78–033);

Further interpretations of EPA policy are found in the Blue Book, referred to in footnote 1, and in EPA's Alternative Control Technique (ACT) documents for offset lithography and marine coating. These documents are entitled *Alternative Control Techniques Document: Offset Lithographic Printing* (EPA 453/R–94–054) and *Alternative Control Techniques Document: Surface Coating Operations at Shipbuilding and Ship Repair Facilities* (EPA 453/R–94–932). In general, these guidance documents have been set forth to ensure that VOC rules are fully enforceable and strengthen or maintain the SIP. Also, the ACTs referenced provide technical guidance on the control of VOCs from their respective industries, similar to the guidance provided by the CTGs.

BAAQMD Rule 8–43, ''Surface Coating of Marine Vessels'' includes the following significant changes from the current SIP:

- Deleted ''Alternate Emission Control Plan'';
- Deleted ''Small Business Provision'';
- Added specific add-on control equipment efficiency standards;
- Revised references to test procedures;
- Simplified specialty coating limits table;
- Modified architectural coatings exemption;
- Added a definition of ''Key Operating System Parameter'';
- Revised coating records section;
- Created recordkeeping requirements for add-on controls;
- Modified the test method section. These modifications include:
- Removed ''Executive Officer's Discretion'';
- Added references to EPA test methods;
- Added a test method for acid content.

PCAPCD Rule 212, ''Storage of Organic Liquids'' includes the following significant changes from the current SIP:

- Added an applicability section;
- Added a definition of ''vapor pressure'';
- Revised the definition of volatile organic compounds consistent with 40 CFR 51.100 (except that Rule 212 also regulates ethane);
- Revised recordkeeping section to require sources subject to the requirements of Title V of the CAA retain their records for at least 5 years, and that other sources retain their records for at least 2 years;
- Revised the test method section by adding standard American Society for Testing and Materials (ASTM) and California Air Resources Board test methods.

SDCAPCD Rule 67.16, ''Graphic Arts Operations'' includes the following significant changes from the current SIP:

- Eliminated unapprovable test methods;
- Revised exemption language to clarify and to exempt some sources from some recordkeeping requirements;
- Revised compounds considered to be exempt from control by virtue of their lack of photochemical reactivity in forming ozone. These revisions match EPA requirements promulgated at 40 CFR 51.100;
- Revised the definition of Stationary Source to reference SDCAPCD Rule 20.1;
- Removed 1991 future effective dates for regulations regarding cleanup, since they are now in effect;
- Modified control device requirements to permit increased flexibility with the same overall capture and control efficiency;
- Deleted recordkeeping requirements regarding ozone depleters;
- Revised recordkeeping requirements for noncompliant coatings and for add-on control equipment;
- Modified test methods to reflect EPA policy and rectify previous rule deficiencies. These modifications include:
- Removed reference to Bay Area Air Quality Management District Test Method 30 for evaluating the VOC content of non-heatset inks.
- Removed reference to ASTM standard practice D–3960–87 for calculating VOC content of coatings and inks.

SDCAPCD Rule 67.18, ''Marine Coating Operations'' includes the following significant changes from the current SIP:

- Extended applicability to fresh water vessels;
- Exempted small coating users;
- Extended the limited antifoulant exemption;
- Established exemptions for materials regulated by Rules 66, 67.6, and 67.12;
- Established exemption for individuals performing coating on private vessels at their residence;
- Added definitions for a number of coatings, exempt compounds, and VOC content;
- Revised definitions of coating operation, high gloss coating, pleasure craft topcoat, pretreatment wash primer, repair and maintenance coating operation, touch-up operation, and volatile organic compound;
- Deleted definition of marine coating;
- Changed several coating limits;
- Added a reference to alternate emission control plan (approved SDCAPCD Rule 67.1) to allow flexible compliance with the coating limits;
- Increased stringency of the equipment cleanup section. The language was revised to establish detailed equipment requirements, VOC content limits, and volatility constraints;
- Added VOC content and volatility restrictions on surface preparation;
- Clarified language relating to the add-on control device requirements;
- Clarified existing recordkeeping requirements and added additional recordkeeping requirements;
- Made numerous changes to the test method section.

SJVUAPCD Rule 4607, ''Graphic Arts'' includes the following significant changes from the current SIP:

- Revised the applicability of the rule to include paper, fabric, and film coating;
- Removed ability of sources to comply by reducing VOC usage from an arbitrary baseline, effective Nov. 19, 1995;
- Added recordkeeping requirement for add-on VOC control equipment;
- Added language establishing test requirements for capture efficiency;
- Modified equipment clean-up requirements;
- Revised and added many definitions;
- Revised the rule to remove deficiencies previously identified by EPA. These revisions include:
- Modified the recordkeeping section to include requirements for fountain solutions and adhesives;
- Modified the test method section to require testing for adhesives and fountain solutions;
- Removed reference to Bay Area Air Quality Management District Test Method 30 for non-heatset inks;
- Removed reference to California Air Resources Board Test Method 100 to determine VOC control efficiency;

EPA has evaluated the submitted rules and has determined that they are consistent with the CAA, EPA regulations, and EPA policy. Therefore, BAAQMD Rule 8–43, ''Surface Coating of Marine Vessels'', PCAPCD Rule 212 ''Storage of Organic Liquids'', SDCAPCD Rules 67.16 and 67.18 (''Graphic Arts Operations'' and ''Marine Coating Operations''), and SJVUAPCD Rule 4607, ''Graphic Arts'', are being proposed for approval under section 110(k)(3) of the CAA as meeting the requirements of section 110(a) and Part D.

Nothing in this action should be construed as permitting or allowing or establishing a precedent for any future request for revision to any state implementation plan. Each request for revision to the state implementation plan shall be considered separately in light of specific technical, economic, and environmental factors and in relation to relevant statutory and regulatory requirements.

Regulatory Process

Under the Regulatory Flexibility Act, 5 U.S.C. Section 600 et seq., EPA must

prepare a regulatory flexibility analysis assessing the impact of any proposed or final rule on small entities. 5 U.S.C. 603 and 604. Alternatively, EPA may certify that the rule will not have a significant impact on a substantial number of small entities. Small entities include small businesses, small not-for-profit enterprises and government entities with jurisdiction over populations of less than 50,000.

SIP approvals under sections 110 and 301 and subchapter I, part D of the CAA do not create any new requirements, but simply approve requirements that the State is already imposing. Therefore, because the Federal SIP-approval does not impose any new requirements, it does not have a significant impact on any small entities affected. Moreover, due to the nature of the Federal-state relationship under the CAA, preparation of a regulatory flexibility analysis would constitute Federal inquiry into the economic reasonableness of state action. The CAA forbids EPA to base its actions concerning SIPs on such grounds. *Union Electric Co.* v. *U.S. E.P.A.*, 427 U.S. 246, 256–66 (S.Ct. 1976); 42 U.S.C. 7410(a)(2). The OMB has exempted this action from review under Executive Order 12866.

List of Subjects in 40 CFR Part 52

Environmental protection, Air pollution control, Hydrocarbons, Intergovernmental relations, Ozone, Reporting and recordkeeping requirements, Volatile organic compound.

Authority: 42 U.S.C. 7401–7671q.
Date signed: January 26, 1995.

Felicia Marcus,

Regional Administrator.

[FR Doc. 95–2501 Filed 2–1–95; 8:45 am]

BILLING CODE 6560–50–P

FEDERAL EMERGENCY MANAGEMENT AGENCY

44 CFR Part 67

[Docket No. FEMA–7126]

Proposed Flood Elevation Determinations

AGENCY: Federal Emergency Management Agency (FEMA).

ACTION: Proposed rule.

SUMMARY: Technical information or comments are requested on the proposed base (100-year) flood elevations and proposed base (100-year) flood elevation modifications for the communities listed below. The base (100-year) flood elevations and modified base (100-year) flood elevations are the basis for the floodplain management measures that the community is required either to adopt or to show evidence of being already in effect in order to qualify or remain qualified for participation in the National Flood Insurance Program (NFIP).

DATES: The comment period is ninety (90) days following the second publication of this proposed rule in a newspaper of local circulation in each community.

ADDRESSES: The proposed base flood elevations for each community are available for inspection at the office of the Chief Executive Officer of each community. The respective addresses are listed in the following table.

FOR FURTHER INFORMATION CONTACT: Michael K. Buckley, P.E., Chief, Hazard Identification Branch, Mitigation Directorate, 500 C Street, SW, Washington, DC 20472, (202) 646–2756.

SUPPLEMENTARY INFORMATION: The Federal Emergency Management Agency proposes to make determinations of base flood elevations and modified base flood elevations for each community listed below, in accordance with Section 110 of the Flood Disaster Protection Act of 1973, 42 U.S.C. 4104, and 44 CFR 67.4(a).

These proposed base flood and modified base flood elevations, together with the floodplain management criteria required by 44 CFR 60.3, are the minimum that are required. They should not be construed to mean that the community must change any existing ordinances that are more stringent in their floodplain management requirements. The community may at any time enact stricter requirements of its own, or pursuant to policies established by other Federal, State, or regional entities. These proposed elevations are used to meet the floodplain management requirements of the NFIP and are also used to calculate the appropriate flood insurance premium rates for new buildings built after these elevations are made final, and for the contents in these buildings.

National Environmental Policy Act

This proposed rule is categorically excluded from the requirements of 44 CFR Part 10, Environmental Consideration. No environmental impact assessment has been prepared.

Regulatory Flexibility Act

The Associate Director, Mitigation Directorate, certifies that this proposed rule is exempt from the requirements of the Regulatory Flexibility Act because proposed or modified base flood elevations are required by the Flood Disaster Protection Act of 1973, 42 U.S.C. 4104, and are required to establish and maintain community eligibility in the NFIP. No regulatory flexibility analysis has been prepared.

Regulatory Classification

This proposed rule is not a significant regulatory action under the criteria of Section 3(f) of Executive Order 12866 of September 30, 1993, Regulatory Planning and Review, 58 FR 51735.

Executive Order 12612, Federalism

This proposed rule involves no policies that have federalism implications under Executive Order 12612, Federalism, dated October 26, 1987.

Executive Order 12778, Civil Justice Reform

This proposed rule meets the applicable standards of Section 2(b)(2) of Executive Order 12778.

List of Subjects in 44 CFR Part 67

Administrative practice and procedure, Flood insurance, Reporting and recordkeeping requirements.

Accordingly, 44 CFR Part 67 is proposed to be amended as follows:

PART 67—[AMENDED]

1. The authority citation for Part 67 continues to read as follows:

Authority: 42 U.S.C. 4001 et seq.; Reorganization Plan No. 3 of 1978, 3 CFR, 1978 Comp., p. 329; E.O. 12127, 44 FR 19367, 3 CFR, 1979 Comp., p. 376.

§ 67.4 [Amended]

2. The tables published under the authority of § 67.4 are proposed to be amended as follows:

State	City/town/county	Source of flooding	Location	# Depth in feet above ground. *Elevation in feet. (NGVD)	
				Existing	Modified
Arizona	Coconino County (Unincorporated Areas).	Fanning Drive Wash	Approximately 90 feet downstream of Atchison, Topeka, and Santa Fe Railroad.	*6,803	*6,806
			Approximately 3,600 feet upstream of Atchison, Topeka, and Santa Fe Railroad.	*6,824	*6,824
Maps are available for inspection at Coconino County Community Development, Planning and Zoning, 219 East Cherry Street, Flagstaff, Arizona.					
Send comments to The Honorable Tony Gabaldon, Chairperson, County Board of Supervisors, 219 East Cherry Street, Flagstaff, Arizona 86001.					
Arizona	Flagstaff (City) Coconino County.	Fanning Drive Wash	Just upstream of Interstate Highway 40 (west side).	*6,784	*6,784
			Approximately 100 feet downstream of Industrial Drive.	*6,802	*6,800
			Approximately 300 feet downstream of U.S. Highway 89.	*6,824	*6,824
			At Fanning Drive	*6,834	*6,834
		Penstock Avenue Wash	Approximately 2,000 feet downstream of Atchison, Topeka, and Santa Fe Railroad spur.	*6,767	*6,767
			At Railhead Avenue	*6,793	*6,785
			Approximately 340 feet upstream of Commerce Avenue.	*6,829	*6,810
Maps are available for inspection at City Hall, City of Flagstaff, City Clerk's Office, Flagstaff, Arizona.					
Send comments to The Honorable Chris Bavasi, Mayor, City of Flagstaff, 211 West Aspen Avenue, Flagstaff, Arizona 86001.					
Arizona	Maricopa and Incorporated Areas.	Rainbow Wash	At confluence with Gila River	None	*717
			Approximately 12,000 feet upstream of confluence with Gila River.	None	*790
			Approximately 20,000 feet upstream of confluence with Gila River.	None	*837
			Just upstream of State Route 85	None	*907
			Approximately 19,400 feet upstream of State Route 85.	None	*991
		Rainbow Wash Tributary	At confluence with Rainbow Wash	None	*892
			Approximately 8,000 feet upstream of confluence with Rainbow Wash.	None	*924
		Luke Wash	At confluence with Gila River	None	*784
			At Narramore Road	None	*829
			Just downstream of Southern Pacific Railroad.	None	*857
		Minor Tributary to Luke Wash.	Approximately 2,050 feet upstream of confluence with Luke Wash.	None	*826
			Approximately 6,700 feet upstream of confluence with Luke Wash.	None	*858
		East Main Tributary to Luke Wash.	At Telegraph Pass Road	None	*823
			Just downstream of Southern Pacific Railroad.	None	*854
		East Subtributary to Luke Wash.	At Telegraph Pass Road	None	*823
			Approximately 3,500 feet upstream of Telegraph Pass Road.	None	*837
		Sand Tank Wash	At North Indian Road	None	*662
			At South Indian Road	None	*717
			At Interstate 8	None	*768
		Bender Wash	At confluence with Sand Tank Wash	None	*720
			At South Main Street	None	*749
			At Interstate 8	None	*779
		Unnamed Wash No. 1 (Tributary to Bender Wash).	At confluence with Bender Wash	None	*746
			At Interstate 8	None	*834
			Approximately 2,600 feet upstream of Interstate 8.	None	*852

State	City/town/county	Source of flooding	Location	# Depth in feet above ground. *Elevation in feet. (NGVD)	
				Existing	Modified
		Unnamed Wash No. 2 (Tributary to Bender Wash).	At confluence with Unnamed Wash No. 1	None	*746
			At Business Route 8	None	*801
			Approximately 5,600 feet upstream of Business Route 8.	None	*839
		Scott Avenue Wash	At Watermelon Road	None	*677
			At Southern Pacific Railroad	None	*739
			At Interstate 8	None	*755
		Star Wash	Approximately 8,700 feet upstream of confluence with Jackrabbit Wash.	None	*1,410
			Approximately 5,100 feet upstream of confluence with Tank Wash.	None	*1,485
			At confluence with Tributary D	None	*1,549
			Approximately 1,400 feet upstream of Haul Road.	None	*1,606
		Tributary A	Approximately 5,800 feet upstream of confluence with Star Wash.	None	*1,534
			At confluence with Tributary B	None	*1,551
		Tributary B	At confluence with Tributary A	None	*1,551
			Approximately 200 feet upstream of Haul Road.	None	*1,593
		Tributary C	At confluence with Star Wash	None	*1,579
			Approximately 4,100 feet upstream of confluence with Star Wash.	None	*1,610
		Tributary D	At confluence with Star Wash	None	*1,539
			Approximately 4,500 feet upstream of confluence with Tributary E.	None	*1,600
		Tank Wash	Approximately 3,300 feet upstream of confluence with Star Wash.	None	*1,470
			Approximately 20,000 feet upstream of confluence with Star Wash.	None	*1,560
			Approximately 4,900 feet upstream of confluence with South Branch Tank Wash.	None	*1,650
		South Branch Tank Wash	Approximately 1,000 feet upstream of confluence with Tank Wash.	None	*1,626
			Approximately 4,600 feet upstream of confluence with Tank Wash.	None	*1,649
		Powerline Wash	Approximately 4,800 feet upstream of confluence with Star Wash.	None	*1,443
			Approximately 27,700 feet upstream of confluence with Star Wash.	None	*1,570
			Approximately 55,000 feet upstream of confluence with Star Wash.	None	*1,741
		Daggs Wash	Approximately 900 feet upstream of confluence with Hassayampa River.	None	*1,255
			Just upstream of Central Arizona Project Canal.	None	*1,382
			Approximately 35,700 feet upstream of confluence with Hassayampa River.	None	*1,482
			Approximately 50,000 feet upstream of confluence with Hassayampa River.	None	*1,564
			Just upstream of Peakview Road	None	*1,672
		West Breakout Wash	At downstream confluence with Daggs Wash.	None	*1,610
			At upstream confluence with Daggs Wash	None	*1,655
		East Split Flow	At downstream confluence with Daggs Wash.	None	*1,610
			At upstream confluence with Daggs Wash	None	*1,628
		Apache Wash	Approximately 12,700 feet downstream of confluence with Paradise Wash.	None	*1,660
			At confluence with Paradise Wash	None	*1,736
			At New River Road	None	*1,886
			Approximately 2,500 feet upstream of confluence with Apache Wash West Fork.	None	*2,022
		Apache Wash Split Flow	At downstream confluence with Apache Wash.	None	*1,786

State	City/town/county	Source of flooding	Location	# Depth in feet above ground. *Elevation in feet. (NGVD)	
				Existing	Modified
			At upstream confluence with Apache Wash.	None	*1,811
		West Fork Apache Wash ..	At confluence with Apache Wash	None	*1,992
			Approximately 3,000 feet above confluence with Apache Wash.	None	*2,044
		Paradise Wash	At confluence with Apache Wash	None	*1,736
			At confluence with Ranieri Tank Wash	None	*1,832
			Approximately 7,100 feet upstream of New River Road.	None	*2,015
		West Fork Paradise Wash	At confluence with Paradise Wash	None	*1,794
			Approximately 5,100 feet upstream of Carefree Highway.	None	*1,851
		Ranieri Tank Wash	At confluence with Paradise Wash	None	*1,832
			Approximately 3,850 feet upstream of unnamed road.	None	*1,892
		Desert Hills Wash	At confluence with Apache Wash	None	*1,740
			At Carefree Highway	None	*1,780
			Approximately 50 feet upstream of 20th Street.	None	*1,898
		Desert Hills Wash Tributary.	At confluence with Desert Hills Wash	None	*1,885
			Approximately 50 feet upstream of La-Salle Road.	None	*1,902
		East Fork Desert Lake Wash.	At confluence with Desert Lake Wash	None	*1,781
			Approximately 1,100 feet upstream of 10th Street.	None	*1,797
		Desert Lake Wash	At confluence with Desert Hills Wash	None	*1,775
			Approximately 1,200 feet upstream of Gavin Road.	None	*1,796
		Mesquite Tank Wash	Approximately 900 feet downstream of Cave Buttes Recreational Area boundary limits.	None	*1,657
			Approximately 7,700 feet upstream of Cave Buttes Recreational Area boundary limits.	None	*1,722
		Beardsley Canal Wash	Approximately 4,900 feet downstream of Northern Avenue.	None	*1,200
			At Olive Avenue	None	*1,275
			Approximately 2,600 feet upstream of Peoria Avenue Extended.	None	*1,322
		Cholla Wash	At confluence with Beardsley Canal Wash	None	*1,249
			At Olive Avenue	None	*1,299
			Approximately 17,600 feet upstream of Olive Avenue.	None	*1,843
		North Fork Cholla Wash ...	At confluence with Cholla Wash	None	*1,675
			Approximately 2,770 feet upstream of confluence with Cholla Wash.	None	*1,950
		Waterfall Wash	At confluence with Beardsley Canal	None	*1,278
			Approximately 18,800 feet upstream of confluence with Beardsley Canal.	None	*1,646
		White Tank No. 3 Wash ...	Approximately 9,400 feet downstream of Northern Avenue Extended.	None	*1,198
			Approximately 7,300 feet upstream of Northern Avenue Extended.	None	*1,444
		Bedrock Wash	Approximately 4,700 feet downstream of confluence with North Fork Bedrock Wash.	None	*1,199
			Approximately 6,900 feet upstream of confluence with North Fork Bedrock Wash.	None	*1,466
		North Fork Bedrock Wash	At confluence with Bedrock Wash	None	*1,239
			Approximately 9,200 feet upstream of confluence with Bedrock Wash.	None	*1,442
		Jackrabbit Trail Wash	Approximately 3,650 feet downstream of Interstate 10 eastbound off ramp.	None	*1,041
			At Indian School Road	None	*1,156
			At Medlock Drive	None	*1,186
		Tuthill Dike Wash	Approximately 4,800 feet downstream of Interstate 10.	None	*1,144

State	City/town/county	Source of flooding	Location	# Depth in feet above ground. *Elevation in feet. (NGVD)	
				Existing	Modified
			At Indian School Road Extended	None	*1,214
			Approximately 2,700 feet upstream of Camelback Road Extended.	None	*1,286
		Bulldozer Wash	At confluence with Tuthill Dike Wash	None	*1,095
			Approximately 13,800 feet upstream of confluence with Tuthill Dike Wash.	None	*1,678
		Caterpillar Wash	At confluence with Tuthill Dike Wash	None	*1,191
			Approximately 11,750 feet upstream of confluence with Tuthill Dike Wash.	None	*1,402
		Tractor Wash	At confluence with Tuthill Dike Wash	None	*1,213
			Approximately 3,400 feet upstream of Camelback Road Extended.	None	*1,452
		Caterpillar Dike Wash	At confluence with Tuthill Dike Wash	None	*1,285
			Approximately 2,700 feet upstream of Caterpillar Proving Grounds Road.	None	*1,296
		White Granite Wash	Approximately 2,000 feet downstream of Caterpillar Proving Grounds Road.	None	*1,348
			Approximately 5,600 feet upstream of Caterpillar Proving Grounds Road.	None	*1,512
		North Fork White Granite Wash.	At confluence with White Granite Wash	None	*1,399
			Approximately 3,500 feet upstream of confluence with White Granite Wash.	None	*1,510
		191st Avenue Wash	Approximately 600 feet downstream of McDowell Road.	None	*1,057
			At Indian School Road	None	*1,135
			Approximately 4,700 feet upstream of Camelback Road.	None	*1,166
		Perryville Road Wash	Approximately 2,500 feet downstream of the intersection of Camelback Road and Perryville Road.	None	*1,121
			Approximately 900 feet upstream of Northern Avenue.	None	*1,229
		Bullard Wash	Approximately 900 feet downstream of Lower Buckeye Road.	None	*944
			At McDowell Road	None	*994
			Approximately 23,900 feet upstream of McDowell Road.	None	*1,063
		Lower El Mirage Wash	At confluence with Agua Fria River	None	*1,096
			Approximately 1,550 feet upstream of Dysart Road.	None	*1,147
		Lower El Mirage Wash Tributary.	At confluence with Lower El Mirage Wash	None	*1,119
			At Greenway Road	None	*1,166
			At the intersection of Greenway Road and Litchfield Road.	None	*1,182
		Litchfield Wash	Approximately 5,700 feet downstream of Litchfield Road.	None	*1,064
			At Litchfield Road	None	*1,077
		Interstate 10	At confluence with Jackrabbit Trail Wash	None	*1,071
			Just downstream of Tuthill Dike	None	*1,089

State	City/town/county	Source of flooding	Location	# Depth in feet above ground. *Elevation in feet. (NGVD)	
				Existing	Modified
In the City of Avondale, maps are available for inspection at 1211 South Fourth Street. Send comments to The Honorable Raymond W. Bedoya at 525 North Central Avenue.					
In the Town of Buckeye, maps are available for inspection at 100 North Apache. Send comments to The Honorable Joe Schettino at 100 North Apache.					
In the Town of Carefree, maps are available for inspection at 100 Easy Street. Send comments to The Honorable Skip Rimsza at 200 West Washington Street.					
In the Town of Cave Creek, maps are available for inspection at 37622 North Cave Creek Road. Send comments to The Honorable Laura Cox at 37622 North Cave Creek Road.					
In the City of Chandler, maps are available for inspection at 200 East Commonwealth Avenue. Send comments to The Honorable Jay Tibshraeny at 25 South Arizona Place.					
In the City of El Mirage, maps are available for inspection at 14405 North Palm Street. Send comments to The Honorable Maggie Reese at 14405 North Palm Street.					
In the Town of Gila Bend, maps are available for inspection at 644 West Pima Street. Send comments to The Honorable Duke Fox, P.O. Box A, Gila Bend, AZ 85337.					
In the Town of Gilbert, maps are available for inspection at 1025 South Gilbert Road. Send comments to The Honorable Wilburn Brown at 1025 South Gilbert Road.					
In the City of Glendale, maps are available for inspection at 5850 West Glendale Avenue, 3rd floor. Send comments to The Honorable Elaine Scruggs at 5850 West Glendale Avenue.					
In the City of Goodyear, maps are available for inspection at 119 North Litchfield Road. Send comments to The Honorable Carl Gow at 629 North Litchfield Road.					
In the Town of Guadalupe, maps are available for inspection at 9050 South Avenida del Yaqui. Send comments to The Honorable Anna Hernandez at 9050 South Avenida del Yaqui.					
In the City of Litchfield Park, maps are available for inspection at 214 West Indian School Road. Send comments to The Honorable Perry Hubbard at 214 West Indian School Road.					
In Maricopa County, maps are available for inspection at 301 West Jefferson Street, 10th floor. Send comments to The Honorable Betsey Bayless at 301 West Jefferson Street.					
In the Town of Paradise Valley, maps are available for inspection at 6517 East Lincoln Drive. Send comments to The Honorable Joan Horne at 6401 East Lincoln Drive.					
In the City of Phoenix, maps are available for inspection at 200 West Washington Street, 5th floor. Send comments to The Honorable Thelda Williams at 200 West Washington Street.					
In the City of Scottsdale, maps are available for inspection at 3939 North Civic Center Boulevard. Send comments to The Honorable Herbert R. Drinkwater at 3939 North Civic Center Boulevard.					
In the City of Surprise, maps are available for inspection at 12425 West Bell Road, Building D–100. Send comments to The Honorable Roy Villanueva at 12425 West Bell Road, Building D–100.					
In the City of Tempe, maps are available for inspection at 31 East 5th Street. Send comments to The Honorable Neil Giuliano at 31 East 5th Street.					
California	Cathedral (City) Riverside County.	Whitewater River	Approximately 1,850 feet downstream of Cathedral Canyon Drive.	*299	*299
			Approximately 1,700 feet upstream of Cathedral Canyon Drive.	*315	*321
			Approximately 2,000 feet downstream of 34th Avenue (Dinah Shore Drive).	* 321	*323
			Approximately 2,000 feet upstream of 34th Avenue (Dinah Shore Drive).	*342	*340
			At Ramon Road	*366	*362
			Approximately 4,000 feet upstream of Ramon Road.	*389	*388
			Approximately 4,200 feet downstream of Vista Chino Road.	*414	*414
			Approximately 1,750 feet downstream of Vista Chino Road.	*434	*432
			Approximately 1,500 feet upstream of Vista Chino Road.	None	*455
			Approximately 4,250 feet upstream of Vista Chino Road.	None	*476
		Whitewater River Left Overbank Flooding.	Approximately 10,400 feet downstream of 34th Avenue (Dinah Shore Drive).	None	*278
			Approximately 8,600 feet downstream of 34th Avenue (Dinah Shore Drive).	None	*285
			Approximately 5,700 feet downstream of 34th Avenue (Dinah Shore Drive).	None	*301
			Approximately 1,600 feet downstream of 34th Avenue (Dinah Shore Drive).	None	*318

State	City/town/county	Source of flooding	Location	# Depth in feet above ground. *Elevation in feet. (NGVD)	
				Existing	Modified
			Approximately 400 feet upstream of 34th Avenue (Dinah Shore Drive).	None	*330
			Approximately 100 feet upstream of Ramon Road.	None	*360
			Approximately 100 feet upstream of 30th Avenue.	None	*395
			Approximately 100 feet downstream of Vista Chino Road.	None	*436
			Approximately 1,800 feet upstream of Vista Chino Road.	None	*451

Maps are available for inspection at the Building and Planning Department, City of Cathedral City, 35325 Date Palm Drive, #136, Cathedral City, California.

Send comments to The Honorable Carol Englehard, Mayor, City of Cathedral City, P.O. Box 5001, Cathedral City, California 92235–0349.

California	Corona (City) Riverside County.	Arlington Channel	Approximately 600 feet downstream of Riverside Freeway.	*610	*604
			Approximately 200 feet upstream of Riverside Freeway.	*617	*612
			Approximately 200 feet downstream of Parkridge Avenue.	*628	*625
			Approximately 3,800 feet upstream of Parkridge Avenue.	*648	*647
			Approximately 900 feet upstream of Atchison, Topeka, and Santa Fe Railroad.	*665	*664
		South Norco Channel Tributary A.	Approximately 3,150 feet upstream of Hamner Avenue.	*617	*617
			Approximately 4,900 feet upstream of Hamner Avenue.	*628	*629
		Temescal Wash	Approximately 900 feet downstream of Lincoln Avenue.	*563	*563
			Approximately 400 feet upstream of Lincoln Avenue.	*568	*572
			At Cota Street	*572	*572
			Approximately 600 feet upstream of River Road.	*580	*580
			Approximately 150 feet upstream of Joy Street.	*591	*591
			Approximately 100 feet downstream of Atchison, Topeka, and Santa Fe Railroad.	*611	*605
			Approximately 1,600 feet upstream of Magnolia Avenue.	*656	*653
			Approximately 2,800 feet upstream of Magnolia Avenue.	*663	*660
			Approximately 4,600 feet upstream of Magnolia Avenue.	None	*667
			Approximately 6,600 feet upstream of Magnolia Avenue.	None	*684

Maps are available for inspection at the Public Works Department, City of Corona, 815 West 6th Street, Corona, California.

Send comments to The Honorable Bill Miller, Mayor, City of Corona, P.O. Box 940, Corona, California 91718.

California	El Dorado County (Unincorporated Areas).	New York Creek	Approximately 500 feet downstream of Green Valley Road.	None	*583
			Approximately 100 feet upstream of Green Valley Road.	None	*594
			Approximately 650 feet upstream of Timberline Ridge Drive.	None	*600
			Approximately 3,000 feet upstream of Timberline Ridge Drive.	None	*651
			Approximately 2,000 feet downstream of St. Andrews Drive.	None	*707
			Approximately 100 feet upstream of St. Andrews Drive.	None	*730
			Approximately 1,150 feet downstream of Harvard Way.	None	*747
			Approximately 150 feet upstream of Harvard Way.	None	*770

State	City/town/county	Source of flooding	Location	# Depth in feet above ground. *Elevation in feet. (NGVD)	
				Existing	Modified
		Governor Drive Tributary ..	Approximately 550 feet downstream of Tam O'Shanter Drive.	None	*720
			Approximately 80 feet downstream of El Dorado Hills Boulevard.	None	*735
			Approximately 400 feet upstream of El Dorado Hills Boulevard.	None	*745
			Approximately 50 feet upstream of Merrium Lane.	None	*761
Maps are available for inspection at the Department of Transportation, El Dorado County, 2850 Fairlane Court, Placerville, California.					
Send comments to The Honorable John Upton, Chairman, El Dorado County Board of Supervisors, 330 Fair Lane, Placerville, California 95667.					
California	Lake Elsinore (City) Riverside County.	Temescal Wash	Approximately 800 feet downstream of Temescal Canyon Road.	None	*1,214
			At Lake Street	None	*1,222
			Approximately 2,400 feet upstream of Lake Street.	None	*1,230
			Approximately 5,700 feet upstream of Lake Street.	None	*1,243
			Approximately 8,600 feet upstream of Lake Street.	None	*1,250
			Approximately 3,600 feet downstream of Nichols Road.	None	*1,253
			Approximately 150 feet downstream of Atchison, Topeka, and Santa Fe Railroad.	*1,258	*1,257
			Approximately 400 feet upstream of Atchison, Topeka, and Santa Fe Railroad.	*1,258	*1,258
Maps are available for inspection at City Hall, City of Lake Elsinore, 130 South Main Street, Lake Elsinore, California.					
Send comments to The Honorable Gary Washburn, Mayor, City of Lake Elsinore, 130 South Main Street, Lake Elsinore, California 92530.					
California	Murrieta (City) Riverside County.	Murrieta Creek	At Cherry Street	None	*1,028
			Approximately 5,000 feet upstream of Cherry Street.	None	*1,038
			Approximately 4,400 feet downstream of Washington Avenue.	None	*1,042
			Approximately 1,300 feet downstream of Washington Avenue.	*1,053	*1,057
			At Washington Avenue	*1,060	*1,061
			Approximately 1,300 feet upstream of Washington Avenue.	*1,065	*1,065
			Approximately 50 feet downstream of Tenaja Road.	*1,105	*1,105
			Approximately 1,050 feet downstream of Magnolia Street.	*1,115	*1,114
			Approximately 450 feet downstream of Magnolia Street.	*1,117	*1,118
			Approximately 900 feet upstream of Magnolia Street.	None	*1,125
			Approximately 4,800 feet upstream of Magnolia Street.	None	*1,150
			Approximately 7,500 feet upstream of Magnolia Street.	None	*1,170
Maps are available for inspection at the Public Works Department, City of Murrieta, 26442 Beckman Court, Murrieta, California.					
Send comments to The Honorable Jan van Haaster, Mayor, City of Murrieta, 26442 Beckman Court, Murrieta, California 92562.					
California	Palm Desert (City) Riverside County.	Whitewater River-Left Overbank Flooding.	At Monterey Avenue	None	*198
Maps are available for inspection at the Public Works Department, City of Palm Desert, 73510 Fred Waring Drive, Palm Desert, California.					
Send comments to The Honorable S. Roy Wilson, Mayor, City of Palm Desert, 73510 Fred Waring Drive, Palm Desert, California 92260.					
California	Palm Springs (City) Riverside County.	Palm Canyon Wash	Approximately 460 feet downstream of Bogert Drive.	*537	*537
			Approximately 1,240 feet upstream of Bogert Trail.	*546	*548

State	City/town/county	Source of flooding	Location	# Depth in feet above ground. *Elevation in feet. (NGVD)	
				Existing	Modified
		Tahquitz Creek	Approximately 2,100 feet downstream of Farrell Drive.	*378	*378
			Approximately 1,100 feet downstream of Farrell Drive.	*382	*382
			Approximately 1,800 feet upstream of Farrell Drive.	*397	*395
			Approximately 700 feet downstream of Sunrise Way.	*400	*398
			Approximately 2,300 feet upstream of Sunrise Way.	*413	*408
			Approximately 1,650 feet downstream of Palm Canyon Drive.	*420	*418
			At Palm Canyon Drive	*447	*443
		Whitewater River	Approximately 2,900 feet downstream of 34th Avenue (Dinah Shore Drive).	*316	*321
			Approximately 1,950 feet downstream of 34th Avenue (Dinah Shore Drive).	*322	*323
			At 34th Avenue (Dinah Shore Drive)	*335	*333
			Approximately 2,060 feet upstream of 34th Avenue (Dinah Shore Drive).	*343	*341
			At Ramon Road	*362	*362
			Approximately 1,900 feet downstream of Vista Chino Road.	*432	*432
			Approximately 2,000 feet upstream of Vista Chino Road.	*461	*459
			Approximately 1,050 feet downstream of Bogie Road.	*473	*472
			Approximately 500 feet downstream of Bogie Road.	*477	*477

Maps are available for inspection at the Engineering Department, City of Palm Springs, 3200 East Tahquitz Canyon Way, Palm Springs, California.

Send comments to The Honorable Lloyd Maryanov, Mayor, City of Palm Springs, P.O. Box 2743, Palm Springs, California 92263–2743.

California	Rancho Mirage (City) Riverside County.	Whitewater River Left Overbank Flooding.	At Monterey Avenue	None	*198
			Approximately 2,300 feet upstream of Monterey Avenue.	None	*210
			Approximately 2,500 feet downstream of Country Club Drive.	None	*220
			Approximately 2,150 feet upstream of Country Club Drive.	None	*240
			Approximately 2,100 feet upstream of Wonder Palms Drive (Frank Sinatra Lane).	None	*260
			Approximately 6,000 feet upstream of Wonder Palms Drive.	None	*277
			Approximately 10,200 feet upstream of Wonder Palms Drive.	None	*296

Maps are available for inspection at the Engineering Department, City of Rancho Mirage, 69825 Highway 111, Rancho Mirage, California.

Send Comments to The Honorable Sybil Jaffy, Mayor, City of Rancho Mirage, 69825 Highway 111, Rancho Mirage, California 92270.

California	Riverside County (Unincorporated Areas).	Murrieta Creek	Approximately 4,600 feet downstream of Clinton Keith Road.	None	*1,165
			Approximately 100 feet downstream of Clinton Keith Road.	None	*1,190
			Approximately 1,900 feet downstream of McVicar Street.	None	*1,204
			Approximately 500 feet upstream of McVicar Street.	None	*1,217
			Approximately 1,500 feet downstream of Murrieta Road.	*1,412	*1,406
			Approximately 1,400 feet upstream of Murrieta Road.	*1,413	*1,409
			Approximately 900 feet downstream of Bradley Road.	*1,415	*1,412

State	City/town/county	Source of flooding	Location	# Depth in feet above ground. *Elevation in feet. (NGVD)	
				Existing	Modified
			Approximately 2,700 feet upstream of Bradley Road.	*1,418	*1,417
			Approximately 3,050 feet upstream of Bradley Road.	None	*1,417
		Sun City Channel A–A	Approximately 1,950 feet downstream of Ridgemoor Road.	*1,413	*1,409
			Approximately 1,000 feet downstream of Sun City Boulevard.	*1,413	*1,410
			Approximately 600 feet downstream of Cherry Hills Boulevard.	*1,413	*1,413
		San Jacinto River	Approximately 100 feet downstream of Ramona Expressway.	None	*1,428
			Approximately 100 feet downstream of Davis Street.	None	*1,429
			Approximately 8,000 feet upstream of Davis Street.	None	*1,430
			Approximately 800 feet downstream of Bridge Street.	None	*1,430
			At Bridge Street	None	*1,432
		San Jacinto River-Secondary Channel.	Approximately 4,800 feet downstream of Davis Street.	None	*1,429
			Approximately 5,100 feet upstream of Davis Street.	None	*1,430
		Temescal Wash	Approximately 700 feet downstream of Atchison, Topeka, and Santa Fe Railroad Bridge.	None	*684
			Just upstream of Atchison, Topeka, and Santa Fe Railroad Bridge.	None	*692
			Approximately 2,400 feet upstream of the Atchison, Topeka, and Santa Fe Railroad Bridge.	None	*698
			Approximately 6,300 feet upstream of Atchison, Topeka, and Santa Fe Railroad Bridge.	None	*733
			Approximately 4,600 feet downstream of Cajalco Road.	None	*762
			Just upstream of Cajalco Road	None	*802
			Approximately 2,200 feet downstream of the abandoned railroad.	None	*830
			Approximately 3,100 feet upstream of the abandoned railroad.	None	*870
			Approximately 3,250 feet downstream of the road to El Sobrante Landfill.	None	*900
			Approximately 300 feet upstream of the road to El Sobrante Landfill.	None	*930
			Approximately 100 feet downstream of Park Canyon Drive.	None	*944
			Approximately 3,650 feet upstream of Park Canyon Drive.	None	*969
			Approximately 5,300 feet upstream of Park Canyon Drive.	None	*983
			Approximately 3,400 feet downstream of Lee Lake Spillway.	None	*1,066
			Approximately 100 feet downstream of Lee Lake Spillway.	None	*1,121
			Just upstream of Lee Lake Spillway	None	*1,154
			Approximately 4,900 feet upstream of Lee Lake Spillway.	None	*1,155
			Approximately 2,000 feet downstream of Temescal Canyon Road.	None	*1,170
			Approximately 50 feet upstream of Corona Freeway.	None	*1,181
			Approximately 1,100 feet upstream of Pacific Clay Larson Lane.	None	*1,214

State	City/town/county	Source of flooding	Location	# Depth in feet above ground. *Elevation in feet. (NGVD)	
				Existing	Modified
Maps are available for inspection at Riverside County Flood Control and Water Conservation District, 1995 Market Street, Riverside, California.					
Send comments to The Honorable Kay Ceniceros, Chairperson, Riverside County Board of Supervisors, P.O. Box 1359, Riverside, California 92502.					
California	Sonoma County (Unincorporated Areas).	Russian River	Approximately 9,500 feet upstream of State Highway 128.	*181	*181
			Approximately 12,700 feet upstream of State Highway 128.	None	*184
			Approximately 17,000 feet upstream of State Highway 128.	None	*188
			Approximately 6,800 feet downstream of Geyserville Road.	None	*199
			Approximately 5,400 feet downstream of Geyserville Road.	*202	*202
Maps are available for inspection at Sonoma County Permits and Resource Management, 575 Administration Way, Room 114A, Santa Rosa, California.					
Send comments to The Honorable Michael Cale, Chairman, Sonoma County Board of Supervisors, 575 Administration Way, Room 101A, Santa Rosa, California 95403.					
California	Temecula (City) Riverside County.	Murrieta Creek	Approximately 1,800 feet downstream of Winchester Road.	*1,017	*1,017
			Approximately 1,100 feet downstream of Winchester Road.	None	*1,019
			Approximately 400 feet upstream of Winchester Road.	None	*1,022
			Approximately 1,700 feet upstream of Winchester Road.	None	*1,024
			Approximately 3,700 feet upstream of Winchester Road.	None	*1,027
Maps are available for inspection at the Office of the City Engineer, 43174 Business Park Drive, Temecula, California.					
Send comments to The Honorable Ron Roberts, Mayor, City of Temecula, 43174 Business Park Drive, Temecula, California 92590–3606.					
Hawaii	Honolulu (City and County).	Kapakahi Stream	Approximately 3,860 feet downstream of Farrington Highway.	None	*2
			Approximately 320 feet downstream of Farrington Highway.	None	*10
			Approximately 900 feet upstream of Farrington Highway.	None	*15
		Makaha Stream	Just upstream of Farrington Highway	None	*13
			Approximately 3,700 feet upstream of Farrington Highway.	None	*83
			Approximately 600 feet upstream of Huipu Drive.	None	*237
		Wailani Canal	Approximately 90 feet downstream of Waipio Access Road.	None	*2
			Approximately 900 feet upstream of Waipio Access Road.	None	*3
			Approximately 3,100 feet upstream of Waipio Access Road.	None	*5
Maps are available for inspection at the Department of Land Utilization, Information Center, Honolulu Municipal Building, First Floor, 650 South King Street, Honolulu, Hawaii.					
Send comments to The Honorable Frank F. Fasi, Mayor, City and County of Honolulu, City Hall, Hawaii 96813.					
Hawaii	Kauai County (Unincorporated Areas).	Pacific Ocean	In the vicinity of the intersection of Kaumualii Highway and Akekeke Road.	*8	*10–14
			In the vicinity of the intersection of Kaumualii Highway and Aukuu Road.	*8–10	*8–12
			In the vicinity of Kikiaola Harbor	*9	*10–11
			In the vicinity of the intersection of Pokole Road and Laau Road.	*10	*9–13
			In the vicinity of the intersection of Kaalani Road and Kuiloko Road and the Port Allen Airport.	*10–11	*5–14

State	City/town/county	Source of flooding	Location	# Depth in feet above ground. *Elevation in feet. (NGVD)	
				Existing	Modified
			At Hanapepe Bay, in the vicinity of the mouth of the Hanapepe River.	*10	*9–13
			At Kukuiula Bay, in the vicinity of the intersection of Lawai Road and Alania Road.	*10–13	*13–16
			At Nahumaalo Point, near the mouth of Waikomo Stream.	*14	*16–17
			In the vicinity of the intersection of Hoone Road with Nalo Road and Maa Road.	*14–18	*16–19
			At Keoniloa Bay	*6	*10
Maps are available for inspection at Kauai County Department of Public Works, 3021 Umi Street, Lihue, Hawaii.					
Send comments to The Honorable JoAnn Yukimura, Mayor, Kauai County, 4963 Rice Street, Lihue, Hawaii 96766.					
Kansas	Dodge City (City) Ford County.	Arkansas River	Approximately 7,000 feet downstream of South Second Avenue.	*2,473	*2,474
			Approximately 4,000 feet downstream of South Second Avenue.	*2,475	*2,478
			Approximately 600 feet downstream of South Second Avenue.	*2,479	*2,482
			Approximately 150 feet downstream of the Atchison, Topeka, and Santa Fe Railroad.	*2,483	*2,486
			Approximately 100 feet downstream of 14th Avenue.	*2,485	*2,488
		Chilton Creek	Approximately 100 feet downstream of Wyatt Earp Boulevard.	N/A	*2,489
			Approximately 175 feet downstream of West Ash Street.	N/A	*2,514
			Approximately 175 feet downstream of Comanche Street.	N/A	*2,536
			Approximately 1,200 feet upstream of Comanche Street.	N/A	*2,550
			Approximately 2,450 feet upstream of Comanche Street.	N/A	*2,562
Maps are available for inspection at the City Engineer's Office, City of Dodge City, 705 First Avenue, Dodge City, Kansas.					
Send comments to The Honorable Bob Carlson, Mayor, City of Dodge City, P.O. Box 880, Dodge City, Kansas 67801.					
Kansas	Ford County (Unincorporated Areas).	Arkansas River	Approximately 160 feet downstream of an unimproved road.	*2,456	*2,456
			Approximately 700 feet downstream of South East Bypass Bridge.	*2,466	*2,467
			Approximately 900 feet upstream of 14th Avenue.	*2,490	*2,490
			Approximately 6,550 feet upstream of 14th Avenue.	*2,494	*2,495
			Approximately 7,860 feet upstream of 14th Avenue.	*2,497	*2,497
Maps are available for inspection at the Ford County Engineer's Office, 100 Gunsmoke, Dodge City, Kansas.					
Send comments to The Honorable Don Wiles, Chairman, Ford County Board of Commissioners, 100 Gunsmoke, Dodge City, Kansas 67801.					
North Dakota	Minot (City) Ward County.	Souris River	37th Avenue Southeast	*1,546	*1,544
			Approximately 1,600 feet upstream of 27th Street Southeast.	*1,551	*1,546
			Aproximately 800 feet upstream of 8th Avenue Southeast.	*1,551	*1,547
			Approximately 500 feet downstream of 1st Avenue Northeast.	*1,553	*1,549
			Approximately 1,100 feet upstream of 4th Avenue Northwest.	*1,557	*1,551
			Approximately 1,100 feet downstream of 3rd Avenue Northwest.	*1,557	*1,552
			Approximately 800 feet downstream of River Road.	*1,559	*1,554
			Approximately 800 feet upstream of River Road.	*1,559	*1,555

State	City/town/county	Source of flooding	Location	# Depth in feet above ground. *Elevation in feet. (NGVD)	
				Existing	Modified
			Approximately 3,000 feet upstream of U.S. Highway 83 Bypass.	*1,563	*1,559
			At confluence with Gassman Coulee	*1,567	*1,563
			Approximately 3,100 feet downstream of 58th Street Northwest.	*1,568	*1,565
			Approximately 6,300 feet upstream of 58th Street Northwest.	*1,570	*1,567
Maps are available for inspection at City Hall, City of Minot, Engineering Department, 515 Second Avenue, SW, Minot, North Dakota.					
Send comments to The Honorable Orlin Backes, Mayor, City of Minot, 2425 Brookside Drive, Minot, North Dakota 58701.					
North Dakota	Velva (City) McHenry County.	Souris River	Approximately 100 feet downstream of Main Street.	*1,511	*1,508
			Approximately 2,200 feet upstream of Main Street.	*1,513	*1,509
			Approximately 2,600 feet upstream of Main Street.	*1,513	*1,509
Maps are available for inspection at City Hall, City of Velva, 101 First Street West, Velva, North Dakota.					
Send comments to The Honorable Ken Fox, Mayor, City of Velva, P.O. Box 219, Velva, North Dakota 58790.					

(Catalog of Federal Domestic Assistance No. 83.100, ''Flood Insurance.'')

Dated: January 26, 1995.

Richard T. Moore,

Associate Director for Mitigation.

[FR Doc. 95–2591 Filed 2–1–95; 8:45 am]

BILLING CODE 6718–03–P

FEDERAL MARITIME COMMISSION

46 CFR Part 572

[Docket No. 94–31]

Information Form and Post-Effective Reporting Requirements for Agreements Among Ocean Common Carriers Subject to the Shipping Act of 1984

AGENCY: Federal Maritime Commission.

ACTION: Proposed rule.

SUMMARY: The proposed rule in this proceeding published December 5, 1994 (59 FR 62372), would revise the Commission's regulations governing information submission requirements for agreements among ocean common carriers subject to the Shipping Act of 1984. This extends the deadline for filing comments to February 17, 1995.

DATES: Comments due February 17, 1995.

ADDRESSES: Send comments (original and 15 copies) to: Joseph C. Polking, Secretary, Federal Maritime Commission, 800 North Capitol St. NW., Washington, DC 20573, (202) 523–5725.

FOR FURTHER INFORMATION CONTACT:

Robert D. Bourgoin, General Counsel, Federal Maritime Commission, 800 North Capitol St. NW., Washington, DC 20573, (202) 523–5740

Austin L. Schmitt, Director, Bureau of Trade Monitoring and Analysis, Federal Maritime Commission, 800 North Capitol St. NW., Washington, DC 20573, (202) 523–5787

By the Commission.

Joseph C. Polking,

Secretary.

[FR Doc. 95–2509 Filed 2–1–95; 8:45 am]

BILLING CODE 6730–01–M

FEDERAL COMMUNICATIONS COMMISSION

47 CFR Chapter I

[ET Docket No. 93–198; FCC 94–345]

Preparation for International Telecommunication Union World Radio Conferences

AGENCY: Federal Communications Commission.

ACTION: Order; termination of proceeding.

SUMMARY: This Order terminates ET Docket No. 93–198, which the Commission initiated to seek public comment to help establish U.S. proposals and positions for the 1993 World Radiocommunication Conference (WRC–93). WRC–93 concluded in November, 1993. Accordingly, this proceeding is no longer necessary. Public input for future WRCs will be obtained in IC Docket No. 94–31.

ADDRESSES: Federal Communications Commission, 1919 M St. NW., Washington, DC 20554.

FOR FURTHER INFORMATION CONTACT: Maura McGowan, Office of Engineering and Technology, (202) 739–0722.

SUPPLEMENTARY INFORMATION:

Order

Adopted: December 23, 1994.

Released: January 18, 1995.

By the Chief, Office of Engineering and Technology: 1. By this action, the Commission terminates its proceeding initiated to seek public comment regarding U.S. proposals and positions for the 1993 International Telecommunications Union (ITU) World Radio Conference (WRC–93).

2. The 1992 ITU Additional Plenipotentiary Conference (APP) adopted a major restructuring of the ITU. Part of the restructuring was a recommendation that World Radiocommunication Conferences (WRCs) normally convene every two years, and that a four year conference planning cycle be initiated. Thus, each WRC would consider current substantive issues, develop a recommended agenda for the next WRC in two years, and recommend a preliminary agenda for the following WRC in four years. The first of these regularly scheduled conferences, WRC–93, convened in Geneva on November 15, 1993.

3. In preparation for WRC–93, on June 24, 1993, we initiated the instant proceeding to seek public comment regarding U.S. proposals and positions in Notice of Inquiry, ET Docket No. 93–198, 58 Fed. Reg. 36630 (7/8/93). On September 17, 1993, the Commission and the National Telecommunication and Information Administration jointly

forwarded their recommended proposals for the conference to the Department of State. No other action has been taken in this proceeding.

4. WRC–93 adopted recommendations to the ITU's Administrative Council for a substantive agenda for WRC–95, and a preliminary agenda for WRC–97. Because WRC–93 has concluded, and no further purpose would be served by keeping this docket open, we are hereby terminating this proceeding. Public comment concerning future World Radicommuniction Conferences will be sought in IC Docket No. 94–31.

5. Accordingly, *It Is Ordered* That, pursuant to the authority of sections 4(i) and 303(r) of the Communications Act of 1934, as amended, 47 U.S.C. 154(i) and 303(r), this proceeding is terminated.

Federal Communications Commission.

LaVera F. Marshall,

Acting Secretary.

[FR Doc. 95–2507 Filed 2–1–95; 8:45 am]

BILLING CODE 6712–01–M

---

47 CFR Part 73

[MM Docket Nos. 94–150, 92–51, and 87–154; FCC 94–324]

Broadcast Services; Television and Radio Broadcasting

AGENCY: Federal Communications Commission.

ACTION: Notice of proposed rulemaking.

SUMMARY: The Commission, through Notice of Proposed Rule Making (NPRM) initiates a thorough review of its broadcast media attribution rules contained in Notes to 47 CFR 73.3555. This Notice of Proposed Rule Making requests comment on the many issues pertinent to our analysis of whether the current attribution rules continue to be effective in serving their goals or whether changes to the rules are required. This proceeding is appropriate to ensure that the broadcast attribution rules conform with other related Commission rules and to ensure that these rules effectively implement the Commission's broadcast multiple ownership rules by identifying those interests that have the potential to influence the licensee in core operating areas. such as programming. Comments are sought with respect to the current corporate stockholding attribution benchmarks, the single majority shareholder exemption, the nonattribution of nonvoting stock, and the treatment of limited partnership interests. Additionally, comment is sought on how to treat Limited Liability Companies and Registered Limited Liability Partnerships for attribution purposes. The attribution rules are a critical enforcement mechanism for the Commission as it applies its multiple ownership rules. Comments are also sought on the remaining aspects of the Commission's cross-interest policy and on what multiple ''cross-interests'' or otherwise nonattributable interests, when viewed in combination, raise diversity and competition concerns warranting regulatory oversight.

DATES: Comments are due by April 17, 1995, and reply comments are due by May 17, 1995.

ADDRESSES: Federal Communications Commission, Washington, D.C. 20554.

FOR FURTHER INFORMATION CONTACT: Mania K. Baghdadi, Mass Media Bureau, Policy and Rules Division (202) 418–2130, or Robert Kieschnick, Mass Media Bureau, Policy and Rules Division (202) 418–2170.

SUPPLEMENTARY INFORMATION: This is a synopsis of the Commission's Notice of Proposed Rule Making in MM Docket Nos. 94–150, 92–51, and 87–154, FCC 94–324, adopted December 15, 1994, and released January 12, 1995. The complete text of this NPRM is available for inspection and copying during normal business hours in the FCC Reference Center (Room 239), 1919 M Street, N.W., Washington, D.C., and also may be purchased from the Commission's copy contractor, International Transcription Service, (202) 857–3800, 2100 M Street, N.W., Suite 140, Washington, DC 20037.

Synopsis of Notice of Proposed Rule Making

1. This *NPRM* initiates a thorough review of the Commission's broadcast media attribution rules (found in 47 CFR 73.3555), which ''define what constitutes a 'cognizable interest' for the purpose of applying the multiple ownership rules to specific situations.'' [1]

The multiple ownership rules limit the number of broadcast stations that a single person or entity, directly or indirectly, is permitted to own, operate, or control, so as to foster programming diversity by encouraging diversity of ownership, and to assure competition in the provision of broadcast services.

2. The broadcast industry and other Commission rules have changed since these rules were last revised. For example, the multiple ownership rules themselves have been relaxed, and, concurrently with this decision, the Commission has adopted a Further Notice of Proposed Rule Making (Further Notice of Proposed Rule Making in MM Docket No. 91–221, FCC 94–322, adopted December 15, 1994), which seeks comments as to whether we should relax national and local multiple ownership limits for television stations, including the one-to-a-market rule. Also, in an additional separate proceeding published elsewhere in this edition of the **Federal Register**, the Commission is considering a variety of measures, including relaxing our attribution rules, to aid the entry of minorities and, if deemed necessary, women into broadcasting. The Commission wishes to ensure that the attribution rules remain effective in light of the previous and proposed relaxation of the multiple ownership rules.

3. Additionally, the Commission is concerned that certain nonattributable investments, while completely permissible, may permit a degree of influence that warrants their attribution for multiple ownership purposes. Moreover, the Commission is also concerned that otherwise permissible cooperative arrangements between broadcasters are being used in combination by those broadcasters to obtain, indirectly, controlling interests in multiple stations that they would be prohibited from holding directly under the multiple ownership rules. Further, this proceeding will consider how to treat, for attribution purposes, new business forms, such as Limited Liability Companies (LLCs). Finally, this review will ensure that any differences between the broadcast attribution rules and recently adopted or revised attribution rules for other regulated services are justified by other factors, such as differences between the media or our policies regulating them.

4. While the Commission's focus is on the issues of influence or control, at the same time, the attribution rules must be tailored to permit arrangements in which a particular ownership or positional interest involves minimal risk of influence, in order to avoid unduly restricting the means by which investment capital may be made available to the broadcast industry. The Commission intends to ensure that any revisions to the attribution rules meet these stated goals, are clear to broadcast regulatees, provide reasonable certainty and predictability to allow transactions to be planned, ensure case of processing, and provide for the

[1] *Report and Order* in MM Docket No. 83–46, 49 FR 19482, May 8, 1984 (*Attribution Order*), *On recon., Memorandum Opinion and Order* in MM Docket No. 83–46, 50 FR 27438, July 3, 1985 (*Attribution Reconsideration*), *on further recon., Memorandum Opinion and Order in MM Docket No. 83–46, 52 FR 01630, January 15, 1987 (Attribution Further Reconsideration*).

reporting of all the information necessary to make the Commission's public interest finding with respect to broadcast applications.

5. This NPRM also consolidates and comprehensively reexamines other pending proceedings that directly or indirectly implicate the attribution rules. Specifically, in 1992, in a Notice of Proposed Rule Making and Notice of Inquiry in MM Docket No. 92–51, 57 FR 14684, April 22, 1992, (''Capital Formation Notice''), comments were sought regarding whether the Commission should relax several of its attribution rules in a number of specific contexts in order to stimulate investment in the broadcast industry and to benefit new entrants, who have historically experienced significant difficulties in securing adequate startup funding. The Notice inquired as to whether the Commission should relax its attribution benchmarks for active and passive stockholders, and modify its insulation criteria as to widely-held limited partnerships, including business development companies organized as such. The Commission will incorporate the record from MM Docket No. 92–51 into the record of this proceeding to the extent that it is relevant to our consideration of the foregoing issues.[2]

6. The Commission will also consider in this proceeding the comments received in response to the Further Notice of Inquiry/Notice of Proposed Rule Making in MM Docket No. 87–154, 54 FR 10026, March 9, 1989 (''Cross-Interest Notice''), in which comment was sought on whether Commission should maintain its cross-interest policy in three areas—key employees, non-attributable equity interests, and joint ventures. In the Cross-Interest Notice, we also invited comment as to whether to amend the attribution rules to incorporate the key employee portion of the cross-interest policy. The Commission will incorporate the record from MM Docket No. 87–154 into the record of this proceeding.

7. The Commission notes that this proceeding is complementary with, and will affect our actions in, two rulemaking proceedings which appear elsewhere in this edition of the **Federal Register**. The first is a Further Notice of Proposed Rule Making in MM Docket No. 91–221, which concerns the multiple ownership rules for television stations. The second is a Notice of Proposed Rule Making in MM Docket Nos. 94–149 and 91–140, which seeks comment on a number of proposed rule changes and initiatives to provide minorities and women with greater opportunities to enter the mass media industry. Because the content of the attribution rules is critical to issues raised in both proceedings, the Commission will review the comments received in those proceedings in conjunction with the comments received in the instant proceeding to assure a coordinated approach to the three proceedings.

8. In this undertaking, we are guided by basic economic concepts as to the essential nature of firms, their control, and their conduct. Comment is invited on our analysis and parties are encouraged to support their views with relevant empirical analysis and business and economic theories. Commenters are also invited to propose alternative analytical frameworks for establishing the specific interests that should be deemed cognizable under our various multiple ownership rules. The Commission's analysis will focus essentially upon the effect that financial claims on, and associated voting or contractual rights in, broadcasting companies have on their conduct. The economic conduct of concern to us relates to a broadcasting company's programming choices, including affiliation choices, and competitive practices, including advertising pricing. To address these issues with a desirable degree of confidence, the Commission will need as much information as is available to establish the connections and thresholds of concern between financial claims on a firm and its conduct.

9. Accordingly, with respect to each specific ownership or relational interest discussed herein, the Commission seeks comment on whether the level or degree of ownership interest in, or relationship to, a licensee would be likely to impart the ability to influence or control the operations of the licensee, including core functions such as programming, such that the multiple ownership rules should be implicated. The Commission intends to base its judgment with respect to each specific attribution limit or criterion considered in this NPRM on as much empirical data as can be obtained, as well as economic and business theories on levels of influence in business organizations, as discussed above, and comments are specifically invited that contain such data and are grounded in rigorous economic theories and analyses. In setting a specific attribution limit or determining whether a particular interest should be cognizable or not, the Commission asks commenters to address the degree to which we should attempt to accommodate the competing concerns that have motivated us in the past, such as not inhibiting legitimate business opportunities and encouraging the flow of capital investment into the broadcast industry. An important consideration is the extent to which the Commission can and should accommodate these interests directly. In every case, if the new rule or exemption proposed represents a departure from the commission's current rules and standards, commenters should demonstrate the justification for such a departure. Additionally, in light of our desire to promote ownership opportunities for minorities and women in the broadcasting industry, the Commission invites comment on whether there are other attribution rules, besides those discussed in MM Docket Nos. 94–149 and 91–140, that should be adjusted to promote access to capital for minorities and women.

10. The Commission seeks empirical data and analysis that would indicate the ownership level that would likely impart to its holder some ability to influence the operation of a broadcast station in a manner that is intended to be limited by our multiple ownership rules. Also, the Commission seeks data and/or analysis, based on sound economic principles, to demonstrate that changing the attribution rules would have a significant effect on capital investment and new entry. The Commission also seeks detailed economic data regarding how the capital needs and outlays of broadcasters have changed since the current attribution rules were set, as well as since the earlier set of comments were submitted in response to the *Capital Formation Notice*, and any impediments to adequate financing imposed by the current rules.

11. The Commission is concerned that any action taken in this proceeding not inhibit capital investment nor disrupt existing financial arrangements, and we seek comment as to both of these areas with respect to our proposals herein. The Commission also seeks comment on whether, and, if so, to what extent, we should grandfather existing situations if any modifications we make to the attribution rules, for example, restricting the availability of the single majority shareholder exemption or attributing nonvoting stock, would result in a new attribution of ownership to an entity for a previously held interest, and that new attribution would result in a violation of the multiple ownership rules. Alternatively, should the Commission permit a transition period, during which

[2] The Capital Formation Notice also asked whether the Commission could, under the Communications Act, and should, for policy reasons, permit the holding of security and reversionary interests in licenses. That issue will be resolved in a separate proceeding.

licensees could come into compliance with the multiple ownership rules, as affected by any changes we make in the attribution rules?

12. The Commission recognizes that any specific benchmark or limit that is adopted will not include every influential interest that might be limited by the multiple ownership rules. A particular holding or interest not considered cognizable under our rules may, in the context of the structure of a particular business, including the relative distribution of ownership interests in that company, permit a degree of influence or control that should be regulated under the multiple ownership rules. On the other hand, a rule of general applicability drawn so strictly as to include every possible influential interest would ensnare innumerable interests that have no ability to impart influence or control over a licensee's core decision-making processes to their holders. Weighing these considerations, the Commission preliminarily concludes that our goals of predictability and certainty can best be achieved if we continue to use benchmarks and specific attribution limits rather than proceeding on an *ad hoc* basis. Of course, the Commission retains the discretion to treat specific factual situations on a case-by-case basis. Commenters may, of course, address these basic propositions.

Stockholding Benchmarks

13. In devising our attribution rules, the Commission proceeds on the basis of certain assumptions. As noted above, the attribution rules focus on the issues of influence on and control of a firm. Thus, this *NPRM* first concentrates on equity holders and addresses whether or not particular equity holdings have the potential to control or influence the firm and its activities.–

A. Voting Stock

14. The Commission now attributes ownership to holders of 5 percent or more of the voting shares of corporations. The Commission does not attribute the shares of nonvoting shareholders, regardless of the percentage of the equity of the corporation contributed by those shareholders or the percentage of the nonvoting shares that they hold. The current benchmarks were adopted in 1984. We selected the 5 percent benchmark because, according to our examination, a 5 percent shareholder in a widely-held corporation would typically be one of the two or three largest corporate shareholders and thus could potentially influence a licensee's management and operations. Further, this benchmark corresponds with Security and Exchange Commission regulations that require the reporting of ownership interests of 5 percent or greater.[3] We also concluded that adoption of a benchmark higher than 5 percent may result in many substantial and influential interests being overlooked and that the need to adopt a higher threshold was unclear since every demonstrable benefit to be derived from relaxing the attribution rules would be achievable in large measure from adopting a 5 percent benchmark.

15. In the *Capital Formation Notice*, the Commission proposed to increase the general attribution benchmark for voting stock from 5 percent to 10 percent in order to stimulate capital investment. The Commission asked commenters how we might preserve investment flexibility while adequately accounting for all influential interests that merit scrutiny under our rules. The record thus far does not contain information sufficient to justify raising the benchmark to 10 percent. Commenters addressing this issue unanimously supported raising the benchmark due to changes in the economic and competitive environment of the media marketplace since the mid 1980s, but they did not provide enough information on the changes in the economic climate and competitive marketplace to justify raising the benchmark or explain and verify the link between raising the attribution benchmark and precipitating additional capital investment.

16. While commenters argued that a less than ten percent stockholding is not, in itself, sufficient to presume that the holder could exert control or influence over the corporation, they do not explain the basis for that claim or provide any specific information that would allow us to devise a methodology to assume that such a stockholder would remain inactive in the affairs of the company in most or all cases. Moreover, comment is requested on whether such factors as the size, composition of management, and minority shareholder rights of individual corporations might not be increasingly relevant where larger nonattributable stockholdings are permitted. Therefore, commenters are asked to provide detailed illustrations of the role of minority shareholders in the management of a corporation. In addition, the Commission seeks more detailed information about the impact of minority shareholder rights on corporate management generally, particularly in those instances where individual minority shareholders might act in concert with others to affect the decision making of the corporate licensee or permittee.

17. With respect to the issue of facilitating increased capital investment, the Commission seeks answers to the following questions. Is there support for the assumption that an increased attribution benchmark will result in greater capital investment? If so, how would any increased availability of or reduced cost of capital resulting from an increased attribution benchmark be likely to be allocated between smaller, less established broadcasters and larger, more established ones? Should we be concerned that proportionately increasing the capital available to larger entities or reducing its cost to them might actually strengthen those licensees that already dominate the broadcast industry, thereby threatening competition and diversity? Analyses of these effects at several different hypothetical attribution benchmarks are requested.

18. *Commission Attribution Rules in Other Services.* The Commission seeks comment on the relevance of attribution rules applied in other FCC services. A critical matter on which we seek comment is whether and how a change in the Commission's broadcast attribution benchmark would affect the many services that rely on it. The Commission invites comment on the relevance of the attribution criteria for other services detailed in paragraphs 26–36 in the full text of this *NPRM*, as well as on others not discussed therein, to our consideration of the broadcast attribution rules. Does broadcasting have unique factors that make comparison with other Commission services inapposite, or, to the contrary, should we consider our action in other services as precedential? Is broadcasting sufficiently different from these other services in nature, function of the service or otherwise so as to justify any differences? Or, are the purposes of the broadcasting attribution and multiple ownership rules sufficiently distinct so as to justify any differences between those rules and those of the other Commission services?

19. *Other Agency Benchmarks.* In addition to taking note of the attribution rules used in other Commission services, the Commission also seeks comment as to regulatory benchmarks used by other federal agencies, including those discussed in the full text of this *NPRM* and other standards that commenters may bring to our attention. The strength of the analogy to

[3] Securities and Exchange Act Section 13(d), 15 U.S.C. 78m(d).

other benchmarks will, of course, depend on whether the purpose of the particular benchmark in question parallels the Commission's objective in identifying ownership interests that confer on their holders the ability to influence the day-to-day operations of a licensee, and commenters should address, in detail, why a particular agency's benchmark may or may not be applicable, by analogy, to our analysis. The Commission is particularly interested in whether the purposes underlying other regulatory benchmarks are comparable to our competition and diversity concerns, and why that agency believed the percentage it selected reflects a substantial enough interest to constitute the level of influence or control that implicates its underlying ownership limitation, and, in particular, whether is analytical methodology would be applicable to our rules.

20. The Commission seeks comment on how to devise rules that are consistent with the administrative concerns expressed in our section devoted to our underlying principles, and that would accommodate the principles as discussed in the full text of his *NPRM.* Should there be an exemption, similar to the single majority stockholder exemption, for stockholders in firms where management holds some threshold level of stock, on the ground that the inherent control afforded managers would preclude significant influence by other stockholders? Can the Commission's stockholding benchmarks rely on, or take cognizance of, the size of a stockholding relative to others in the firm?

B. Voting Stock: Passive Investors

21. In the *Attribution Order,* the Commission adopted a 10 percent attribution benchmark for certain institutional investors (bank trust departments, insurance companies, and mutual funds) that we deemed to be ''passive'' in nature in order to ''increase the investment flexibility of these entities and, in so doing, expand the availability of capital to the broadcast and cable industries without significant risk of attribution errors.'' The *Capital Formation Notice* proposed increasing the passive investor benchmark from 10 percent to 20 percent. The commenters who addressed this issue unanimously supported increasing the voting stock attribution level for passive investors, but provided no basis on which to conclude such a change is appropriate. Commenters are invited to delineate what specific assurances we would have that passive investors that hold large stock interests cannot or would not exert influence or control over broadcast licensees and that raising the benchmark would therefore not exclude from attribution holders of interests that have a significant and realistic potential to influence station operations. Are there common factors, intrinsic to all passive investors, or institutional or other safeguards that could provide such assurance? Moreover, the comments do not, in the Commission's view, dispose of the Commission's concern regarding the impact on corporate decision-making that could result, even unintentionally, by the trading and voting of large blocks of stock of assertedly passive investors. Commenters are asked to address the foundations of the Commission's concern about the possible effect of large stock trades and whether there have, in fact, been any stock transactions of this nature. If so, how substantial have such stock transactions been, and do the costs of the exclusion of such interests from attribution outweigh any potential benefits that might be realized from an increased attribution benchmark?

22. The Commission seeks additional analysis on the degree of increased investment that would likely stem from any adjustment of our rules and on the need for such increased investment. Additionally, the commenting parties did not adequately address the Commission's concerns that any increase in these attribution levels not implicate our concerns about the potential for influence. Finally, if the benchmark for all investors is raised to 10 percent, does that reduce any need there might be to facilitate broadcast investment by increasing the passive investor benchmark?

23. Several commenters raised a closely related issue not discussed in our *Capital Formation Notice.* They requested that the Commission further expand the passive investor class to include other institutional investors, such as pension funds, investment and commercial banks, and certain investment advisors. The Commission does not intend to revisit its decision of 1984 in order to broaden the category of passive investors to include such entities. However, commenters are invited to argue why this tentative conclusion is incorrect. Similarly, the Commission is not prepared to expand the category of passive investors to include Small Business Investment Companies (''SBICs'') and Specialized Small Business Investment Companies (''SSBICs''), formerly known as Minority Enterprise Small Business Investment Companies (''MESBICs''), as proposed in the *Capital Formation Notice.* The Commission has received no evidence in the comments made thus far to alter our first conclusion that these entities do not meet our definition of ''passive.'' In the above cited *NPRM* in MM Docket Nos. 94–149 and 92–140, adopted simultaneously with this *NPRM*, the Commission is, however, considering other rule changes to facilitate capital investment and entry by minorities and women without broadening our definition of ''passive'' investors.

C. Minority Stockholdings in Corporations With a Single Minority Shareholder

24. Minority voting stock interests held in a corporate licensee are not attributable if there is a single majority shareholder of more than 50 percent of the corporate licensee's outstanding voting stock. The Commission invites comment as to whether we should restrict the availability of this exemption. The Commission is concerned that this exemption not be used to evade the multiple ownership limits and that our previous conclusion that a minority stockholder could not exert significant influence on a licensee where there is a single majority stockholder may not be a valid conclusion in all circumstances. For example, if the minority voting stockholder has contributed a significant proportion of the equity, holds 49 percent of the voting stock, and combines that holding with a large proportion of the nonvoting shares or debt financing, would that minority shareholder have the potential to influence the licensee such that the multiple ownership rules would be implicated? The Commission invites comment on how we should approach our concerns in this area. Should the availability of the exemption be restricted? If so, should the Commission do so on a case-by-case basis or restrict it in specified circumstances?

D. Non-Voting Stock

25. Under the Commission's attribution rules, all non-voting stock interests (including most preferred stock classes) are generally nonattributable. The Commission solicits comment on whether to amend the attribution rules to consider nonvoting shares as attributable, at least in certain circumstances. The Commission is concerned, for example, that a nonvoting shareholder who has contributed a large part or all of the equity of a corporate licensee may carry appreciable influence that is not now attributed. If the Commission decides to attribute nonvoting shares, should we do so only where substantial equity holdings are held in combination with

other rights, such as some voting shares or contractual relationships? If the Commission decides to attribute nonvoting shares without reference to the existence of other contractual relationships, should we adopt a separate benchmark at the same level as we apply either to voting shares or to ''passive'' investors? The Commission tentatively believes that we should, if we decide to attribute nonvoting shares, adopt a benchmark at least as high as that applied to ''passive investors'' since there is a common assumption of less potential for influence or control in both instances.

Partnership Interests

26. The Commission generally attributes all partnership interests, except for sufficiently insulated limited partnership interests, regardless of the degree of equity holding. There is no apparent controversy regarding the rule to attribute all general partnership interests, and the Commission does not intend to revisit this rule. The Commission currently exempts from attribution those limited partners that are sufficiently insulated from ''material involvement,'' directly or indirectly, in the management or operation of the partnership's media related activities, upon a certification by the licensee that the limited partners comply with specified insulation criteria. Limited partnership interests that are not insulated are attributable, regardless of the amount of equity held. The Commission seeks comment on the effectiveness of the current insulation criteria for limited partnership interests. Are additional insulation criteria necessary to assure that the goals of the attribution rules are achieved? Or, to the contrary, should the insulation criteria be relaxed to any degree, at least in certain circumstances, to attract increased capital investment or encourage new entry, and can this be done without implicating the purposes of the multiple ownership rules to encourage diversity and competition?

27. *Business Development Companies and Other Widely-Held Limited Partnerships.* The *Capital Formation Notice* proposed to relax insulation criteria with respect to business development companies organized as limited partnerships so as to eliminate, as much as possible, the current conflict with state and federal securities laws. Alternatively, the *Capital Formation Notice* asked whether the Commission should combine an equity ownership standard specific to these partnerships with a more limited relaxation of specific insulation requirements. The *Capital Formation Notice* also solicited comments on whether the Commission should modify the insulation criteria applicable to all ''widely-held'' limited partnerships to recognize insulation where limited partners hold an insignificant percentage of the total interests in the partnership. The Commission asked whether a 5 percent or other ownership benchmark would be appropriate in certain circumstances.

28. The Commission seeks additional comments in this area. In particular, we would like updated information and additional empirical information on the growth and prevalence of business development companies and widely-held limited partnerships as investment vehicles generally, as well as applied to the broadcast industry in particular, including the percentage of equity typically represented by their investment. In this regard, it will be helpful for commenters to discuss with specificity the operation of business development corporations and widely-held limited partnerships and whether the existing insulation criteria have hindered capital flow from these entities to licensees.

29. The Commission asks parties to address the standards that could be used to define widely-held limited partnerships eligible for application of any revised insulation criteria. Comment is particularly sought on whether there is anything inherent in the nature of state or federal regulation of business development companies that would insure that they remain widely held and whether such a guarantee, if it exists, is an adequate substitute for any of our current insulation criteria. Parties may also wish to offer additional suggestions for defining widely-held limited partnerships that reflect our concerns that such entities be used exclusively for investment purposes.

30. Additional information is sought, supported by empirical data, on whether the Commission should revise our decision, on reconsideration of the *Attribution Order*, not to adopt an equity benchmark for noninsulated limited partnerships. In that decision, the Commission decided to apply insulation criteria to limited partnerships, instead of applying an equity benchmark. The Commission is not inclined to change this approach based on the record compiled thus far. If parties disagree with this conclusion, they must provide us with more data and analysis to demonstrate that our earlier decision is no longer valid or effective.

31. In this respect, the Commission seeks information on the financial and legal structures of limited partnerships to enable us to determine whether there is a uniform equity level below which the Commission need not be as concerned or need not be concerned at all with the application of the insulation criteria. Should equity share be defined by the amount of cash contribution, the share of proceeds, or rights on dissolution? How would the Commission evaluate contributions in the form of services? If the power of a limited partner is not related to his proportional partnership share (which is the premise of the current rules), is there a partnership size that would obviate the power of any one partner, such that ownership should not be attributed to any partner, regardless of his share? The Commission also asks whether other state and federal regulations might provide guidance in this area, and/or the extent that such regulations might provide sufficient protection so as to make additional Commission regulations. In this regard, the Commission requests estimates, supported by economic or other studies that provide their basis, of how much additional capital might be made more readily or cheaply available to the broadcast industry by adoption of any of these approaches, as well as how such capital is likely to be distributed.

Limited Liability Companies and Other New Business Forms

32. The Commission also seeks comment as to how we should treat, for attribution purposes, the equity interest of a member in a limited liability company or LLC, a relatively new form of business association permitted and regulated by statute in at least 45 states. The Commission has recently received TV and radio assignment applications where parties have argued that we should exempt certain owners of an LLC from attribution, either because they should be treated as nonvoting shareholders or because they should be treated as fully-insulated limited partners. So that processing of pending applications is not indefinitely delayed, the Commission plans to process them on a case-by-case basis until this rule making is completed, using the tentative proposal delineated above as our interim policy, including the special exception for minorities discussed therein.

33. Comment is solicited as to how the Commission should treat LLCs, Registered Limited Liability Partnerships (''RLLPs''), and other new business forms as well as any other new business forms, that may arise in the future for attribution purposes. Any approach the Commission takes with respect to LLCs and similar hybrid entities must ensure that exemption

from attribution is granted only where there are sufficient assurances that the exempted owner is adequately insulated from control of the entity. In addressing the attribution of LLCs, the Commission hopes to delineate the principles to be applied and express them in general terms that can be applied to new business forms that appear in the future. The Commission invites comment as to the form and content of any general principles that may be distilled from our analysis of attribution of LLCs. The Commission also invites comment as to the advantages of LLCs, in general, and also, in particular, the impact on minority and female ownership opportunities.

34. The Commission tentatively proposes to treat LLCs and RLLPs as we now treat limited partnerships. Membership in an LLC or RLLP would be treated as a cognizable interest for multiple ownership purposes unless the applicant certifies that the member is not materially involved, directly or indirectly, in the management or operation of the media-related activities of the LLC or RLLP. The Commission proposes that such certification be based on the criteria specified in our *Attribution Reconsideration* and *Attribution Further Reconsideration*. Comment is invited on whether the insulating criteria developed with respect to limited partnerships are sufficient to insulate members of LLCs and RLLPs or whether other criteria would be more effective. The Commission notes, however, that applying limited partnership attribution criteria to LLCs would result in attributing all investors that may provide programming or other services to the LLC. In this regard, the Commission's recent experience suggests that such arrangements have been central to proposals that might significantly advance minority ownership of broadcast facilities. Accordingly, the Commission seeks comment on whether to provide an exception to our tentative proposal, on a case-by-case basis, where doing so would advance our policy of enhancing opportunities for broadcast station ownership by minorities.

35. The Commission is not inclined to treat LLCs as we currently treat corporations, exempting from attribution the interests of ''nonvoting'' shareholders without regard to the presence or absence of insulating provisions in an operating agreement. If, however, commenters raise significant policy reasons why the Commission should alter this interim view, we will consider those reasons. The Commission also invites comment as to what approaches should be taken to LLCs and RLLPs should we neither adopt the equity benchmark for partnerships nor retain the existing attribution standards. The Commission also requests comment on whether there are differences between LLCs and/or RLLPs and limited partnerships such that we should not treat the former entities as we treat limited partnerships.

36. The Commission invites comment on whether, if the certification approach with respect to LLCs is adopted, we should also require parties to file copies of the organizational filings and/or operating agreements with the Commission when an application is filed. If so, what, if any, confidentiality concerns exist, and how should they be addressed? If the Commission adopts, as our attribution standard, an ownership benchmark applicable to limited partnerships, comment is invited on whether it would be appropriate to apply that benchmark to LLCs and RLLPs as well.

37. If the Commission relaxes insulation standards for widely-held limited partnerships, should we apply these changes to LLCs and RLLPs? The Commission invites comment as to whether to take a uniform approach to widely-held LLCs, RLLPs, and ''business development companies.'' Do these entities have similarities in organization and/or function that would mandate such similar treatment or are there significant distinctions? Alternatively, do the policy goals discussed in the *Capital Formation Notice* apply with respect to LLCs and RLLPs so as to justify such a similar approach? If a uniform approach is warranted, what should that approach be?

38. Should the Commission treat all LLCs the same or differentiate those with centralized management from those with decentralized management? In LLCs where all management authority has been vested in nonmembers who are selected by the members, should the managers be treated, for attribution purposes, as equivalent to officers and/or directors of a corporation? Should the Commission adopt an approach of exempting from attribution members with limited equity interests, regardless of lack of compliance with insulating criteria? For attribution purposes, should the percentage of ''ownership'' be determined by voting rights among the members, the share divisions designated by the parties, the extent of capital contribution, or by some other measure? Under the commission's current attribution rules, we do not distinguish among partners based on the amount of equity they contribute or their share division. If the determination is made based on capital contribution, what should be done about members whose contribution is in services? How should the Commission treat LLCs in multi-tiered vertical organizational chains? Should multipliers be applied, and, if so, under what circumstances?

The Cross-Interest Policy and Multiple Business Interrelationships

39. The Commission also incorporates in this proceeding the pending issues raised in the *Cross-Interest Notice* with respect to the remaining aspects of the Commission's cross-interest policy. The Commission also seeks comment regarding the appropriate treatment of nonequity financial interests and multiple business interrelationships between licensees, in light of the fundamental economic principle that the conduct and control of business organizations may at times be influenced by nonequity interests.

A. The Cross-Interest Policy

40. *Background*. In 1989, the Commission issued a *Policy Statement* (54 FR 09999, March 9, 1989) limiting the scope of the cross-interest policy so that it would no longer apply to consulting positions, time brokerage arrangements and advertising agency representative relationships. At the same time, however, the *Cross-Interest Notice* was issued to seek further comment concerning key employees, nonattributable equity interests, and joint ventures. The Commission solicited comment on whether retention of the remaining cross-interest policies was necessary to prevent anticompetitive practices, whether alternative deterrent mechanisms exist to assure competition and diversity, and whether continued regulation of relationships not specifically addressed by the Commission's attribution rules is necessary. The Commission also questioned whether regulatory oversight of one or more of these interests should be limited to geographic markets with relatively few media outlets. Only five comments and reply comments were filed in response to the *Cross Interest Notice*, and almost all urged the Commission to eliminate these restrictions.

41. *Discussion*. The commenters supporting the elimination of the remaining aspects of the cross-interest policy put forth four general arguments: (1) The cross-interests that implicate diversity and competition concerns are now covered by our multiple ownership rules; (2) The video entertainment marketplace has become increasingly

competitive, thus diminishing the need for regulatory oversight of cross-interests; (3) alternative remedies, such as the antitrust laws and internal conflict of interest policies, will serve to deter abuses stemming from cross-interests; and (4) The cross-interest policy imposes significant burdens in terms of administrative costs and uncertainty, chilling investment in the broadcast industry. The Commission believes each of these arguments has merit, and continues to question the continuing need for our cross-interest policy in its present form. The Commission also strives to clarify aspects of the policy that may warrant continued enforcement.

42. For a number of reasons, however, the Commission believes it necessary to develop a more complete and updated record in our review of the cross-interest policy as applied to key employees, joint ventures, and nonattributable equity interests. It is necessary as a general matter to update the record to ensure that changes in interrelated policies are coordinated. Further, comment is also requested regarding whether multiple cross interests and business relationships between stations, when viewed in combination, raise diversity and competition concerns, an issue that the commenters did not address.

43. On a more specific level, the Commission also seeks comment regarding a number of issues either not addressed in the comments or raised by the comments themselves. First, a number of parties argued that the Commission's ownership and attribution rules have supplanted the remaining aspects of the cross-interest policy that implicate diversity and competition concerns. It is true that the Commission's attribution rules have evolved to the point where they now apply to a number of interests formerly covered only by the cross-interest policy. The Commission seeks comment, however, on whether this argument is undermined by the proposed changes to our attribution rules. There remains the question of whether particular situations warrant case-by-case review to determine whether a cross-interest poses diversity and competition concerns. The Commission requests commenters to be specific in defining the particular situations and harms they may believe require continued application of the cross-interest policy.

44. The Commission also seeks further comment on the argument that the increased competition facing broadcasters eliminates the need for the cross-interest policy. We seek comment on whether there are smaller markets with an insufficient number of media outlets to assume that competition will deter the abuses our cross-interest policy seeks to prevent. If parties believe this to be the case, they should define the size and nature of the markets that raise such concerns.

45. Commenters favoring the elimination of the remaining aspects of the cross-interest policy point to the burdens and uncertainty it creates. Parties should submit, if possible, evidence to support the assertion that the cross-interest policy has impeded the ability of broadcasters to raise capital. Comment is also sought regarding the extent, if any, of a shortage of key employees, especially in smaller markets, that may be exacerbated by the Commission's cross-interest policy.

46. In addition, commenters raised several questions regarding the alternative remedies that other parties maintain lessen the need for the remaining aspects of our cross-interest policy. How common, and how effective, are the internal conflict of interest policies cited by parties as providing a means to deter abuses stemming from key employee cross-interests? While the antitrust laws deter anticompetitive conduct, do they address the diversity concerns behind the cross-interest policy? The Commission seeks comment as to these questions and more generally as to the effectiveness of these alternative remedies.

47. Finally, no comment was received on ways to clarify and possibly narrow the cross-interest policy in the event the Commission determines that continued enforcement is appropriate. The Commission now seeks specific suggestions as to how the cross-interest policy might be clarified. The Commission also seeks comment on the following means of narrowing the policy: (1) Should we limit the application of the cross-interest policy to smaller markets where competition and diversity are of particular concern, and, if so, how should we define these markets? (2) Should we enforce the cross-interest policy only where the cross-interest, if attributable under our attributable rules, would violate the ownership rules? (3) With respect to nonattributable equity interests, should we limit review only to those interests reaching a certain level of ownership, or when those interests exceed or reach a certain percentage of the licensee's voting equity?

B. Non-Equity Financial Relationships and Multiple Business Interrelationships

48. In our review of the cross-interest policy, the Commission has focused on each cross-interest individually. But broadcasters in particular markets may also at times enter into a number of different business relationships between themselves. While the Commission recognizes the important role cooperative arrangements can play, we seek comment as to whether multiple ''cross-interests'' or otherwise nonattributable interests, when viewed in combination, raise diversity and competition concerns warranting regulatory oversight. The nature of broadcaster interrelationships can vary widely, and can include nonattributable interests, contractual relationships, family relationships in conjunction with other interests, and joint arrangements among stations, including time brokerage agreements (also referred to as local marketing agreements or LMAs) and joint sales arrangements. Many of these business interrelationships serve legitimate purposes and, indeed, have been encouraged by the Commission. The Commission seeks comment as to whether ostensibly separately owned stations could so merge their operations, through a variety of joint enterprises or cooperative agreements, perhaps in conjunction with other nonattributable interests, and thereby create such close business interrelationships as to implicate our diversity and competition concerns.

49. In 1984, the Commission decided to exclude debt from attribution on the supposition that attributing debt would severely restrict capital sources for broadcasters, and because debt financing was the least likely of all financing sources to involve an interest that implicates the multiple ownership rules. The Commission believes, at this point, that we should continue to exclude such relationships, standing alone, from attribution under the multiple ownership rules because any other approach would severely impair the ability of the broadcasting industry to obtain necessary capital. The Commission would neither wish to inhibit such a key means of obtaining capital nor to disrupt existing expectations and relationships to such a degree. If any commenters disagree with this conclusion, the Commission invites them to demonstrate that the benefits of extending our attribution rules to debt and other similar contractual relationships outweigh the significant drawbacks. At the same time, there may be circumstances where debtholding, accompanied by a number of other close

business interconnections, should be considered to be attributable. Comment is requested regarding the potential for debt or other nonattributable interest, in conjunction with a series of cooperative or contractual arrangements, to provide their holders the ability to influence the day-to-day operations of a licensee, thus implicating our competition and diversity concerns.

50. Any regulation of such interrelationships among broadcasters, given their varying forms, would require case-by-case review in the context of applications for new stations of transfer or assignment applications. The Commission seeks comment as to whether the burdens and uncertainty created by such review would be outweighed by the perceived benefits of addressing the concerns in this area, and whether these concerns are best addressed in the context of our real-party-in-interest rules and *de facto* transfer of control challenges. The Commission also seeks comment as to whether any review of such close business interrelationships should be limited to those markets where the lack of competition and diversity is a particular concern, and how such markets should be defined. In addition, should the Commission focus on combinations of business interrelationships among stations in the same market only, or do inter-market relationships among stations also warrant review? The Commission wishes to emphasize that in considering these issues we are sensitive to the need not to inhibit capital flow into the broadcast industry or unduly disrupt existing financial arrangements.

Administrative Matters

51. Pursuant to applicable procedures set forth in §§ 1.415 and 1.419 of the Commission's Rules, 47 CFR 1.415 and 1.419, interested parties may file comments on or before April 17, 1995, and reply comments on or before May 17, 1995. All relevant and timely comments will be considered by the Commission before final action is taken in this proceeding. To file formally in this proceeding, you must file an original plus four copies of all comments, reply comments, and supporting comments. If you want each Commissioner to receive a personal copy of your comments, you must file an original plus nine copies. You should send comments and reply comments to Office of the Secretary, Federal Communications Commission, Washington, D.C. 20554. Comments and reply comments will be available for public inspection during regular business hours in the FCC Reference Center (Room 239), 1919 M Street, N.W., Washington D.C. 20554.

52. This is a non-restricted notice and comment rulemaking proceeding. *Ex parte* presentations are permitted, except during the Sunshine Agenda period, provided they are disclosed as provided in the Commission Rules. *See generally* 47 CFR 1.1202, 1.1203, and 1.1206(a).

Initial Regulatory Flexibility Analysis

53. *Reason for the Action:* This proceeding was initiated to obtain comment on whether the Commission's broadcast attribution rules continue to be effective in serving their intended goals, and on whether they should be revised in certain areas to more effectively achieve those goals.

54. Objective of this Action: The actions proposed in the *Notice* are intended to assure that the Commission's broadcast attribution rules effectively implement the Commission's broadcast multiple ownership rules by identifying those interest that have the potential to influence the licensee in core operating areas, such as programming.

55. *Legal Basis:* Authority for the actions proposed in this *Notice* May be found in Sections 4,303, and 310 of the Communications Act of 1934, as amended, 47 U.S.C. §§ 154,303,310.

56. *Reporting, Recordkeeping and Other Compliance Requirements Inherent in the Proposed Rule:* If the attribution rules are changed, the Commission would have to change the reporting requirements in the Commission's annual ownership report form, accordingly, as the attribution rules determine which broadcast interests must be reported to the Commission and are counted for multiple ownership purposes.

57. *Federal Rules Which Overlap, Duplicate or Conflict with the Proposed Rule:* None.

58. *Description, Potential Impact and Number of Small Entities Involved:* Approximately 11,000 existing television and radio broadcasters of all sizes may be affected by the proposals contained in this decision. After evaluating the comments in this proceeding, the Commission will further examine the impact of any rule changes on small entities and set forth our findings in the Final Regulatory Flexibility Analysis.

59. *Any Significant Alternatives Minimizing the Impact on Small Entities and Consistent with the Stated Objectives:* The Notice solicits comments on a variety of alternatives.

60. As required by Section 603 of the Regulatory Flexibility Act, the Commission has prepared an Initial Regulatory Flexibility Analysis (IRFA) of the expected impact on small entities of the proposals suggested in this document. Written public comments are requested on the IRFA. These comments must be filed in accordance with the same filing deadlines as comments on the rest of the Notice, but they must have a separate and distinct heading designating them as responses to the Regulatory Flexibility Analysis. The Secretary shall send a copy of the Notice of Proposed Rule Making, including the IRFA to the Chief Counsel for Advocacy of the Small Business Administration in accordance with paragraph 603(a) of the Regulatory Flexibility Act (Pub. L. 96–354, 94 Stat. 1164, 5 U.S.C. 601 *et. seq.* (1981)).

List of Subjects in 47 CFR Part 73

Radio broadcasting, Television broadcasting.

Federal Communications Commission.

LaVera F. Marshall,

Acting Secretary.

[FR Doc. 95–2545 Filed 2–1–95; 8:45 am]

BILLING CODE 6712–01–M

---

47 CFR Part 73

[MM Docket Nos. 87–8 and 91–221; FCC 94–322]

Broadcast Services; Television Stations

AGENCY: Federal Communications Commission.

ACTION: Further notice of proposed rulemaking.

SUMMARY: The Commission proposes a new analytical framework in which to evaluate its television ownership rules. This framework provides a more structured approach to a comprehensive economic and diversity analysis of the rules. This Further Notice of Proposed Rule Making (*FNPRM*) is issued in order to allow compilation of a comprehensive record, using this new framework, which would enable the Commission to make a fully informed decision in this important area.

DATES: Comments are due by April 17, 1995, and reply comments are due by May 17, 1995.

ADDRESSES: Federal Communications Commission, Washington, D.C. 20554.

FOR FURTHER INFORMATION CONTACT: Roger Holberg, Mass Media Bureau, Policy and Rules Division, (202) 418–2130 or Robert Kieschnick, Mass Media Bureau, Policy and Rules Division, (202) 418–2170.

SUPPLEMENTARY INFORMATION: This is a synopsis of the Commission's Further Notice of Proposed Rule Making in MM Docket Nos. 87–8 and 91–221, FCC 94–322, adopted December 15, 1994, and released January 17, 1995. The complete text of this FNPRM is available for inspection and copying during normal business hours in the FCC Reference Center (Room 239), 1919 M Street, N.W. Washington, D.C., and also may be purchased from the Commission's copy contractor, International Transcription Service, (202) 857–3800, 2100 M Street, N.W., Suite 140, Washington, DC 20037.

Synopsis of Further Notice of Proposed Rule Making

1. This FNPRM proposes a new analytical framework within which to evaluate our ownership rules applied to television stations. This new framework provides a more structured approach to economic and diversity analyses of the rules. While the Commission found the comments received in response to the Notice of Inquiry (56 FR 40847, August 16, 1991) and Notice of Proposed Rule Making (*NPRM*) (57 FR 28163, June 24, 1992) in this proceeding useful, we believe that the issuance of this FNPRM is necessary to permit compilation of a record based upon this new framework which will enable us to make a fully informed decision in this important area. Additionally, the Commission solicits further comments in MM Docket No. 87–8, Television Satellite Stations, on the treatment of satellite television stations under our ownership rules.

2. This review of the television ownership rules originated as a result of a 1991 report developed by the Commission's Office of Plans and Policy, which found that the market for video programming had undergone tremendous changes over the previous fifteen years, and that new competition to ''traditional'' broadcast services had affected the ability of broadcast services to contribute to a diverse and competitive video programming marketplace. The Notice of Inquiry initiating this proceeding thus solicited comment on whether the Commission's existing ownership rules and related policies should be revised to enable television licensees to be more responsive in meeting this competition. The subsequent Notice of Proposed Rule Making was issued to consider changes to several long-standing structural rules governing the television industry, including the rules limiting the ownership interests that a person or entity may have in television stations on both the national and local level. The Commission also solicited comment on certain rules governing the relationship between a network and its affiliates.

3. This FNPRM considers the effects of several major developments since the 1992 NPRM that have altered the telecommunications landscape and accentuated the need to further explore the desirability of modifying the TV ownership rules. In particular, the Commission has re-regulated cable television pursuant to Congressional mandate, leading to rate reductions and raising the prospect of increased cable penetration. DBS and wireless cable (MMDS) are becoming increasingly important players in the video marketplace, and some telephone companies may soon begin to provide video dialtone service. These developments increase the number of competitors broadcast TV stations face and thus may justify loosening the restrictions on broadcast television station ownership. Thus the Commission wishes to analyze the extent to which our TV ownership rules should explicitly account for these competing media. Finally, in 1992, the Commission adopted a regulatory scheme, recently reaffirmed and clarified, governing LMA rules for radio and wishes to consider whether similar rules should be adopted for TV.

I. Competitive Analysis of Television Broadcasting

Framework for Competitive Analysis

4. The purpose of competitive analysis is to describe the markets at issue in light of established economic theory and legal precedent to determine how the current market structure and regulatory schemes affect competition and consumer welfare. The Commission's competitive analysis of the rules at issue in this proceeding focuses upon whether and to what extent market power exists and is being exercised, and what effect these rules have on the existence and exercise of this market power. This analysis requires two steps: (1) Definition of the relevant product markets, and (2) examination of these markets' structure for evidence of the existence and exercise of market power. A standard method to define the product market within which a particular firm operates is to ask the question: If this firm raised the price of its produce, to what degree would consumers continue to purchase that product or turn to the products of other firms, and what are these other products and other firms? After this set of relevant products is determined, the geographic extent of the market is outlined. In general, the geographic market refers to the area where buyers of the particular product can practicably turn for alternative sources of supply, or the area in which sellers sell this product. A useful technique in determining the geographic extent of the market is to examine the geographic region where buyers would buy and where sellers would sell in response to a ''small but significant and nontransitory'' price increase by any firm in that market. No single geographic market definition is likely to be decisive for all purposes in examining a particular industry.

5. Once reasonably interchangeable substitutes are identified and the geographic extent of the market is delineated, the participants in the relevant product market can be identified. This identification allows market shares to be calculated to characterize the market's structure and its concentration. Such calculations are useful as one component of a competitive analysis of potential market power. As with many other human activities, a firm's possession and use of market power is a matter of degree. The potential for the exercise of market power is limited by the degree to which its consumers can turn to substitutes, the competition offered by its existing competitors, the potential competition offered by new entrants, and the degree to which its suppliers can sell their product to other firms. If the relevant product markets are properly defined, the ability of consumers to turn to substitute products offered by other firms will already be reflected in their definition. Market share and concentration can only be reasonable proxies to estimate market power if the market is properly defined.

6. Market power cannot be adequately assessed by mere reference to market shares, however, because other factors, such as barriers to entry, can influence the degree to which market share conveys market power. As a result, in addition to market concentration, the conditions of entry in each market must be examined to determine whether the exercise of market power is possible.

Television Broadcasting's Relevant Markets

7. With the above principles in mind, the Commission turns to an identification of the product markets influenced by the rules under consideration. We find that TV broadcasters operate in three economic markets relevant to the rules under consideration: (1) The market for delivered video programming; (2) the advertising market, and (3) the video program production market. For each of these markets, we need to identify what

products are relevant substitutes for one another, who are suppliers of these products, what is the geographic scope of the relevant market, and how to measure market share for the different suppliers. It is these questions to which we now turn for each of television broadcasting's relevant markets.

The Delivered Video Programming Market

8. *Delineation of Relevant Substitute Products and Suppliers.* To identify the relevant substitutes to delivered video programming, it must be recognized that Americans can spend their leisure time doing other activities. The stability of Americans' use of television as a leisure activity suggests that video programming seen on television may be a sufficiently different economic product from other entertainment so that it should be treated as a separate product market. However, parties are requested to comment on this view and supply data and/or analysis which demonstrates the economic relevance of their proposed substitutes for delivered video programming.

9. Turning to an identification of economically relevant suppliers, the Commission is confronted by a more difficult demarcation of this market. Public broadcast station operators clearly compete with commercial broadcast television operators for viewer attention. Cable system operators also compete with broadcast television stations and have grown in importance as a group of suppliers of delivered video programming. The number of cable video networks and the channel capacity of cable systems continue to grow dramatically. However, the Commission notes that more than half of all viewing hours in cable households during the 1992–93 season were of retransmitted broadcast signals. In addition, more than one-third of all households that could subscribe to cable elect not to do so. Because some consumers choose not to purchase cable service, the degree to which cable TV channels are substitutes for broadcast television channels is an issue on which the Commission requests specific comment.

10. In addition to cable, there are now several emerging for-subscription multichannel providers of video programming, such as home satellite dish service, wireless cable service, and direct broadcast satellite service, which may compete with broadcasters in the same manner as cable. While all the above listed alternative suppliers currently provide some amount of delivered video programming, we will tentatively conclude, for purposes of this FNPRM, commercial broadcast television operators, public broadcast television station operators, and cable system operators to be economically relevant alternative suppliers of delivered video programming. While the Commission wishes to tentatively include some of the other suppliers (*e.g.*, MMDS, DBS, VDT, etc.) in our demarcation at this time, we concede that it may not be appropriate to include them because their current market penetration is so low that they are not relevant substitutes to a majority of Americans. However, this situation may rapidly change and we solicit comment on these tentative conclusions. Finally, while VCRs are present in a large number of television households, they do not provide a complete schedule of video programming and so are treated as sufficiently different as to suggest that perhaps they should not be included at this time. However, commenters are asked to provide information on the degree of economic substitutability of all internatives considered above to a broadcast TV station's video programming. In submitting comments, commenters should provide evidence on the extent to which these are economically relevant substitutes as demonstrated by their cross-price elasticities of demand and supply.

11. *Delineation of the Market's Geographic Scope.* Because commercial broadcast television stations have a limited signal range, it appears that, from these operators' perspective, the ''area of effective competition'' is geographically limited. This suggests that commercial broadcast television operators compete in a ''local'' market for delivered programming. However, the alternative suppliers that might be included in the product market have different service areas. Therefore, we recognize that as competition and technology change the geographic reach of the relevant competitors, our notions of the geographic scope of the market for delivered video programming may change.

12. Earlier comments suggested several alternatives for defining the boundaries of the ''local'' market for delivered video programming. While in the past, the Commission has used the Grade B contour to define a local market, comments previously submitted in this proceeding tended to suggest the use of either a smaller geographic area definition (the Grade A contour) or a larger geographic area definition (the DMA). The Commission proposes to continue to rely on a contour overlap standard but will consider the DMA definition of ''local'' for determination of the relevant geographic dimensions of the market for delivered programming. However, further comment is sought on the use of the DMA definition of the geographic scope of these markets. Are DMAs equally applicable for alternative distributors such as cable? Are they too large?

13. *Delineation of Market Power Measurement.* To determine whether market power exists, the Commission must also determine how to measure market concentration within the local delivered video programming market. There are four different measurement scales that were frequently mentioned in earlier comments. They are: (1) The number of separately owned stations or outlets, (2) the audience share of the separately owned stations or systems, (3) the number of available channels, and (4) the audience share of the separately available channels. The Commission tentatively proposes to use the number of separately owned stations or outlets serving a market as our unit of measure. However, we recognize its potential limitations and would like additional comment on which of these four measurement scales the Commission should use. Specifically, if the Commission were to use the audience share of the separately available outlets or channels, how should we address the variability this introduces into our television station ownership rules because of changes in the number of outlets or channels offered and the popularity of those outlets' or channels' programming over time? Further, if the Commission were to count the number of available channels, how should mandated-access channels on cable systems be included? Finally, comment is invited on the conditions of entry and other structural features of this market which influence the exercise of market power.

Advertising Markets

National Advertising Market

14. *Delineation of Relevant Substitute Products and Suppliers.* Examination of available data (See appendix D in the full text of the decision) suggests that video advertising is the mass media of choice for advertisers wishing to reach national audiences. Unfortunately, the Commission has no clear evidence on the degree to which all the other alternatives reflected in Appendix D are economically relevant substitutes for video advertising. Consequently the Commission will tentatively consider video advertising an economically distinct segment of the national advertising market. However, we solicit any evidence that commenters can provide which demonstrates that some

of the other alternatives provided in Appendix D are economically relevant substitutes for video advertising of the national advertising market.

15. The Commission believes that the primary suppliers of video advertising in the national market consist of the broadcast networks, program syndicators, cable networks, and perhaps cable multiple system operators (MSOs). The Commission tentatively excludes individual broadcast television stations' and cable system operators' sale of advertising to media buyers (*i.e.*, spot sales) from this market because spot sales of advertising to national advertisers are frequently made to allow the national advertisers to reach a more targeted geographic focus and not to reach a national audience. Further, at this time, we do not include wireless cable operators, DBS operators, or VDT operators because they do not presently provide appreciable amounts of national advertising. However, the Commission solicits evidence which would demonstrate that we have either included too many or too few alternative suppliers of national video advertising.

16. *Delineation of the Market's Geographic Scope.* As stated earlier, we view the national advertising market as distinct from the local advertising market. By its very characterization, we view this as advertising directed to a national audience, and hence national in its geographic scope.

17. *Delineation of Market Power Measurement.* To measure market share for the purpose of discerning the concentration of this market, the Commission proposes to use advertising revenues. Because of data availability concerns, we will proxy this by advertiser expenditures by media, from such sources as McCann-Erickson Incorporated. However, we invite suggestions of alternative measures which might be better indicators of market share in the national video advertising market, on the availability of data necessary to use the measure, and on the conditions of entry and other structural features of this market which influence the exercise of market power.

The Video Program Production Market

18. Broadcast TV stations are also involved in the video program production market through their transmission of video programming produced by others. The competitive concern about multiple ownership of television stations in this market is one of either *monopsony* or *oligopsony* power—*i.e.*, the ability of one or several firms to artificially restrict the consumption of programming or price paid for programming.

19. *Delineation of Relevant Substitute Products and Suppliers.* The products involved in the video program production market, from movies to first-run syndicated television series, are readily distinguishable from other types of programming, like radio programming, and are therefore relevant substitutes. There are a number of sellers and/or suppliers in this market, including program production companies, broadcast television networks, movie studios, and syndicators.

20. Broadcast television stations are major buyers of video programs and typically acquire the video programs they deliver to consumers in one of three ways. First, a broadcaster can affiliate with a broadcast network and obtain an entire package or schedule of programming directly from its network (the network ''feed''). For clearing its airtime for network programming, an affiliate is compensated according to the time of the day it clears time for network programming and the size of its potential audience. Second, television broadcasters can also obtain programming from suppliers called ''syndicators''—national or regional entities that sell programming to television stations on a market-by-market basis. Finally, television stations can produce their own programming. Network affiliates and independent stations both generally air such locally-originated programming as local news and sporting events.

21. Over the last 15 years, the list of additional buyers of video programs for delivery to consumers has grown. This increase in potential purchasers would seem to imply that there is competition among buyers of video programming and, thus, concerns that television broadcasting companies exercise oligopsony power in the purchase of video programs have lessened to some extent. However, the Commission invites comment on this implication.

22. *Delineation of the Market's Geographic Scope.* The video programming production market is clearly national and perhaps international in scope, because television broadcasters obtain a large portion of their programs from national providers. The fact that television broadcasters produce some programming locally does not detract from the national scope of this market, because the television broadcasters could reasonably turn to national sources of supply for programming.

23. *Delineation of Market Power Measurement.* The Commission proposes to use expenditures on video programming as the proper means of determining market shares for the purposes of examining the buying power of the relevant purchasers of video programming. Commenters are requested to discuss whether this a proper measure for assessing the potential for oligopsony power in this market and on the conditions of entry and other structural features of this market which influence the exercise of market power.

Tentative Economic Conclusions

24. Above, the Commission has reached a series of tentative conclusions about the three markets that broadcast television stations are involved in that are important to consider in the context of this FNPRM. The Commission will assume these delineations of relevant substitutes and suppliers, geographic scope, and measures of market power for the market for delivered programming, the market for advertising, and the video program production market in subsequent analyses of the effect of broadcast ownership rules under consideration. To aid the reader, the Commission set out the alternatives in Appendix E of the full text of the decision, and those starred alternatives that will be tentatively used as working assumptions about the relevant markets in further discussion. Clearly these delineations should be the focus of comments on our competitive analysis of television broadcasting, and so are subject to change based upon comments and evidence received in response to the FNPRM.

25. In analyzing the economic effects of the rules under consideration, the Commission assumes the above product market descriptions, and considers: (1) Whether the existing evidence points currently to exercise of market power (focusing upon prices in the different markets); and (2) whether relaxing the current rules will substantially increase the concentration of these markets to levels which raise concerns about the potential for the exercise of market power?

II. Diversity Analysis of Television Broadcasting

26. The Commission has historically examined the effectiveness of its broadcast regulations in achieving diversity goals by primarily assessing diversity within the broadcasting industry, on national and local levels. However, due to the increasing availability of a variety of video programming sources, the Commission believes that a new framework for

assessing diversity, which takes into account the developments in the communications marketplace and which captures the rigor of our economic analysis may be appropriate.

27. In the full text of this FNPRM, the Commission lays out its traditional diversity goals and approaches for achieving them, raises questions concerning new approaches for defining diversity, and seeks comment on how to apply a framework for assessing the efficacy of broadcast regulations in achieving these goals. More specifically, Section IV A describes the three types of diversity that the Commission's rules have attempted to foster—viewpoint, outlet and source diversity, and the two basic techniques the Commission has used to achieve these diversity goals—direct means (such as nonentertainment programming guidelines) and indirect means (like our structurally-based ownership rules). Section IV B, then considers new approaches to ensure diversity, and Sections IV C and D set forth possible methods for defining what markets should be evaluated to determine whether the Commission's diversity goals are being served by the particular broadcast regulation in question. Section IV C proposes a broadening of the ''product'' market that the Commission has traditionally examined for diversity purposes, to go beyond just broadcast-delivered video programming received in the home, and Section IV D discusses the geographic markets the Commission would examine in determining whether its diversity goals are being furthered by the broadcast regulation in question.

28. Once the Commission has determined the appropriate product and geographic markets that are relevant for assessing whether the diversity goals of a rule are being met, we will examine each rule at issue by (a) identifying which diversity goal or goals the rule seeks to foster (*e.g.*, viewpoint, outlet and/or source), (b) determining whether the rule in fact fosters such goals in the relevant markets, and (c) deciding whether, in those markets, there is a need for continued regulation to maintain or increase existing levels of diversity.

III. National Ownership Rule

29. Currently, a company is limited to owning 12 broadcast TV stations nationally in different local markets and to a maximum aggregate 25% national audience reach. The reach limit presently prevents a group owner from owning television stations in each of the 12 largest markets. The national networks and some other group owners have concentrated their station purchases on stations located in markets with the largest audiences. As a result of this strategy, some group owners have reached the 25% audience reach limit before they have acquired 12 stations. Thus, it appears that for many of the existing national TV group owners, the 25% national audience reach limit is the more binding regulatory constraint on group acquisition of additional stations nationally. In order to examine whether the national ownership limits should be relaxed, the full text of this FNPRM presents first a competitive analysis and then a diversity analysis.

Effects on Competition

30. In conducting the competitive analysis, the Commission seeks to examine the effects of relaxing these rules on the potential competitiveness of the markets for delivered video programming, advertising, and video program production. The primary focus in each of these discussions is on the effect of changing the rules on the concentration of the market. As a consequence of these analyses, the FNPRM solicits comments on a number of issues such as: (1) The effect of relaxation of the national ownership limits on competition in the local market for delivered video programming; (2) the effect of relaxation of the national ownership limits on competition in local advertising markets; (3) evidence concerning economies in the distribution of video programming which may accrue to group owners of television stations, particularly if the commenters distinguishes between the effects of owning a group of stations and the effects of affiliating with a network; and (4) the effect relaxation of national group ownership limits might have on the prices of broadcast television stations, with its attendant effect on the ability of minorities to acquire broadcast television stations.

Effects on Diversity

31. In conducting the diversity analysis, the Commission seeks to examine the effects of relaxing these rules on the diversity of viewpoints available to the public, paying particular attention to the diversity of voices. The FNPRM notes that one of the premises of the national television ownership limitations has been that placing limitations on the number of stations a party can have a cognizable interest in promotes diversity outlets and viewpoints, and limits the degree of control over viewpoints expressed nationally that any entity could have thus furthering First Amendment goals. However, while the national ownership rules may foster these goals, and especially outlet diversity, the rules may not be essential to achieving such diversity. It appears that such factors as increased video media competition, network affiliation and diversity on the local level all favor alteration of the national ownership limitations. While the Commission's analysis suggests that, from a diversity standpoint, changes in the current national ownership limitations may be warranted, commenters should nevertheless address what effect, if any, group ownership and consolidation of ownership nationally would have on viewpoint diversity in news and public affairs programming, especially locally. Additionally, for national news, network affiliated stations primarily use their network affiliation to provide national news programming, and broadcast networks must compete with each other and with cable news networks in providing national news. Consequently, we ask whether changing national group ownership rules would have any impact on the delivery of national news and, if so, what that impact would be. Finally, given that the pursuit of large audiences may drive all licensees—whether group owners or not—towards the exclusion of controversial, non-mainstream subjects from their programming, does ownership diversity, indeed, have a major effect on viewpoint diversity with respect to television?

Tentative Proposals

32. The Commission tentatively concludes that liberalization of the national ownership limits would not have an adverse impact upon competitiveness of the markets for delivered video programming, the market for advertising, or the video program production market. Nor do we believe that raising the national ownership limits would have serious adverse effects on diversity. Therefore, the Commission proposes raising national ownership limits and seeks comment about the manner in which these limits should be expressed (*e.g.*, number of stations or outlets, number of stations or outlets with a reach cap, reach cap without any limit on the number of stations or outlets, or audience share cap) and the extent to which they should be raised. The Commission believes that changes in the national multiple ownership rules should be incremental in order to avoid significant dislocation in the television industry.

33. The NPRM in this proceeding proposed several adjustments to the multiple ownership rules, which

commenters should consider in the context of this decision. The NPRM proposed amending the national numerical limit to permit common ownership of 18, 20 or 24 television stations and altering the national reach restriction to permit a group owner to reach 30 or 35 percent. Alternatively, the NPRM sought comment on whether to modify only the numerical limit, retaining the 25 percent reach limit. Commenters were mixed in their responses to each of these proposals and provided little structured analysis by which we could compare contrasting positions. Consequently, comments are requested on these proposals which are structured in a manner consistent with the analytical framework proposed herein.

34. Comment is also invited on the following new proposal. The Commission could eliminate the numerical station limit entirely, and allow the reach limit to increase by some fixed percentage, such as 5% every 3 years, until the reach limit rises to 50%, the final limit. During this period, the Commission would monitor the relevant markets and determine whether or not problems have arisen which call for a halt in the relaxation of the national ownership limit. The Commission believes that formulating national limits only in terms of reach, rather than in conjunction with a number of stations limit, may be preferred because it captures the relevant dimension of interest (*i.e.*, the total audience potentially available) and it allows companies flexibility to own either a few stations serving large population markets or a larger number of stations serving small population markets. In addition to these advantages, it may be desirable to allow the reach limit to rise gradually rather than immediately to 50%, in order to monitor industry changes. Parties are encouraged to comment on all the above proposals and any others they wish to suggest.

35. In applying the above to full power stations, we note that UHF stations are now attributed with only 50 percent of their theoretical reach within the ADI. The Commission incorporated this adjustment in the 1984 rules to account for the physical limitations of the UHF signal. The Commission seeks comment on whether this adjustment should be retained. Similarly the Commission similarly seeks comment on whether and, if so, to what extent, there remains a disparity between VHF and UHF signal propagation and how this should affect the UHF discount, if at all. In this regard, comment is also invited on whether, should the UHF discount be modified, existing group owners should have the reach discount for any currently owned UHF stations ''grandfathered,'' or whether this should be done only where divestiture would otherwise result from a new UHF reach rule that no longer reduced the theoretical reach by 50%.

36. Next, the Commission notes that a television station that qualifies as a satellite is exempt from the national ownership restrictions. Because the Commission, in this proceeding is now considering modifying all aspects of the national and local ownership rules in this proceeding, we believe it is appropriate to incorporate MM Docket 87–8 (Second Further Notice of Proposed Rule Making at 56 FR 42306, August 27, 1991; Report and Order at 56 FR 31876, July 12, 1991) the outstanding proceeding on satellite television stations and resolve such ownership matters in this proceeding. In light of the proposed treatment of local marketing agreements in this FNPRM, we invite comment on whether satellite television stations should continue to be exempted from the national multiple ownership rules.

VI. Local Ownership Rule

37. The local ownership rule prohibits common ownership of two television stations whose grade B contours overlap, and is intended to preclude ownership of more than one television station in a local community in order to promote competition and diversity. As discussed earlier herein, television stations compete for viewership and sell advertising in local markets. Thus, it is important that the Commission's rules ensure workable competition in local markets. Accordingly, changes to the local ownership rule give rise to more serious concerns than changes to the national ownership rule. The Commission intends to carefully evaluate the economic factors that affect the local marketplace, including changes that occurred after the NPRM was adopted in 1992. We will also look at how the proposal to modify the contour overlap rule from Grade B to Grade A is affected by other proposals in this FNPRM and how it and these other proposals influence the effects of allowing common ownership of broadcast television stations with contour overlap in a local market.

Effects on Competition

38. Because commercial broadcast television station operators effectively compete with each other, with public broadcast television stations, with cable system operators, and others serving their ''local'' market, some existing large markets for delivered video programming appear to be unconcentrated when we use either the number of independent operators measure or the number of channels of programming measure for market share calculations.

39. Allowing one entity to own more than one broadcast TV station within a ''local'' market may permit the company to realize economies of scale, reducing the costs of operating the two stations. The Commission seeks hard evidence from commenters of the existence and magnitude of such economies, particularly information regarding the experience of those group owners who have consolidated pursuant to the Commission's relaxed local radio ownership rule and the one-to-a-market waiver standard. Comment is also invited on whether experiences with respect to the radio market can be used to predict the benefits of relaxing ownership rules in local television markets.

40. Allowing a company to own more than one broadcast TV station in a local market might give the company the economic power to raise video advertising rates within the local service area, if, by virtue of the combination, the local market became sufficiently concentrated. Evidence on whether significant market power in the local advertising market already exists is mixed. Further, at this time, it is not clear whether cable system operators offer effective competition to broadcast station operators in providing local advertising. It is also not clear how substitutable radio and newspaper local advertising is for broadcast television local advertising. Interested parties are asked to provide whatever data and analysis they can on the substitutability of these media in the local advertising market at present and in the future. Assuming that they are not effective substitutes, comment is also requested on how many independent providers of local video advertising are necessary to ensure effective competition in this market. Statistical evidence supporting comments will especially be welcome.

41. Television stations purchase or barter for video programming in a national market in the sense that producers of video programming typically create product which is marketed to be broadcast in more than one local market. However, the program market could be affected if Commission relaxation of the local ownership rules permitted one or a few broadcast station owners to exercise significant market power in the purchase of video programming. The result might be that suppliers of video programming would

be forced to sell their product at below competitive market prices in order to gain access to the local market controlled by one or a few local group owners. However, the ever increasing number of alternative providers of delivered video programming in just about every major market may mitigate the potential distortion of video programming prices through an entity's control of broadcast access to television sets in a local market by providing program producers with additional outlets for their product. The Commission solicits comment on this point and evidence on the potential market power in the purchase of video programming in different markets if we were to relax the local ownership rule.

42. As with relaxing the national ownership limits, relaxing local ownership limits could increase the price of broadcast television stations. The potential for increased prices of broadcast TV stations is troubling in light of the limited financial ability of minorities and women to purchase TV stations. The Commission addressed issues relating to the difficulties of minorities and women in obtaining access to capital in a Notice of Proposed Rule Making in MM Docket 94–150 (FCC 94–324, adopted December 15, 1994, and released January 12, 1995). We ask for comment and analysis of these issues.

43. The Commission is also concerned about the possibility that changes in the local ownership limits may adversely affect the pool of independent television stations available for acquisition by and/or affiliation with nascent broadcast networks. Consequently, we solicit comment on the effects of allowing station ownership consolidation at the local level on the future development of these nascent broadcast networks. A separate but related concern, is with allowing the owner of a station affiliated with or owned by an established broadcast network to own another broadcast television station serving the same market. This possibility may confer on such an owner more market power than would arise from an independent station operator acquiring a second station in the market. Comment is sought on the importance of this concern.

Effects on Diversity

44. The Commission's concern with diversity is most acute with respect to local ownership issues. The Commission has consistently believed that a reduction in local outlet diversity would translate into a reduction of viewpoint diversity. While the existing duopoly rule may foster diversity by assuring that only one television outlet in a given market can be owned by a single entity or individual (assuring that each local television outlet is owned by a different person or entity), we believe it is appropriate to solicit comments on whether the rule remains essential in its current form to ensure diversity.

45. In recent years the totality of information outlets on the local level has increased. In a recent radio ownership proceeding (Report and Order in MM Docket No. 91–140, 57 FR 18089, April 29, 1992), the Commission found that the abundance of radio and other media outlets now available ''make clear that the local marketplace is far more competitive and diverse—indeed, has been virtually transformed—since the local ownership rules were first promulgated.'' On this basis, the Commission liberalized the duopoly rule with respect to radio.

46. With respect to television, because of the fewer number of broadcast television stations than broadcast radio stations, we must be cautious in our analysis of outlet diversity, and the impact of mergers among TV stations on the local level on such diversity. Further, it should be recognized that the apparent level of television outlet diversity may not reflect what is in fact available to, or obtainable by, many consumers. For example, cable and other subscription services are perceived to provide an alternative video outlets. How, if at all, should the portion of viewers that chooses not to subscribe affect our analysis of available programming outlets? Is an outlet of opinion less available simply because it is not popular or is more costly? Further comment is requested on the degree to which such fee-based sources and outlets for video programming provide true alternatives to over-the-air television for purposes of ensuring viewpoint diversity.

Tentative Proposals

47. The Commission sets out one specific proposal and requests comment on other possible rule changes. The current rule prohibits common ownership of broadcast television stations with overlapping Grade B contours. The Commission believes that the record already established in this proceeding is sufficient to justify proposing to relax the rule by decreasing its prohibited contour overlap from Grade B to Grade A. Comment is sought on this proposal as well as on other possible ways in which the rule could be modified.

48. The NPRM, asked whether the Commission should modify the contour overlap rule, balancing the greater flexibility afforded broadcasters against the potential harm to our underlying competition and diversity concerns. Comment was invited on whether the predicted Grade B contour should continue to determine prohibited overlap, or whether it should be changed to the Grade A contour. The vast majority of commenters agreed that a Grade A contour standard provides a substantially more realistic and accurate measure of a station's core market than the existing Grade B contour rule. The commenters also stated that the switch from a Grade B standard to a Grade A standard will increase broadcasters' long-term viability by enabling them to reap the benefits provided by ''economies of scale''—without any commensurate loss in program diversity. The Commission thus proposes to modify this rule so that joint ownership will be precluded only where there is overlap of the Grade A contours. The Commission seeks further comment on this proposal in light of our competitive and diversity analyses of the television broadcasting industry. Comment is also requested on what the impact would be of moving from a Grade B to a Grade A contour rule on particular markets. Further, how many cases would occur in which relaxing the rule to a Grade A contour would allow an entity to own two stations within a single designated market area or within a single metropolitan statistical area?

49. As a separate matter from whichever contour test the Commission ultimately decides to use, the issue arises as to whether, in at least some situations, a company should be allowed to acquire stations with overlapping contours. The Commission requests comment on whether to permit common ownership in local markets, such as UHF/UHF combinations or UHF/VHF combinations, or maintain the current prohibition against contour overlap and allow waivers either under a presumptive guideline or a case-by-case basis.

50. The NPRM asked whether or not an entity should be permitted to own two UHF stations with overlapping contours. Comment was also sought on whether the Commission should permit a UHF station to merge with a VHF station as a more effective way of preserving or improving the service of UHF stations, and on whether it would be appropriate to consider such consolidations only where a minimum number of separately owned television stations would remain after the proposed combination. Commenters were very divided as to whether the economic benefits to licensees outweighed the potential harm to

competition and diversity. Commenters are invited to submit further analyses of these proposals with reference to a Grade A contour definition of the relevant local geographic market for purposes of establishing local television ownership limits. However, commenters arguing that the economic benefits outweigh the potential harm to competition and diversity need to provide more specific evidence of the projected economic benefits as weighed against the potential harm to competition and diversity.

51. If the Commission were to maintain the existing prohibition against common ownership of broadcast television stations with contour overlap but allow waivers, it must also be determined whether to follow a case-by-case approach. Parties may wish to address the factors the Commission currently considers in one-to-a-market waivers, which include the financial condition of the station to be purchased, the competitive and diversity characteristics of the market, and potential public interest benefits.

52. Whether the Commission relaxes the rule or adopts a waiver standard, it is necessary to consider the number of independent suppliers serving the market. In a number of our past ownership proceedings, the Commission described and generally took into account the growth of new media that provide competitive and diversity enhancing alternatives to over-the-air television (or radio). However, with the exception of the one-to-a-market rule, the Commission fashioned the actual rule that counted only television stations or only radio stations in the local or in the national market. Given the conclusions discussed above regarding who are the relevant alternative suppliers and the kind of analysis we were concerned with (*e.g.*, competitive analysis versus diversity analysis), comment is invited on the issue of which market or analysis should control the determination of who are the independent suppliers that the Commission counts for purposes of setting local ownership limits.

53. In determining the number of independent suppliers for either competitive or diversity analysis of a relaxation to the contour overlap rule, the Commission must define the region in which the count is performed. One proposal is to treat the overlap area as the relevant region. Another proposal would be to treat the relevant region as the DMA within which the two broadcast television stations operate. This second proposal might allow joint ownership of two broadcast television stations with contour overlap when such joint ownership does not reduce the number of independent suppliers in their DMA below some critical level. The Commission solicits comment on both these proposals.

54. Finally, should the Commission decide to designate a minimum number of independent suppliers that should remain in a local market, the question must be addressed of whether we should choose a number which allows everyone in the market currently to acquire another station or whether to allow firms to be acquired on a first-come first-served basis until some minimum number of independent broadcast television stations remain. The Commission seeks guidance on which threshold number, if any, of remaining independent suppliers would satisfy both competition and diversity concerns. Further, comment is solicited on whether simply counting outlets is preferable to examining audience share for addressing the impact of an outlet on our competitive and diversity concerns. Finally, guidance is sought on which of the above approaches is the preferred approach with respect to these concerns.

II. The Radio-Television Cross-Ownership Rule

55. The radio-television cross-ownership rule, or the one-to-a-market rule, basically provides that a company cannot own both a radio station and a television station located in a given ''local'' market. This rule was adopted to limit any potential market power in the media market, and to ensure a sufficient diversity of broadcast outlets, and was amended in 1989 to permit, on a waiver basis, radio-television mergers as long as the combination occurred in one of the top 25 television markets and 30 separately owned broadcast licensees remained after the combination, or if the waiver request involved a ''failed'' station, or if the waiver request satisfactorily addressed five criteria relating to public interest concerns. Whether this limit is still needed to promote these ends will be considered in the following discussion.

Effects on Competition

56. As indicated above, the Commission tentatively concludes that delivered video programming and delivered audio programming were sufficiently distinct products so as to represent different product markets for competitive analysis purposes. Commenters are asked to provide information on the nature and extent of harm, if any, from relaxing this rule on these markets.

57. The main potential economic cost of permitting the owner of a broadcast TV station to own a broadcast radio station in a local market, or vice versa, appears to be that it might give the company the market power to raise local radio and/or television advertising rates. People may listen to radio and watch television at different times while advertisers might view either means as an acceptable substitute for getting their message to the same people. On the other hand, some advertising messages may be more effective on television and others more effective on radio. However, as our earlier discussion indicated, we do not have sufficient evidence on this issue to address the effects of relaxing the one-to-a-market rule on the local advertising market. Assuming for the purposes of soliciting comments, that they are economically relevant substitutes, then the issue arises as to how many independent suppliers of local advertising are necessary to ensure that these markets are workably competitive. The Commission invites comment and evidence on both these issues.

58. Earlier in the FNPRM, the Commission tentatively concluded that video programs are sufficiently distinct products that the market for video program production should be considered a separate product market. By this logic, the markets for video program production and audio program production are arguably distinct markets. Thus, market power in the video program production market should not translate into market power in the audio program production market, unless the company already has such market power. However, these program production markets are national markets and presumably the national ownership limits for either broadcasting station type should prevent a company from acquiring such market power. Thus the Commission sees no reason why relaxing the one-to-a-market rule should harm competition in either of these supply markets, but seeks comment on this tentative conclusion.

59. The benefits of permitting the owner of a broadcast TV station to own a broadcast radio station in the same local market, or vice versa were discussed in the Memorandum Opinion and Order in MM Docket No. 87–7 (54 FR 32639, August 9, 1989). The company can reduce its video and audio programming costs through a reduction in personnel and overhead expenses and could use one advertising sales force instead of two for the two stations. This reduction in expense could make the joint enterprise more economically

viable than the separate operations were before the combination took place. It would be important for commenters to provide factual evidence on the size of such efficiency gains so the Commission could weigh them against any potential costs of relaxing the one-to-a-market rule.

Effects on Diversity

60. The radio-television (''one to a market'') rule is intended to foster outlet and viewpoint diversity on the local level. The rule appears to be achieving the diversity goals for which it was adopted, but may not be necessary in its current form to ensure competitive and diverse radio and television markets. Nevertheless, as noted above, diversity has the most impact in the local context and we must be cautious in taking any action that could serve to reduce that diversity, particularly in smaller markets.

Tentative Proposals

61. The NPRM in this proceeding sought comment on a variety of proposed relaxations to the one-to-a-market rule, including: (1) Elimination of the rule—using local limits of each service to prevent undue concentration; (2) allowing common ownership of one AM, one FM and one TV station per market; (3) allowing TV–AM combinations only; and, (4) codifying current waiver criteria and applying them to all markets, and not just the top 25 markets, where 30 independently owned voices remain. Commenters were generally in favor of elimination or relaxation of the current rule, arguing that the economies from joint operations would allow more stations to remain on the air and would also permit licensees to provide better service to the public.

62. The Commission tentatively concludes that there are two alternative approaches towards modifying the one-to-a-market rule. On the one hand, the Commission could find that radio stations and television stations do not compete in the same local advertising, program delivery, or diversity markets and propose to eliminate this rule entirely and rely on local ownership rules to ensure competition and diversity at the local level. On the other hand, the Commission could conclude that radio and television do compete in some or all of these local markets, in which case we propose to allow radio-television combinations in those markets that have a sufficient number of remaining alternative suppliers/outlets as to ensure sufficient diversity and workable competition. In this regard, the Commission seeks comment on whether ''30 separately owned, operated and controlled broadcast licensees'' continues to represent the appropriate minimum requirement, or whether diversity and competition concerns can be satisfied if a lesser number of licensees remain, such as 20. Further, comment is invited on whether this count should be for independent supplier/outlets within a DMA or some other geographic market delineation. Finally, the Commission notes that if the latter proposal, to modify rather than eliminate the rule were to be adopted, we also propose to continue accepting waivers for ''failed'' broadcast stations as currently provided for in note 7 of § 73.3555 of the Commission's Rules, and to continue evaluating other waiver requests on the basis of the five considerations set forth in the Second Report and Order (54 FR 08744, March 2, 1989) and the Memorandum and Order (as cited above) in MM Docket No. 87–7.

VIII. Local Marketing Agreements

Description

63. A Local Marketing Agreement (LMA) is a type of joint venture that generally involves the sale by a licensee of discrete blocks of time to a broker who then supplies the programming to fill that time and sells the commercial spot announcements to support it. Such agreements enable separately owned stations to function cooperatively via joint advertising, shared technical facilities, and joint programming arrangements. In MM Docket 91–140, the Commission adopted guidelines primarily applicable to the AM and FM services for LMAs. We also decided that TV station LMAs should be kept at the station and be made available for inspection upon request by the Commission.

64. The NPRM sought comment on the prevalence of TV LMAs, whether they presented the same types of competitive and diversity concerns that the Commission found in the radio context, and whether they should be subject to some limitations. Few commenters addressed LMAs, and those who did comment on this issue basically expressed two divergent general views: (1) That TV LMAs should remain unregulated absent evidence of abuse, irrespective of whether new TV multiple ownership rules are adopted; or (2) that if the Commission did adopt rules governing TV LMAs, such rules should be no more restrictive than those governing radio LMAs. The Commission seeks further comment and specific information on this matter to enable us to choice between these views and adopt appropriate guidelines for TV LMAs.

65. Specifically, the Commission solicits specific quantitative data about TV LMAs, indicating the number of such agreements currently in existence. If such comment is not received, it may be necessary for the Commission to conduct a survey to obtain this quantitative data. Also do TV LMAs serve the same purposes as radio LMAs or are there significant differences between them? What benefits accrue to the parties involved in TV LMAs? What benefits accrue to the public from TV LMAs?

Analysis and Tentative Proposals

66. The Commission believes that, to ensure that TV stations using LMAs comply with the TV multiple ownership rules, regardless of whether such rules are modified, some guidelines may be necessary. We tentatively propose to treat LMAs involving television stations in the same basic manner as radio station LMAs. That is, time brokerage of another television station in the same market for more than fifteen percent of the brokered station's weekly broadcast hours would result in counting the brokered station toward the brokering licensee's national and local ownership limits. If the local TV multiple ownership rules are not relaxed, such an attribution provision would preclude TV LMAs in any market where the time broker owns or has an attributable interest in another TV station. Additionally, TV LMAs would be required to be filed with the Commission in addition to the existing requirement that they be kept at the stations involved in an LMA. Furthermore, the TV LMA guidelines would allow for ''grandfathering'' TV LMAs entered into prior to the adoption date of the FNPRM, subject to renewability and transferability guidelines similar to those governing radio LMAs.

67. To test the appropriateness of these proposals, the Commission seeks comment on the following issues. Are there any compelling reasons why the Commission should not apply the existing radio LMA guidelines, including the filing requirements, the limitation on program duplication, and the ownership attribution provisions, to TV LMAs? If the radio ownership attribution rule applies to TV LMAs, should the Commission use the fifteen percent benchmark that it used in the radio context, or is some other percentage more appropriate? What effects, if any, should LMAs have on the renewal expectancy of TV stations? What effects, if any, would these

proposed attribution guidelines have on the ownership of TV stations by minorities and women, and how should the Commission deal with such effects?

68. To avoid any unnecessary disruption to existing contractual relationships, the Commission also seeks comment on guidelines concerning the termination, transferability and renewal of TV LMAs. Should the contract rights associated with existing TV LMAs be transferable when the brokering station is sold? If so, what restrictions, if any, should apply? Should TV LMAs entered into before the adoption date of this Further Notice be subject to the same ''grandfathering'' and renewability guidelines that govern radio LMAs as set forth in the Second Radio Reconsideration, *supra,* irrespective of whether the local TV multiple ownership rules are modified? Specifically, should existing LMAs be ''grandfathered'' for the remainder of the initial term of the LMA and then be subject to the governing local TV multiple ownership rules?

Administrative Matters

69. Pursuant to applicable procedures set forth in Section 1.415 and 1.419 of the Commission's Rules, 47 CFR 1.415 and 1.419, interested parties may file comments on or before April 17, 1995, and reply comments on or before May 17, 1995. To file formally in this proceeding, you must file an original plus five copies of all comments, reply comments, and supporting comments. If you want each Commissioner to receive a personal copy of your comments, you must file an original plus nine copies. You should send comments and reply comments to Office of the Secretary, Federal Communications Commission, Washington, D.C. 20554. Comments and reply comments will be available for public inspection during regular business hours in the FCC Reference Center (Room 239), 1919 M Street, N.W., Washington, D.C. 20554.

70. This is a non-restricted notice and comment rulemaking proceeding. *Ex parte* presentations are permitted, except during the Sunshine Agenda period, provided they are disclosed as provided in the Commission Rules. See generally 47 C.F.R. 1.1202, 1.1203, and 1.1206(a).

Initial Regulatory Flexibility Act Statement

71. The Initial Regulatory Flexibility Act Statement found in paragraphs 18 through 25 (57 FR at 28166–67) in the summary of the Notice of Proposed Rule Making in this proceeding remains unchanged.

72. As required by Section 603 of the Regulatory Flexibility Act, the Commission has prepared an Initial Regulatory Flexibility Analysis (IRFA) of the expected impact on small entities of the proposals suggested in this document. The IRFA is set forth in the Notice of Proposed Rule Making in this proceeding as set forth above. Written public comments are requested on the IRFA. These comments must be filed in accordance with the same filing deadlines as comments on the rest of this Further Notice, but they must have a separate and distinct heading designating them as responses to the Initial Regulatory Flexibility Analysis. The Secretary shall send a copy of this Further Notice of Proposed Rule Making, including the Initial Regulatory Flexibility Analysis, to the Chief Counsel for Advocacy of the Small Business Administration in accordance with paragraph 603(a) of the Regulatory Flexibility Act. Public Law 96–354, 94 Stat. 1164, 5 U.S.C. Section 601 *et seq.* (1981).

List of Subjects in 47 CFR Part 73

Television broadcasting.

Federal Communications Commission.

LaVera F. Marshall,

Acting Secretary.

[FR Doc. 95–2502 Filed 2–1–95; 8:45 am]

BILLING CODE 6712–01–M

Notices

Federal Register
Vol. 60, No. 22
Thursday, February 2, 1995

This section of the FEDERAL REGISTER contains documents other than rules or proposed rules that are applicable to the public. Notices of hearings and investigations, committee meetings, agency decisions and rulings, delegations of authority, filing of petitions and applications and agency statements of organization and functions are examples of documents appearing in this section.

DEPARTMENT OF AGRICULTURE

Forms Under Review of Office of Management and Budget

January 27, 1995.

The Department of Agriculture has submitted to OMB for review the following proposal for the collection of information under the provisions of the Paperwork Reduction Act (44 U.S.C. Chapter 35) since the last list was published. This list is grouped into new proposals, revisions, extension or reinstatements. Each entry contains the following information:

(1) Agency proposing the information collection; (2) Title the information collection; (3) Form number(s), if applicable; (4) Who will be required or asked to report; (5) An estimate of the number of responses; (6) An estimate of the total number of hours needed to provide the information; (7) Name and telephone number of the agency contact person.

Questions about the items in the listing should be directed to the agency person named at the end of each entry. Copies of the proposed forms and supporting documents may be obtained from: Clearance Officer, USDA, OIRM, Room 404–W Admin. Bldg., Washington, D.C. 20250; (202) 690–2118.

Revision

• Federal Crop Insurance Corporation
Crop Insurance Acreage Report and Unit Division Option Form FCI–19 and FCI–553
Individuals or households; Farms; 1,750,000 responses; 872,500 hours
Bonnie L. Hart, (202) 254–8393

• Federal Crop Insurance Corporation
Crop Insurance Application and Continuous Contract FCI–12
Individuals or households; Farms; 1,750,000 responses; 147,000 hours
Bonnie L. Hart, (202) 254–8393

• Federal Crop Insurance Corporation
Production and Yield Report FCI–19–A
Individuals or households, Farms; 1,750,000 responses; 437,500 hours
Bonnie L. Hart, (202) 254–8393

• Agricultural Marketing Service
7 CFR Part 70, Regulations for voluntary Grading of Poultry Products and Rabbit Products and U.S. Classes, Standards, and Grades
PY–32 and PY–33
State or local governments; Businesses or other for-profit; small businesses or organizations; 31,959 responses; 3,027 hours
Martin Szekeresh, Jr., (202) 720–3506

• Forest Service
State and Private Forestry Assistance; Stewardship Incentive Program—36 CFR Part 230
USDA Forms SIP–245, –36, –502, –211, –211–1
Individuals or households; farms; businesses or other for-profit; Federal agencies or employees; non-profit institutions; small businesses or organizations; 30,000 responses; 62,100 hours

New Collection-Emergency

• Agricultural Marketing Service
Ocean Freight Rate Study
Individuals or households; business or other for-profit; farms; Federal Government; 150 responses; 450 hours
Kate E. Healey (202), 690–2325

Larry K. Roberson,
Deputy Departmental Clearance Officer.

[FR Doc. 95–2589 Filed 2–1–95; 8:45 am]

BILLING CODE 3410–01–M

Natural Resources Conservation Service; Nahunta Swamp Watershed; Green and Wayne Counties, NC

AGENCY: Natural Resources Conservation Service, USDA.

ACTION: Notice of finding of no significant impact.

SUMMARY: Pursuant to Section 102(2)(C) of the National Environmental Policy Act of 1969; the Council of Environmental Quality Guidelines (40 CFR part 1500); and the Natural Resources Conservation Service Guidelines (7 CFR part 650); the Division of Soil and Water Conservation, North Carolina Department of Environment, Health, and Natural Resources and the Natural Resources Conservation Service, United States Department of Agriculture, give notice that an environmental impact statement is not being prepared for the Nahunta Swamp Watershed, Greene and Wayne Counties, North Carolina.

FOR FURTHER INFORMATION CONTACT: Dewey C. Botts, Director, Division of Soil and Water Conservation, North Carolina Department of Environment, Health, and Natural Resources, P.O. Box 27687, Raleigh, North Carolina 27611, Telephone (919) 733–2302 or Richard A. Gallo, State Conservationist, Natural Resources Conservation Service, 4405 Bland Road, Suite 205, Raleigh, North Carolina 27609, Telephone (919) 790–2888.

SUPPLEMENTARY INFORMATION: The Environmental Assessment of this federally assisted action indicates that the project will not cause significant adverse local, regional, or national impacts on the environment. As a result of these findings, Richard A. Gallo, State Conservationist, has determined that the preparation and review of an environmental impact statement are not needed for this project.

The project concerns a plan for watershed protection. The planned works of improvement include accelerated technical and financial assistance to apply land treatment measures on 7,000 acres of cropland and install 15 animal waste management systems. Additional non-federal funding has been secured for restoration of 500 acres of wetlands (bottomland hardwoods) in the flood plain of Nahunta Swamp.

The Notice of A Finding of No Significant Impact (FONSI) has been forwarded to the Environmental Protection Agency and to various federal, state, and local agencies and interested parties. A limited number of copies of the FONSI are available to fill single copy request at the above address. Basic data developed during the environmental assessment are on file and may be reviewed by contacting Dewey C. Botts.

No administrative action on implementation of the proposal will be taken until 30 days after the date of this publication in the **Federal Register**.

Dated: January 24, 1995.

Richard A. Gallo,
State Conservationist.

(''This activity is listed in the Catalog of Federal Domestic Assistance under No.

10.904—Watershed Protection and Flood Prevention—and is subject to the provisions of Executive Order 12372 which requires intergovernmental consultation with state and local officials.'')

[FR Doc. 95–2460 Filed 2–2–95; 8:45 am]

BILLING CODE 3410–16–M

Forest Service

Snoqualmie Pass Adaptive Management Area Plan, Wenatchee National Forest, Kittitas County Washington and Mt. Baker-Snoqualmie National Forest, King County, Washington

AGENCY: Forest Service, USDA.

ACTION: Notice of intent to prepare an environmental impact statement.

SUMMARY: The USDA-Forest Service, will prepare an environmental impact statement (EIS) to develop and evaluate a range of alternatives for management of the 212,700 acres in the Snoqualmie Pass Adaptive Management Area (AMA), as directed by the April 13, 1994 Record of Decision (ROD) for Amendments to Forest Service and Bureau of Land Management Planning Documents Within the Range of the Northern Spotted Owl. This area is located within both the Cle Elum Ranger District of the Wenatchee National Forest in Kittitas County, and the North Bend Ranger District of the Mount Baker-Snoqualmie National Forest in King County.

The alternatives will be consistent with the emphasis direction as described in the ROD, which is the ''Development and implementation, with the participation of the U.S. Fish and Wildlife Service, of a scientifically credible, comprehensive plan for providing late-successional forest on the ''checkerboard'' lands''. This forest Service proposal is scheduled for completion no later than December 1995.

DATES: Comments concerning the scope and implementation of this proposal must be received by February 20, 1995.

FOR FURTHER INFORMATION CONTACT: Questions and comments about this EIS should be directed to Floyd J. Rogalski, Project Planner, Cle Elum Ranger District, 803 West Second Street, Cle Elum, Washington 98922; Phone 509–674–4411, ext. 315.

SUPPLEMENTARY INFORMATION: The Forest Service is initiating this action in response to the Snoqualmie Pass AMA emphasis direction, on page D–16 of the ROD for Amendments to Forest Service and Bureau of Land Management Planning Documents Within the Range of the Northern Spotted Owl.

The Snoqualmie Pass AMA is a 212,700 acre portion of the North Cascades east of North Bend and west Cle Elum, along Interstate 90. Most of the AMA is within the Wenatchee National Forest. The western portion is within the Mt. Baker-Snoqualmie National Forest. The vegetation in the area varies from cool, moist forest on the westside of the crest to drier, more fire prone forest on the eastside. The most defining characteristic of this AMA is its checkerboard ownership. Approximately every other square mile is privately owned, even though it is within the National Forest boundary.

Issues that have been identified to date include: (1) Provision of late-successional forest and connectivity in an area where much of the land belongs to private companies; (2) the fact that the I–90 highway corridor acts as a barrier to the movement of plants and animals; (3) the need to create an environment where communities and agencies can work together to develop an innovative management approach.

The proposed action is to adopt the Standards and Guidelines for the Late-Successional Reserves and Riparian Reserves from the ROD for Amendments to Forest Service and Bureau of Land Management Planning Documents Within the Range of the Northern Spotted Owl.

The plan will focus on Late-successional characteristics and riparian guidelines, deferring to the Mt. Baker-Snoqualmie and Wenatchee Land and Resource Management Plans on other issues such as recreation and wilderness management. The decision to be made is what standards and guidelines, if any, to adopt for the management of late-successional and riparian habitat in the Snoqualmie Pass Adaptive Management Area.

Alternatives to the proposed action that we have identified at this time include: (1) No Action; and (2) Developing another scientifically credible plan(s) that meets the emphasis of the Snoqualmie Pass Adaptive Management Area. Other alternatives will be developed in response to issues identified during the scoping process for the EIS. All alternatives will need to respond to specific conditions in the Snoqualmie Pass area.

Public participation will be especially important at several points during the analysis. The Forest Service will be seeking information, comments, and assistance from Federal, State, and local agencies, and other individuals or organizations who may be interested in or affected by the proposed action. The scoping process includes:

1. Identifying potential issues;
2. Identifying issues to be analyzed in depth;
3. Eliminating insignificant issues or those which have been covered by a relevant previous environmental process;
4. Exploring and identifying additional alternatives.
5. Identifying potential environmental effects of the proposed action and alternatives (i.e. direct, indirect, and cumulative effects and connected actions); and
6. Determining potential cooperating agencies and task assignments.

Public meetings will be held in both eastern and western Washington. Notice of meeting dates and locations will be published in the newspapers of record for the Wenatchee and Mt. Baker-Snoqualmie National Forests. These include the Seattle Post-intelligencer, Wenatchee World, and Yakima Herald Republic. The February 15th meeting will be a Scientist's Forum and will focus on scientific aspects of the AMA. The scoping meetings are planned to be held as follows.

January 31, 1995—7 to 9 p.m., North Bend Ranger Station, 42404 SE North Bend Way, North Bend, WA, Phone: 202–888–1421

February 9, 1995—7 to 9 p.m., Cle Elum Ranger Station, 803 West Second St., Cle Elum, WA, Phone: 509–674–4411

February 8, 1995—7 to 9 p.m., White River Ranger Station, 857 Roosevelt Ave. East, Enumclaw, WA, Phone: 206–825–6585

February 15, 1995—10 a.m. to 3 p.m., North Bend Ranger Station, 42404 SE North Bend Way, North Bend, WA, Phone: 206–888–1421.

The draft EIS is expected to be filed with the Environmental Protection Agency (EPA) and to be available for public review by October 1995. At that time, copies of the draft EIS will be distributed to interested and affected agencies, organizations, and members of the public for their review and comment. The comment period on the draft EIS will be 45 days from the date of the EPA Notice of Availability as published in the **Federal Register**. It is very important that those interested in the management of the Wenatchee and the Mt. Baker-Snoqualmie National Forests participate at that time.

To assist the Forest Service in identifying the considering issues and concerns on the proposed action, comments on the draft EIS should be as specified as possible. It is also helpful if comments refer to specific pages or

chapters of the draft EIS. Comments may also address the adequacy of the draft EIS or the merits of the alternatives formulated and discussed in the statement. (Reviewers may wish to refer to the Council on Environmental Quality Regulations for implementing the procedural provisions of the National Environmental Policy Act at 40 CFR 1503.3 in addressing these points).

The Forest Service believes it is important to give reviewers notice at this early stage of several court rulings related to public participation in the environmental review process. First, reviewers of a draft EIS must structure their participation in the environmental review of the proposal so that it is meaningful and alerts an agency to the reviewer's position and contentions. *Vermont Yankee Nuclear Power Corp.* v. *NRDC,* 435 U.S. 519, 553 (1978). Also, environmental objections that could be raised at the draft EIS stage but that are not raised until after completion of the final EIS may be waived or dismissed by the courts. *City of Angoon* v. *Hodel,* 803 f. 2d 1016, 1022 (9th Cir, 1986) and *Wisconsin Heritages, Inc.* v. *Harris,* 490 F. Supp. 1334, 1338 (E.D. Wis. 1980). Because of these court rulings, it is very important that those interested in this proposed action participate by the close of the comment period so that substantive comments and objections are made available to the Forest Service at a time when it can meaningfully consider them and respond to them in the final EIS. To assist the Forest Service in identifying and considering issues and concerns on the proposed action, comments on the draft EIS should be specified as possible.

The final EIS is scheduled to be completed in December 1995. In the final EIS, the Forest Service is required to respond to comments and responses received during the comment period that pertain to the environmental consequences discussed in the draft EIS and applicable laws, regulations, and policies considered in making the decision regarding this proposal. Sonny O'Neal, Forest Supervisor, Wenatchee National Forest and Dennis Bschor, Forest Supervisor, Mt. Baker-Snoqualmie National Forest are the responsible officials. As responsible officials they will document the decision and reasons for the decision in the Record of Decision. That decision will be subject to Forest Service appeal regulations (36 CFR Part 217).

Dated: January 25, 1995.

Sonny O'Neal,

Forest Supervisor, Wenatchee National Forest.

Dated: January 26, 1995.

Dennis E. Bschor,

Forest Supervisor, Mt. Baker-Snoqualmie National Forest.

[FR Doc. 95–2537 Filed 2–1–95; 8:45 am]

BILLING CODE 3410–11–M

Opportunity To Comment on the Preparation of a Draft Environmental Impact Statement To Salvage Fire-Killed Timber on the Almanor Ranger District, Lassen National Forest

AGENCY: Forest Service, USDA.

ACTION: Notice of intent to prepare an environmental impact statement for the Barkley Fire Salvage.

SUMMARY: The Department of Agriculture, Forest Service will prepare an environmental impact statement for a proposal to salvage approximately 2.6 million board feet (MMBF) of fire killed timber on 250 acres within the 44,000 acres burned by the Barkley Fire during September 1994 on the Lassen National Forest, Almanor Ranger District, Tehama County, California. The proposed project area is bordered by private timber land on the north, Deer Creek Canyon on the east, and the Ishi Wilderness to the west. The legal description is Sections 5, 6, 9, and 19 of T.26N., R.3E. M.D.M. The decision to be made is whether to salvage fire-killed timber from the Barkley Fire as proposed, and what mitigation measures will be in effect.

DATES: Written comments concerning the scope of the analysis and significant issues should be received by March 6, 1995.

ADDRESSES: Send comments about the proposed action and scope of the analysis to: Michael R. Williams, District Ranger, Almanor Ranger District, P.O. Box 767, Chester, California 96020.

FOR FURTHER INFORMATION CONTACT: Phil Tuma, District Forest Land Manager, Almanor Ranger District, P.O. Box 767, Chester, California 96020, (916) 258–2141.

SUPPLEMENTARY INFORMATION: The proposed fire salvage areas are within the former Polk Springs Roadless Area, which was released to non-wilderness management by the California Wilderness Act of 1984. The Lassen National Forest Land and Resource Management Plan (LRMP) was completed in 1993. The management direction in the LRMP for the proposed salvage area has management prescriptions of timber and semi-primitive non-motorized.

The proposal is whether or not to implement restoration projects on 250 acres within the Lower Deer Creek Management Area, including salvage timber harvest, fuels treatments and reforestation activities to restore the area to its natural vegetation type, and reduce fuel loading and the associated risk for future catastrophic intensity fires.

Public participation will be especially important at several points during the analysis. The first point is during the scoping process (40 CFR 1501.7). The Forest Service will be seeking information, comments and assistance from Federal, State, and local agencies and other individuals or organizations who may be interested in affected by the proposed action. This input will be used in the preparation of the draft environmental impact statement (DEIS).

The scoping process includes:

1. Identifying potential issues.
2. Eliminating insignificant issues or those which have been covered by a relevant previous environmental analysis.
3. Exploring additional alternatives.
4. Identifying potential environmental effects of the proposed action and alternatives.
5. Determining potential cooperating agencies and task assignments.

A public field trip to the proposed project area will be announced to the public to discuss issues, alternatives, and mitigations.

The following preliminary issues and alternatives have the been developed.

Issues

(1) Timber harvesting and road construction create soil disturbance which may result in stream sedimentation. Sedimentation may affect water quality, anadromous fisheries habitat, and other aquatic resources. These activities may contribute to existing cumulative watershed effects, occurring from preceding fire impacts and recent salvage logging on private land.

(2) Salvage logging and associated road construction activities could affect the roadless characteristics of the area.

(3) Untreated excess fules could increase the risk of another catastrophic fire that would damage or destroy resource values on public and private land.

(4) Vegetative biodiversity, viability, and recovery rates may be affected by the proposed projects.

Alternatives

(1) No Action. No timber salvage or restoration activities are proposed.

(2) This alternative proposes to salvage approximately 2.6 MMBF of fire

killed sawtimber and 1500 tons of fire killed biomass on approximately 250 acres using tractor and mechanical thinning logging systems. A total of 2.4 milses of road construction would be required.

(3) This alternative proposes to salvage 2.6 MMBF of fire killed timber and 1500 tons of biomass on approximately 250 acres using helicopter logging systems. The purchaser would be required to remove all the 4 inch dbh and larger fire killed trees in excess of wildlife requirements. No new roads would be constructed.

(4) This alternative proposes to salvage 2.6 MMBF of fire killed timber on approximately 250 acres using helicopter logging systems. The purchaser would remove all 10 inch dbh and larger fire killed trees in excess of wildlife requirements. A service contract would thin the sub-merchantable trees and treat excess slash. No new roads would be constructed.

The comment period on the draft environmental impact statement will be 45 days from the date the Environmental Protection Agency publishes the notice of availability in the **Federal Register**. The draft environmental impact statement is expected to be available by March of 1995.

The Forest Service believes, at this early stage, it is important to give reviewer's notice of several court rulings related to public participation in the environmental review process. First, reviewer's of the draft environmental impact statement must structure their participation in the environmental veview of the proposal so that it is meaningful and alerts an agency to the veviewer's position and contentions. *Vermont Yankee Nuclear Power Corp.* v. *NRDC,* 435 U.S. 519, 553 (1978). Also, environmental objections that could have been raised at the draft stage may be waived if not raised until after completion of the final environmental impact statement. *City of Angoon* v. *Hodel,* (9th Circuit, 1986 and *Wisconsin Heritages, Inc.* v. *Harris,* 495 F. Supp. 1334, 1338 (E.D. Wis. 1980). Because of these rulings, it is very important that those interested in this proposed action participate by the close of the 45 day comment period so that substantive comments and objections are made available to the Forest Service at a time when it can meaningful consider them and respond to them in the final environmental impact statement.

To assist the Forest Service in identifying and considering issue and concerns on the proposed action, comments on the drart environmental impact statement should be as specific as possible. It is also helpful if comments refer to specific pages or chapters of the draft statement. Comments may also address the adequacy of the draft environmental impact statement or the merits of the alternatives formulated and discussed in the statement. Reviewers may wish to refer to the Council on Environmental Quality Regulations for implementing the procedural provisions of The National Environmental Policy Act at CFR 1503.3 in addressing these points.

The responsible official for the Forest Service is Michael R. Williams, Dirtrict Ranger, Almanor Ranger District, Lassen National Forest, P.O. Box 767, Chester, California 96020.

Dated: December 22, 1994.

Elizabeth Norton,

Acting Forest Supervisor, Lassen National Forest.

[FR Doc. 95–2670 Filed 2–1–95; 8:45 am]

BILLING CODE 3410–11–M

DEPARTMENT OF COMMERCE

International Trade Administration

[A–357–810]

Preliminary Determination of Sales at Less Than Fair Value and Postponement of Final Determination: Oil Country Tubular Goods From Argentina

AGENCY: Import Administration, International Trade Administration, Department of Commerce.

EFFECTIVE DATE: February 2, 1995.

FOR FURTHER INFORMATION CONTACT: John Beck or Stuart Schaag, Office of Antidumping Investigations, Import Administration, U.S. Department of Commerce, 14th Street and Constitution Avenue, NW., Washington, D.C. 20230; telephone (202) 482–3464 or (202) 482–0192, respectively.

Preliminary Determination

We preliminarily determine that oil country tubular goods (OCTG) from Argentina are being, or are likely to be, sold in the United States at less than fair value, as provided in section 733(b) of the Tariff Act of 1930, as amended (the Act). The estimated margins are shown in the ''Suspension of Liquidation'' section of this notice.

Case History

Since the initiation of this investigation on July 20, 1994 (59 FR 37962, July 26, 1994), the following events have occurred.

On August 15, 1994, the U.S. International Trade Commission (ITC) issued an affirmative preliminary determination.

On August 26, 1994, the Department determined that Siderca S.A.I.C. (Siderca), an Argentine exporter of the subject merchandise, should be the sole recipient of the antidumping questionnaire. This company accounted for at least 60 percent of exports of OCTG from Argentina during the period of investigation (POI).

On August 26, 1994, the Department sent an antidumping duty questionnaire to Siderca. The Department received initial questionnaire responses in September, October and November 1994. The Department received deficiency questionnaire responses in December 1994, and January 1995.

On November 1, 1994, the Department determined that Siderca's home market was not viable within the meaning of section 773(a)(1)(B) of the Act and 19 CFR 353.48, and that the People's Republic of China (PRC) was the appropriate third-country market for this investigation (see the November 1, 1994, memorandum from David L. Binder to Richard W. Moreland). This decision was consistent with our decision not to expand the period of investigation to include home market sales made pursuant to long-term contracts (see the November 3, 1994, memorandum from Richard W. Moreland to Barbara R. Stafford).

On November 10, 1994, Koppel Steel Corporation, U.S. Steel Group (a unit of USX Corporation) and USS/Kobe Steel Company, (the petitioners), timely requested that the Department postpone the preliminary determination in accordance with section 733(c)(1) of the Act (19 U.S.C. 1673b(c)(1)), and 19 CFR 353.15(c). We did so on November 15, 1994 (59 FR 60130, November 22, 1994).

On December 12, 1994, the petitioners submitted an allegation of sales at prices below the cost of production (COP) based on Siderca's sales to the PRC. The Department initiated a COP investigation on January 13, 1995 (see the January 13, 1995, memorandum from Gary Taverman to Barbara R. Stafford).

On December 16, 1994, Siderca timely requested that the final determination be postponed in accordance with 19 CFR 353.20(b) in the event of an affirmative preliminary determination.

Scope of Investigation

For purposes of this investigation, OCTG are hollow steel products of circular cross-section, including oil well casing, tubing, and drill pipe, of iron (other than cast iron) or steel (both

carbon and alloy), whether seamless or welded, whether or not conforming to American Petroleum Institute (API) or non-API specifications, whether finished or unfinished (including green tubes and limited service OCTG products). This investigation does not cover casing, tubing, or drill pipe containing 10.5 percent or more of chromium. The OCTG subject to this investigation is currently classified in the Harmonized Tariff Schedule of the United States (HTSUS) under item numbers: 7304.20.10.00, 7304.20.10.10, 7304.20.10.20, 7304.20.10.30, 7304.20.10.40, 7304.20.10.50, 7304.20.10.60, 7304.20.10.80, 7304.20.20.00, 7304.20.20.10, 7304.20.20.20, 7304.20.20.30, 7304.20.20.40, 7304.20.20.50, 7304.20.20.60, 7304.20.20.80, 7304.20.30.00, 7304.20.30.10, 7304.20.30.20, 7304.20.30.30, 7304.20.30.40, 7304.20.30.50, 7304.20.30.60, 7304.20.30.80, 7304.20.40.00, 7304.20.40.10, 7304.20.40.20, 7304.20.40.30, 7304.20.40.40, 7304.20.40.50, 7304.20.40.60, 7304.20.40.80, 7304.20.50.10, 7304.20.50.15, 7304.20.50.30, 7304.20.50.45, 7304.20.50.50, 7304.20.50.60, 7304.20.50.75, 7304.20.60.10, 7304.20.60.15, 7304.20.60.30, 7304.20.60.45, 7304.20.60.50, 7304.20.60.60, 7304.20.60.75, 7304.20.70.00, 7304.20.80.00, 7304.20.80.30, 7304.20.80.45, 7304.20.80.60, 7305.20.20.00, 7305.20.40.00, 7305.20.60.00, 7305.20.80.00, 7306.20.10.30, 7306.20.10.90, 7306.20.20.00, 7306.20.30.00, 7306.20.40.00, 7306.20.60.10, 7306.20.60.50, 7306.20.80.10, and 7306.20.80.50.

Although the *HTSUS* subheadings are provided for convenience and customs purposes, our written description of the scope of this investigation is dispositive.

Applicable Statute and Regulations

Unless otherwise indicated, all citations to the Statute and to the Department's regulations are in reference to the provisions as they existed on December 31, 1994.

Period of Investigation

The POI is January 1, 1994, through June 30, 1994.

Such or Similar Comparisons

We have determined for purposes of the preliminary determination that the OCTG covered by this investigation comprises a single category of ''such or similar'' merchandise within the meaning of section 771(16) of the Act. Where there were no sales of identical merchandise in the third country to compare to U.S. sales, we made similar merchandise comparisons on the basis of the characteristics listed in Appendix V of the Department's antidumping questionnaire.

The Appendix V criteria were intended to avoid matching casing and tubing products. However, in using the product matches supplied by Siderca, a casing product was matched to a tubing product in two instances. Therefore, we modified the Appendix V criteria to match, whenever possible, U.S. sales of tubing with PRC sales of tubing and U.S. sales of casing with PRC sales of casing, by making that the primary matching criterion.

Thus, we made similar merchandise comparisons on the basis of: (1) Whether OCTG is casing or tubing; (2) whether OCTG is seamless or welded; (3) the grade of OCTG finish; (4) end finish; (5) outside diameter; (6) OCTG length; (7) full-body normalization; and 8) wall thickness (see the January 24, 1995, memorandum from John Beck to David L. Binder for a detailed discussion).

In certain other instances, Siderca did not follow correctly the Department's matching hierarchy instructions. We have corrected the product concordance for these problems (see the January 24, 1995, memorandum from John Beck to David L. Binder for a detailed discussion).

We made adjustments, where appropriate, for differences in the physical characteristics of the merchandise, in accordance with section 773(a)(4)(C) of the Act.

Fair Value Comparisons

To determine whether Siderca's sales of OCTG from Argentina to the United States were made at less than fair value, we compared the United States price (USP) to the foreign market value (FMV), as specified in the ''United States Price'' and ''Foreign Market Value'' sections of this notice.

United States Price

We based USP on exporter's sales price (ESP), in accordance with section 772(c) of the Act, because the subject merchandise was sold to the first unrelated purchaser after importation into the United States.

For OCTG that was further manufactured in the United States, we deducted all value added in the United States, pursuant to section 772(e)(3) of the Act. The value added consists of the costs of the materials, fabrication, and general expenses associated with the portion of the merchandise further manufactured in the United States, as well as a proportional amount of profit attributable to the value added. We accepted Siderca's cost data without making any adjustments for purposes of the preliminary determination. We calculated profit by deducting from the sales price of the finished product all production and selling costs incurred by the company. We then allocated the total profit proportionately to all components of cost. We deducted only the profit attributable to the value added. In determining the costs incurred to produce the finished merchandise, we included: (1) Materials; (02) fabrication; and (3) general expenses including selling (SG&A), and interest expenses.

We calculated ESP based on packed, delivered and ex-U.S. warehouse prices to unrelated customers in the United States. We made deductions from gross unit price, where appropriate, for foreign loading charges, foreign inland freight, ocean freight, marine insurance, U.S. duty, U.S. inland freight, U.S. handling, U.S. brokerage, credit expense and U.S. and Argentine indirect selling expenses, including technical services, inventory carrying costs, and other U.S. and Argentine indirect selling expenses. Finally, we added duty drawback and duties uncollected by reason of exportation.

For certain sales, Siderca had not yet shipped or received payment for the sale. In order to calculate credit expenses, we assigned the average number of credit days when shipment and payment dates were missing, and used the date of the preliminary determination, January 26, 1995, as the assumed payment date when only payment dates were missing (see the January 26, 1995, concurrence memorandum).

Foreign Market Value

We compared the volume of home market sales of subject merchandise to the volume of third-country sales to determine whether there was a sufficient volume of sales in the home market to serve as a viable basis for calculating FMV, in accordance with section 773(a)(1)(B) of the Act. Pursuant to 19 CFR 353.48, we found that the home market was not viable because it represented less than five percent of the amount sold to third countries. We therefore based FMV on third-country sales.

We determined, pursuant to 19 CFR 353.49(b), that the PRC is the most appropriate third-country market because: (1) The volume of Siderca's PRC sales during the POI was the largest of any third country; (2) the merchandise exported to the PRC is

most similar or identical to the merchandise exported to the United States; and (3) Siderca's sales to the PRC were to an OCTG market whose organization and development were similar to that of the U.S. market based on our analysis of the sales and distribution process for those sales. However, petitioner has questioned the legitimacy of certain sales made by Siderca to the Chinese market. The Department intends to scrutinize these sales at verification.

Cost of Production Analysis

Based on the petitioners' allegation that Siderca is selling OCTG in the PRC at prices below its COP, the Department initiated a COP investigation for the PRC sales of Siderca. Although this COP investigation was not initiated until January 13, 1995, Siderca submitted its cost information before this date. The Department was, therefore, able to use this information for purposes of the preliminary determination.

In order to determine whether the third-country prices were above the COP, we calculated the COP based on the sum of Siderca's reported cost of materials, fabrication, general expenses, and packing. We accepted Siderca's cost data without making any adjustments for purposes of the preliminary determination.

Results of COP Analysis

Under our standard practice, where we find that less than 10 percent of a company's sales are at prices below the COP, we disregard any below-cost sales because that company's below-cost sales were not made in substantial quantities. Where we find between 10 and 90 percent of the company's sales were at prices below the COP, and the below-cost sales were made over an extended period of time, we disregard only the below-cost sales. Where we find that more than 90 percent of the company's sales were at prices below the COP, and the sales were made over an extended period of time, we disregard all sales for that product and calculate FMV based on constructed value (CV).

In accordance with section 773(b)(1) of the Act, in order to determine whether below-cost sales were made over an extended period of time, we compare the number of months in which below-cost sales occurred for each product to the number of months in the POI in which that product was sold. If a product was sold in three or more months of the POI, we do not exclude below-cost sales unless there were below-cost sales in at least three months during the POI. When we find that sales of a product only occurred in one or two months, the number of months in which the sales occurred constituted the extended period of time; i.e., where sales of a product were made in only two months, the extended period of time was two months, where sales of a product were made in only one month, the extended period of time was one month (see the Preliminary Results and Partial Termination of Antidumping Duty Administrative Review: Tapered Roller Bearings, Four Inches or Less in Outside Diameter, and Components Thereof, From Japan (58 FR 69336, 69338, December 10, 1993).

Based on this preliminary analysis, none of Siderca's PRC sales were found to be below cost. Accordingly, we calculated FMV based on packed, FOB and C&F prices to unrelated customers in the PRC. In light of the Court of Appeals for the Federal Circuit's (CAFC) decision in *Ad Hoc Committee of AZ–NM–TX–FL Producers of Gray Portland Cement* v. *United States,* Slip. Op. 93–1239 (Fed. Cir., January 4, 1994), the Department no longer can deduct third country market movement charges from FMV pursuant to its inherent power to fill in gaps in the antidumping statute. Instead, we will adjust for those expenses under the circumstance-of sale provision of 19 CFR 353.56(a), as appropriate. Accordingly, in the present case, we deducted from FMV the following direct selling expenses pursuant to 19 CFR 353.56(a): foreign loading charges, foreign inland freight and ocean freight.

We also made deductions from gross unit price, where appropriate, for credit expense, commissions and warranties. We deducted indirect selling expenses, including, where appropriate, technical services, inventory carrying costs and other indirect selling expenses, up to the amount of indirect selling expenses incurred on U.S. sales, in accordance with 19 CFR 353.56(b)(2). We deducted third-country packing costs and added U.S. packing costs. Finally, we added duty drawback and duties uncollected by reason of exportation.

For certain sales, Siderca had not yet shipped or received payment for the sale. In order to calculate credit expenses, we applied the same methodology described above for USP.

Currency Conversion

Because certified exchange rates for Argentina were unavailable from the Federal Reserve, we made currency conversions for expenses denominated in Argentine pesos based on the official monthly exchange rates in effect on the dates of the U.S. sales as published by the International Monetary Fund.

Verification

As provided in section 776(b) of the Act, we will verify the information used in making our final determination.

Suspension of Liquidation

In accordance with section 733(d)(1) (19 U.S.C. 1673b(d)(1)) of the Act, we are directing the Customs Service to suspend liquidation of all entries of OCTG from Argentina, as defined in the ''Scope of Investigation'' section of this notice, that are entered, or withdrawn from warehouse, for consumption on or after the date of publication of this notice in the **Federal Register**.

The Customs Service shall require a cash deposit or posting of a bond equal to the estimated preliminary dumping margin, as shown below. The suspension of liquidation will remain in effect until further notice.

Producer/manufacturer/exporter	Margin percentage
Siderca S.A.I.C	0.61
All others	0.61

Postponement of Final Determination

On December 16, 1994, in accordance with 19 CFR 353.20(b), Siderca requested that, in the event of an affirmative determination, the Department postpone the final determination. We find no compelling reason to deny the request. Accordingly, we are postponing the date of the final determination until not later than 135 days after the date of publication of this notice.

ITC Notification

In accordance with section 733(f) of the Act, we have notified the ITC of our preliminary determination.

If our final determination is affirmative, the ITC will determine whether these imports are materially injuring, or threaten material injury to, the U.S. industry before the later of 120 days after the date of this preliminary determination or 45 days after our final determination.

Public Comment

In accordance with 19 CFR 353.38, case briefs or other written comments in at least ten copies may be submitted by any interested party to the Assistant Secretary for Import Administration no later than April 21, 1995, and rebuttal briefs no later than April 28, 1995. We request that parties in this case provide an executive summary of no more than two pages in conjunction with case briefs on the major issues to be addressed. Further, briefs should

contain a table of authorities. Citations to Commerce determinations and court decisions should include the page number where cited information appears. In preparing the briefs, please begin each issue on a separate page. In accordance with 19 CFR 353.38(b), we will hold a public hearing, if requested, to give interested parties an opportunity to comment on arguments raised in case or rebuttal briefs. Tentatively, the hearing will be held on May 2, 1995, at 10:00 a.m. at the U.S. Department of Commerce, Room 1414, 14th Street and Constitution Avenue, N.W., Washington, D.C. 20230. Parties should confirm the time, date, and place of the hearing 48 hours before the scheduled time.

Interested parties who wish to request a hearing must submit a written request to the Assistant Secretary for Import Administration, U.S. Department of Commerce, Room B–099, within ten days of the publication of this notice in the **Federal Register**. Requests should contain: (1) The party's name, address, telephone number; (2) the number of participants; and (3) a list of the issues to be discussed. In accordance with 19 CFR 353.38(b), oral presentations will be limited to the issues raised in the briefs.

This determination is published pursuant to section 733(f) of the Act (19 U.S.C. 1673b(f)) and 19 CFR 353.15(a)(4).

Dated: January 26, 1995.

Susan G. Esserman,

Assistant Secretary for Import Administration.

[FR Doc. 95–2610 Filed 2–1–95; 8:45 am]

BILLING CODE 3510–DS–P

[A–588–835]

Preliminary Determination of Sales at Less Than Fair Value and Postponement of Final Determination: Oil Country Tubular Goods From Japan

AGENCY: Import Administration, International Trade Administration, Department of Commerce.

EFFECTIVE DATE: February 2, 1995.

FOR FURTHER INFORMATION CONTACT: John Beck or Stuart Schaag, Office of Antidumping Investigations, Import Administration, International Trade Administration, U.S. Department of Commerce, 14th Street and Constitution Avenue, N.W., Washington, D.C., 20230; telephone (202) 482–3464 or (202) 482–0192, respectively.

Preliminary Determination

We preliminarily determine that oil country tubular goods (OCTG) from Japan are being, or are likely to be, sold in the United States at less than fair value, as provided in section 733(b) of the Tariff Act of 1930, as amended (the Act) (19 U.S.C. 1673b).

Case History

Since the initiation of this investigation on July 20, 1994 (59 FR 37962, July 26, 1994), the following events have occurred.

On August 15, 1994, the U.S. International Trade Commission (ITC) issued an affirmative preliminary determination.

In August 1994, the Department requested information regarding manufacturers or exporters of the subject merchandise from the Japanese Ministry of International Trade and Industry (MITI). MITI informed the Department that Nippon Steel Corporation (Nippon) and Sumitomo Metal Industries, Ltd. (Sumitomo) were the main exporters of the subject merchandise, accounting for over 60 percent of Japanese exports to the United States. On August 30, 1994, the Department selected Nippon and Sumitomo as the mandatory respondents in this investigation. These two companies account for at least 60 percent of exports of OCTG from Japan during the period of investigation.

On August 31, 1994, the Import Administration's attaché in Tokyo informed us that Nippon and Sumitomo requested a questionnaire presentation. This questionnaire presentation took place in September 1994, at the MITI office in Tokyo.

On September 21, 1994, Nippon and Sumitomo informed the Department that, due to the complex and burdensome requirements of the Department's questionnaire, they were withdrawing from the investigation.

On November 10, 1994, Koppel Steel Corporation and U.S. Steel Group (a unit of USX Corporation) (the petitioners), timely requested that the Department postpone the preliminary determination, in accordance with section 733(c)(1) of the Act (19 U.S.C. 1673b(c)(1)), and 19 CFR 353.15(c). We did so on November 15, 1994 (59 FR 60130, November 22, 1994).

On January 11, 1995, in accordance with 19 CFR 353.20(b), Sumitomo requested that, due to the complex legal and factual issues in this investigation, the Department postpone the final determination. Nippon made a similar request on January 13, 1995.

Scope of Investigation

For purposes of this investigation, OCTG are hollow steel products of circular cross-section, including oil well casing, tubing, and drill pipe, of iron (other than cast iron) or steel (both carbon and alloy), whether seamless or welded, whether or not conforming to American Petroleum Institute (API) or non-API specifications, whether finished or unfinished (including green tubes and limited service OCTG products). This scope does not cover casing, tubing, or drill pipe containing 10.5 percent or more of chromium. The OCTG subject to this investigation are currently classified in the Harmonized Tariff Schedule of the United States (HTSUS) under item numbers:

7304.20.10.00, 7304.20.10.10, 7304.20.10.20, 7304.20.10.30, 7304.20.10.40, 7304.20.10.50, 7304.20.10.60, 7304.20.10.80, 7304.20.20.00, 7304.20.20.10, 7304.20.20.20, 7304.20.20.30, 7304.20.20.40, 7304.20.20.50, 7304.20.20.60, 7304.20.20.80, 7304.20.30.00, 7304.20.30.10, 7304.20.30.20, 7304.20.30.30, 7304.20.30.40, 7304.20.30.50, 7304.20.30.60, 7304.20.30.80, 7304.20.40.00, 7304.20.40.10, 7304.20.40.20, 7304.20.40.30, 7304.20.40.40, 7304.20.40.50, 7304.20.40.60, 7304.20.40.80, 7304.20.50.10, 7304.20.50.15, 7304.20.50.30, 7304.20.50.45, 7304.20.50.50, 7304.20.50.60, 7304.20.50.75, 7304.20.60.10, 7304.20.60.15, 7304.20.60.30, 7304.20.60.45, 7304.20.60.50, 7304.20.60.60, 7304.20.60.75, 7304.20.70.00, 7304.20.80.00, 7304.20.80.30, 7304.20.80.45, 7304.20.80.60, 7305.20.20.00, 7305.20.40.00, 7305.20.60.00, 7305.20.80.00, 7306.20.10.30, 7306.20.10.90, 7306.20.20.00, 7306.20.30.00, 7306.20.40.00, 7306.20.60.10, 7306.20.60.50, 7306.20.80.10, and 7306.20.80.50

Although the HTSUS subheadings are provided for convenience and customs purposes, our written description of the scope of this investigation is dispositive.

Period of Investigation

The period of investigation (POI) is January 1, 1994, to June 30, 1994.

Applicable Statute and Regulations

Unless otherwise indicated, all citations to the Statute and to the Department's regulations are in reference to the provisions as they existed on December 31, 1994.

Best Information Available

We have determined, in accordance with section 776(c) of the Act (19 U.S.C. 1677e(c)), that the use of best information available (BIA) is appropriate for sales of the subject merchandise in this investigation. In deciding whether to use BIA, section 776(c) provides that the Department shall use BIA when a respondent refuses to produce information requested in a timely manner and in the form required. In this case, exporters of OCTG from Japan declined to respond to our requests for information.

In determining what to use as BIA, the Department follows a two-tiered methodology, whereby the Department normally assigns lower margins to those respondents who cooperate in an investigation, and margins based on more adverse assumptions for those respondents who do not cooperate in an investigation. Given that neither Nippon nor Sumitomo responded to the Department's questionnaire, we find that they have not cooperated in this investigation. In accordance with our BIA methodology for uncooperative respondents, we have assigned these non-responsive companies the highest margin alleged in the petition (see, Antifriction Bearings (Other Than Tapered Roller Bearings) and Parts Thereof From the Federal Republic of Germany: Final Determination of Sales at Less Than Fair Value (54 FR 18992, 19033, May 3, 1989)).

The Department's two-tier methodology for assigning BIA based on the degree of the respondents' cooperation has been upheld by the U.S. Court of Appeals for the Federal Circuit (see Allied-Signal Aerospace Co. v. the United States, Slip Op. 93–1049 (Fed Cir. June 22, 1993); see also Krupp Stahl AG. et. al. v. the United States, Slip Op. 93–84 (CIT May 26, 1993)).

Suspension of Liquidation

In accordance with section 733(d)(1) of the Act (19 U.S.C. 1673b(d)(1)), we are directing the Customs Service to suspend liquidation of all entries of OCTG from Japan, as defined in the ''Scope of Investigation'' section of this notice, that are entered, or withdrawn from warehouse, for consumption on or after the date of publication of this notice in the **Federal Register**. The Customs Service shall require a cash deposit or posting of a bond equal to the estimated preliminary dumping margin, as shown below. The suspension of liquidation will remain in effect until further notice.

Weighted-Average	Manufacturer/Producer/Exporter Margin Percent
Nippon Steel Corporation	44.20
Sumitomo Metal Industries, Ltd.	44.20
All Others	44.20

Postponement of Final Determination

As stated above, both Sumitomo and Nippon requested that the Department postpone the final determination. We find no compelling reason to deny these requests. Accordingly, we are postponing the date of the final determination until not later than 135 days after the date of publication of this notice in the **Federal Register**.

ITC Notification

In accordance with section 733(f) of the Act (19 U.S.C. 1673b(f)), we have notified the ITC of our preliminary determination.

If our final determination is affirmative, the ITC will determine whether these imports are materially injuring, or threaten material injury to, the U.S. industry before the later of 120 days after the date of this preliminary determination or 45 days after our final determination.

Public Comment

In accordance with 19 CFR 353.38, case briefs or other written comments in at least ten copies must be submitted to the Assistant Secretary for Import Administration by no later than April 21, 1995, and rebuttal briefs by no later that April 28, 1995. We request that parties in this case provide an executive summary of no more than two pages in conjunction with case briefs on the major issues to be addressed. Further, briefs should contain a table of authorities. Citations to Commerce determinations and court decisions should include the page number where cited information appears. In preparing the briefs, please begin each issue on a separate page. In accordance with 19 CFR 353.38(b), we will hold a public hearing, if requested, to give interested parties an opportunity to comment on arguments raised in case or rebuttal briefs. Tentatively, the hearing will be held on May 3, 1995, at 10:00 a.m. at the U.S. Department of Commerce, Room 1414, 14th Street and Constitution Avenue, N.W., Washington, D.C. 20230. Parties should confirm by telephone, the time, date, and place of the hearing 48 hours before the scheduled time.

Interested parties who wish to request a hearing must submit a written request to the Assistant Secretary for Import Administration, U.S. Department of Commerce, Room B–099, within ten days of the publication of this notice in the **Federal Register**. Requests should contain: (1) The party's name, address, and telephone number; (2) the number of participants; and (3) a list of the issues to be discussed. In accordance with 19 CFR 353.38(b), oral presentations will be limited to issues raised in the briefs.

This notice is published pursuant to section 733(f) of the Act (19 U.S.C. 1673b(f)) and 19 CFR 353.15(a)(4).

Dated: January 25, 1995.

Paul L. Joffe,

Deputy Assistant Secretary for Import Administration.

[FR Doc. 95–2613 Filed 2–1–95; 8:45 am]

BILLING CODE 3510–DS–P

[A–580–825]

Preliminary Determination of Sales at Less Than Fair Value and Postponement of Final Determination: Oil Country Tubular Goods From Korea

AGENCY: Import Administration, International Trade Administration, Department of Commerce.

EFFECTIVE DATE: February 2, 1995.

FOR FURTHER INFORMATION CONTACT: John Beck or Jennifer Stagner, Office of Antidumping Investigations, Import Administration, U.S. Department of Commerce, 14th Street and Constitution Avenue NW., Washington, DC 20230; telephone (202) 482–3464 or (202) 482–1673, respectively.

Preliminary Determination

We preliminarily determine that oil country tubular goods (OCTG) from Korea are being, or are likely to be, sold in the United States at less than fair value, as provided in section 733(b) of the Tariff Act of 1930, as amended (the Act). The estimated margins are shown in the ''Suspension of Liquidation'' section of this notice.

Case History

Since the initiation of this investigation on July 20, 1994 (59 FR 37962, July 26, 1994), the following events have occurred.

On August 15, 1994, the U.S. International Trade Commission (ITC) issued an affirmative preliminary determination.

On August 26, 1994, the Department determined that Hyundai Steel Pipe Company, Ltd. (HSP) and Union Steel Manufacturing Company, Ltd. (Union), Korean exporters of the subject merchandise, were the appropriate recipients of the antidumping duty questionnaire. These two companies

accounted for at least 60 percent of exports of OCTG from Korea during the period of investigation.

On August 26, 1994, the Department sent antidumping duty questionnaires to HSP and Union pursuant 19 CFR 353.42(b)(1). On September 9, 1994, Union informed the Department that it would not be responding to the Department's questionnaire due to resource constraints.

The Department received HSP's questionnaire responses in September and October 1994 and in January 1995. The Department received deficiency questionnaire responses in October and November 1994.

On September 29, 1994, the Department determined that HSP's home market was not viable within the meaning of 773(a)(1)B of the Act and 19 CFR 353.48 and that Canada was the appropriate third-country market for this investigation.

On October 17, 1994, and November 3, 1994, the petitioners alleged that HSP was selling OCTG to Canada at less than its cost of production (COP). On November 28, 1994, the Department initiated a COP investigation against HSP (see the November 28, 1994, memorandum from Richard W. Moreland to Barbara R. Stafford).

On November 10, 1994, Maverick Tube Corp., Bellville Tube Corp., and IPSCO Steel Pipe Inc. (the petitioners), made a timely request that the Department postpone the preliminary determination in accordance with section 733(c)(1) of the Act (19 U.S.C. 1673b(c)(1)), and 19 CFR 353.15(c). We did so on November 15, 1994 (59 FR 60130, November 22, 1994).

On January 12, 1995, HSP requested that the final determination be postponed in accordance with 19 CFR 353.20(b) in the event of an affirmative preliminary determination.

Scope of Investigation

For purposes of this investigation, OCTG are hollow steel products of circular cross-section, including oil well casing, tubing, and drill pipe, of iron (other than cast iron) or steel (both carbon and alloy), whether seamless or welded, whether or not conforming to American Petroleum Institute (API) or non-API specifications, whether finished or unfinished (including green tubes and limited service OCTG products). This investigation does not cover casing, tubing, or drill pipe containing 10.5 percent or more of chromium. The OCTG subject to this investigation is currently classified in the Harmonized Tariff Schedule of the United States (HTSUS) under item numbers: 7304.20.10.00, 7304.20.10.10, 7304.20.10.20, 7304.20.10.30, 7304.20.10.40, 7304.20.10.50, 7304.20.10.60, 7304.20.10.80, 7304.20.20.00, 7304.20.20.10, 7304.20.20.20, 7304.20.20.30, 7304.20.20.40, 7304.20.20.50, 7304.20.20.60, 7304.20.20.80, 7304.20.30.00, 7304.20.30.10, 7304.20.30.20, 7304.20.30.30, 7304.20.30.40, 7304.20.30.50, 7304.20.30.60, 7304.20.30.80, 7304.20.40.00, 7304.20.40.10, 7304.20.40.20, 7304.20.40.30, 7304.20.40.40, 7304.20.40.50, 7304.20.40.60, 7304.20.40.80, 7304.20.50.10, 7304.20.50.15, 7304.20.50.30, 7304.20.50.45, 7304.20.50.50, 7304.20.50.60, 7304.20.50.75, 7304.20.60.10, 7304.20.60.15, 7304.20.60.30, 7304.20.60.45, 7304.20.60.50, 7304.20.60.60, 7304.20.60.75, 7304.20.70.00, 7304.20.80.00, 7304.20.80.30, 7304.20.80.45, 7304.20.80.60, 7305.20.20.00, 7305.20.40.00, 7305.20.60.00, 7305.20.80.00, 7306.20.10.30, 7306.20.10.90, 7306.20.20.00, 7306.20.30.00, 7306.20.40.00, 7306.20.60.10, 7306.20.60.50, 7306.20.80.10, and 7306.20.80.50.

Although the HTSUS subheadings are provided for convenience and customs purposes, our written description of the scope of this investigation is dispositive.

Period of Investigation

The period of investigation (POI) is January 1, 1994, through June 30, 1994.

Applicable Statute and Regulations

Unless otherwise indicated, all citations to the Statute and to the Department's regulations are in reference to the provisions as they existed on December 31, 1994.

Best Information Available

We have determined, in accordance with section 776(c) of the Act (19 U.S.C. 1677e(c)), that the use of best information available (BIA) is appropriate for sales of the subject merchandise by Union. In deciding whether to use BIA, section 353.37(b) provides that the Department may take into account whether a party refused or was unable to produce information in a timely manner. In this case, Union refused to provide the information requested.

In determining what to use as BIA, the Department follows a two-tiered methodology whereby the Department normally assigns lower margins to those respondents who cooperate in an investigation, and margins based on more adverse assumptions for those respondents who do not cooperate in an investigation.

In this case, because Union failed to respond to the Department's questionnaire, we find that it has not cooperated in this investigation. Accordingly, under our BIA methodology, uncooperative respondents are assigned the higher of the highest margin alleged in the petition or the highest rate calculated for another respondent. In this instance, we are assigning the highest margin among the margins alleged in the petition (see, Antifriction Bearings (Other Than Tapered Roller Bearings) and Parts Thereof From the Federal Republic of Germany: Final Determination of Sales at Less Than Fair Value (54 FR 18992, 19033, May 3, 1989)). The Department's two-tier methodology for assigning BIA based on the degree of the respondents' cooperation has been upheld by the U.S. Court of Appeals for the Federal Circuit (see *Allied-Signal Aerospace Co.* v. *the United States,* Slip Op. 93–1049 (Fed Cir. June 22, 1993); see also *Krupp Stahl AG. et al* v. *the United States,* Slip Op. 93–84 (CIT May 26, 1993)).

Such or Similar Comparisons

We have determined for purposes of the preliminary determination that the OCTG covered by this investigation comprises a single category of ''such or similar'' merchandise within the meaning of section 771(16) of the Act. All comparisons of U.S. to third-country sales involved identical merchandise.

Fair Value Comparisons

To determine whether HSP's sales of OCTG from Korea to the United States were made at less than fair value, we compared the United States price (USP) to the foreign market value (FMV), as specified in the ''United States Price'' and ''Foreign Market Value'' sections of this notice.

United States Price

We based USP on exporter's sales price (ESP), in accordance with section 772(c) of the Act, because the subject merchandise was sold to the first unrelated purchaser after importation into the United States.

We calculated ESP based on packed, ex-U.S. warehouse prices to unrelated customers in the United States. We made deductions from gross unit price, where appropriate, for foreign brokerage charges, foreign inland freight, ocean freight, marine insurance, U.S. duty, U.S. inland freight, U.S. brokerage, wharfage fees, credit expense, and U.S. and foreign indirect selling expenses, including inventory carrying costs and

other U.S. and foreign indirect selling expenses. We added duty drawback in accordance with section 772(d)(1)(B) of the Act.

Foreign Market Value

We compared the volume of home market sales of subject merchandise to the volume of third-country sales to determine whether there was a sufficient volume of sales in the home market to serve as a viable basis for calculating FMV, in accordance with section 773(a)(1)(B) of the Act. Pursuant to 19 CFR 353.48, we found that the home market was not viable because it represented less than five percent of the amount sold to third countries. We, therefore, based FMV on third-country sales. We selected Canada as the third-country market because Canada was the only third country to which HSP sold the subject merchandise and the sales to this market were greater than five percent of the sales made to the United States.

Cost of Production Analysis

As stated above, based on the petitioners' allegation that HSP was selling OCTG in Canada at prices below its COP, the Department initiated a COP investigation.

In order to determine whether the third-country prices were above HSP's COP, we calculated the COP based on the sum of HSP's cost of materials, fabrication, general expenses, and packing, in accordance with section 353.51(c). We accepted HSP's cost data for purposes of the preliminary determination.

Results of COP Analysis

Under our standard practice, where we find that less than 10 percent of a company's sales are at prices below the COP, we disregard any below-cost sales because that company's below-cost sales were not made in substantial quantities. Where we find between 10 and 90 percent of the company's sales of a given product were at prices below the COP, and the below cost sales were made over an extended period of time, we disregard only the below-cost sales. Where we find that more than 90 percent of the company's sales were at prices below the COP, and the sales were made over an extended period of time, we disregard all sales for that product and calculate FMV based on constructed value (CV).

In accordance with section 773(b)(1) of the Act, in order to determine whether below-cost sales were made over an extended period of time, we compare the number of months in which below-cost sales occurred for each product to the number of months in the POI in which that product was sold. If a product was sold in three or more months of the POI, we do not exclude below-cost sales unless there were below-cost sales in at least three months during the POI. When we find that sales of a product only occurred in one or two months, the number of months in which the sales occurred constituted the extended period of time; i.e., where sales of a product were made in only two months, the extended period of time was two months, where sales of a product were made in only one month, the extended period of time was one month (see the Preliminary Results and Partial Termination of Antidumping Duty Administrative Review: Tapered Roller Bearings, Four Inches or Less in Outside Diameter, and Components Thereof, From Japan (58 FR 69336, 69338, December 10, 1993).

Based on this preliminary analysis, none of HSP's Canadian sales were found to be below cost. Accordingly, we calculated FMV based on C&F prices to unrelated customers in Canada. We made deductions from gross unit price for foreign brokerage charges, foreign inland freight, ocean freight, other expenses and credit expense. In addition, we deducted indirect selling expenses, including, where appropriate, inventory carrying costs and other indirect selling expenses, up to the amount of indirect selling expenses incurred on U.S. sales, in accordance 19 CFR 353.56(b)(2). We deducted third-country packing costs and added U.S. packing costs. Finally, we added duty drawback.

Currency Conversion

Pursuant to 19 CFR 353.60, we made currency conversions based on the official exchange rates in effect on the dates of the U.S. sales as certified by the Federal Reserve Bank.

Verification

As provided in section 776(b) of the Act, we will verify the information used in making our final determination.

Suspension of Liquidation

In accordance with section 733(d)(1) (19 U.S.C. 1673b(d)(1)), of the Act, we are directing the Customs Service to suspend liquidation of all entries of OCTG from Korea, as defined in the ''Scope of Investigation'' section of this notice, that are entered, or withdrawn from warehouse, for consumption on or after the date of publication of this notice in the **Federal Register**.

The Customs Service shall require a cash deposit or posting of a bond equal to the estimated preliminary dumping margin, as shown below. The suspension of liquidation will remain in effect until further notice.

Producer/Manufacturer/Exporter	Margin percentage
Hyundai Steel Pipe Company, Ltd. ..	00.00
Union Steel Manufacturing Company	12.17
All Others	12.17

Postponement of Final Determination

On January 12, 1995, in accordance with 19 CFR 353.20(b), HSP requested that, in the event of an affirmative determination, the Department postpone the final determination. We find no compelling reason to deny the request. Accordingly, we are postponing the date of the final determination until not later than 135 days after the date of publication of this notice.

ITC Notification

In accordance with section 733(f) of the Act, we have notified the ITC of our preliminary determination.

If our final determination is affirmative, the ITC will determine whether these imports are materially injuring, or threaten material injury to, the U.S. industry before the later of 120 days after the date of this preliminary determination or 45 days after our final determination.

Public Comment

In accordance with 19 CFR 353.38, case briefs or other written comments in at least ten copies may be submitted by any interested party to the Assistant Secretary for Import Administration no later than April 21, 1995, and rebuttal briefs no later than April 28, 1995. We request that parties in this case provide an executive summary of no more than two pages in conjunction with case briefs on the major issues to be addressed. Further, briefs should contain a table of authorities. Citations to Commerce determinations and court decisions should include the page number where cited information appears. In preparing the briefs, please begin each issue on a separate page. In accordance with 19 CFR 353.38(b), we will hold a public hearing, if requested, to give interested parties an opportunity to comment on arguments raised in case or rebuttal briefs. Tentatively, the hearing will be held on May 3, 1995, at 10:00 a.m. at the U.S. Department of Commerce, Room 1851, 14th Street and Constitution Avenue, N.W., Washington, D.C. 20230. Parties should confirm the time, date, and place of the hearing 48 hours before the scheduled time.

Interested parties who wish to request a hearing must submit a written request to the Assistant Secretary for Import Administration, U.S. Department of Commerce, Room B–099, within ten days of the publication of this notice in the **Federal Register**. Requests should contain: (1) The party's name, address, telephone number; (2) the number of participants; and (3) a list of the issues to be discussed. In accordance with 19 CFR 353.38(b), oral presentations will be limited to the issues raised in the briefs.

This determination is published pursuant to section 733(f) of the Act (19 U.S.C. 1673b(f)) and 19 CFR 353.15(a)(4).

Dated: January 26, 1995.

Susan G. Esserman,

Assistant Secretary for Import Administration.

[FR Doc. 95–2614 Filed 2–1–95; 8:45 am]

BILLING CODE 3510–DS–P

[A–201–817]

Preliminary Determination of Sales at Not Less Than Fair Value: Oil Country Tubular Goods From Mexico

AGENCY: Import Administration, International Trade Administration, Department of Commerce.

EFFECTIVE DATE: February 2, 1995.

FOR FURTHER INFORMATION CONTACT: Jennifer Stagner or John Beck, Office of Antidumping Investigations, Import Administration, International Trade Administration, U.S. Department of Commerce, 14th Street and Constitution Avenue, N.W., Washington, D.C. 20230; telephone (202) 482–1673 and (202) 482–3464, respectively.

Preliminary Determination

The Department preliminarily determines that oil country tubular goods (OCTG) from Mexico are not being sold in the United States at less than fair value, as provided in section 733(b) of the Tariff Act of 1930, as amended (the Act). We have calculated a preliminary margin of zero percent for Mexican OCTG sold in the United States during the period of investigation.

Case History

Since the initiation of this investigation on July 20, 1994, (59 FR 37962, July 26, 1994), the following events have occurred.

On August 15, 1994, the U.S. International Trade Commission (ITC) issued an affirmative preliminary determination.

On August 26, 1994, based on statements from the petitioner and information from Metal Bulletin Books, Ltd., Iron and Steel Works of the World (10th ed. 1991), the Department issued a full antidumping questionnaire to Tubos de Acero de Mexico, S.A. (TAMSA). Additionally, the Department issued antidumping surveys to three other potential respondents: Tubacero S.A. de C.V. and Hylsa, S.A. de C.V. on August 26, 1994; and, Villacero Tuberia Nacional, S.A. de C.V. on September 1, 1994.

On September 27, 1994, the Department determined that TAMSA would be the sole mandatory respondent (see the September 27, 1994, memorandum from David L. Binder to Richard W. Moreland). TAMSA accounts for at least 60 percent of exports of OCTG from Mexico during the period of investigation

The Department received initial questionnaire responses in September, October, and November 1994, and deficiency responses in November and December 1994.

On November 3, 1994, the Department determined that TAMSA's home market was not viable within the meaning of section 773(a)(1)(B) of the Act and 19 CFR 353.48 and that Saudi Arabia was the appropriate third country market for this investigation (see the November 3, 1994, memorandum from David L. Binder to Richard W. Moreland). This decision was predicated on the decision not to expand the period of investigation to include home market sales made pursuant to long-term contracts (see the November 3, 1994, memorandum from Richard W. Moreland to Barbara R. Stafford).

On November 10, 1994, North Star Steel Ohio (the petitioner) timely requested that the Department postpone the preliminary determination in accordance with section 733(c)(1) of the Act (19 U.S.C. 1673b(c)(1)) and 19 CFR 353.15(c). We did so on November 15, 1994, (59 FR 60130, November 22, 1994).

On November 29, 1994, the petitioner submitted an allegation of sales at prices below the cost of production (COP) based on TAMSA's sales to Saudi Arabia. The Department initiated a COP investigation on December 22, 1994 (see the December 22, 1994, memorandum from Gary Taverman to Barbara R. Stafford). On December 28, 1994, the Department sent a section D questionnaire to the respondent. However, due to time constraints, we have not been able to use the section D questionnaire response in our preliminary determination.

On December 16, 1994, in accordance with 19 CFR 353.20(b), TAMSA requested that, in the event of an affirmative preliminary determination by the Department, the Department postpone the final determination. However, because this preliminary determination is negative, the criteria for a postponement of the final determination under 19 CFR 353.20(b)(1) have not been met. Accordingly, the final determination has not been postponed.

Scope of Investigation

For purposes of this investigation, OCTG are hollow steel products of circular cross-section, including oil well casing, tubing, and drill pipe, of iron (other than cast iron) or steel (both carbon and alloy), whether seamless or welded, whether or not conforming to American Petroleum Institute (API) or non-API specifications, whether finished or unfinished (including green tubes and limited service OCTG products). This investigation does not cover casing, tubing, or drill pipe containing 10.5 percent or more of chromium. The OCTG subject to this investigation are currently classified in the Harmonized Tariff Schedule of the United States (HTSUS) under item numbers:

7304.20.10.00, 7304.20.10.10, 7304.20.10.20, 7304.20.10.30, 7304.20.10.40, 7304.20.10.50, 7304.20.10.60, 7304.20.10.80, 7304.20.20.00, 7304.20.20.10, 7304.20.20.20, 7304.20.20.30, 7304.20.20.40, 7304.20.20.50, 7304.20.20.60, 7304.20.20.80, 7304.20.30.00, 7304.20.30.10, 7304.20.30.20, 7304.20.30.30, 7304.20.30.40, 7304.20.30.50, 7304.20.30.60, 7304.20.30.80, 7304.20.40.00, 7304.20.40.10, 7304.20.40.20, 7304.20.40.30, 7304.20.40.40, 7304.20.40.50, 7304.20.40.60, 7304.20.40.80, 7304.20.50.10, 7304.20.50.15, 7304.20.50.30, 7304.20.50.45, 7304.20.50.50, 7304.20.50.60, 7304.20.50.75, 7304.20.60.10, 7304.20.60.15, 7304.20.60.30, 7304.20.60.45, 7304.20.60.50, 7304.20.60.60, 7304.20.60.75, 7304.20.70.00, 7304.20.80.00, 7304.20.80.30, 7304.20.80.45, 7304.20.80.60, 7305.20.20.00, 7305.20.40.00, 7305.20.60.00, 7305.20.80.00, 7306.20.10.30, 7306.20.10.90, 7306.20.20.00, 7306.20.30.00, 7306.20.40.00, 7306.20.60.10, 7306.20.60.50, 7306.20.80.10, and 7306.20.80.50.

Although the HTSUS subheadings are provided for convenience and customs purposes, our written description of the scope of these investigations is dispositive.

Period of Investigation

The period of investigation (POI) is January 1, 1994, through June 30, 1994.

Applicable Statute and Regulations

Unless otherwise indicated, all citations to the Statute and to the Department's regulations are in reference to the provisions as they existed on December 31, 1994.

Such or Similar Comparisons

We have determined for purposes of the preliminary determination that OCTG covered by this investigation comprises a single category of ''such or similar'' merchandise within the meaning of section 771(16) of the Act. Where there were no sales of identical merchandise in the third country to compare to U.S. sales, we made similar merchandise comparisons on the basis of: (1) Seamless or welded; (2) grade; (3) end finish; (4) outside diameter; (5) length; (6) normalization; and (7) wall thickness, as listed in Appendix V of the Department's antidumping questionnaire. We made adjustments, where appropriate, for differences in the physical characteristics of the merchandise, in accordance with section 773(a)(4)(C) of the Act.

Fair Value Comparisons

To determine whether TAMSA's sales of OCTG from Mexico to the United States were made at less than fair value, we compared the United States price (USP) to the foreign market value (FMV), as specified in the ''United States Price'' and ''Foreign Market Value'' sections of this notice.

United States Price

We based USP for some U.S. sales on purchase price, in accordance with section 772(b) of the Act, because the subject merchandise was sold to unrelated purchasers in the United States prior to importation and there was no other indication that exporter's sales price (ESP) methodology should be used. However, where certain sales to the first unrelated purchaser took place after importation into the United States, we based USP on ESP, in accordance with section 772(c) of the Act.

We have preliminarily determined that the sales of further manufactured merchandise classified by respondent as purchase price sales were, instead, ESP sales because: (1) The further manufacturing of the OCTG was performed by a related U.S. entity; and (2) the merchandise was stored in TAMSA's related U.S. entity's stockyard prior to further manufacturing. It is the Department's practice to treat sales made prior to importation that undergo further manufacturing in the United States as ESP sales when the sales are handled by a related U.S. entity (see Final Determination of Sales at Less Than Fair Value: New Minivans from Japan (57 FR 21937, May 26, 1992)).

For OCTG that was further manufactured in the United States, we deducted all value added in the United States, pursuant to section 772(e)(3) of the Act. The value added consists of the costs of the materials, fabrication, and general expenses associated with the portion of the merchandise further manufactured in the United States, as well as a proportional amount of profit attributable to the value added. We accepted TAMSA's cost data without making any adjustments for purposes of the preliminary determination. We calculated profit by deducting from the sales price of the finished product all production and selling costs incurred by the company. We then allocated the total profit proportionately to all components of costs. We deducted only the profit attributable to the value added. In determining the costs incurred to produce the finished merchandise, we included: (1) Materials; (2) fabrication; and (3) general expenses including selling (SG&A), and interest expense, in accordance with 19 CFR 353.41(e)(3).

We calculated purchase price and ESP based on FOB prices. For purchase price and ESP sales, we made deductions from gross unit price, where appropriate for foreign brokerage, foreign inland freight, marine insurance, ocean freight, U.S. duty, U.S. inland freight, U.S. brokerage, and load-in/load-out expenses, in accordance with section 772(d) of the Act.

For ESP sales only, we deducted credit expenses, quality inspection costs, indirect selling expenses, inventory carrying costs, and product liability premiums, in accordance with section 772(e) of the Act.

We made no adjustments for packing because the respondent reported that the OCTG was not packed before shipment.

For certain sales, TAMSA had not yet shipped or received payment for the sale. In order to calculate credit expenses, we assigned the average number of credit days when shipment and payment dates were missing, and used the date of the preliminary determination, January 26, 1995, as the assumed payment date when only payment dates were missing (see the January 26, 1995, concurrence memorandum).

Foreign Market Value

We compared the volume of home market sales of subject merchandise to the volume of third country sales to determine whether there was a sufficient volume of sales in the home market to serve as a viable basis for calculating FMV in accordance with 19 CFR 353.48(a). Pursuant to 19 CFR 353.48, we found that the home market was not viable because it represented less than five percent of the amount sold to third countries. We therefore based FMV on third country sales.

We determined, pursuant to 19 CFR 353.49(b), that Saudi Arabia is the most appropriate third country market because: (1) The volume of TAMSA's Saudi Arabian sales during the POI was the largest of any third country; (2) the merchandise exported to Saudi Arabia is most similar or identical to the merchandise exported to the United States; and (3) the Saudi Arabian market, in terms of organization and development, is similar to that of the U.S. market. However, the petitioner has questioned the legitimacy of certain sales made by TAMSA to the Saudi Arabian market. The Department intends to scrutinize these sales at verification.

We calculated FMV based on C&F prices to unrelated customers in Saudi Arabia. In light of the Court of Appeals for the Federal Circuit's (CAFC) decision in *Ad Hoc Committee of AZ–NM–TX–FL Producers of Gray Portland Cement* v. *United States,* Slip. Op. 93–1239 (Fed. Cir., January 4, 1994), the Department no longer can deduct third country market movement charges from FMV pursuant to its inherent power to fill in gaps in the antidumping statute. Instead, we will adjust for those expenses under the circumstance-of-sale provision of 19 CFR 353.56(a), as appropriate. Accordingly, in the present case, we deducted from FMV the following direct selling expenses pursuant to 19 CFR 353.56(a): Post-sale foreign brokerage, foreign inland freight, and ocean freight expenses.

For purchase price comparisons, pursuant to section 773(a)(4)(B) of the Act and 19 CFR 353.56(a)(2), we made circumstance-of-sale adjustments for direct selling expenses, which included credit and commissions, in accordance with 19 CFR 353.56(a)(2). We deducted commissions incurred on third country sales and added U.S. indirect selling expenses, capped by the amount of third country commissions. Total U.S. indirect selling expenses included U.S. inventory carrying costs, indirect selling expenses incurred in Mexico on U.S. sales and expenses incurred in the

United States, quality inspection costs, and product liability premiums.

For ESP comparisons, we made further deductions for credit expense and commissions. We deducted third country indirect selling expenses, capped by the amount of U.S. indirect selling expenses, in accordance with 19 CFR 353.56(b).

We made no adjustments for packing because the respondent reported that the OCTG was not packed before shipment.

For certain sales, TAMSA had not yet shipped or received payment for the sale. In order to calculate credit expenses, we applied the same methodology described above for USP.

Currency Conversion

Because certified exchange rates for Mexico were unavailable from the Federal Reserve, we made currency conversions for expenses denominated in Mexican pesos based on the official monthly exchange rates in effect on the dates of the U.S. sales as published by the International Monetary Fund.

Verification

As provided in section 776(b) of the Act, we will verify the information used in making our final determination.

Preliminary Margin Calculation

Based on the calculation methodology outlined above, we preliminarily calculated the following margins:

Manufacturer/producer/exporter	Margin Percentage
Tubos de Acero de Mexico, S.A	00.00
All others	00.00

ITC Notification

In accordance with section 733(f) of the Act, we have notified the ITC of our preliminary determination.

If our final determination is affirmative, the ITC will determine whether these imports are materially injuring, or threaten material injury to, a U.S. industry before the later of 120 days after the date of this preliminary determination or 45 days after our final determination.

Public Comment

In accordance with 19 CFR 353.38, case briefs or other written comments in at least ten copies may be submitted by any interested party to the Assistant Secretary for Import Administration no later than March 6, 1995, and rebuttal briefs no later than March 13, 1995. We request that parties in this case provide an executive summary of no more than two pages in conjunction with case briefs on the major issues to be addressed. Further, briefs should contain a table of authorities. Citations to Commerce determinations and court decisions should include the page number where cited information appears. In preparing the briefs, please begin each issue on a separate page. In accordance with 19 CFR 353.38(b), we will hold a public hearing, if requested, to give interested parties an opportunity to comment on arguments raised in case or rebuttal briefs. Tentatively, the hearing will be held on March 20, 1995, at 10:00 a.m. at the U.S. Department of Commerce, Room 1851, 14th Street and Constitution Avenue, N.W., Washington, D.C. 20230. Parties should confirm the time, date, and place of the hearing 48 hours before the scheduled time.

Interested parties who wish to request a hearing must submit a written request to the Assistant Secretary for Import Administration, U.S. Department of Commerce, Room B–099, within ten days of the publication of this notice in the **Federal Register**. Requests should contain: (1) The party's name, address, telephone number; (2) the number of participants; and (3) a list of the issues to be discussed. In accordance with 19 CFR 353.38(b), oral presentations will be limited to the issues raised in the briefs. This determination is published pursuant to section 733(f) of the Act (19 U.S.C. 1673b(f)) and 19 CFR 353.15(a)(4).

Dated: January 26, 1995.

Susan G. Esserman,

Assistant Secretary for Import Administration.

[FR Doc. 95–2615 Filed 2–1–95; 8:45 am]

BILLING CODE 3510–DS–P

[A–433–805]

Preliminary Determination of Sales at Less Than Fair Value and Postponement of Final Determination: Oil Country Tubular Goods From Austria

AGENCY: Import Administration, International Trade Administration, Department of Commerce.

EFFECTIVE DATE: February 2, 1995.

FOR FURTHER INFORMATION CONTACT: William Crow or Lisa Girardi, Office of Antidumping Investigations, Import Administration, U.S. Department of Commerce, 14th Street and Constitution Avenue, N.W., Washington, D.C. 20230; telephone (202) 482–0116 or (202) 482–4105, respectively.

Preliminary Determination

We preliminarily determine that oil country tubular goods (OCTG) from Austria are being sold in the United States at less than fair value, as provided in section 733(b) of the Tariff Act of 1930, as amended (the Act). The estimated margins are shown in the ''Suspension of Liquidation'' section of this notice.

Case History 1

Since the initiation of this investigation on July 27, 1994 (59 FR 37962, July 20, 1994), the following events have occurred.

On August 15, 1994, the U.S. International Trade Commission (ITC) issued an affirmative preliminary injury determination in this proceeding (see ITC Investigation No. 701–TA–363).

On August 26, 1994, the Department of Commerce (the Department) selected Voest-Alpine Stahlrohr Kindberg GmbH (Kindberg) as the sole mandatory respondent in the investigation, within the meaning of 19 CFR 353.42(b)(1), since this respondent accounts for at least 60 percent of exports of OCTG from Austria during the period of investigation (see the August 26, 1994, memorandum from David L. Binder to Richard W. Moreland, for more detailed information). Also that day, the Department issued an antidumping questionnaire to Kindberg.

On October 5, 1994, the Department determined that Kindberg's home market was not viable and determined that Russia was the appropriate third country market for this investigation (see the October 5, 1994, memorandum from David L. Binder to Richard W. Moreland). In their June 30, 1994, petition, the petitioners alleged that Kindberg's sales to Russia are at prices below the cost of production (COP). In our notice of initiation the Department stated that, based on the allegation in the petition, if there were not a viable home market for Kindberg, the Department would commence an investigation of sales below the cost of production with respect to third country sales. In the above-referenced October 5, 1994, decision memorandum, the Department determined that since Russian sales were the proper basis for FMV, the Department would investigate whether such sales were made below COP.

The Department received initial questionnaire responses in September and October 1994 and deficiency responses in November and December 1994. The Department issued additional deficiency letters on January 9 and January 23, 1995. The responses to these letters are due on January 27, 1995, after the preliminary determination.

On November 10, 1994, Koppel Steel Corporation, U.S. Steel Group (a unit of

USX Corporation) and USS/Kobe Steel Company, (the petitioners), timely requested that the Department postpone the preliminary determination in accordance with section 733(c)(1) of the Act (19 U.S.C. 1673b(c) (1)), and 19 CFR 353.15(c). We did so on November 15, 1994 (59 FR 60130, November 22, 1994).

On January 25, 1995, Kindberg requested that, in the event of an affirmative preliminary determination, the Department postpone the final determination in accordance with 19 CFR 353.20(b)(1).

Scope of Investigation

For purposes of this investigation, OCTG are hollow steel products of circular cross-section, including oil well casing, tubing, and drill pipe, of iron (other than cast iron) or steel (both carbon and alloy), whether seamless or welded, whether or not conforming to American Petroleum Institute (API) or non-API specifications, whether finished or unfinished (including green tubes and limited service OCTG products). This scope does not cover casing, tubing, or drill pipe containing 10.5 percent or more of chromium. The OCTG subject to this investigation are currently classified in the *Harmonized Tariff Schedule of the United States* (HTS) under item numbers:

7304.20.10.00, 7304.20.10.10, 7304.20.10.20, 7304.20.10.30, 7304.20.10.40, 7304.20.10.50, 7304.20.10.60, 7304.20.10.80, 7304.20.20.00, 7304.20.20.10, 7304.20.20.20, 7304.20.20.30, 7304.20.20.40, 7304.20.20.50, 7304.20.20.60, 7304.20.20.80, 7304.20.30.00, 7304.20.30.10, 7304.20.30.20, 7304.20.30.30, 7304.20.30.40, 7304.20.30.50, 7304.20.30.60, 7304.20.30.80, 7304.20.40.00, 7304.20.40.10, 7304.20.40.20, 7304.20.40.30, 7304.20.40.40, 7304.20.40.50, 7304.20.40.60, 7304.20.40.80, 7304.20.50.10, 7304.20.50.15, 7304.20.50.30, 7304.20.50.45, 7304.20.50.50, 7304.20.50.60, 7304.20.50.75, 7304.20.60.10, 7304.20.60.15, 7304.20.60.30, 7304.20.60.45, 7304.20.60.50, 7304.20.60.60, 7304.20.60.75, 7304.20.70.00, 7304.20.80.00, 7304.20.80.30, 7304.20.80.45, 7304.20.80.60, 7305.20.20.00, 7305.20.40.00, 7305.20.60.00, 7305.20.80.00, 7306.20.10.30, 7306.20.10.90, 7306.20.20.00, 7306.20.30.00, 7306.20.40.00, 7306.20.60.10, 7306.20.60.50, 7306.20.80.10, and 7306.20.80.50.

Although the *HTSUS* subheadings are provided for convenience and customs purposes, our written description of the scope of this investigation is dispositive.

Period of Investigation

The period of investigation (POI) is January 1, 1994, through June 30, 1994.

Applicable Statute and Regulations

Unless otherwise indicated, all citations to the Statute and to the Department's regulations are in reference to the provisions as they existed on December 31, 1994.

Such or Similar Comparisons

We have determined for purposes of the preliminary determination that the OCTG covered by this investigation comprises a single category of ''such or similar'' merchandise within the meaning of section 771(16) of the Act.

The respondent reported sales of both identical and similar merchandise in Russia during the POI. Where there were no sales of identical merchandise in the third country to compare to U.S. sales, we made similar merchandise comparisons on the basis of the characteristics listed in Appendix V of the Department's antidumping questionnaire. However, we modified the matching hierarchy in Appendix V so that, whenever possible, U.S. sales of OCTG tubing would be matched to Russian sales of OCTG tubing and U.S. sales of OCTG casing would be matched to Russian sales of OCTG casing, by making that the primary matching criterion. We also took into account Kindberg's sales of proprietary finishing grades, by including minimum/maximum yield strengths and tensile strengths as a criterion in the matching hierarchy. Thus we made similar merchandise comparisons on the basis of: (1) Whether OCTG is casing or tubing, (2) whether OCTG is seamless or welded; (3) the grade of OCTG finish; (4) the minimum/maximum yield strength and tensile strength, (5) end finish; (6) outside diameter, (7) OCTG length, (8) full-body normalization; and (9) wall thickness (see the January 20, 1995, memorandum from William Crow to David Binder for detailed discussion of the product analysis). Kindberg had incorrectly reported multiple costs instead of one POI cost for unique products. After weight-averaging the multiple costs reported for unique products to derive single POI costs specific to each product model, we made adjustments, where appropriate, for differences in the physical characteristics of the merchandise, in accordance with 773(a)(4)(C) of the Act.

Fair Value Comparisons

To determine whether Kindberg's sales of OCTG from Austria to the United States were made at less than fair value, we compared the United States price (USP) to the foreign market value (FMV), as specified in the ''United States Price'' and ''Foreign Market Value'' sections of this notice.

United States Price

We based USP on purchase price, in accordance with section 772(b) of the Act, because the subject merchandise was sold to an unrelated purchaser before importation into the United States and because exporter's sales price methodology was not otherwise indicated. We calculated USP on the basis of packed CIF Houston, duty paid prices to unrelated customers. In accordance with section 772(d)(2)(A) of the Act, we made deductions from U.S. price, where appropriate, for foreign brokerage charges, foreign inland freight, ocean freight, foreign inland and marine insurance, and U.S. duty.

Foreign Market Value

We compared the volume of home market sales of subject merchandise to the volume of third country sales to determine whether there was a sufficient volume of sales in the home market to serve as a viable basis for calculating FMV, in accordance with section 773(a)(1)(B) of the Act. Pursuant to 19 CFR 353.48, we found that the home market was not viable because it represented less than five percent of the amount sold to third countries. We therefore based FMV on third country sales.

We determined, pursuant to 19 CFR 353.49(b), that Russia is the most appropriate third country market because: (1) The merchandise exported to Russia is most similar or identical to the merchandise exported to the United States; (2) the volume of Kindberg's Russian sales during the POI was the largest of any third country; and (3) Kindberg's sales to Russia were to an OCTG market whose organization and developement were similar to that of the U.S. market, based on our analysis of the sales and distribution process for those sales.

Cost of Production Analysis

As stated above, based on the petitioners' allegation that Kindberg was selling OCTG in Russia at prices below its COP, the Department initiated a COP investigation for the Russian sales of Kindberg. In order to determine whether the third country prices were above Kindberg's COP, we calculated the COP based on the sum of Kindberg's cost of

materials, fabrication, general expenses, and packing. Given the effect which they would have on Kindberg's reported COP, we did not adjust the reported standard costs for reported variances because Kindberg failed to explain and document these variances. In addition, information on the record contradicted the reported variances. A detailed and proprietary analysis of the nature of Kindberg's reporting discrepancies is contained in the Department's January 25, 1995, preliminary concurrence memorandum.

Results of COP Analysis

Under our standard practice, where we find that less than 10 percent of a company's sales of a given product were at prices below the COP, we do not disregard any below-cost sales because we determine that the company's below-cost sales were not made in substantial quantities. Where we find between 10 and 90 percent of the company's sales of a given product were at prices below the COP, and the below cost sales were made over an extended period of time, we disregard only the below-cost sales. Where we find that more than 90 percent of the company's sales of a given product were at prices below the COP, and the sales were made over an extended period of time, we disregard all sales for that product and calculate FMV based on constructed value (CV).

In accordance with section 773(b)(1) of the Act, in order to determine whether below-cost sales had been made over an extended period of time, we compare the number of months in which below-cost sales occurred for each product to the number of months in the POI in which that product was sold. If a product was sold in three or more months of the POI, we do not exclude below-cost sales unless there were below-cost sales in at least three months during the POI. When we find that sales of a product only occurred in one or two months, the number of months in which the sales occurred constituted the extended period of time; *i.e.*, where sales of a product were made in only two months, the extended period of time was two months, where sales of a product were made in only one month, the extended period of time was one month (*see* the *Preliminary Results and Partial Termination of Antidumping Duty Administrative Review: Tapered Roller Bearings, Four Inches or Less in Outside Diameter, and Components Thereof, From Japan* (58 FR 69336, 69338, December 10, 1993).

Based on this preliminary analysis, for U.S. sales of certain products, there were adequate Russian sales made above the cost of production to serve as FMV. For U.S. sales of other products, there were not. In such cases, we matched U.S. sales to CV.

Constructed Value Comparisons

We calculated CV based on the sum of Kindberg's cost of materials, fabrication, general expenses, profit and U.S. packing; we did not use the reported variances from standard costs reported because Kindberg failed to fully explain and document these variances. For general expenses, which includes selling and financial expenses (SG&A), we used the greater of the reported general expenses or the statutory minimum of ten percent of the cost of materials and fabrication. For profit, we used the greater of the weighted-average third country profit during the POI or the statutory minimum of eight percent of the cost of materials, fabrication and general expenses, in accordance with section 773(e)(B) of the Act.

Third-Country Sales Comparisons

Where appropriate, we calculated FMV based on delivered prices to unrelated customers in Russia and to unrelated international trading companies whose customers in Russia were known to Kindberg at the time of Kindberg's sale to the trading company.

In light of the Court of Appeals for the Federal Circuit's (CAFC) decision in Ad Hoc Committee of AZ–NM–TX–FL Producers of Gray Portland Cement v. United States, 13 F.3d 398 (Fed. Cir. 1994), the Department no longer can deduct third country market movement charges from FMV pursuant to its inherent power to fill in gaps in the antidumping statute. Instead, we will adjust for those expenses under the circumstance-of-sale provision of 19 CFR 353.56(a), as appropriate. Accordingly, in the present case, we deducted post-sale third-country market inland freight, inland insurance and foreign inland insurance from FMV as direct selling expenses under the circumstance-of-sale provision of 19 CFR 353.56(a).

We deducted home market packing costs and added U.S. packing costs in accordance with section 773(a)(1) of the Act. We also made circumstance-of-sale adjustments for direct selling expenses, which included credit, warranties, guarantees and commissions, in accordance with 19 CFR 353.56(a)(2). We deducted commissions incurred on third-country sales and added total U.S. indirect selling expenses, capped by the amount of home market commissions; those total U.S. indirect selling expenses included U.S. inventory carrying costs, indirect selling expenses incurred in Austria on U.S. sales and indirect selling expenses incurred in the United States.

Currency Conversion

Pursuant to 19 CFR 353.60, we made currency conversions based on the official exchange rates in effect on the dates of the U.S. sales as certified by the Federal Reserve Bank.

Verification

As provided in section 776(b) of the Act, we will verify the information used in making our final determination.

Suspension of Liquidation

In accordance with section 733(d)(1) of the Act (19 U.S.C. 1673(d)(1)), we are directing the Customs Service to suspend liquidation of all entries of OCTG from Austria, as defined in the ''Scope of Investigation'' section of this notice, that are entered, or withdrawn from warehouse, for consumption on or after the date of publication of this notice in the **Federal Register**.

The Customs Service shall require a cash deposit or posting of a bond equal to the estimated preliminary dumping margin, as shown below. The suspension of liquidation will remain in effect until further notice.

Producer/manufacturer/exporter	Margin percentage
Voest-Alpine Stahlrohr Kindberg GmbH	36.73
All others	36.73

ITC Notification

In accordance with section 733(f) of the Act, we have notified the ITC of our preliminary determination.

If our final determination is affirmative, the ITC will determine whether these imports are materially injuring, or threaten material injury to, the U.S. industry before the later of 120 days after the date of this preliminary determination or 45 days after our final determination.

Postponement of Final Determination

January 25, 1995, in accordance with 19 CFR 353.20(b), Kindberg timely requested that, in the event of an affirmative determination, the Department postpone the final determination. We find no compelling reason to deny the request. Accordingly, we are postponing the date of the final determination until not later than 135 days after the date of publication of this notice.

Public Comment

In accordance with 19 CFR 353.38, case briefs or other written comments in

at least ten copies may be submitted by any interested party to the Assistant Secretary for Import Administration no later than March 8, 1995, and rebuttal briefs no later than March 15, 1995. We request that parties in this case provide an executive summary of no more than two pages in conjunction with case briefs on the major issues to be addressed. Further, briefs should contain a table of authorities. Citations to Commerce determinations and court decisions should include the page number where cited information appears. In preparing the briefs, please begin each issue on a separate page. In accordance with 19 CFR 353.38(b), we will hold a public hearing, if requested, to give interested parties an opportunity to comment on arguments raised in case or rebuttal briefs. Tentatively, the hearing will be held on March 22, 1995, at 1 p.m. at the U.S. Department of Commerce, Room 1414, 14th Street and Constitution Avenue, N.W., Washington, D.C. 20230. Parties should confirm the time, date, and place of the hearing 48 hours before the scheduled time.

Interested parties who wish to request a hearing must submit a written request to the Assistant Secretary for Import Administration, U.S. Department of Commerce, Room B–099, within ten days of the publication of this notice in the **Federal Register**. Requests should contain: (1) The party's name, address, telephone number; (2) the number of participants; and (3) a list of the issues to be discussed. In accordance with 19 CFR 353.38(b), oral presentations will be limited to the issues raised in the briefs.

This determination is published pursuant to section 733(f) of the Act (19 U.S.C. 1673b(f)) and 19 CFR 353.15(a)(4).

Dated: January 26, 1995.

Susan G. Esserman,

Assistant Secretary for Import Administration.

[FR Doc. 95–2616 Filed 2–1–95; 8:45 am]

BILLING CODE 3510–DS-P

[A–475–816]

Notice of Preliminary Determination of Sales at Less Than Fair Value: Oil Country Tubular Goods From Italy

AGENCY: Import Administration, International Trade Administration, Department of Commerce.

EFFECTIVE DATE: February 2, 1995.

FOR FURTHER INFORMATION CONTACT: Bill Crow or Lisa Girardi, Office of Antidumping Investigations, Import Administration, International Trade Administration, U.S. Department of Commerce, 14th Street and Constitution Avenue, N.W., Washington, D.C., 20230; telephone (202) 482–0116 or (202) 482–4105, respectively.

Preliminary Determination

We preliminarily determine that oil country tubular goods (OCTG) from Italy are being, or are likely to be, sold in the United States at less than fair value, as provided in section 733(b) of the Tariff Act of 1930, as amended (the Act) (19 U.S.C. 1673b).

Case History

Since the initiation of this investigation on July 20, 1994 (59 FR 37962, July 26, 1994), the following events have occurred.

On August 15, 1994, the U.S. International Trade Commission (ITC) issued an affirmative preliminary determination.

In July 1994, the Department requested information regarding manufacturers or exporters of the subject merchandise from the U.S. Embassy in Rome. The Embassy informed the Department that Dalmine S.p.A. (Dalmine) and Acciaierie Tubificio Arvedi S.p.A. (Arvedi) were the main exporters of the subject merchandise.

On August 26, 1994, based on statements from the petitioners and information from Metal Bulletin Books, Ltd., *Iron and Steel Works of the World* (10th ed. 1991), the Department issued a full antidumping questionnaire to Dalmine, and antidumping surveys to five other potential respondents: Alessio Tubi S.p.A., Tubimar Ancona S.p.A., Seta Tubi Srl, Arvedi, and General Sider Europa S.p.A. (General Sider). On September 8, 1994, we received a response from Tubimar Ancona S.p.A. stating that it did not export the subject merchandise during the POI. On September 13, 1994, we received a similar response from Alessio Tubi S.p.A. and a response from Seta Tubi Srl that it is no longer in existence. On September 22, 1994, we received volume and value information from Arvedi. We did not receive any response from General Sider, although we confirmed with the express delivery service that General Sider had received our survey on August 30, 1994 (see, the September 30, 1994, memorandum from Krysten Jenci to the file). To ensure that it understood our request for information, we sent General Sider another survey, containing additional explanation, on October 7, 1994. We confirmed with the express delivery service that General Sider received the survey on October 11, 1994 (see, the October 20, 1994, memorandum from Richard W. Moreland to Barbara R. Stafford).

On October 7, 1994, Arvedi notified the Department that it would not participate in the investigation. On October 20, 1994, after the Department had still not received a response from General Sider, we selected Dalmine, Arvedi, and General Sider as mandatory respondents in this investigation. Based on information on the record, the Department believes that these three companies account for at least 60 percent of exports of OCTG from Italy during the period of investigation (see, the October 3, 1994, memorandum from David L. Binder to Richard W. Moreland and the October 20, 1994, memorandum from Richard W. Moreland to Barbara R. Stafford).

On September 26, 1994, Dalmine submitted its response to section A of our August 26, 1994, questionnaire. In this response, Dalmine claimed that its home market was not viable, and that it should report third country sales data as a basis for foreign market value (FMV). In October 1994, Dalmine and the petitioners submitted comments on the home market viability issue.

On November 4, 1994, the Department determined that the home market was viable, and instructed Dalmine to report home market sales (*see* November 4, 1994 memorandum from Richard W. Moreland to Barbara R. Stafford). As a result of this decision, on November 30, 1994, Dalmine informed the Department that it would no longer participate in this investigation.

On November 10, 1994, North Star Steel Ohio (a division of North Star Steel Company) (the petitioners), timely requested that the Department postpone the preliminary determination in accordance with section 733(c)(1) of the Act (19 U.S.C. 1673b(c)(1)), and 19 CFR 353.15(c). We did so on November 15, 1994 (59 FR 60130, November 30, 1994).

Scope of Investigation

For purposes of this investigation, OCTG are hollow steel products of circular cross-section, including oil well casing, tubing, and drill pipe, of iron (other than cast iron) or steel (both carbon and alloy), whether seamless or welded, whether or not conforming to American Petroleum Institute (API) or non-API specifications, whether finished or unfinished (including green tubes and limited service OCTG products). This scope does not cover casing, tubing, or drill pipe containing 10.5 percent or more of chromium. The OCTG subject to this investigation are currently classified in the *Harmonized*

Tariff Schedule of the United States (*HTSUS*) under item numbers:

7304.20.10.00, 7304.20.10.10, 7304.20.10.20, 7304.20.10.30, 7304.20.10.40, 7304.20.10.50, 7304.20.10.60, 7304.20.10.80, 7304.20.20.00, 7304.20.20.10, 7304.20.20.20, 7304.20.20.30, 7304.20.20.40, 7304.20.20.50, 7304.20.20.60, 7304.20.20.80, 7304.20.30.00, 7304.20.30.10, 7304.20.30.20, 7304.20.30.30, 7304.20.30.40, 7304.20.30.50, 7304.20.30.60, 7304.20.30.80, 7304.20.40.00, 7304.20.40.10, 7304.20.40.20, 7304.20.40.30, 7304.20.40.40, 7304.20.40.50, 7304.20.40.60, 7304.20.40.80, 7304.20.50.10, 7304.20.50.15, 7304.20.50.30, 7304.20.50.45, 7304.20.50.50, 7304.20.50.60, 7304.20.50.75, 7304.20.60.10, 7304.20.60.15, 7304.20.60.30, 7304.20.60.45, 7304.20.60.50, 7304.20.60.60, 7304.20.60.75, 7304.20.70.00, 7304.20.80.00, 7304.20.80.30, 7304.20.80.45, 7304.20.80.60, 7305.20.20.00, 7305.20.40.00, 7305.20.60.00, 7305.20.80.00, 7306.20.10.30, 7306.20.10.90, 7306.20.20.00, 7306.20.30.00, 7306.20.40.00, 7306.20.60.10, 7306.20.60.50, 7306.20.80.10, and 7306.20.80.50.

Although the *HTSUS* subheadings are provided for convenience and customs purposes, our written description of the scope of this investigation is dispositive.

Period of Investigation

The period of investigation (POI) is January 1, 1994, to June 30, 1994.

Applicable Statute and Regulations

Unless otherwise indicated, all citations to the Statute and to the Department's regulations are in reference to the provisions as they existed on December 31, 1994.

Best Information Available

We have determined, in accordance with section 776(c) of the Act (19 U.S.C. 1677e(c)), that the use of best information available (BIA) is appropriate for sales of the subject merchandise in this investigation. In deciding whether to use BIA, section 776(c) provides that the Department shall use BIA when a respondent refuses to produce information requested in a timely manner and in the form required. In this case, Dalmine and Arvedi chose not to participate in this investigation, and General Sider did not respond to our requests for information.

In determining what to use as BIA, the Department follows a two-tiered methodology, whereby the Department normally assigns lower margins to those respondents who cooperate in an investigation, and margins based on more adverse assumptions for those respondents who do not cooperate in an investigation. If the Department deems a respondent to be non-cooperative, that respondent's preliminary margin for the relevant class or kind of merchandise is the higher of either (1) The highest margin in the petition, or (2) the highest calculated margin of any respondent (see, Antifriction Bearings (Other Than Tapered Roller Bearings) and Parts Thereof From the Federal Republic of Germany: Final Determination of Sales at Less Than Fair Value (54 FR 18992, 19033, May 3, 1989)). The Department's two-tier methodology for assigning BIA based on the degree of respondents' cooperation has been upheld by the U.S. Court of Appeals for the Federal Circuit. (See Allied-Signal Aerospace Co. v. the United States, Slip Op. 93–1049 (Fed Cir. June 22, 1993); see also Krupp Stahl AG. et al v. the United States, Slip Op. 93–84 (CIT May 26, 1993).)

In the present case, the mandatory respondents have refused to cooperate with the Department's investigation. Therefore, in accordance with our standard practice, the Department has assigned the highest margin in the petition to all respondents.

Suspension of Liquidation

In accordance with section 733(d)(1) (19 U.S.C. 1673b(d)(1)) of the Act, we are directing the Customs Service to suspend liquidation of all entries of OCTG from Italy, as defined in the ''Scope of Investigation'' section of this notice, that are entered, or withdrawn from warehouse, for consumption on or after the date of publication of this notice in the **Federal Register**. The Customs Service shall require a cash deposit or posting of a bond equal to the estimated preliminary dumping margin, as shown below. The suspension of liquidation will remain in effect until further notice.

Manufacturer/producer/exporter	Weighted-average margin percent
Dalmine S.p.A.	49.78
Acciaierie Tubificio Arvedi S.p.A.	49.78
General Sider Europa S.p.A.	49.78
All others	49.78

ITC Notification

In accordance with section 733(f) (19 U.S.C. 1673b(f)) of the Act, we have notified the ITC of our preliminary determination.

Public Comment

In accordance with 19 CFR 353.38, case briefs or other written comments in at least ten copies must be submitted to the Assistant Secretary for Import Administration by no later than March 1, 1995, and rebuttal briefs by no later than March 8, 1995. In accordance with 19 CFR 353.38(b), we will hold a public hearing, if requested, to give interested parties an opportunity to comment on arguments raised in case or rebuttal briefs. Tentatively, the hearing will be held on March 10, 1995, at 10:00 a.m. at the U.S. Department of Commerce, Room 3708, 14th Street and Constitution Avenue, N.W., Washington, D.C. 20230. Parties should confirm by telephone, the time, date, and place of the hearing 48 hours before the scheduled time.

Interested parties who wish to request a hearing must submit a written request to the Assistant Secretary for Import Administration, U.S. Department of Commerce, Room B–099, within ten days of the publication of this notice in the **Federal Register**. Requests should contain: (1) The party's name, address, and telephone number; (2) the number of participants; and (3) a list of the issues to be discussed. In accordance with 19 CFR 353.38(b), oral presentations will be limited to issues raised in the briefs.

This notice is published pursuant to section 733(f) of the Act (19 U.S.C. 1673b(f)) and 19 CFR 353.15(a)(4).

Dated: January 26, 1995.

Susan G. Esserman,

Assistant Secretary for Import Administration.

[FR Doc. 95–2617 Filed 2–1–95; 8:45 am]

BILLING CODE 3510–DS–P

[A–469–806]

Preliminary Determination of Sales at Not Less Than Fair Value: Antidumping Duty Investigation of Oil Country Tubular Goods From Spain

AGENCY: Import Administration, International Trade Administration, Department of Commerce.

EFFECTIVE DATE: February 2, 1995.

FOR FURTHER INFORMATION CONTACT: William Crow or Lisa Girardi, Office of Antidumping Investigations, Import Administration, U.S. Department of Commerce, 14th Street and Constitution Avenue, N.W., Washington, D.C. 20230; telephone (202) 482–0116, or (202) 482–4105.

Preliminary Determination:

The Department preliminarily determines that oil country tubular

goods (OCTG) from Spain are not being sold in the United States at less than fair value, as provided in section 733(b) of the Tariff Act of 1930, as amended (the Act). We have calculated a preliminary margin of zero percent for Spanish OCTG sold in the United States during the period of investigation.

Case History

Since the initiation of this investigation on July 27, 1994, (59 FR 37962, July 20, 1994), the following events have occurred.

On August 15, 1994, the U.S. International Trade Commission (ITC) issued an affirmative preliminary injury determination in this proceeding (see ITC Investigation No. 731–TA–717).

On August 26, 1994, the Department of Commerce (the Department) issued an antidumping questionnaire to Tubos Reunidos S.A. (TR), and an antidumping survey to Tubacex S.A. On September 9, 1994, we received a letter from Tubacex S.A. stating that it did not sell the subject merchandise to the United States during the period of investigation. On September 27, 1994, the Department selected TR as the sole mandatory respondent in the investigation. TR accounts for at least 60 percent of exports of OCTG from Spain during the period of investigation. TR submitted responses to our questionnaire in September and October 1994, and responses to our deficiency questionnaires in November and December 1994.

On November 10, 1994, Koppel Steel Corporation, U.S. Steel Group (a unit of USX Corporation) and USS/Kobe Steel Company, (the petitioners) timely requested that the Department postpone the preliminary determination in accordance with section 733(c)(1) of the Act (19 CFR 353.15(c)(1994)). We did so on November 15, 1994 (59 FR 60130, November 22, 1994).

On November 2, 1994, the petitioners alleged that TR was selling the subject merchandise in third country markets at below its cost of production. On January 5, 1995, the Department determined that TR's home market was not viable within the meaning of section 773(a)(1)(b) of the Act and 19 CFR 353.48. On January 5, 1995, the Department selected India as the third country market for this investigation (see January 5, 1995, memorandum from David L. Binder to Gary Taverman). After analyzing the petitioners' allegation, we found reasonable grounds to believe or suspect that sales in India were being made at less than the cost of production. Consequently, on January 9, 1995, the Department initiated an investigation of sales below cost for TR's sales to India, in accordance with section 773(b) of the Act and 19 CFR 353.51. On January 11, 1995, we issued Section D of the antidumping questionnaire concerning cost of production to TR.

On January 26, 1995, in accordance with 19 CFR 353.20(b), respondent requested that, in the event of an affirmative preliminary determination by the Department, the Department postpone the final determination. However, because this preliminary determination is negative, the criteria for a postponement of the final determination under 19 CFR 353.20(b)(1) have not been met. Accordingly, the final determination has not been postponed.

Scope of Investigation

For purposes of this investigation, OCTG are hollow steel products of circular cross-section, including oil well casing, tubing, and drill pipe, of iron (other than cast iron) or steel (both carbon and alloy), whether seamless or welded, whether or not conforming to American Petroleum Institute (API) or non-API specifications, whether finished or unfinished (including green tubes and limited service OCTG products). This scope does not cover casing, tubing, or drill pipe containing 10.5 percent or more of chromium. The OCTG subject to this investigation are currently classified in the *Harmonized Tariff Schedule of the United States* (HTS) under item numbers:

7304.20.10.00, 7304.20.10.10, 7304.20.10.20, 7304.20.10.30, 7304.20.10.40, 7304.20.10.50, 7304.20.10.60, 7304.20.10.80, 7304.20.20.00, 7304.20.20.10, 7304.20.20.20, 7304.20.20.30, 7304.20.20.40, 7304.20.20.50, 7304.20.20.60, 7304.20.20.80, 7304.20.30.00, 7304.20.30.10, 7304.20.30.20, 7304.20.30.30, 7304.20.30.40, 7304.20.30.50, 7304.20.30.60, 7304.20.30.80, 7304.20.40.00, 7304.20.40.10, 7304.20.40.20, 7304.20.40.30, 7304.20.40.40, 7304.20.40.50, 7304.20.40.60, 7304.20.40.80, 7304.20.50.10, 7304.20.50.15, 7304.20.50.30, 7304.20.50.45, 7304.20.50.50, 7304.20.50.60, 7304.20.50.75, 7304.20.60.10, 7304.20.60.15, 7304.20.60.30, 7304.20.60.45, 7304.20.60.50, 7304.20.60.60, 7304.20.60.75, 7304.20.70.00, 7304.20.80.00, 7304.20.80.30, 7304.20.80.45, 7304.20.80.60, 7305.20.20.00, 7305.20.40.00, 7305.20.60.00, 7305.20.80.00, 7306.20.10.30, 7306.20.10.90, 7306.20.20.00, 7306.20.30.00, 7306.20.40.00, 7306.20.60.10, 7306.20.60.50, 7306.20.80.10, and 7306.20.80.50.

Although the HTS subheadings are provided for convenience and customs purposes, our written description of the scope of this investigation is dispositive.

Period of Investigation

The period of investigation (POI) is January 1, 1994, through June 30, 1994.

Applicable Statute and Regulations

Unless otherwise indicated, all citations to the Statute and to the Department's regulations are in reference to the provisions as they existed on December 31, 1994.

Such or Similar Comparisons

We have determined for purposes of the preliminary determination that the OCTG covered by this investigation comprises a single category of ''such or similar'' merchandise within the meaning of section 771(b) of the Act.

The respondent reported sales of both identical merchandise and similar merchandise in India during the POI. Where there were sales of similar merchandise in the third country market to compare to U.S. sales, we made comparisons on the basis of the characteristics listed in Appendix V of the Department's questionnaire. However, we modified the matching hierarchy in Appendix V so that sales of Indian casing would first be matched to sales of U.S. casing. Thus we made similar merchandise comparisons on the basis of: (1) Whether OCTG is casing or tubing; (2) whether OCTG is seamless or welded; (3) the grade of OCTG; (4) end-finish (5) outside diameter, (6) OCTG length (7) full-body normalization and (8) wall thickness. TR had incorrectly reported multiple costs instead of one POI cost for unique products. After weight-averaging the multiple costs reported for unique products to derive single POI costs specific to each product model, the Department used TR's reported costs to adjust for physical differences in merchandise.

Fair Value Comparisons

To determine whether sales of OCTG from Spain to the United States were made at less than fair value, we compared the United States price (USP) to the foreign market value (FMV), as specified in the ''United States Price'' and ''Foreign Market Value'' sections of this notice. When comparing the U.S. sales to sales of similar merchandise in the third country market, we made adjustments for differences in physical characteristics, pursuant to 19 CFR 353.57.

United States Price

We based USP on purchase price, in accordance with section 772(b) of the Act, because the subject merchandise was sold to an unrelated purchaser before importation into the United States and because exporter's sales price methodology was not otherwise indicated.

We calculated USP on the basis of packed, CIF duty paid prices to unrelated customers. In accordance with section 772(d)(2)(A) of the Act, we made deductions from U.S. price, where appropriate, for foreign brokerage, foreign inland freight, ocean freight, marine insurance, U.S. duty, and U.S. brokerage and handling.

In order to calculate imputed credit on U.S. sales where the date of payment was not reported, we used the date of this preliminary determination as the date of payment. Where the respondent did not properly account for the quantities shipped on different invoices for a purchase order, we recalculated credit by weight-averaging the credit expenses for each invoice by the respective quantities shipped for each invoice to determine one weighted-average credit expense for the purchase order.

Foreign Market Value

Because there were no sales of the subject merchandise in the home market during the POI, we found that the home market was not viable, in accordance with 19 CFR 353.48(a). India was selected as the most appropriate third country on which to base FMV because: (1) The merchandise exported to India is most similar or identical to the merchandise exported to the United States; (2) the volume of sales during the POI was the second largest of any third country; and (3) TR's sales to India were to an OCTG market whose organization and development were similar to that of the U.S. market, based on our analysis of the sales and distribution process for those sales. (*see* January 5, 1995, memorandum from David L. Binder to Gary Taverman).

We excluded from our analysis those sales in the third country market database with negative quantities or negative sales prices.

We calculated FMV based on C&F and CIF prices to processor-distributors and trading companies in India.

In light of the Court of Appeals for the Federal Circuit's (CAFC) decision in Ad Hoc Committee of AZ–NM–TX–FL Producers of Gray Portland Cement v. United States, 13 F.3d 398 (Fed. Cir. 1994), the Department can no longer deduct third country market movement charges from FMV pursuant to its inherent power to fill gaps in the antidumping statute. Instead, we will adjust for those expenses under the circumstance-of-sale provision of 19 CFR 353.56(a), as appropriate. Accordingly, in the present case, we deducted from FMV the following direct selling expenses pursuant to 19 CFR 353.56(a): post-sale third-country inland freight and insurance, ocean freight, and marine insurance expenses.

We deducted third-country packing costs and added U.S. packing costs in accordance with section 773(a)(1) of the Act. We also made circumstance-of-sale adjustments for a third-country direct selling expense, imputed credit, in accordance with 19 CFR 353.56(a)(2). In order to calculate imputed credit on sales to India where the date of payment was not reported, we used the date of this preliminary determination as the date of payment. Where the respondent did not properly account for the quantities shipped on different invoices for a purchase order, we recalculated credit by weight-averaging the credit expenses for each invoice by the respective quantities shipped for each invoice to determine one weighted-average credit expense for the purchase order.

Cost of Production (COP)

As stated above, the petitioners made a sales-below-cost allegation on November 2, 1994. The Department initiated a sales-below-cost investigation on January 9, 1995, and issued its section D questionnaire on January 11, 1995. The section D response is due on February 1, 1995, and thus a COP analysis cannot be undertaken for purposes of the preliminary determination. We will undertake such an analysis for purposes of the final determination.

Currency Conversion

We have made currency conversions based on the official exchange rates, certified by the Federal Reserve Bank of New York, in effect on the dates of the U.S. sales.

Verification

As provided in section 776(b) of the Act, we will verify the information used in making our final determination.

Preliminary Margin Calculation

Based on the calculation methodology outlined above, we preliminarily calculated the following margins:

Producer/manufacturer/exporter	Margin percentage
Tubos Reunidos S.A.	00.00
All others	00.00

ITC Notification

In accordance with section 733(f) of the Act, we have notified the ITC of our preliminary determination.

If our final determination is affirmative, the ITC will determine whether these imports are materially injuring, or threaten material injury to, the U.S. industry before the later of 120 days after the date of this preliminary determination or 45 days after our final determination.

Public Comment

In accordance with 19 CFR 353.38, case briefs or other written comments in at least ten copies may be submitted by any interested party to the Assistant Secretary for Import Administration no later than March 7, 1995, and rebuttal briefs no later than March 14, 1995. We request that parties in this case provide an executive summary of no more than two pages in conjunction with case briefs on the major issues to be addressed. Further, briefs should contain a table of authorities. Citations to Commerce determinations and court decisions should include the page number where cited information appears. In preparing the briefs, please begin each issue on a separate page. In accordance with 19 CFR 353.38(b), we will hold a public hearing, if requested, to give interested parties an opportunity to comment on arguments raised in case or rebuttal briefs. Tentatively, the hearing will be held on March 21, 1995, at 1 p.m. at the U.S. Department of Commerce, Room 1414, 14th Street and Constitution Avenue, N.W., Washington, D.C. 20230. Parties should confirm the time, date, and place of the hearing 48 hours before the scheduled time.

Interested parties who wish to request a hearing must submit a written request to the Assistant Secretary for Import Administration, U.S. Department of Commerce, Room B–099, within ten days of the publication of this notice in the **Federal Register**. Requests should contain: (1) The party's name, address, telephone number; (2) the number of participants; and (3) a list of the issues to be discussed. In accordance with 19 CFR 353.38(b), oral presentations will be limited to the issues raised in the briefs.

This determination is published pursuant to section 733(f) of the Act (19 U.S.C. 1673b(f)) and 19 CFR 353.15(a)(4).

Dated: January 26, 1995.

Susan G. Esserman,

Assistant Secretary for Import Administration.

[FR Doc. 95–2618 Filed 2–1–95; 8:45 am]

BILLING CODE 3510–DS–P

[A–588–604]

Final Affirmative Determination in Scope Inquiry on Antidumping Duty Order on Tapered Roller Bearings and Parts Thereof From Japan

AGENCY: Import Administration, International Trade Administration, Department of Commerce.

ACTION: Notice of final determination of scope inquiry.

SUMMARY: We determine that tower forgings, hot forgings, and cold forgings are within the scope of the antidumping duty order on tapered roller bearings and parts thereof, finished or unfinished, from Japan.

EFFECTIVE DATE: February 2, 1995.

FOR FURTHER INFORMATION CONTACT: Maureen Shields at (202) 482–1690 or John Kugelman at (202) 482–5253, Office of Antidumping Compliance, Import Administration, International Trade Administration, U.S. Department of Commerce, 14th Street and Constitution Avenue, N.W., Washington, D.C. 20230.

SUPPLEMENTARY INFORMATION:

Background

On September 17, 1993, Koyo Seiko Company Ltd. and Koyo Corporation of U.S.A. (Koyo) requested that the Department of Commerce (the Department) issue a ruling that rough forgings, including tower forgings, hot forgings, and cold forgings, be found outside the scope of the antidumping duty order on tapered roller bearings and parts thereof from Japan (52 FR 37352, October 6, 1987). The forgings at issue are formed from bearing grade steel bar, which is sheared, pierced and, through either a hot or a cold process, extruded into the approximate shape of a TRB cup or cone, or, in the case of tower forgings, both a cup and a cone or an inner and an outer raceway. The forgings are not machined in any way prior to exportation. The Department initiated its scope inquiry on September 28, 1993, and granted interested parties an opportunity to comment on whether these forgings fall within the scope of the order. We received comments from the petitioner, the Timken Company, and rebuttal comments from Koyo.

Due to the significant difficulty presented by this scope inquiry, we published a preliminary determination (59 FR 9471, February 28, 1994) in accordance with the Department's regulations (19 CFR 353.29(d)(3) (1993)). We preliminarily determined that Koyo's forgings constitute unfinished parts that are within the scope of the order. We received comments and rebuttal comments on the preliminary determination from Timken and from Koyo, and we held a public hearing on March 24, 1994. In order to ensure a more thorough understanding of the materials and processes used in the production of TRBs, the Department accepted invitations to tour the U.S. manufacturing facilities of American Koyo Bearing Manufacturing Company (AKBMC) and the Timken Company (Timken). We toured AKBMC's plant in Orangeburg, South Carolina, on April 21, 1994, and two Timken plants in Canton, Ohio, on April 22, 1994.

In accordance with 19 CFR 353.29(i)(1), in analyzing the scope request in this proceeding, the Department considered the descriptions of the merchandise contained in the petition, the initial less-than-fair-value (LTFV) investigation, and the determinations of the Department and the International Trade Commission (ITC). The regulations provide that if the Department determines that these descriptions are not dispositive, it will further consider the factors provided for under 19 CFR 353.29(i)(2), known commonly as *Diversified Products* criteria (see *Diversified Products Corp.* v. *United States*, 572 F. Supp. 883 (CIT 1983)).

Timken contends that the petition and the record of the investigation unambiguously include Koyo's forgings in the definition of unfinished parts, and that the Department's analysis of the *Diversified Products* criteria in the preliminary determination was therefore unnecessary. However, Timken claims that an analysis of these criteria further supports its position that Koyo's forgings are within the scope of the order.

Koyo claims that the Department's preliminary affirmative determination contradicts previous scope determinations as well as the Department's acceptance in prior administrative reviews of Koyo's statements that the forgings in question are outside the scope of the order. Koyo has stated during administrative reviews that it imports forgings but has not reported them, since it considers them outside the scope of the order. The Department never challenged these statements.

In this final determination we find that the forgings at issue are ''unfinished parts,'' and are thus within the scope of the order. Because the descriptions in the petition, the LTFV investigation, and the determinations of the Department and the ITC are not dispositive, analysis of the *Diversified Products* criteria is necessary. In determining if forgings are within the order, the Department considered the factors set forth at 19 CFR 353.29(i)(2): (1) the physical characteristics of the product; (2) the expectations of the ultimate purchasers; (3) the ultimate use of the product; and (4) the channels of trade. These criteria indicate that the forgings in question are within the scope of the order because of their size and advanced shape, because they travel through the same channels of trade as other unfinished parts, and because it is highly unlikely that they will be used in anything other than a TRB. We have addressed comments from the parties on each of these issues in our analysis below.

Analysis

1. The Language of the Petition

The original petition describes the subject merchandise as follows:

> The merchandise covered by this petition is all tapered roller bearings, tapered rollers and other parts thereof (both finished and unfinished) including, but not limited to, single-row, multiple-row (e.g., two-, four-), and thrust bearings and self-contained bearing packages (generally pre-set, pre-sealed, and pre-greased), but only to the extent that such merchandise is not presently covered by an outstanding antidumping duty order or finding in the United States. Timken notes that the language of the petition is inclusory rather than exclusionary, requesting protection for *all* unfinished parts not covered by an existing order.

Timken argues that the behavior of the parties during the LTFV investigation reflects a belief that forgings were included in the petition. Referring to a statement by one of the respondents that the inclusion of ''forgings and other unfinished components'' would cause it competitive harm, Timken claims that this argument would be made only if the parties believed that forgings were included in the petition. While Koyo agrees that the petition is clearly intended to include all unfinished parts, it notes that the petition makes no attempt to define an unfinished part.

The Department's Position

While the petition clearly asks for coverage of all unfinished parts, it is unclear what articles should be considered unfinished parts. Although Timken may have intended the term unfinished parts to include the kind of imports Koyo describes as rough

forgings, the language in the petition is not sufficiently clear on this point to be used as a basis for making a scope determination in this case.

2. Language of the Order and Determinations of the Department

Under this heading we have examined arguments relating to the conduct of the Department's LTFV investigation and the scope language of the Department's determinations and order. Although not determinative of scope, we have also addressed here arguments regarding subsequent administrative reviews of the order, which Koyo urges should inform our interpretation of the record of the LTFV investigation.

With respect to the LTFV investigation, Timken argues that Koyo's actions during the investigation indicate that forgings were considered to be within the scope of the investigation because it reported forgings. Specifically, Koyo reported inner rings for two part numbers that were cold-forged. Koyo did not argue during the Department's investigation that forgings should not be considered unfinished parts, but argued more generally that unfinished parts should be outside the scope of the order. At the Department's investigation hearing, in referring to raw material which it considered out of scope, Koyo referred only to steel coil.

Koyo contends that its inclusion of the two cold-formed models in its response to the questionnaire in the LTFV investigation was due to its attempts to be over-inclusive in submitting any information the Department might need, and that this position is supported by the fact that once the scope of the order was defined, Koyo consistently treated forgings as outside the scope. Although not clear from the record of the investigation, Koyo also noted at the public hearing on this scope proceeding that these two cold-formed models had been machined, and that its inclusion of these models in its questionnaire response was therefore not relevant to the question of whether forgings which had not been machined were within the scope of the investigation.

The products covered by the preliminary and final LTFV determinations and the order as it was published in 1987 are

tapered roller bearings and parts thereof, currently classified under Tariff Schedules of the United States (TSUS) item numbers 680.30 and 680.39; flange, take-up cartridge, and hanger units incorporating tapered roller bearings, currently classified under TSUS item number 661.10; and tapered roller housings (except pillow blocks) incorporating tapered rollers, with or without spindles, whether or not for automotive use, and currently classified under TSUS item number 692.32 or elsewhere in the TSUS. Products subject to the outstanding antidumping duty order covering certain tapered roller bearings from Japan (T.D. 76–227, 41 FR 34974) were not included within the scope of this investigation.'' (see Antidumping Duty Order: Tapered Roller Bearings and Parts Thereof, Finished and Unfinished, from Japan, 52 FR 37352, October 6, 1987).

Koyo argues that, because there is no disclaimer indicating otherwise, this language includes as parts of TRBs only articles classified under the list of specific tariff provisions. At the time of the investigation and the order, Koyo classified its forgings under a tariff number not listed in the order. Koyo disagrees with the Department's statement in the preliminary scope determination that the classification categories from the Tariff Schedules of the United States (TSUS) listed in the determinations and the order are provided for reference only, and are not definitional.[1] Koyo points out that the Department's determinations contain no disclaimers that would indicate that parts imported under other tariff classification numbers might also be included; the only such disclaimer in the description of the scope appears with respect to tapered roller housings. Koyo argues that if the Department had meant to include items imported under classifications other than those listed, it would have stated so. In Koyo's view, however, because the Department relied specifically on TSUS numbers to define the merchandise, Koyo claims that the classification numbers listed in the scope description with respect to TRB parts are dispositive and exhaustive.

Timken counters that the language of the scope sections in the determinations and in the order should be analyzed in conjunction with the language of the petition, which states that the list of items named in the petition is not intended to be exhaustive. Timken also argues that the fact that Koyo classified the items in question under a provision for forgings and not under any provision mentioned in the order is irrelevant, since the classification was selected by Koyo rather than by Customs. Timken points out that, despite respondents' vigorous arguments during the investigation for the exclusion of unfinished parts, including forgings, from the like-product definition, the ITC and the Department made no move to exclude these items from the scope.

Koyo also argues that, if the Department had believed that these forgings were within the scope of the order, it would have requested Koyo to report the forgings in subsequent administrative reviews. However, Koyo maintains, although Koyo consistently stated in the course of five administrative reviews that it did not report its imported forgings because it considered them to be outside the scope, neither the Department nor Timken ever questioned this practice or asked for further clarification prior to the 1990–92 reviews. Koyo suggests that the fact that Timken never asked for information on Koyo's forgings casts considerable doubt on Timken's claim that forgings have been within the scope since the time the order was issued. Koyo contends that it is impossible that the Department could have been unclear as to ''what form the imports took'', as the Department performed a further-processing verification of Koyo in 1990.

Timken counters that a verification only involves information reported by the respondent; because Koyo submitted no sales information regarding forgings, Koyo cannot rely on this verification to support a conclusion that the Department was aware of the nature of the imported forgings and yet did not seek to include them within the merchandise examined in the administrative reviews. Furthermore, Timken argues that, because the scope was determined at the time of the LTFV investigation, Koyo's decision not to report forgings in subsequent reviews cannot change the scope of the order.

The Department's Position

A respondent's decision during the proceeding to report or not to report particular items does not define whether or not those items are within the scope. Koyo's reporting of two ''cold-formed models does not imply its acceptance that forgings are within the scope; rather, it may have been an attempt to comply with the investigation by providing as much information as possible on U.S. further manufacturing. By the same token, Koyo's subsequent decision not to report its forgings does not establish that those forgings were not within the scope. We note that another respondent, NTN, does not share Koyo's view that forgings are excluded from the order and has reported its imports of forgings in its questionnaire responses.

Moreover, the ''forgings'' to which Koyo refers in subsequent administrative reviews and in the current scope inquiry were not clearly

[1] The Department notes that the TSUS, which was converted to the Harmonized Tariff Schedule in 1989, was in effect at the time the Department issued the order.

defined. As indicated above, the only forgings Koyo ever reported were the machined forgings it reported during the LTFV investigation. Until the matter was brought to the Department's attention in the context of the current scope clarification request, we did not directly address the specific issue of whether the imports subject to this scope proceeding were sufficiently advanced to constitute unfinished parts for purposes of this antidumping duty order.

With respect to the language of the order, the TSUS numbers listed in the scope of the order are not controlling. Only the Department has the authority to define the scope of the order; importers and Customs officials who determine how to classify imports do not determine the scope. This is in accordance with standard Department practice that Tariff Schedule numbers appearing in the scope of an order are only for convenience and Customs purposes, and are not dispositive. Furthermore, Timken is correct in pointing out that the TSUS number Koyo used to classify its forgings at the time of the order is irrelevant, since the forgings may not have been properly classified even at that time.

In conclusion, neither the language of the investigation nor the language of the order provides guidance as to whether forgings are included within the scope.

3. The ITC's Determination

Timken argues that the ITC indicated it considered forgings to be included because it found a single like product consisting of TRBs and all parts, both finished and unfinished, despite the extensive arguments of respondents to find unfinished parts a distinct like product: ''we decline to adopt the respondents' proposed like product definitions.'' (Tapered Roller Bearings and Parts Thereof, and Certain Housings Incorporating Tapered Rollers, from Japan, Inv. No. 731–TA–343 (Final), USITC Pub 2020, September 1987, p.6). In its report, the ITC rejected Koyo's request to consider the following groups as discrete like products:

1. ''Precursor materials'' (i.e., unfinished forged rings) and ''finished bulk parts'' (i.e., rollers and cages) of tapered roller bearings;

2. Unfinished tapered roller bearing components (i.e., unfinished outer rings and inner rings);

3. Finished tapered roller bearings. (Id., p. 5) Furthermore, Timken argues, the ITC defined TRB parts in its questionnaire as those ''that have been shaped sufficiently so they may only be used in the manufacture of tapered roller bearings'', which, Timken submits, applies to Koyo's forgings.

Koyo argues that the ITC's finding of one like product does not imply that the ITC considered precursor materials (a term which Koyo submits describes, among other things, rings cut from tube steel) to be unfinished parts. Koyo also points out that, in its ruling, the ITC defined unfinished parts as having been green-machined. Although Timken argues that this description concerns a tube-based production process and not forgings, Koyo claims that this description of the production process supports the conclusion that the like product determination does not equate forgings with unfinished parts. Furthermore, Koyo disputes the Department's contention that the ITC's description of the production process (in which green-machining marks the first stage of producing a TRB) applies only to tube steel, stating that both forgings and TRB rings manufactured from tubes must undergo the same green-machining process. Finally, Koyo notes that the U.S. Court of International Trade (CIT) has held that the ITC's like-product determination has only minimal relevance in a scope review (*American NTN Bearing Manufacturing Corporation* v. *United States, 14 CIT 320, 325 (1990) (NTN*)).

The Department's Position

The Commission did not explicitly address Koyo's and other respondents' arguments that forgings and other precursor materials should be defined as a distinct like product. However, the ITC's finding of a single like product does not specifically exclude forgings from the range of products under consideration by the Department and by the ITC in its injury determination.

The staff report contained in the ITC's final determination is also ambiguous with respect to the point at which input materials become unfinished parts. Although this report describes green-machining as the first stage in the TRB production process, this discussion seems to deal with the process of producing TRBs from tubes (the predominant process used by Timken), rather than the forging process employed by Koyo. This is evidenced by the footnote on page A–8 of the ITC's determination, which points out that a ''hot roll ring forming'' forging process may be used as an alternative to green-machining.

The Department disagrees with Koyo that the ITC's discussion of the TRB production process amounts to a bright line definition of green-machining as the point of demarcation between inputs and unfinished parts regardless of the production process involved. Indeed, much of the formation process attributed solely to green machining in the fabrication of TRBs from tube, including imparting the characteristic taper, is achieved through the forging process when TRBs are manufactured using the forgings at issue here.

The definition of unfinished parts in the ITC's questionnaire clearly applies to the forgings at issue here, which are formed close enough in shape to the finished parts to be considered dedicated to use.

In summary, although the ITC's determination does not offer a clear indication that forgings are within the scope of the order, the Commission's injury determination did not specifically exclude forgings, and therefore does not foreclose the possibility that forgings may be within the scope of the order.

4. Previous Scope Determinations

In examining the definition of unfinished TRB parts, we also considered previous TRB scope determinations. Koyo argues that the Department's 1989 ruling that green-machined rings that have not been heat treated are within the scope of the order implies that anything that has not been green-machined is outside the scope of the order. Koyo claims that this applies to forgings as well as to rings manufactured from tube steel. Koyo points out that the 1989 ''green rings'' scope ruling made no distinction between different production processes, although the Department was aware, according to Koyo, of the forging production process. Koyo cites several examples of references to forgings on the record of the 1989 scope determination. Koyo also points out that Timken uses the forging process itself, and therefore was very much aware of what forgings are, as well as the fact that Koyo imported forgings. Koyo suggests that if it believed the determination applied to forgings, Timken would have argued at the time of the 1989 ruling that more information on Koyo's forgings was necessary. Koyo argues that the Department may not now reverse its position that green-machining represents the first stage in the TRB production process, because to do so would be to expand the scope of the order ex post facto.

Koyo further asserts that the Department's 1981 scope ruling in the context of the 1976 finding on tapered roller bearings, four inches and under in outer diameter, clearly defined unfinished parts of TRBs as those that have been rough-machined. Koyo argues that the Department must adhere to this

precedent. Moreover, Koyo argues, in its petition in the over four-inch case, which Timken submitted after the 1981 scope ruling, Timken did not disagree with the Department's 1981 definition of unfinished parts.

Timken counters that the issue of articles that had not yet been green-machined was not in question during the green-ring scope proceeding, and that the Department made no decision concerning non-machined parts in that determination.

The Department's Position

The green-ring scope determination dealt only with articles that had already been green-machined, and thus was silent with respect to whether articles that had not been machined were within the scope of the order. Therefore, this prior determination cannot serve as an indication of the Department's position with respect to forgings. We note further that for Koyo products, the forging production process does give some of the shape that green-machining might otherwise give.

As for the 1981 ruling in the under-four-inch case, that ruling is irrelevant to this proceeding since it involved a separate class or kind of merchandise. See *NTN,* 14 CIT at 328. However, we note that even though the Department did refer, in the context of that case, to unfinished TRB components as having been rough-machined, that statement does not preclude other items, such as forgings, from also being included within the definition of unfinished TRB parts.

Diversified Products

After examining the language of the petition, the Department's determinations, the ITC's determination, and the order, the Department determines that the language in these documents is not dispositive. Because there is no definitive language in any of these documents that would allow us to determine conclusively whether these forgings are unfinished parts within the scope of the order, we have determined that an analysis of the *Diversified Products* criteria is necessary.

With respect to the *Diversified* analysis, the Department has determined that it is useful to compare the items in question both to articles which are clearly understood to be within the scope as well as to articles which are admittedly outside the scope. Examining related articles, both in-scope and outside the scope, provides perspective on the products under consideration.

Physical Characteristics

Timken argues that these forgings have undergone significant processing and are advanced beyond the stage of raw materials. Timken states further that forgings are distinct from rings cut from tube steel, as forgings are ''near net shape'' and have already acquired the characteristic taper and the approximate dimensions of the finished product. According to Timken, these forgings have physical characteristics similar to those of unfinished parts. Furthermore, Timken contends that Koyo's comparison of forgings to rings cut from tube is inappropriate, since the tube from which TRBs are made is generally green-machined *before* the ring is sheared off.

Koyo argues that green-machining is an extensive process that cannot be considered a finishing step performed on an unfinished part, and that these forgings, which have not been green-machined, therefore do not constitute unfinished parts. The green-machining process is so extensive, Koyo argues, that the forging must be considered physically distinct from the green-machined rings found to be within the scope in the Department's 1989 scope determination. Koyo argues further that tower forgings are even more distinct from green rings since each tower forging yields two separate parts.

Koyo points out that the forgings at issue undergo the same number of green-machining steps as rings cut from tube steel, and that the major difference is the amount of waste. Koyo asserts that in considering the extent of physical similarity between forgings and the green-machined rings that are clearly within the scope of the order, the significant measure is weight loss, rather than the dimensional tolerances discussed by Timken, which Koyo also contends are inaccurate. Koyo suggests that Timken is contradicting its previous statements that green-machining represents the first stage in the manufacturing process and that a component is dedicated to use after green-machining. Furthermore, Koyo rebuts Timken's contention that Koyo cold-forms its hot forgings in order to bring them closer to the final form. Koyo states that it never cold-forms rings that have previously been hot-formed. Koyo also notes that the ''upset forging process'', which Timken submits is a substitute for green-machining, is no longer used by Koyo. According to Koyo, all of its forgings must be green-machined to some extent.

The Department's Position

We agree with Timken that forgings have undergone significant processing and are advanced beyond the stage of raw materials. Although all parties agree that these forgings still must be green-machined, the amount of green-machining required to produce a finished TRB varies according to the input. Cold forgings, for example, may not need to have all their surfaces worked and require very little green-machining.

The Department disagrees with Koyo's contention that green-machining is the process that defines the boundary between an input and an unfinished part. In this case, the physical characteristics of the forgings at issue, taken as a whole, are much more compelling. These forgings are already very close in shape and size to the in-scope green-machined rings, and already have much of the shape that green-machining imparts to tubing. Although it is true that tower forgings must be cut into two parts, the approximate dimensions of the two rings which the tower will become are already defined in the forging. Thus, these forgings have the physical characteristics of unfinished parts.

Channels of Trade

Koyo claims that forgings move through a separate channel of trade because they are sourced from forgers rather than from bearings manufacturers. Koyo submits that forgings move through the same channels of trade as other raw materials and precursor materials that are admittedly outside the scope.

Timken argues that independent forgers are merely subcontractors, and further adds that Koyo performs its own forging. Timken notes that although forgers may sell to manufacturers of either TRBs or antifriction bearings (AFBs), the forgings at issue already have the profile of either a TRB or an AFB since the tooling and machinery are different depending upon the intended end use.

The Department's Position

Most of Koyo's forgings are purchased from steel forgers or produced by Koyo itself. They travel through the same channel of trade as unfinished parts of TRBs in that they are destined for bearings manufacturers. In this respect, a significant portion of forgings move through the same channel of trade as the green rings referred to in the 1989 decision. Therefore, this criterion indicates that forgings are within the scope of the order.

Expectations of the Ultimate Purchaser

Both parties agree that the expectation of the ultimate purchaser of the forgings at issue is to produce a TRB or an AFB. Timken submits that since the goal of the forging process is to come as close as possible to the shape of the finished part and thus to reduce the amount of scrap metal, the expectation of the purchaser is the same as that of any other unfinished TRB part, which is to produce a finished bearing.

Koyo argues that this criterion is, at best, unhelpful, since the expectation of purchasers of articles that are admittedly outside the scope is also to incorporate them into TRBs.

The Department's Position

All parties agree that the expectation of purchasers of the forgings in question is to incorporate them into TRBs, or, in some cases, AFBs. Although other products, such as raw materials, may be imported with the same expectation, this does not negate the argument that importers of forgings expect to use them in a limited range of model numbers. Forgings are imported into the United States tagged with the specific model number or numbers of TRB parts to be manufactured from the forging. Therefore, this criterion also indicates that forgings are within the scope.

Ultimate Use

Koyo argues that since some forgings, especially tower forgings, are sometimes used for items outside the scope of the order, this criterion indicates that forgings are outside the scope. Koyo argues that forgings are not dedicated to use in the same manner as green rings, which are agreed to be within the scope. Koyo argues that the Department may not base a finding that merchandise is within the scope on the ultimate-use criterion when there is evidence that the product is not dedicated for use solely in merchandise within the scope of the order.

Timken argues that there are no significant alternate uses for these forgings other than the manufacture of TRBs. Although it is possible to make both an AFB and a TRB from a single tower forging, the use of these tapered forgings to produce AFBs or other non-scope merchandise is unusual and not cost-effective. Timken suggests that Koyo knows how the forgings will ultimately be used at the time they are produced, and that Koyo could easily identify which forgings are destined for TRBs and which are for AFBs.

Koyo submits that, regardless of whether the use of these forgings for anything other than TRBs is cost-effective, a forging is not dedicated to use until it is green-machined. This is particularly true of a tower forging, which must be separated into two rings.

The Department's Position

The forgings in question will almost certainly be made into finished cups and cones for TRBs. Although other uses such as incorporation into AFBs are possible, they are merely alternatives to the main use. We agree with Timken that multiple-use forgings are not cost-effective on a commercial scale. We also note that other examiners of the product, such as Customs inspectors, recognize that the essential dedication of these forgings to use in the production of a TRB defines them as TRB parts. For example, in a 1990 ruling on similar forgings manufactured by another company, the U.S. Customs Service stated:

> After importation, the articles will be processed into inner and outer rings for bearings by cutting and forming operations . . . there is no evidence or claim that the forgings have any other use . . . The forgings, which must be cut and machined after importation, are blanks which are unfinished inner and outer rings and classified as parts of ball or roller bearings in subheading 8482.99.10 or 8482.99.30, HTSUSA, depending on whether they are blanks for ball bearings or for tapered roller bearings. (Customs Classification Letter of April 26, 1990, to Robert E. Burke, Esq., of Barnes, Richardson & Colburn (HQ 085579).)

Although classifications decisions by Customs are not determinative of the scope of an antidumping duty order, they can be indicative; this ruling provides perspective on the ultimate-use criterion, and, therefore, merits consideration. The ultimate-use criterion dictates that forgings fall within the scope.

Effective Date

Koyo argues that if the Department concludes in its final determination that forgings are within the scope, the determination must be effective prospectively, as of the date of publication in the **Federal Register**. Timken did not comment on this issue.

Department's Position

A scope determination is, by law, a clarification of what the scope of the order was at the time the order was issued. Therefore, the Department will incorporate this decision into all pending reviews of this order as well as all future reviews.

Conclusion

Based primarily on the physical characteristics of the forgings, their ultimate use, the expectations of the ultimate purchaser, and the channels of trade, the Department determines that Koyo's rough forgings, defined above and including hot forgings, cold forgings, and tower forgings, are within the scope of the order.

Dated: January 26, 1995.

Susan G. Esserman,

Assistant Secretary for Import Administration.

[FR Doc. 95–2609 Filed 2–1–95; 8:45 am]

BILLING CODE 3510–DS–P

President's Export Council: Meeting of the President's Export Council

AGENCY: International Trade Administration, Commerce.

ACTION: Notice of a closed meeting.

SUMMARY: The President's Export Council (Council) is holding its inaugural meeting. The meeting must be closed to the public to discuss classified material. The Council will discuss issues relating to relations with our trading partners, export controls and other sensitive matters properly classified under Executive Order 12356. The President's Export Council was established on December 20, 1973, and reconstituted May 4, 1979 to advise the President on matters relating to U.S. export trade. It was most recently renewed on September 30, 1993, by Executive Order 12689.

A Notice of Determination to close meetings or portions of meetings of the Council to the public on the basis of 5 U.S.C. 5522b(c)(1) has been approved in accordance with the Federal Advisory Committee Act. A copy of the notice is available for public inspection and copying in the Central Reference and Records Inspection Facility, room 6204, U.S. Department of Commerce, 202–482–4115.

DATES: February 13, 1995, from 9:00 a.m.–12:30 p.m.

ADDRESSES: Indian Treaty Room, Old Executive Office Building, Washington, DC.

FOR FURTHER INFORMATION CONTACT:

Jane Siegel, President's Export Council, room 2015B, Washington, DC 20230.

Dated: January 26, 1995.

Jane Siegel,

Staff Director and Executive Secretary, President's Export Council.

[FR Doc. 95–2508 Filed 2–1–95; 8:45 am]

BILLING CODE 3510–DR–M

Antidumping or Countervailing Duty Order, Finding, or Suspended Investigation; Opportunity To Request Administrative Review

AGENCY: Import Administration, International Trade Administration, Department of Commerce.

ACTION: Notice of opportunity to request Administrative Review of Antidumping or Countervailing Duty Order, Finding, or Suspended Investigation.

BACKGROUND: Each year during the anniversary month of the publication of an antidumping or countervailing duty order, finding, or suspension of investigation, an interested party, as defined in section 771(9) of the Tariff Act of 1930, as amended, may request, in accordance with Section 353.22 or 355.22 of the Department of Commerce (the Department) Regulations (19 CFR 353.22/355.22 (1993)), that the Department conduct an administrative review of that antidumping or countervailing duty order, finding, or suspended investigation.

OPPORTUNITY TO REQUEST A REVIEW: Not later than February 28, 1995, interested parties may request administrative review of the following orders, findings, or suspended investigations, with anniversary dates in February for the following periods:

	Period
Antidumping Duty Proceedings:	
Austria: Railway Track Maintenance Equipment, (A–433–063)	02/01/94–01/31/95
Canada: Racing Plates, (A–122–050)	02/01/94–01/31/95
Germany: Sodium Thiosulfate, (A–428–807)	02/01/94–01/31/95
India: Forged Stainless Steel Flanges, (A–533–809)	02/09/94–01/31/95
Japan: Benzyl Paraben, (A–588–816)	02/01/94–01/31/95
Japan: Carbon Steel Butt-Weld Pipe Fittings, (A–588–602)	02/01/94–01/31/95
Japan: Melamine, (A–588–056)	02/01/94–01/31/95
Japan: Mechanical Transfer Presses, (A–588–810)	02/01/94–01/31/95
Taiwan: Forged Stainless Steel Flanges, (A–583–821)	02/09/94–01/31/95
The People's Republic of China: Axes/Adzes, (A–570–803)	02/01/94–01/31/95
The People's Republic of China: Bars/Wedges, (A–570–803)	02/01/94–01/31/95
The People's Republic of China: Hammers/Sledges, (A–570–803)	02/01/94–01/31/95
The People's Republic of China: Picks/Mattocks, (A–570–803)	02/01/94–01/31/95
The People's Republic of China: Natural Bristle Paint Brushes, (A–570–501)	02/01/94–01/31/95
The People's Republic of China: Sodium Thiosulfate, (A–570–805)	02/01/94–01/31/95
The Republic of Korea: Certain Small Business Telephone Systems and Subassemblies Thereof, (A–580–803)	02/01/94–01/31/95
The Republic of Korea: Stainless Steel Butt-Weld Pipe Fittings, (A–580–813)	02/01/94–01/31/95
United Kingdom: Sodium Thiosulfate, (A–412–805)	02/01/94–01/31/95
Suspension Agreements:	
Venezuela: Gray Portland Cement and Clinker, (A–307–803)	02/01/94–01/31/95
Countervailing Duty Proceedings:	
Peru: Cotton Sheeting and Sateen, (C–333–001)	01/01/94–12/31/94
Peru: Cotton Yarn, (C–333–002)	01/01/94–12/31/94
Thailand: Malleable Iron Pipe Fittings, (C–549–803)	01/01/94–12/31/94

In accordance with sections 353.22(a) and 355.22(a) of the regulations, an interested party as defined by section 353.2(k) may request in writing that the Secretary conduct an administrative review. For antidumping reviews, the interested party must specify for which individual producers or resellers covered by an antidumping finding or order it is requesting a review, and the requesting party must state why it desires the Secretary to review those particular producers or resellers. If the interested party intends for the Secretary to review sales of merchandise by a reseller (or a producer if that producer also resells merchandise from other suppliers) which were produced in more than one country of origin, and each country of origin is subject to a separate order, then the interested party must state specifically which reseller(s) and which countries of origin for each reseller the request is intended to cover.

Seven copies of the request should be submitted to the Assistant Secretary for Import Administration, International Trade Administration, room B–099, U.S. Department of Commerce, Washington, DC 20230. The Department also asks parties to serve a copy of their requests to the Office of Antidumping Compliance, Attention: John Kugelman, in room 3065 of the main Commerce Building. Further, in accordance with section 353.31(g) or 355.31(g) of the regulations, a copy of each request must be served on every party on the Department's service list.

The Department will publish in the **Federal Register** a notice of ''Initiation of Antidumping (Countervailing) Duty Administrative Review,'' for requests received by February 28, 1995. If the Department does not receive, by February 28, 1995, a request for review of entries covered by an order or finding listed in this notice and for the period identified above, the Department will instruct the Customs Service to assess antidumping or countervailing duties on those entries at a rate equal to the cash deposit of (or bond for) estimated antidumping or countervailing duties required on those entries at the time of entry, or withdrawal from warehouse, for consumption and to continue to collect the cash deposit previously ordered.

This notice is not required by statute, but is published as a service to the international trading community.

Dated: January 27, 1995.

Roland L. MacDonald,

Acting Deputy Assistant Secretary for Compliance.

[FR Doc. 95–2619 Filed 2–1–95; 8:45 am]

BILLING CODE 3510–DS–M

National Oceanic and Atmospheric Administration

Evaluation of State Coastal Management Programs and National Estuarine Research Reserves

AGENCY: Office of Ocean and Coastal Resource Management, National Ocean Service, National ceanic and Atmospheric Administration (NOAA), DOC.

ACTION: Notice of availability of evaluation findings.

SUMMARY: Notice is hereby given of the availability of the final evaluation findings for American Samoa, Louisiana, Maryland, Michigan, Puerto Rico, and South Carolina Coastal Management Programs, and Great Bay (New Hampshire), Chesapeake Bay (Virginia) National Estuarine Research Reserves (NERRs). Section 312 and 315 of the Coastal Zone Management Act of 1972 (CZMA), as amended, requires a continuing review of the performance of coastal states with respect to coastal management and the operation and management of NERRs.

The states of Maryland, Michigan, South Carolina, and the Territories of the American Samoa and Puerto Rico were found to be implementing and enforcing their Federally approved coastal management program, addressing the national coastal management objectives identified in CZMA section 303(2)(A)–(K), and adhering to the programmatic terms of their financial assistance awards. The state of Louisiana was found not to be fully adhering to its approved coastal management program. Implementation of several recommendations listed in the findings will bring Louisiana's program back into satisfactory adherence. Great Bay and Chesapeake Bay, VA NERRs were found to be satisfactorily adhering to programmatic requirement of the NERR system.

Copies of these final evaluation findings may be obtained upon request from: Vickie Allin, Chief, Policy Coordination Division, Office of Ocean and Coastal Resource Management, NOS/NOAA, 1305 East-West Highway, 11th Floor, Silver Spring, Maryland 20910 (301) 713–3087.

(Federal Domestic Assistance Catalog 11.419 Coastal Zone Management Program Administration)

Dated: January 26, 1995.

W. Stanley Wilson,

Assistant Administrator for Ocean Services and Coastal Zone Management.

[FR Doc. 95–2514 Filed 2–1–95; 8:45 am]

BILLING CODE 3510–08–M

Evaluation of State Coastal Management Programs

AGENCY: Office of Ocean and Coastal Resource Management, National Ocean Service, National Oceanic and Atmospheric Administration (NOAA), DOC.

ACTION: Notice of intent to evaluate.

SUMMARY: The NOAA Office of Ocean and Coastal Resource Management (OCRM) announces its intent to evaluate the performance of the Delaware and Massachusetts Coastal Management Programs.

These evaluations will be conducted pursuant to section 312 of the Coastal Zone Management Act of 1972 (CZMA), as amended. The CZMA requires a continuing review of the performance of coastal states with respect to coastal management. Evaluation of Coastal Management Programs requires findings concerning the extent to which a state has met the national coastal management objectives, adhered to its Coastal Program Management Plan approved by the Secretary of Commerce, and adhered to the terms of financial assistance awards funded under the CZMA. The evaluations will include a site visit, consideration of public comments, and consultations with interested Federal, State, and local agencies and members of the public. Public meetings are held as part of the site visits.

Notice is hereby given of the dates of the site visits for the listed evaluations, and the dates, local times, and locations of public meetings during the site visits.

The Delaware Coastal Management Program evaluation site visit will be from March 6 to March 10, 1995. A public meeting will be held on Tuesday, March 7, 1995 at 7:00 p.m. in the Department of Natural Resources and Environmental Control Auditorium, 89 Kings Highway, Dover, Delaware.

The Massachusetts Coastal Management Program evaluation site visit will be from March 20 to March 24, 1995. Public meetings will be held on Tuesday, March 21, 1995 at 7:00 p.m. at the Sawyer Free Library, 2 Dale Avenue, Gloucester, Massachusetts and on Thursday, March 23, 195 at 7:30 p.m. at the Massachusetts Maritime Academy, Storer Building, room 21, Buzzards Bay, Massachusetts.

The States will issue notice of the public meeting(s) in a local newspaper(s) at least 45 days prior to the public meeting(s), and will issue other timely notices as appropriate.

Copies of the State's most recent performance reports, as well as OCRM's notifications and supplemental request letters to the States, are available upon request from OCRM. Written comments from interested parties regarding these Programs are encouraged and will be accepted until 15 days after the site visit. Please direct written comments to Vickie A. Allin, Chief, Policy Coordination Division, Office of Ocean and Coastal Resource Management, NOS/NOAA, 1305 East-West Highway, Silver Spring, Maryland, 20910. When the evaluation is completed, OCRM will place a notice in the **Federal Register** announcing the availability of the Final Evaluation Findings.

FOR FURTHER INFORMATION CONTACT: Vickie A. Allin, Chief, Policy Coordination Division, Office of Ocean and Coastal Resource Management, NOS/NOAA, 1305 East-West Highway, Silver Spring, Maryland, 20910, (301) 713–3090, ext. 126.

(Federal Domestic Assistance Catalog 11.419 Coastal Zone Management Program Administration)

Dated: January 26, 1995.

W. Stanley Wilson,

Assistant Administrator for Ocean Services and Coastal Zone

[FR Doc. 95–2515 Filed 2–1–95; 8:45 am]

BILLING CODE 3510–08–M

CORPORATION FOR NATIONAL AND COMMUNITY SERVICE

Learn and Serve America: Higher Ed, Availability of Funds

AGENCY: Corporation for National and Community Service.

ACTION: Notice of availability of funds.

SUMMARY: The Corporation for National Service announces the availability of $3.5 million to support new grants for Learn and Serve America: Higher Education programs. Individual institutions of higher education, consortia of institutions of higher education, and nonprofit organizations or public agencies, including states, working in partnership with one or more institutions of higher education are eligible to apply. These application guidelines are for new applicants only. Current Learn and Serve: Higher Education grantees should contact their program officers for information about the renewal process. The Corporation will also offer a series of conference calls to assit programs in preparing their applications.

DATES: All applications must be received by 3:30 p.m., Daylight Savings Time, April 12, 1995, to be eligible.

ADDRESSES: Applications should be submitted to The Corporation for National Service, Learn and Serve America: Higher Education, 9th Floor, Box HE, 1201 New York Ave. NW., Washington, DC 20525. Facsimiles will not be accepted.

FOR FURTHER INFORMATION CONTACT: If you have questions about the application process, you may call or write the Corporation for National Service, Learn and Serve America: Higher Education, 1201 New York Ave. NW., Washington, DC 20525. Phone:

(202) 606–5000 ext. 474; TTD: (202) 565–2799.

SUPPLEMENTARY INFORMATION: Learn and Serve America: Higher Education supports efforts to make service an integral part of the education and life experiences of students in the nation's colleges and universities. Through this grant program, the Corporation supports a diversity of service-learning initiatives that involve a wide array of students, communities, and institutions of higher education. The Corporation expects every applicant to articulate program objectives in each of the following three impact areas:

1. Community Impact—Engaging students in meeting the educational, public safety, human, and environmental needs of communities.

2. Participant Impact—Enhancing students' academic learning, their sense of social responsibility, and their civic skills through service-learning.

3. Institutional Impact—Increasing the number, quality, and sustainability of opportunities for students to serve by strengthening infrastructure and building capacity within and across the nation's institutions of higher education. Approximately $3.5 million to support new grants may be awarded to individual institutions of higher education (as defined in the Higher Education Act of 1965), consortia of institutions of higher education, and nonprofit organizations or public agencies, including states, working in partnership with one or more institutions of higher education are eligible to apply.

Application Assistance

The Corporation will provide application assistance via a series of conference calls during February and March. During these calls, Corporation staff will answer questions related to the application guidelines. These calls will not serve as an opportunity for prospective applicants to obtain individual feedback on proposal ideas. If you would like to participate in a conference call, please call (202) 606–5000 ext. 117. The Corporation staff will assume that conference call participants have read the application guidelines thoroughly.

Authority: 42 U.S.C. 12501 et seq.

Dated: January 27, 1995.

Terry Russell,

General Counsel, Corporation for National Service.

[FR Doc. 95–2544 Filed 2–1–95; 8:45 am]

BILLING CODE 6050–28–P

DEPARTMENT OF DEFENSE

GENERAL SERVICES ADMINISTRATION

NATIONAL AERONAUTICS AND SPACE ADMINISTRATION

OMB Clearance Request for Subcontractor Payments

AGENCIES: Department of Defense (DOD), General Services Administration (GSA), and National Aeronautics and Space Administration (NASA).

ACTION: Notice to new request for OMB clearance.

SUMMARY: Under the provisions of the Paperwork Reduction Act of 1980 (44 U.S.C. 3501), the Federal Acquisition Regulation (FAR) Secretariat has submitted to the Office of Management and Budget (OMB) a request to review and approve a new information collection requirement concerning Subcontractor Payments.

DATES: Comments may be submitted on or before April 3, 1995.

ADDRESSES: Send comments to Mr. Peter Weiss, FAR Desk Officer, OMB, room 10236, NEOB, Washington, DC 20503.

FOR FURTHER INFORMATION CONTACT: Beverly Fayson, Office of Federal Acquisition Policy, GSA (202) 501–4755.

SUPPLEMENTARY INFORMATION:

A. Purpose

This is a request for review and approval of a new information collection requirement. Part 28 of the Federal Acquisition Regulation (FAR) contains guidance related to obtaining financial protection against damages under Government contracts (*e.g.,* use of bonds, bid guarantees, insurance, etc.). FAR Part 32 provides guidance related to contract financing and payment. FAR Part 52 contains the texts of solicitation provisions and contract clauses. The proposed rule amends FAR 28 and 32 to implement a new statutory requirement for information to be provided by the Federal Government and Federal contractors relating to payment bonds furnished under construction contracts which are subject to the Miller Act (40 U.S.C. 270a–270d). This new collection requirement is mandated by Section 806 of the National Defense Authorization Act for Fiscal Years 1992 and 1993 (Public Law 102–190), as amended by Sections 2091 and 8105 of the Federal Acquisition Streamlining Act of 1994 (Public Law 103–355). Sections 2091 and 8105 require the Federal Acquisition Regulations Council publish, for Federal-wide applicability, regulations that were previously required to be published by the Secretary of Defense for applicability to the Department of Defense. The following reflects the transfer, with minor changes, of the existing Department of Defense's implementation of these statutory requirements to the Federal Acquisition Regulation. A new clause at 52.228–00, Subcontractor Requests for Bonds, implements Sections 806(a) (2) and (3) of Public Law 102–190, which specify that, upon the request of a prospective subcontractor or supplier offering to furnish labor or material for the performance of a construction contract for which a payment bond has been furnished to the United States pursuant to the Miller Act, the contractor shall promptly provide a copy of such payment bond to the requestor.

In conjunction with performance bonds, payment bonds are used in Government construction contracts to secure fulfillment of the contractor's obligations under the contract and to assure that the contractor makes all payments, as required by law, to persons furnishing labor or material in performance of the contract. The proposed rule will provide prospective subcontractors and suppliers a copy of the payment bond furnished by the contractor to the Governor for the performance of a Federal construction contract subject to the Miller Act. It is expected that prospective subcontractors and suppliers will use this information to determine whether to contract with that particular prime contractor. This information has been and will continue to be available from the Government. The requirement for contractors to provide a copy of the payment bond upon request to any prospective subcontractor or supplier under the Federal construction contract is contained in Sections 806(a)(2) and (3) of Public Law 102–190, as amended by Sections 2091 and 8105 of Public Law 103–355.

B. Annual Reporting Burden

Public reporting burden for this collection of information is estimated to average *0.50* hours per response, including the time for reviewing instructions, searching existing data sources, gathering and maintaining the data needed, and completing and reviewing the collection of information. Send comments regarding this burden estimate or any other aspect of this collection of information, including suggestions for reducing this burden, to General Services Administration, FAR Secretariat, 18th & F Streets, NW., room

4037, Washington, DC 20405, and to the FAR Desk Officer, Office of Information and Regulatory Affairs, Office of Management and Budget, Washington, DC 20503.

The annual reporting burden is estimated as follows: Respondents, *5,000*; responses per respondent, *10*; total annual responses, *50,000*; preparation hours per response, *0.50*; and total response burden hours, *25,000*.

OBTAINING COPIES OF PROPOSALS: Requester may obtain copies of OMB applications or justifications from the General Services Administration, FAR Secretariat (VRS), room 4037, Washington, DC 20405, telephone (202) 501–4755. Please cite OMB clearance request regarding Subcontractor Payments, FAR case 94–762, in all correspondence.

Dated: January 27, 1995.

Beverly Fayson,

FAR Secretariat.

[FR Doc. 95–2542 Filed 2–1–95; 8:45 am]

BILLING CODE 6820–34–M

DEPARTMENT OF DEFENSE

Office of the Secretary

Defense Intelligence Agency, Scientific Advisory Board Panel Closed Meeting

AGENCY: Department of Defense, Defense Intelligence Agency.

ACTION: Notice.

SUMMARY: Pursuant to the provisions of Subsection (d) of Section 10 of Public Law 92–463, as amended by Section 5 of Public Law 94–409, notice is hereby given that a closed meeting of the DIA Scientific Advisory Board has been scheduled as follows:

Dates: February 21–22, 1995 (830–400).

Addresses: The Defense Intelligence Agency, Bolling AFB, Washington, D.C. 20340–5100.

For further information contact: Dr. W.S. Williamson, Executive Secretary, DIA Scientific Advisory Board, Washington, DC 20340–1328 (202) 373–4930.

Supplementary information: The entire meeting is devoted to the discussion of classified information as defined in Section 552b(c)(I), Title 5 of the U.S. Code and therefore will be closed to the public. The Board will receive briefings on and discuss several current critical intelligence issues and advise the Director, DIA, on related scientific and technical matters.

Dated: January 27, 1995.

Patricia L. Toppings,

Alternate OSD Federal Register Liaison Officer, Department of Defense.

[FR Doc. 95–2506 Filed 2–1–95; 8:45 am]

BILLING CODE 5000–04–M

DEPARTMENT OF ENERGY

Federal Energy Regulatory Commission

[Docket No. EL95–21–000, et al.]

City of McPherson, Board of Public Utilities, et al.; Electric Rate and Corporate Regulation Filings

January 26, 1995.

Take notice that the following filings have been made with the Commission:

1. City of McPherson, Board of Public Utilities

[Docket No. EL95–21–000]

Take notice that on January 20, 1995, the City of McPherson, Board of Public Utilities tendered for filing a letter requesting waiver from the Federal Energy Regulatory Commission to file Form 715.

Comment date: February 23, 1995, in accordance with Standard Paragraph E at the end of this notice.

2. NorAm Energy Services

[Docket No. ER94–1247–003]

Take notice that on January 10, 1995, NorAm Energy Services tendered for filing its quarterly informational filing in the above-referenced docket.

Comment date: February 14, 1995, in accordance with Standard Paragraph E at the end of this notice.

3. R.J. Dahnke & Associates

[Docket No. ER94–1352–002]

Take notice that on January 17, 1995, R.J. Dahnke & Associates (Dahnke), filed certain information as required by the Commission's August 10, 1994 letter order in Docket No. ER94–1352–000. Copies of Dahnke's informational filing are on file with the Commission and are available for inspection.

4. Kaztex Energy Services, Inc.

[Docket No. ER95–295–000]

Take notice that on January 17, 1995, Kaztex Energy Services, Inc. tendered for filing an amendment in the above-referenced docket.

Comment date: February 9, 1995, in accordance with Standard Paragraph E at the end of this notice.

5. CINergy Operation Companies

[Docket No. ER95–406–000]

Take notice that on December 23, 1994, CINergy Operating Companies tendered for filing a response to the Federal Energy Regulatory Commission's orders in Cincinnati Gas and Electric Co. and PSI Energy, Inc., 69 FERC ¶ 61,005 (1994), and Cincinnati Gas and Electric Co. and PSI Energy, Inc., 65 FERC ¶ 61,088 (1994), regarding the emission allowance provisions of the March 4, 1994 CINergy Operating Agreement. The provisions of the Operating Agreement related to the inclusion of emission allowances in wholesale rates will not be implemented at this time.

Comment date: February 9, 1995, in accordance with Standard Paragraph E at the end of this notice.

6. Central Vermont Public Service Corporation

[Docket No. ER95–437–000]

Take notice that on January 17, 1995, Central Vermont Public Service Corporation (CVPS), tendered for filing a notice of termination of service under FPC Electric Tariff, First Revised Volume No. 1, to New Hampshire Electric Cooperative, Inc. (NHEC), effective at the end of the day on March 17, 1995. Such termination is the result of notification by NHEC to CVPS of the termination of service as of March 18, 1995.

Comment date: February 9, 1995, in accordance with Standard Paragraph E at the end of this notice.

7. PacifiCorp

[Docket No. ER95–438–000]

Take notice that PacifiCorp on January 17, 1995, tendered for filing the annual facilities charge calculation under, PacifiCorp Rate Schedule FERC No. 298.

PacifiCorp requests a waiver of prior notice and that an effective date of December 31, 1994 be assigned to the annual facilities charge calculation.

Copies of this filing were supplied to Southern California Edison Company, Pacific Gas & Electric Company, the Washington Utilities and Transportation Commission, the Public Utility Commission of Oregon and the Public Utilities Commission of the State of California.

Comment date: February 9, 1995, in accordance with Standard Paragraph E at the end of this notice.

8. New York State Electric & Gas Corporation

[Docket No. ER95–443–000]

Take notice that New York State Electric & Gas Corporation (NYSEG), on January 17, 1995, tendered for filing as an initial rate schedule, an agreement with Citizens Power and Light Corporation (Citizens). The agreement provides a mechanism pursuant to which the parties can enter into separately scheduled transactions under which NYSEG will sell to Citizens and Citizens will purchase from NYSEG

either capacity and associated energy only as the parties may mutually agree.

NYSEG requests that the agreement become effective on January 18, 1995, so that the parties may, if mutually agreeable, enter into separately scheduled transactions under the agreement. NYSEG has requested waiver of the notice requirements for good cause shown.

NYSEG served copies of the filing upon the New York State Public Service Commission and Citizens.

Comment date: February 9, 1995, in accordance with Standard Paragraph E at the end of this notice.

9. Timothy L. Guzzle

[Docket No. ID–2509–001]

Take notice that on December 30, 1994, Timothy L. Guzzle (Applicant), tendered for filing a supplement in the above-referenced docket to hold the following positions:

Chairman of the Board & CEO—Tampa Electric Company.

Director—NationsBank Corporation.

Comment date: February 9, 1995, in accordance with Standard Paragraph E at the end of this notice.

10. Air Products and Chemicals, Inc.

[Docket No. QF84–166–001]

On January 18, 1995, Air Products and Chemicals, Inc. (applicant), of P.O. Box 538, Allentown, Pennsylvania, submitted for filing an application for recertification of a facility pursuant to § 292.207(b) of the Commission's Regulations. No determination has been made that the submittal constitutes a complete filing.

According to the applicant, the topping-cycle cogeneration facility is located in New Orleans, Louisiana. The Commission previously certified the facility as a qualifying cogeneration facility, *Air Products and Chemicals, Inc.*, 27 FERC ¶ 62,125 (1984). The instant application for recertification is due to the addition of new equipment, reconfiguration of exiting equipment and an increase in the maximum net capacity to 27.5 MW.

Comment date: Thirty days after the date of publication of this notice in the **Federal Register**, in accordance with Standard Paragraph E at the end of this notice.

11. Air Products and Chemicals, Inc.

[Docket No. QF84–166–002]

On January 18, 1995, Air Products and Chemicals, Inc. (Applicant), of P.O. Box 538, Allentown, Pennsylvania, submitted for filing an application for certification of a facility as a qualifying small power production facility pursuant to § 292.207(b) of the Commission's Regulations. No determination has been made that the submittal constitutes a complete filing.

According to the Applicant, the small power production facility is located in New Orleans, Louisiana and will consist of three heat recovery boilers and two steam turbines driving a single generator. The maximum net electric power production capacity will be approximately 6.5 MW. The primary energy source will be waste in the form of waste heat.

Comment date: Thirty days after the date of publication of this notice in the **Federal Register**, in accordance with Standard Paragraph E at the end of this notice.

12. Auburndale Power Partners, Limited Partnership

[Docket Nos. QF93–29–003 and EL95–20–000]

Take notice that on January 20, 1995, Auburndale Power Partners, L.P. (Auburndale), tendered for filing a request for limited waiver of the Commission's Regulations under the Public Utility Regulatory Policies Act of 1978 (PURPA). Auburndale requests the Commission to temporarily waive the operating standard for qualifying cogeneration facilities as set forth in Section 292.205 of the Commission's Regulations, implementing Section 201 of PURPA, as amended, 18 CFR 292.205, with respect to its 158.8 MW cogeneration facility located in Polk County, near Auburndale, Florida. Specifically, Aburndale requests waiver of the operating standard for the calendar year 1994.

Comment date: Thirty days after the date of publication of this notice in the **Federal Register**, in accordance with Standard Paragraph E at the end of this notice.

Standard Paragraphs

E. Any person desiring to be heard or to protest said filing should file a motion to intervene or protest with the Federal Energy Regulatory Commission, 825 North Capitol Street, N.E., Washington, D.C. 20426, in accordance with Rules 211 and 214 of the Commission's Rules of Practice and Procedure (18 CFR 385.211 and 18 CFR 385.214). All such motions or protests should be filed on or before the comment date. Protests will be considered by the Commission in determining the appropriate action to be taken, but will not serve to make protestants parties to the proceeding. Any person wishing to become a party must file a motion to intervene. Copies of this filing are on file with the Commission and are available for public inspection.

Linwood A. Watson, Jr.,

Acting Secretary.

[FR Doc. 95–2520 Filed 2–1–95; 8:45 am]

BILLING CODE 6717–01–P

[Docket No. CP95–35–000]

EcoEléctrica, L.P.; Notice of Application

January 27, 1995.

Take notice that on October 25, 1994, EcoEléctrica, L.P. (EcoEléctrica), a Bermuda Limited Partnership, Scotiabank Plaza, Suite 902, 273 Ponce de Leon Avenue, Hato Rey, Puerto Rico 00918, filed in Docket No. CP95–35–000, an application pursuant to Section 3 of the Natural Gas Act for approval of a point of import for liquefied natural gas (LNG), all as more fully set forth in the application and subsequent supplemental filings which are on file with the Commission and open to public inspection.

Specifically, EcoEléctrica intends to construct and operate LNG facilities on a 36-acre site in Guayanilla Bay near Ponce, Puerto Rico. EcoEléctrica states that the ''jurisdictional'' facilities consist of a marine unloading facility, two LNG storage tanks with individual capacities of up to one million barrels, and a vaporization system. In addition, EcoEléctrica proposes to construct a ''non-jurisdictional'' cogeneration facility that will use the imported LNG for power generation. The electricity generated by EcoEléctrica's cogeneration facility will be purchased by the Puerto Rico Electric Power Authority (PREPA), the government-created public utility which supplies nearly all of the electric power consumed in Puerto Rico. PREPA has identified a need for additional electric generating capacity by the year 2000 to meet future demand growth, enhance system reliability and to diversify the fuel sources that generate electricity. A supply contract for the LNG has not been finalized; EcoEléctrica states that it will follow after the finalization of the power purchase agreement being negotiated with PREPA.

Any person desiring to be heard or to make any protest with reference to said application should on or before February 17, 1995, file with the Federal Energy Regulatory Commission, Washington, D.C. 20426, a motion to intervene or a protest in accordance with the requirements of the Commission's Rules of Practice and Procedure (18 CFR 385.214 or 385.211). All protests filed with the Commission

will be considered by it in determining the appropriate action to be taken but will not serve to make the protestants parties to the proceeding. Any person wishing to become a party to a proceeding or to participate as a party in any hearing therein must file a motion to intervene in accordance with the Commission's Rules.

Take further notice that, pursuant to the authority contained in and subject to jurisdiction conferred upon the Federal Energy Regulatory Commission by Sections 7 and 15 of the Natural Gas Act and the Commission's Rules of Practice and Procedure, a hearing will be held without further notice before the Commission or its designee on this application if no motion to intervene is filed within the time required herein, if the Commission on its own review of the matter finds that a grant of the certificate is required by the public convenience and necessity. If a motion for leave to intervene is timely filed, or if the Commission on its own motion believes that a formal hearing is required, further notice of such hearing will be duly given.

Under the procedure herein provided for, unless otherwise advised, it will be unnecessary for EcoEléctrica to appear or be represented at the hearing.

Linwood A. Watson, Jr.,

Acting Secretary.

[FR Doc. 95–2522 Filed 2–1–95; 8:45 am]

BILLING CODE 6717–01–M

[Docket No. CP95–166–000]

Koch Gateway Pipeline Company; Request Under Blanket Authorization

January 27, 1995.

Take notice that on January 19, 1995, Koch Gateway Pipeline Company (Koch Gateway), P.O. Box 1478, Houston, Texas 77251–1478, filed in Docket No. CP95–166–000 a request pursuant to §§ 157.205 and 157.211 of the Commission's Regulations under the Natural Gas Act (18 CFR 157.205, 157.211) for authorization to reactivate and operate an existing one-inch delivery tap in Mobile County, Alabama, under Koch Gateway's blanket certificate issued in Docket No. CP82–430–000 pursuant to Section 7 of the Natural Gas Act, all as more fully set forth in the request that is on file with the Commission and open to public inspection.

Koch Gateway proposes to reactivate an existing one-inch tap on its transmission line at Index 311 (Section 30, T–2–S, R–4–W, Mobile County, Alabama) to provide a new delivery point to serve South Alabama Utility District (South Alabama), which in turn will serve West Wilmer in Mobile County, Alabama. Koch Gateway states it had previously requested authority to install a new tap near this location and was granted authority in Docket No. CP94–788. However the shipper, South Alabama, has requested that the proposal be changed to the reactivating of an existing tap for service to its customer. South Alabama, according to Koch Gateway, will construct and own the meter and regulatory station and appurtenant piping necessary to connect its facilities to Koch Gateway's Index 311. South Alabama's average daily volume, according to Koch Gateway, is to be 100 MMBtu per day with peak day not to exceed 150 MMBtu. The reactivation of the delivery tap will be entirely within Koch Gateway's existing pipeline right-of-way.

Koch Gateway states that it currently provides No Notice Service (NNS) to South Alabama pursuant to the blanket transportation certificate and NNS agreement filed with the Commission in Docket No. ST94–1532. The current NNS contract reflects total maximum daily quantity for South Alabama as being 2,935 MMBtu for winter, 1,174 for summer and 1,761 MMBtu for shoulder months.

Koch Gateway states that the proposed facilities installation and modification won't impact its curtailment plan since the requested service remains within current entitlements, there is sufficient capacity to render service without detriment or disadvantage to existing customers and its tariff doesn't prohibit the proposed addition of a delivery tap.

Any person or the Commission's staff may, within 45 days after issuance of the instant notice by the Commission, file pursuant to Rule 214 of the Commission's Procedural Rules (18 CFR 385.214) a motion to intervene or notice of intervention and pursuant to § 157.205 of the Regulations under the Natural Gas Act (18 CFR 157.205) a protest to the request. If no protest is filed within the time allowed therefore, the proposed activity shall be deemed to be authorized effective the day after the time allowed for filing a protest. If a protest is filed and not withdrawn within 30 days after the time allowed for filing a protest, the instant request shall be treated as an application for authorization pursuant to Section 7 of the Natural Gas Act.

Linwood A. Watson, Jr.,

Acting Secretary.

[FR Doc. 95–2523 Filed 2–1–95; 8:45 am]

BILLING CODE 6717–01–M

[Docket No. CP95–177–000]

Burton McDaniel, M.D. v. East Tennessee Natural Gas Company; Complaint

January 26, 1995.

Take notice that on January 18, 1995, Burton McDaniel, M.D. (McDaniel), 11685 Alpharetta Highway, Roswell, Georgia 30076, filed with the Commission in Docket No. CP95–177–000 a complaint, pursuant to Rule 206 of the Commission's Rules of Practice and Procedure, against East Tennessee Natural Gas Company (East Tennessee), alleging that East Tennessee is misapplying its authority under the Part 157, subpart F Blanket Certificate of Public Convenience and Necessity issued in Docket No. CP82–412–000. Specifically, McDaniel alleges that the East Tennessee's currently proposed project, involving the construction and operation of facilities to interconnect with facilities proposed by Southern Natural Gas Company in Docket No. CP94–682–000, can be completed in a less intrusive manner and that its current plans violate the intentions of the certificate issued in Docket No. CP82–412–000.

Any person desiring to be heard or to make a protest with reference to McDaniel's complaint should file with the Federal Energy Regulatory Commission, 825 North Capitol Street, N.E., Washington, D.C. 20426, a motion to intervene or protest in accordance with the Commission's Rules of Practice and Procedure (18 CFR 385.211 or 385.214). All such motions, together with the answer of respondent to the complaint, should be filed on or before February 6, 1995. Any person desiring to become a party must file a motion to intervene. A copy of the complaint is on file with the Commission and available for public inspection.

Lois D. Cashell,

Secretary.

[FR Doc. 95–2524 Filed 2–1–95; 8:45 am]

BILLING CODE 6717–01–M

[Project No. 2320–005–NY Project No. 2330–007–NY]

Niagara Mohawk Power Corp.; Notice of Public Scoping Meetings

January 27, 1995.

The Federal Energy Regulatory Commission (Commission) has received applications for new license (relicense) from the Niagara Mohawk Power Corporation (NIMO) for the following two existing hydropower projects owned and operated by NIMO on the Raquette River in St. Lawrence County,

New York: The Middle Raquette River Project, FERC No. 2320, consisting of the Highley, Colton, Hannawa, and Sugar Island developments; and the Lower Raquette River Project, FERC No. 2330, consisting of the Norwood, East Norfolk, Norfolk, and Raymondville developments.

The Commission staff will prepare and issue a draft multiple-project environmental impact statement (EIS) for review by all interested parties. All comments filed on the draft EIS will be analyzed by the FERC staff and considered in a final EIS.

One element of the EIS process is scoping. This activity is initiated early to:

- Identify reasonable alternative operational procedures and environmental enhancement measures that should be evaluated in the EIS;
- Delineate significant environmental issues related to the operation of the existing projects;
- Determine the depth of analysis for issues that will be discussed in the EIS; and
- Identify resource issues that are of lesser importance and, consequently, do not require detailed analysis in the EIS.

Scoping Meetings

The FERC staff will conduct two scoping meetings: The evening meeting is designed to obtain input from the general public, while the morning meeting will focus on resource agency concerns. All interested individuals, organizations, agencies, and Indians Tribes are invited to attend either or both meetings in order to assist staff in identifying the environmental issues that should be analyzed in the multiple-project EIS.

To help focus discussions, a preliminary EIS scoping document outlining subject areas to be addressed at the meetings will be distributed by mail to all person and entities on the FERC mailing lists for the Middle and Lower Raquette River Projects. Copies of the preliminary scoping document also will be made available at the scoping meetings.

The evening meeting for the general public will be held from 7 p.m. until 11 p.m. on Tuesday, March 21, 1995, in Room 177 of the New York State Center for Advanced Materials Processing in Potsdam, New York. This facility is located on Clarkson University's Hill Campus, adjacent to the Cheel Campus Center. Attendees should use the Maple Street entrance to the University and Parking Area 9.

The agency-oriented meeting will be held at the same location on Wednesday, March 22, 1995, from 9 a.m. until 12 p.m.

Scoping Meeting Procedures

Both meetings, which will be recorded by a stenographer, will become part of the formal record of the Commission's proceeding on the Middle and Lower Raquette River Projects. Individuals presenting statements at the meetings will be asked to sign in before the meetings start and to identify themselves for the record.

Concerned parties are encouraged to speak during the public meetings. Speaking time allowed for individuals at the evening public meeting will be determined before that meeting, based on the number of person wishing to speak and the approximate amount of time available for the session. All speakers will be provided at least five minutes to present their views.

Scoping Meeting Objectives

At the scoping meetings, the staff will:

- Summarize the environmental issues tentatively identified for analysis in the multiple-project EIS;
- Identify resource issues that are of lesser importance and, therefore, do not require detailed analysis:
- Solicit from the meeting participants all available information, especially quantifiable data, concerning significant local resources; and
- Encourage statements from experts and the public on issues that should be analyzed in the EIS.

Information Requested

Federal and state resource agencies, local government officials, interested groups, area residents, and concerned individuals are requested to provide any information they believe will assist the Commission staff to evaluate the environmental impacts associated with relicensing the two projects. The types of information sought included the following:

- Data, reports, and resource plans that characterize the physical, biological or social environments in the vicinity of the projects; and
- Information and data that helps staff identify or evaluate significant environmental issues.

Scoping information and associated comments should be submitted to the Commission no later than April 21, 1995. Written comments should be provided at the scoping meetings or mailed to the Commission, as follows: Lois Cashell, Secretary, Federal Energy Regulatory Commission, 825 North Capitol St., N.E., Washington, DC 20426.

All filings sent to the Secretary of the Commission should contain an original and 8 copies. Failure to file an original and 8 copies may result in appropriate staff not receiving the benefit of your comments in a timely manner. See 18 CFR 4.34(h).

All correspondence should show the following caption on the first page:

FERC No. 2320–005—NY, Middle Raquette River Project
FERC No. 2330–007—NY, Lower Raquette River Project

Intervenors and interceders (as defined in 18 CFR 385.2010) who file documents with the Commission are reminded of the Commission's Rules of Practice and Procedure requiring them to serve a copy of all documents filed with the Commission on each person whose name is listed on the official service list for this proceeding. See 18 CFR 4.34(b).

For further information, please contact Jim Haimes in Washington, DC at (202) 219–2780.

Linwood A. Watson, Jr.,

Acting Secretary.

[FR Doc. 95–2521 Filed 2–1–95; 8:45 am]

BILLING CODE 6717–01–M

[Docket No. RP95–72–001]

Northern Natural Gas Company; Compliance Filing

January 27, 1995.

On December 30, 1994, the Commission issued an order accepting and suspending tariff sheets subject to refund and conditions and establishing a technical conference in the above referenced docket. Ordering Paragraph (B) of that order required Northern Natural Gas Company (Northern) to file workpapers and other data in support of the proposed increase.

Take notice that on January 17, 1995, Northern in response to the Commission's order filed workpapers and schedules further detailing support for the revised Reconciliation Adjustment (RA). Northern states that it is filing Revised Schedule Nos. 1, 2 and 4 and 4a to the December 1, 1994 filing which include additional footnotes which more specifically detail the adjustments made by Northern.

Northern states that copies of the filing have been mailed to all of Northern's customers and interested state commissions.

Any person desiring to protest said filing should file a protest with the Federal Energy Regulatory Commission, 825 North Capitol Street, N.E., Washington, D.C. 20426, in accordance with rule 211 of the Commission's Rules of Practice and Procedure 18 CFR 385.211. All such protests should be

filed on or before February 3, 1995. Protests will be considered by the Commission in determining the appropriate action to be taken, but will not serve to make protestants parties to the proceeding. Copies of this filing are on file with the Commission and are available for public inspection.

Linwood A. Watson, Jr.,

Acting Secretary.

[FR Doc. 95–2525 Filed 2–1–95; 8:45 am]

BILLING CODE 6717–01–M

EXECUTIVE OFFICE OF THE PRESIDENT

Open Meetings of Policy Dialog Advisory Committee To Assist in the Development of Measures to Significantly Reduce Greenhouse Gas Emissions From Personal Motor Vehicles

AGENCY: Executive Office of the President.

ACTION: Meetings of Policy Dialog Advisory Committee.

SUMMARY: The Executive Office of the President has established a Policy Dialog Advisory Committee to assist in the development of measures to significantly reduce greenhouse gas emissions from personal motor vehicles. The sixth meeting of this committee will be held on February 15 and 16, 1995. The committee's meetings are open to the public without need for advance registration.

DATES: The committee will meet on February 15, 1995 from 9:00 a.m. to 5:00 p.m., and on February 16, 1995 from 9:00 a.m. to 5:00 p.m.

ADDRESSES: Both sessions of the meeting will be held at the Offices of the South Coast Air Quality Management District, 21865 East Copley Drive, Diamon Bar, California 91765–4182. (The nearest airport to Diamond Bar is Ontario Airport.)

FOR FURTHER INFORMATION CONTACT: For information pertaining to the substantive issues to be dealt with by the advisory committee, contract: Ellen Seidman, Special Assistant to the President for Economic Policy, Washington, D.C. 20500, phone (202 456–2802, fax (202) 456–2223; Henry Kelly, Assistant Director for Technology, Office of Science and Technology Policy, phone (202) 456–6034, fax (202) 456–6023; Wesley Warren, Associate Director, Office on Environmental Policy, phone (202) 456–6224, fax (202) 456–2710; or Michael Toman, Senior Economist, Council of Economic Advisers, phone (202) 395–5012, fax (202) 395–6853. For information pertaining to administrative matters contact: Deborah Dalton, Environmental Protection Agency, 401 M Street, S.W., Washington, D.C. 20460, phone (202) 260–5495.

Information about the Committee is also available on the Technology Transfer Network of the Office of Air Quality Planning & Standards of the Environmental Protection Agency, which can be accessed electronically by calling (919) 541–5742. Help in accessing the system can be obtained by calling (919) 541–5384 between 1:00 and 5:00 Eastern Standard Time. Neither of these numbers is a toll-free number. The Committee recently has established a toll-free information, which provides recorded information about the Committee, including meeting dates and locations. The toll-free number is 1–800–884–9190. (In the local Washington, DC area, call (202) 366–2373.)

AGENDA FOR THE MEETING: At the meeting, the Committee will:

- Discuss assumptions in baseline scenarios with a goal of finalizing agreements;
- Review a draft of the interim report;
- Hold meetings of ad hoc policy groups on vehicle miles travelled and alternative fuels; and
- Begin analyzing mechanisms in the fuel economy policy options.

Dated: January 31, 1995.

W. Bowman Cutter,

Deputy Assistant to the President for Economic Policy

John H. Gibbons,

Director, Office of Science and Technology Policy

Kathleen A. McGinty,

Chair, Council on Environmental Quality

[FR Doc. 95–2704 Filed 1–31–95; 11:45 am]

BILLING CODE 3195–01–M

FEDERAL MARITIME COMMISSION

Agreement(s) Filed

The Federal Maritime Commission hereby gives notice of the filing of the following agreement(s) pursuant to section 5 of the Shipping Act of 1984.

Interested parties may inspect and obtain a copy of each agreement at the Washington, D.C. Office of the Federal Maritime Commission, 800 North Capitol Street, N.W., 9th Floor. Interested parties may submit comments on each agreement to the Secretary, Federal Maritime Commission, Washington, D.C. 20573, within 10 days after the date of the **Federal Register** in which this notice appears. The requirements for comments are found in § 572.603 of Title 46 of the Code of Federal Regulations. Interested persons should consult this section before communicating with the Commission regarding a pending agreement.

Agreement No.: 202–010424–025.

Title: United States Atlantic and Gulf Hispaniola Steamship Freight Association.

Parties:

Crowley American Transport, Inc.
Kirk Line, Ltd.
Puerto Rico Maritime Shipping Authority
Sea-Land Service, Inc.
Seaboard Marine, Ltd.
Tropical Shipping and Construction Co., Ltd.

Synopsis: The proposed amendment deletes Haiti from the geographical scope of the Agreement. It also deletes Seaboard's limited participation in the trade between the U.S. and the Dominican Republic.

Agreement No.: 217–011488.

Title: CSAV/Lauritzen Reefers Space Charter Agreement.

Parties:

Compania Sud Americana de Vapores S.A.
Lauritzen Reefers A/S

Synopsis: The proposed Agreement permits the parties to charter space from each other in the trade between ports in Chile and United States Atlantic and Pacific Coast ports.

Dated: January 27, 1995.

By Order of the Federal Maritime Commission.

Joseph C. Polking,

Secretary.

[FR Doc. 95–2534 Filed 2–1–95; 8:45 am]

BILLING CODE 6730–01–M

Ocean Freight Forwarder License Revocations

Notice is hereby given that the following ocean freight forwarder licenses have been revoked by the Federal Maritime Commission pursuant to section 19 of the Shipping Act of 1984 (46 U.S.C. app. 1718) and the regulations of the Commission pertaining to the licensing of ocean freight forwarders, 46 CFR Part 510.

License Number: 3785
Name: Isaca Cargo International, Inc.
Address: 3250 N.W. 77th Ct., Ste. 200–A, Miami, FL 33122
Date Revoked: December 16, 1994
Reason: Failed to furnish a valid surety bond.

License Number: 3579
Name: M.J. Shea & Co., Inc.

Address: 3310 Green Park Circle, Charlotte, NC 28217
Date Revoked: December 28, 1994
Reason: Surrendered license voluntarily.

License Number: 1644
Name: Intrepid Shipping Corporation
Address: 80 Sheridan Blvd., Inwood, NY 11696
Date Revoked: January 4, 1995
Reason: Surrendered license voluntarily.

License Number: 1850
Name: McCann Shipping Co.,
Address: 2608 Ptarmigan Dr., Walnut Creek, CA 94595
Date Revoked: January 5, 1995
Reason: Surrendered license voluntarily.

License Number: 495
Name: Gerard William Harder dba G.W. Harder Company
Address: 7 Dey Street, New York, NY 10007
Date Revoked: January 8, 1995
Reason: Failed to furnish a valid surety bond.

License Number: 2910
Name: I.M.L. International Freight Forwarding, Co.
Address: 3595 N.W. 154th Terr., Miami, FL 33054
Date Revoked: January 11, 1995
Reason: Failed to furnish a valid surety bond.

License Number: 2437
Name: Harris Brown, Inc.
Address: 968 Postal Rd., Ste. 315, Allentown, PA 18103
Date Revoked: January 14, 1995
Reason: Failed to furnish a valid surety bond.

Bryant L. VanBrakle,

Director, Bureau of Tariffs, Certification and Licensing.

[FR Doc. 95–2510 Filed 2–1–95; 8:45 am]

BILLING CODE 6730–01–M

Ocean Freight Forwarder License Applicants

Notice is hereby given that the following applicants have filed with the Federal Maritime Commission applications for licenses as ocean freight forwarders pursuant to section 19 of the Shipping Act of 1984 (46 U.S.C. app. 1718 and 46 CFR Part 510).

Persons knowing of any reason why any of the following applicants should not receive a license are requested to contract the Office of Freight Forwarders, Federal Maritime Commission, D.C. 20573.

Synergy Logistics Services, 3912 Brayton Ave Long Beach, CA 90807, Thomas David Daniels, Sole Proprietor

Ford Freight Forwarders, Inc., 12861 S.W. 147th Terrace Rd., Miami, FL 33186, Officer: Santiago Lostorto, President

Freight Service Network Inc., 914 Sivert Drive, Wood Dale, IL 60191, Officers: Sadru Rasool, President, Grace Kung, Treasurer

Dated: January 27, 1995.

By the Federal Maritime Commission.

Joseph C. Polking,

Secretary.

[FR Doc. 95-2511 Filed 2-1-95; 8:45 am]

BILLING CODE 6730–01–M

FEDERAL RESERVE SYSTEM

John P.M. Higgins, et al.; Change in Bank Control Notice

Acquisition of Shares of Banks or Bank Holding Companies

The notificant listed below has applied under the Change in Bank Control Act (12 U.S.C. 1817(j)) and § 225.41 of the Board's Regulation Y (12 CFR 225.41) to acquire a bank or bank holding company. The factors that are considered in acting on notices are set forth in paragraph 7 of the Act (12 U.S.C. 1817(j)(7)).

The notice is available for immediate inspection at the Federal Reserve Bank indicated. Once the notice has been accepted for processing, it will also be available for inspection at the offices of the Board of Governors. Interested persons may express their views in writing to the Reserve Bank indicated for the notice or to the offices of the Board of Governors. Comments must be received not later than February 16, 1995.

A. Federal Reserve Bank of Boston (Robert M. Brady, Vice President) 600 Atlantic Avenue, Boston, Massachusetts 02106:

1. John P.M. Higgins, Portland, Maine; to acquire 19.5 percent, for a total of 19.5 percent; Nicholas H.S. Higgins, Portland, Maine; to acquire 23.7 percent, for a total of 23.7 percent; and Robert C.S. Monks, Cape Elizabeth, Maine; to acquire 17.4 percent, for a total of 17.4 percent, of the Class E voting shares of Atlantic Bancorp, South Portland, Maine, and thereby indirectly acquire Atlantic Bank, N.A., South Portland, Maine.

Board of Governors of the Federal Reserve System, January 27, 1995.

Jennifer J. Johnson,

Deputy Secretary of the Board.

[FR Doc. 95–2543 Filed 2–1–95; 8:45 am]

BILLING CODE 6210–01–F

FEDERAL TRADE COMMISSION

[Dkt. C–3548]

Creative Aerosol Corp.; Prohibited Trade Practices, and Affirmative Corrective Actions

AGENCY: Federal Trade Commission.

ACTION: Consent order.

SUMMARY: In settlement of alleged violations of Federal law prohibiting unfair acts and practices and unfair methods of competition, this consent order prohibits, among other things, a New Jersey manufacturer of children's bath soap from representing that certain products or packaging will not harm the environment or atmosphere, or that any product or package offers any environmental benefit, unless it possess competent and reliable evidence that substantiates the representation. The consent order also prohibits the respondent from misrepresenting the extent to which any product or packaging is capable of being recycled, or the availability of recycling collection programs.

DATES: Complaint and Order issued January 13, 1995.[1]

FOR FURTHER INFORMATION CONTACT: Michael Dershowitz/FTC/S–4002, Washington, D.C. 20580, (202) 326–3158.

SUPPLEMENTARY INFORMATION: On Monday, October 31, 1994, there was published in the **Federal Register**, 59 FR 54456, a proposed consent agreement with analysis In the Matter of Creative Aerosol Corp., for the purpose of soliciting public comment. Interested parties were given sixty (60) days in which to submit comments, suggestions or objections regarding the proposed form of the order.

No comments having been received, the Commission has ordered the issuance of the complaint in the form contemplated by the agreement, made its jurisdictional findings and entered an order to cease and desist, as set forth in the proposed consent agreement, in disposition of this proceeding.

Sec. 6, 38 Stat. 721; 15 U.S.C. 46. Interprets or applies sec. 5, 38 Stat. 719, as amended; 15 U.S.C. 45.

Donald S. Clark,

Secretary.

[FR Doc. 95–2621 Filed 2–1–95; 8:45 am]

BILLING CODE 6750–01–M

[1] Copies of the Complaint and the Decision and Order are available from the Commission's Public Reference Branch, H–130, 6th Street & Pennsylvania Avenue, N.W., Washington, D.C. 20580.

[Dkt. C–3549]

RN Nutrition, et al.; Prohibited Trade Practices, and Affirmative Corrective Actions

AGENCY: Federal Trade Commission.

ACTION: Consent order.

SUMMARY: In settlement of alleged violations of Federal law prohibiting unfair acts and practices and unfair methods of competition, this consent order prohibits, among other things, the California marketers of the calcium supplement product, BoneRestore, from making unsubstantiated claims that any food, drug, or food or dietary supplement products will treat or cure any disease or condition; prohibits the respondents from using the name BoneRestore in a misleading way; and restricts the use of testimonial endorsements that do not represent typical results.

DATES: Complaint and Order issued January 13, 1995.[1]

FOR FURTHER INFORMATION CONTACT:

Phoebe Morse, Boston Regional Office, Federal Trade Commission, 101 Merrimac St., Suite 810, Boston, MA 02114–4719, (617) 424–5960.

SUPPLEMENTARY INFORMATION: On Monday, Sept. 12, 1994, there was published in the **Federal Register**, 59 FR 46853, a proposed consent agreement with analysis In the Matter of RN Nutrition, et al., for the purpose of soliciting public comment. Interested parties were given sixty (60) days in which to submit comments, suggestions or objections regarding the proposed form of the order.

A comment was filed and considered by the Commission. The Commission has ordered the issuance of the complaint in the form contemplated by the agreement, made its jurisdictional findings and entered an order to cease and desist, as set forth in the proposed consent agreement, in disposition of this proceeding.

Sec. 6, 38 Stat. 721; 15 U.S.C. 46. Interprets or applies sec. 5, 38 Stat. 719, as amended; 15 U.S.C. 45, 52.

Donald S. Clark,

Secretary.

[FR Doc. 95–2622 Filed 2–1–95; 8:45 am]

BILLING CODE 6750–01–M

[1] Copies of the Complaint and the Decision and Order are available from the Commission's Public Reference Branch, H–130, 6th Street & Pennsylvania Avenue, N.W., Washington, D.C. 20580.

DEPARTMENT OF HEALTH AND HUMAN SERVICES

Administration for Children and Families

Developmental Disabilities: List of Recipients, Project Descriptions, and Funding Levels for Grants and Contracts Awarded Under Fiscal Year 1994 Projects of National Significance

AGENCY: Administration on Developmental Disabilities (ADD), Administration for Children and Families (ACF), HHS.

ACTION: Notice.

FOR FURTHER INFORMATION CONTACT: Adele Gorelick, Program Development Division, Administration on Developmental Disabilities, 202/690–5982.

Description of Projects of National Significance

Under Part E of the Developmental Disabilities Assistance and Bill of Rights Act, as amended by Public Law 103–230 in 1994, grants and contracts are awarded for Projects of National Significance that support the development of national and State policy to enhance the independence, productivity, and integration and inclusion of individuals with developmental disabilities through:

- Data collection and analysis;
- Technical assistance to enhance the quality of State developmental disabilities councils, protection and advocacy systems, and university affiliated programs; and
- Other projects of sufficient size and scope that hold promise to expand or improve opportunities for people with developmental disabilities, including:

—Technical assistance for the development of information and referral systems;
—Educating policy makers;
—Federal interagency initiatives;
—The enhancement of participation of racial and ethnic groups in public and private sector initiatives in developmental disabilities;
—Transition of youth with developmental disabilities from school to adult life; and
—Special pilots and evaluation studies to explore the expansion of programs under part B (State developmental disabilities councils) to individuals with severe disabilities other than developmental disabilities.

In accordance with Section 162(f) of the Developmental Disabilities Assistance and Bill of Rights Act, as amended by Public Law 103–230 in 1994, the Administration on Developmental Disabilities, which administers the Projects of National Significance program, provides the following list of recipients of grants and contracts in each of the areas authorized in subsections (a) and (b):

Grants

- University of New Hampshire, Institute on Disability, Durham, NH—''National Home of Your Own Technical Assistance Center,'' a Five-Year Technical Assistance Center to facilitate broad-based systems change at State and national levels, create partnerships between agencies concerned with housing, and increase person-owned/controlled housing for persons with disabilities [a co-operative agreement]—$500,000.
- United Cerebral Palsy, Inc., Community Services Division, Washington, DC—''Project PAS-Port for Change,'' a Project of National Significance supporting and training coalition members to analyze Personal Assistance Services (PAS) availability and financing in each state and to propose systemic change—$99,897.
- Connecticut Union of Disability Action Groups, Inc., Wethersfield, CT—''Personal Assistance Services Through Leadership and Self Advocacy,'' a Project of National Significance providing leadership training so that people with developmental disabilities can have freedom and control of their own lives in their homes and communities—$100,000.
- Coalition for Independence, Kansas City, MO—''Each One, Teach One: Providing PAS through Teaching Persons with Disabilities Self-Advocacy and Leadership Skills,'' a Project of National Significance setting up a self-advocacy model where consumers will be trained to manage, pay, monitor, and, if necessary, fire their own providers, as well as train other PAS consumers in self-advocacy and leadership skills—$100,000.
- Children's Hospital CA–UAP, Department of Pediatrics, Los Angeles, CA—''CAS PAS Project: Advancing Personal Assistance Services through Consumer Leadership & Advocacy,'' a Project of National Significance implementing a 5-year PAS plan for California, developing a statewide cross-disability database, and conducting PAS training conferences to teach consumers skills in community leadership, outreach, and education—$100,000.
- New York State Developmental Disabilities Planning Council, Albany, NY—''Personal Assistance Services through Leadership and Self Advocacy,'' a Project of National

Significance encouraging individuals with disabilities and family members to serve as leaders and advocates and training them on a State and regional basis in the skills and techniques for systems impact—$100,000.

• University of Minnesota, Minneapolis, MN—''The National Residential Information Systems: Ongoing Data Collection and Information Dissemination on Residential Services for Persons with Developmental Disabilities,'' a Project of National Significance that continues to maintain annual statistics on State and nonstate residential services, conduct state policy and program surveys on key topics in residential and other community services, and conduct secondary analyses of other important national data bases and research projects, thereby providing a centralized source of information for integrating persons with DD into community settings—$200,000.

• University of Illinois at Chicago, UAP, Chicago, IL—''5th National Study of Public MR/DD Spending,'' a Project of National Significance that extends all revenue, expenditure, and program data elements to complete a 19-year record of evolving MR/DD services through development of comprehensive resource allocation profiles for each State and the U.S.—$200,000.

• Children's Hospital, Boston, MA—''Ongoing National Data Collection on Day and Employment Services for People with Developmental Disabilities,'' a Project of National Significance collecting and analyzing national data documenting service utilization and trends for individuals with mental retardation and other developmental disabilities—$200,000.

• Maryland Developmental Disabilities Council, Baltimore, MD—''Expanding the Targeted Constituency of the MD DDC: A Feasibility Study,'' a Project of National Significance examining the fiscal, programmatic, and other implications of expanding the Maryland DDC to include other individuals who might benefit from the Councils' programs—$150,000.

• Texas Rehabilitation Commission, Austin, TX—''Expanding the Scope of Developmental Disabilities Councils: Implications for Texas,'' a Project of National Significance studying the feasibility and implications of expanding the scope of DDCs system change, capacity building, advocacy, and other activities mandated under ADD law—$134,452.

• University of Puerto Rico Medical Sciences, Graduate School, San Juan, Puerto Rico—''Self-Advocacy and Empowerment of Individuals in Puerto Rico Culture,'' a Project of National Significance expanding the services of the Puerto Rico University Affiliated Program (UAP) to develop strategies to enhance the leadership effectiveness and advocacy skills of young adults with developmental disabilities and their families, thereby enabling young adults to impact the service delivery system serving as advocates on critical issues—$100,000.

• People First of Tennessee, Inc., Nashville, TN—''The Lift Every Voice Leadership Project,'' a Project of National Significance providing consumers with the tools to meaningfully affect policy within institutions/service providers, and laws, utilizing training, materials, and supports to develop a model for how others with disabilities can impact service delivery, effect the policymaking process through advocacy, and bring ideas to the community through events and media—$74,688.

• University of Wisconsin-Madison, Madison, WI—''Family and Youth Leadership Development to Promote Full Inclusion,'' a Project of National Significance building on the knowledge and capabilities of parents of youth from African American and Hispanic/Latino backgrounds and developing models for parent and youth leadership development—$100,000.

• University of Georgia, University Affiliated Program, Athens, GA—''Georgia Leadership Training for Youth of Color with Disabilities Project,'' a Project of National Significance including 10 individuals with disabilities and 10 without disabilities participating in training designed to help individuals understand each other's problems and develop their mutual interest in building better communities—$100,000.

• Temple University, Philadelphia, PA—Project convening a national working meeting to arrive at a consensus about steps needed to ensure that people with developmental disabilities are afforded their due process rights as a victim of crime or as an alleged offender and producing a report of findings, action steps, and recommendations—$50,000.

• Rose Kennedy Center, Albert Einstein College of Medicine, Bronx, NY—''Systems Change to Promote Collaborative Home-Based Services for Infants and Toddlers with or at Risk of Developmental Disabilities,'' a Projects of National Significance supplement to the University Affiliated Program core grant initiating two interagency efforts to promote home-based service development: (1) building and expanding collaborative efforts with the Visiting Nurse Service (VNS) and (2) using the knowledge and experience gained from the VNS collaboration to enable the UAP to collaborate with at least one local Head Start agency to plan an outreach program to initiate home-based services—$50,000.

• University of Missouri, Kansas City, MO—''Leadership and Choices,'' promoting leadership, choices, advocacy skills, and involvement of consumers and family members with the American Association of University Affiliated Programs, the University Affiliated Programs network, and in their communities; and providing a mechanism for developing long-term plans and a structure for carrying out consumer council goals—$3,488.

• University of Colorado, University Affiliated Program, Denver, CO—Project convening a conference on the state of knowledge regarding the use of facilitated communication and providing a forum for researchers to present their investigations—$15,000.

Contracts

• AlphaTech Corporation, Arlington, VA—a Management Information Systems (MIS) project to support the uniform automated collection, analysis, and reporting of grantee information on ADD's DD State Councils, P&As, UAPs, and PNS programs and plans and to facilitate decision making at the grantee, regional, and central office levels—$108,145.

• DAE Corporation, Chevy Chase, MD—PNS Annual Panel Review—$149,307.

• National Association of Protection and Advocacy Systems, Inc., Washington, DC—Technical Assistance—$120,000.

• American Association of University Affiliated Programs, Silver Spring, MD—Technical Assistance—$166,117.

• KRA Corporation, Silver Spring, MD—Support for Topical Meetings—$173,563.

• Advanced Resource Technologies, Inc., Alexandria, VA—Part A, Study of Developmental Disabilities Councils Expansion—$142,535.

• National Association of Developmental Disabilities Councils (NADDC), Washington, DC—Technical Assistance to DDCs—$120,000.

• KRA Corporation, Silver Spring, MD—Study of ADD Grants Formula—$28,208.

Interagency Agreements

• President's Committee on Mental Retardation, Department of Health and Human Services—$35,000.

• Administration on Native Americans, Department of Health and

Human Services—a project with the Navaho Consortium to develop a Native American Protection & Advocacy System—$30,000.

• Administration on Native Americans, Administration on Children, Youth and Families, the Indian Health Service, and the Public Health Service—a study of Fetal Alcohol Syndrome—$50,000.

• Assistant Secretary for Planning and Evaluation, Department of Health and Human Services—a study of Disabilities with the National Center for Health Statistics—$50,000.

Other Funding

• National Center on Child Abuse and Neglect (NCCAN)—Conference—$6,000.

• Americorps National Service Program, providing educational opportunities for Americans with and without disabilities to increase the independence, productivity, and community integration of people with disabilities, including personal assistance services and help for communities to realize the goals of accessibility, employment, and inclusion of the Americans with Disabilities Act—$166,743.

• Projects of National Significance Recission for funding for national disasters—$60,858.

Total FY 94 PNS Appropriation: $3,784,000

Total Amount Funded: $3,784,000

Dated: January 17, 1994.

Reginald Wells,

Deputy Commissioner, Administration on Developmental Disabilities.

[FR Doc. 95–2531 Filed 2–1–95; 8:45 am]

BILLING CODE 4184–01–P

Agency for Health Care Policy and Research

Notice of Meetings

In accordance with section 10(a) of the Federal Advisory Committee Act (5 U.S.C., Appendix 2) announcement is made of the following advisory committees scheduled to meet during the months of February and March 1995:

Name: Health Services Developmental Grants Review Subcommittee.

Date and Time: February 1–2, 1995, 8:00 a.m.

Place: Holiday Inn Crowne Plaza, 1750 Rockville Pike, Halpine Room, Rockville, Maryland 20852. Open February 1, 8:00 a.m. to 9:00 a.m. Closed for remainder of meeting.

Purpose: The Subcommittee is charged with the initial review of grant applications proposing experimental, analytical and theoretical research on costs, quality, access, effectiveness, and efficiency of the delivery of health services for the research grant program administered by the Agency for Health Care Policy and Research (AHCPR).

Agenda: The open session of the meeting on February 1 from 8:00 a.m. to 9:00 a.m. will be devoted to a business meeting covering administrative matters and reports. During the closed sessions, the Subcommittee will be reviewing developmental research and demonstration grant applications relating to the delivery, organization, and financing of health services. In accordance with the Federal Advisory Committee Act, section 10(d) of 5 U.S.C., Appendix 2 and 5 U.S.C., 552b(c)(6), the Administrator, AHCPR, has made a formal determination that these latter sessions will be closed because the discussions are likely to reveal personal information concerning individuals associated with the applications. This information is exempt from mandatory disclosure.

Anyone wishing to obtain a roster of members, minutes of the meeting, or other relevant information should contact Elizabeth A. Breckinridge, M.S., Scientific Review Administrator, Scientific Review Branch, Agency for Health Care Policy and Research, Suite 602, Executive Office Center, 2101 East Jefferson Street, Rockville, Maryland 20852, Telephone (301) 594–1452.

Name: Health Care Technology Study Section.

Date and Time: February 8–9, 1995, 8:00 a.m.

Place: Holiday Inn Crowne Plaza, 1750 Rockville Pike, Halpine Room, Rockville, Maryland 20852. Open February 8, 8:00 a.m. to 9:00 a.m. Closed for remainder of meeting.

Purpose: The Study Section is charged with conducting the initial review of health services research grant applications concerned with medical decisionmaking, computers in health care delivery, and the utilization and effects of health care technologies and procedures.

Agenda: The open session on February 8 from 8:00 a.m. to 9:00 a.m. will be devoted to a business meeting covering administrative matters and reports. The closed sessions of the meeting will be devoted to a review of health services research grant applications relating to the delivery, organization, and financing of health services. In accordance with the Federal Advisory Committee Act, section 10(d) of 5 U.S.C., Appendix 2 and 5 U S.C., 552b(c)(6), the Administrator, AHCPR, has made a formal determination that these latter sessions will be closed because the discussions are likely to reveal personal information concerning individuals associated with the applications. This information is exempt from mandatory disclosure.

Anyone wishing to obtain a roster of members, minutes of the meeting, or other relevant information should contact Karen Rudzinski, Ph.D., Scientific Review Administrator, Scientific Review Branch, Agency for Health Care Policy and Research, Suite 602, Executive Office Center, 2101 East Jefferson Street, Rockville, Maryland 20852, Telephone (301) 594–1437.

Name: Health Services Research Review Subcommittee.

Date and Time: February 15–17, 1995, 1:00 p.m.

Place: Embassy Suites Hotel, 4300 Military Road, N.W., Tenley Town I, Washington, D.C. 20015. Open February 15, 1:00 p.m. to 1:45 p.m. Closed for remainder of meeting.

Purpose: The Subcommittee is charged with the initial review of grant applications proposing analytical and theoretical research on costs, quality, access, and efficiency of the delivery of health services for the research grant program administered by the Agency for Health Care Policy and Research (AHCPR).

Agenda: The open session of the meeting on February 15 from 1:00 p.m. to 1:45 p.m. will be devoted to a business meeting covering administrative matters and reports. During the closed sessions, the Subcommittee will be reviewing analytical and theoretical research grant applications relating to the delivery, organization, and financing of health services. In accordance with the Federal Advisory Committee Act, section 10(d) of 5 U.S.C., Appendix 2 and 5 U.S.C., 552b(c)(6), the Administrator, AHCPR, has made a formal determination that these latter sessions will be closed because the discussions are likely to reveal personal information concerning individuals associated with the applications. This information is exempt from mandatory disclosure.

Anyone wishing to obtain a roster of members, minutes of the meeting, or other relevant information should contact Patricia G. Thompson, Ph.D., Scientific Review Administrator, Scientific Review Branch, Agency for Health Care Policy and Research, Suite 602, Executive Office Center, 2101 East Jefferson Street, Rockville, Maryland 20852, Telephone (301) 594–1451.

Name: Health Services Research Dissemination Study Section.

Date and Time: March 2–3, 1995, 8:00 a.m.

Place: Holiday Inn Crowne Plaza, Rockville Pike, Conference Room (TBA), Rockville, Maryland 20852. Open March 2, 8:00 a.m. to 8:30 a.m. Closed for remainder of meeting.

Purpose: The Study Section is charged with the review of and making recommendations on grant applications for Federal support of conferences, workshops, meetings, or projects related to dissemination and utilization of research findings, and AHCPR liaison with health care policy makers, providers, and consumers.

Agenda: The open session of the meeting on March 2 from 8:00 a.m. to 8:30 a.m. will be devoted to general business matters. During the closed portions of the meeting, the Study Section will be reviewing grant applications relating to the dissemination of research on the organization, costs, and efficiency of health care. In accordance with the Federal Advisory Committee Act, section 10(d) of 5 U.S.C., Appendix 2 and 5 U.S.C., 552b(c)(6), the Administrator, AHCPR, has made a formal determination that these latter sessions will be closed because the discussions are likely to reveal personal information concerning individuals associated with the grant applications. This information is exempt from mandatory disclosure.

Anyone wishing to obtain a roster of members, minutes of the meeting, or other relevant information should contact Linda

Blankenbaker, Scientific Review Administrator, Scientific Review Branch, Agency for Health Care Policy and Research, Suite 602, 2101 East Jefferson Street, Rockville, Maryland 20852, Telephone (301) 594–1438.

Agenda items for all meetings are subject to change as priorities dictate.

Dated: January 30, 1995.

Clifton R. Gaus,

Administrator.

[FR Doc. 95–2690 Filed 1–31–95; 10:57 am]

BILLING CODE 4160–90–P

Food and Drug Administration

Advisory Committee; Notice of Meeting

AGENCY: Food and Drug Administration, HHS.

ACTION: Notice.

SUMMARY: This notice announces a forthcoming meeting of a public advisory committee of the Food and Drug Administration (FDA). This notice also summarizes the procedures for the meeting and methods by which interested persons may participate in open public hearings before FDA's advisory committees.

FDA has established an Advisory Committee Information Hotline (the hotline) using a voice-mail telephone system. The hotline provides the public with access to the most current information on FDA advisory committee meetings. The advisory committee hotline, which will disseminate current information and information updates, can be accessed by dialing 1–800–741–8138 or 301–443–0572. Each advisory committee is assigned a 5-digit number. This 5-digit number will appear in each individual notice of meeting. The hotline will enable the public to obtain information about a particular advisory committee by using the committee's 5-digit number. Information in the hotline is preliminary and may change before a meeting is actually held. The hotline will be updated when such changes are made.

MEETING: The following advisory committee meeting is announced:

Food Advisory Committee

Date, time, and place. February 22, 1995, 9:30 a.m., Food and Drug Administration, Center for Food Safety and Applied Nutrition, Federal Bldg. 8, rm. 6823, 200 C St. SW., Washington, DC.

Type of meeting and contact person. A meeting of a task group on *Vibrio vulnificus* of the Food Advisory Committee with invited guests from the National Advisory Committee on Microbiological Criteria for Foods will be held by a telephone conference call. A speaker telephone will be provided in the conference room to allow public participation in the meeting. Open task group discussion, 9:30 a.m. to 12 m.; open public hearing, 12 m. to 1 p.m., unless public participation does not last that long; Lynn A. Larsen, Center for Food Safety and Applied Nutrition (HFS–5), Food and Drug Administration, 200 C St. SW., Washington, DC 20204, 202–205–4727, or FDA Advisory Committee Information Hotline, 1–800–741–8138 (301–443–0572 in the Washington, DC area), Food Advisory Committee, code 10564.

General function of the committee. The committee provides advice on emerging food safety, food science, and nutrition issues that FDA considers of primary importance in the next decade.

Open committee discussion. The task group will discuss the objective, the target audience, the implementation strategy and measurement of effectiveness for a *Vibrio vulnificus* consumer education initiative being planned by FDA. The initiative is expected to be funded by money from the National Marine Fisheries Service via an interagency agreement with FDA.

Agenda—Open public hearing. Interested persons may present data, information or views, orally or in writing, on issues pending before the task group. Those desiring to make formal presentations should notify the contact person before February 17, 1995, and submit a brief statement of the general nature of the evidence or arguments they wish to present, the names and addresses of proposed participants, and an indication of the approximate time required to make their comments. Written statements may be submitted to the task group or committee at any time through the contact person.

FDA public advisory committee meetings may have as many as four separable portions: (1) An open public hearing, (2) an open committee discussion, (3) a closed presentation of data, and (4) a closed committee deliberation. Every advisory committee meeting shall have an open public hearing portion. Whether or not it also includes any of the other three portions will depend upon the specific meeting involved. There are no closed portions for the meetings announced in this notice. The dates and times reserved for the open portions of each committee meeting are listed above.

The open public hearing portion of each meeting shall be at least 1 hour long unless public participation does not last that long. It is emphasized, however, that the 1 hour time limit for an open public hearing represents a minimum rather than a maximum time for public participation, and an open public hearing may last for whatever longer period the committee chairperson determines will facilitate the committee's work.

Public hearings are subject to FDA's guideline (subpart C of 21 CFR part 10) concerning the policy and procedures for electronic media coverage of FDA's public administrative proceedings, including hearings before public advisory committees under 21 CFR part 14. Under 21 CFR 10.205, representatives of the electronic media may be permitted, subject to certain limitations, to videotape, film, or otherwise record FDA's public administrative proceedings, including presentations by participants.

Meetings of advisory committees shall be conducted, insofar as is practical, in accordance with the agenda published in this **Federal Register** notice. Changes in the agenda will be announced at the beginning of the open portion of a meeting.

Any interested person who wishes to be assured of the right to make an oral presentation at the open public hearing portion of a meeting shall inform the contact person listed above, either orally or in writing, prior to the meeting. Any person attending the hearing who does not in advance of the meeting request an opportunity to speak will be allowed to make an oral presentation at the hearing's conclusion, if time permits, at the chairperson's discretion.

The agenda, the questions to be addressed by the committee, and a current list of committee members will be available at the meeting location on the day of the meeting.

Transcripts of the open portion of the meeting may be requested in writing from the Freedom of Information Office (HFI–35), Food and Drug Administration, rm. 12A–16, 5600 Fishers Lane, Rockville, MD 20857, approximately 15 working days after the meeting, at a cost of 10 cents per page. The transcript may be viewed at the Dockets Management Branch (HFA–305), Food and Drug Administration, rm. 1–23, 12420 Parklawn Dr., Rockville, MD 20857, approximately 15 working days after the meeting, between the hours of 9 a.m. and 4 p.m., Monday through Friday. Summary minutes of the open portion of the meeting may be requested in writing from the Freedom of Information Office (address above) beginning approximately 90 days after the meeting.

This notice is issued under section 10(a)(1) and (2) of the Federal Advisory

Committee Act (5 U.S.C. app. 2), and FDA's regulations (21 CFR part 14) on advisory committees.

Dated: January 27, 1995.

David A. Kessler,

Commissioner of Food and Drugs.

[FR Doc. 95–2504 Filed 2–1–95; 8:45 am]

BILLING CODE 4160–01–F

Health Care Financing Administration

[BPD–812–NC]

RIN 0938–AG83

Medicare Program; Criteria for Medicare Coverage of Lung Transplants

AGENCY: Health Care Financing Administration (HCFA), HHS.

ACTION: Notice with comment period.

SUMMARY: This notice announces a Medicare national coverage decision for lung and heart-lung transplantations. Lung transplantation refers to the transplantation of one or both lungs from a single cadaver donor. Heart-lung transplantation refers to the transplantation of one or both lungs and the heart from a single cadaver donor.

We have determined that, under certain circumstances, lung transplants and heart-lung transplants are a medically reasonable and necessary service when furnished to patients with progressive end-stage pulmonary or cardiopulmonary disease and when furnished by Medicare participating facilities that meet specific criteria, including patient selection criteria.

DATES: This notice is effective February 2, 1995. For information on how this notice effects Medicare payment for lung and heart-lung transplants, see sections E and F of this notice.

ADDRESSES: *Applications.* A facility seeking Medicare coverage and payment for lung transplantation should mail 10 copies of the application to the address below in a manner which provides the facility with documentation that it was received by us: Director, Office of Hospital Policy, Room 189 East High Rise, 6325 Security Boulevard, Baltimore, Maryland 21207.

Comments. Comments will be considered if we received them at the appropriate address, as provided below, no later than 5 p.m. on April 3, 1995.

Mail written comments (1 original and 3 copies) to the following address: Health Care Financing Administration, Department of Health and Human Services, Attention: BPD–812–NC, P.O. Box 26676, Baltimore, MD 21207.

If you prefer, you may deliver your written comments (1 original and 3 copies) to one of the following addresses:

Room 309–G, Hubert H. Humphrey Building, 200 Independence Avenue, SW., Washington, DC 20201, or

Room 132, East High Rise Building, 6325 Security Building, Baltimore, MD 21207.

Because of staffing and resource limitations, we cannot accept comments by facsimile (FAX) transmission. In commenting, please refer to file code BPD–812–NC. Comments received timely will be available for public inspection as they are received, generally beginning approximately 3 weeks after publication of a document, in Room 309–G of the Department's offices at 200 Independence Avenue, SW., Washington, DC, on Monday through Friday of each week from 8:30 a.m. to 5 p.m. (phone: (202) 690–7890).

If you wish to submit comments on the information collection requirements contained in this rule, you may submit comments to: Office of Information and Regulatory Affairs, Office of Management and Budget, Room 3001, New Executive Office Building, Washington, DC 20503, Attn: Allison Herron Eydt, HCFA Desk Officer.

FOR FURTHER INFORMATION CONTACT: Claude Mone, (410) 966–5666.

SUPPLEMENTARY INFORMATION:

I. Background

Administration of the Medicare program is governed by the Medicare law, title XVIII of the Social Security Act (the Act). The Medicare law provides coverage for broad categories of benefits, including inpatient and outpatient hospital care, skilled nursing facility (SNF) care, home health care, and physicians' services. It places general and categorical limitations on the coverage of the services furnished by certain health care practitioners, such as dentist, chiropractors and podiatrists, and it specifically excludes some categories of services from coverage, such as cosmetic surgery, personal comfort items, custodial care, routine physical checkups, and procedures that are not reasonable and necessary for diagnosis or treatment of an illness or injury.

The Act also provides direction as to the manner in which payment is made for Medicare services, the rules governing eligibility for services, and the health, safety, and quality standards to be met in institutions furnishing services to Medicare beneficiaries. The Medicare law does not, however, provide an all-inclusive list of specific items, services, treatments, procedures, or technologies covered by Medicare. Thus, except for the examples of durable medical equipment in section 1861(n) of the Act, and some of the medical and other health services listed in section 1861(s) and 1862(a) of the Act, the Act does not specify medical devices, surgical procedures, or diagnostic or therapeutic services that should be covered or excluded from coverage.

The intention of the Congress, at the time the Medicare Act was enacted in 1965, was that Medicare would provide health insurance to protect the elderly or disabled from the substantial costs of acute health care services, principally hospital care. The program was designed generally to cover services ordinarily furnished by hospitals, SNFs, and physicians licensed to practice medicine. The Congress understood that questions as to coverage of specific services would invariably arise and would require specific coverage decisions by those administering the program. It vested in the Secretary the authority to make those decisions.

Section 1862(a)(1)(A) of the Act prohibits payment for any expenses incurred for items or services ''which are not reasonable or necessary for the diagnosis or treatment of illness or injury or to improve the functioning of a malformed body member.'' We have interpreted this statutory provision to exclude from Medicare coverage those medical and health care services that have not been demonstrated by acceptable clinical evidence to be safe and effective. Effectiveness in this context is defined as the probability of benefit to individuals from a medical item, service, or procedure for a given medical problem under average conditions of use, that is, day-to-day medical practice.

To date, the Medicare program has not issued a national coverage policy on lung or heart-lung transplantation. In the absence of national coverage policy, the contractors that process Medicare claims are authorized to develop Medicare coverage policy for their service area using medical literature, the advice of medical consultants and local medical societies, and their private line business practices.

Several contractors have determined lung transplantation to be a Medicare covered service prior to this notice, and a small number of contractors have covered heart-lung transplant. However, most of these contractors do not have a clearly defined coverage policy that would allow a beneficiary to know in advance if the procedure would be covered. Rather, they review each case individually after it has occurred and determine coverage without published

criteria. Other Medicare contractors do not cover the procedure at all. Thus, there is inconsistency within the nation.

On January 30, 1989, we published a proposed rule in the **Federal Register**, at 54 FR 4302, which describes our process for formulating new national coverage decisions and reevaluating existing decisions. As discussed in that notice, we sometimes rely on the Office of Health Technology Assessment (OHTA) in the Agency for Health Care Policy and Research (AHCPR) of the Public Health Service (PHS) for medical consultation and advice. We also rely on other PHS components, such as the National Institutes of Health.

The AHCPR evaluates the risks, benefits, and clinical effectiveness of new, existing, or unestablished medical technologies. The assessment process includes a comprehensive review of the medical literature and emphasis broad participation from within and outside the Federal government. The OHTA conducted an assessment of lung transplantation in 1991 and concluded that experience has shown that lung transplants can provide adequate pulmonary function for extended periods in some patients with otherwise fatal lung disease. In addition, the National Heart, Lung, and Blood Institute (NHLBI) in the National Institutes of Health, Public Health Service, reported to us in 1993 that lung transplantation in carefully selected patients and by experienced teams yields significant increases in survival with reasonable quality of life.

We believe it is appropriate in the face of these findings to issue a national policy rather than to maintain the current system of inconsistency among the contractors. In addition, we believe it is more beneficial to develop a national policy where facilities and beneficiaries will know in advance the criteria and facilities covered rather than to maintain the system in many areas of making coverage decisions on a case by case basis without clearly defined criteria.

II. Provisions

We have carefully reviewed the reports and recommendations of the Office of Health Technology Assessment and the National Heart, Lung, and Blood Institute. Based on these reports, the opinions of our medical advisors, consultations with PHS, and review of the medical literature, consultation with medical advisors and reconsultation with NHLBI since the OHTA assessment, we are establishing national coverage of lung transplant under the Medicare program, under the authority of section 1862(a)(1)(A) of the Act.

Sections 1869(b)(3)(B) and 1871(a)(2) of the Act specifically exempt national coverage decisions from the notice-and-comment rulemaking process ordinarily required by section 553 of the Administrative Procedure Act. Despite this authority, we have indicated that we would use the prior comment process in discontinuing coverage of procedures. However, we do not believe that the establishment of this policy is a discontinuation of coverage. Rather, we view this policy as establishment of national coverage policy where no such policy previously existed. Consequently, we are proceeding with a final notice in this regard. Nonetheless, we wish to receive comments on these criteria within 60 days of the publication of this notice.

Medicare will cover lung transplants for beneficiaries with progressive end-stage pulmonary disease and when performed by facilities that (1) make an application to HCFA for approval as a lung transplant facility under the criteria established by this notice; (2) supply documentation showing their satisfaction of compliance with the criteria discussed later in this notice; and (3) are approved by HCFA under these criteria. Medicare will also cover lung transplantation for end-stage cardiopulmonary disease when it is expected that transplant of the lung will result in improved cardiac function.

In addition, Medicare will also cover heart-lung transplants for beneficiaries with progressive end-stage cardiopulmonary disease when they are provided in a facility that has been approved by Medicare for both heart and lung transplantation. The NHLBI's studies of this procedure have persuaded us that, though provided infrequently, this procedure is sometimes the appropriate intervention for specific patients. We believe the procedure may be safely and effectively done in a facility that is Medicare approved for both heart and lung transplantation. We are not establishing specific patient selection criteria for the procedure; however, we expect that facilities that perform heart-lung transplants will develop and use appropriate criteria.

Organs transplanted as a heart-lung procedure should be included in the volume and survival statistics for each organ. Thus, facilities may meet the volume and survival criteria delineated in this notice through both lung and heart-lung transplant procedures.

A. Specific Clinical Conditions Required for Lung Transplantation Coverage

Medicare will cover lung transplants only for those beneficiaries who are diagnosed as having progressive end-state pulmonary disease (or, in some instances, end-stage cardiopulmonary disease) and when the procedure is performed in a participating facility that meets specific criteria.

Note: See effective date section for further explanation.

We are requiring that facilities meet specific criteria in areas such as patient selection, patient management, commitment, plans, experience and survival rates, maintenance of data, organ procurement, laboratory services, and billing. Facilities must have patient selection criteria for determining suitable candidates for lung transplants.

B. Facility Requirements

Under current Medicare policies, a procedure can be considered medically reasonable and necessary only if its safety and efficacy have been demonstrated adequately by scientific evidence, such as controlled clinical studies, and it has been generally accepted by the medical community. Normally, surgical procedures and medical regimens, although requiring competent, skilled personnel, are of a nature that they can be performed successfully on most patients who require them in most facilities that meet the Medicare conditions of participation for hospitals in 42 CFR part 482. In the case of lung transplantation, however, we believe many other factors are related to the safety and efficacy of the procedure. Thus, coverage of lung transplants requires detailed criteria to identify the context in which lung transplantations can be considered medically reasonable and necessary.

We are covering only those lung transplantations performed in facilities that demonstrate good patient outcomes (for example, initially a 1-year survival rate of 69 percent for patients receiving a lung transplant) and compliance with the facility criteria. While we believe that survival rates are important measures of successful outcomes, we do not believe that they can serve as the only criteria a center has to meet in order to be approved for Medicare payment for lung transplants. Once a facility applies for approval under these criteria and is approved as a lung transplant facility for Medicare purposes, it is obliged to report immediately to HCFA any events or changes that would affect its approved status. Specifically, a facility is required to report, within a reasonable period of time, any significant decrease in its experience level or survival rates, the departure of key members of the transplant team or any other major

changes that could affect the performance of lung transplants at the facility. Changes from the terms of approval may lead to prospective withdrawal of approval for Medicare coverage of lung transplants performed at the facility.

A discussion of the criteria that we are requiring facilities to meet in order to receive Medicare payment for lung transplantation follows. A very similar approach is being used in determining eligibility of heart and liver transplant facilities and has proved very successful.

1. Patient Selection Criteria

The NHLBI of the National Institutes of Health, Public Health Service, has reported to us that lung transplantation in carefully selected patients and by experienced teams yields significant increases in survival with reasonable quality of life. Therefore, we believe that careful patient selection for lung transplants, as suggested by NHLBI, is essential to achieve optimal results. We require that facilities have written patient selection criteria that they follow in determining suitable candidates for lung transplants, such as the following:

a. A patient is selected based upon both a critical medical need for transplantation and a strong likelihood of successful clinical outcome.

b. A patient who is selected for a lung transplant has irreversible, progressively disabling, end-stage pulmonary disease (or, in some instances, end-stage cardiopulmonary disease).

c. The facility has tried or considered all other medically appropriate medical and surgical therapies that might be expected to yield both short- and long-term survival comparable to that of transplantation.

d. Plans for long-term adherence to a disciplined medical regimen are feasible and realistic for the individual patient.

Many factors must be recognized as exerting an adverse influence upon the patient's outcome after transplantation. The following adverse factors are among those that should be considered in selecting patients for transplantation:

- Primary or metastatic malignancies of the lung.
- Current significant acute illness that is likely to contribute to a poor outcome if the patient receives a lung transplant or current use of mechanical ventilation for more than a very brief period.
- Significant or advanced heart, liver, kidney, gastrointestinal or other systemic or multi-system disease that is likely to contribute to a poor outcome after lung transplantation.
- Significant extra-pulmonary infection.
- Chronic pulmonary infection in candidates for single lung transplantation.
- Continued cigarette smoking or failure to have abstained for long enough to indicate low likelihood of recidivism.
- Systemic hypertension that requires more than two drugs for adequate control.
- Cachexia, even in the absence of major end-organ failure.
- Obesity.
- Previous thoracic or cardiac surgery or other bases for pleural adhesions.
- Age beyond that at which there has been substantial favorable experience.
- Chronic corticoid therapy that cannot be tapered to a low dose (10 mg prednisone per day) or discontinued prior to transplantation.
- A history of behavior pattern or psychiatric illness considered likely to interfere significantly with a disciplined medical regimen.

Except for the matter of primary or metastatic malignancies of the lung, all these factors were explicitly enumerated in the National Heart, Lung, and Blood Institute memorandum upon which we primarily relied in developing this notice. Primary or metastatic malignancies of the lung are implicit in the National Heart, Lung, and Blood Institute's listing of systemic and multi-system diseases as an adverse factor. We are explicitly listing primary or metastatic malignancy of the lung to emphasize it should be an adverse factor in patient selection. We note that we have received a report which surveyed major lung transplant facilities regarding, among other things, appropriate patient selection criteria for lung transplants. The results of the survey indicate Medicare coverage criteria for lung transplantation should include patient selection criteria that exclude malignancies. The American College of Cardiology believes that malignancy (other than basal cell carcinoma) is an absolute contraindication for heart-lung transplant. (See Health Technology Assessment ''Institutional and Patient Criteria for Heart/Lung Transplantation,'' Agency for Health Care Policy and Research). In addition, a New England Journal of Medicine article by Steven E. Weinberger, M.D. (Volume 328, Number 20, May 20, 1993) indicated that lung transplant patients ''* * * should not have an underlying cancer or other systemic illness,'' and that same view was reflected in a survey of lung transplant programs.

These criteria take into consideration advances in the transplantation field and reflect discussions with experts in pulmonary medicine, infectious diseases, transplantation, surgery, biostatistics, and other experts. We realize that the indicators to measure the safety and efficacy of lung transplantations will continue to evolve. Thus, we may need to update the criteria periodically to recognize further developments in lung transplantation technology. We intend to re-evaluate the criteria through survey and data gathering within the next 3 years.

2. Patient Management

A facility must have adequate patient management plans and protocols that include the following:

- Therapeutic and evaluative procedures for the acute and long-term management of a patient, including commonly encountered complications. The facility must state the basis for confidence in these plans.
- Patient management and evaluation during the waiting and immediate post-discharge, as well as in-hospital, phases of the program.
- Long-term management and evaluation, including education of the patient, liaison with the patient's attending physician, and the maintenance of active patient records for a period of at least 5 years.

3. Commitment

A facility must make a sufficient commitment of resources and planning to the lung transplant program to carry through its application. Indications of this commitment should include a commitment by the facility to the lung transplant program at all levels and which is broadly evident throughout the facility. (A lung transplantation program requires a major commitment of resources, which may intermittently include many other departments as well as the principal sponsoring departments.)

The facility must have expertise in medical, surgical, and other relevant areas, particularly thoracic surgery, vascular surgery, anesthesiology, immunology, infectious diseases, pulmonary diseases, pathology, radiology, nursing, blood banking, and social services. The facility must identify individuals in these areas in order to achieve an identifiable and stable transplant team. Responsible medical/surgical members of the team must be board certified or eligible to take the boards in their respective disciplines or have, in the opinion of the non-Federal experts discussed in section II.D. of this notice, demonstrated

competence irrespective of board status. We believe board eligibility is required to assure high quality care.

The facility's commitment should also be evident by the following:

- The component teams must be integrated into a comprehensive team with clearly defined leadership and corresponding responsibility.
- The anesthesia service must identify a team for transplantation that must be available at all times.
- The infectious disease service must have both the professional skills and laboratory resources needed to discover, identify, and manage the complications from a whole range of organisms, may of which are uncommonly encountered.
- The nursing service must identify a team or teams trained not only in hemodynamic support of the patient, but also in the special problems of managing immunosuppressed patients.
- Pathology resources must be available for studying and reporting promptly the pathological responses to transplantation.
- Adequate social service resources must be available.
- Mechanisms must be in place for managing the lung transplant program that assure that patient selection criteria are consistent with those set forth in the facility's written patient selection criteria and that the facility is responsible for the ethical and medical considerations involved in the patient selection process and application of patient selection criteria.
- Adequate plans exist for organ procurement meeting legal and ethical criteria, as well as yielding viable transplantable organs in reasonable numbers.

4. Facility Plans

The facility must have overall facility plans, commitments, and resources for a program that will ensure a reasonable concentration of experience; specifically, 10 or more lung transplantation cases per year in patients who have end-state pulmonary or cardiopulmonary disease. The facility must show that this level of activity is feasible and likely to continue on the basis of plans, commitments, and resources.

5. Experience and Survival Rates

The facility must demonstrate experience and success with a clinical organ transplantation program involving immunosuppressive technique. The facility must have an established lung transplantation program with documented evidence of 10 or more patients, who have end-stage pulmonary or cardiopulmonary disease, in each of the two preceding 12-month periods. The facility can use single lung, double lung and heart-lung transplant patients in meeting this criterion. The Medicare cardiac and liver transplant criteria require a minimum volume of 12 transplants annually. However, based on the recommendation of the National Heart, Lung, and Blood Institute, we have established 10 cases per year as the basic standard for a lung transplant program.

We are establishing a minimum volume criterion because we believe a significant number of transplants is generally needed to maintain the entire transplant team commitment and skills to assure that procedures are of appropriate quality and safety. Our own research in heart transplantation has documented improved survival associated with Medicare approved facilities over those that do not meet the Medicare criteria, which includes minimum volume thresholds. In addition, Jeffrey Hosenpud, M.D. et al., reported in the Journal of the American Medical Association (volume 271, No. 23, June 15, 1994, page 1844) on the effect of transplant center volume on cardiac transplant outcome. These researchers found increased risk of mortality in centers performing fewer than 9 cardiac transplants per year. Further, research conducted by Erick B. Edward, *et al* and presented in the Fifteenth world Congress of the Transplantation Society demonstrated that, after correcting for patient mix covariates, patients mortality following liver transplantation in the United States is a function of center transplant volume. Such articles confirm our view that volume generally is a strong factor in predicting survival. Although we are not aware of published studies such as those with heart and liver transplants, empirically demonstrating that volume is associated with successful outcome and team proficiency in lung transplantion, we believe it is reasonable to assume a similar relationship would exist for lung transplants.

We have established the minimum volume of 10 transplants per year for lungs based on the fact that there are fewer lungs than hearts and livers available for transplanation. The NHLBI recommended 10 transplants as an appropriate number.

We have contacted a large sample of active lung transplant programs to gather data regarding the volume of transplants performed over the past three years. In arraying the results of these data, we found that the vast majority of centers that are designated as lung transplant centers perform a very small number of procedures. In fact, a significant number of these centers performed less than two transplants annually. Over 80 percent of the total transplants in the data were performed in those centers that exceeded the volume thereshold recommended by NHLBI. Thus, although a relatively small number of the total facilities designated to perform lung transplants by the organ Procurement and Transplanation Network are expected to qualify initially (approximately 15 of 77), we expect the facilities that are approved initially to perform over 80 percent of the lung transplants. Thus, we do not anticipate adverse impact on beneficiary access as a result of this criterion.

Based on the results of this analysis, we believe that 10 is a reasonable threshold for volume criteria. However, we welcome comments during the comment period as to the appropriateness of the number. Further, as we discuss later, exceptions to the facility criteria, including the number of persons who received transplants, may be warranted if there is justification. However, as a general matter, we believe less than 10 transplants a year is not sufficient to maintain the standard of performance needed for approval.

Survival rates may be influenced by many factors including random chance and patient selection. However, most authorities agree that a patient who is not free of adverse prognostic factors warrants lung transplantation only if he or she has a reasonable prognosis and the donor lung cannot be used in a patient who is a good candidate with at least a moderately urgent need and who is in reasonable geographic proximity. Based on data from the NHLBI report for the 996 patients receiving lung transplants in the United States prior to January 1, 1993, Kaplan-Meier actuarial survivals at 1, 2, and 3 years are 72 percent, 66 percent, and 63 percent, respectively. For patients receiving a single lung transplant (669 patients), and sequential bilateral transplantation of two lungs (161 patients), survival data are similar—73 percent, and 75 percent, respectively, at 1 year, and 67 percent and 71 percent at 2 years. With the two lungs transplanted while joined (''en bloc''), results seem less favorable, with 63 percent and 57 percent 1 and 2-year survivals. When all lung and heart-lung data are aggregated, the U.S. experience for 1,287 patients (1987 through 1992) is 69 percent, 62 percent and 59 percent actuarial survival at 1, 2, and 3 years, respectively.

Since we will be covering single, double and heart-lung transplants and collecting data for all these types of transplants in evaluating volume and survival statistics for applicant hospitals, we believe that we should use the NHLBI reported aggregate survival. That survival is 69 percent at 1 year and 62 percent at 2 years. These numbers reflect the same types of organ transplants (single lung, double lung and heart-lung) as are used by facilities in meeting volume criteria.

At the time of the application, the facility must demonstrate actuarial 1-year survival rates of 69 percent for patients who have end-stage pulmonary or cardiopulmonary disease and who have had lung or heart-lung transplants at that facility using the Kaplan-Meier technique described below and a 2-year survival rate of 62 percent. All patients transplanted after 1989 should be included in the calculation. We have chosen 1990 as the beginning date for the facility's survival rate experience because the procedure was infrequently performed before that date. We specifically invite comment on these percentages.

In reporting their actuarial survival rates, facilities must use the Kaplan-Meier technique and must report both 1-year and 2-year survival rates for all transplant cases occurring on or after January 1, 1990. Generally, we would expect applicants to have at least 3 years of lung transplant experience to be used in the data array and survival calculations. The following definitions and rules also must be used:

a. The date of transplantation (or, if more than one transplantation is performed, the date of the first transplantation) must be the starting date for calculation of the survival rate.

b. For those dead, the date of death if used, if known. If the date of death is unknown, it must be assumed as 1 day after the date of the last ascertained survival.

c. For those who have been ascertained as surviving within 60 days before the fiducial date (the point in time when the facility's survival rates are calculated and its experience is reported), survival is considered to be the date of the last ascertained survival, except for patients described in paragraph (e) below.

Note: The fiducial date cannot be in the future; it must be within 90 days before the date we receive the application.

d. Any patient who is not known to be dead but whose survival cannot be ascertained to a date that is within 60 days before the fiducial date, must be considered as ''lost to followup'' for the purposes of this analysis.

e. Any patient who receives a lung transplant between 61 and 120 days before the fiducial date must be considered as ''list to followup'' if he or she is not known to be dead and his or her survival has not been ascertained for at least 60 days before the fiducial date. Any patient transplanted within 60 days before the fiducial date must be considered as ''lost to followup'' if he or she is not known to be dead and his or her survival has not been ascertained on the fiducial date.

f. A facility must submit its survival analyses using the assumption that each patient in the ''lost to followup'' category died 1 day after the last date of ascertained survival. However, a facility may submit additional analyses that reflect each patient in the ''lost to followup'' category as alive at the date of the last ascertained survival.

g. Survival is calculated based on patient survival, not graft survival. Consequently, facilities should not consider retransplantation as termination.

h. In addition to reporting actuarial survival rates, the facility must submit the following actual information on every Medicare and non-Medicare patient who received a lung transplant between January 1, 1990 and the date of the application:

- Patient transplant number.
- Age.
- Sex.
- Clinical indication for transplant (diagnosis).
- Date of transplant.
- Date of most recent ascertained survival.
- Date of death.
- Category of patient (living, dead or ''lost to followup'').
- Survival after lung transplant in days.
- Type of lung transplant (for example, single, bilateral, double lung or heart-lung).
- Date of retransplant.
- Number of retransplants.

Unique patient identifiers are not needed for data prior to the application. The facility may submit additional information on any of the cases that it would like considered in the review.

Although we are not requiring that these data be submitted in a particular format, our review will be facilitated if the data are submitted as follows:

- Data are tabulated in twelve columns, with data for each patient appearing as one line and listed in the sequence of date of transplant.
- The fiducial date should appear on each page.
- The transplant numbers listed may be existing lung transplant numbers used by the applicant facility. If so, the basis for any missing numbers should be explained.
- The tabulation should include no more than these required data. If more data are provided, they should be provided through additional tables or supplemental explanation.

In addition to the data above on the individual patient, the facility must submit its retransplantation rate per year for the last 2 years for lung transplants.

6. Maintenance of Data

The facility must agree to maintain and, when requested, periodically submit data to HCFA, in standard format, about patients selected (including patient identifiers), protocols used, and short- and long-term outcome on all patients who undergo lung transplantation, not only those for whom payment under Medicare is sought. Such data are necessary to provide a data base for an ongoing assessment of lung transplantation and to ensure that approved facilities maintain appropriate patient selection criteria, adequate experience levels and satisfactory patient outcomes. In addition, facilities must agree to notify HCFA immediately of any change related to the facility's transplant program (including turnover of key staff members) that could affect the health or safety of patients selected for covered Medicare lung transplants or that would otherwise alter specific elements in their application. For example, a facility must report any significant decrease in its experience level or survival rates, the departure of key members of the transplant team, the transplantation of patients who do not meet the facility's patient selection criteria, or any other major changes that could affect the performance of lung transplants at the facility. Changes from the terms of approval may lead to withdrawal of approval for Medicare coverage of lung transplants performed at the facility.

Facilities not approved for Medicare covered lung transplants are not required to maintain data in standard format. However, if and when these facilities apply for Medicare approval, they will be required to submit such data for all patients receiving a lung transplant.

7. Organ Procurement

The facility must be a member of the Organ Procurement and Transplantation Network as a lung transplant center and abide by the Network's approved rules. The Organ Procurement and

Transplantation Network is currently administered under an HHS contract by the United Network for Organ Sharing. The facility must participate in an organ procurement program to obtain donor organs.

If a lung transplantation center is not a Medicare approved organ procurement organization, it must have a written arrangement with such an approved organization to share organs. The authority for this requirement is section 1138(a)(1) of the Act. The lung transplantation center must notify HCFA in writing within 30 days of terminating such arrangements.

An ''organ procurement organization'' is defined as an organization that meets the criteria in section 371(b) of the Public Health Service Act, 42 U.S.C. 273(b), and has been designated by HCFA as an organ procurement organization under section 1138(b) of the Act. Such an agency performs or coordinates all of the following services:

- Retrieval of donated lungs.
- Preservation of donated lungs.
- Transportation of donated lungs.
- Maintenance of a system to locate prospective recipients for retrieved organs.

8. Laboratory Services

The facility must make available, directly or under arrangements, laboratory services (including blood banking) to meet the needs of patients. Laboratory services are performed in a laboratory facility certified for those services under the Clinician Laboratories Improvement Amendments of 1988.

9. Billing

The facility must agree to submit claims to Medicare only for lung transplants performed on individuals who have been diagnosed as having end-stage pulmonary or cardiopulmonary disease.

10. Pediatric Hospitals

The Congress addressed the issue of Medicare coverage of pediatric heart transplants. It enacted section 4009(b) of the Omnibus Budget Reconciliation Act of 1987 (Pub. L. 100–203) which essentially deemed pediatric facilities to be certified as heart transplant facilities if they met certain specified conditions. We have adopted these same conditions that were specified for pediatric heart centers for use in pediatric liver transplantation, and we believe it is appropriate to do so likewise for pediatric lung transplantation.

There fore, lung transplantation will be covered for Medicare beneficiaries when performed in a pediatric hospital that performs pediatric lung transplants if the hospital submits an application that HCFA approves as documenting the following:

The hospital's pediatric lung transplant program is operated jointly by the hospital and another facility that has been found by HCFA to meet the institutional coverage criteria in this notice; the unified program shares the same transplant surgeons and quality assurance program (including oversight committee, patient protocol, and patient selection criteria); and the hospital is able to provide the specialized facilities, services, and personnel that are required by pediatric lung transplant patients.

C. Application Procedure

We will accept and begin to review applications after the publication date of this notice. The application procedure is as follows.

An original and 10 copies of the application must be submitted to HCFA on 8½ by 11 inch paper, signed by a person authorized to do so. The facility must be a participating hospital under Medicare and must specify its provider number, the name and title of its chief executive officer, and the name and telephone number of an individual we could contact should we have questions regarding the application.

Information and data must be clearly stated, well organized, and appropriately indexed to aid in review against the criteria specified in this notice. Each page must be numbered. To the extent possible, the application should be organized into nine sections corresponding to each of the nine major criteria and addressing, in order, each of the sub-criteria identified.

The application should be mailed to the address below in a manner which provides the facility with documentation that it was received by us: Director, Office of Hospital Policy, Room 189 East High Rise, 6325 Security Boulevard, Baltimore, Maryland 21207.

D. Process for Review and Approval of Facilities

We are requiring that facilities that wish to obtain lung transplantation coverage for their Medicare patients under this notice submit an application and supply documentation showing their compliance with the criteria at the time of application, and, in some instances, their ongoing compliance with the criteria. We will approve facilities based on a review of the materials submitted regarding their experience and expertise, as well as their commitment to the lung transplant program. We intend to conduct the review using the aid and advice of non-Federal expert consultants in relevant fields. Generally, the consultants will have the responsibility of reviewing applications at the request of HCFA, making recommendations to HCFA on a timely basis concerning qualified facilities, and supporting each recommendation with written documentation. Consensus of the consultants is not required. The individual consultants report to us on their findings with respect to individual applications. Based on these findings and our evaluations and review, HCFA makes decisions as to the approval or disapproval of such applications.

Based on our experience in using a similar approach to review applications from hospitals seeking approval as Medicare heart or liver transplant programs, we believe this method is the most effective way to determine promptly and efficiently whether applicants meet the lung transplant facility criteria. It permits relatively rapid implementation of the criteria and should help assure applicants that their qualifications have been thoroughly and objectively reviewed by experts in the field of lung transplantation. While the amount of time needed to process applications will vary depending on the quality of the application and the volume of applications on hand, we believe those applications that fully address and demonstrate meeting all of the criteria may be completed within 60–90 days.

In approving facilities, we compare the facility's submission against the criteria specified in this notice. In addition to reviewing applications, the individual expert consultants may propose specific changes to the coverage criteria. Changes in coverage criteria will not be implemented, however, without appropriate notice and opportunity for public comment.

Finally, in certain limited cases, exceptions to the strict criteria may be warranted if there is justification and if the facility ensures our objectives of safety and efficacy. We would consider an exception or waiver of a particular criterion if all other criteria are met and the facility is able to provide reasonable justification for not meeting the criterion. For example, we have granted exceptions under the heart transplant program to facilities that fail to meet the volume or survival criteria in one year by a small number due to extraordinary circumstances. We would also consider exceptions for a facility that has only minimally missed the volume criteria but has displayed exemplary survival performance. Another example of a potential exception situation may involve patient selection criteria that do

not comply with those in this notice due to participation in ongoing research work.

Under no circumstances will exceptions be made for facilities whose transplant programs have been in existence for less than 2 years, and applications from consortia will not be approved. We do not believe programs that have been in existence for less than 2 years have data to demonstrate, in a statistically meaningful way, the quality of their program. Further, it is difficult to demonstrate continued commitment to the program without ongoing experience.

We do not believe waivers to allow consortia are appropriate because we have no assurance that the individual facilities that make up the consortia independently meet the conditions of this notice. We believe these conditions must be met individually by a facility in order to demonstrate substantial experience with the procedure. Although we will not approve consortia as lung transplant centers, individual members of a consortium may submit individual applications at any time, and, if they meet the criteria, they will be approved. In these cases, disapprovals would be made by HCFA and do not require prior reviews by the expert consultants. Additionally, exceptions will not be granted on the basis of geographic considerations.

E. Effective Dates

1. Summary of Effective Dates

- A facility that submits a completed application to HCFA by May 3, 1995 and meets all the requirements of this notice will be approved for lung transplants performed beginning February 2, 1995 or the date on which they meet the conditions, whichever is later.
- A facility that submits a completed application to HCFA after May 3, 1995 and meets all the requirements of this notice will be approved for lung transplants performed beginning on the date of the Administrator's approval letter.
- A facility that does not submit application or has not met the requirements of this notice by July 31, 1995 is not eligible for Medicare payment for lung transplants effective July 31, 1995 except as provided below.
- A facility that has received Medicare payment for lung transplants performed based on individual determinations made by the Medicare carrier before July 31, 1995 may continue to receive payment for lung transplants performed for patients who are on a waiting list with that facility as of February 2, 1995.

2. Discussion of Effective Dates

It is not our intent to disrupt the availability of covered lung transplants for Medicare beneficiaries. Consequently, the 180-day limit on Medicare coverage in facilities not meeting the approved criteria in this notice does not apply to those beneficiaries already on the waiting lists of facilities that are currently being paid under the Medicare contractors' local Medicare coverage policy. The contractor will process the claims for all beneficiaries on the lung or heart-lung transplant waiting list as of February 2, 1995 using its current coverage policy regardless of whether the facility meets the criteria contained in this notice. This policy will continue until all Medicare beneficiaries on the waiting list as of February 2, 1995, have been transplanted.

A beneficiary who is not currently on the lung or heart-lung transplant waiting list will be limited to procedures performed in those facilities that meet the provisions of this notice, unless the beneficiary receives a transplant before July 31, 1995 publication that would have been paid under the Medicare contractors' local Medicare coverage policy that was in effect as of the effective date of this notice. We recognize that those beneficiaries not presently on the waiting lists will not know with assurance which facilities will ultimately be approved for coverage before July 31, 1995. However, we wish to point out that if the facility where a beneficiary is wait-listed is not approved for Medicare coverage as the patient nears the time of transplant, the beneficiary may transfer to an approved center without lose of waiting time. That is, the patient will be transferred to the new center with the date he or she was originally wait-listed at the old facility as the start date.

We recognize that 180 days is more than we generally permit for advance notice of implementation of new policy. However, based on previous experience in the heart and liver transplant center approval process, we anticipate that some facilities that meet the criteria will delay application until the last month of the initial 90 day period. Because it generally takes us approximately 2 months to process a complete application we believe it is a reasonable expectation that facilities will have been notified of the decision on their application by that time. By delaying implementation for 180 days, we will assume that there are not lapses in Medicare coverage due to processing time. At the end of the 180 day period, Medicare coverage for transplants other than for beneficiaries on the waiting list as of February 2, 1995 will be limited to approved facilities.

For facilities that apply within 90 days of publication of this notice, and are approved based on that application, payment may be made for transplants as early as the date of publication of this notice, or the date on which they met the conditions, whichever is later.

For facilities that apply more than 90 days from the date of this notice, coverage (for beneficiaries other than those on the facility's waiting list as of the date of this notice in those States where the contractors cover lung transplantation) is effective the date of the Administrator's approval letter. Some contractors are currently covering lung transplants in facilities that may not meet the criteria in this notice. Coverage under the contractors' criteria will be maintained until July 31, 1995. After this date, (except for the beneficiaries identified above) only those facilities approved for national coverage may receive Medicare payment for lung transplants.

F. Payment

For facilities that are approved to perform lung transplants, Medicare covers under Part A (Hospital Insurance) all medically reasonable and necessary inpatient services. For discharges occurring before October 1, 1994, lung transplants were assigned to DRG 75, Major Chest Procedures. As of that date, we established a new DRG 495, Lung Transplant, for lung transplant cases.

We have assigned a relative weight of 12.8346 to DRG 495. This weight is based on Medicare bill data from the federal fiscal year (FY) 1993 Medicare Provider Analysis and Review (MedPAR) file updated through December 1993. The MedPAR file contains 100 percent of the hospital discharge bills for Medicare beneficiaries received by HCFA.

We used the same methodology to calculate the weight for DRG 495 as we do every year in recalibrating the weights for all DRGs. The final rule implementing the FY 1995 changes to the hospital inpatient prospective payment system, which was published in the **Federal Register** on September 1, 1994 (59 FR 45348), contains a complete description of the methodology used to calculate weights.

The Medicare DRG grouping program used under the prospective payment system already groups heart-lung transplant procedures to DRG 103. The weight for DRG 103 is higher than that

assigned to DRG 495, the new lung transplantation DRG. We intend to continue to pay for heart-lung transplants under DRG 103. The mechanisms by which DRG weights are updated allows us to continue to examine the costs associated with heart and heart-lung transplants to assure that payments reflect service intensity.

Organ acquisition costs will be paid separately on a cost basis, in the same manner as kidney acquisition costs are handled in the End-Stage Renal Disease program under Medicare. Physician services, as well as other non-hospital services related to the transplant, and pre- and post-transplant care, may be covered under Medicare Part B and paid under the physician fee schedule or on a reasonable cost basis or other bases.

In accordance with section 1861(s) of the Act, outpatient drugs used in immunosuppressive therapy, including drugs that a patient can self-administer, such as cyclosporine, are covered under Medicare for a period of up to 1 year beginning with the beneficiary's date of discharge from the inpatient hospital stay during which a covered organ transplant was performed. Beginning in 1995, Medicare coverage will be extended to 18 months after the date of discharge for the covered transplant procedure. During 1996, Medicare coverage will be extended to 24 months, and during 1997 to 30 months. For all years thereafter, Medicare coverage will be extended to 36 months after the date of discharge for the covered transplant procedure.

If a Medicare beneficiary receives a covered lung transplant from an approved facility, reasonable and necessary services for follow up care and for complications are covered, as determined by our contractors. In fact, as discussed below, such follow-up or remedial services may be covered even if they are furnished by a hospital that is eligible for Medicare payment but was not specifically approved by Medicare for lung transplantation at the time the lung transplant was performed.

With the exception of those individuals on the waiting list of a facility currently approved for coverage by the fiscal intermediary on the date of this notice, noted earlier, Medicare will not cover lung transplants or retransplants in facilities that have not been approved as Medicare lung transplant facilities under the criteria of this notice as of July 31, 1995. If a Medicare beneficiary received a lung transplant from a facility that is not approved by Medicare for lung transplantation at the time the lung transplant was performed, we will not cover any hospital inpatient services associated with the transplantation procedure. Nor will we cover physician services associated with the transplantation procedure in such cases. Thus, payment will not be made for the performance of the transplant or for any other services associated with the transplantation procedure if performed in a nonapproved facility.

However, after a beneficiary has been discharged from a hospital (whether or not it has been approved by Medicare as a lung transplant center) in which he or she received the noncovered lung transplant, subsequent medical and hospital services required as a result of the transplant are covered in a facility otherwise eligible for in a facility otherwise eligible for Medicare payment if they are reasonable and necessary in all other respects. Thus, coverage is provided for subsequent inpatient stays or outpatient treatment ordinarily covered by Medicare even if the need for treatment arose because of a previous noncovered lung transplant procedure. These services also are covered for Medicare beneficiaries who were not beneficiaries at the time they received a lung transplant, regardless of whether or not the transplant was performed at an approved facility.

We will pay those hospitals currently receiving coverage by local contractors for transplants furnished on or before July 31, 1995. For transplants furnished after that date, except for those beneficiaries on their waiting list on the date of this notice, we will pay only approved facilities. For facilities approved for coverage, we will pay for any covered transplants furnished on or after the date of publication of this notice (if the facility applied during the initial 90 day period) or the date the facility is approved, whichever is later.

III. Waiver of Proposed Notice

We ordinarily publish a proposed notice in the **Federal Register** and invite prior public comment before issuing a final notice. However, the Medicare law, at sections 1871(a)(2) and 1869(b)(3)(B), provide for exception of prior public notice in the establishment of national coverage policy. Specifically, section 1871(a)(2) of the Act states that ''No rule, requirement, or other statement of policy (other than a national coverage determination) that establishes * * * shall take effect unless it is promulgated by the Secretary under regulation * * *'' Section 1869(b)(3)(B) of the Act further specifies that a national coverage determination under section 1862(a)(1) shall not be set aside on the grounds that publication in the **Federal Register** or an opportunity for public comment was not satisfied.

Despite this clear statutory authority to issue national coverage policy without prior public comment, we have historically offered an opportunity for prior public comment in establishing our national coverage policy for heart and liver transplantation. However, in the case of these organ transplants, we had previously established a uniform non-coverage policy. In the case of lung transplants, there is not pre-existing national coverage policy and differing policies have been established by our local intermediaries. Consequently, we believe it is impracticable, unnecessary and contrary to public interest to delay the implementation of this policy while awaiting public comment.

In this final notice with comment period, we are extending Medicare coverage to lung transplantation in facilities that meet specified criteria. Patients currently on the waiting list in facilities that are being paid under the Medicare contractor's local policy will continue to retain coverage regardless of whether the facility is approved under the criteria contained in this notice.

Patients not currently on a waiting list for a lung transplant may be listed at the facility of their choice pending approval of the facility by the Administrator. If the facility is not approved when the patient is getting close to the top of the list, the patient my be transferred to an approved center without loss of waiting time. That is, it is the policy of the United Network for Organ Sharing (UNOS) to manually adjust the waiting time for patients who transfer facilities so that patients are credited wait time from when they were first listed. UNOS has adopted this policy to encourage patients to be transplanted at centers that are most proficient in transplantation. Consequently, no Medicare beneficiaries would be adversely impacted by this rule.

On the other hand, delay of this final notice until we could publish a proposed notice would result in the unavailability of coverage of lung transplantion to some facilities that would meet the quality standards, due to the fact that the contractor in their area has not determined the procedure to be covered under Medicare. In an informal survey of the Medicare contractors, we believe at least 16 contractors are not currently covering lung transplantation and even do not cover heart-lung transplantation. Further, immunosuppressive drug therapy is covered only if the transplant is covered. Thus, beneficiaries currently being denied coverage under local contractor policies are excluded from coverage of needed drug therapy.

More importantly, we are concerned that Medicare beneficiaries may be receiving transplants in facilities that do not offer the assurance of high quality services that are commensurate with the criteria contained in this notice. That is, given the reliance on outcome and patient care practices inherent in this coverage policy, we are convinced that facilities meeting the criteria set forth in this notice clearly provide significantly superior services from a quality perspective as demonstrated by the facility's patient care polices and survival data. We are concerned that beneficiaries electing to have lung transplants performed in facilities that do not meet this criteria may not be aware of the increased risk of poor outcome that is associated with this decision.

Further, we are concerned that due to individual contractor local decisions, Medicare program expenditures may be spent in facilities that are not yet proficient in the procedure so as to produce high quality outcomes. Thus, continued coverage of lung transplants in these high risk situations may result in increased expenditures for complications that may arise from the transplant procedure that may have been avoided had the procedure been performed in a facility that meets these criteria.

Thus, it would be impracticable, unnecessary, and contrary to the public interest to delay this extension of coverage until we could publish a proposed notice and solicit comments. That is, since no beneficiaries are disadvantaged by this notice due to the construction of the effective date in a fashion that recognizes the coverage for patients already on the waiting list of facilities so covered, it is impracticable and contrary to public interest to delay implementation of these standards that promote highest quality services to Medicare beneficiaries and the extension of coverage to qualified facilities located in areas where the Medicare contractor local policy excludes or restricts coverage. We, therefore, find good cause to waive prior proposed notice.

IV. Response to Comments

Because of the large number of items of correspondence we normally receive on FR documents published for comment, we are not able to acknowledge or respond to them individually. We will consider all comments we receive by the date and time specified in the **DATES** section of this preamble, and, if we proceed with a subsequent document, we will respond to the comments in that document.

V. Paperwork Burden

This notice contains information collection requirements that are subject to the Office of Management and Budget approval under the Paperwork Reduction Act of 1980 (44 U.S.C. 3501 *et seq.*). When OMB approves these provisions, we will publish a notice to that effect. The information collection concerns the requirement that a facility that wishes to obtain Medicare coverage for lung transplantation submit an application for approval and, once approved, report events or changes that would affect its approved status. We also require that the facility periodically submit data documenting such things as patients selected for transplants, protocols used, short- and long-term outcomes on patients who undergo lung transplantation. Public reporting burden for this collection of information is expected to be 100 hours.

Organizations and individuals desiring to submit comments on the information collection and recordkeeping requirements should direct them to the OMB official whose name appears in the **ADDRESSES** section of this notice.

VI. Regulatory Impact Analysis

A. Introduction

We generally prepare a regulatory flexibility analysis that is consistent with the Regulatory Flexibility Act (RFA) (5 U.S.C. 601 through 612) unless the Secretary certifies that a final notice will not have a significant economic impact on a substantial number of small entities. For purposes of the RFA, all facilities that consider themselves capable of performing lung transplants are considered to be small entities. Individuals and States are not included in the definition of a small entity.

In addition, section 1102(b) of the Act requires the Secretary to prepare a regulatory impact analysis for any notice that may have a significant impact on the operations of a substantial number of small rural hospitals. This analysis must also conform to the provisions of section 604 of the RFA. For purposes of section 1102(b) of the Act, we define a small rural hospital as a hospital which is located outside a Metropolitan Statistical Area and has fewer than 50 beds.

This notice will affect all facilities that are, or are planning on, performing lung transplants and may have an effect on the ability of those facilities to compete. We believe this notice will not have a significant impact on a substantial number of small rural hospitals since it is unlikely that small rural hospitals will be performing lung transplants. However, if there are any, they will not be affected by this notice differently than any other hospital. We have prepared the following analysis which, in combination with the other sections of this notice, is intended to conform to the objectives of the RFA and section 1102(b) of the Act.

B. Entities Affected

This notice provides for Medicare coverage of lung transplants furnished to patients with certain conditions in facilities approved by HCFA as meeting the minimum criteria specified in the notice. Lung transplantation, as many developing procedures, grew rapidly—from 11 in 1987 to 535 in 1992. However, donor availability is a significant limitation, and the rate of growth is slowing—in 1993 only 654 persons, from a waiting list of 1,300, received lung transplants. Although we do not have complete data, based on informal interviews with staff from a large sample of active lung transplant programs, we believe only a small number of Medicare beneficiaries (approximately 100) presently are lung transplant candidates because of their age and the presence of other complicating conditions. Our billing data indicate that, in 1993, Medicare contractors approved payments associated with 90 transplants.

Typically, a small number of facilities are involved in initially developing procedures such as lung transplantation. As of January 1994, the number of medical institutions in the United States with lung transplant programs had grown to 76 (according to information from the United Network for Organ Sharing). However, data indicate that there still is a concentration of experience among a much smaller number of facilities. We believe that the demand for lung transplants will grow as more physicians and patients recognize lung transplantation as a treatment resulting in increased life expectancy and in improved quality of life, and that the demand will be met by facilities offering the procedure.

The number of lung transplants performed is dependent upon many factors, including the supply of suitable donor organs (only 5 to 10 percent of available donors have lungs considered acceptable for transplantation), the existence of qualified facilities and personnel, and the availability of funding for the procedure.

Payment for lung transplants is available from some third party insurers, some State Medicaid programs,

private funds, and public fund-raising efforts. In the absence of a national Medicare coverage policy, each of the Medicare contractors uses its customary review and approval procedures to determine whether bills or claims associated with lung transplants should be paid.

Payment data indicate that Medicare beneficiaries make up only a small portion of lung transplant recipients. The proportion of transplants covered by Medicare is assumed to grow slightly over time—from 13 percent in 1993 to 20 percent in 1995, and up to 24 percent in 1999—as improved techniques allow transplantation of older and disabled patients.

The United Network for Organ Sharing currently lists 77 facilities as lung transplant centers. Seven of these facilities are children's hospitals and not subject to the criteria in sections II.B.1–9 of this notice. Of the remaining 70 facilities, 40 do not maintain an active ongoing lung transplant program. Although these facilities operate active transplant programs for other organs, they do lung transplantation sporadically, sometimes going an entire year without a single lung transplant. These centers currently have less than 10 people on their waiting list, and based on an informal survey of a sample of these centers, we estimate that it is rare for a Medicare beneficiary to be listed at one of these centers. Consequently, we do not believe that these centers are significantly impacted by this notice.

Based on our experience with application of a similar approval process to liver transplant facilities and review of available data on volume, we estimate that application of the criteria in this notice will result in the approval of 10 to 15 of the remaining 30 facilities within the first year, with the total rising to approximately 20 within the next year. Thus, we expect to approve at least two-thirds of the active lung transplant programs within the first 2 years. Many of the remaining third are expected to qualify by the third year, and we estimate the addition to the list of approved facilities of at least one facility per year for several more years. Ultimately, we expect all 30 of the active programs will be approved for Medicare coverage.

Many facilities that have performed few lung transplants will not meet the levels of experience and success required under the facility criteria. However, some might be found to have acceptable clinical programs with an adequate prospect for successful outcomes. We would encourage these facilities to apply when they have achieved that success. We recognize that the criteria for experience, survival rates, and facility commitment are demanding. However, our goal in requiring facilities to meet certain criteria is not to restrict competition but to maintain the quality of services required by this complex procedure.

Facilities that apply (or reapply) will continue to be approved as they come to meet the facility criteria. There will be neither a cutoff date for receipt of applications nor a limit on the number of approved facilities. For the purpose of estimating the costs of covering lung transplants, we expect, by fiscal year 1998, that many, if not most, of the hospitals actively performing lung transplants could meet the criteria if they desire Medicare approval. We do not have any advance information on which facilities will apply or meet the criteria.

Medicare approval status could eventually provide those hospitals that meet the criteria for performing lung transplants with what are perceived to be advantages over non-approved facilities. In addition to the guaranteed Medicare payment for approved procedures, these hospitals might expect to see their prestige and standing as health care providers increase as a result of their approval as a Medicare lung transplant center. This, in turn, could enable them to increase their overall market share of lung transplants and other complicated procedures at the expense of hospitals that also perform lung transplants but do not meet our criteria. Therefore, those facilities that do not meet the criteria may view our notice as having a significant adverse effect on competition.

Some facilities may choose to not apply for approval as a transplant facility and to discontinue their transplant programs. So as to not curtail availability of coverage to individuals currently on a waiting list at a facility now recognized by a fiscal intermediary under procedures in effect prior to the date of this notice, we are making a special exception. Lung transplants furnished by a facility to a Medicare patient on its waiting list on the date of this notice, will continue to be paid by Medicare using the contractor's current coverage criteria, even if the procedure occurs more than 180 days after the publication of the notice and the facility is not approved under the criteria of this notice on the date the transplant occurs. Thus, we do not believe that the criteria would in any way reduce the number or availability of transplants to patients that are currently on a waiting list for a lung transplant.

We expect that Medicare coverage of lung transplantation could prompt additional third party payers, including some State Medicaid plans, to consider covering this procedure and to create incentives for some facilities to establish lung transplant programs. However, third party payers that either already cover or intend to cover lung transplants are not required to adopt our coverage standards.

C. Projected Expenditures Under Medicare

It is difficult to make a precise estimate of future Medicare costs, largely due to the difficulty of predicting the availability of donor organs over the next few years. All dollar estimates depend on assumptions and estimates related to the number of covered transplants. In 1993, Medicare beneficiaries received 122 of the 654 lung transplants performed. In the absence of a national Medicare coverage policy, Medicare contractors approved payments associated with 90 of the 122 transplants.

Our projected estimates are based on some facilities meeting our requirements effective on the date of this notice. In developing these estimates, we made assumptions about the total number of lung transplants performed nationwide and the future rate of increase of the number of transplants performed at approved facilities. We assumed this would go up with the number of facilities, but the rate of increase would level off due to competition for suitable recipients and donor organs. The estimates include not only the cost of transplantation in an approved facility, but associated immunosuppressive drugs, and follow-up care resulting from the extension of this coverage.

Due to the sensitivity of these assumptions and the uncertainty of actual outcomes, we view our projection of expenditure increases as an opinion, rather than an estimate.

Fiscal year	Projected total number of LTs	Number paid by Medicare under current policy	Medicare costs under current policy (millions)	Number of additional LTs as a result of expanded coverage	Additional Medicare costs (millions)
1995	817	162 (20%)	$18	7	$1
1996	878	183 (21%)	22	8	2
1997	939	205 (22%)	26	9	3
1998	1003	229 (23%)	31	9	3
1999	1068	254 (24%)	36	10	4

D. Projected Savings Under Medicaid

Medicaid coverage of transplants is a decision of the individual State. As of 1990, lung transplants were covered by 15 States. We cannot predict whether Medicare coverage will increase the number of State Medicaid programs that will cover lung transplants or whether the Medicare coverage criteria will cause more restrictive policies than would otherwise occur. Medicare coverage of lung transplants will reduce States' payments for transplantation in Medicare beneficiaries who also qualify under Medicaid. To the extent that Medicare payment supplants Medicaid funding, the Federal budget receives an offset for the Federal share of Medicaid expenditures. Under current policy, we estimate the annual offset to be $5 million.

E. Alternatives Considered

We considered allowing all Medicare participating hospitals to establish transplant programs without additional facility criteria. Our major reason for rejecting this alternative was that it would permit uncontrolled proliferation of transplant facilities, raising questions about the quality of services, given the limited availability of donor organs and experienced teams. Further, because the procedure would be spread among a larger number of facilities, it is likely the average experience level would be lower and would probably result in lower success and survival rates among recipients. Our responsibilities for the well-being of Medicare beneficiaries and for the prudent expenditure of Medicare trust funds dictate that we pursue a cautious policy with respect to a procedure as complex as lung transplantation.

F. Conclusion

We believe that the criteria we have developed are the most effective means available to ensure that the lung transplants that are made available to Medicare beneficiaries are provided in a safe and effective manner so that they can be considered to be reasonable and necessary within the meaning of the law. We believe that the conditions set forth in this notice would maintain the quality of services required by this complex procedure, provide Medicare coverage of the procedure only at facilities and under conditions that have been shown to be safe and effective, and allow entry of new qualified providers. Although the criteria are somewhat restrictive, we believe this approach is justified, particularly in view of the typical relationship between experience and quality of service.

In accordance with the provisions of Executive Order 12866, this notice was reviewed by the Office of Management and Budget.

Authority: Section 1862(a)(1)(A) of the Social Security Act (42 U.S.C. 1395y(a)).

(Catalog of Federal Domestic Assistance Program No. 13.773 Medicare—Hospital Insurance Program; and No. 13.774, Medicare—Supplementary Medical Insurance Program)

Dated: September 26, 1994.

Bruce C. Vladeck,

Administrator, Health Care Financing Administration.

Dated: December 7, 1994.

Donna E. Shalala,

Secretary .

[FR Doc. 95–2559 Filed 2–1–95; 8:45 am]

BILLING CODE 4120–01–M

National Institutes of Health

Division of Research Grants; Notice of Closed Meetings

Pursuant to Section 10(d) of the Federal Advisory Committee Act, as amended (5 U.S.C. Appendix 2), notice is hereby given of the following Division of Research Grants Special Emphasis Panel (SEP) meetings:

Purpose/Agenda: To review individual grant applications
Name of SEP: Chemistry and Related Sciences
Date: February 9, 1995
Time: 1:00 p.m.
Place: NIH, Westwood Building, Room 426A, Telephone Conference
Contact Person: Dr. Martin Padarathsingh, Scientific Review Admin., 5333 Westbard Ave., Room 426A, Bethesda, MD 20892, (301) 594–7192

Name of SEP: Behavioral and Neurosciences
Date: February 22, 1995
Time: 2:00 p.m.
Place: NIH, Westwood Building, Room 305, Telephone Conference
Contact Person: Dr. Peggy McCardle, Scientific Review Administrator, 5333 Westbard Ave., Room 305, Bethesda, MD 20892, (301) 594–7293

Name of SEP: Multidisciplinary Sciences
Date: February 26–28, 1995
Time: 7:00 p.m.
Place: LaGuardia Mariott Airport Hotel, New York City, NY
Contact Person: Dr. Nabeeh Mourad, Scientific Review Administrator, 5333 Westbard Ave., Room 2A04, Bethesda, MD 20892, (301) 594–7213

Name of SEP: Multidisciplinary Sciences
Date: March 2–3, 1995
Time: 8:30 a.m.
Place: Embassy Suites, Washington, DC
Contact Person: Dr. Donald Schneider, Scientific Review Administrator, 5333 Westbard Ave., Room 2A05, Bethesda, MD 20892, (301) 594–7053

Name of SEP: Behavioral and Neurosciences
Date: March 7–8, 1995
Time: 8:30 a.m.
Place: Hyatt Regency, Bethesda, MD
Contact Person: Dr. Peggy McCardle, Scientific Review Administrator, 5333 Westbard Ave., Room 305, Bethesda, MD 20892, (301) 594–7293

Name of SEP: Clinical Sciences
Date: March 8, 1995
Time: 8:30 a.m.
Place: Bethesda Marriott Hotel, Bethesda, MD
Contact Person: Dr. Harold Davidson, Scientific Review Administrator, 5333 Westbard Ave., Room 354A, Bethesda, MD 20892, (301) 594–7313

Name of SEP: Clinical Sciences
Date: March 21, 1995
Time: 3:00 p.m.
Place: NIH, Westwood Building, Room 355B, Telephone Conference
Contact Person: Dr. Jerrold Fried, Scientific Review Administrator, 5333 Westbard Ave., Room 355B, Bethesda, MD 20892, (301) 594–7261

Purpose/Agenda: To review Small Business Innovation Research Program grant applications
Name of SEP: Biological and Physiological Sciences
Date: February 17, 1995
Time: 2:30 p.m.
Place: Crowne Plaza, Rockville, MD
Contact Person: Dr. Abubakar Shaikh, Scientific Review Administrator, 5333Westbard Ave., Room 218A, Bethesda, MD 20892, (301) 594–7368

Name of SEP: Multidisciplinary Sciences
Date: March 1–3, 1995
Time: 8:00 a.m.

Place: Holiday Inn, Bethesda, MD
Contact Person: Dr. Dharam Dhindsa, Scientific Review Administrator, 5333 Westbard Ave., Room 2A15A, Bethesda, MD 20892, (301) 594–7683

Name of SEP: Multidisciplinary Sciences
Date: March 5–6, 1995
Time: 5:00 p.m.
Place: Embassy Suites, Washington, DC
Contact Person: Dr. Richard Panniers, Scientific Review Administrator, 5333 Westbard Ave., Room 2A17, Bethesda, MD 20892, (301) 594–7348

Name of SEP: Multidisciplinary Sciences
Date: March 6–7, 1995
Time: 8:30 a.m.
Place: Chevy Chase Holiday Inn, Chevy Chase, MD
Contact Person: Dr. Donald Schneider, Scientific Review Administrator, 5333 Westbard Ave., Room 2A05, Bethesda, MD 20892, (301) 594–7053

Name of SEP: Multidisciplinary Sciences
Date: March 6–8, 1995
Time: 7:00 a.m.
Place: Bethesda Marriott Hotel, Bethesda, MD
Contact Person: Dr. Nabeeh Mourad, Scientific Review Administrator, 5333 Westbard Ave., Room 2A04, Bethesda, MD 20892, (301) 594–7213

Name of SEP: Multidisciplinary Sciences
Date: March 7–9, 1995
Time: 7:00 p.m.
Place: Embassy Suites, Washington, DC
Contact Person: Dr. Richard Panniers, Scientific Review Administrator, 5333 Westbard Ave., Room 2A17, Bethesda, MD 20892, (301) 594–7348

Name of SEP: Multidisciplinary Sciences
Date: March 7–9, 1995
Time: 8:30 a.m.
Place: Chevy Chase Holiday Inn, Chevy Chase, MD
Contact Person: Dr. Donald Schneider, Scientific Review Administrator, 5333 Westbard Ave., Room 2A05, Bethesda, MD 20892, (301) 594–7053

Name of SEP: Multidisciplinary Sciences
Date: March 12–14, 1995
Time: 7:00 p.m.
Place: Chevy Chase Holiday Inn, Chevy Chase, MD
Contact Person: Dr. Nadarajen Vydeligum, Scientific Review Admin., 5333 Westbard Ave., Room 2A07B, Bethesda, MD 20892, (301) 594–7350

Name of SEP: Multidisciplinary Sciences
Date: March 13, 1995
Time: 8:00 a.m.
Place: McLean Hilton, McLean, VA
Contact Person: Dr. Eileen Bradley, Scientific Review Administrator, 5333 Westbard Ave., Room 2A10, Bethesda, MD 20892, (301) 594–7188

Name of SEP: Multidisciplinary Sciences
Date: March 16–17, 1995
Time: 8:00 a.m.
Place: Crowne Plaza, Rockville, MD
Contact Person: Dr. Bill Bunnag, Scientific Review Administrator, 5333 Westbard Ave., Room 2A07A, Bethesda, MD 20892, (301) 594–7360

Name of SEP: Multidisciplinary Sciences
Date: March 16–18, 1995
Time: 8:00 a.m.
Place: Georgetown Holiday Inn, Washington, DC
Contact Person: Dr. Marjam Behar, Scientific Review Administrator, 5333 Westbard Ave., Room 2A11A, Bethesda, MD 20892, (301) 594–7376

Name of SEP: Multidisciplinary Sciences
Date: March 26–28, 1995
Time: 7:00 p.m.
Place: Crowne Plaza, Rockville, MD
Contact Person: Dr. Nadarajen Vydelingum, Scientific Review Admin., 5333 Westbard Ave., Room 2A07B, Bethesda, MD 20892, (301) 594–7350

Name of SEP: Multidisciplinary Sciences
Date: March 30–31, 1995
Time: 8:00 a.m.
Place: Crowne Plaza, Rockville, MD
Contact Person: Dr. Bill Bunnag, Scientific Review Administrator, 5333 Westbard Ave., Room 2A07A, Bethesda, MD 20892, (301) 594–7360.

The meetings will be closed in accordance with the provisions set forth in sec. 552b(c)(4)and 552b(c)(6), Title 5, U.S.C. Applications and/or proposals and the discussions could reveal confidential trade secrets or commercial property such as patentable material and personal information concerning individuals associated with the applications and/or proposals, the disclosure of which would constitute a clearly unwarranted invasion of personal privacy.

This notice is being published less than 15 days prior to the meeting due to the urgent need to meet timing limitations imposed by the grant review cycle.

(Catalog of Federal Domestic Assistance Program Nos. 93.306, 93.333, 93.337, 93.393–93.396, 93.837–93.844, 93.846–93.878, 93.892, 93.893, National Institutes of Health, HHS)

Dated: January 27, 1995.

Susan K. Feldman,

Committee Management Officer, NIH.

[FR Doc. 95–2535 Filed 2–1–95; 8:45 am]

BILLING CODE 4140–01–M

Health Resources and Services Administration

Notice of Filing of Annual Report of Federal Advisory Committee

Notice is hereby given that pursuant to section 13 of Public Law 92–463, the Annual Report for the following Health Resources and Service Administration's Federal Advisory Committee has been filed with the Library of Congress:

National Advisory Committee on Rural Health Copies are available to the public for inspection at the Library of Congress Newspaper and Current Periodical Reading Room, Room 1026, Thomas Jefferson Building, Second Street and Independence Avenue, S.E., Washington, D. C. Copies may be obtained from: Dena S. Puskin, Sc.D., Executive Secretary, National Advisory Committee on Rural Health, Room 9–05, Parklawn Building, 5600 Fishers Lane, Rockville, Maryland 20857, Telephone (301) 443–0836.

Dated: January 27, 1995.

Jackie E. Baum,

Advisory Committee Management Officer, HRSA.

[FR Doc. 95–2505 Filed 2–1–95; 8:45 am]

BILLING CODE 4160–15–P

DEPARTMENT OF HOUSING AND URBAN DEVELOPMENT

Office of the Assistant Secretary for Public and Indian Housing

[Docket No. N–95–3839; FR–3822–N–02]

NOFA for the Public and Indian Housing Drug Elimination Program (PHDEP); Correction

AGENCY: Office of the Assistant Secretary for Public and Indian Housing, HUD.

ACTION: Notice of funding availability (NOFA) for fiscal year 1995; correction.

SUMMARY: On January 5, 1995 (59 FR 1846), HUD published a NOFA that announced FY 1995 funding of $250,391,741 under the Public and Indian Housing Drug Elimination Program (PHDEP) for use in eliminating drug-related crime. The purpose of this notice is to make corrections to the section specifying eligible applicants for one of the activities under the NOFA and to the number of points in one of the selection criteria.

DATES: The original application deadline date is not changed. Applications must be received at the local HUD Field Office on or before Friday, April 14, 1995, at 3:00 p.m., local time. This application deadline is firm as to date and hour. In the interest of fairness to all competing applicants, the Department will treat as ineligible for consideration any application that is received after the deadline. Applicants should take this practice into account and make early submission of their materials to avoid any risk of loss of eligibility brought about by any unanticipated or delivery-related problems. A Facsimile (FAX) is not acceptable.

FOR FURTHER INFORMATION ON THE PUBLIC AND INDIAN HOUSING DRUG ELIMINATION PROGRAM, PUBLIC HOUSING, CONTACT: The local HUD Field Office, Director, Public Housing Division (Appendix ''A'' of this NOFA), or Malcolm E. Main, Crime Prevention and Security Division (CPSD), Office of Community Relations and Involvement (OCRI), Public and

Indian Housing, Department of Housing and Urban Development, Room 4116, 451 Seventh Street, SW., Washington, DC 20410, telephone (202) 708–1197. A telecommunications device for hearing or speech impaired persons (TDD) is available at (202) 708–0850. (These are not toll-free telephone numbers.)

FOR FURTHER INFORMATION ON THE PUBLIC AND INDIAN HOUSING DRUG ELIMINATION PROGRAM FOR NATIVE AMERICAN PROGRAMS CONTACT: The local HUD Field Office Administrator, Office of Native American Programs (Appendix ''A'' of this NOFA), or Tracy Outlaw, Office of Native American Programs, Public and Indian Housing, Department of Housing and Urban Development, Room B133, 451 Seventh Street, SW., Washington, DC 20410, telephone (202) 708–0088. A telecommunications device for hearing or speech impaired persons (TDD) is available at (202) 708–0850. (These are not toll-free telephone numbers.)

FOR FURTHER INFORMATION REGARDING ASSISTED (NON–PUBLIC AND INDIAN) HOUSING DRUG ELIMINATION PROGRAM CONTACT: Lessley Wiles, Office of Multifamily Housing Management, Department of Housing and Urban Development, Room 6176, 451 Seventh Street SW., Washington, DC 20410. Telephone (202) 708–2654. TDD number (202) 708–4594. (These are not toll-free numbers.)

SUPPLEMENTARY INFORMATION: A Notice of Funding Availability (NOFA) announcing HUD's Fiscal Year (FY) 1995 funding of $250,391,741 under the Public and Indian Housing Drug Elimination Program (PHDEP) was published on January 5, 1995 (59 FR 1846). This notice makes several corrections to the FY 1995 PHDEP NOFA.

The first sentence of Paragraph I.(c)(1)(i) of the NOFA reads: ''Contracting for security guard personnel services in public and Indian housing developments proposed for funding is permitted under this program.'' The phrase ''or employment of'' should have followed the word ''Contracting'' in that sentence. This notice inserts the missing phrase.

Paragraph I.(c)(1)(ii) of the NOFA, Employment of Housing Authority Police, which lists housing authorities eligible to apply because they have their own housing authority (HA) police department, did not include the HA for Buffalo, NY. In addition, the listing for the New York City Department of Housing Preservation and Development, NYC, NY, should have read: New York City Public Housing Authority, NYC, NY. This notice corrects the January 5, 1995 PHDEP NOFA by republishing the entire list of eligible applicants under paragraph I.(c)(1)(ii) to add the one omitted HA to the list, and to amend the listing for the New York City Public Housing Authority.

The second sentence of Paragraph I.(c)(5)(i) of the NOFA reads: ''Members must be volunteers and must be tenants of the public and Indian housing development that the tenant (resident) patrol represents.'' This notice deletes the phrase ''that the tenant (resident) patrol represents'' and replaces it with the phrase ''housing authority.''

Accordingly, FR Doc. 95–260, the FY 1995 NOFA for the Public and Indian Housing Drug Elimination Program (PHDEP), published in the **Federal Register** on January 5, 1995 (60 FR 1846) is corrected as follows:

1. On page 1848, in column 3, paragraph I.(*c*)(1)(i), on page 1849, in columns 1 and 2, paragraph I.(*c*)(1)(ii) (1) through (11), and on page 1851, in column 3, the second sentence in paragraph I.(c)(5)(i) are corrected to read as follows:

I. Purpose and Substantive Description

* * * * *

(c) * * *

(1) * * *

(i) *Contracted Security Guard Personnel.* Contracting for/or employment of security guard personnel services in public and Indian housing developments proposed for funding is permitted under this program. Contracting for security guard personnel services is defined as a competitive process in which individual companies and/or individuals participate.

(ii) *Employment of Housing Authority Police.* Employment of additional housing authority police officers is permitted only by housing authorities that already have their own housing authority police departments, which are the following housing authorities:

(1) Baltimore HA and Community Development, Baltimore, MD.

(2) Boston HA, Boston, MA.

(3) Buffalo HA, Buffalo, NY.

(4) Chicago HA, Chicago, IL.

(5) Cuyahoga Metropolitan HA, Cleveland, OH.

(6) HA of the City of Los Angeles, LA, CA.

(7) HA of the City of Waterbury, Waterbury, CT.

(8) HA of the City of Oakland, Oakland, CA.

(9) HA of the City of Pittsburgh, Pittsburgh, PA.

(10) New York City Public HA, NYC, NY.

(11) Philadelphia HA, Philadelphia, PA.

(12) Virgin Islands HA, Virgin Islands.

* * *

* * * * *

(5) *Voluntary Tenant Patrols.*

(i) The provision of training, communications equipment, and other related equipment (including uniforms), for use by voluntary tenant patrols acting in cooperation with officials of local law enforcement agencies is permitted under this program. Members (residents) must be volunteers and must be tenants of the public and Indian housing development(s)/housing authority. * * *

* * * * *

Dated: January 25, 1995.

Joseph Shuldiner,

Assistant Secretary for Public and Indian Housing.

[FR Doc. 95–2561 Filed 2–1–95; 8:45 am]

BILLING CODE 4210–33–M

DEPARTMENT OF THE INTERIOR

Office of the Secretary

Section 4(e) Conditions for the Kerr Hydroelectric Project, Montana

AGENCY: Department of the Interior.

ACTION: Extension of public comment period.

SUMMARY: On November 22, 1994 (59 FR 60158), the Department of the Interior published a notice of availability and a request for comment regarding its proposed Section 4(e) conditions for the Kerr Hydroelectric Project license. The public comment period was subsequently extended on December 19, 1994 (59 FR 65379). In an effort to allow more time for public participation the Department is extending the comment period through March 7, 1995. Pursuant to the Federal Power Act, 16 U.S.C. 797(e), the proposed Section 4(e) conditions provide for the adequate protection and utilization of the Flathead Indian Reservation and the Flathead Waterfowl Production Area administered by the Fish and Wildlife Service.

DATES: The Department will consider all comments on the proposed Section 4(e) conditions received on or before March 7, 1995 in the formulation of the Secretary's final Section 4(e) conditions for the Kerr Hydroelectric Project.

ADDRESSES: Comments should be sent to Anne Crichton, Department of the Interior, Office of the Solicitor, 1849 C Street NW., Mail Stop 6456, Washington, DC 20240.

FOR FURTHER INFORMATION CONTACT: Janice Schneider, Department of the

Interior, Office of the Solicitor, 1849 C Street NW., Mail Stop 6456, Washington, DC 20240, 202–208–6967.

SUPPLEMENTARY INFORMATION: The November 22, 1994 (59 FR 60158) notice of availability and request for comment provided a 30 day period during which the Department would receive comments regarding its proposed Section 4(e) conditions for the Kerr Hydroelectric Project. Pursuant to the Federal Power Act, 16 U.S.C. 797(e), the proposed Section 4(e) conditions provide for the adequate protection and utilization of the Flathead Indian Reservation and the Flathead Waterfowl Production Area administered by the Fish and Wildlife Service. The proposed conditions for the Flathead Indian Reservation provide for the imposition of a base load operational scenario at the Kerr Project. This operational scenario precludes the use of Kerr Dam as a load regulating or peak power generation facility, and requires minimum flows, certain restrictions on flow fluctuations (ramping rates), and a two year ramping rate study. In addition, the proposed conditions provide for non-operational measures designed to protect and provide for adequate utilization of the Flathead Indian Reservation in conjunction with operational measures. The non-operational measures include the development of a Fish and Wildlife Implementation Strategy, development of an operational rule curve, habitat acquisition,[1] habitat development, fishery supplementation and reintroduction, development of recreational resources, and the identification and projection of cultural resources on the Flathead Indian Reservation. The proposed conditions for the Flathead Waterfowl Production Area provide for the imposition of erosion control on the north shore of Flathead Lake and the upper Flathead River, island restoration, and habitat acquisition and development. The costs of all measures will be borne by the project licensees.

On December 19, 1994, the Department extended the public comment period and announced the availability of two technical documents that support the proposed Section 4(e) conditions, the ''Kerr Hydro-electric Project Report'' by Stetson Engineers, Inc., and ''An Evaluation of the Wildlife Components of the Kerr Dam Project Mitigation and Management Plan and Recommended Section 4(e) Articles'' by BioSystems Analysis, Inc. Due to unforeseen delays in the public release of the report entitled ''An Evaluation of the Wildlife Components of the Kerr Dam Project Mitigation and Management Plan and Recommended Section 4(e) Articles,'' the Department is extending the public comment period until March 7, 1995. The comment period, which began on November 22, 1994, therefore, consists of a total of 105 days. All comments are due to the Department on or before March 7, 1994. The proposed conditions and the above referenced reports are available for review and copying at the Department of the Interior, 1849 C Street NW., Washington, DC in room 6443. Copies of the proposed Section 4(e) conditions and the above referenced reports will be made available to all interested parties upon request.

Dated: January 30, 1995.

Willie R. Taylor,

Director, Office of Environmental Policy and Compliance.

[FR Doc. 95–2598 Filed 2–1–95; 8:45 am]

BILLING CODE 4310–02–M

[1] The habitat acquisition component of the proposed Section 4(e) conditions has recently been amended.

Fish and Wildlife Service

Notice of Receipt of Applications for Permit

The following applicants have applied for a permit to conduct certain activities with endangered species. This notice is provided pursuant to Section 10(c) of the Endangered Species Act of 1973, *as amended* (16 U.S.C. 1531, *et seq.*):

PRT–798085

Applicant: Los Angeles Zoo, Los Angeles, CA.

The applicant requests a permit to import a female captive-bred Andean condor (*Vulture gryphus*) from the Buenos Aires Zoo, Buenos Aires, Argentina, for the purpose of enhancement of propagation and survival of the species through captive-breeding.

PRT–798343

Applicant: Top Cats, Ltd., New Hill, NC.

The applicant requests a permit to import one male captive-bred bengal tiger (*Panthera tigris*) and a one female captive-bred leopard (*Panthera pardus*) from Nikki Riddell, London, England, for the purpose of enhancement of survival of the species through conservation education.

PRT–783660

Applicant: Keith A. Evans, Las Vegas, NV.

The applicant request a permit to export and reimport a pair of captive-bred leopards (*Panthera pardus*), a pair of captive-born snow leopards (*Panthera uncia*) and one male and two female captive-born tigers (*Panthera tigris*) to and from Europe, for the purpose of enhancement of survival of the species through conservation education.

PRT–798280

Applicant: Gluck Equine Res. Ctr., University of Kentucky, Lexington, KY.

The applicant requests a permit to import from Canada and Australia biological samples of blood and DNA from captive held zoo animals of the following species: Przewalski's horse (*Equus przewalskii*), Grevy's zebra (*E. grevyi*), Asian wild ass (*E. hemionus*), Hartmann's mountain zebra (*E. zebra hartemannae*), cape mountain zebra (*E. zebra zebra*), African wild ass (*E. africanus*), black rhinoceros (*Diceros bicornis*), Sumatran rhinoceros (*Dicerorhinus sumatrensis*), and nothern white rhinoceros (*Ceratotherium simum cottoni*), taken in the course of normal husbandry procedures for the purpose of scientific research on equine evolution.

PRT–798281

Applicant: Gluck Equine Res. Ctr., University of Kentucky, Lexington, KY.

The applicant requests a permit to export to Australia samples of purified DNA of endangered and threatened equines and rhinoceros listed in PRT–798281 (above) for the purpose of scientific research on equine evolution.

PRT–798275

Applicant: Ringling Bros. and Barnum & Bailey Circus, Vienna, VA.

The applicant requests a permit to export and re-import 2 captive-born and 7 captive-held Asian elephants (*Elaphus maximus*) to/from the Palacio de los Deportes in Mexico City, Mexico, for the purpose of enhancement of survival of the species through conservation education.

Written data or comments should be submitted to the Director, U.S. Fish and Wildlife Service, Office of Management Authority, 4401 North Fairfax Drive, Room 420(c), Arlington, Virginia 22203 and must be received by the Director within 30 days of the date of this publication.

Documents and other information submitted with these applications are available for review, subject to the requirements of the Privacy Act and Freedom of Information Act, by any party who submits a written request for a copy of such documents to the following office within 30 days of the date of publication of this notice: U.S. Fish and Wildlife Service, Office of Management Authority, 4401 North Fairfax Drive, Room 420(c), Arlington,

Virginia 22203. Phone: (703/358–2104); FAX: (703/358–2281).

Dated: January 27, 1995.

Caroline Anderson,

Acting Chief, Branch of Permits, Office of Management Authority.

[FR Doc. 95–2532 Filed 2–1–95; 8:45 am]

BILLING CODE 4310–55–P

Klamath River Basin Fisheries Task Force; Meeting

AGENCY: Fish and Wildlife Service, Interior.

ACTION: Notice of meeting.

SUMMARY: Pursuant to the Federal Advisory Committee Act, this notice announces a meeting of the Klamath River Basin Fisheries Task Force, established under the authority of the Klamath River Basin Fishery Resources Restoration Act. The meeting is open to the public.

DATES: The Klamath River Basin Fisheries Task Force will meet from 8 a.m. to 5:30 p.m. on Thursday, February 16, 1995, and from 8 a.m. to 12:30 p.m. on Friday, February 17, 1995.

ADDRESSES: The meeting will be held at the Eagle House Hotel, 2nd and C Streets, Eureka, California 95501.

FOR FURTHER INFORMATION CONTACT: Dr. Ronald A. Iverson, Project Leader, U.S. Fish and Wildlife Service, P.O. Box 1006 (1215 South Main, Suite 212), Yreka, California 96097–1006, telephone (916) 842–5763.

SUPPLEMENTARY INFORMATION: The principal agenda items at this meeting will be: Review a final DRAFT of a restoration plan amendment which will expand the Klamath Restoration program into the upper Klamath Basin and initiate another round of public review, or, if a final DRAFT is not prepared, decide upon options to plan long-range fishery restoration in the upper Klamath Basin; decide how the Task Force can best make water allocation recommendations to the Bureau of Reclamation for the Klamath Project consistent with Klamath Restoration Act Goals; decide how carry over funds can be used for instream flow studies below Iron Gate Dam this year; consider a feasibility study to improve water quality, quantity, and timing of flows for fish habitat below Klamath River reservoirs to improve downstream fish habitat; recommend an approach to the 1995 mid term evaluation of the Klamath Restoration Program; consider an award to recognize agriculture/private lands cooperative efforts in the restoration of Klamath anadromous fish runs; review recommendations regarding minimizing the impacts of Iron Gate hatchery fish on natural stocks; review Technical Team progress towards recommended measures which may prevent listing of Klamath River Spring Chinook under the Endangered Species Act.

For background information on the Task Force, please refer to the notice of their initial meeting that appeared in the **Federal Register** on July 8, 1987 (52 FR 25639).

Dated: January 26, 1995.

Thomas Dwyer,

Acting Regional Director, U.S. Fish and Wildlife Service.

[FR Doc. 95–2538 Filed 2–1–95; 8:45 am]

BILLING CODE 4310–55–M

Bureau of Land Management

[NV–930–1430–01; N–58941]

Notice of Realty Action: Commercial Lease

AGENCY: Bureau of Land Management.

ACTION: Lease of public lands for commercial purposes.

SUMMARY: The following described public land in near Jean, Clark County, Nevada has been examined and found suitable for lease under section 302 of the Federal Land Policy and Management Act of 1976 (43 U.S.C. 1732). The land is proposed to be used as a shooting sports, educational, and safety training complex.

Mount Diablo Meridian, Nevada

Complex

T. 24 S., R. 60 E.,
Sec. 25: S½NW¼, S½.
Sec. 26: E½SE¼.
T. 24 S., R. 61 E.,
Sec. 30: E½NE¼, SE¼, S½NE¼SE¼, S½SW¼.
Sec. 36: N½.

Containing 1140 acres, more or less.

Buffer Zone

T. 24 S., R. 60 E.,
Sec. 23: SE¼SE¼
Sec. 24: S½S½.
Sec. 25: N½NW¼, NE¼.
Sec. 26: E½NE¼.
T. 24 S., R. 61 E.,
Sec. 19: S½S½.
Sec. 20: SW¼SW¼.
Sec. 29: W½W½.
Sec. 30: NW¼, W½NE¼, NW¼SW¼, N½NE¼SW¼.
Sec. 31: N½.
Sec. 32: W½NW¼.

Containing 1580 acres, more or less.

The lease is consistent with current Bureau planning for this area and would be in the public interest. The lease, when issued, will be subject to the provisions of applicable regulations of the Secretary of the Interior. Detailed information concerning this action is available for review at the office of the Bureau of Land Management, Las Vegas District, 4765 W. Vegas Drive, Las Vegas, Nevada.

Upon publication of this notice in the **Federal Register**, the above described land will be segregated from all other forms of appropriation under the public land laws, including the general mining laws, except for leasing under the mineral leasing laws and disposals under the mineral disposal laws. For a period of 45 days from the date of publication of this notice in the **Federal Register**, interested parties may submit comments to the District Manager, Las Vegas District, P. O. Box 26569, Las Vegas, Nevada 89126. Any adverse comments will be reviewed by the State Director.

In the absence of any adverse comments, the classification of the land described in this Notice will become effective 60 days from the date of publication in the **Federal Register**. The lands will not be offered for lease until after the classification becomes effective.

Dated: January 25, 1995.

Bruce Dawson,

Acting District Manager, Las Vegas, NV.

[FR Doc. 95–2517 Filed 2–1–95; 8:45 am]

BILLING CODE 4310–HC–P

Bureau of Reclamation

[FES 95–2]

Narrows Project, Utah; Availability for Final Environmental Impact Statement

AGENCY: Bureau of Reclamation, Interior.

ACTION: Notice of availability for final environmental impact statement for the Narrows Project, Sanpete County, Utah; INT–FEIS–95–2.

SUMMARY: Pursuant to the National Environmental Policy Act of 1969, as amended, the Department of the Interior, Bureau of Reclamation (Reclamation), is submitting a final environmental impact statement (FEIS) on the proposed Narrows Project. The FEIS describes and presents the environmental effects of three alternatives, including no action, for a multiple purpose water development project that would provide water for irrigation and municipal use in north Sanpete County, Utah.

ADDRESSES: Single copies of the FEIS may be requested from Reclamation's Upper Colorado Regional Office at the

following address: Regional Director, Bureau of Reclamation, Attention: Lee Swenson, UC–750, 125 South State Street, Room 6107, Salt Lake City, UT 84138–1102; telephone: (801) 524–5580.

Copies of the FEIS are available for inspection at the address above and also at the following locations:

- Office of the Commissioner, Bureau of Reclamation, Environmental and Planning Branch, 18th and C Streets NW., Room 7455, Washington, DC 20240, Telephone: (202) 343–4662
- Reclamation Service Center, Bureau of Reclamation, Library, Room 167, Building 67, Denver Federal Center, Denver, CO 80225, Telephone: (303) 236–6963.

Libraries

Copies will also be available for inspection at libraries in the project vicinity.

FOR FURTHER INFORMATION CONTACT: Lee Swenson (Regional Environmental Officer), Upper Colorado Region, (801) 524–5580.

SUPPLEMENTARY INFORMATION: Sanpete Water Conservancy District is proposing to build a multiple purpose water development project that would provide water for irrigation and municipal use. Water from the project would come from a transmountain diversion from upper Gooseberry Creek and its tributaries which are located in the Prince River drainage. Irrigation water shortages would be reduced from their present level of 30 percent to about 19 percent.

Three alternatives, including No Action, were considered in the draft statement. The two action alternatives were: (1) The proponent's Recommended Plan; and (2) Smaller Reservoir Plan. The Recommended Plan will provide to north Sanpete County an average annual supply of 4,920 acre-feet of supplemental irrigation water for 15,420 acres of presently irrigated farmland and 480 acre-feet of water for municipal use. The service area encompasses about 49,000 acres. The project plan will include construction of Narrows Dam and Reservoir on Gooseberry Creek, pipelines to deliver the water to existing water distribution systems, rehabilitation of the existing Narrows Tunnel, and relocation of 2.9 miles of State Road (SR) 264. The project will also provide recreation opportunities and fish and wildlife improvements. In addition to the two action plans and the No Action Plan, the FEIS also evaluates in less detail the impacts of several non-viable alternatives.

The principal environmental consequences that would result from the two action plans include: Increased crop production, economic stability and growth, expanded fish and wildlife resources and recreational opportunities.

Dated: January 24, 1995.

Rick L. Gold,

Deputy Regional Director.

[FR Doc. 95–2516 Filed 2–1–95; 8:45 am]

BILLING CODE 4310–94–M

National Park Service

Notice of Intent To Repatriate a Cultural Item in the Possession of the Museum of New Mexico, Santa Fe, New Mexico

AGENCY: National Park Service, Interior.

ACTION: Notice.

Notice is hereby given under provisions of the Native American Graves Protection and Repatriation Act of the intent to repatriate cultural items in the possession of the Museum of Indian Arts and Culture/Laboratory of Anthropology, a unit of the Museum of New Mexico, Santa Fe, New Mexico, that meets the definition of ''sacred object'' under Section 2 of the Act.

The item is a prayer stick used as a part of the Navajo Enemyway ceremony. The object consists of nine parts: two eagle feathers, a cedar branch, a piece of red cloth, a can of animal fat, deer hooves, and three leather pouches. The object was a gift to the Museum of new Mexico by its first director, Dr. Edgar Lee Hewett. These objects were part of a medicine bag containing approximately sixty-nine pieces, purchased by Hewett at a trading post east of the Chuska Mountains on the Navajo Reservation prior to 1935.

The Navajo Nation after consultation with traditional religious leaders, requested that the prayer stick and the associated items be repatriated. The Museum's records indicate the objects under consideration for repatriation are Navajo in origin and were, most likely used by Navajo Medicine Men during the first two decades of the 20th century.

Based on the above mentioned information, officials of the Museum of Indian Arts and Culture, a unit of the Museum of New Mexico have determined, pursuant to 25 U.S.C. 3001 (3)(C), that these items are specific ceremonial objects needed by traditional Navajo religious leaders for the practice of their religion by its present day adherents. Officials of the Museum of Indian Arts and Culture, a unit of the Museum of New Mexico have further determined, pursuant to 25 U.S.C. 3001 (2), that there is a relationship of shared group identity which can be reasonably traced between these items and the Navajo Nation.

The catalog numbered objects, 23075/12a-g and 23072/12a-b, are officially part of the collection now identified as the School of American Research Collection in the Museum of New Mexico, a loan agreement resulting from fifty years of the two institutions operating as one entity under a single Director. The School, now separate from the Museum of New Mexico, through written correspondence dated January 6, 1995 has agreed to repatriate the prayer stick and associated items.

Authorities of the United States Fish and Wildlife Service have been contacted regarding applicability of Federal endangered species statutes to this transfer and have concurred in the conclusion that the object is not covered due to its age.

This notice has been sent to officials of the Navajo Nation. Representatives of any other Indian tribe which believes itself to be culturally affiliated with these cultural items should contact Dr. Bruce Bernstein, Chief Curator, Museum of Indian Arts and Culture, Museum of New Mexico, P.O. Box 2087, Santa Fe, NM 87504, telephone: (505) 827–6344, before March 6, 1995. Repatriation of these sacred objects to the Navajo Nation may begin after that date if no additional claimants come forward.

Dated: January 26, 1995.

Francis P. McManamon,

Departmental Consulting Archeologist, Chief, Archeological Assistance Division

[FR Doc. 95–2539 Filed 2–1–95; 8:45 am]

BILLING CODE 4310–70–F

INTERNATIONAL DEVELOPMENT COOPERATION AGENCY

Agency for International Development

SES Performance Review Board

AGENCY: Agency for International Development.

ACTION: Correction to notice of membership of 1995 Senior Executive Service (SES) Performance Review Board.

SUMMARY: In the announcement notice of the SES Performance Review Board membership for 1995, the alternate members were inadvertently omitted. This notice corrects the original announcement, identified as FR Document 95–1382 (filed 1–19–95) under Section 4190 of the **Federal Register** published January 20, 1995, to add the alternate members as follows:

Scott Smith, Alternate SFS Member
Kathryn Cunningham, Alternate SES Member
Amy Billingsley, Alternate Public Member

FOR FURTHER INFORMATION CONTACT: R. Darlene DeWitt, (202) 663–1423.

Dated: January 26, 1995.

Shirley D. Renrick,

Executive Secretary, Performance Review Board.

[FR Doc. 95–2503 Filed 2–1–95; 8:45 am]

BILLING CODE 6116–01–M

DEPARTMENT OF JUSTICE

Antitrust Division

Notice Pursuant to the National Cooperative Research and Production Act of 1993—Pacific Telesis Electronic Publishing Services, Inc.

Notice is hereby given that, on September 23, 1994, pursuant to Section 6(a) of the National Cooperative Research and Production Act of 1993, 15 U.S.C. 4301 *et seq.* (''the Act''), Pacific Telesis Electronic Publishing Services, Inc. (''PTEPS'') has filed written notifications on behalf of PTEPS; Ameritech Publishing, Inc., dba Ameritech advertising services (''Aas''); Intelligent Media Ventures (''IMVI''); and NYNEX Information Resources Company (''NIRC'') simultaneously with the Attorney General and the Federal Trade Commission disclosing (1) the identities of the parties and (2) the nature and objectives of the venture. The notifications were filed for the purpose of invoking the Act's provisions limiting the recovery of antitrust plaintiffs to actual damages under specified circumstances. Pursuant to Section 6(b) of the Act, the identities of the parties are PTEPS, San Ramon, CA; Aas, Troy, MI; IMVI, Atlanta, GA; and NIRC, Middleton, MA.

The objectives of the consortium are to expand interactive electronic shopping services by eliminating duplicative effort and expense in the development, maintenance and use of interactive electronic shopping services and by making it easier for advertisers and consumers to utilize these services.

To meet these objectives, the parties will: (1) Identify and develop new technologies for interactive electronic shopping services; (2) conduct market, industry and technology research concerning interactive electronic shopping services; (3) identify opportunities to standardize systems architectures, application interfaces, database structures and software applications; (4) develop, exchange, license, and maintain common system architectures, application interfaces, database structures and software applications; (5) oversee acceptance testing of member-developed software; (6) develop and market test product prototypes; (7) provide advice to members on the use of systems and tools, systems implementation and troubleshooting; and (8) perform further acts allowed by the Act that would advance the consortium's objectives. Membership in this consortium is open to qualified entities and the consortium will file additional written notifications as changes in membership occur.

Constance K. Robinson,

Director of Operations, Antitrust Division.

[FR Doc. 95–2470 Filed 2–1–95; 8:45 am]

BILLING CODE 4410–01–M

Office of Juvenile Justice and Delinquency Prevention

[OJP (OJJDP) No. 1040]

RIN 1121–ZA05

Challenge Grants Program Guideline

AGENCY: Office of Justice Programs, Office of Juvenile Justice and Delinquency Prevention.

ACTION: Notice of proposed guideline.

SUMMARY: The Office of Juvenile Justice and Delinquency Prevention (OJJDP) is requesting public comment on the proposed application guideline for Part E Challenge Grants Program. This program is of interest to all Juvenile Justice and Delinquency Prevention Act of 1974, as amended, State formula grantees.

DATES: Comments on the proposed guideline must be received by OJJDP not later than March 6, 1995.

ADDRESSES: Office of Juvenile Justice and Delinquency Prevention, Room 742, 633 Indiana Avenue, N.W., Washington, DC 20531.

FOR FURTHER INFORMATION CONTACT: Paul Steiner, State Relations and Assistance Division, Office of Juvenile Justice and Delinquency Prevention, at the above address. Telephone (202) 307–5924.

SUPPLEMENTARY INFORMATION:

Background

Section 285 under Title II, Part E of the Juvenile Justice and Delinquency Prevention Act of 1974, as amended (42 U.S.C. 5601, *et seq.*), states that the ''Administrator may make a grant to a State that receives an allocation under section 222, in the amount of 10 percent of the amount of the allocation, for each challenge activity in which the State participates for the purpose of funding the activity.''

Part E—State Challenge Activities is a 1992 amendment to the JJDP Act. In FY 1995, Part E received its first appropriation. The purpose of Part E is to provide incentives for States participating in the Formula Grants Program to develop, adopt, and improve policies and programs in one or more of ten specified Challenge Activities. As used in this Guideline, ''State'' is defined in Section 103(7) of the Juvenile Justice and Delinquency Prevention Act of 1974, as amended (42 U.S.C. 5601, *et seq.*) (JJDP Act). ''Formula Grant'' refers to a grant to a State under Title II, Part B of the JJDP Act.

The ten Challenge Activities are defined in Part E as follows:

(A) Developing and adopting policies and programs to provide basic health, mental health, and appropriate education services, including special education, for youth in the juvenile justice system as specified in standards developed by the National Advisory Committee for Juvenile Justice and Delinquency Prevention prior to October 12, 1984.

(B) Developing and adopting policies and programs to provide access to counsel for all juveniles in the justice system to ensure that juveniles consult with counsel before waiving the right to counsel.

(C) Increasing community-based alternatives to incarceration by establishing programs (such as expanded use of probation, mediation, restitution, community service, treatment, home detention, intensive supervision, and electronic monitoring) and developing and adopting a set of objective criteria for the appropriate placement of juveniles in detention and secure confinement.

(D) Developing and adopting policies and programs to provide secure settings for the placement of violent juvenile offenders by closing down traditional training schools and replacing them with secure settings with capacities of no more than 50 violent juvenile offenders with ratios of staff to youth great enough to ensure adequate supervision and treatment.

(E) Developing and adopting policies to prohibit gender bias in placement and treatment and establishing programs to ensure that female youth have access to the full range of health and mental health services, treatment for physical or sexual assault and abuse, self defense instruction, education in parenting, education in general, and other training and vocational services.

(F) Establishing and operating, either directly or by contract or arrangement with a public agency or other appropriate private nonprofit organization (other than an agency or organization that is responsible for licensing or certifying out-of-home care services for youth), a State ombudsman office for children, youth, and families to investigate and resolve complaints relating to action, inaction, or decisions of providers of out-of-home care to children and youth (including secure detention and correctional facilities, residential care facilities, public agencies, and social service agencies) that may adversely affect the health, safety, welfare, or rights of resident children and youth.

(G) Developing and adopting policies and programs designed to remove, where appropriate, status offenders from the jurisdiction of the juvenile court to prevent the placement in secure detention facilities or secure correctional facilities of juveniles who are nonoffenders or who are charged with or who have committed offenses that would not be criminal if committed by an adult.

(H) Developing and adopting policies and programs designed to serve as alternatives to suspension and expulsion from school.

(I) Increasing aftercare services for juveniles involved in the justice system by establishing programs and developing and adopting policies to provide comprehensive health, mental health, education, and vocational services and services that preserve and strengthen the families of such juveniles.

(J) Developing and adopting policies to establish—

(i) A State administrative structure to coordinate program and fiscal policies for children who have emotional and behavioral problems and their families among the major child serving systems, including schools, social services, health services, mental health services, and the juvenile justice system; and

(ii) A statewide case review system. The term ''case review system'' means a procedure for ensuring that—

(a) Each youth has a case plan, based on the use of objective criteria for determining a youth's danger to the community or himself or herself, that is designed to achieve appropriate placement in the least restrictive and most family-like setting available in close proximity to the parents' home, consistent with the best interests and special needs of the youth;

(b) The status of each youth is reviewed periodically but not less frequently than once every 3 months, by a court or by administrative review, in order to determine the continuing necessity for and appropriateness of the placement;

(c) With respect to each youth, procedural safeguards will be applied to ensure that a dispositional hearing is held to consider the future status of each youth under State supervision, in a juvenile or family court or another court (including a tribal court) of competent jurisdiction, or by an administrative body appointed or approved by the court, not later than 12 months after the original placement of the youth and periodically thereafter during the continuation of out-of-home placement; and

(d) A youth's health, mental health, and education record is reviewed and updated periodically.

Eligible Applicants

The only eligible applicants for Part E Challenge Grants in a given fiscal year are the State Agencies, designated by the Chief Executive of the State pursuant to Section 223(a)(1) of the JJDP Act, which receive OJJDP Formula Grant awards under Section 223 of the JJDP Act for the same fiscal year.

Funding Levels

The amounts of Part E funds available for the States are determined by the ratio of Part E funds to Formula Grant funds available to the States in a given fiscal year. The same ratio is applied to each State's Formula Grant allocation to determine each eligible State's Part E allocation.

All States will be notified of Part E State allocations annually.

Part E funds not awarded by the end of the fiscal year due to the absence of an acceptable application will either be: (1) Made available to States in the subsequent fiscal year along with the Part E funds appropriated for that year, or (2) in the case of a State not participating in the Formula Grants Program, the State's Part E funds will be reserved for one year if the State submits (a) a written statement of intent to resume participation and (b) describes activities that are designed to enable the State to participate in the following fiscal year.

State Applications and Awards

Each State may apply for a Part E grant in an amount equal to the sum of not more than 10% of such State's Formula Grant allocation received, for each challenge activity in which the State chooses to participate, not to exceed the total amount of the State's Part E allocation.

For example, a State may have a Formula Grant of $600,000 and have a Part E allocation of $100,000. The State could apply for up to $60,000 (10% of the Formula Grant) for each Challenge Activity. However, since a total of $100,000 Part E funds would be available to the State, the State could apply for $60,000 for a first Challenge Activity, and $40,000 for a second Activity. Alternatively, the State could apply for more Challenge Activities by applying for any amounts of not more than $60,000 for each Activity that total not more than $100,000.

The award of Part E funds is contingent upon OJJDP's approval of an application meeting the requirements listed below.

Application Components

Applications for Part E Challenge Activity Grants must contain the following items for each proposed Challenge Activity.

1. Challenge Activity

Identification of the Challenge Activity to be implemented.

2. Statement of Need

A concise explanation of the need for Federal funding to implement the Challenge Activity.

3. Project Summary

A brief summary or abstract describing the activities, goods and services to be funded with Part E funds, as well as collateral activities to be funded from other sources.

4. Goals, Objectives and Outcomes

A listing of the goals and objectives for the project, and anticipated outcomes and products.

5. Strategy

A concise description of the steps to be taken in implementing the Challenge Activity, including a timeline for implementation. This description must link the proposed strategy with the Challenge Activity as cited in the JJDP Act.

6. State Advisory Group Involvement and Approval

A description of the State Advisory Group's (SAG) involvement in the Challenge Activity, and evidence of approval of the application by the SAG.

7. Budget

A budget and budget narrative explaining and justifying the costs of the proposed project.

Grant Period

Part E grants will be awarded for an eighteen month project period.

Use of Funds

1. The recipient State Agency shall use Part E funds to implement the proposed Challenge Activities. The State Agency may contract or enter into interagency agreements with public or private organizations, institutions, or individuals to implement Challenge Activities. Part E funds cannot be subgranted.

2. Part E funds may be used only in accordance with the provisions of Part I of the JJDP Act and the effective edition of the Office of Justice Programs Guideline M.7100.

Application Due Date

Applications for FY 1995 Challenge Grants may be submitted after publication of the final guideline and must be received by June 30, 1995. For subsequent years, applications must be received by March 31, in conjunction with the Formula Grant Multi-year Plan or Annual Plan Update. Section 223(a) of the JJDP Act requires that the Formula Grant Plan be ''amended annually to include new programs and challenge activities subsequent to State participation in part E.''

Technical Assistance

Technical Assistance to support the States' efforts in implementing the Challenge Activities Program is available from OJJDP through the same process used for requesting technical assistance for the Formula Grants program.

Other Requirements—General

The relevant administrative requirements for categorical grants contained in the effective edition of the Office of Justice Programs Guideline M.7100 apply to Part E Challenge Grant. However, Progress Reports for Challenge Grants are required semi-annually, not quarterly as indicated in M.7100.

Other Requirements—Statutory

Section 223(a)(3)(D)(ii) of the JJDP Act requires that the State Advisory Group's annual recommendations to the Chief Executive Officer and the legislature of the State include ''progress relating to challenge activities carried out pursuant to part E.''

Applications for Challenge Grants must contain an assurance that the State will comply with this provision.

Shay Bilchik,

Administrator.

Olga R. Trujillo,

General Counsel, Office of Justice Programs.

[FR Doc. 95–2579 Filed 2–1–95; 8:45 am]

BILLING CODE 4410–18–P

DEPARTMENT OF LABOR

Labor Advisory Committee for Trade Negotiations and Trade Policy; Meeting Notice

Pursuant to the provisions of the Federal Advisory Committee Act (Pub. L. 92–463 as amended), notice is hereby given of a meeting of the Labor Advisory Committee for Trade Negotiations and Trade Policy.

Date, time and place: February 15, 1995, 10:00 am–12:00 noon, Room C5310, Seminar 1–B, U.S. Department of Labor, 200 Constitution Ave., NW, Washington, D.C. 20210.

Purpose: The meeting will include a review and discussion of current issues which influence U.S. trade policy. Potential U.S. negotiating objectives and bargaining positions in current and anticipated trade negotiations will be discussed. Pursuant to section 9(B) of the Government in the Sunshine Act, 5 U.S.C. 552b(c)(9)(B), it has been determined that the meeting will be concerned with matters the disclosure of which would seriously compromise and significantly frustrate the Government's negotiating objectives or bargaining positions. Accordingly, the meeting will be closed to the public.

For further information, contact: Fernand Lavallee, Director Trade Advisory Group, Phone: (202) 219–4752.

Signed at Washington, D.C. this 27th day of January 1995.

Andrew Samet,

Acting Deputy Under Secretary International Affairs.

[FR Doc. 95–2563 Filed 2–1–95; 8:45 am]

BILLING CODE 4510–28–M

Office of the Secretary

Bureau of International Labor Affairs; U.S. National Administrative Office; North American Agreement on Labor Cooperation; Notice of Address for Hearing on Submission #940003 and Notice of Cancellation of Hearing on Submission #940004

AGENCY: Office of the Secretary, Labor.

ACTION: Notice.

SUMMARY: On January 12, 1995, the Department provided notice in the **Federal Register** of hearings, open to the public, on Submissions #940003 and #940004. The notice stated that the hearings would be held in San Antonio, Texas, on February 13, 1995, continuing if necessary on February 14, at a location to be announced.

Submission #940004 has since been withdrawn. The purpose of this notice is to provide the address for the hearing on Submission #940003 and to announce that, due to the withdrawal of the submission, the hearing on Submission #940004 is canceled.

DATES: The hearing on Submission #940003 will be held on February 13, 1995, commencing at 9:00 a.m.

ADDRESSES: The hearing will be held at the San Antonio City Council Chambers, Municipal Plaza Building, 103 Main Plaza, San Antonio, Texas 78205.

FOR FURTHER INFORMATION CONTACT: Irasema T. Garza, Secretary, U.S. National Administrative Office, Department of Labor, 200 Constitution Avenue, NW., Room C–4327, Washington, DC 20210. Telephone: (202) 501–6653 (this is not a toll-free number).

SUPPLEMENTARY INFORMATION: Please refer to the notice published in the **Federal Register** on January 12, 1995 (60 FR 2988) for supplementary information.

Signed at Washington, DC, on January 27, 1995.

Irasema T. Garza,

Secretary, U.S. National Administrative Office.

[FR Doc. 95–2562 Filed 2–1–95; 8:45 am]

BILLING CODE 4510–28–M

Employment and Training Administration

Job Training Partnership Act, Title IV, Part D, Section 451

AGENCY: Employment and Training Administration, Labor.

ACTION: Notice of availability of funds and solicitation for grant application (SGA).

SUMMARY: The U.S. Department of Labor (DOL), Employment and Training Administration (ETA), under Title IV, Part D, section 451 of the Job Training Partnership Act (JTPA) is soliciting proposals to conduct a national level multi-state program to train and employ people with disabilities. The Department anticipates that $4.1 million will be available for Program Year 1995 and intends to award between 8–10 grants. These grants will be awarded on a competitive basis. The purpose of this program is to increase the number and

quality of job opportunities for people with disabilities and assist in eliminating barriers by providing specialized training and outreach services, job development, and unsubsidized employment. This notice describes the process that eligible entities must use to apply for demonstration funds, the subject area for which application will be accepted for funding, how grantees are selected, and the responsibilities of grantees. All information required to submit a proposal is contained in this announcement. Compliance with DOL's assurances and certifications, which are described at 29 CFR Parts 33, 34, 93, 95, 96, 98, and in the Employment and Training Assurances Certifications and Special Conditions, will be required prior to the award. This package of assurances and certifications is available upon request at the address listed below.

DATES: Applications for grant awards will be accepted commencing February 2, 1995. The closing date for receipt of proposals will be March 20, 1995 at 2:00 p.m. Easter time at the address below. It is anticipated that awards will be made be July 1, 1995.

ELIGIBLE APPLICANTS: Awards under this solicitation will be made to nonprofit organizations that administer training and employment programs on a national (multi-state) level. Therefore, only applications from those organizations meeting the above requirements will be accepted. Individuals are not eligible to apply.

SUBMISSION OF PROPOSAL: An original and three (3) copies of the proposal shall be submitted. The proposal shall consist of two (2) separate and distinct parts.

Section I—*Technical Proposal* shall contain a detailed proposal that demonstrates the offeror's capabilities in accordance with the Statement of Work in Part II. No costs data or reference to costs shall be included in the Technical Proposal.

Section II—*Cost Proposal* shall contain the Standard Form(s) 424, ''Application for Federal Assistance'', and SGA ''Budget'' (Appendix A). In addition, the budget shall include on a separate page(s) a detailed cost analysis of each line item in the budget.

LATE PROPOSALS: Any proposal not reaching the designated address, by the specified time and date of delivery will not be considered, unless mailed and post marked five (5) days prior to the closing date. The term ''postmark'' means a printed, stamped or otherwise placed impression (exclusive of postage meter machine impression) that is readily identifiable without further action as having been supplied or affixed on the date of mailing by employees of the U.S. Postal Service.

HAND DELIVERED PROPOSALS: The proposal should be mailed five (5) days prior to the closing date. However, hand delivered proposals must be received by 2:00 P.M., Eastern Time, March 20, 1995 at the address noted in this solicitation. Telegraphed and/or facsimile proposals *will not* be honored. Failure to the adhere to above instruction will be a basis for a *determination of non-responsiveness.*

PERIOD OF PERFORMANCE: The period of performance will be 12 months from the date of grant execution.

OPTION TO EXTEND: Based on the availability of funds, effective program operation and the needs of the Department, grant(s) may be extended for up to three additional years.

DEFINITIONS: The term ''individual with a disability'' means any individual who has a physical or mental disability which for such individual constitutes or results in a substantial handicap to employment [JTPA, section 4(10)(A)]. The term ''placement'' shall mean entered into unsubsidized employment.

ADJUSTMENT OF FUNDING REQUEST: The Department of Labor reserves the right to award a project at level which is different than the proposal.

ADDRESSES: Application shall be mailed to: U.S. Department of Labor, Employment and Training Administration, Division of Acquisition and Assistance, Attention: Mr. David Houston, Reference: SGA/DAA 94–22, 2000 Constitution Avenue, NW, Room S–4203, Washington, DC 20210.

FOR FURTHER INFORMATION CONTACT: Mr. David Houston, Division of Acquisition and Assistance, Telephone: (202) 219–8702 (This is not a toll-free number).

Part I. Background

Over the past 15 years, ETA has awarded grants to organizations that provided employment and training and related services to people with disabilities. Currently nine programs are funded to serve people with disabilities. Authorization for these programs comes from JTPA Title IV, section 451(c)(3) in language that established ''programs which require technical expertise at the national level and which serve specialized needs of particular client groups, * * *'' People with a disability are identified as one such group.

In accordance with the designation of people with disabilities as one of the client groups requiring special assistance, ETA has supported the nine ongoing programs because they provide customized training and outreach services, job development, and job placement assistance through national organizations having special expertise in addressing the problems of those who are disabled. The ongoing national program are linked to local rehabilitation agencies and employer organizations. In addition, these programs relate to each of the major disabled conditions which constitute barriers to labor market participation such as blindness, hearing, physical impairments. The nine ongoing programs are:

A. *Goodwill Industries of America*—This project provides multi-occupational in-house training and jobs, to physically and emotionally disabled, mentally retarded, deaf, blind people, as well as other people with disabilities.

B. *America Rehabilitation Association*—This project provides on-the-job training and job placement in rehabilitation facilities to people with disabilities.

C. *Epilepsy Foundation of America*—This project provides a national outreach screening and pre-employment evaluation, support service, job-seeking skills training, job search assistance and job placement tailored to the special needs of the underemployed.

D. *Electronic Industries Foundation*—This project provides a national outreach, pre-employment counseling and job placement program and fosters new employment opportunities for people with disabilities, providing a centralized job referral service with the electronic and other industries and rehabilitation agencies.

E. *Mainstream, Inc.*—This project conducts promotional activities to encourage employers to hire people with disabilities and to provide information on workplace accommodations. It recruits and places people with disabilities through a variety of services and a computerized job bank system.

F. *Association for Retarded Citizen (The ARC)*—This project provides on-the-job training in a variety of occupations for people with mental retardation through subgrants with public and private employers.

G. *National Federation of the Blind*—This project provides an applicant registry, job announcements, counseling, job referrals and employer education seminars, and operates a job bank to promote the interests of the blind and place them in employment opportunities.

H. *International Association of Machinists*—This project provides training, supportive service and job

development for unemployed or underemployed persons with disabilities. It provides follow-up services to assure placement success and career advancement for those individuals.

I. *Marriott Foundation for People with Disabilities*—This project is a transitional school-to-work program for youth with disabilities. It provides job training and placement that enhances their current and future and future employment prospects as they prepare to leave high school.

Part II—Statement of Work

The offeror must demonstrate a thorough understanding of the purpose and objective of people with disabilities training and employment needs. Therefore, DOL/ETA, through this SGA intends to provide grants to organizations that train the disabled and place them in unsubsidized employment.

A. The proposal must include a Statement of Work that demonstrates the offeror's complete understanding of methods used to place people with disabilities into unsubsidized employment. the Statement of Work shall include, but not be limited to:

1. The number of eligible individuals the offeror will train and place into unsubsidized employment,

2. The location of the training and/or project sites (by state, county and city) and the estimated number of individuals to be trained and placed in unsubsidized employment,

3. Type of recruitment methods to be used, including organizations that will assist in the recruitment effort,

4. Evaluation tests or screening tests or screening techniques and methods that will be used to determine employment,

5. Type of recruitment methods to be used, including organizations that will assist in the recruitment effort,

6. Evaluation tests or screening tests or screening techniques and methods that will be used to determine participants needs, aptitude or occupational strength,

7. A plan for gauging customer (both employer and participant) satisfaction with services provided, and

8. Any supportive services that will be provided to participants, which will enhance their ability to obtain employment, e.g. counseling, employability planning, etc.

B. Where training (on-the-job training) is proposed, the offeror shall describe:

1. Type of occupational training to be provided, and

a. Training outlines

b. Timeframes established (not to exceed six months)

c. Measurements of the participant's progress

d. Methods to be used to determine job readiness

C. For Placement Services, the offeror shall describe:

1. Methods and strategies to be used for developing job opportunities for participating,

2. Offeror's special capabilities for establishing effective relationship with private-for-profit as well as non-profit employers what will result in the unsubsidized employment of people with disabilities,

3. Follow-up service planned, to include frequency and type of services provided, and

4. Activities related to the American with Disabilities Act.

D. *Project Performance Indicators* (Measurable Deliverables).

1. Placements. Indicate the number of trainees who will be trained and indicate those placed in unsubsidized employment upon completion of the services provided (which cannot be less than 120).

2. Average Hourly Wage. Indicate the expected hourly wage that will be received by trainees upon completion of the program.

3. Projected Performance Indicators shall be provided on a quarterly basis and for each project site.

Part III—Rating Criteria for Award

Offerors are advised that the selection of prospective grantee(s) for award is to be made after careful evaluation of proposals by a panel of specialists. Each panelist will evaluate the proposals for acceptability with emphasis on the various factors enumerated below. The evaluation criteria are as follows:

A. *Program Design* (30 points).

Proposals will be evaluated on the bases in which they reflect sound program designs and methods. Areas that will be examined include the following:

(1) The offeror's understanding of the basic aims and objectives of training and employment programs for people with disabilities including methods for gauging customer (employer and participant) satisfaction with the services provided,

(2) The appropriateness of the offeror's approaches and methods for recruiting, screening, training, placing into unsubsidized employment and providing follow-up services to people with disabilities,

(3) The total number of states and localities in which projects are to be operated and the total number of individuals to be trained and of this number indicate those placed into unsubsidized employment,

(4) The offeror's description of its current multistage training and employment delivery system for people with disabilities, and

(5) The offeror's description of its current linkages with local rehabilitation agencies and other human resources programs including JTPA Title II–A, state employment services and state vocational education agencies.

B. *Administrative Capability* (30 points).

Proposals will be evaluated based on the:

(1) Offeror's capability for managing the business aspects of a national multi-state project for people with disabilities,

(2) Timeliness of the offeror's proposed schedule for putting the program into full operation, and

(3) Offeror's institutional capabilities for working cooperatively and successfully with private employers, rehabilitation agencies and other organizations in maximizing the services to people with disabilities and improving their job prospects.

C. *Staff Capability* (15 points).

Proposals will be evaluated based upon:

(1) The duties outline for key executive, managerial, and technical positions appear appropriate to the work to be conducted under the award, and

(2) The qualifications of the persons designated for key executive, managerial, and technical positions including their experiences in administering a recent training and employment program for people with disabilities.

D. *Previous Experience* (25 points).

The proposals will be evaluated on the degree to which the offeror demonstrates that it has successfully carried out national level multi-state training and employment programs for the disabled. Applicants are advised that discussions may be necessary to clarify any inconsistences in their applications. The final decision on the award will be based on what is most advantageous to the Federal Government as determined by the ETA Grant Officer.

Part IV—Reporting Recruitment

A. *Quarterly Financial Reports* SF 269.

B. *Quarterly Progress Reports.* Offerors shall submit to the project officer an original and one copy of a quarterly progress report (not to exceed three pages) of work accomplishments during each quarter of the grant period. This report shall be in both narrative and statistical for and received not later

than 30 calendar days following the end of each quarter.

Signed at Washington, D.C. this 26th day of January, 1995.

Paul Mayrand,

Director of Special Targeted Programs.

James C. Deluca,

Grant Officer, Office of Grants and Contracting Management, Division of Acquisition and Assistance.

Attachments

(1) Application for Federal Assistance (Standard Form 424)
(2) Part II—Budget Information
(3) Financial Status Report Form (Standard Form 269)

BILLING CODE 4510–30–M

APPLICATION FOR FEDERAL ASSISTANCE

2. DATE SUBMITTED	Applicant Identifier
3. DATE RECEIVED BY STATE	State Application Identifier
4. DATE RECEIVED BY FEDERAL AGENCY	Federal Identifier

1. TYPE OF SUBMISSION:

Application	Preapplication
☐ Construction	☐ Construction
☐ Non-Construction	☐ Non-Construction

5. APPLICANT INFORMATION

Legal Name:	Organizational Unit:
Address *(give city, county, state, and zip code)*:	Name and telephone number of the person to be contacted on matters involving this application *(give area code)*

6. EMPLOYER IDENTIFICATION NUMBER (EIN): ☐☐ – ☐☐☐☐☐☐☐

7. TYPE OF APPLICANT: *(enter appropriate letter in box)* ☐

A. State
B. County
C. Municipal
D. Township
E. Interstate
F. Intermunicipal
G. Special District
H. Independent School Dist.
I. State Controlled Institution of Higher Learning
J. Private University
K. Indian Tribe
L. Individual
M. Profit Organization
N. Other (Specify): _____

8. TYPE OF APPLICATION:

☐ New ☐ Continuation ☐ Revision

If Revision, enter appropriate letter(s) in box(es): ☐ ☐

A. Increase Award B. Decrease Award C. Increase Duration
D. Decrease Duration Other *(specify)*:

_____

9. NAME OF FEDERAL AGENCY:

10. CATALOG OF FEDERAL DOMESTIC ASSISTANCE NUMBER: ☐☐.☐☐☐

TITLE:

11. DESCRIPTIVE TITLE OF APPLICANT'S PROJECT:

12. AREAS AFFECTED BY PROJECT *(cities, counties, states, etc.)*:

13. PROPOSED PROJECT:

Start Date	Ending Date

14. CONGRESSIONAL DISTRICTS OF:

a. Applicant	b. Project

15. ESTIMATED FUNDING:

a. Federal	$	.00
b. Applicant	$	.00
c. State	$	.00
d. Local	$	.00
e. Other	$	.00
f. Program Income	$	.00
g. TOTAL	$	.00

16. IS APPLICATION SUBJECT TO REVIEW BY STATE EXECUTIVE ORDER 12372 PROCESS?

a. YES. THIS PREAPPLICATION/APPLICATION WAS MADE AVAILABLE TO THE STATE EXECUTIVE ORDER 12372 PROCESS FOR REVIEW ON:

DATE_____

b NO. ☐ PROGRAM IS NOT COVERED BY E.O. 12372

☐ OR PROGRAM HAS NOT BEEN SELECTED BY STATE FOR REVIEW

17. IS THE APPLICANT DELINQUENT ON ANY FEDERAL DEBT?

☐ Yes If "Yes," attach an explanation. ☐ No

18. TO THE BEST OF MY KNOWLEDGE AND BELIEF, ALL DATA IN THIS APPLICATION/PREAPPLICATION ARE TRUE AND CORRECT, THE DOCUMENT HAS BEEN DULY AUTHORIZED BY THE GOVERNING BODY OF THE APPLICANT AND THE APPLICANT WILL COMPLY WITH THE ATTACHED ASSURANCES IF THE ASSISTANCE IS AWARDED

a. Typed Name of Authorized Representative	b. Title	c. Telephone number
d. Signature of Authorized Representative		e. Date Signed

Previous Editions Not Usable

Standard Form 424 (REV 4-88)
Prescribed by OMB Circular A-102

Authorized for Local Reproduction

INSTRUCTIONS FOR THE SF 424

This is a standard form used by applicants as a required facesheet for preapplications and applications submitted for Federal assistance. It will be used by Federal agencies to obtain applicant certification that States which have established a review and comment procedure in response to Executive Order 12372 and have selected the program to be included in their process, have been given an opportunity to review the applicant's submission.

Item:	Entry:
1.	Self-explanatory.
2.	Date application submitted to Federal agency (or State if applicable) & applicant's control number (if applicable).
3.	State use only (if applicable).
4.	If this application is to continue or revise an existing award, enter present Federal identifier number. If for a new project, leave blank.
5.	Legal name of applicant, name of primary organizational unit which will undertake the assistance activity, complete address of the applicant, and name and telephone number of the person to contact on matters related to this application.
6.	Enter Employer Identification Number (EIN) as assigned by the Internal Revenue Service.
7.	Enter the appropriate letter in the space provided.
8.	Check appropriate box and enter appropriate letter(s) in the space(s) provided: — "New" means a new assistance award. — "Continuation" means an extension for an additional funding/budget period for a project with a projected completion date. — "Revision" means any change in the Federal Government's financial obligation or contingent liability from an existing obligation.
9.	Name of Federal agency from which assistance is being requested with this application.
10.	Use the Catalog of Federal Domestic Assistance number and title of the program under which assistance is requested.
11.	Enter a brief descriptive title of the project. if more than one program is involved, you should append an explanation on a separate sheet. If appropriate (e.g., construction or real property projects), attach a map showing project location. For preapplications, use a separate sheet to provide a summary description of this project.
12.	List only the largest political entities affected (e.g., State, counties, cities).
13.	Self-explanatory.
14.	List the applicant's Congressional District and any District(s) affected by the program or project.
15.	Amount requested or to be contributed during the first funding/budget period by each contributor. Value of in-kind contributions should be included on appropriate lines as applicable. If the action will result in a dollar change to an existing award, indicate *only* the amount of the change. For decreases, enclose the amounts in parentheses. If both basic and supplemental amounts are included, show breakdown on an attached sheet. For multiple program funding, use totals and show breakdown using same categories as item 15.
16.	Applicants should contact the State Single Point of Contact (SPOC) for Federal Executive Order 12372 to determine whether the application is subject to the State intergovernmental review process.
17.	This question applies to the applicant organization, not the person who signs as the authorized representative. Categories of debt include delinquent audit disallowances, loans and taxes.
18.	To be signed by the authorized representative of the applicant. A copy of the governing body's authorization for you to sign this application as official representative must be on file in the applicant's office. (Certain Federal agencies may require that this authorization be submitted as part of the application.)

PART II - BUDGET INFORMATION

SECTION A - Budget Summary by Categories

	(A)	(B)	(C)
1. Personnel			
2. Fringe Benefits (Rate %)			
3. Travel			
4. Equipment			
5. Supplies			
6. Contractual			
7. Other			
8. Total, Direct Cost (Lines 1 through 7)			
9. Indirect Cost (Rate %)			
10. Training Cost/Stipends			
11. TOTAL Funds Requested (Lines 8 through 10)			

SECTION B - Cost Sharing/ Match Summary (if appropriate)

	(A)	(B)	(C)
1. Cash Contribution			
2. In-Kind Contribution			
3. TOTAL Cost Sharing / Match (Rate %)			

NOTE: Use Column A to record funds requested for the initial period of performance (i.e. 12 months, 18 months, etc.); Column B to record changes to Column A (i.e. requests for additional funds or line item changes; and Column C to record the totals (A plus B).

(INSTRUCTIONS ON BACK OF FORM)

INSTRUCTIONS FOR PART II - BUDGET INFORMATION

SECTION A - Budget Summary by Categories

1. *Personnel: Show salaries to be paid for project personnel.*

2. *Fringe Benefits: Indicate the rate and amount of fringe benefits.*

3. *Travel: Indicate the amount requested for staff travel. Include funds to cover at least one trip to Washington, DC for project director or designee.*

4. *Equipment: Indicate the cost of non-expendable personal property that has a useful life of more than one year with a per unit cost of $5,000 or more.*

5. *Supplies: Include the cost of consumable supplies and materials to be used during the project period.*

6. *Contractual: Show the amount to be used for (1) procurement contracts (except those which belong on other lines such as supplies and equipment); and (2) sub-contracts/grants.*

7. *Other: Indicate all direct costs not clearly covered by lines 1 through 6 above, including consultants.*

8. *Total, Direct Costs: Add lines 1 through 7.*

9. *Indirect Costs: Indicate the rate and amount of indirect costs. Please include a copy of your negotiated Indirect Cost Agreement.*

10. *Training /Stipend Cost: (If allowable)*

11. *Total Federal funds Requested: Show total of lines 8 through 10.*

SECTION B - Cost Sharing/Matching Summary

Indicate the actual rate and amount of cost sharing/matching when there is a cost sharing/matching requirement. Also include percentage of total project cost and indicate source of cost sharing/matching funds, i.e. other Federal source or other Non-Federal source.

NOTE:

PLEASE INCLUDE A DETAILED COST ANALYSIS OF EACH LINE ITEM.

FINANCIAL STATUS REPORT
(Long Form)
(Follow instructions on the back)

1. Federal Agency and Organizational Element to Which Report is Submitted	2. Federal Grant or Other Identifying Number Assigned By Federal Agency	OMB Approval No. 0348-0039	Page of pages
3. Recipient Organization (Name and complete address, including ZIP code)			
4. Employer Identification Number	5. Recipient Account Number or Identifying Number	6. Final Report ☐ Yes ☐ No	7. Basis ☐ Cash ☐ Accrual
8. Funding/Grant Period *(See Instructions)* From: (Month, Day, Year)	To: (Month, Day, Year)	9. Period Covered by this Report From: (Month, Day, Year)	To: (Month, Day, Year)

10. Transactions:	I Previously Reported	II This Period	III Cumulative
a. Total outlays			
b. Refunds, rebates, etc.			
c. Program income used in accordance with the deduction alternative			
d. Net outlays *(Line a, less the sum of lines b and c)*			
Recipient's share of net outlays, consisting of: e. Third party (in-kind) contributions			
f. Other Federal awards authorized to be used to match this award			
g. Program income used in accordance with the matching or cost sharing alternative			
h. All other recipient outlays not shown on lines e, f or g			
i. Total recipient share of net outlays *(Sum of lines e, f, g and h)*			
j. Federal share of net outlays (line d less line i)			
k. Total unliquidated obligations			
l. Recipient's share of unliquidated obligations			
m. Federal share of unliquidated obligations			
n. Total federal share (sum of lines j and m)			
o. Total federal funds authorized for this funding period			
p. Unobligated balance of federal funds *(Line o minus line n)*			
Program income, consisting of: q. Disbursed program income shown on lines c and/or g above			
r. Disbursed program income using the addition alternative			
s. Undisbursed program income			
t. Total program income realized *(Sum of lines q, r and s)*			

11. Indirect Expense				
	a. Type of Rate *(Place "X" in appropriate box)* ☐ Provisional ☐ Predetermined ☐ Final ☐ Fixed			
	b. Rate	c. Base	d. Total Amount	e. Federal Share

12. *Remarks: Attach any explanations deemed necessary or information required by Federal sponsoring agency in compliance with governing legislation.*

13. Certification: **I certify to the best of my knowledge and belief that this report is correct and complete and that all outlays and unliquidated obligations are for the purposes set forth in the award documents.**

Typed or Printed Name and Title	Telephone (Area code, number and extension)
Signature of Authorized Certifying Official	Date Report Submitted

Previous Editions not Usable Standard Form 269 (SF424) (4-88)

FINANCIAL STATUS REPORT

(Long Form)

Please type or print legibly. The following general instructions explain how to use the form itself. You may need additional information to complete certain items correctly, or to decide whether a specific item is applicable to this award. Usually, such information will be found in the Federal agency's grant regulations or in the terms and conditions of the award (e.g., how to calculate the Federal share, the permissible uses of program income, the value of in-kind contributions, etc.). You may also contact the Federal agency directly.

Item	Entry
1, 2 and 3.	Self-explanatory.
4.	Enter the employer identification number assigned by the U.S. Internal Revenue Service.
5.	Space reserved for an account number or other identifying number assigned by the recipient.
6.	Check *yes* only if this is the last report for the period shown in item 8.
7.	Self-explanatory.
8.	Unless you have received other instructions from the awarding agency, enter the beginning and ending dates of the current funding period. If this is a multi-year program, the Federal agency might require cumulative reporting through consecutive funding periods. In that case, enter the beginning and ending dates of the grant period, and in the rest of these instructions, substitute the term "grant period" for "funding period."
9.	Self-explanatory.
10.	The purpose of columns, I, II and III is to show the effect of this reporting period's transactions on cumulative financial status. The amounts entered in column I will normally be the same as those in column III of the previous report *in the same funding period.* If this is the first or only report of the funding period, leave columns I and II blank. If you need to adjust amounts entered on previous reports, footnote the column I entry on this report and attach an explanation.
10a.	Enter total gross program outlays. Include disbursements of cash realized as program income if that income will also be shown on lines 10c or 10g. Do not include program income that will be shown on lines 10r or 10s. For reports prepared on a cash basis, outlays are the sum of actual cash disbursements for direct costs for goods and services, the amount of indirect expense charged, the value of in-kind contributions applied, and the amount of cash advances payments made to subrecipients. For reports prepared on an accrual basis, outlays are the sum of actual cash disbursements for direct charges for goods and services, the amount of indirect expense incurred, the value of in-kind contributions applied, and the net increase or decrease in the amounts owed by the recipient for goods and other property received, for services performed by employees, contractors, subgrantees and other payees, and other amounts becoming owed under programs for which no current services or performances are required, such as annuities, insurance claims, and other benefit payments.
10b.	Enter any receipts related to outlays reported on the form that are being treated as a reduction of expenditure rather than income, and were not already netted out of the amount shown as outlays on line 10a.
10c.	Enter the amount of program income that was used in accordance with the deduction alternative.
Note:	Program income used in accordance with other alternatives is entered on lines q, r, and s. Recipients reporting on a cash basis should enter the amount of cash income received; on an accrual basis, enter the program income earned. Program income may or may not have been included in an application budget and/or a budget on the award document. If actual income is from a different source or is significantly different in amount, attach an explanation or use the remarks section.
10d, e, f, g, h, i and j.	Self-explanatory.
10k.	Enter the total amount of unliquidated obligations, including unliquidated obligations to subgrantees and contractors. Unliquidated obligations on a cash basis are obligations incurred, but not yet paid. On an accrual basis, they are obligations incurred, but for which an outlay has not yet been recorded. Do not include any amounts on line 10k that have been included on lines 10a and 10j. On the final report, line 10k must be zero.
10l.	Self-explanatory.
10m.	On the final report, line 10m must also be zero.
10n,	o, p, q, r, s and t. Self-explanatory.
11a.	Self-explanatory.
11b.	Enter the indirect cost rate in effect during the reporting period.
11c.	Enter the amount of the base against which the rate was applied.
11d.	Enter the total amount of indirect costs charged during the report period.
11e.	Enter the Federal share of the amount in 11d.
Note:	If more than one rate was in effect during the period shown in item 8, attach a schedule showing the bases against which the different rates were applied, the respective rates, the calendar periods they were in effect, amounts of indirect expense charged to the project, and the Federal share of indirect expense charged to the project to date.

SF 269 (Rev. 4-88) Back

[FR Doc. 95–2454 Filed 2–1–95; 8:45 am]

BILLING CODE 4510–30–C–

NATIONAL AERONAUTICS AND SPACE ADMINISTRATION

[Notice 95–015]

NASA Advisory Council (NAC), Space Science Advisory Committee (SScAC), Meeting

AGENCY: National Aeronautics and Space Administration.

ACTION: Notice of meeting.

SUMMARY: In accordance with the Federal Advisory Committee Act, Pub. L. 92–463, as amended, the National Aeronautics and Space Administration announces a forthcoming meeting of the NASA Advisory Council, Space Science Advisory Committee.

DATES: Wednesday, March 8, 1995, 8:45 a.m. to 5:30 p.m.; Thursday, March 9, 1995, 8:30 a.m. to 5:30 p.m.; and Friday, March 10, 1995, 8:30 a.m. to 3 p.m.

ADDRESSES: NASA Headquarters, Conference Room MIC 6–A&B–West, 300 E Street, SW., Washington, DC 20546.

FOR FURTHER INFORMATION CONTACT: Dr. Lawrence J. Caroff, Code SZ, National Aeronautics and Space Administration, Washington, DC 20546, 202/358–0370.

SUPPLEMENTARY INFORMATION: The meeting will be open to the public up to the capacity of the room. The agenda for the meeting is as follows:

—Overview of Office of Space Science Status
—Review of FY96 Budget
—Divisional Reports
—Subcommittee Reports
—Discussion and Writing Groups
—Briefing on the Education Programs
—Briefing on OSS Technology Needs
—Discussion of Explorer Program

It is imperative that the meeting be held on these dates to accommodate the scheduling priorities of the key participants. Visitors will be requested to sign a visitor's register.

Dated: January 30, 1995.

Timothy M. Sullivan,

Advisory Committee Management Officer.

[FR Doc. 95–2594 Filed 2–1–95; 8:45 am]

BILLING CODE 7510–01–M

[Notice 95–013]

Intent to Grant an Exclusive Patent License

AGENCY: National Aeronautics and Space Administration.

ACTION: Notice of intent to grant a patent license.

SUMMARY: NASA hereby gives notice of intent to grant Imitec, Inc., of Schenectady, New York 12301, a partially exclusive license to practice the invention protected by the U.S. Patent Application Number 08/299,172 entitled ''COPOLYIMIDES PREPARED FROM ODPA, BTDA AND 3,4′-ODA,'' which was filed on August 31, 1994, by the United States of America as represented by the Administrator of the National Aeronautics and Space Administration.

NASA hereby gives notice of intent to grant Imitec, Inc., of Schenectady, New York 12301, a partially exclusive license to practice the invention protected by the U.S. Patent Application Number 08/299,384 entitled ''SOLVENT RESISTANT COPOLYIMIDE,'' which was filed on September 1, 1994, by the United States of America as represented by the Administrator of the National Aeronautics and Space Administration.

NASA hereby gives notice of intent to grant Imitec, Inc., of Schenectady, New York 12301, a partially exclusive license to practice the invention protected by the U.S. Patent Application Number 08/299,385 entitled ''DIRECT PROCESS FOR PREPARING SEMI-CRYSTALLINE POLYIMIDES,'' which was filed on September 1, 1994, by the United States of America as represented by the Administrator of the National Aeronautics and Space Administration.

The partially exclusive license will contain appropriate terms and conditions to be negotiated in accordance with NASA Patent Licensing Regulations (14 CFR 1245). NASA will negotiate the final terms and conditions and grant the license unless, within 60 days of the date of this notice, the Director of Patent Licensing receives written objections to the grant, together with supporting documentation. The Director of Licensing will review all written responses to the notice and then recommend to the Associate General Counsel (Intellectual Property) whether to grant the license.

DATES: Comments to the notice must be received by April 3, 1995.

ADDRESSES: National Aeronautics and Space Administration, Code GP, Washington, DC 20546.

FOR FURTHER INFORMATION CONTACT: Mr. Harry Lupuloff, NASA, Director of Patent Licensing, (202) 358–2041.

Dated: January 26, 1995.

Edward A. Frankle,

General Counsel.

[FR Doc. 95–2595 Filed 2–1–95; 8:45 am]

BILLING CODE 7510–01–M

[95–014]

Intent To Grant a Partially Exclusive Patent License

AGENCY: National Aeronautics and Space Administration.

ACTION: Notice of Intent to Grant a Patent License.

SUMMARY: NASA hereby gives notice of intent to grant Rochester Gas and Electric Corporation of Rochester, New York, 14649–0001, a partially exclusive license to practice the inventions protected by the following U.S. Patents: 4,829,035 entitled ''REACTIVATION OF A TIN OXIDE-CONTAINING CATALYST,'' which was granted May 9, 1989; 4,855,274 entitled ''PROCESS FOR MAKING A NOBLE METAL ON TIN OXIDE CATALYST,'' which was granted August 8, 1989; 4,912,082 entitled ''CATALYST FOR CARBON MONOXIDE OXIDATION,'' which was granted March 27, 1990; and 4,991,181 entitled ''CATALYST FOR CARBON MONOXIDE OXIDATION,'' which was granted February 5, 1991, by the United States of America as represented by the Administrator of the National Aeronautics and Space Administration.

The partially exclusive license will contain appropriate terms and conditions to be negotiated in accordance with ''Licensing of Government Owned Inventions,'' (37 CFR 404.1 *et seq.*). NASA will negotiate the final terms and conditions and grant the license unless, within 60 days of the date of this notice, the Director of Patent Licensing receives written objections to the grant, together with supporting documentation. The Director of Licensing will review all written responses to this notice and then recommend to the Associate General Counsel (Intellectual Property) whether to grant the license.

DATES: Comments to the notice must be received by April 3, 1995.

ADDRESSES: National Aeronautics and Space Administration, Code GP, Washington, DC 20546.

FOR FURTHER INFORMATION CONTACT: Mr. Harry Lupuloff, NASA, Director of Patent Licensing, at (202) 358–2041.

Dated: January 26, 1995.

Edward A. Frankle,

General Counsel.

[FR Doc. 95–2596 Filed 2–1–95; 8:45 am]

BILLING CODE 7510–01–M

NATIONAL SCIENCE FOUNDATION

Special Emphasis Panel in Advanced Scientific Computing; Meeting

In accordance with the Federal Advisory Committee Act (Pub. L. 92–463, as amended), the National Science Foundation announces the following meeting:

Name: Special Emphasis Panel in Advanced Scientific Computing.

Date and Time: February 22, 1995; 8:30 a.m. to 5:00 p.m.

Place: Room 1150, 4201 Wilson Blvd., Arlington, VA.

Type of Meeting: Closed.

Contact Person: Dr. Richard S. Hirsh, Deputy Division Director, Advanced Scientific Computing, Room 1122, National Science Foundation, 4201 Wilson Blvd., Arlington, VA 22230. Telephone: (703) 306–1970.

Purpose of Meeting: To provide advice and recommendations concerning proposals submitted to NSF for financial support.

Agenda: To review and evaluate Faculty Early Career Development (CAREER) Program proposals as part of the selection process for awards.

Reason for Closing: The proposals being reviewed include information of a proprietary or confidental nature, including technical information; financial data, such as salaries; and personal information concerning individuals associated with the proposals. These matters are exempt under 5 U.S.C. 552b(c) (4) and (6) of the Government in the Sunshine Act.

Dated: January 30, 1995.

M. Rebecca Winkler,

Committee Management Officer.

[FR Doc. 95–2599 Filed 2–1–95; 8:45 am]

BILLING CODE 7555–01–M

Special Emphasis Panel in Biological Sciences; Meeting

In accordance with the Federal Advisory Committee Act (Pub. L. 92–463, as amended), the National Science Foundation announces the following meeting:

Name: Special Emphasis Panel in Biological Sciences (1754).

Date and Time: February 24, 1995 from 8:30am–6:00 pm.

Place: Room 360, National Science Foundation, 4201 Wilson Boulevard, Arlington, VA.

Type of Meeting: Closed.

Contact Person: Dr. Gerald Seller, Program Director, Division of Biological Instrumentation and Resources (BIR), Room 615, National Science Foundation, 4201 Wilson Blvd., Arlington, 22230, Tel: (703) 306–1469.

Purpose of Meeting: To provide advice and recommendations concerning proposals submitted to the NSF.

Agenda: To review and evaluate proposals submitted in response to the Macromolecular Structure Database proposal solicitation.

Reason for Closing: The proposals being reviewed include information of a proprietary or confidential nature, including technical information, financial data, such as salaries; and personal information concerning individuals associated with the proposals. These matters are within exemptions (4) and (6) of 5 U.S.C. 552b(c), the Government in the Sunshine Act.

Dated: January 30, 1995.

M. Rebecca Winkler,

Committee Management Officer.

[FR Doc. 95–2600 Filed 2–1–95; 8:45 am]

BILLING CODE 7555–01–M

Special Emphasis Panel in Electrical and Communications Systems; Meeting in accordance With the Federal Advisory Committee Act Pub. L. 92–463, as Amended), the National Science Foundation Announces the Following Meeting

Name: Special Emphasis Panel in Electrical and Communications Systems (1196).

Date and Time: February 16–17, 1995.

Place: National Science Foundation, 4201 Wilson Boulevard, Room 1005, and Room 680, Arlington, Virginia.

Type of Meeting: Closed.

Contact Person: Dr. Chen-Ching Liu, Program Director, Power Systems, Division of Electrical and Communications Systems Room 675, National Science Foundation, 4201 Wilson Blvd., Arlington, VA 22230 703/306–1339.

Purpose of Meeting: To provide advice and recommendations concerning proposals submitted to NSF for financial support.

Agenda: To review and evaluate Sensors & Sensor Systems for Power Systems and Other Dispersed Civil Infrastructure Systems Concept Papers as part of the selection process for awards.

Reason for Closing: The proposals being reviewed include information of a proprietary confidential nature, including technical information; financial data, such as salaries; and personal information concerning individuals associated with the proposals. These matters are exempt under 5 U.S.C. 552b(c) (4) and (6) of the Government Sunshine Act.

Dated: January 30, 1995.

M. Rebecca Winkler,

Committee Management Officer.

[FR Doc. 95–2601 Filed 2–1–95; 8:45 am]

BILLING CODE 7555–01–M

Special Emphasis Panel in Human Resource Development; Meeting

In accordance with the Federal Advisory Committee Act (Pub. L. 92–463, as amended), the National Science Foundation announces the following meeting.

Name and Committee Code: Special Emphasis Panel in Human Resource Development (#1199).

Date and Time: February 21–22, 1995—8:30 am–5:00 pm.

Place: National Science Foundation, 4201 Wilson Blvd., Room 360, Arlington, VA 22230.

Type of Meeting: Closed.

Contact Person: William McHenry, National Science Foundation, 4201 Wilson Boulevard, Arlington, VA 22230. Telephone: (703) 306–1632.

Purpose of Meeting: To provide advice and recommendations concerning proposals submitted to NSF for financial support.

Agenda: To review and evaluate Alliances for Minority Participation proposals as part of the selection process for awards.

Reason for Closing: The proposals being reviewed include information of a proprietary or confidential nature, including technical information; financial data, such as salaries; and personal information concerning individuals associated with the proposals. These matters are exempt under 5 U.S.C. 552b(c), (4) and (6) of the Government in the Sunshine Act.

Dated: January 30, 1995.

M. Rebecca Winkler,

Committee Management Officer.

[FR Doc. 95–2602 Filed 2–1–95; 8:45 am]

BILLING CODE 7555–01–M

Special Emphasis Panel in Mathematical Sciences; Meeting

In accordance with the Federal Advisory Committee Act (Pub. L. 92–463, as amended), the National Science Foundation announces the following meeting.

Name: Special Emphasis Panel in Mathematical Sciences (1204).

Date and Time: February 21–23, 1995; 8:30 A.M. til 5:00 P.M.

Place: National Science Foundation, 4201 Wilson Boulevard, Room 310, Arlington, VA 22230.

Type of Meeting: Closed.

Contact Person: Dr. Alvin Thaler, National Science Foundation, 4201 Wilson Boulevard, Arlington, VA 22230; telephone: (703) 306–1880.

Purpose of Meeting: To provide advice and recommendations concerning proposals submitted to National Science Foundation for financial support.

Agenda: To review and evaluate proposals concerning the Faculty Early Career Development (CAREER) Program, as part of the selection process for awards.

Reason for Closing: The proposals being reviewed include information of a proprietary or confidential nature, including technical information; financial data, such as salaries; and personal information concerning individuals associated with the proposals. These matters are exempt under 5 U.S.C. 552b(c), (4) and (6) of the Government in the Sunshine Act.

Dated: January 30, 1995.

M. Rebecca Winkler,

Committee Management Officer.

[FR Doc. 95–2603 Filed 2–1–95; 8:45 am]

BILLING CODE 7555–01–M

Special Emphasis Panel in Systemic Reform; Meeting

In accordance with the Federal Advisory Committee Act (Public Law 92–463, as amended), the National Science Foundation announces the following meeting:

Name: Special Emphasis Panel in Systemic Reform.

Dates: February 16–17, 1995.

Times: 12:00 noon–6:30 p.m.; February 16, 1995;
8:00 a.m.–12:00 noon; February 17, 1995.

Place: Doubletree Hotel, 300 Army Navy Drive, Arlington, Virginia 22202, (703) 416–4100, FAX (703) 416–4126.

Type of Meeting: Closed.

Contact: Dr. Richard J. Anderson, Senior Project Director, Experimental Program to Stimulate Competitive Research, Office of Systemic Reform, National Science Foundation, Suite 875, 4201 Wilson Blvd., Arlington, VA 22230, (703) 306–1683.

Purpose of Meeting: To provide advice and recommendations concerning proposals submitted to the NSF EPSCoR program for financial support.

Agenda: To review and evaluate proposals from states participating in the Experimental Program to Stimulate Competitive Research. Proposals requesting one-year Experimental Systemic Initiative grants are submitted in response to NSF EPSCoR solicitation 94–55.

Reason for Closing: The proposals being reviewed include information of a proprietary or confidential nature, including technical information; financial data, such as salaries; and personal information concerning individuals associated with the proposals. These matters are exempt under 5 U.S.C. 522 b. (c) (4) and (6) of the Government in the Sunshine Act.

Dated: January 30, 1995.

M. Rebecca Winkler,

Committee Management Officer.

[FR Doc. 95–2604 Filed 2–1–95; 8:45 am]

BILLING CODE 7555–01–M

NUCLEAR REGULATORY COMMISSION

Documents Containing Reporting or Recordkeeping Requirements: Office of Management and Budget (OMB) Review

AGENCY: Nuclear Regulatory Commission.

ACTION: Notice of the OMB review of information collection.

SUMMARY: The Nuclear Regulatory Commission has recently submitted to OMB for review the following proposal for collection of information under the provisions of the Paperwork Reduction Act (44 U.S.C. Chapter 35).

1. Type of submission, new, or extension: New.

2. The title of the information collection: Policy Statements, ''Criteria for Guidance of States and NRC in Discontinuance of NRC Regulatory Authority and Assumption Thereof By States Through Agreement'' (46 FR 7540; January 23, 1981, as amended by policy statements published at 46 FR 36969, July 16, 1981, and 48 FR 33376, July 21, 1983) and ''NRC Review of Agreement State Radiation Control Programs: Final General Statement of Policy'' (57 FR 22495, May 28, 1992); and Comprehensive and Update questionnaires, Evaluation of Agreement State Radiation Control Programs.

3. The form number if applicable: Not applicable.

4. How often the collection is required: Policy Statements: As needed. Questionnaires: Initially for review of a State's request to become an Agreement State Program and biennial thereafter.

5. Who will be required or asked to report: Any State receiving Agreement State status by signing Section 274(b) agreement with NRC. Presently there are 29 Agreement States. Because a few of the States have more than one program, there are 34 programs in all.

6. An estimate of the number of responses: New Agreement States: Approximately one response every three years; Existing Agreement States: Approximately one-half (17) of continuing Agreement State programs are asked to respond annually.

7. An estimate of the total number of hours needed annually to complete the requirement or request: For continuing Agreement State programs, approximately 211,680 hours would be expended, or an average of 6,226 hours per program; for a new Agreement State program, approximately 3,600 hours would be expended each year over a three year period; therefore, approximately a total of 215,280 hours would be expended annually.

8. An indication of whether Section 3504(h) Pub. L. 96–511 applies: Not applicable.

9. Abstract: Agreement States are requested to provide information concerning their materials regulatory programs in their States. This information is used by the Commission to carry out its reviews of State radiation control programs to ensure that these programs are compatible with the Commission's, meet the applicable parts of Section 274 of the Atomic Energy Act, and are adequate to protect the public health and safety.

Copies of the submittal may be inspected or obtained for a fee from the NRC Public Document Room, 2120 L Street, NW (Lower Level), Washington, D.C. 20037.

Comments and questions should be directed to the OMB Reviewer: Troy Hillier, Office of Information and Regulatory Affairs (3150–NEOB–10202, Office of Management and Budget, Washington, DC 20503.

Comments may also be communicated by telephone at (202) 395–3084.

The NRC Clearance Officer is Brenda J. Shelton, (301) 415–7233.

Dated at Rockville, Maryland this 28th day of January, 1995.

For the Nuclear Regulatory Commission.

Gerald S. Cranford,

Designated Senior Official for Information Resources Management.

[FR Doc. 95–2576 Filed 2–1–95; 8:45 am]

BILLING CODE 7590–01–M

[Docket No. 50–325]

Carolina Power & Light Company; Brunswick Steam Electric Plant, Unit 1 Environmental Assessment and Finding of No Significant Impact

The U.S. Nuclear Regulatory Commission (the Commission) is considering issuance of an one/time Exemption from the requirements of Section III.D.1.(a) of Appendix J to 10 CFR Part 50 for Facility Operating License No. DPR–71 issued to the Carolina Power & Light Company (the licensee) for operation of the Brunswick Steam Electric Plant, Unit 1 (BSEP–1), located in Brunswick County, North Carolina.

Environmental Assessment

Identification of the Proposed Action

The proposed action would grant a one-time partial Exemption from the schedular requirement in Section III.D.1.(a) of Appendix J to 10 CFR Part 50, which requires a set of 3 Type A containment integrated leak rate tests to be performed at approximately equal intervals during each 10-year service period. The third test of the set shall be conducted when the plant is shutdown for the 10-year plant inservice inspections. The proposed action would extend the second 10-year period for the performance of the third Type A test at BSEP–1 until the reload 10 outage (B110R1) in September 1996.

The proposed action is in accordance with the licensee's application for Exemption dated November 22, 1994.

The Need for the Proposed Action

During the first 10-year service period, Type A tests were conducted as required by 10 CFR Part 50, Appendix J. Since the first 10-year service period for BSEP–1 was not aligned with the service period for BSEP–2, the licensee moved the end date for the BSEP–1 back to coincide with the BEEP–2 end date.

Therefore, the second 10-year service period for BEEP–1 began on July 10, 1986. This caused the first BEEP–1 Type A test for the second period to be performed in May 1987, only 11 months into the interval. The second Type A test on BEEP–1 was performed within the 40-month plus or minus 10-month interval required by the Technical Specifications.

However, BEEP–1, experienced an extended shutdown between April 1992 and February 1994. The licensee notified the NRC in a letter dated August 5, 1994, that the second 10-year period end date was being extended by one year due to this outage. Because of this shutdown, the licensee also rescheduled the remaining two BEEP–1 refueling outages (reloads 9 and 10) during the second 10-year service period. The reload 9 outage was rescheduled to begin in April 1995, and the reload 10 outage was rescheduled to begin in September 1996.

Unlike Section XI, IWA–2400(c) of the American Society of Mechanical Engineers Boiler and Pressure Vessel Code (ASME Code), Appendix J to 10 CFR Part 50 does not contain any provisions for adjusting the 10-year service period due to extended outages. The licensee has already performed two of the Type A tests at BEEP–1 required during the second 10-year service period. If a Type A test is conducted during the next refueling outage, Appendix J could be interpreted to require a fourth test to satisfy the requirement that the final test of the set be conducted when the plant is shutdown for the 10-year plant inservice inspection. Due to the extension of the inservice inspection period, the final refueling outage of the current inservice inspection period is scheduled for September 1996.

Granting of the proposed Exemption would result in an interval of approximately 68 months between the second and third Type A tests. The proposed Exemption would allow the start of the next Type A test interval to be realigned with the start of the third 10-year inservice inspection period. The Exemption would also minimize the radiation exposure to the personnel conducting the test through the elimination of a fourth test.

Environmental Impacts of the Proposed Action

The Commission has completed its evaluation of the proposed action and concludes that granting the proposed Exemption would not significantly increase the probability or amount of expected containment leakage and that containment integrity would be maintained. The licensee has reviewed the potential primary containment degradation mechanisms, including both activity-based and time-based causes. This review concluded that there has not been any alteration or challenge to the primary containment since the last Type A test. The licensee also stated that there will not be any future maintenance activity during the proposed interval extension that would adversely affect the primary containment leakage rate without administrative control requiring the performance of local leak rate testing. There are also no scheduled modifications that have the potential to adversely affect the integrity of the primary containment boundary.

The change will not increase the probability or consequences of accidents, no changes are being made in the types of any effluents that may be released offsite, and there is no significant increase in the allowable individual or cumulative occupational radiation exposure. Accordingly, the Commission concludes that there are no significant radiological environmental impacts associated with the proposed action.

With regard to potential nonradiological impacts, the proposed action does involve features located entirely within the restricted area as defined in 10 CFR Part 20. It does not affect nonradiological plant effluents and has no other environmental impact. Accordingly, the Commission concludes that there are no significant nonradiological environmental impacts associated with the proposed action.

Alternatives to the Proposed Action

Since the Commission has concluded there is no measurable environmental impact associated with the proposed action, any alternatives with equal or greater environmental impact need not be evaluated. The principal alternative to the action would be to deny the request. Such action would not enhance the protection of the environment and would result in unjustified cost to the licensee and additional exposure to plant personnel.

Alternative Use of Resources

This action does not involve the use of any resources not previously considered in the Final Environmental Statement for the Brunswick Stream Electric Plant, Units 1 and 2, dated January 1974.

Agencies and Persons Consulted

In accordance with its stated policy, the NRC staff consulted with the State of North Carolina official regarding the environmental impact of the proposed action. The State official had no comments.

Finding of No Significant Impact

Based upon the environmental assessment, the Commission concludes that the proposed action will not have a significant effect on the quality of the human environment. Accordingly, the Commission has determined not to prepare an environmental impact statement for the proposed action.

For further details with respect to the proposed action, see the licensee's letter dated November 22, 1994, which is available for public inspection at the Commission's Public Document Room, The Gelman Building, 2120 L Street, NW., Washington, DC 20555 and at the Local Public Document Room located at the University of North Carolina at Wilmington, William Madison Randall Library, 601 S. College Road, Wilmington, North Carolina 28403–3297.

Dated at Rockville, Maryland, this 26th day of January 1995.

For the Nuclear Regulatory Commission.

William H. Bateman,

Director, Project Directorate II–1, Division of Reactor Projects—I/II, Office of Nuclear Reactor Regulation.

[FR Doc. 95–2573 Filed 2–1–95; 8:45 am]

BILLING CODE 7590–01–M

[Docket No. 50–313]

Entergy Operations, Inc.; Arkansas Nuclear One, Unit No. 1 Environmental Assessment and Finding of No Significant Impact

The U.S. Nuclear Regulatory Commission (the Commission) is considering issuance of an exemption from Facility Operating License No. DPR–51, issued to Entergy Operations, Inc., (the licensee), for operation of the Arkansas Nuclear One, Unit No. 1 (ANO–1), located in Pope County, Arkansas.

Environmental Assessment

Identification of the Proposed Action

Section III.D.1(a) of Appendix J to 10 CFR Part 50 addresses requirements for periodic containment building integrated leakage rate tests (ILRTs). The tests measure the ability of the containment building to isolate the containment building atmosphere from the environment. The containment building is designed to prevent radioactive releases to the environment from the reactor and radioactive systems located inside the containment.

Appendix J requires ILRTs to be performed at approximately equal intervals during each 10-year service period. The third test of each set must be conducted when the plant is shut down for the 10-year plant inservice inspections. In order to schedule the next ILRT (the third ILRT of this service period) such that it coincides with the 10-year inservice inspections, the licensee has requested a one-time exemption from the Appendix J requirements. The exemption would extend the 10-year service period by one refueling outage to permit the licensee to perform the next ILRT together with the 10-year inservice inspection that are scheduled during the thirteenth refueling outage in 1996.

The proposed action is in accordance with the licensee's application for exemption dated November 8, 1994.

The Need for the Proposed Action

If performed during the thirteenth refueling outage, the third ILRT will not be completed until after the end of the current 10-year service period. To comply with regulations as written, an ILRT would be required during the twelfth refueling outage in 1995 to satisfy the requirement for three ILRT's during the 10-year service period and another ILRT would be required during the thirteenth refueling outage in 1996 to satisfy the requirement for the third ILRT to be performed when the plant is shut down for the 10-year inservice inspection. Without the requested exemption and related technical specification changes, the licensee would be required to perform ILRT's during both the twelfth and thirteenth refueling outages. A requirement to perform ILRT's during two consecutive refuelings is clearly beyond the intent of the regulations and given the satisfactory results of previous tests at ANO–1, there is little, if anything, to gain from two closely spaced tests.

Environmental Impacts of the Proposed Action

The Commission has completed its evaluation of the proposed action and concludes that granting of the one-time relief does not impact the environment. Six previous ILRT's performed at approximately three year intervals have not identified containment leakage concerns. An interval extension of one refueling outage (approximately 18 months) between the sixth and seventh ILRT is not likely to result in unidentified containment leakage during plant operations. There is minimal concern that the ILRT interval extension would increase the release of radioactive materials during normal operations or after an accident.

The change will not increase the probability or consequences of accidents, no changes are being made in the types of any effluents that may be released offsite, and there is no significant increase in the allowable individual or cumulative occupational radiation exposure. Accordingly, the Commission concludes that there are no significant radiological environmental impacts associated with the proposed action.

With regard to potential nonradiological impacts, the proposed action does involve features located entirely within the restricted area as defined in 10 CFR Part 20. It does not affect nonradiological plant effluents and has no other environmental impact. Accordingly, the Commission concludes that there are no significant nonradiological environmental impacts associated with the proposed action.

Alternatives to the Proposed Action

Since the Commission has concluded there is no measurable environmental impact associated with the proposed action, any alternatives with equal or greater environmental impact need not be evaluated. The principal alternative to the action would be to deny the request. Such action would not significantly reduce the environmental impact of plant operation and would result in lost electrical generation capacity and other expenses to the licensee.

Alternative Use of Resources

This action does not involve the use of any resources not previously considered in the Final Environmental Statement for the Arkansas Nuclear One, Unit No. 1.

Agencies and Persons Consulted

In accordance with its stated policy, the staff consulted with the State of Arkansas regarding the environmental impact of the proposed action. The State official had no comments.

Finding of No Significant Impact

Based upon the environmental assessment, the Commission concludes that the proposed action will not have a significant effect on the quality of the human environment. Accordingly, the Commission has determined not to prepare an environmental impact statement for the proposed action.

For further details with respect to the proposed action, see the licensee's letter dated November 8, 1994, which is available for public inspection at the Commission's Public Document Room, The Gelman Building, 2120 L Street NW., Washington, DC, and at the local public document room located at the Tomlinson Library, Arkansas Tech University, Russellville, Arkansas 72801.

Dated at Rockville, Maryland, this 27th day of January 1995.

For the Nuclear Regulatory Commission.

George Kalman,

Senior Project Manager, Project Directorate IV–1, Division of Reactor Projects III/IV, Office of Nuclear Reactor Regulation.

[FR Doc. 95–2575 Filed 2–1–95; 8:45 am]

BILLING CODE 7590–01–M

Notice of Issuance of Amendment to Facility Operating License, Correction

This notice corrects the notice issued in the Bi-Weekly Notices of Applications and Amendments to Facility Operating Licenses Involving No Significant Hazards Consideration for Illinois Power Company and Soyland Power Cooperative, Inc., on November 23, 1994 (59 FR 60392). The correct notice follows as Amendment No. 94 issued and effective on November 3, 1994:

The amendment modifies Technical Specification (TS) 3/4.3.1, ''Reactor Protection System Instrumentation,'' TS 3/4.3.2, ''Containment and Reactor Vessel Isolation Control System,'' TS 3/4.3.3, ''Emergency Core Cooling System Actuation Instrumentation,'' TS 3/4.3.4.2, ''End-of-Cycle Recirculation Pump Trip System Instrumentation,'' TS 3/4.3.5, ''Reactor Core Isolation Cooling System Actuation Instrumentation,'' TS 3/4.4.2.1, ''Safety/Relief Valves,'' and TS 3/4.4.2.2, ''Safety/Relief Valves Low-Low Set Functions.'' These TS contain requirements to perform manual testing of the associated solid state logic at least once every four fuel cycles on a staggered basis. This testing is in addition to the automatic testing performed by the self-test system. This amendment removes the requirement to perform manual testing of the solid state logic when the automatic testing is already performed.

Dated at Rockville, Maryland, this 26th day of January 1995.

For the Nuclear Regulatory Commission.

Jack W. Roe,

Director, Division of Reactor Projects—III/IV, Office of Nuclear Reactor Regulation.

[FR Doc. 95–2574 Filed 2–1–95; 8:45 am]

BILLING CODE 7590–01–M

State of Utah; Agreement Pursuant to Section 274 of the Atomic Energy Act, as Amended; Issuance of Director's Decision Under 10 CFR 2.206

Notice is hereby given that the Director, Office of State Programs, has issued a decision concerning a Petition dated September 21, 1992, submitted by US Ecology, Inc. regarding the State of Utah Agreement State program. The Petition requested that the U.S. Nuclear Regulatory Commission (NRC) revoke or suspend the State of Utah's Agreement State program for failure to require Federal or State land ownership at the Envirocare of Utah, Inc. low-level radioactive waste (LLRW) disposal facility. Petitioner alleged that: Under both Utah's Agreement State program and the Federal LLRW regulatory program, LLRW may not be disposed of on privately-owned land unless the State in which the site is located or the Federal government has formally expressed a willingness to accept title to the facility at site closure; the Envirocare site is located on privately-owned land; and neither Utah nor the U.S. Department of Energy has agreed to or expressed any willingness to accept title to the site.

By letter dated October 26, 1992, the NRC staff acknowledged receipt of the Petition and notified the Petitioner that this matter would be considered pursuant to 10 CFR 2.206. The NRC staff published a notice of receipt of the Petition in the **Federal Register** on November 13, 1992 (57 (FR 53941).

The Director of the Office of State Programs has denied the Petition. The reasons for this decision are explained in a Director's Decision Under 10 CFR 2.206 (DD–95–01), which is available for public inspection in the Commission's Public Document Room located at 2120 L Street, NW. (Lower Level), Washington, DC 20555.

A copy of this Decision will be filed with the Secretary of the Commission for the Commission's review in accordance with 10 CFR 2.206. As provided by this regulation, the Decision will constitute the final action of the Commission 25 days after the date of issuance of the Decision unless the Commission on its own motion institutes a review of the Decision within that time.

Dated at Rockville, Maryland, this 26th day of January, 1995.

For the Nuclear Regulatory Commission.

Richard L. Bangart,

Director, Office of State Programs.

I. Introduction

By a letter dated September 21, 1992, and supplemented in a letter of December 8, 1992, to James M. Taylor, Executive Director for Operations of the U.S. Nuclear Regulatory Commission (NRC or Commission), US Ecology, Inc. (petitioner) filed a ''Petition of US Ecology, Inc. for Review and Suspension or Revocation of Utah's Agreement State Program for Failure to Require State or Federal Site Ownership at the Envirocare of Utah, Inc. Low-Level Radioactive Waste Facility.'' Petitioner alleges that—

(1) Under both Utah's Agreement State program and the Federal low-level radioactive waste (LLRW) regulatory program, LLRW may not be disposed of on privately owned land unless the State in which the site is located or the Federal Government has formally expressed a willingness to accept title to the facility at site closure;

(2) The Envirocare site is located on privately owned land; and

(3) Neither Utah nor the U.S. Department of Energy has agreed to or expressed any willingness to accept title to the site.

The petitioner requested that in view of these allegations the NRC initiate appropriate proceedings, including relevant hearings, to suspend or revoke Utah's Agreement State status under Section 274j. of the Atomic Energy Act of 1954, as amended (AEA). The receipt of this Petition was noticed in the **Federal Register** on November 13, 1992 (57 Fed. Reg. 53941). For the reasons set forth below, petitioner's request is denied.

II. Background

Section 274 of the AEA, as amended, provides the statutory basis under which the NRC can relinquish portions of its regulatory authority to the States. This makes it possible for States to license and regulate the possession and use of byproduct material, source material, and special nuclear material in quantities not sufficient to form a critical mass.

The mechanism for the transfer of NRC authority to a State to regulate the radiological health and safety aspects of nuclear materials is an agreement between the Governor of the State and the Commission. Before entering into such an agreement, the Governor is required to certify that the State has a regulatory program that is adequate to protect the public health and safety. In addition, the Commission, by statute, must perform an independent evaluation and make a finding that the State's radiation control program is compatible with the NRC's, complies with the applicable parts of Section 274 of the AEA, and is adequate to protect the public health and safety.

The AEA was amended in 1978 to require, among other things, that the NRC periodically review Agreement State programs to determine the adequacy of the program to protect the public health and safety and compatibility with NRC's regulatory program. Section 274j. of the AEA provides that the NRC may suspend or terminate its agreement with a State if the Commission finds that such suspension or termination is necessary to protect the public health and safety. As mandated by the AEA, NRC conducts periodic, on site, in-depth reviews of each Agreement State program. The results of these reviews are documented in a report to the State. The report indicates whether the State's program is adequate to protect the public health and safety and also whether the program is compatible with NRC's regulatory program. (In some cases, the State is informed that the findings on adequacy and compatibility are being withheld pending further review by NRC and the resolution of outstanding issues.)

The State of Utah originally became an Agreement State on April 1, 1984. At that time, the State chose not to include authority for commercial LLRW disposal in the Agreement. However, on July 17, 1989, Governor Norman H. Bangerter of Utah requested that the Commission amend the Agreement to provide authority for Utah to regulate commercial LLRW disposal. As part of the amendment process, the Governor certified that the State had a program for control of radiation hazards with respect to LLRW disposal that is adequate to protect the public health and safety. The NRC conducted an independent review of this program and determined that the State met the requirements of Section 274 of the AEA and that the State's statutes, regulations, personnel, licensing, inspection and administrative procedures were compatible with those required by the Commission and were adequate to protect the public health and safety. The amendment to the Utah Agreement became effective on May 9, 1990. 55 FR 22113 (May 31, 1990).

Part of the State's program involved the adoption of regulations compatible with the NRC regulations for the licensing of land disposal of radioactive waste (10 CFR Part 61), including § 61.59 (Institutional requirements). Section 61.59 states:

(a) Land ownership. Disposal of radioactive waste received from other persons may be permitted only on land owned in fee by the Federal or a State government.

As part of its regulation of LLRW, Utah also adopted a provision similar to

the exemption provision at 10 CFR 61.6, which states:

The Commission may, upon application by any interested person, or upon its own initiative, grant any exemption from the requirements of the regulations in this part as it determines is authorized by law, will not endanger life or property or the common defense and security, and is otherwise in the public interest.

In September 1990, Envirocare of Utah, Inc. (Envirocare) requested the State to amend its license to authorize receipt of LLRW for disposal. On March 21, 1991, Utah granted the request authorizing LLRW disposal. In granting this authorization, the State extended a previously-granted exemption from the State's land ownership requirements for Naturally Occurring Radioactive Material (NORM) and Naturally-Occurring and Accelerator-Produced Radioactive Material (NARM) disposal to LLRW disposal at the Envirocare facility. (NORM and NARM are outside the NRC's regulatory authority.) Utah issued the exemption pursuant to its regulations, which provide that the State may grant ''such exemptions or exceptions from the requirements of these regulations as it determines are authorized by law and will not result in undue hazard to public health and safety or property.''

On September 21, 1992, US Ecology, Inc. filed this petition with the NRC requesting that the Commission revoke or suspend the Utah agreement program for regulating the commercial disposal of LLRW because of Utah's failure to require State or Federal government land ownership. The petitioner requested the NRC to review the adequacy and compatibility of Utah's Agreement State program in light of this failure and alleged that the State had not adequately justified the granting of an exemption from the land ownership requirement.[1] In a letter of October 26, 1992 acknowledging receipt of the petition, Mr. Carlton Kammerer, Director, Office of State Programs, informed the petitioner that the NRC staff was in the process of reviewing the licensing action of Utah as it related to the granting of the exemption in the course of NRC's periodic review of the Utah Agreement State program pursuant to Section 274j. of the AEA. Furthermore, the NRC staff's review of the Utah program would of necessity address the issues raised in the US Ecology petition. As will be set forth in greater detail below, the NRC has determined that the State of Utah's rationale of exercising effective control of the waste disposal site without State or Federal ownership is not unreasonable and would not warrant revocation or suspension of the Utah agreement.

III. Discussion

The NRC staff has examined the petitioner's claim in the original petition of September 21, 1992 and the supplement dated December 8, 1992:

Petitioner requests that the NRC begin proceedings to revoke or suspend Utah's Agreement State status under section 274 of the Atomic Energy Act because of alleged flaws in Utah actions on the licensing of Envirocare of Utah, Inc., to receive LLRW for disposal.

Pursuant to Section 274 of the AEA, NRC relinquished its regulatory authority over the licensing of LLRW to Utah and therefore has no direct authority over licensing of LLRW facilities in Utah. However, NRC does have authority to terminate or suspend Utah's Agreement State program under Section 274j. of the AEA. Section 274j. states:

The Commission, upon its own initiative after reasonable notice and opportunity for hearing to the State with which an agreement under subsection b. [of this section] has become effective, or upon request of the Governor of such State, may terminate or suspend all or part of its agreement with the State and reassert the licensing and regulatory authority vested in it under this Act, if the Commission finds that (1) Such termination or suspension is required to protect the public health and safety, or (2) the State has not complied with one or more of the requirements of this section. The Commission shall periodically review such agreements and actions taken by the States under the agreements to insure [sic] compliance with the provisions of this section.[2]

Based upon these periodic reviews, or upon special reviews conducted for cause, the Commission must find that (1) Termination or suspension of a State's program is required to protect the public health and safety or (2) that the State has not complied with one or more requirements of Section 274 of the AEA (e.g., the requirement for the State program to be compatible with the NRC program).

The revocation of Utah's Agreement State status, as requested by the petitioner, hinges on whether Utah's regulatory scheme of providing an exemption from State or Federal ownership of the site was compatible with NRC's regulatory requirements and whether Utah's action in granting the exemption provided for adequate protection of the public health and safety. The NRC regulations contain an exemption provision in 10 CFR 61.6 that allows the Commission to grant any exemption from the requirements in Part 61 provided that the exemption is authorized by law, will not endanger the public health and safety or the common defense and security and is otherwise in the public interest. The land ownership provision in Section 61.59 is subject to this exemption provision. Although NRC has not exercised its authority under the exemption provision in Part 61 as Utah has exercised, Utah's regulatory scheme contains an exemption provision similar to the NRC's. Although NRC has not granted (nor has any person requested) any similar exemption, it has not adopted any particular policy or practice precluding this that might be identified to the States as a matter of strict compatibility. In this regard, Utah's regulatory program is not incompatible with the NRC.

The issue then becomes whether the exercise of the exemption provision poses a sufficient safety problem as to require the NRC to revoke or suspend Utah's Agreement State program. The reasons for the exemption Utah issued for LLRW originally were derived in part from the reasons for the exemption it had issued for NORM and NARM, which the NRC staff found not to be sufficient. Upon the NRC's request, Utah provided additional explanation of the reasons for the exemption with regard to LLRW (described below), and also imposed deed restrictions on Envirocare's title to the site, as explained below. Specifically, the State of Utah provided the following justifications for its concept of providing for a degree of State control of the disposal site that would be equivalent to the control provided by the requirement in the regulations for the disposal site to be located on State or Federal land:[3]

* Tooele County has zoned the area that the Envirocare site is in as heavy manufacturing-hazardous (MGH) designation. * * *

* Because of the mixed waste licenses held by Envirocare, Envirocare has recorded in the public records of Tooele County an

[1] On December 8, 1992, the petitioner also submitted a supplemental legal analysis in support of the petition.

[2] As required by this section, the NRC staff has conducted periodic reviews of the Utah Agreement State program since Utah became an Agreement State in 1984. The purpose of these periodic reviews is to determine the adequacy of the State's program to protect the public health and safety and the compatibility of the State's program with that of the NRC.

[3] From a letter dated February 12, 1993 from Dianne R. Nielson, Ph.D., Executive Director, Utah Department of Environmental Quality, to Mr. Carlton Kammerer, Director, Office of State Programs, U.S. Nuclear Regulatory Commission.

Affidavit which refers to and incorporates the land use restrictions of 40 CFR 264.117(c) which controls post closure activities at the site.

* Envirocare is required under License Condition 36 to provide ''as built'' drawings every six months. Because of Envirocare's construction techniques, each generator's waste is segregated from other waste, and site records to be provided after closure will be detailed.

* The transfer of site records is specifically directed by UAC R313–25–33, particularly subparagraph (4).

* To be licensed, radioactive waste disposal facilities must meet siting criteria established in UAC R313–25–3, previously R447–25–3.

* Utah regulations require that after closure there be a 5-year post closure and maintenance period by the licensee until the site is transferred to the site owner for institutional control.

* Utah's regulations require licensees to establish a financial surety in the form of a trust agreement which gives the State exclusive control of the trust fund. The State requires that ''financial or surety arrangements shall remain in effect until the closure and stabilization program has been completed * * * and the license has been transferred.'' Until a transfer of the license occurs, the surety arrangement remains in effect and will continue to be reviewed to determine the amount necessary to protect public health, safety, and property.

* The State and Envirocare entered into an Agreement Establishing Covenants and Restrictions which identifies the site and the purpose of the licensed operations at the site.

The license ''Transfer and Termination'' sections of the State regulations indicate that the site operator will transfer and/or terminate its license and turn over the site to a governmental agency for the active institutional control period. The exemption in controversy here is an exemption from those sections of the regulations. Since Envirocare is the site owner and operator and no governmental agency is or has been authorized to take title to the site, transfer and termination of the Envirocare license would not occur prior to the active institutional control period. Therefore, Envirocare would remain responsible for the site under the license and the institutional control phase would be implemented by Envirocare.

In order to determine the adequacy of the Utah regulatory framework for protecting the public health and safety, the NRC staff analyzed the control of the disposal site for the three major phases in the life of a low-level waste disposal site (operations, closure, and post-closure observation and maintenance; active institutional control; and passive institutional control). This analysis was conducted to determine which mechanisms, if properly constructed, could provide adequate control in lieu of Government ownership of the land. In addition, the NRC staff considered the special circumstances posed by the Envirocare site.

Operations, Closure, and Post-Closure Observation and Maintenance Period

Envirocare has title to the land and, therefore, is responsible for all activities on the site. The licensee has provided a Trust Agreement with the State of Utah that provides funds for closure and the post-closure period and the active institutional control period in the event the licensee is financially incapable of closing the site or abandons the site. The license limits the accumulation of undisposed waste to a specific amount that can be disposed of through the use of the trust funds.

One Hundred-Year Active Institutional Control Period

The State proposed that it is exercising control and can continue to exercise control of the site in such a manner that land ownership is not necessary to protect the public health and safety from the material that is being disposed of at the site. In particular, the State points to its control of the trust fund that includes the money for the active institutional control period. If the site owner is not capable of conducting the activities required during the active control period, the State will carry out the activities by using the money in the trust fund. Under the control mechanisms, the State would not need to own the site to carry out these activities.

Passive Institutional Control Period

The State proposed the use of deed annotation as a method of informing individuals who may wish to use the site in the future that the land was used for waste disposal and should not be disturbed.

The staff found that the mechanism submitted by the State lacked specificity needed to implement the requisite degree of control because the land annotation did not provide sufficient restrictions on the future use of the site. As a result of this deficiency, the staff suggested a proposed ''restrictive covenant'' that the State of Utah could use to implement the requisite degree of control.

In brief, the provisions of the restrictive covenant suggested by the NRC staff were in addition to any restrictions on the title already recorded in the Tooele County records, and, *inter alia*, proposed to restrict Envirocare and its successors and assigns with respect to the property as follows: (1) No excavation or construction, except as necessary to maintain the premises, shall be allowed after the LLRW is disposed of and the facility closed; (2) No uses of the property shall be made which may impair its integrity; (3) Any change in use of the property following closure of the facility shall require the prior written consent of the Utah Department of Environmental Quality; (4) Envirocare and its successors or assigns, shall erect and continuously maintain monuments and markers, approved by the Department, to warn of the presence of radioactive material at the site; (5) Envirocare shall not convey the property without the prior written approval of the Department, nor shall Envirocare consummate any conveyance of any interest in the property without adequate and complete provision for continued maintenance of the property; and (6) Any State or Federal governmental agency affected by any violations of these restrictive covenant may enforce them by legal action in the District Court for Tooele County. As the proposed restrictive covenant made clear, the State of Utah will have the power to control the ownership, use, and maintenance of the Envirocare property after closure of the facility to a degree equivalent to ownership of the site. Moreover, both Utah and the NRC, in particular, would have the right to enforce the covenant.

The Commission, after careful consideration, came to the conclusion that the institutional controls, such as the proposed restrictive covenant, could be used in this case to achieve the same safety result as site ownership by State or Federal authorities. The Commission's decision was conveyed to the State in a June 28, 1993 letter from Mr. Kammerer to Dr. Nielson. The purpose of the Federal or State government land ownership requirement is to provide a higher degree of assurance that through State or Federal government ownership of the site, institutional control of the site will continue to exist for longer periods of time than under private ownership. Regarding the similarity between land ownership and a restrictive covenant, in each case there is an entity in existence to take action to remedy any on site difficulty. With land ownership, the State can take action with regard to its ownership of the land, and with a restrictive covenant, the State can take action to enforce the restrictive covenant. The State of Utah executed a restrictive covenant with the terms

described above with Envirocare on June 29, 1993.

In addition, the NRC is required by law to continue to review the Utah Agreement State program for adequacy and compatibility. If at any time in the future during these reviews the NRC determines that the public health and safety is not being protected, the Commission will begin proceedings for taking necessary action, including, if appropriate, the suspension or termination, of the Utah program.

In summary, the requirement in 10 CFR 61.59(a) regarding land ownership specifies that disposal of radioactive waste received from others may only be permitted on land owned in fee by the Federal or a State government. The State of Utah issued an exemption from its State or Federal land ownership requirement pursuant to Utah's regulations, which provides that the State may grant ''such exemptions or exceptions from the requirements of these regulations as it determines are authorized by law and will not result in undue hazard to public health and safety or property.'' This Utah exemption provision is similar to the Commission's exemption in 10 CFR 61.6. One June 28, 1993, the Commission approved this approach as acceptable, with the proper implementing mechanisms put in place. On the day of the Commission's decision, the State was informed that the Commission decided that the State's rationale of exercising effective control of the waste disposal site without State or Federal land ownership was acceptable and was equivalent to the control that would be provided by State or Federal ownership. The letter to the State also attached a suggested restrictive covenant intended to provide sufficient restrictions on the future use of the site. On June 30, 1993, the State of Utah provided the NRC with a recorded copy of the executed restrictive covenant between Envirocare of Utah, Inc. and the Utah Department of Environmental Quality.

A follow up review of State actions and documentation was performed by the NRC staff during a review visit of the Utah Agreement State program on August 30 through September 2, 1993. The question of control of the site after the period of post-closure observation and maintenance was addressed by the State's extension of the license term through the institutional control periods. The authorization to receive and dispose of waste will expire at closure of the disposal facility, but the responsibility of the licensee to maintain the site will continue through these control periods. As a result, the trust funds required for the license now and in the future will not be released to the licensee until the licensee has satisfied the license termination requirements. The amount of surety as of September 30, 1994 was approximately $4.1 million. The surety is reviewed and adjusted annually. The Commission expects that Utah will require an amount of funds necessary to ensure protection of the public health and safety through the active control period.

An additional issue identified as part of the NRC staff review of this petition relates to liability for remediation and corrective measures in the event of an off site release of radioactive materials from the disposal facility. The NRC staff requested the State of Utah to identify actions that the State could take to identify and compel a responsible party to perform remediation and necessary corrective measures in the event that no licensee exists and significant off site releases occur. The State responded that it has the authority to identify and compel responsible parties to perform remediation and, in defined circumstances, the State may perform cleanups. Specific measures identified by the State were: [4]

*The Radiation Control Board has the authority to establish rules and issue orders to enforce laws and rules [Utah Code Annotated (UCA) Section 19–3–104(9)]. Additionally, the Executive Secretary of the Board is authorized to enforce rules through the issuance of orders [UCA Section 19–3–108(2)(c)(iii)].

*To the extent that the release is of a ''hazardous substance (under CERCLA) or hazardous material'' as defined in UCA Section 19–6–302, the Executive Director of the Department of Environmental Quality may issue an abatement order if there exists a direct and immediate threat to the public health or the environment and may use environmental mitigation fund monies established by the Utah legislature to investigate and abate the release (UCA Section 109–6–309).

*The Executive Director of the Department of Environmental Quality may issue mitigation orders where conditions exist which create a clear and present hazard to the public health or the environment and which requires immediate action [UCA Section 19–1–202(2)(a)].

*The Attorney General or the county attorney has authority to bring any civil or criminal action requested by the Executive Director of the Department of Environmental Quality or the Utah Radiation Control Board to abate a condition which exists in violation of or for enforcement of laws or standards, orders, and rules of the Department [UCA 19–1–204].

*The Governor is authorized to respond to technological hazards which include radiation incidents under the Disaster Response and Recovery Act [UCA 63–5a–1 to 11].

[4] From a letter dated September 6, 1994 from Dianne R. Nielson, Ph.D., Executive Director, Utah Department of Environmental Quality, to Mr. Richard L. Bangart, Director, Office of State Programs, U.S. Nuclear Regulatory Commission.

IV. Special Considerations

The Envirocare LLRW disposal facility (co-located with the NORM disposal facility) is located in Clive, Tooele County, Utah, approximately 85 miles west of Salt Lake City, Utah. This facility is located adjacent to: (1) The U.S. Department of Energy's (DOE) South Clive disposal cell containing uranium mill tailings from the former Vitro South Salt Lake facility that was cleaned-up and moved to this site pursuant to the Uranium Mill Tailings Radiation Control Act of 1978; (2) an NRC-licensed facility operated by Envirocare to receive, store, and dispose of uranium and thorium byproduct material [as defined by Section 11e.(2) of the AEA, as amended]; and (3) Envirocare facility licensed under the State of Utah's authority for disposal of Resource Conservation and Recovery Act (RCRA) material as delegated by the U.S. Environmental Protection Agency (EPA) for those radioactive wastes which have been mixed with, or contain, hazardous material. These facilities are located within the Tooele County Hazardous Waste Zone, approximately 20 miles from any residents. On January 12, 1988, the Tooele County Commission established the West Desert Hazardous Industry Area, which limits the future uses of land in the vicinity of the site by prohibiting residential housing. The facilities are located in the extreme eastern margin of the Great Salt Lake Desert which is part of the Basin and Range Province of North America. The groundwater quality at these disposal sites is extremely poor due to a very low annual precipitation, high evaporation, low infiltration, and an abundance of evaporate materials in the near surface sediments in the Great Salt Lake Desert. According to EPA classifications, the two aquifers beneath the site are considered Class III since they both have a total dissolved solids content in excess of 10,000 mg/L. The NRC staff has concluded that the groundwater in the disposal site area is of a poor quality and is not suitable for most known uses without significant treatment.

Under these circumstances, it cannot be said that the Utah regulatory program for the Envirocare site, including the control periods, surety provision, restrictive covenant, and Utah remedial action powers fails to provide adequate

protection of the public health and safety. Moreover, the NRC's governmental site ownership provision is directed at assuring control over potential releases over very long periods of time (in excess of 100 years), and the Utah program, especially the restrictive covenant and remedial action powers, should likewise achieve an adequate level of control. NRC staff recognizes that, under other circumstances, a State's ownership of a site as contrasted with private land ownership of the site might, in theory, carry with it some greater legal or ''moral'' obligation by the State to take affirmative action to assure safety. However, given the nearby presence of the RCRA facility, the proximity of two other radioactive waste disposal activities under Federal land ownership requirements, and the remoteness of the site, the Commission does not believe private site ownership poses a sufficient real safety issue to warrant revocation or suspension of the Utah regulatory program.

V. Conclusion

The NRC has carefully reviewed the issues raised by the petitioner in the staff's review of the Utah program. For the reasons discussed above, I find no need for taking such action. Rather, on the basis of the review efforts by the NRC staff, I concluded that the petitioner has not raised a sufficient issue of Utah's compliance with one or more requirements of Section 274 of the AEA or any substantial health and safety issues to warrant the action requested. Accordingly, the petitioner's request to suspend or revoke the Utah Agreement State program for failure to require State or Federal site ownership at the Envirocare of Utah, Inc. LLRW disposal site is denied.[5] A copy of this decision will be placed in the Commission's Public Document Room, Gelman Building, 2120 L Street, NW, Washington, DC 20555. A copy of this decision will also be filed with the Secretary for the Commission's review as stated in 10 CFR 2.206(c) of the Commission's regulations. The decision will become the final action of the Commission twenty-five (25) days after issuance unless the Commission on its own motion institutes review of the decision within that time.

Dated at Rockville, Maryland this 26th day of January, 1995.

For the Nuclear Regulatory Commission.

Richard L. Bangart,

Director, Office of State Programs.

[FR Doc. 95–2578 Filed 2–1–95; 8:45 am]

BILLING CODE 7950–01–M

[5] In a letter of July 8, 1993 to NRC Chairman Ivan Selin, the petitioner claimed that the Commission's decision of June 28, 1993 denied the petitioner an opportunity for a hearing on its petition for the revocation of Utah's Agreement State status to argue the policy issues associated with the land ownership exemption. Neither the AEA nor the Commission's regulations provides for a hearing on the evaluation of an Agreement State program. The Commission's review of the Agreement State program incorporated a review of the issues raised in the petition.

[Docket No. 50–213]

Connecticut Yankee Atomic Power Company; Notice of Consideration of Issuance of Amendment to Facility Operating License and Opportunity for a Hearing

The U.S. Nuclear Regulatory Commission (the Commission) is considering issuance of an amendment to Facility Operating License No. DPR–61, issued to Connecticut Yankee Atomic Power Company (the licensee), for operation of the Haddam Neck Plant located in Middlesex County, Connecticut.

The proposed amendment would modify the Technical Specification (TS) 3.4.5, ''Steam Generators,'' surveillance requirements 4.4.5.3.a and 4.4.5.3.b. These surveillance requirements pertain to the inservice inspection of the steam generator tubes and are being modified to support a 24 month fuel cycle.

Before issuance of the proposed license amendment, the Commission will have made findings required by the Atomic Energy Act of 1954, as amended (the Act) and the Commission's regulations.

By March 6, 1995, the licensee may file a request for a hearing with respect to issuance of the amendment to the subject facility operating license and any person whose interest may be affected by this proceeding and who wishes to participate as a party in the proceeding must file a written request for a hearing and a petition for leave to intervene. Requests for a hearing and a petition for leave to intervene shall be filed in accordance with the Commission's Rules of Practice for Domestic Licensing Proceedings'' in 10 CFR Part 2. Interested persons should consult a current copy of 10 CFR 2.714 which is available at the Commission's Public Document Room, the Gelman Building, 2120 L Street, NW., Washington, DC, and at the local public document room located at the Russell Library, 123 Broad Street, Middletown, CT 06457. If a request for a hearing or petition for leave to intervene is filed by the above date, the Commission or an Atomic Safety and Licensing Board, designated by the Commission or by the Chairman of the Atomic Safety and Licensing Board Panel, will rule on the request and/or petition; and the Secretary or the designated Atomic Safety and Licensing Board will issue a notice of hearing or an appropriate order.

As required by 10 CFR 2.714, a petition for leave to intervene shall set forth with particularity the interest of the petitioner in the proceeding, and how that interest may be affected by the results of the proceeding. The petition should specifically explain the reasons why intervention should be permitted with particular reference to the following factors: (1) The nature of the petitioner's right under the Act to be made a party to the proceeding; (2) the nature and extent of the petitioner's property, financial, or other interest in the proceeding; and (3) the possible effect of any order which may be entered in the proceeding on the petitioner's interest. The petition should also identify the specific aspect(s) of the subject matter of the proceeding as to which petitioner wishes to intervene. Any person who has filed a petition for leave to intervene or who has been admitted as a party may amend the petition without requesting leave of the Board up to 15 days prior to the first prehearing conference scheduled in the proceeding, but such an amended petition must satisfy the specificity requirements described above.

Not later than 15 days prior to the first prehearing conference scheduled in the proceeding, a petitioner shall file a supplement to the petition to intervene which must include a list of the contentions which are sought to be litigated in the matter. Each contention must consist of a specific statement of the issue of law or fact to be raised or controverted. In addition, the petitioner shall provide a brief explanation of the bases of the contention and a concise statement of the alleged facts or expert opinion which support the contention and on which the petitioner intends to rely in proving the contention at the hearing. The petitioner must also provide references to those specific sources and documents of which the petitioner is aware and on which the petitioner intends to rely to establish those facts or expert opinion. Petitioner must provide sufficient information to show that a genuine dispute exists with the applicant on a material issue of law or fact. Contentions shall be limited to matters within the scope of the amendment under consideration. The contention must be one which, if proven, would entitle the petitioner to relief. A petitioner who fails to file such a supplement which satisfies these

requirements with respect to at least one contention will not be permitted to participate as a party.

Those permitted to intervene become parties to the proceeding, subject to any limitations in the order granting leave to intervene, and have the opportunity to participate fully in the conduct of the hearing, including the opportunity to present evidence and cross-examine witnesses.

A request for a hearing or a petition for leave to intervene must be filed with the Secretary of the Commission, U.S. Nuclear Regulatory Commission, Washington, DC 20555, Attention: Docketing and Services Branch, or may be delivered to the Commission's Public Documents Room, the Gelman Building, 2120 L Street, NW., Washington, DC, by the above date. Where petitions are filed during the last 10 days of the notice period, it is requested that the petitioner promptly so inform the Commission by a toll-free telephone call to Western Union at 1–(800) 248–5100 (in Missouri 1–(800) 342–6700). The Western Union operator should be given Datagram Identification Number N1023 and the following message addressed to Phillip F. McKee: petitioner's name and telephone number, date petition was mailed; plant name; and publication date and page number of this **Federal Register** notice. A copy of the petition should also be sent to the Office of the General Counsel, U.S. Nuclear Regulatory Commission, Washington, DC 20555, and to Gerald Garfield, Esquire, Day, Berry & Howard, Counselors at Law, City Place, Hartford, CT 06103–3499, attorney for the license.

Nontimely filings of petitions for leave to intervene, amended petitions, supplemental petitions and/or requests for hearing will not be entertained absent a determination by the Commission, the presiding officer or the presiding Atomic Safety and Licensing Board that the petition and/or request should be granted based upon a balancing of the factors specified in 10 CFR 2.714(a)(1) (i)–(v) and 2.714(d).

If a request for a hearing is received, the Commission's staff may issue the amendment after it completes its technical review and prior to the completion of any required hearing if it publishes a further notice for public comment of its proposed finding of no significant hazards consideration in accordance with 10 CFR 50.91 and 50.92.

For further details with respect to this action, see the application for amendment dated December 20, 1994, which is available for public inspection at the Commission's Public Document Room, the Gelman Building, 2120 L Street, NW., Washington, DC, and at the local public document room located at the Russell Library, 123 Broad Street, Middletown, CT 06457.

Dated at Rockville, Maryland, this 24th day of January 1995.

For the Nuclear Regulatory Commission.

Phillip F. McKee,

Director, Project Directorate I–4, Division of Reactor Projects—I/II, Office of Nuclear Reactor Regulation.

[FR Doc. 95–2572 Filed 2–1–95; 8:45 am]

BILLING CODE 7590–01–M

[Docket No. 50–213]

Connecticut Yankee Atomic Power Co.; Notice of Issuance of Amendment to Facility Operating License

The U.S. Nuclear Regulatory Commission (Commission) has issued Amendment No. 178 to Facility Operating License No. DPR–61 issued to Connecticut Yankee Atomic Power Company (the licensee), which revised the Technical Specifications for operation of the Haddam Neck Plant located in Middlesex County, Connecticut. The amendment is effective as of the date of issuance to be implemented within 30 days of issuance.

The amendment revises Technical Specifications (TS) 3.4.1.1, ''Reactor Coolant Loops and Coolant Circulation,'' TS 3.7.1.1., ''Safety Valves—Self Actuation Function,'' Table 3.7–1, ''Steam Line Safety Valves Per Loop,'' and their associated Bases sections. In addition, the change adds a new TS 3.7.1.1.2, ''Safety Valves—Remote Actuation Function.''

The application for the amendment complies with the standards and requirements of the Atomic Energy Act of 1954, as amended (the Act), the Commission's rules and regulations. The Commission has made appropriate findings as required by the Act and the Commission's rules and regulations in 10 CFR Chapter I, which are set forth in the license amendment.

Notice of Consideration of Issuance of Amendment and Opportunity for Hearing in connection with this action was published in the **Federal Register** on June 7, 1993 (58 FR 31979). No request for a hearing or petition for leave to intervene was filed following this notice.

The Commission has prepared an Environmental Assessment related to the action and has determined not to prepare an environmental impact statement. Based upon the environmental assessment, the Commission has concluded that the issuance of the amendment will not have a significant effect on the quality of the human environment (59 FR 66564).

For further details with respect to the action see (1) the application for amendment dated May 4, 1993, as supplemented August 9 and 18, 1993, January 25, April 11, and June 22, 1994, (2) Amendment No. 178 to License No. DPR–61, (3) the Commission's related Safety Evaluation, and (4) the Commission's Environmental Assessment. All of these items are available for public inspection at the Commission's Public Document Room, the Gelman Building, 2120 L Street NW., Washington, DC, and at the local public document room located at the Russell Library, 123 Broad Street, Middletown, CT 06457.

Dated at Rockville, Maryland, this 26 day of January 1995.

For the Nuclear Regulatory Commission,

Alan B. Wang,

Project Manager, Project Directorate I–4, Division of Reactor Projects—I/II, Office of Nuclear Reactor Regulation.

[FR Doc. 95–2577 Filed 2–1–95; 8:45 am]

BILLING CODE 7590–01–M

SECURITIES AND EXCHANGE COMMISSION

[Release No. 34–35281; File No. SR–CBOE–94–38]

Self-Regulatory Organizations; Chicago Board Options Exchange, Inc.; Order Granting Temporary Approval of a Proposed Rule Change Relating to the Short Sale of Securities in the Nasdaq National Market

January 26, 1995.

I. Introduction

On October 25, 1994, the Chicago Board Options Exchange, Inc. (''CBOE'' or ''Exchange'') filed with the Securities and Exchange Commission (''Commission'' or ''SEC''), pursuant to Section 19(b)(1) of the Securities Exchange Act of 1934 (''Act'') [1] and Rule 19b–4 thereunder,[2] a proposal to amend its Rule 15.10 regarding short sales of Nasdaq National Market (''Nasdaq/NM'' or ''NM'') securities. The proposed rule change was published for comment and appeared in the **Federal Register** on

[1] 15 U.S.C. 78s(b)(1) (1988).

[2] 17 CFR 240.19b–4 (1993).

November 16, 1994.[3] No comments were received on the proposal.[4]

II. Description of the Proposal

CBOE Rule 15.10 concerns the availability to Exchange market markers of the bid test exemption from the National Association of Securities Dealers' (''NASD'') short sale rule.[5] The Exchange is amending Rule 15.10 to expand the definition of ''designated Nasdaq/NM security'' [6] to include all Nasdaq/NM securities which underlie the options classes for which a market maker holds an appointment. Currently, the rule limits designated Nasdaq/NM securities to no more than three trading stations of a market maker, although CBOE Rule 8.3 allows market makers to have appointments, absent an exemption, in up to five trading stations. The CBOE believes the limitation to three trading stations is unnecessarily restrictive and that the proposed change is consistent with the application of the exemption for options market makers on other exchanges.[7]

The CBOE also is proposing to amend Interpretation .02 to CBOE Rule 15.10 to permit an options market maker, with prior notice to an Exchange Floor Official or Order Book Official, to facilitate an off-floor options or combination order and contemporaneously hedge the resulting options position with a short sale in applicable Nasdaq/NM securities as if such securities were designated securities under paragraph (c)(2) of the Rule. The Floor Official or Order Book official notified of such a transaction is required to file a report describing it with the Department of Market Surveillance, and must give a copy of the report to the market maker.

Finally, the CBOE is proposing to amend Interpretation .03 to CBOE Rule 15.10 to allow a nominee of a market maker organization to effect bid test exempt short sales in a Nasdaq/NM security which the market maker nominee has not designated as qualifying for the exemption contained in paragraph (c)(2), provided that the security is a designated Nasdaq/NM security for another nominee of the market maker organization and such other nominee is not also present or represented by a Floor Broker in the applicable trading station at the time of the bid test exempt sale. The CBOE believes that this will allow a market maker organization to manage its obligations better when nominees are absent from the trading floor for reasons such as illness.

III. Discussion

The Commission finds the proposed rule change consistent with the requirements of the Act and the rules and regulations thereunder applicable to a national securities exchange. Specifically, the proposed rule change is consistent with the requirements of Section 6(b)(5) of the Act, because the proposal is designed to promote just and equitable principles of trade, remove impediments to and perfect the mechanism of a free and open market, and protect investors and the public interest.

The Commission believes that the CBOE's proposal to expand the definition of ''designated Nasdaq/NM security'' is consistent with the market maker exemption from the NASD's bid test rule. This exemption recognizes the need for options market makers to hedge their options positions by buying or selling (including selling short) shares of underlying stocks or certain underlying component stocks contained in stock indexes. In relevant part, the NASD's market maker bid test exemption provides that a ''qualified options market maker'' is an options market maker who has received an appointment as a ''qualified options market maker'' for certain classes of stock options on Nasdaq/NM securities and indexes pursuant to the rules of a ''qualified options exchange.'' [8] The exemption further provides that a ''qualified options exchange'' is a national securities exchange that has approved rules and procedures providing for designating market makers as qualified options market makers that are designed to identify options market makers who regularly engage in market making activities in the particular options classes.[9]

The CBOE's proposal would expand the classes of stock options for which its market makers may be deemed ''qualified options market makers'' by extending the definition of ''designated Nasdaq/NM security'' to all Nasdaq/NM securities underlying options for which a market maker holds an appointment.[10] The new provision is consistent with the comparable provisions adopted by other options exchanges.[11]

The CBOE's proposal also is consistent with NASD Rules given that the exemption's availability is limited to securities underlying options contracts in which a market maker holds an appointment. A market maker has a continuous obligation to maintain a fair and orderly market with respect to such securities, and must conduct a certain percentage of trading on the CBOE in the appointed classes.[12] Additionally, the CBOE requires that to qualify for the market maker short sale exemption, a short sale in a Nasdaq/NM security must be effected to hedge, and in fact services to hedge, an options transaction.[13] The CBOE has adopted surveillance procedures designed to monitor its market makers' use of the market maker exemption so as to ensure that short sales effected by qualified options market makers are exempt hedge transactions and that other, nonqualified market makers, are not using the exemption.[14]

Proposed Interpretation .02 will allow an options market maker, with prior notice to a Floor Official or Order Book Official, to facilitate an off-floor order, and contemporaneously hedge the

[3] See Securities Exchange Act Release No. 34947 (November 7, 1994), 59 FR 59262.

[4] The CBOE filed its proposal after receiving a comment letter concerning its Rule 15.10. See letter from Michael J. Carusillo, General Partner, O'Connor & Associates, to Jeff Schroer, Vice President, Market Surveillance, CBOE, dated September 21, 1994 (''O'Connor Letter'').

[5] The Commission approved the NASD's bid test (or ''short sale'') rule in Securities Exchange Act Release No. 34277 (June 6, 1994), 59 FR 34885 (amending the NASD's Rules of Fair Practice (''NASD Rules''). The CBOE's proposal concerning the market maker exemption from the bid test rule, along with the proposals of the other options exchanges, was approved in Securities Exchange Act Release No. 34632 (September 2, 1994), 59 FR 46999 (approving proposals by the American Stock Exchange (''Amex''), CBOE, New York Stock Exchange (''NYSE''), Pacific Stock Exchange (''PSE''), and Philadelphia Stock Exchange (''Phlx'').

[6] CBOE Rule 15.10(c)(2)(ii)(B).

[7] See O'Connor Letter, *supra* note 4.

The O'Connor Letter compares the application of the CBOE's rule to the application of the corresponding rules of the other options exchanges concerning the market maker exemption to the NASD short sale rule. It concludes that the CBOE's rule is more restrictive, causing CBOE market makers to be placed at a disadvantage relative to market makers at other exchanges. *Id.*

[8] NASD Rules, Art. III, section 20(h)(2)(b).

[9] NASD Rules, Art. III, section 48(h)(2)(c).

[10] As noted above, CBOE Rule 8.3(c) provides that a market maker's appointment is limited to the options classes trading at no more than five trading stations absent an exemption by the Market Performance Committee. The Exchange recently filed a proposal (File No. SR–CBOE–94–44) to expand market maker appointments from five trading stations to 10, stating that the current five station limit puts it at a competitive disadvantage relative to other options exchanges. See Securities Exchange Act Release No. 35192 (January 4, 1995), 60 FR 3012.

[11] See Amex Rule 957(d)(2)(b)(i); NYSE Rule 959A(a); PSE Rule 4.19(c)(2)(B) (these exchanges allow the short sale exemption to be available to all Nasdaq/NM securities which underlie the options classes for which a market maker holds an appointment); Phlx Rule 1072(c)(2)(ii) (the Phlx limits the short sale exemption to Nasdaq/NM securities underlying no more than 20 options allocated or assigned).

[12] See CBOE Rule 8.7, Obligations of Market-Makers (setting forth specific obligations of market makers).

[13] CBOE Rule 15.10(c)(2)(ii).

[14] See Securities Exchange Act Release No. 34632, *supra* note 4.

resulting options position with a short sale in applicable Nasdaq/NM securities as if such security was a designated Nasdaq/NM security. The Floor Official or Order Book Official who is notified of such a transaction must file a report describing the transaction with the Department of Market Surveillance and must provide the market maker with a copy of the report. The market maker, in turn, must maintain a copy of the report to demonstrate the transaction was bid test exempt. The Commission believes that this provision is consistent with the NASD's interpretation regarding hedging activities associated with the facilitation of customer transactions in options and that the procedures for reporting a transaction under the provision will ensure adequate monitoring.[15]

As noted above, Proposed Interpretation .03 will give a market maker organization more flexibility to manage its market making obligations by allowing a nominee of such organization to affect short sales of securities as bid test exempt even though the nominee has not designated such securities as bid test exempt eligible, provided that the securities have been designated bid test exempt eligible by another nominee of the market maker organization, and further provided that the bid test exempt eligible nominee is not present on the trading floor. The Commission believes this is a reasonable provision designed to address instances where a market maker nominee is absent from the trading floor due to illness, personal, or other business. The Commission believes that this provision is consistent with the intent of the market maker exemption to the short sale rule, in that the exemption continues to be limited to those Nasdaq/NM securities which are used to hedge options transactions in the primary classes in which the market maker organization makes markets. The CBOE will monitor the use of this provision pursuant to the short sale exemption surveillance procedures currently in place.[16]

Finally, it should be noted that CBOE Rule 15.10 was approved on a temporary basis, to remain in effect so long as there exists a market maker exemption to the NASD's short sale rule.[17] Accordingly, the changes approved herein also are being approved for the same temporary period.

IV. Conclusion

For the reasons discussed above, the Commission finds that the proposal is consistent with the Act, and, in particular, Section 6 of the Act.

It Is Therefore Ordered, pursuant to Section 19(b)(2) of the Act,[18] that the proposed rule change (File No. SR–CBOE–94–38) is approved on a temporary basis, to remain in effect so long as CBOE Rule 15.10 remains in effect.

For the Commission, by the Division of Market Regulation, pursuant to delegated authority.[19]

Margaret H. McFarland,

Deputy Secretary.

[FR Doc. 95–2552 Filed 2–1–95; 8:45 am]

BILLING CODE 8010–01–M

[15] See letter from Richard G. Ketchum, Chief Operating Officer and Executive Vice President, NASD, to David A. Dami, First Vice President & Associate General Counsel, Global Derivatives, Paine Webber, Inc., dated September 13, 1994.

[16] See letter from Patricia Sizemore, Director, Department of Market Surveillance, CBOE, to Francois Mazur, Attorney, Division of Market Regulation, Commission, dated January 25, 1995.

[17] See Securities Exchange Act Release No. 34632, *supra* note 4. If the NASD later amends its short sale rule in a manner that affects the market maker exemption, including its definition, conditions, and requirements, the CBOE and other options exchanges might be required to amend their own companion market maker exemption rules so that market makers may avail themselves of any continued market maker exemption. *Id.*

[18] 15 U.S.C. 78s(b)(2) (1988).

[19] 17 CFR 200.30–3(a)(12) (1993).

[Release No. 34–35282; File No. SR–CBOE–94–53]

Self-Regulatory Organizations; Notice of Filing of Proposed Rule Change by the Chicago Board Options Exchange, Inc. Relating to a Determination of the Exchange's Office of the Chairman Pursuant to Exchange Rule 4.10(b)(3) That Certain Financial Requirements be Imposed Upon Member Organizations That Clear Options Market Maker Transactions

January 26, 1995.

Pursuant to Section 19(b)(1) of the Securities Exchange Act of 1934 (''Act''),[1] notice is hereby given that on December 22, 1994, the Chicago Board Options Exchange, Inc. (''CBOE'' or ''Exchange'') filed with the Securities and Exchange Commission (''Commission'') the proposed rule change as described in Items I, II, and III below, which Items have been prepared by the self-regulatory organization. The Commission is publishing this notice to solicit comments on the proposed rule change from interested persons.

[1] 15 U.S.C. 78s(b)(1) (1988).

I. Self-Regulatory Organization's Statement of the Terms of Substance of the Proposed Rule Change

The CBOE proposes to issue a regulatory circular (''Regulatory Circular'') concerning a determination by the Exchange's Office of the Chairman pursuant to Exchange Rule 4.10(b)(3) that certain financial requirements be imposed upon member organizations that clear options market maker transactions.[2]

II. Self-Regulatory Organization's Statement of the Purpose of, and Statutory Basis for, the Proposed Rule Change

In its filing with the Commission, the self-regulatory organization included statements concerning the purpose of and basis for the proposed rule change and discussed any comments it received on the proposed rule change. The text of these statements may be examined at the places specified in Item IV below. The self-regulatory organization has prepared summaries, set forth in Sections (A), (B) and (C) below, of the most significant aspects of such statements.

(A) Self-Regulatory Organization's Statement of the Purpose of, and Statutory Basis for, the Proposed Rule Change

The purpose of the proposed Regulatory Circular is to inform the Exchange's membership that, acting pursuant to its authority under Rule 4.10(b)(3), the Office of the Chairman has determined that it is necessary to impose certain financial requirements upon Exchange members that clear the transactions of options market makers. The Exchange believes that for such members to continue in business without such requirements has the potential to threaten the financial integrity of Exchange market maker transactions.[3] The Office of the Chairman has determined that the current method of calculating options

[2] The proposed Regulatory Circular is available from the Commission and the CBOE. See *infra* Part IV.

[3] Exchange Rule 4.10(b)(3) provides that the Office of the Chairman may impose additional financial and operational requirements on a member that clears market maker trades when the Office of the Chairman determines that the member's continuance in business without such requirements has the potential to threaten the financial or operational integrity of Exchange market maker transactions. Rule 4.10(b)(7) provides that the Exchange shall file notice with the Commission in accordance with the provisions of Section 19(d)(1) of the Act of all final decisions to impose extraordinary requirements pursuant to Rule 4.10(b)(3). In addition, the Exchange has elected to file the Regulatory Circular as a proposed rule change under Section 19(b)(1) of the Act.

market maker haircuts under Rule 15c3–1(c)(2)(x) of the Act is less effective in that many hedged positions receive haircuts which are excessive while the haircuts for uncovered positions do not adequately reflect their potential risk.[4]

As reflected in the Regulatory Circular, the Office of the Chairman has determined to require all exchange members that clear options market maker transactions on a proprietary or market maker customer basis to calculate options market maker haircuts in accordance with a haircut methodology developed jointly by the Exchange and the Options Clearing Corporation (''OCC'') and based upon the theoretical options pricing model of Cox-Ross-Rubinstein.[5] The haircut treatment imposed by the Office of the Chairman is the same as that described in a recent Division no-action letter.[6] The Office of the Chairman also has determined to allow an alternative calculation of haircuts for stock index baskets in accordance with the Division's staff no-action letter dated February 27, 1986.[7] Although the 1986 no-action letter requires an operationally more cumbersome calculation, the Exchange believes the resulting lower haircuts more effectively recognize the hedging benefits of partial stock baskets offset by options and futures.

To the extent that this Exchange imposed haircut treatment would result in lower charges than currently required by Rule 15c3–1 under the Act, the February 27, 1986 and March 15, 1994 no-action letters provide the basis for the lower charges. To the extent that the Exchange imposed haircut treatment would result in higher haircuts, such greater requirements are being imposed pursuant to the Exchange's authority under its Rule 4.10(b)(3).

To date, all but two Exchange members which clear the transactions of independent options market makers are calculating haircuts pursuant to the methodology described in this filing. We understand that the remaining two Exchange members are currently taking the operational steps necessary to comply with these parameters, and that these firms will be operationally prepared to calculate haircuts under these parameters by no later than early January 1995.

All Exchange market makers have been provided timely and adequate notice of the impending haircut changes through Exchange regulatory circulars and direct communication from their clearing members. The Exchange also provided several opportunities for special meetings with Exchange Financial Compliance staff to discuss the impact of the haircut changes. The new haircuts and implementation plan were also discussed at numerous meetings of the Exchange's Clearing Procedures Committee. The expected impact of risk-based haircuts was also discussed at a general meeting open to all Exchange members. It is our understanding that market makers on other exchanges have also been advised of the new charges. The implementation has proceeded smoothly.[8]

The Exchange believes that the imposition of these financial requirements is within the Exchange's authority, and that these requirements represent a more rigorous and reasoned basis upon which to assess capital charges. All market maker clearing firms are expected to be using the revised methodology of calculating haircuts by early January 1995. Nevertheless, the Office of the Chairman is using its authority under Rule 4.10(b)(3) to make it clear that the revised haircut treatment will be imposed now and equally across all positions of all options market makers, pending the Commission's consideration of a proposed rule to impose a similar haircut treatment upon all broker-dealers.[9]

The Exchange believes that its proposal is consistent with and furthers the objectives of Section 6(b)(5) of the Act in that it will promote maintenance of fair and orderly markets and will contribute to the protection of investors and the public interest.

(B) Self-Regulatory Organization's Statement on Burden on Competition

CBOE does not believe that the proposed rule change will impose any burden on competition.

(C) Self-Regulatory Organization's Statement on Comments on the Proposed Rule Change Received From Members, Participants, or Others

Written comments on the proposed rule change were neither solicited nor received.

III. Date of Effectiveness of the Proposed Rule Change and Timing for Commission Action

Within 35 days of the date of publication of this notice in the **Federal Register** or within such longer period (i) as the Commission may designate up to 90 days of such date if it finds such longer period to be appropriate and publishes its reasons for so finding or (ii) as to which the self-regulatory organization consents, the Commission will:

(a) By order approve such proposed rule change, or

(b) Institute proceedings to determine whether the proposed rule change should be disapproved.

IV. Solicitation of Comments

Interested persons are invited to submit written data, views and arguments concerning the foregoing. Persons making written submissions should file six copies thereof with the Secretary, Securities and Exchange Commission, 450 Fifth Street NW., Washington, DC 20549. Copies of the submission, all subsequent amendments, all written statements with respect to the proposed rule change that are filed with the Commission, and all written communications relating to the proposed rule change between the Commission and any person, other than those that may be withheld from the public in accordance with the provisions of 5 U.S.C. 552, will be available for inspection and copying in the Commission's Public Reference Section, 450 Fifth Street NW., Washington, DC. Copies of such filing

[4] The Exchange believes that the Commission and the Division of Market Regulation (''Division'') share its concerns. In Chapter 5 of the staff's report concerning capital adequacy during the 1987 Market Break, the staff stated that, ''The substantial losses of market makers * * * demonstrate that the present net capital treatment accorded to short options positions is inadequate to insure against the risk of major market movements.''

[5] See letter from Mary L. Bender, First Vice President, CBOE, and John C. Hiatt, Executive Vice President, OCC, to Michael Macchiaroli, Associate Director, Division, Commission, dated May 7, 1993.

[6] See letter from Brandon Becker, Director, Division, Commission, to Mary L. Bender, First Vice President, CBOE, and Timothy Hinkes, Vice President, OCC, dated March 15, 1994. See also Securities Exchange Act Release No. 33761 (March 15, 1994), 59 FR 13275 (Proposed Rule Amendments to Capital Requirements for Brokers or Dealers Under the Securities Exchange Act of 1934).

[7] See letter from Michael A. Macchiaroli, Assistant Director, Division, Commission, to David Marcus, Executive Vice President, Regulatory Services Group, New York Stock Exchange, Inc., dated February 27, 1986.

[8] The new haircut methodology has been implemented at options market maker clearing firms on a staggered basis subsequent to thorough testing of each firm's capabilities by the Exchange, OCC, and other designated examining authorities. The first three firms began using the new haircuts on May 6, 1994. Other implementation dates were May 27, June 3, June 24, July 1, and July 22, 1994. The last two firms which clear independent options market makers are expected to have the operational capability to begin using the new haircut methodology sometime in the first quarter of 1995. One self-clearing broker-dealer also is preparing to implement risk-based haircuts; options market making is not a material part of the firm's business and a date for implementation has not yet been scheduled.

[9] See *supra* note 6.

will also be available for inspection and copying at the principal office of the above-mentioned self-regulatory organization. All submissions should refer to File No. SR–CBOE–94–53 and should be submitted by February 23, 1995.

For the Commission, by the Division of Market Regulation, pursuant to delegated authority.[10]

Margaret H. McFarland,

Deputy Secretary.

[FR Doc. 95–2553 Filed 2–1–95; 8:45 am]

BILLING CODE 8010–01–M

[Release No. 34–35285; File No. SR–GSCC–94–08]

Self-Regulatory Organizations; Government Securities Clearing Corporation; Notice of Filing of Proposed Rule Change Relating to Mandatory Participation in the Yield-to-Price Conversion Process

January 27, 1995.

Pursuant to Section 19(b)(1) of the Securities Exchange Act of 1934 (''Act''),[1] notice is hereby given that on November 8, 1994, the Government Securities Clearing Corporation (''GSCC'') filed with the Securities and Exchange Commission (''Commission'') the proposed rule change described in Items I, II, and III below, which items have been prepared primarily by the self-regulatory organization. The Commission is publishing this notice to solicit comments on the proposed rule change from interested persons.

I. Self-Regulatory Organization's Statement of the Terms of Substance of the Proposed Rule Change

The proposed rule change would modify GSCC rules to require participation by members of GSCC's netting system in GSCC's yield-to-price conversion process.

II. Self-Regulatory Organization's Statement of the Purpose of, and Statutory Basis for, the Proposed Rule Change

In its filing with the Commission, GSCC included statements concerning the purpose of and basis for the proposed rule change and discussed any comments it received on the proposed rule change. The text of these statements may be examined at the places specified in Item IV below. GSCC has prepared summaries, set forth in sections (A), (B), and (C) below, of the most significant aspects of such statements.

A. Self-Regulatory Organization's Statement of the Purpose of, and Statutory Basis for, the Proposed Rule Change

(a) The purpose of the proposed rule change is to make the participation by members of GSCC's netting system in GSCC's yield-to-price conversion process mandatory. On October 16, 1992, GSCC implemented its yield-to-price conversion feature, which allows yield trades to be netted and novated on the night the trade is entered and eliminate the need for double submission of when-issued trades. At that time, in order to not impose undue operational or system burdens on certain firms, participation in the conversion process was not made mandatory.

Participation in the yield-to-price conversion process is important for a netting member and for the settlement process in general because otherwise a netting member's when-issued trades do not have GSCC's guarantee of settlement until auction date. Because of this, since October 1992, GSCC has not admitted an entity into netting system membership unless the applicant has agreed to participate in the yield-to-price process at the time of commencement of participation in the netting system. Currently, only one netting member still is not participating in the conversion process, and it is anticipated that it will commence participation in the yield-to-price process by the end of this year.

In light of the importance for a netting member to participate in the yield-to-price conversion process and given the expectation that all current netting members will be participating in the near future, GSCC wishes to make participation in the yield-to-price conversion process by netting members mandatory. GSCC recognizes that there may be temporary situations, for example when an entity commences its participation in the netting system, in which there are operational or other considerations that render participation in the yield-to-price conversion process difficult for a member. In such circumstances, GSCC will retain the ability to temporarily exempt such member from the requirement to participate in the yield-to-price conversion process. For GSCC's protection, however, GSCC will calculate such member's clearing fund deposit and forward mark allocation payment obligations as if it were participating in the yield-to-price conversion process.

(b) The proposed rule change will ensure that netting members' eligible trades are encompassed within GSCC's netting process and therefore that settlement is guaranteed at the earliest point in time possible. Thus, GSCC believes that the proposed rule change is consistent with the requirements of Section 17A of the Act and the rules and regulations thereunder.

B. Self-Regulatory Organization's Statement on Burden on Competition

GSCC does not believe that the proposed rule will have an impact or impose a burden on competition.

C. Self-Regulatory Organization's Statement on Comments on the Proposed Rule Change Received From Members, Participants, or Others

Comments on the proposed rule change have not yet been solicited or received. Members will be notified of the rule filing and comments will be solicited by an Important Notice. GSCC will notify the Commission of any written comments it receives on this matter.

III. Date of Effectiveness of the Proposed Rule Change and Timing for Commission Action

Within thirty-five days of the date of publication of this notice in the **Federal Register** or within such longer period (i) as the Commission may designate up to ninety days of such date if it finds such longer period to be appropriate and publishes its reason for so finding or (ii) as to which the self-regulatory organization consents, the Commission will:

(A) By order approve such proposed rule change or

(B) Institute proceedings to determine whether the proposed rule change should be disapproved.

IV. Solicitation of Comments

Interested persons are invited to submit written data, views, and arguments concerning the foregoing. Persons making written submissions should file six copies thereof with the Secretary, Securities and Exchange Commission, 450 Fifth Street, N.W., Washington, DC 20549. Copies of the submission, all subsequent amendments, all written statements with respect to the proposed rule change that are filed with the Commission, and all written communications relating to the proposed rule change between the Commission and any person, other than those that may be withheld from the public in accordance with the provisions of 5 U.S.C. 552, will be available for inspection and copying in the Commission's Public Reference

---

[10] 17 CFR 200.30–3(a)(12) (1994).

[1] 15 U.S.C. 78s(b)(1) (1988).

Section, 450 Fifth Street, N.W., Washington, D.C. 20549. Copies of such filing will also be available for inspection and copying at the principal office of GSCC. All submissions should refer to File No. SR–GSCC–94–08 and should be submitted by February 23, 1995.

For the Commission by the Division of Market Regulation, pursuant to delegated authority.

Margaret H. McFarland,

Deputy Secretary.

[FR Doc. 95–2554 Filed 2–1–95; 8:45 am]

BILLING CODE 8010–01–M

[Release No. 34–35288; File No. SR–GSCC–94–10]

Self-Regulatory Organizations; Government Securities Clearing Corporation; Notice of Proposed Rule Change Relating to Implementing a Comparison Service for Repurchase and Reverse Repurchase Transactions Involving Government Securities as the Underlying Instrument

January 27, 1995.

Purusant to Section 19(b)(1) of the Securities Exchange Act of 1934 (''Act''),[1] notice is hereby given that on December 30, 1994, the Government Securities Clearing Corporation (''GSCC'') filed with the Securities and Exchange Commission (''Commission'') the proposed rule change as described in Items, I, II, and III below, which items have been prepared primarily by GSCC. The Commission is publishing this notice to solicit comments on the proposed rule change from interested persons.

I. Self-Regulatory Organization's Statement of the Terms of Substance of the Proposed Rule Change

GSCC proposes to modify its rules to provide comparison services for repurchase and reverse repurchase transactions involving government securities as the underlying instrument (''repos'').

II. Self-Regulatory Organization's Statement of the Purpose of, and Statutory Basis for, the Proposed Rule Change

In its filing with the Commission, GSCC included statements concerning the purpose of and basis for the proposed rule change and discussed any comments it received on the proposed rule change. The text of these statements may be examined at the places specified in Item IV below. GSCC has prepared summaries, set forth in sections (A), (B), and (C) below, of the most significant aspects of such statements.

(A) Self-Regulatory Organization's Statement of the Purpose of, and the Statutory Basis for, the Proposed Rule Change

GSCC proposes to provide comparison, netting, and risk management services to participants in the government securities repo market. GSCC ultimately intends to provide services for the opening (''on'') and closing (''off'') legs of all overnight repos (also referred to as next-day repos), term repos (also referred to as forward setting repos), and open repos, including the same-day settling aspects of those repos. These services will include the tracking of rate changes and open repo interest, the provision to the funds borrower of coupon protection, the provision to all parties of a comprehensive audit trail for their repo activity from inception to settlement, and the monitoring and facilitation of collateral substitutions.

Of paramount importance to GSCC is that it ensures that the types of services that it provides are appropriate for the repo market and beneficial to its participants. In this regard, several years ago, GSCC began discussing with its Board members and with the Public Securities Association's (''PSA'') Repo Committee how GSCC might best provide centralized and automated comparison, netting, risk management, and settlement services for the repo market.

A Working Group of the PSA's Repo Committee, in a December 10, 1992, letter to GSCC, encouraged GSCC to proceed with providing comparison services for repos while working on establishing an acceptable plan for the provision of netting services for repos. At that time, GSCC undertook several initiatives that helped establish a foundation for the safe and effective provision of services for repos. In particular, it significantly upgraded its technological capabilities. GSCC now has two physically remote data processing sites. At each site, GSCC maintains redundant hardware configurations. Each processing site is in an environment totally dedicated to GSCC and is capable of processing the day's business independent of the other. Also, GSCC is in the process of implementing a real time communications switch that will support interactive communication with members in order to facilitate their sending data to GSCC as trades occur.

GSCC commenced its efforts to implement services for repos this past June by taking in data on repo transactions from certain member firms that are active in the repo market. The main objective of the tests was to collect live data that GSCC could use to evaluate the viability of its draft input specifications and to assess the impact of repo processing on existing systems and services. With these tests having been successfully concluded, GSCC now plans to implement the initial stage of the first phase of its planned repo services commencing in the first quarter of 1995.

The comprehensive services to be provided by GSCC for repos will be offered in three phases. The first phase will involve the provision of comparison and netting services. This rule filing will provide authority for GSCC to implement the initial stage of the first phase, which is the provision of comparison services for overnight and term repos. Subsequent rule filings will be made for authority to implement both the next stage of the first phase of repo services, which is the provision of netting and risk management services for the non-same-day settling aspects of next-day forward settling repo transactions, and future phases of repo services.

The second implementation phase of GSCC's planned repo services will focus on the provision of comparison, netting, and risk management services for open repos as well as the offering of additional services of benefit to industry participants, including the tracking of rate changes, the tracking and facilitation of collateral substitutions, and other enhancements to the comparison process designed to provide full service comparison for the repo product.

The last phase of GSCC's planned implementation of repo services will focus on providing intraday netting and risk management services for the same-day settling aspects of repo transactions, including settlement of same-day settling start legs and close-outs of open repos.

Encompassing repos in GSCC's automated comparison process will provide industry participants with many benefits, including: (1) Elimination of the need for physical confirmations, (2) timely comparison of repo trade data, (3) easier monitoring of the status of open repo transactions and of the modifications made to those transactions over their life (*e.g.*, tracking of repo interest rate changes), (4) enhanced ability for identification and correction of errors, (5) easier recordkeeping, and (6) easier access to audit trail information.

Again, Phase 1 comparison will involve the comparison of all overnight

[1] 15 U.S.C. 78s(b)(1) (1988).

and term repo trades involving eligible securities whether or not the on leg occurs before, on, or after the submission date. Open repos will not be accepted during the first phase. GSCC will accept and compare data on all of the components of a repo transaction, including information on the on and off legs of a repo, with members providing such data via a single input. Same-day settling on and off legs will be compared but not netted.

The Phase 1 comparison process for repos will be substantially similar to the comparison process offered by GSCC today. Each party to a repo will submit its transaction data to GSCC.[2] If all mandatory data fields that are required to match do in fact match, a comparison will be generated by GSCC.[3] If the data on a repo remains uncompared at end-of-day, the submitter of the repo data will receive a comparison request advisory. If a repo transaction has not yet been compared, it may be unilaterally canceled, and the submitter will receive notification of the cancellation. To cancel a repo that has been compared, bilateral agreement is required. Trade data on repo transactions that remain uncompared shall be deleted from GSCC's Comparison System the later of (1) The processing cycle after the second business day after the repo start date or (2) the processing cycle after the second business day after the date of submission of such data.

As is the case now for non-repo transactions, comparison of a repo trade will occur immediately upon the receipt by GSCC from two members of matching data. GSCC comparison output will continue to be available on an on-line basis.

To be eligible for comparison, both submitting members must be deemed eligible for repo comparison processing by GSCC. GSCC will make such a determination based on the demonstration by a member of its ability to submit designated input to and receive designated output from GSCC.

The implementation of Phase 1 comparison services for repos will require the following modifications to GSCC's comparison processes:

(1) The ''transaction type'' data field will be expanded to include two additional transaction types: ''repo'' (designating the side of the repo transaction that is borrowing funds and lending securities) and ''revr'' (designating the side of the repo transaction that is lending funds and borrowing securities). Repos and reverse repos will compare only with each other and not with buy and sell activity.

(2) Two new mandatory match items for repo transactions will be introduced: start date and start amount. The repo start date will indicate the settlement date for the start leg of the repo. The repo start amount will contain the contract value for the start leg of the repo. Initially, a $1 per repo transaction tolerance for start amount will be established.

(3) If a participating member does not submit the settlement amount, GSCC will calculate it using the start amount, repo rate, and the number of days from start date to settlement date. Initially, a $1 per million tolerance will be established for settlement amount.

(4) The repo rate will be a required submission field. If the settlement amount is not provided, this field along with the start amount and the repo term will be used to calculate the settlement amount.

(5) Two optional data fields have been added to bolster the comparison process for repos, the give-up broker field and the secondary reference number field. Dealer members may use the give-up broker field to identify the broker, if any, used to conduct the repo. GSCC will provide members with a standardized list of brokers for this purpose. The secondary reference number field may be used by dealers to provide additional identification information on the repos.

(6) Phased comparison of trade date (*i.e.*, the comparison of a trade where the information submitted regarding trade date does not match based on a presumption that the earlier trade date submitted is the correct trade date) will not apply to repos in Phase 1. Also, par summarization (*i.e.*, the comparison of a trade based on a match of either the total of the par amounts on two or more buy sides equaling the par amounts on one or more sell sides or the total of the par amounts on two or more sell sides equaling the par amounts on one or more buy sides) will not apply to repo transactions in Phase 1.

(7) The $40 per million tolerance on final money that applies to buy/sells will not apply to repos. This tolerance is used by GSCC in its phased comparison process to account for commission differences.

GSCC represents that its automated facilities are sufficient to implement the proposed comparison services for repos that are the subject of this filing and that the addition of these services will not diminish GSCC's ability to provide its current services for non-repo transactions in a safe, efficient, and timely manner.

GSCC believes that the proposed rules change will allow GSCC to provide the benefits of centralized, automated comparison to a broader segment of government securities transactions. GSCC believes that the proposed rule change is consistent with the requirements of the Act, and specifically with Section 17A of the Act,[4] and the rules and regulations thereunder.

B. Self-Regulatory Organization's Statement on Burden on Competition

GSCC does not believe that the proposed rule will have an impact or impose a burden on competition.

C. Self-Regulatory Organization's Statement on Comments on the Proposed Rule Change Received From Members, Participants, or Others

Comments on the proposed rule change have not yet been solicited or received. Members will be notified of the rule filing and comments will be solicited by an Important Notice. GSCC will notify the Commission of any written comments received by GSCC.

III. Date of Effectiveness of the Proposed Rule Change and Timing for Commission Action

Within thirty-five days of the date of publication of this notice in the **Federal Register** or within such longer period (i) as the Commission may designate up to ninety days of such date if it finds such longer period to be appropriate and publishes its reasons for so finding or (ii) as to which the self-regulatory organization consents, the Commission will:

(A) By order approve such proposed rule change or

(B) Institute proceedings to determine whether the proposed rule change should be disapproved.

IV. Solicitation of Comments

Interested persons are invited to submit written data, views, and arguments concerning the foregoing.

[2] The proposed rule change will establish a new schedule of required data submission items applicable to all trades. In addition to the items on the schedule of required match data, a member must submit the broker reference number, contra submitting member's executing firm, executing firm, external reference number, price or rate, pricing method, and trade date.

[3] The following items must match for a trade to compare: (1) contra member identifying information, (2) CUSIP number, (3) member's identifying number, (4) par amount (quantity), (5) settlement amount, (6) settlement date, and (7) transaction type (i.e., buy, sell, repo, or reverse). In addition, these required match data items must match only for repo transactions: (1) start amount (i.e., the contract value for the start leg of the repo transaction) and (2) start date (i.e., the settlement date for the start leg of a repo transaction).

[4] 15 U.S.C. 78q–1 (1988).

Persons making written submissions should file six copies thereof with the Secretary, Securities and Exchange Commission, 450 Fifth Street NW., Washington, DC 20549. Copies of the submission, all subsequent amendments, all written statements with respect to the proposed rule change that are filed with the Commission, and all written communications relating to the proposed rule change between the Commission and any person, other than those that may be withheld from the public in accordance with the provisions of 5 U.S.C. 552, will be available for inspection and copying in the Commission's Public Reference Section, 450 Fifth Street NW., Washington, DC 20549. Copies of such filing will also be available for inspection and copying at the principal office of GSCC. All submissions should refer to File No. SR–GSCC–94–10 and should be submitted by February 23, 1995.

For the Commission by the Division of Market Regulation, pursuant to delegated authority.[5]

Margaret H. McFarland,

Deputy Secretary.

[FR Doc. 95–2550 Filed 2–1–95; 8:45 am]

BILLING CODE 8010–01–M

[5] 17 CFR 200.30–3(a)(12) (1994).

[Release No. 34–35284; File No. SR–NASD–95–01]

Self-Regulatory Organizations; Notice of Proposed Rule Change by the National Association of Securities Dealers, Inc. Relating to Subscriber Fees For Non-NASD Members Receiving the Nasdaq Workstation™ II Functionality

January 27, 1995.

Pursuant to Section 19(b)(1) of the Securities Exchange Act of 1934 (''Act''), 15 U.S.C. 78s(b)(1), notice is hereby given that on January 9, 1995 the National Association of Securities Dealers, Inc. (''NASD'' or ''Association'') filed with the Securities and Exchange Commission (''Commission'' or ''SEC'') the proposed rule change as described in Items I, II, and III below, which Items have been prepared by the NASD. The Commission is publishing this notice to solicit comments on the proposed rule change from interested persons.

Self-Regulatory Organization's Statement of the Terms of Substance of the Proposed Rule Change

On December 14, 1994, the NASD submitted a proposed rule change—File No. SR–NASD–94–76—to the Commission that established a new fee schedule for NASD member firms receiving the second generation of Nasdaq Workstation™ service (''NWII'').[1] The fee schedule contained in File No. SR–NASD–94–76 became effective upon receipt by the SEC in accordance with Section 19(b)(3)(A)(ii) of the Act and Rule 19b–4(a) thereunder.[2] As specified in File No. SR–NASD–94–76, the new subscriber fees for NWII will be added to Sections A(9) and E(5) of Part VIII of Schedule D to the NASD By-Laws.

Pursuant to Section 19(b)(1) of the Act, the NASD hereby files this proposed rule change to extend to non-NASD members (e.g., institutional investors) receiving NWII functionality the same subscriber fees that members must now pay: (a) A service charge of $100/month per server; (b) a display charge of $500/month per presentation device; and (c) a charge of $1,150/month for additional circuits. This rule change does not, however, entail any further modification to the fee schedule language for NWII that was set forth in File No. SR–NASD–94–76.

II. Self-Regulatory Organization's Statement of the Purpose of, and Statutory Basis for, the Proposed Rule Change

In its filing with the Commission, the NASD included statements concerning the purpose of and basis for the proposed rule change and discussed any comments it received on the proposed rule change. The text of these statements may be examined at the places specified in Item IV below. The NASD has prepared summaries, set forth in Sections (A), (B), and (C) below, of the most significant aspects of such statements.

(A) Self-Regulatory Organization's Statement of the Purpose of, and Statutory Basis for, the Proposed Rule Change

The sole purpose of this rule change is to extend to non-NASD members receiving the NWII, the same fees that now apply to NASD members that subscribe to the NWII. Currently, non-NASD members can access to Level 2 Nasdaq Workstation functionality by subscription to the original version of the Nasdaq Workstation service (hereinafter referred to as ''NWI'').[3] As the NWII roll-out proceeds, it will completely replace the existing NWI for all classes of subscribers. The instant rule change will ensure that the same NWII charges are paid by all subscribers, including those that do not belong to the NASD.

The roll-out of NWII, which began in November, 1994, constitutes a significant milestone in the upgrade of hardware, software, and network facilities that comprise the infrastructure of The Nasdaq Stock Market (''Nasdaq''). The software driving NWII is windows-based and provides several data management features that are not available in NWI. Moreover, a new network—known as the Enterprise Wide Network (''EWN'')—has been developed to deliver NWII functionality. The capacity of the EWN is more than five times that of the network developed for NWI (*i.e.*, 56,000 baud versus 9,600 baud). Since the NWII roll-out has now begun, it is appropriate to implement service fees calculated to recover the higher costs of operating and maintaining the NWII functionality and the EWN.

Under the NWII, each subscriber location will have at least one service delivery platform or server that resides on the EWN. (The server functions as the subscriber's gateway to the EWN.) Each server will be capable of supporting up to eight presentation devices (*i.e.*, Workstations). To recover the operational and maintenance costs associated with providing NWII, the new fee structure establishes a charge of $100/month per server and a charge of $500/month for each Workstation or presentation device linked to that server. Thus, an NWII subscriber with 8 Workstations and 1 server would pay $4,100/month under the proposed fee structure. Although it is possible to support as many as eight Workstations on a single server, an NWII subscriber might wish to configure its operating environment, for example, with two servers, each supporting 4 Workstations. In this circumstance, the subscriber would pay $1,150/month for the second circuit at the same location, $200/month for the two servers, and $4,000/month for receipt of NWII functionality on 8 Workstations. The NWII fee structure is premised on the assumption that a subscriber will maximize the capacity of each server before adding a second

[1] The computer facilities that support the provision of NWII are operated by The Nasdaq Stock Market, Inc. (''NSMI''), a wholly owned subsidiary of the NASD.

[2] See Release No. 34–35189 (January 3, 1995), 60 FR 3014 (January 12, 1995).

[3] The NWII roll-out will occur in five phases with the final phase scheduled for completion in mid-1996. Each phase consists of installing NWII at all subscriber sites in a defined geographic area. Thus, while the roll-out proceeds, some subscribers will continue to utilize NWI and will pay the existing charges for that service.

telecommunications circuit and server. However, if a subscriber elects to add servers and circuits without maximizing, that subscriber will bear the additional circuit cost of $1150/month, which constitutes a pass-through of the actual cost borne by NSMI.

The NASD believes that the proposed rule change is consistent with the requirements of Section 15A(b)(5) of the Act. Section 15A(b)(5) specifies that the rules of a national securities association shall provide for the equitable allocation of reasonable dues, fees, and other charges among members, issuers, and other persons using any facility or system that the Association operates or controls. As noted above, this proposal provides that the newly established fees for members receiving the NWII functionality will also be paid by non-member subscribers receiving the NWII.[4] This, in turn, effectuates fairness in the recovery of the applicable costs from the entire subscriber base. As described earlier, NWII is being implemented in phases with all current NWI subscribers in a defined area being converted to NWII. Assuming Commission approval of this rule change, all non-NASD members that are converted to NWII will be liable for the new fees; NWI subscribers (i.e., members and non-members) will continue to pay the NWI service fees until they are converted.

The NASD believes that the proposed NWII fees are reasonable in that they were calculated to recover the projected costs of operating and maintaining the NWII software, hardware, and the EWN. The development costs associated with NWII have been expensed by NSMI and will not be recovered through the new NWII fees. Although higher than the existing fees for NWI, the NWII fees are believed reasonable in that subscribers will be provided the increased functionality embedded in the new software package, increased network capacity to accommodate future growth in traffic and business volume, and upgraded hardware capable of more rapid processing of message traffic to and from market participants.

Based on the foregoing, the NASD submits that the extension of the new NWII fee schedule to non-members will result in the imposition of uniform fees and an equitable allocation of operating costs among all subscribers receiving the NWII functionality.

(B) Self-Regulatory Organization's Statement on Burden on Competition

The NASD believes that the proposed rule change will not result in any burden on competition that is not necessary or appropriate in furtherance of the purposes of the Act.

(C) Self-Regulatory Organization's Statement on Comments on the Proposed Rule Change Received from Members, Participants, or Others

Comments were neither solicited nor received.

III. Date of Effectiveness of the Proposed Rule Change and Timing for Commission Action

Within 35 days of the date of publication of this notice in the **Federal Register** or within such longer period (i) as the Commission may designate up to 90 days of such date if it finds such longer period to be appropriate and publishes its reasons for so finding or (ii) as to which the NASD consents, the Commission will:

A. By order approve such proposed rule change, or

B. Institute proceedings to determine whether the proposed rule change should be disapproved.

IV. Solicitation of Comments

Interested persons are invited to submit written data, views, and arguments concerning the foregoing. Persons making written submissions should file six copies thereof with the Secretary, Securities an Exchange Commission, 450 Fifth Street, N.W., Washington, D.C. 20549. Copies of the submission, all subsequent amendments, all written statements with respect to the proposed rule change that are filed with the Commission, and all written communications relating to the proposed rule change between the Commission and any person, other than those that may be withheld from the public in accordance with the provisions of 5 U.S.C. 552, will be available for inspection and copying in the Commission's Public Reference Room. Copies of the filing will also be available for inspection and copying at the principal office of the NASD. All submissions should refer to the file number in the caption above and should be submitted by February 23, 1995.

For the Commission, by the Division of Market Regulation, pursuant to delegated authority.[5]

[FR Doc. 95–2555 Filed 2–1–95; 8:45 am]

BILLING CODE 8010–01–M

[4] NWI and NWII both permit the delivery of either Level 2 or Level 3 Nasdaq service. Subscription to Level 3 is limited to NASD members that meet the financial and operational requirements for market making. Subscription to Level 2 Nasdaq service is open to non-members as well as members because it does not provide the functionality needed to enter quotations as a market maker.

[5] 17 CFR 200.30–3(a)(12).

[Release No. 34–35265; File No. SR–OCC–94–11]

Self-Regulatory Organizations; The Options Clearing Corporation; Notice of Filing of Proposed Rule Change Relating to Implementation of a Three-Day Settlement Standard for Options Exercises

January 23, 1995.

Pursuant to Section 19(b) (1) of the Securities Exchange Act of 1934, (''Act''),[1] notice is hereby given that The Options Clearing Corporation (''OCC'') filed with the Securities and Exchange Commission (''Commission'') the proposed rule change on December 30, 1994, as described in Items I, II, and III below, which item have been prepared primarily by OCC. The Commission is publishing this notice to solicit comments on the proposed rule change from interested persons.

I. Self-Regulatory Organization's Statement of the Terms of Substance of the Proposed Rule Change

The purpose of the proposed rule change is to amend OCC's Rules to make them consistent with a three business day settlement time frame.

II. Self-Regulatory Organization's Statement of the Purpose of, and Statutory Basis for, the Proposed Rule Change

In its filing with the Commission, OCC included statements concerning the purpose of and basis for the proposed rule change. The text of these three statements may be examined at the places specified in Item IV below. The OCC has prepared summaries, set forth in sections (A), (B), and (C) below, of the most significant aspects of such statements.

A. Self-Regulatory Organization's Statement of the Purpose of, and Statutory Basis for, the Proposed Rule Change

The purpose of the proposed rule change is to amend OCC's Rules, both with respect to settlements of options exercises and with respect to the stock loan program, to make them consistent with Rule 15c6–1 under the Act. Rule 15c6–1 establishes three business days after the trade date (''T+3''), instead of five business days, as the standard

[1] 15 U.S.C. 78s(b)(1) (1988).

settlement time frame for most broker-dealer trades.[2] OCC requests that the proposed rule change become effective on the date Rule 15c6–1 becomes effective.[3]

OCC Rule 902 currently requires that the assigned clearing member of an exercised call option contract or the exercising clearing member of an exercised put option contract deliver the underlying securities on the fifth business day following the day on which the exercise notice was given to OCC. ''Fifth'' will be changed to ''third.'' Rule 2207 currently dictates the settlement date for a stock loan to be the date that is five business days after the date on which the lending clearing member initiates the termination by notifying OCC. Five business days will be changed to three business days. Rule 2208(b) provides that if the lending clearing member initiates the termination of a stock loan and does not receive the loaned stock in its securities depository account on the date that is five business days after the date on which the lending clearing member initiated the termination, the lending clearing member may execute a buy-in at such time or at any time thereafter. Five business days will be changed to three business days.

OCC has agreed to an implementation plan proposed by the National Securities Clearing Corporation (''NSCC'') for transition to a T+3 settlement cycle. The schedule is as follows.

Trade date	Settlement cycle	Settlement date
June 2 Friday	5 day	June 9 Friday.
June 5 Monday	4 day	June 9 Friday.
June 6 Tuesday.	4 day	June 12 Monday.
June 7 Wednesday.	3 day	June 12 Monday.

OCC will add interpretations to Rules 902 and 2207 which will state that OCC will cause settlements of options exercises and assignments and stock loans to be conducted on a schedule which is consistent with any schedule for transition from a five day settlement cycle to a three day settlement cycle for regular-way stock trades.[4]

The proposed rule change is consistent with the purposes and requirements of Section 17A of the Act, as amended, because it will bring OCC's rules into conformity with Rule 15c6–1 and will promote the development of uniform standards and procedures for clearance and settlement.

B. Self-Regulatory Organization's Statement on Burden on Competition

OCC does not believe that the proposed rule change would impose any burden on competition.

C. Self-Regulatory Organization's Statement on Comments on the Proposed Rule Change Received From Members, Participants or Others

Written comments were not and are not intended to be solicited with respect to the proposed rule change, and none have been received.

III. Date of Effectiveness of the Proposed Rule Change and Timing for Commission Action

Within thirty-five days of the date of publication of this notice in the **Federal Register** or within such longer period (i) as the Commission may designate up to ninety days of such date if it finds such longer period to be appropriate and publishes its reasons for so finding or (ii) as to which the self-regulatory organization consents, the Commission will:

(A) By order approve such proposed rule change or

(B) Institute proceedings to determine whether the proposed rule change should be disapproved.

IV. Solicitation of Comments

Interested persons are invited to submit written data, views, and arguments concerning the foregoing. Persons making written submissions should file six copies thereof with the Secretary, Securities and Exchange Commission, 450 Fifth Street, NW., Washington, DC 20549. Copies of the submission, all subsequent amendments, all written statements with respect to the proposed rule change that are filed with the Commission, and all written communications relating to the proposed rule change between the Commission and any person, other than those that may be withheld from the public in accordance with the provisions of 5 U.S.C. 552, will be available for inspection and copying in the Commission's Public Reference Room, 450 Fifth Street, NW., Washington, DC 20549. Copies of the filing will also be available for inspection and copying at the principal office of OCC. All submissions should refer to File No. SR–OCC–94–11 and should be submitted by February 23, 1995.

For the Commission by the Division of Market Regulation, pursuant to delegated authority.

Margaret H. McFarland,

Deputy Secretary.

[FR Doc. 95–2551 Filed 2–1–95; 8:45 am]

BILLING CODE 8010–01–M

[2] Securities Exchange Act Release No. 33023 (October 6, 1993), 58 FR 52891.

[3] Rule 15c6–1 will become effective on June 7, 1995. Securities Exchange Act Release No. 34952 (November 9, 1994), 59 FR 59137.

[4] Rule 902, Interpretations and Policies .01 and Rule 2207, Interpretation and Policies .02.

[Release No. 34–35286; File No. SR–GSCC–94–9]

Self-Regulatory Organizations; Government Securities Clearing Corporation; Notice of Filing and Immediate Effectiveness of Proposed Rule Change Relating to Member Billing

January 27, 1995.

Pursuant to Section 19(b)(1) of the Securities Exchange Act of 1934[1] (''Act''), notice is hereby given that on December 1, 1994, the Government Securities Clearing Corporation (''GSCC'') filed with the Securities and Exchange Commission (''Commission'') the proposed rule change as described in Items I, II, and III below, which Items have been prepared primarily by GSCC. The Commission is publishing this notice to solicit comments on the proposed rule change from interested persons.

I. Self-Regulatory Organization's Statement of the Terms of Substance of the Proposed Rule Change

GSCC proposes to amend its method of billing in order to bill members for actual activity done during the previous month.

II. Self-Regulatory Organization's Statement of the Purpose of, and Statutory Basis for, the Proposed Rule Change

In its filing with the Commission, GSCC included statements concerning the purpose of and basis for the proposed rule change and discussed any comments it received on the proposed rule change. The text of these statements may be examined at the places specified in Item IV below. GSCC has prepared summaries, set forth in sections (A), (B), and (C) below, of the most significant aspects of such statements.

(A) Self-Regulatory Organization's Statement of the Purpose of and Statutory Basis for, the Proposed Rule Change

The primary purpose of the proposed rule change is to change the method by which members are billed so that their

[1] 15 U.S.C. 78s(b)(1) (1988).

bills reflect the actual activity conducted during the prior month. Previously, GSCC billed each member at the beginning of a particular month for the member's anticipated business during that month. GSCC would adjust the next month's bill to reflect the actual business conducted by the member during the previous month. Under the proposal, GSCC will bill members each month for the activity during the prior month. To implement this billing method, in December 1994 GSCC will credit to each member one month's pre-billing of fees and other charges. Beginning in January 1995, the change in the billing method will result in GSCC billing members for actual activity conducted during the prior month (*i.e.,* during December 1994).

(B) Self-Regulatory Organization's Statement on Burden on Competition

GSCC does not believe that the proposed rule change will have an impact or impose a burden on competition.

(C) Self-Regulatory Organization's Statement on Comments on the Proposed Rule Change Received from Members, Participants or Others

GSCC has not solicited or received comments on the proposed rule change.

III. Date of Effectiveness of the Proposed Rule Change and Timing for Commission Action

The foregoing rule change has become effective pursuant to Section 19(b)(3)(A)(iii) [2] of the Act and pursuant to Rule 19b–4(e)(3) [3] promulgated thereunder, because the proposal is concerned solely with the administration of GSCC. At any time within sixty days of the filing of such rule change, the Commission may summarily abrogate such rule change if it appears to the Commission that such action is necessary or appropriate in the public interest, for the protection of investors, or otherwise in furtherance of the purposes of the Act.

IV. Solicitation of Comments

Interested persons are invited to submit written data, views, and arguments concerning the foregoing. Persons making written submissions should file six copies thereof with the Secretary, Securities and Exchange Commission, 450 Fifth Street, N.W., Washington, D.C. 20549. Copies of the submission, all subsequent amendments, all written statements with respect to the proposed rule change that are filed with the Commission, and all written communications relating to the proposed rule change between the Commission and any person, other than those that may be withheld from the public in accordance with the provisions of 5 U.S.C. § 552, will be available for inspection and copying in the Commission's Public Reference Section, 450 Fifth Street, N.W., Washington, D.C. 20549. Copies of such filing will also be available for inspection and copying at the principal office of GSCC. All submissions should refer to File No. SR–GSCC–94–9 and should be submitted by February 23, 1995.

For the Commission by the Division of Market Regulation, pursuant to delegated authority.[4]

Margaret H. McFarland,

Deputy Secretary.

[FR Doc. 95–2549 Filed 2–1–95; 8:45 am]

BILLING CODE 8010–01–M

[2] 15 U.S.C. § 78s(b)(3)(A)(iii) (1988).

[3] 17 CFR 240.19b–4(e)(3) (1994).

[4] 17 CFR 200.30–3(a)(12) (1994).

SMALL BUSINESS ADMINISTRATION

[License No. 02/72–0555]

RFE Investment Partners V, L.P.; Notice of Issuance of a Small Business Investment Company License

On August 16, 1994, a notice was published in the **Federal Register** (59 FR 42100) stating that an application had been filed by RFE Investment Partners V, L.P. of New Canaan, Connecticut with the Small Business Administration (SBA) pursuant to § 107.102 of the Regulations governing small business investment companies (13 CFR 107.102 (1994)) for a license to operate as a small business investment company.

Interested parties were given until close of business September 16, 1994 to submit their comments to SBA. No comments were received.

Notice is hereby given that, pursuant to Section 301(c) of the Small Business Investment Act of 1958, as amended, after having considered the application and all other pertinent information, SBA approved issuing License No. 02/72–0555 on September 19, 1994, to RFE Investment Partners V, L.P. to operate as a small business investment company. This approval was conditioned upon the firm meeting the statutory minimum capital requirements, which were satisfied, January 24, 1995.

The Licensee will be owned by RFE Associates V, L.P., and will begin operations with $35.7 million of private capital.

(Catalog of Federal Domestic Assistance Program No. 59.011, Small Business Investment Companies)

Dated: October 27, 1994.

Robert D. Stillman,

Associate Administrator for Investment.

[FR Doc. 95–2541 Filed 2–1–95; 8:45 am]

BILLING CODE 8025–01–M

OFFICE OF SPECIAL COUNSEL

Relocation of California Field Office

AGENCY: Office of Special Counsel.

ACTION: Notice.

SUMMARY: Effective February 5, 1995, the San Francisco Field Office of the U.S. Office of Special Counsel will be relocated to Oakland, California. It will be renamed the San Francisco Bay Area Field Office. The new address will be 1301 Clay Street, Suite 365S, Oakland, California, 94612–5217. The new telephone number will be (510) 637–3460.

EFFECTIVE DATE: February 5, 1995.

FOR FURTHER INFORMATION CONTACT: William L. Dean, 1730 M Street, NW., Suite 201, Washington, DC 20036, (202) 653–7144.

Kathleen Day Koch,

Special Counsel.

[FR Doc. 95–2558 Filed 2–1–95; 8:45 am]

BILLING CODE 7405–01–P

DEPARTMENT OF TRANSPORTATION

Federal Aviation Administration

Aviation Rulemaking Advisory Committee; Meeting

AGENCY: Federal Aviation Administration (FAA), DOT.

ACTION: Notice of meeting.

SUMMARY: The FAA is issuing this notice to advise the public of a meeting of the Federal Aviation Administration Aviation Rulemaking Advisory Committee to discuss general aviation operations issues.

DATES: The meeting will be held on February 15, 1995, at 1 p.m.

ADDRESSES: The meeting will be held at the Helicopter Association International, 1635 Prince Street, Alexandria, VA.

FOR FURTHER INFORMATION CONTACT: Mr. Louis C. Cusimano, Assistant Executive Director for General Aviation Operations, Flight Standards Service (AFS–800), 800 Independence Avenue,

SW., Washington, DC 20591. Telephone: (202) 267–8452; FAX: (202) 267–5094.

SUPPLEMENTARY INFORMATION: Pursuant to section 10(a)(2) of the Federal Advisory Committee Act (Pub. L. 92–463; 5 U.S.C. App. II), notice is hereby given of a meeting of the Aviation Rulemaking Advisory Committee to discuss general aviation operations issues. This meeting will be held on February 15, 1995, at 1 p.m. at the Helicopter Association International, 1635 Prince Street, Alexandria, VA. The agenda for this meeting will include a concept briefing from the part 103 (Ultralight Vehicles) Working Group. In addition, the IFR Fuel Requirements/Destination and Alternate Weather Minimums Working Group may present a concept briefing at the meeting. Members of the public may contact Cindy Herman, ARM–108, Federal Aviation Administration, 800 Independence Avenue, S.W. Washington, DC 20591, (202) 267–7627, FAX (202) 267–5075 to obtain copies of the briefings prior to the meeting. Also, the VHF Navigation and Communications Working Group will present a status update.

Attendance is open to the interested public but may be limited to the space available. The public must make arrangements in advance to present oral statements at the meeting or may present written statement to the committee at any time. In addition, sign and oral interpretation can be made available at the meeting, as well as an assistive listening device, if requested 10 calendar days before the meeting. Arrangements may be made by contacting the person listed under the heading **FOR FURTHER INFORMATION CONTACT.**

Issued in Washington, DC on January 27, 1995.

Michael L. Henry,

Alternate Assistant Executive Director for General Aviation Operations, Aviation Rulemaking Advisory Committee.

[FR Doc. 95–2570 Filed 2–1–95; 8:45 am]

BILLING CODE 4910–13–M

Notice of Intent To Rule on Application To Impose and Use the Revenue From a Passenger Facility Charge (PFC) and Use PFC Revenue From Previously Approved Impose Only Projects at McCarran International Airport, Las Vegas, NV

AGENCY: Federal Aviation Administration, DOT.

ACTION: Notice of intent to rule on application.

SUMMARY: The Federal Aviation Administration (FAA) proposes to rule and invites public comment on the application to impose and use PFC revenue from a PFC and to use PFC revenue for previously approved impose only projects at McCarran International Airport under the provisions of the Aviation Safety and Capacity Expansion Act of 1990 (Title IX of the Omnibus Budget Reconciliation Act of 1990, Public Law 101–508 as recodified by Title 49 U.S.C. 40117(C)(3)) and 14 CFR part 158. On October 14, 1994, the FAA determined that the application to impose and use and to use the revenue from a PFC submitted by Clark County was substantially complete within the requirements of section 158.25 of part 158. On November 22, 1994, a **Federal Register** notice was issued covering a total of fourteen projects. Four of these projects and their related bond costs were deferred. This notice updates the November 22, 1994, notice by reinstating the four deferred projects and their related bond costs.

DATES: Comments must be received on or before March 6, 1995.

Note: if comments were provided on the November 22, 1994, notice on this same subject, it is not necessary to recomment.

ADDRESSES: Comments on this application may be mailed or delivered in triplicate to the FAA at the following address: Airports Division, P.O. Box 92007, Worldway Postal Center, Los Angeles, CA 90009 or San Francisco Airports District Office, 831 Mitten Road, Room 210, Burlingame, CA 94010–1303. In addition, one copy of any comments submitted to the FAA must be mailed or delivered to Mr. Robert N. Broadbent, Director of Aviation, P.O. Box 1105, Las Vegas, NV 89111. Comments from air carriers may be in the same form as provided to Clark County under section 158.23 of part 158.

FOR FURTHER INFORMATION CONTACT: Mr. Joseph R. Rodriguez, Supervisor, Planning and Programming Section, Airports District Office, 831 Mitten Road, Room 210, Burlingame, CA 94010–1303, Telephone (415) 876–2805. The application may be reviewed in person at this same location.

SUPPLEMENTARY INFORMATION: The FAA proposes to rule and invites public comment on the application to impose and use the revenue from a PFC at Las Vegas McCarran International Airport under the provisions of the Aviation Safety and Capacity Expansion Act of 1990 (Title IX of the Omnibus Budget Reconciliation Act of 1990, Public Law 101–508 as recodified by Title 49 U.S.C. 40117(C)(3)) and part 185 of the Federal Aviation Regulations (14 CFR part 158). On October 14, 1994, the FAA determined that the application to impose and use and to use the revenue from a PFC submitted by the County of Clark was substantially complete within with requirements of section 158.25 of part 158. On November 22, 1994, the FAA issued a **Federal Register** notice in Volume 59, Number 224, pages 60187 and 60188, which deferred the review of a portion of the September 14, 1994, PFC application at the request of Clark County. Clark County has provided the FAA with additional environmental documentation for the four previously deferred projects. These four projects are described below. The FAA will approve or disapprove the deferred projects, in whole or in part, not later than April 10, 1995.

The following is a brief overview of the application:

Level of the Proposed PFC: $3.00.
Proposed Charge Effective Date: April 1, 1995.
Proposed Charge Expiration Date: June 30, 2025.
Total Estimated PFC Revenue: $448,822,292.

Brief Description of the Proposed Projects

Impose and Use

Runway 1L/19R Upgrade—Construction, Concourse D Design and Construction Phase 1, Automatic Transit System to Concourse D Design and Construction and Related Bond Costs, Including Bond Issuance, Interest and Debt Service Reserves. Total Costs $436,010,292.

Project To Be Changed From Impose Only to Use

Runway 7R/25L Extension. Total Costs $12,812,000.

Class or classes of air carriers which the public agency has requested not be required to collect PFCs: Carriers who file Form 1800–31 *and* carry less than 2,500 passengers per year.

Any person may inspect the application in person at the FAA office listed above under **FOR FURTHER INFORMATION CONTACT**. In addition, any person may, upon request, inspect the application, notice and other documents germane to the application, in person at Clark County.

Issued in Hawthorne, California, on January 13, 1995.

Herman C. Bliss,

Manager, Airports Division, Western-Pacific Region.

[FR Doc. 95–2569 Filed 2–1–95; 8:45 am]

BILLING CODE 4910–13–M

Notice of Intent To Rule on Application To Impose and Use the Revenue From a Passenger Facility Charge (PFC) at Robert Mueller Airport, Austin, TX

AGENCY: Federal Aviation Administration (FAA), DOT.

ACTION: Notice of intent to rule on application.

SUMMARY: The FAA proposes to rule and invites public comment on the application to impose and use the revenue from a PFC at Robert Mueller Municipal Airport under the provisions of the Aviation Safety and Capacity Expansion Act of 1990 (Title IX of the Omnibus Budget Reconciliation Act of 1990) (Public Law 101–508) and part 158 of the Federal Aviation Regulations (14 CFR part 158).

DATES: Comments must be received on or before March 6, 1995.

ADDRESSES: Comments on this application may be mailed or delivered in triplicate copies to the FAA at the following address: Mr. Ben Guttery, Federal Aviation Administration, Southwest Region, Airports Division, Planning and Programming Staff, ASW–610D, Fort Worth, TX 76193–0610.

In addition, one copy of any comments submitted to the FAA must be mailed or delivered to Mr. Charles W. Gates, Director of Aviation, at the following address: Mr. Charles W. Gates, Director of Aviation, City of Austin, 3600 Manor Road, Austin, TX 78723.

Air carriers and foreign air carriers may submit copies of the written comments previously provided to the Airport under section 158.23 of part 158.

FOR FURTHER INFORMATION CONTACT: Mr. Ben Guttery, Federal Aviation Administration, Southwest Region, Airports Division, Planning and Programming Staff, ASW–610D, Fort Worth, TX 76193–0610, (817) 222–5614.

The application may be reviewed in person at this same location.

SUPPLEMENTARY INFORMATION: The FAA proposes to rule and invites public comment on the application to impose and use the revenue from a PFC at Robert Mueller Municipal Airport under the provisions of the Aviation Safety and Capacity Expansion Act of 1990 (Title IX of the Omnibus Budget Reconciliation Act of 1990) (Public Law 101–508) and part 158 of the Federal Aviation Regulations (14 CFR part 158).

On December 22, 1994, the FAA determined that the application to impose and use the revenue from a PFC submitted by the airport was substantially complete within the requirements of section 158.25 of part 158. The FAA will approve or disapprove the application, in whole or in part, no later than April 20, 1995.

The following is a brief overview of the application.

Level of the proposed PFC: $3.00
Proposed charge effective date: March 1, 1995
Proposed charge expiration date: May 31, 2021
Total estimated PFC revenue: $337,821,000.00

Brief Description of Proposed Project(s)

Projects To Impose and Use PFC's

New Airport Passenger Terminal Complex; New Airport Airfield Facilities; and New Airport Landside Facilities.

Proposed class or classes of air carriers to be exempted from collecting PFC's:

On-demand air taxi/commercial operators that (1) do not enplane or deplane at the airport's main passenger building, and (2) enplane fewer than 500 passengers per year at the airport.

Any person may inspect the application in person at the FAA office listed above under **FOR FURTHER INFORMATION CONTACT** and at the FAA regional airports office located at: Federal Aviation Administration, Southwest Region, Airports Division, Planning and Programming Staff, ASW–610D, 2601 Meacham Boulevard, Fort Worth, TX 76137–4298.

In addition, any person may, upon request, inspect the application, notice, and other documents germane to the application in person at the airport.

Issued in Fort Worth, Texas on December 22, 1994.

John M. Dempsey,

Manager, Airports Division.

[FR Doc. 95–2566 Filed 2–1–95; 8:45 am]

BILLING CODE 4910–13–M

Federal Highway Administration

[FHWA Docket No. 95–5]

Comprehensive Truck Size and Weight Study

AGENCY: Federal Highway Administration (FHWA), DOT.

ACTION: Request for comments and establishment of docket.

SUMMARY: This notice requests public comment on an FHWA Comprehensive Truck Size and Weight Study (CTS&WS) through an open docket. In addition, the notice articulates the FHWA's goals with regard to studying the many issues related to truck size and weight (TS&W) policy. Public comments are solicited at this time on the study plan described below and responses are sought to a set of policy questions listed below. FHWA working papers developed for Phase I of the study will be placed in the docket for review and comment by February 15, 1995.

DATES: This docket will remain open until the study is completed. However, in order for comments to be considered during the critical early stages of the study, they should be received no later than April 3, 1995.

ADDRESSES: Submit written, signed comments to FHWA Docket No. 95–5, Federal Highway Administration, Room 4232, HCC–10, Office of the Chief Counsel, 400 Seventh Street, SW., Washington, DC 20590. Interested parties are requested to identify themselves for inclusion on a mailing list for notification of any public meeting(s) that may be held in connection with this study and availability of interim products by providing their names and mailing addresses to the above docket. All public meetings will also be announced in the **Federal Register**.

All comments received will be available for examination at the above address between 8:30 a.m. and 3:30 p.m., e.t., Monday through Friday, except legal holidays. Those desiring notification of receipt of comments must include a self-addressed, stamped envelope or postcard.

FOR FURTHER INFORMATION CONTACT: Mr. Philip Blow, Office of Policy Development, at (202) 366–4036; Mr. Thomas Klimek, Office of Motor Carrier Information Management and Analysis, at (202) 366–2212, or Mr. Charles Medalen, Office of Chief Counsel, at (202) 366–1354, Federal Highway Administration, Department of Transportation, 400 Seventh Street, SW., Washington, DC 20590. Office hours are from 7:45 a.m. to 4:15 p.m., e.t., Monday through Friday, except Federal holidays.

SUPPLEMENTARY INFORMATION:

Background

This study is being conducted partly in response to a legislative proposal in the 103rd Congress, H.R. 4496, that would: (1) Freeze the weights allowed by State law or permit regulation on the non-Interstate portion of the National Highway System (NHS), and (2) freeze the length of new trailers at 53 feet. This bill, or similar legislation, could have a significant impact on the public and private sectors and on the safety and efficiency of the total transport system.

The current TS&W regulations were based on concerns for national

uniformity and good highway system stewardship, including matching vehicle weights and dimensions with the existing public infrastructure and with mechanisms for cost recovery. At times, some States have adopted new pavement and bridge design standards to better match the weights and dimensions of the vehicles being allowed to operate on their highways. Highway engineers are concerned about premature degradation of that infrastructure and the consequent strain on public resources. As technology and shipper demand have resulted in larger and heavier trucks, concerns for highway safety (adequate brakes and vehicle handling and stability) and loss of rail service (due to loss of freight traffic to larger trucks) have become increasingly important, especially with regard to longer combination vehicles (LCV). LCVs are multi-cargo unit truck combinations that weigh more than 80,000 pounds. Typical LCVs are Rocky Mountain doubles (combinations with one trailer 40 feet or longer and another 30 feet or shorter), turnpike doubles (combinations with two 40-foot or longer trailers), or triples (combinations with all three trailers 30 feet or shorter in length).

A shift of some TS&W regulatory responsibilities from the States to the Federal Government occurred at the start of the Interstate construction era in the 1950s, and since then, the distribution of this shared responsibility has shifted back and forth. Now as the Interstate construction era draws to a close, the transport community is again reassessing the Federal role in the context of future highway transportation needs.

The ultimate goal of a comprehensive TS&W study effort is to estimate the net effects of various regulatory options on a transport system evolving to serve a modern global economy. New vehicles, electronic technology, and distribution systems create new capabilities and opportunities. The effects of changing logistics costs, production strategies, and shipping patterns must be evaluated from the perspectives of carriers, managers of infrastructure, shippers, consumers, and the traveling public. Further, the safety and environmental impacts of these regulatory policies must be fully considered.

Thus, TS&W policy touches upon a variety of public concerns such as safety, infrastructure design and wear, carrier and shipper productivity, States' rights and national uniformity, environment, energy use, intermodal competition, and cost recovery. In addition, these concerns exist at the local, State, regional, national, and international scales. The CTS&WS will summarize a wide array of information on the many related aspects of TS&W policy.

Study Plan

In order to address the issues related to possible changes in Federal TS&W provisions, the following study plan has been developed. *Phase I,* TS&W Synthesis, will assess past policy studies and research findings. The major purpose of this phase is to describe what is known about the technical relationships between TS&W policy controls and their related issues. TS&W studies completed within the last 15 years, as well as more recent research not covered in these studies, are being synthesized. The history of State and Federal TS&W regulation is also being reviewed. In addition, State and Federal TS&W regulations are being summarized, and knowledge and research gaps on TS&W issues are being identified and prioritized.

The available material is being synthesized under the subject areas: vehicle stability and control, truck accident data, pavement and bridge wear, highway geometry, traffic operations, truck operating costs, shipper logistics costs, truck travel, mode share, enforcement, environment, energy conservation, permits and pricing mechanisms. Working Papers will be available to the public by February 15, 1995. Phase I will be completed in early 1995.

Phase II, a Preliminary Option Analysis, will evaluate on a limited basis specific policy options using existing databases. This analysis will be preliminary because new data for a comprehensive analysis of TS&W issues, such as commodity flow information, is not expected to be made available by the Bureau of the Census until late 1995. Therefore, Phase II policy options will include appropriate caveats regarding the limitations of earlier studies. The analysis will be as comprehensive as possible, at a minimum including the impacts of changes in Federal TS&W provisions on safety, infrastructure and economic productivity. This phase will be completed during the summer of 1995.

Phase III, an Extended Impact Analysis, will be able to use the data and new tools that become available in 1995 and 1996 to prepare in-depth analyses of the Phase II policy options. It will incorporate results from a parallel cost allocation study, which the FHWA is undertaking to determine whether the various highway users, including heavy vehicles, are paying their fair share into the Highway Trust Fund. Specific policy options will be analyzed using improved information on freight flows and truck use. Phase III will address the full range of costs and benefits estimated to derive from these options. This last phase of the study will be completed by the end of 1996.

Policy Questions and Comments

In addition to comments on the study plan described above, responses to the following questions are solicited from any parties interested in TS&W regulations and issues. The following key policy questions will be considered during the course of the three-phase study:

Federal Interests and Role

1. What are the Federal interests in TS&W regulation? What are the State and local government interests? How can conflicts among Federal, State, and local interests be accommodated?

2. Should there be a Federal role in areas such as standards, investment decisions, user fee collection, operational controls, and enforcement? What should that role be?

3. To what extent is national uniformity needed? For which type of motor carrier operations is national uniformity in TS&W regulation desirable? In terms of type and area of motor carrier operations, in which cases would regional uniformity be more appropriate? For which type of highways is national uniformity desirable? In which cases would regional uniformity be appropriate?

Weight Limits

4. Are changes in Federal weight limits desirable? If so, how should the present Federal vehicle weight limits be changed? (These limits include the single and tandem-axle weight limits, the 80,000-pound gross vehicle weight limit, and the Federal bridge formula. The Federal bridge formula is:

$$W=500\{[LN/(n-1)]+12N+36\}$$

where: W = the maximum weight in pounds that can be carried on a group of two or more axles to the nearest 500 pounds. L = the spacing in feet between the outer axles of any two or more axles. N = the number of axles being considered.

Why are the changes needed? Which shippers or producers would benefit from these changes, and to what extent do they benefit? How would the public benefit from these changes?

5. Should there be a specific Federal weight limit for tridem axles, as there are for single and tandem axles? (The allowable load on a tridem is now determined by Bridge Formula B and varies from 42,000, if the axles are

spread just over 8 feet, to 43,500 pounds, if the spread is 10 feet.)

6. Is there a need for Federal regulation of tire loads and pressures or other tire controls for the purpose of protecting highway pavements? How should they be specified?

7. If Federal vehicle weight limits were increased, should additional requirements be placed on the heavier vehicles and their operation? For which vehicles should such requirements be considered? Why are these requirements needed?

Size Limits

8. Should the present Federal vehicle size (length and width) limits be changed? If so, how should they be changed? Why are these changes needed? Which shippers or producers would benefit from these changes, and to what extent would they benefit? How would the public benefit from these changes?

9. If Federal vehicle size limits were increased, should additional requirements be placed on the larger vehicles and their operations? For which vehicles should such requirements be considered? Why are these requirements needed?

10. Presently, there are no Federal regulations governing truck height. Is there a need for a Federal vehicle height limit? If so, why is it needed?

Performance Standards

11. Could performance standards, such as ability to maintain a minimum speed, be used as a part of a new Federal TS&W policy? How would such standards achieve results at least equivalent to current size and weight limits and vehicle requirements? How could these standards be applied and enforced?

Grandfather Rights

12. Should State authority to claim grandfather rights under Federal TS&W provisions (including overweight permit authority) be left intact, frozen, or phased out? Why?

Permits

13. How does the extent of motor carrier operations under overweight permits compare to that for operations that do not require permits? What portion of the nondivisible load permits are issued routinely; that is, without an engineering review? Nonroutinely, with an engineering review? What portion of overweight permits are issued for divisible loads?

14. How do operations under the various types of permits vary by type of trucking operations and from one region of the country to another?

15. Should there be a Federal role in the permitting of overweight vehicles carrying divisible loads? What role? Why?

National Objectives

16. *Highway Safety:* Is there a Federal role in utilizing TS&W provisions to improve highway safety? What are appropriate vehicle performance standards for improving highway safety? What equipment specifications are needed for which vehicle combinations? What driver requirements (minimum age, training, or experience) are needed? Under what highway, traffic, and weather conditions should the operation of larger or heavier vehicles be restricted? Is a regional role or State role appropriate?

17. *Productivity Enhancement and International Trade:* What potential changes in Federal TS&W provisions could be used to facilitate interstate commerce? International trade? What types of vehicles are used in North American trade? What are the significant international freight movements in terms of commodity and origins and destination? How can the movement of International Standards Organization containers be facilitated? Are there changes in TS&W standards that would better facilitate North American trade and what are the expected benefits and costs?

18. *Intermodalism:* What Federal TS&W provisions could be used to facilitate the intermodal movement of freight where this is efficient? How do TS&W limits relate to the needs of other modes, especially rail and maritime?

19. *Environment:* Which potential changes in Federal TS&W provisions are consistent or inconsistent with local and State air quality improvement strategies? What effect would increased or decreased TS&W limits have on traffic noise and vibration?

20. *Energy Conservation:* Which potential changes to Federal TS&W provisions could be used to help conserve energy?

Carrier/Shipper Standards Setting

21. If you could, how would you change truck size and weight limits and related requirements or set performance standards to optimize your trucking or logistics operations? What are the bases for the limits and requirements or performance standards? How would the changes affect highway pavements and bridges and the national objectives mentioned above? In your response, please: (1) Describe your operations including commodities carried, equipment used, area of operation, amount of traffic, lengths of haul, and arrangements with your shippers and other carriers; and (2) evaluate the benefits that you and the public will realize from your proposed changes.

Special TS&W Provisions

22. Should there be separate TS&W provisions for special commodities or equipment such as hazardous materials, agricultural and forest products, other natural resources, intermodal containers and trailers, water and oil well drilling rigs, military vehicles, and automobile and boat transporters? Why? What benefits would be realized from the special provisions?

Exemptions from TS&W Standards

23. Should any vehicles that use federally-supported highways be exempt from Federal TS&W regulation (for example, military vehicles)? Why? What benefits would be realized from the exemptions?

Authority: 23 U.S.C. 315; 49 U.S.C. 301, 302, 305; Pub. L. 102–548, 106 Stat. 3646.

Issued On: January 26, 1995.

Rodney E. Slater,

Federal Highway Administrator.

[FR Doc. 95–2533 Filed 02–01–95; 8:45 am]

BILLING CODE 4910–22–P

DEPARTMENT OF THE TREASURY

Public Information Collection Requirements Submitted to OMB for Review

January 23, 1995.

The Department of Treasury has submitted the following public information collection requirement(s) to OMB for review and clearance under the Paperwork Reduction Act of 1980, Public Law 96–511. Copies of the submission(s) may be obtained by calling the Treasury Bureau Clearance Officer listed. Comments regarding this information collection should be addressed to the OMB reviewer listed and to the Treasury Department Clearance Officer, Department of the Treasury, Room 2110, 1425 New York Avenue, NW., Washington, DC 20220.

Bureau of the Public Debt (BPD)

OMB Number: 1535–0062.

Form Number: PD F 2966.

Type of Review: Extension.

Title: Special Bond of Indemnity to the United States of America.

Description: This form is used by the purchaser of savings bonds in a chain letter scheme to request refund of the purchase price of the bonds.

Respondents: Individuals or households.

Estimated Number of Respondents: 5,000.

Estimated Burden Hours Per Response: 8 minutes.

Frequency of Response: On occasion.

Estimated Total Reporting Burden: 665 hours.

Clearance Officer: Vicki S. Ott (304) 480–6553, Bureau of the Public Debt, 200 Third Street, Parkersburg, West VA 26106–1328.

OMB Reviewer: Milo Sunderhauf (202) 395–7340, Office of Management and Budget, Room 10226, New Executive Office Building, Washington, DC 20503.

Lois K. Holland,

Departmental Reports Management Officer.

[FR Doc. 95–2527 Filed 2–1–95; 8:45 am]

BILLING CODE 4810–40–P

Public Information Collection Requirements Submitted to OMB for Review

January 26, 1995.

The Department of Treasury has submitted the following public information collection requirement(s) to OMB for review and clearance under the Paperwork Reduction Act of 1980, Public Law 96–511. Copies of the submission(s) may be obtained by calling the Treasury Bureau Clearance Officer listed. Comments regarding this information collection should be addressed to the OMB reviewer listed and to the Treasury Department Clearance Officer, Department of the Treasury, Room 2110, 1425 New York Avenue, NW., Washington, DC 20220.

Financial Management Service (FMS)

OMB Number: 110–0059.

Form Number: SF 5510.

Type of Review: Extension.

Title: Authorization Agreement for Preauthorized Payment.

Description: Preauthorized payment is used by remitters (individuals and corporations) to authorize electronic fund transfers from the bank accounts maintained at financial institutions for government agencies to collect monies.

Respondents: Individuals or households, business or other for- profit, Federal Government.

Estimated Number of Respondents: 100,000.

Estimated Burden Hours Per Response: 15 minutes.

Frequency of Response: On occasion.

Estimated Total Reporting Burden: 25,000 hours.

Clearance Officer: Jacqueline R. Perry (301) 344–8577, Financial Management Service, 3361–L 75th Avenue, Landover, MD 20785.

OMB Reviewer: Milo Sunderhauf (202) 395–7340, Office of Management and Budget, Room 10226, New Executive Office Building, Washington, DC 20503.

Lois K. Holland,

Departmental Reports Management Officer.

[FR Doc. 95–2526 Filed 2–1–95; 8:45 am]

BILLING CODE 4810–35–P

Public Information Collection Requirements Submitted to OMB for Review.

January 26, 1995.

The Department of the Treasury has submitted the following public information collection requirement(s) to OMB for review and clearance under the Paperwork Reduction Act of 1980, Public Law 96–511. Copies of the submission(s) may be obtained by calling the Treasury Bureau Clearance Officer listed. Comments regarding this information collection should be addressed to the OMB reviewer listed and to the Treasury Department Clearance Officer, Department of the Treasury, Room 2110, 1425 New York Avenue, NW., Washington, DC 20220.

SPECIAL REQUEST: In order to conduct the survey described below on February 6, 1995, the Department of the Treasury is requesting Office of Management and Budget (OMB) review and approve this information collection by February 3, 1995. To obtain a copy of this survey, please contact the IRS Clearance Officer at the address listed below.

Internal Revenue Service (IRS)

OMB Number: 1545–1432.

Survey Project Number: IRS PC:V 95–003–G.

Type of Review: Revision.

Title: Mission Customer Profile Survey.

Description: The purpose of this survey is to profile the existing customer base, to ascertain how respondents learned about the Mission or VITA locations, and to receive suggestions for alternative or additional locations. The profiles from each site will be compared to each other, and all profiles will be compared to zip-code-area demographic information received from various service and public transportation agencies in the area. This survey will be distributed to taxpayers visiting the Wichita, Kansas District walk-in counters at the Mission Pos of Duty (POD) and three VITA sites in Oak Park, Antioch, and Wyandotte County.

Respondents: Individuals or households, businesses or other for-profit, small businesses or organizations

Estimated Number of Respondents: 980.

Estimated Burden Hours Per Respondent: 2 minutes.

Frequency of Response: Other.

Estimated Total Reporting Burden: 33 hours.

Clearance Officer: Garrick Shear (202) 622–3869, Internal Revenue Service, Room 5571, 1111 Constitution Avenue, N.W., Washington, DC 20224.

OMB Reviewer: Milo Sunderhauf (202) 395–7340, Office of Management and Budget, Room 10226, New Executive Office Building, Washington, DC 20503.

Lois K. Holland,

Departmental Reports Management Officer.

[FR Doc. 95–2528 Filed 2–1–95; 8:45 am]

BILLING CODE 4830–01–P

Public Information Collection Requirements Submitted to OMB for Review.

January 26, 1995.

The Department of Treasury has submitted the following public information collection requirement(s) to OMB for review and clearance under the Paperwork Reduction Act of 1980, Public Law 96–511. Copies of the submission(s) may be obtained by calling the Treasury Bureau Clearance Officer listed. Comments regarding this information collection should be addressed to the OMB reviewer listed and to the Treasury Department Clearance Officer, Department of the Treasury, Room 2110, 1425 New York Avenue, NW., Washington, DC 20220.

Internal Revenue Service (IRS)

OMB Number: 1545–0073.

Form Number: IRS Form 1310.

Type of Review: Revision.

Title: Statement of Person Claiming Refund Due a Deceased Taxpayer.

Description: Form 1310 is used by a claimant to secure payment of a refund on behalf of a deceased taxpayer. The information enables IRS to send the refund to the correct person.

Respondents: Individuals or households.

Estimated Number of Respondents/Recordkeepers: 7,500.

Estimated Burden Hours Per Respondent/Recordkeeper:

Recordkeeping—7 min.

Learning about the law or the form—3 min.

Preparing the form—16 min.

Copying, assembling, and sending the form to the IRS—17 min.

Frequency of Response: On occasion

Estimated Total Reporting/Recordkeeping Burden: 5,325 hours

OMB Number: 1545–0148.

Form Number: IRS Form 2758.

Type of Review: Revision.

Title: Application for Extension of Time to File Certain Excise, Income, Information, and Other Returns.

Description: Internal Revenue Code (IRC) 6081 permits the Secretary of the Treasury to grant a reasonable extension of time for filing any return, declaration, statement, or other document. This form is used by U.S. partnerships, fiduciaries, and certain organizations, to request an extension of time to file their returns. The information is used to determine whether the extension should be granted.

Respondents: Business or other for-profit, non-for-profit institutions.

Estimated Number of Respondents/Recordkeepers: 300,000

Estimated Burden Hours Per Respondent/Recordkeeper:

Recordkeeping—3 hr., 35 min.

Learning about the law or the form—6 min.

Preparing and sending the form to the IRS—10 min.

UNITED STATES INFORMATION AGENCY

Culturally Significant Objects Imported for Exhibition; Determination

Notice is hereby given of the following determination: Pursuant to the authority vested in me by the Act of October 19, 1965 (79 Stat. 985, 22 U.S.C. 2459), Executive Order 12047 of March 27, 1978 (43 FR 13359, March 29, 1978), and Delegation Order No. 85–5 of June 27, 1985 (50 FR 27393, July 2, 1985), I hereby determine that the objects in the exhibit ''Imperial Tombs of China'' (see list [1]), imported from abroad for the temporary exhibition without profit within the United States, are of cultural significance. These objects are imported pursuant to a loan agreement with the foreign lender. I also determine that the temporary exhibition of the objects at The Memphis International Cultural Series Grand Exhibition Hall, Memphis, Tennessee, from on or about September 18, 1995, and the Museum of Art, Brigham Young University, Provo, Utah, from on or about November 1, 1995, to on or about March 17, 1996 and The Portland Museum of Art, Portland, Oregon, from on or about May 1, 1996, to on or about September 15, 1996, and The Denver Museum of Natural History, Denver, Colorado, from on or about November 1, 1996, to on or about March 17, 1997, is in the national interest.

Public notice of this determination is ordered to be published in the **Federal Register**.

Dated: January 26, 1995.

Les Jin,

General Counsel.

[FR Doc. 95–2512 Filed 2–1–95; 8:45 am]

BILLING CODE 8230–01–M

[1] A copy of this list may be obtained by contacting Ms. Lorie Nierenberg of the Office of the General Counsel of USIA. The telephone number is 202/619–6084 and the address is U.S. Information Agency, 301 Fourth Street, SW., Room 700, Washington, DC 20547.

Frequency of Response: On occasion.

Estimated Total Reporting/Recordkeeping Burden: 1,155,000 hours.

OMB Number: 1545–0742.

Regulation ID Number: EE–111–80 (T.D. 8019) Final

Type of Review: Extension.

Title: Public Inspection of Exempt Organizations' Return.

Description: Section 6104(b) authorizes the Internal Revenue Service to make available to the public the returns required to be filed by exempt organizations. The information requested in Treasury Regulation § 301.6104(b)–1(b)(4) is necessary in order for the Service not to disclose confidential business information furnished by businesses which contribute to exempt black lung trusts.

Respondents: Business or other for-profit.

Estimated Number of Respondents/Recordkeepers: 22.

Estimated Burden Hours Per Respondent/Recordkeeper: 1 hour.

Frequency of Response: Annually.

Estimated Total Reporting/Recordkeeping Burden: 22 hours.

OMB Number: 1545–0889.

Form Number: IRS Forms 8275 and 8275–R.

Type of Review: Extension.

Title: Disclosure Statement and Regulation Disclosure Statement.

Description: Internal Revenue Code (IRS) section 6662 imposes accuracy related penalties for substantial understatement of tax liability or negligence or disregard of rules and regulations. Section 6694 imposes similar penalties on return preparers. Regulations 1.6662–4(e)&(f) provide for reduction of these penalties if adequate disclosure of the tax treatment is made on Form 8275 or it the position is contrary to a regulation, Form 8275–R.

Respondents: Individuals or households, Business or other for-profit, Non-for-profit institutions, Farms.

Estimated Number of Respondents/Recordkeepers: 595,000.

Estimated Burden Hours Per Respondent/Recordkeeper:

	Form 8275	Form 8275–R
Recordkeeping	2 hr., 23 min.	3 hr., 38 min.
Learning about the law or the form.	35 min.	24 min.
Preparing and sending the form to the IRS.	40 min.	27 min.

Frequency of Response: Annually.

Estimated Total Reporting/Recordkeeping Burden: 3,560,000 hours.

Clearance Officer: Garrick Shear (202) 622–3869, Internal Revenue Service, Room 5571, 1111 Constitution Avenue, N.W., Washington, DC 20224.

OMB Reviewer: Milo Sunderhauf (202) 395–7340, Office of Management and Budget, Room 10226, New Executive Office Building, Washington, DC 20503.

Lois K. Holland,

Departmental Reports Management Officer.

[FR Doc. 95–2529 Filed 2–1–95; 8:45 am]

BILLING CODE 4830–01–P

Foreign Language and Area Studies—U.S. Students and Scholars; Request for Proposals

ACTION: Notice—Request for proposals.

SUMMARY: The Office of Academic Programs of the United States Information Agency's Bureau of Educational and Cultural Affairs announces an open competition for an assistance award. Public and private non-profit organizations with experience in international academic exchange activities, meeting the provisions described in IRS regulation 501(c)(3) may apply to develop and administer programs in cooperation with USIA that will assist U.S. citizens who are graduate students and postdoctoral scholars in North African, Middle Eastern and South Asian Studies. Activities permitted under this program include foreign language training, foreign area studies and foreign area research for periods ranging from two to twenty-four months abroad.

Overall grant-making authority for this program is contained in the Mutual Educational and Cultural Exchange Act of 1961, Public Law 87–256, as amended, also known as the Fulbright-Hays Act. The purpose of the Act is ''to enable the Government of the United States to increase mutual understanding between the people of the United States and the people of other countries * * *; to strengthen the ties which unite us with other nations by demonstrating the

educational and cultural interests, developments, and achievements of the people of the United States and other nations * * * and thus to assist in the development of friendly, sympathetic and peaceful relations between the United States and the other countries of the world.''

The funding authority for the specific program cited above is provided through the Near and Middle East Research and Training Act (Pub. L. 102–138 Section 228 as amended by Pub. L. 103–236 Section 233).

Programs and projects must conform with Agency requirements and guidelines outlined in the Solicitation Package. USIA projects and programs are subject to the availability of funds.

For the purpose of this program, the geographic area refers to the region consisting of countries and peoples covered by the Bureau of Near Eastern and South Asian Affairs of the U.S. Department of State as of October 1991, and Turkey.

Current eligible locales for overseas research are: Mauritania, Morocco, Tunisia, Egypt, Israel, the West Bank, Jordan, Syria, Turkey, Saudi Arabia, Kuwait, United Arab Emirates, Bahrain, Oman, Qatar, Yemen, Pakistan, India, Sri Lanka, Bangladesh, and Nepal.

Funding of proposals for the above places is subject to official security and/or travel restrictions.

NMERTA grantees are not eligible for USIA's health and accident insurance coverage. Grantees are required to provide proof of insurance to the grant-making organizations before fellowship funds can be released. Health and accident, MEDEVAC and repatriation insurance is recommended.

ANNOUNCEMENT NAME AND NUMBER: All communications with USIA concerning this announcement should refer to the above title and reference number E/AEN–95–01.

DATES: Deadline for proposals: All copies must be received at the U.S. Information Agency by 5 p.m. Washington, D.C. time on Friday, April 7, 1995. Faxed documents will not be accepted, nor will documents postmarked April 7, 1995, but received at a later date. It is the responsibility of each applicant to ensure that proposals are received by the above deadline. Grants should begin no earlier than September 1, 1995, and no later than October 1, 1995, and end no later than 24 months thereafter.

FOR FURTHER INFORMATION CONTACT: Qualified U.S. organizations should write, call, fax or e-mail John Sedlins or Janice Daniel to request a Solicitation Package. The following are our various contact points: North Africa, Middle East and South Asia Branch, E/AEN, Room 212, U.S. Information Agency, 301 4th Street, S.W., Washington, D.C. 20547, telephone number (202) 619–5368, fax number (202) 205–2466, internet address JSEDLINS@USIA.GOV or JDANIEL@USIA.GOV. The Solicitation Package includes more detailed award criteria; all application forms; and guidelines for preparing proposals, including specific criteria for preparation of the proposal's budget. Please specify USIA Senior Program Officer John Sedlins on all inquiries and correspondences. Interested applicants should read the complete **Federal Register** announcement before addressing inquiries to the North Africa, Middle East and South Asia Branch or submitting their proposals. Once the RFP deadline has passed, the Branch may not disclose this competition in any way with applicants until the Bureau proposal review process has been completed.

ADDRESSES: Applicants must follow all instructions given in the Solicitation Package. The original and nine copies of the complete application should be sent to: U.S. Information Agency, Ref.: E/AEN–95–01, Office of Grants Management, E/XE, Room 336, 301 4th Street, S.W., Washington, D.C. 20547.

Applicants are also encouraged to submit a copy of their proposal on a 3½ inch, ASCII–formatted diskette. A brief cover letter should accompany the diskette indicating the software used in preparing the proposal.

SUPPLEMENTARY INFORMATION: Pursuant to the Bureau's authorizing legislation, programs must maintain a non-political character and should be balanced and representative of the diversity of American political, social, and cultural life. ''Diversity'' should be interpreted in the broadcast sense and encompass differences including, but not limited to race, gender, religion, geographic location, socio-economic status, and physical challenges. Applicants are strongly encouraged to adhere to the advancement of this principle.

Overview: Pursuant to the Agency's authorizing legislation, (the Fulbright-Hays Act, Public Law 87–256), programs must maintain a non-political character and should be balanced and representative of the diversity of American political, social and cultural life.

Support is offered for two categories. Organizations may address one or both categories, but must submit a separate proposal for each category. Special emphasis will be given to the social sciences and humanities.

Category A—Pre-doctoral students. Organizations that are awarded funding shall solicit and receive applications from U.S.-citizen, graduate students nationwide who seek to conduct overseas study and research in the eligible locales listed above. Eligible fields of study and research shall be open to students of all disciplines with a new or established interest in topics requiring study or research in the geographic area(s). Eligibility shall be restricted to applicants who have a baccalaureate degree and who are already enrolled in graduate-level academic programs.

Category B—Postdoctoral scholars. Organizations that are awarded funding shall solicit and receive applications from U.S.-citizen, postdoctoral scholars nationwide who seek to conduct overseas study and research in the eligible locales listed above. Eligible fields of study and research shall be open to scholars of all disciplines with a new or established interest in topics requiring study or research in the geographic area(s). Eligibility shall be restricted to applicants who have a Ph.D. and who have postdoctoral college or university teaching experience.

Guidelines: In preparing a proposal, organizations should address the subjects of program design and scheduling, as well as program administration. At a minimum, a successful proposal should clearly cover publicity, selection process, orientation for participants, and logistical and scheduling measures. A basic plan for post-program follow-up and evaluation should also be included. The proposal must be typewritten and double-spaced and may not exceed twenty (20) pages, including budget attachments.

Proposed budget: Applicants must submit a comprehensive, line-item budget for the entire program, the details and format of which are contained in the application packet.

Awards will not exceed $350,000. Grants awarded to eligible organizations with less than four years of experience in conducting international exchange programs will be limited to $60,000.

There must be a summary budget as well as a break-down reflecting both the administrative budget and the program budget. The budget should list all sources of support for the program including both cash and in-kind contributions. For better understanding or further clarification, applicants may provide separate sub-budgets for each program component, phase, location, or activity in order to facilitate USIA decisions on funding.

Budget guidelines apply to both categories A and B described above.

Allowable program costs include, but are not limited to, the following:

(1) Roundtrip international travel via an American flag carrier;

(2) Domestic travel;

(3) Maintenance and per diem;

(4) Academic program costs (e.g. book allowance);

(5) Orientation costs (speaker honoraria are not to exceed $150 per day per speaker);

(6) Cultural enrichment costs (admissions, tickets, etc.);

(7) USA-based administration costs (e.g. advertisement, recruitment and selection costs).

Administrative costs are not to exceed 20 percent of the requested budget. Cost-sharing is encouraged.

Please refer to the Solicitation Package for complete budget guidelines and formatting instructions.

Review Process

USIA will acknowledge receipt of all proposals and will review them for technical eligibility. Proposals will be deemed ineligible if they do not fully adhere to the guidelines stated herein and in the Solicitation Package. Eligible proposals will be forwarded to panels of USIA officers for advisory review. All eligible proposals will be reviewed by the Agency contracts office, as well as the appropriate USIA Area Office and the USIA post overseas, where appropriate. Proposals may also be reviewed by the Office of the General Counsel or by other Agency elements. Funding decisions are at the discretion of the USIA Associate Director for Educational and Cultural Affairs. Final technical authority for assistance awards (grants or cooperative agreements) resides with the USIA grants officer.

Review Criteria

Technically eligible applications will be competitively reviewed according to the criteria stated below. These criteria are not rank ordered and all carry equal weight in the proposal evaluation:

1. Quality of the program idea: Proposals should exhibit originality, substance, precision, and relevance to Agency mission.

2. Program planning: Detailed agenda and relevant work plan should demonstrate substantive undertakings and logistical capacity. Agenda and plan should adhere to the program overview and guidelines described above.

3. Ability to achieve program objectives: Objectives should be reasonable, feasible, and flexible. Proposals should clearly demonstrate how the institution will meet the program's objectives and plan.

4. Multiplier effect/impact: Proposed programs should strengthen long-term mutual understanding, including maximum sharing of information and establishment of long-term institutional and individual linkages.

5. Support of Diversity: Proposals should demonstrate the recipient's commitment to promoting the awareness and understanding of diversity.

6. Institutional Capacity: Proposed personnel and institutional resources should be adequate and appropriate to achieve the program or project's goals.

7. Institution's Record/Ability: Proposals should demonstrate an institutional record of successful exchange programs, including responsible fiscal management and full compliance with all reporting requirements for past Agency grants as determined by USIA's Office of Contracts. The Agency will consider the past performance of prior recipients and the demonstrated potential of new applicants.

8. Follow-on Activities: Proposals should provide a plan for continued follow-on activity (without USIA support) which insures the USIA-supported programs are not isolated events.

9. Project Evaluation: Proposals should include a plan to evaluate the activity's success, both as the activities unfold and at the end of the program. USIA recommends that the proposal include a draft survey questionnaire or other technique plus description of a methodology to use to link outcomes to original project objectives. Award-receiving organizations/institutions will be expected to submit intermediate reports after each project component is concluded or quarterly, whichever is less frequent.

10. Cost-effectiveness: The overhead and administrative components of the proposal, including salaries and honoraria, should be kept as low as possible. All other items should be necessary and appropriate.

11. Cost-sharing: Proposals should maximize cost-sharing through other private sector support as well as institutional direct funding contributions.

12. Value to U.S.-Partner Country Relations: proposed projects should receive positive assessments by USIA's geographic area desk and overseas officers of program need, potential impact, and significance in the partner country(ies).

Notice

The terms and conditions published in this RFP are binding and may not be modified by any USIA representative. Explanatory information provided by the Agency that contradicts published language will not be binding. Issuance of the RFP does not constitute an award commitment on the part of the Government. The needs of the program may require the award to be reduced, revised, or increased. Final awards cannot be made until funds have been appropriated by Congress, allocated and committed through internal USIA procedures.

Notification

All applicants will be notified of the results of the review process on or about August 11, 1995. Awards made will be subject to periodic reporting and evaluation requirements.

Dated: January 27, 1995.

Dell Pendergrast,

Deputy Associate Director, Educational and Cultural Affairs.

[FR Doc. 95–2571 Filed 2–1–95; 8:45 am]

BILLING CODE 8230–01–M

Sunshine Act Meetings

Federal Register

Vol. 60, No. 22

Thursday, February 2, 1995

This section of the FEDERAL REGISTER contains notices of meetings published under the "Government in the Sunshine Act" (Pub. L. 94-409) 5 U.S.C. 552b(e)(3).

FEDERAL ELECTION COMMISSION

DATE AND TIME: Tuesday, February 7, 1995 at 10:00 a.m.

PLACE: 999 E Street, NW., Washington, DC.

STATUS: This Meeting Will Be Closed to the Public.

ITEMS TO BE DISCUSSED:

Compliance matters pursuant to 2 U.S.C. § 437g.
Audits conducted pursuant to 2 U.S.C. § 437g, § 438(b), and Title 26, U.S.C.
Matters concerning participation in civil actions or proceedings or arbitration
Internal personnel rules and procedures or matters affecting a particular employee

DATE AND TIME: Thursday, February 9, 1995 at 10:00 a.m.

PLACE: 999 E Street, NW., Washington, DC. (Ninth Floor).

STATUS: This Meeting Will be Open to the Public.

ITEMS TO BE DISCUSSED:

Correction and Approval of Minutes
Advisory Opinion 1994–38: Jonathan S. Fuhrman on behalf of the Lucille Roybal-Allard Campaign Committee
Advisory Opinion 1995–1: Arthur R. Block
Administrative Matters

PERSON TO CONTACT FOR INFORMATION: Mr. Ron Harris, Press Officer, Telephone: (202) 219–4155.

Delores Hardy,

Administrative Assistant.

[FR Doc. 95–2739 Filed 1–31–95; 3:20 pm]

BILLING CODE 6715–01–M

Corrections

Federal Register

Vol. 60, No. 22

Thursday, February 2, 1995

This section of the FEDERAL REGISTER contains editorial corrections of previously published Presidential, Rule, Proposed Rule, and Notice documents. These corrections are prepared by the Office of the Federal Register. Agency prepared corrections are issued as signed documents and appear in the appropriate document categories elsewhere in the issue.

OFFICE OF PERSONNEL MANAGEMENT

5 CFR Parts 211 and 353

RIN 3206–AG18

Federal Staffing Provisions Supporting Sunset of the Federal Personnel Manual

Correction

In rule document 95–830 beginning on page 3055 in the issue of Friday, January 13, 1995, make the following corrections:

§ 211.102 [Corrected]

1. On page 3056, in the third column, in § 211.102(a)(3), in the second line, ''1995'' should read ''1955''.

§ 353.103 [Corrected]

2. On page 3064, in the second column, in § 353.103(a)(2), in the first line, ''with'' should read ''without''.

BILLING CODE 1505–01–D

OFFICE OF PERSONNEL MANAGEMENT

5 CFR Part 430

RIN 3206-AG34

Performance Management

Correction

In proposed rule document 95–2109 beginning on page 5542 in the issue of Friday, January 27, 1995, make the following corrections:

On page 5548, in the table:

1. In the second column, in the fourth line, ''§ 430.209(3)'' should read ''§ 430.209(e)''.

2. In the same column, in the sixth line, ''§ 430.207(c)()'' should read ''§ 430.207(c)(2)''

3. In the 3rd column, in the 29th line from the bottom, ''requirements'' should read ''requirement''.

4. In the same column, in the 23rd line from the bottom, ''greater'' was misspelled.

BILLING CODE 1505–01–D

SECURITIES AND EXCHANGE COMMISSION

[Release No. 34-35247; International Series Release No. 774 File No. SR-CBOE-95-01]

Self-Regulatory Organizations; Notice of Filing of Proposed Rule Change by the Chicago Board Options Exchange, Inc. Relating to the Listing of Warrants on the Duetscher Aktien Index (''DAX Index'')

Correction

In notice document 95–1979 beginning on page 5233 in the issue of Thursday, January 26, 1995, make the following correction:

On page 5235, in the first column, insert the following before the FR Doc. line:

Margaret McFarland,

Deputy Secretary.

BILLING CODE 1505–01–D

federal register

Thursday
February 2, 1995

Part II

Department of Health and Human Services

Administration on Aging

Final Agenda for the 1995 White House Conference on Aging; Notice

DEPARTMENT OF HEALTH AND HUMAN SERVICES

Administration on Aging

Final Agenda for the 1995 White House Conference on Aging

AGENCY: White House Conference on Aging, AoA, HHS.

ACTION: Notice of final agenda.

SUMMARY: The Policy Committee on the White House Conference on Aging is publishing the final agenda for the May 1995 Conference. To formulate this final agenda, the Policy Committee used public comments received on the proposed agenda published October 12, 1994, in the **Federal Register** and recommendations emanating from several hundred pre-conference events held around the country. Part I of the final agenda is an overview of the comments received on the proposed agenda; Part II covers the Conference theme, Part III specifies the issues and subissues for which resolutions are to be developed and the structure of the Conference program; and the final section, Part IV, describes the process to be used to develop and pass resolutions at the Conference.

FOR FURTHER INFORMATION CONTACT: White House Conference on Aging, 501 School Street, SW., 8th Floor, Washington, DC 20024–2755. The main telephone number for the Conference is (202) 245–7116 and the FAX number is (202) 245–7857. The INTERNET address (CONFERENCE@BAN–GATE.AOA.DHHS.GOV) may also be used.

SUPPLEMENTARY INFORMATION: Immediately after President Clinton formally called for the 1995 White House Conference on Aging (WHCoA) in February 1994, solicitation from a wide range of sources—especially from the grassroots—of suggestions and ideas for the Conference agenda began. A main source of this input has been more than 600 recognized activities, events and programs that have been held or will be held around the country as a prelude to the May Conference in Washington, DC. Other major sources have been the public comments on the proposed agenda and the letters received from States, individuals, and public and private organizations.

From the recognized events that have been held, over 300 reports have been received detailing the policy recommendations generated from the events. Input received from this variety of local, state, regional and national events conducted on behalf of the WHCoA over the past ten months points toward an agenda that goes beyond traditional boundaries and paints a broad picture of aging—an agenda that looks at the present and the future. This Conference should examine the needs and contributions of today's and tomorrow's older citizens. The specific issues addressed by the recommendations parallel the public comments received on the proposed agenda.

The Older Americans Act Amendments of 1992, Public Law 102–375, required that the Policy Committee (which oversees the 1995 White House Conference on Aging) formulate and approve a proposed agenda for the Conference and that this proposed agenda be published in the **Federal Register** for public comment. The proposed agenda was published on October 12 and the comment period closed approximately seven weeks later on December 1. More information on the comments is provided in Part I.

The main goal of the 1995 WHCoA is to provide resolutions to influence national aging policy and to develop a blueprint for action to have these resolutions implemented. This Conference, the last one of this century, will have a major impact on aging concerns into the 21st century. To focus the impact of the WHCoA on those issues of overwhelming concern, the number of resolutions presented to the Conference delegates for passage will be limited. The process for development and passage of resolutions is described in Part IV.

Part I. Comments on the Proposed Agenda

This part of the final agenda provides information on the comments received on the proposed agenda published in the **Federal Register**. The proposed agenda included four proposed themes for the Conference from which a final theme would emerge based primarily on public comments and a listing of major issues and subissues.

Written comments on the proposed agenda formulated and approved by the Policy Committee were received from 915 individuals and organizations. Fifty-nine percent of the comments came from individuals, many of them older citizens.

Approximately one-half of the commenters responded to the request for comments on a theme for the Conference. They indicated their preferences among the four proposed themes, combined elements of the four proposed themes or proposed different themes. The responses tabulated as follows:

Themes	Responses
"Aging into the 21st Century: Generations Working Together for a Better Community"	89
"Investing in an Aging Society into the 21st Century: Independence, Opportunity and Dignity for All Americans"	42
"Investing Now in America's Future: A Lifetime of Productivity and Opportunity"	52
"America Now and into the 21st Century: Growing Older with Independence, Opportunity and Dignity"	163
Other (combined elements or proposed new theme)	108

Comments focused on the need to look ahead to the future, the interdependence among generations, the importance of maintaining independence and dignity as one ages and the options and opportunities that need to be present throughout life.

In the proposed agenda published in the **Federal Register**, commenters were asked to indicate the relative importance of the issues and subissues and to provide on how they might be linked. The comments received provided information on the specific issue or issues which were of paramount concern to commenters or their organizations. The tabulation of responses on the 19 issues listed in the proposed agenda for the Conference resulted in the following rank order of the issues:

1. Health.
2. Income security and other benefits.
3. Housing/social and community services.
4. Crime/personal safety.
5. Interdependence of generations.
6. Quality of life/meaning in later years.
7. Special constituencies.
8. Productive older people.
9. Employment.
10. Older Americans Act and its role.
11. Transportation.
12. Rights/responsibility/advocacy Arts and humanities.
13. Image of older people.
14. Research and education/training.
15. Cultural diversity.
16. Family and family life.
17. Role of the private sector.
18. Technology.

"Health" was an overwhelming concern of the commenters. The "health" issue received more than twice as many comments as the second ranked issue, "Income security and other benefits." Another common concern of the commenters was combining housing and social and community services.

Many commenters thought housing issues should be considered separately from services.

Numerous commenters were concerned about the number of issues covered in the proposed agenda and the ability of delegates to deal with this vast array of issues. These commenters suggested limiting the number of issues to be addressed at the Conference to those considered most pressing and provided guidance on the issues they thought met this criterion. There were a number of very thoughtful letters suggesting how the issues and subissues could be linked both for discussion and for development of resolutions at the Conference.

Part II. Conference Theme

The Policy Committee decided on a theme that combined aspects of the two top-ranked proposed themes. The theme for the Conference is: ''America Now and into the 21st Century: Generations Aging Together with Independence, Opportunity and Dignity.''

Part III. Issues To Be Addressed at the Conference and the Structure of the Conference Program

This part of the notice addresses both the issues to be covered in the final agenda and the structure of the Conference program in which the issues are to be discussed and resolutions passed.

After considerable deliberation, the Policy Committee narrowed the focus of the Conference to four issues with several cross-cutting concerns which are to permeate both the discussion of the issues and the resolutions process. In the view of the members of the Policy Committee, these four issues are the ones considered most pressing and critical to aging policy based on the comments received on the proposed agenda and the recommendations generated by pre-conference events.

The attention to be focused on these four issues does not deny the importance of other issues and subissues included in the proposed agenda. However, the Policy Committee agreed with commenters that it would not be possible to cover adequately all these issues within the context of a three day conference and they made the decision to concentrate on core issues.

The list below specifies the four issues and the subissues to be covered under each issue. For each issue, cross-cutting concerns are repeated to emphasize their importance to the discussion of each issue. In addition, the relevant current Federal programs are named for each issue.

The four major issues and subissues determined by the Policy Committee are:

Assuring Comprehensive Health Care Including Long-Term Care

- Promotion and prevention.
- Access to quality care.
- Continuum of care intergrating community and social services.
- Medicare/Medicard/Older Americans Act.
- Research and education.

Cross-cutting concerns: Interdependence among generations and among members of extended families, and the responsibility of individuals to plan for changes that will occur throughout their lifespan; Unique contributions and needs of special populations, especially veterans, caregivers (including grandparents), rural elderly, women, minorities and individuals with disabilities

Current Federal programs: Medicare (Title XVIII of the Social Security Act), Medicaid (Title XIX of the Social Security Act), Older Americans Act, Veterans Health Benefits (Chapter 17, Title 38), Social Services Block Grant, food stamps, NIH programs

Promoting Economic Security

- Employment.
- Social Security.
- Other retirement income and resources, including pension reform.
- Poverty and hunger.
- Tax policy.
- Discrimination.

Cross-cutting concerns: Interdependence among generations and among members of extended families, and the responsibility of individuals to plan for changes that will occur throughout their lifespan; Unique contributions and needs of special populations, especially veterans, caregivers (including grandparents), rural elderly, women, minorities and individuals with disabilities

Current Federal programs: Social Security (Title II of the Social Security Act: Old-age, Survivors, and Disability Insurance Benefits), Supplemental Security Income (Title XVI of the Social Security Act: Supplemental Security Income for the Aged, Blind and Disabled), Older Americans Act, Veterans Compensation and Pensions (Chapter 11, Title 38), vocational rehabilitation, adult education, Job Training Partnership Act, Age Discrimination in Employment Act, Employment Retirement Income Security Act

Maximizing Housing and Support Service Options

- Range of options/availability.
- Affordability/financing/tax policies.
- Linking support services to housing.
- Consumer choice/decision-making/promoting independence.

Cross-cutting concerns: Interdependence among generations and among members of extended families, and the responsibility of individuals to plan for changes that will occur throughout their lifespan; Unique contributions and needs of special populations, especially veterans, caregivers (including grandparents), rural elderly, women, minorities and individuals with disabilities

Current Federal programs: Public and Indian housing; section 202, Capital Advances for Housing the Elderly and section 811, Housing for the Disabled; section 231, Mortgage Insurance for Housing the Elderly; section 221(d) (3) and (4), Mortgage Insurance for Nursing Homes, Intermediate Care Facilities, and Board and Care Homes; section 236, Mortgage Interest Reduction Payments; Congregate Housing Services Program; Flexible Subsidy and Loan Management Set-aside Funding; Manufactured Home Parks; Home Equity Conversion Mortgage Insurance Demonstration; section 8, Rental Certificates and Rental Vouchers; Home Investment Partnership; Emergency Shelter Grants Program; Supportive Housing Demonstration Program; Farmers Home Administration housing; low-income home energy assistance; Community Service Block Grant; Community Development Block Grant; VA home loan programs (Chapter 37, Title 38)

Maximizing Options for a Quality Life

- Resources for elders (community and social services/activities).
- Crime, personal safety and elder abuse.
- Spiritual well-being, ethics, values and roles.
- Image and roles of older people.
- Elders as resources and opportunities for volunteering.
- Isolation and loneliness.
- Legal issues.

Cross-cutting concerns: Interdependence among generations and among members of extended

families, and the responsibility of individuals to plan for changes that will occur throughout their lifespan; Unique contributions and needs of special populations, especially veterans, caregivers (including grandparents), rural elderly, women, minorities and individuals with disabilities

Current Federal programs: Older Americans Act, Social Services Block Grant, National Senior Service Corps, Violent Crime Control and Law Enforcement Act of 1994

Background papers on these issues will be provided to delegates in advance of the Conference to allow them to prepare for and actively participate in the Conference.

To develop a structure for the Conference program, the Policy Committee was guided by the following principles:

- Each delegate shall have an opportunity to participate in discussion/resolution development of several issues so that he/she can see the interrelationships among the issues;
- These opportunities shall be provided in smaller group settings of delegates;
- At least three hours are needed for substantive discussion of an issue; and
- Time and space shall be provided for caucuses by special constituencies/populations.

Based on these principles, the following structure for the Conference evolved:

Date and time	Activity
Tuesday, May 2—7:00 p.m.–?	Brief opening/speak out.
Wednesday, May 3:	
9:00 a.m.–11:00a.m.	Formal opening session.
11:30 a.m.–1:00 p.m.	Special constituency caucuses.
2:00 p.m.–5:00 p.m.	First issue resolution development session.
Evening	Delegates on their own.
Thursday, May 4:	
8:30 a.m.–11:30 a.m.	Second issue resolution development session.
Noon–1:00 p.m.	Special constituency caucuses.
1:30 p.m.–4:30 p.m.	Third issue resolution development session.
5:00 p.m.–7:00 p.m.	Special constituency caucuses.
Evening	Plenary session (tentative).
Friday, May 5:	
7:00 a.m.–9:00 a.m.	Initial voting to determine the 40 priority resolutions.
10:00 a.m.–11:30 a.m.	Plenary session to adopt the 40 priority resolutions and consider delegate resolutions.
11:30 a.m.–Noon	Closing session.

Each delegate will have the opportunity to participate in three issue resolution development sessions. All four issues and subissues are to be offered concurrently at each of the three issue resolution sessions. More specific information on the Conference program will be provided to delegates in March and April. Delegates will be asked to indicate preferences among the four issues for participation in three issue resolution development sessions. Every effort will be made to accommodate delegates' preferences.

Part IV. Conference Resolutions Process

This section of the final agenda for the Conference will discuss the process to be used for development and passage of resolutions. A major outcome of any White House Conference is a series of recommendations or resolutions for the development of future policy.

The Policy Committee decided to concentrate the attention of the delegates on a limited number of resolutions. This action was taken to avoid the experience of past White House Conferences from which large numbers of recommendations were produced. The Policy Committee recognizes that the importance of recommendations as guidance for setting policy is diminished when the Conference delegates pass hundreds of recommendations for action.

There will be two avenues for the introduction of resolutions to the Conference delegates. Described below is the first avenue, which begins with the pre-conference events and continues through the three issue resolution development sessions in which each delegate will participate. The Policy Committee has decided that this process will result in passage of no more than 40 resolutions by the Conference delegates.

The second avenue for the introduction of resolutions is by delegates at the Conference. To be voted on by the delegates on Friday morning, a resolution must have the signatures of at least 10% of the delegates by midnight Thursday. These resolutions will be in addition to the 40 resolutions generated by the issue resolution development sessions.

The recommendations generated by pre-conference events will provide the basis for development of Conference resolutions in each of the four issue areas. An Issue Resolution Steering Committee for each issue, composed of recognized experts on the issue and several Policy and Advisory Committee members, will review the relevant pre-conference recommendations to produce a series of resolutions to be considered by the delegates.

The White House Conference on Aging is looking for resolutions which are substantive and can be translated into action at the various levels of government and/or in the private sector. The Policy Committee, therefore, encourages resolutions, to the extent possible, that are structured to include information which addresses:

- Availability (scope of services, level of providers, settings);
- Quality (processes and outcomes);
- Access (affordability, physical access and transportation);
- Responsibility (individual/government, public/private, Federal/State/local); and
- Cost (savings/financing, benefit).

Draft resolutions for each of the issues will be sent to delegates several weeks before the Conference for their review. Delegates will have the opportunity to review the resolutions and come to the Conference prepared to offer suggestions, modifications or new resolutions for consideration. The draft resolutions will serve to initiate discussion in the issue resolution development sessions on Wednesday and Thursday. The Issue Resolution Steering Committee for each issue will review and consolidate the resolutions from each of its issue resolution development sessions. There could be as many as 50 sessions on a single issue.

A revised set of resolutions will be presented to the delegates for review before voting on Friday morning. This revised set will include resolutions introduced through both avenues, pre-conference recommendations and delegates at the Conference.

The Policy Committee is investigating ways in which delegates may vote individually on resolutions Friday morning before the plenary session begins. This voting process would be used to allow delegates to determine resolutions to be brought to the plenary session. A simple majority will be required for passage of resolutions at the plenary session.

Dated: January 26, 1995.

Fernando M. Torres-Gil,

Assistant Secretary for Aging.

[FR Doc. 95–2431 Filed 2–1–95; 8:45 am]

BILLING CODE 4130–02–M

federal register

Thursday
February 2, 1995

Part III

Department of Defense

General Services Administration

National Aeronautics and Space Administration

48 CFR Parts 28, 32, and 52

Federal Acquisition Regulation; Subcontractor Payments; Proposed Rule

DEPARTMENT OF DEFENSE

GENERAL SERVICES ADMINISTRATION

NATIONAL AERONAUTICS AND SPACE ADMINISTRATION

48 CFR Parts 28, 32, and 52

[FAR Case 94–762]

RIN 9000–AG35

Federal Acquisition Regulation; Subcontractor Payments

AGENCIES: Department of Defense (DOD), General Services Administration (GSA), and National Aeronautics and Space Administration (NASA).

ACTION: Proposed rule.

SUMMARY: This proposed rule is issued pursuant to the Federal Acquisition Streamlining Act of 1994, Public Law 103–355 (the Act). The Federal Acquisition Regulatory Council is considering amending the Federal Acquisition Regulation (FAR) to implement Sections 2091 and 8105 of the Act which address subcontractor payments, requests for information, and bonds. This regulatory action was subject to Office of Management and Budget review under Executive Order 12866, dated September 30, 1993.

DATES: Comments should be submitted on or before April 3, 1995 to be considered in the formulation of a final rule.

ADDRESSES: Interested parties should submit written comments to: General Services Administration, FAR Secretariat (VRS), 18th & F Streets, NW., Room 4037, Washington, DC 20405.

Please cite FAR case 94–762 in all correspondence related to this case.

FOR FURTHER INFORMATION CONTACT: Mr. John S. Galbraith, Finance/Payment Team Leader, at (703) 697–6710, in reference to this FAR case. For general information, contact the FAR Secretariat, Room 4037, GS Building, Washington, DC 20405, (202) 501–4755. Please cite FAR case 94–762.

SUPPLEMENTARY INFORMATION:

A. Background

The Federal Acquisition Streamlining Act of 1994, Public Law 103–355 (the Act), provides authorities that streamline the acquisition process and minimize burdensome government-unique requirements. Major changes that can be expected in the acquisition process as a result of the Act's implementation include changes in the areas of Commercial Item Acquisition, Simplified Acquisition Procedures, the Truth in Negotiations Act, and introduction of the Federal Acquisition Computer Network (FACNET). In order to promptly achieve the benefits of the provisions of the Act, the Government is issuing implementing regulations on an expedited basis. We believe prompt publication of proposed rules provides the public the opportunity to participate more fully in the process of developing regulations.

This notice announces FAR revisions developed under FAR case 94–762. The following sections of the Federal Acquisition Streamlining Act are implemented by this proposed rule:

Section 2091 of the Act changed section 806 subsection (c) of the Fiscal Years 1992 and 1993 Defense Authorization Act by striking the existing subsection (c) and inserting a new subsection (c). The stricken words had permitted the FAR Council to substitute FAR coverage for coverage otherwise required from the Secretary of Defense. The substituted words require the FAR Council to place in the FAR, for Government-wide applicability, the coverage required of the Secretary of Defense.

Additionally, Section 8105 of the Act changed section 806 of the Fiscal Years 1992 and 1993 Defense Authorization Act by striking the existing subsection (b) and inserting a new subsection (b). The stricken words dealt with deadlines for the implementation in regulations of the statutory requirements, and that coverage is not longer pertinent. The substituted language creates an exemption from the requirements of the statute for the acquisition of commercial items. Therefore, the clause prescription at FAR 28.106–4(b) has been revised to reflect this exemption.

The proposed rule is, except for minor adjustments, the same language which was previously in the Defense Federal Acquisition Regulation Supplement, at DFARS 228.106–4–70, 228.106–6, 232.970, and 252.228–7006.

It should be noted that Section 4104(b) of the Act concerning subcontractor payments under smaller construction contracts is being addressed in a separate case. This case, 94–762, addresses only the changes required by Sections 2091 and 8105. It should also be noted that the duplication of responsibilities for furnishing copies of bonds in 28.106–6(d)(3) and the clause in 52.228–00 is intentional. The statute assigns this responsibility to both the Government and contractor. Finally, the language in 32.112–1(c) concerning ''administrative and other remedial action'' deliberately does not go into detail as to what these are. The specifics of these areas and especially the regulations and procedures are peculiar to each agency. The wording is derived from the underlying statute.

In addition to the changes proposed here, there are changes being proposed to FAR Part 32 by other cases. FAR Subpart 32.1 (which will include the proposed 32.112) will apply only to purchases of non-commercial items. This will give effect to the exclusion provided for in Section 8105 of the Act. Coverage concerning financing and payment for purchases of commercial items will be provided in its own Subpart 32.2. It should also be noted that purchases of construction are not commercial purchases under the FAR.

The FAR Council is interested in an exchange of ideas and opinions with respect to the regulatory implementation of the Act. For that reason, the FAR Council is conducting a series of public meetings. However, the FAR Council has not scheduled a public meeting on this rule (FAR case 94–762) because of the clarity and non-controversial nature of the rule. If the public believes such a meeting is needed with respect to this rule, a letter requesting a public meeting and outlining the nature of the requested meeting shall be submitted to and received by the FAR Secretariat (see **ADDRESSES** caption) on or before March 6, 1995.

The FAR Council will consider such requests in determining whether a public meeting on this rule should be scheduled.

B. Regulatory Flexibility Act

The proposed rule may have a significant economic impact on a substantial number of small entities within the meaning of the Regulatory Flexibility Act, 5 U.S.C. 601 *et seq.*, although it is not possible to estimate the number of Federal contractors or subcontractors that will be affected. A previous DOD analysis estimated that, based on data available for Fiscal Year 1991, less than 20 percent of all, or a total of 1,100 small business construction contractors under DOD construction contracts would have been impacted. The requirement to provide a copy of the payment bond to prospective subcontractors and suppliers applies to all businesses that enter into a construction prime contract which is subject to the Miller Act (40 U.S.C. 270a–270d). An Initial Regulatory Flexibility Analysis (IFRA) has been prepared and submitted to the Chief Counsel for Advocacy of the Small Business Administration. The IRFA states that it is impossible to accurately

estimate the number of small businesses that prospectively will hold Federal construction contracts subject to the Miller Act and subsequently, the number of prospective subcontractors or suppliers that will request a copy of the payment bond. However, a previous DOD analysis estimated that the previous DOD-only equivalent rule would have impacted less than 20 percent of all small businesses that would have held DOD construction contracts subject to the Miller Act.

A copy of the IRFA may be obtained from the FAR Secretariat at the address given under the **ADDRESSES** caption. Comments are invited. Comments from small entities concerning the affected FAR parts will also be considered in accordance with section 610 of the Act. Such comments must be submitted separately and should cite FAR Case 94–762 in all correspondence.

C. Paperwork Reduction Act

The Paperwork Reduction Act (Pub. L. 96–511) is deemed to apply because the proposed rule contains information collection requirements. Accordingly, a request for approval of a new information collection requirement concerning Subcontractor Payments is being submitted to the Office of Management and Budget under 44 U.S.C. 3501, *et seq.* Public comments concerning this request will be invited through a subsequent **Federal Register** notice.

List of Subjects in 48 CFR Parts 28, 32, and 52

Government procurement.

Dated: January 27, 1995.

Capt. Barry L. Cohen, SC, USN,

Project Manager for the Implementation of the Federal Acquisition Streamlining Act of 1994.

Therefore, it is proposed that 48 CFR Parts 28, 32, and 52 be amended as set forth below:–

1. The authority citation for 48 CFR Parts 28, 32, and 52 continues to read as follows:

Authority: 40 U.S.C. 486(c); 10 U.S.C. chapter 137; and 42 U.S.C. 2473(c).

PART 28—BONDS AND INSURANCE–

2. Section 28.106–4 is amended by designating the existing text as paragraph (a) and adding (b) to read as follows:

28.106–4 Contract clause.

* * * * *_

(b) In accordance with Section 806(a)(2) of Pub. L. 102–190, as amended by Sections 2091 and 8105 of the Federal Acquisition Streamlining Act of 1994, Pub. L. 103–355, the contracting officer shall insert the clause at 52.228–00, Prospective Subcontractor Requests for Bonds, in solicitations and contracts with respect to which a payment bond will be furnished pursuant to the Miller Act (see 28.102–1), except for contracts for the acquisition of commercial items as defined in 48 CFR part 12.

3. Section 28.106–6 is amended by adding paragraph (d) to read as follows:

28.106–6 Furnishing information.

* * * * *_

(d) Section 806(a)(2) of Pub. L. 102–190, as amended by Sections 2091 and 8105 of the Federal Acquisition Streamlining Act of 1994, Pub. L. 103–355, requires that the Federal Government provide subcontractors information on payment bonds under contracts for other than commercial items as defined in 48 CFR part 12. Upon the written or oral request of a subcontractor/supplier, or prospective subcontractor/supplier, under a contract with respect to which a payment bond has been furnished pursuant to the Miller Act, the contracting officer shall promptly provide to the requester, either orally or in writing, as appropriate, any of the following:–

(1) Name and address of the surety or sureties on the payment bond.–

(2) Penal amount of the payment bond.–

(3) Copy of the payment bond. The contracting officer may impose reasonable fees to cover the cost of copying and providing a copy of the payment bond.

PART 32—CONTRACT FINANCING–

4. Sections 32.112, 32.112–1 and 32.112–2 are added to read as follows:

32.112 Payment of subcontractors under contracts for non-commercial items.

32.112–1 Subcontractor assertions of nonpayment.–

(a) In accordance with Pub. L. 102–190, title VIII, section 806(a)(4) as amended by Sections 2091 and 8105 of the Federal Acquisition Streamlining Act of 1994, Pub. L. 103–355, upon the assertion by a subcontractor or supplier of a Federal contractor that the subcontractor or supplier has not been paid in accordance with the payment terms of the subcontract, purchase order, or other agreement with the prime contractor, the contracting officer may determine——

(1) For a construction contract, whether the contractor has made——

(i) Progress payments to the subcontractor or supplier in compliance with chapter 39 of title 31, United States Code (Prompt Payment Act); –

(ii) Final payment to the subcontractor of supplier in compliance with the terms of the subcontract, purchase order, or other agreement with the prime contractor;–

(2) For a contract other than construction, whether the contractor has made progress payments, final payments, or other payments to the subcontractor or supplier in compliance with the terms of the subcontract, purchase order, or other agreement with the prime contractor;–

(3) For any contract, whether the contractor's certification of payment of a subcontractor or supplier accompanying its payment request to the Government is accurate.–

(b) If, in making the determination in subparagraphs (a)(1) and (3) of this section, the contracting officer finds the prime contractor is not in compliance, the contracting officer may——

(1) Encourage the contractor to make timely payment to the subcontractor or supplier; or

(2) If authorized by the applicable payment clauses, reduce or suspend progress payments to the contractor.–

(c) If the contracting officer determines that a certification referred to in paragraph (a)(4) of this section is inaccurate in any material respect, the contracting officer shall initiate administrative or other remedial action.

32.112–2 Subcontractor requests for information.–

(a) In accordance with Pub. L. 102–190, title VIII, section 806(a)(1) as amended by Sections 2091 and 8105 of the Federal Acquisition Streamlining Act of 1994, Pub. L. 103–355, upon the request of a subcontractor or supplier under a Federal contract for a non-commercial purchase, the contracting officer shall promptly advise the subcontractor or supplier as to——

(1) Whether the prime contractor has submitted requests for progress payments or other payments under the contract to the Federal Government; and–

(2) Whether final payment under the contract has been made by the Federal Government to the prime contractor.–

(b) This subsection does not apply to matters that are——

(1) Specifically authorized under criteria established by an Executive order to be kept classified in the interest of national defense or foreign policy; and–

(2) Property classified pursuant to such Executive order (see 5 U.S.C. 552(b)(1)).

PART 52—SOLICITATION PROVISIONS AND CONTRACT CLAUSES–

6. Section 52.228–00 is added to read as follows:

52.228–00 Prospective Subcontractor Requests for Bonds.–

As prescribed in 28.106–4, use the following clause:

PROSPECTIVE SUBCONTRACTOR REQUESTS FOR BONDS (DATE)––

In accordance with section 806(a)(3) of Pub. L. 102–190, as amended by Sections 2091 and 8105 of the Federal Acquisition Streamlining Act of 1994, Pub. L. 103–355, upon the request of a prospective subcontractor or supplier offering to furnish labor or material for the performance of this contract for which a payment bond has been furnished to the Government pursuant to the Miller Act, the Contractor shall promptly provide a copy of such payment bond to the requester.

(End of clause)

[FR Doc. 95–2540 Filed 2–1–95; 8:45 am]

BILLING CODE 6820–34–P

federal register

Thursday
February 2, 1995

Part IV

Department of Agriculture

Agricultural Marketing Service

7 CFR Part 1001 et al.

Milk Marketing Orders; New England et al.; Final Rule

DEPARTMENT OF AGRICULTURE

Agricultural Marketing Service

7 CFR Parts 1001, 1002, 1004, 1005, 1006, 1007, 1011, 1012, 1013, 1030, 1032, 1033, 1036, 1040, 1044, 1046, 1049, 1050, 1064, 1065, 1068, 1075, 1076, 1079, 1093, 1094, 1096, 1106, 1108, 1124, 1126, 1131, 1134, 1135, 1137, 1138, and 1139

[Docket Nos. AO–14–A67, etc.; DA–94–02]

Milk in the New England and Other Marketing Areas; Order Amending the Orders

7 CFR part	Marketing area	AO Nos.
1001	New England	AO–14–A67
1002	New York-New Jersey.	AO–71–A82
1004	Middle Atlantic	AO–160–A70
1005	Carolina	AO–388–A7
1006	Upper Florida	AO–356–A31
1007	Georgia	AO–366–A37
1011	Tennessee Valley	AO–251–A38
1012	Tampa Bay	AO–347–A34
1013	Southeastern Florida	AO–286–A41
1030	Chicago Regional	AO–361–A32
1032	Southern Illinois-Eastern Missouri.	AO–313–A41
1033	Ohio Valley	AO–166–A64
1036	Eastern Ohio-Western Pennsylvania.	AO–179–A59
1040	Southern Michigan	AO–225–A46
1044	Michigan Upper Peninsula.	AO–299–A29
1046	Louisville-Lexington-Evansville.	AO–123–A65
1049	Indiana	AO–319–A42
1050	Central Illinois	AO–355–A29
1064	Greater Kansas City	AO–23–A62
1065	Nebraska-Western Iowa.	AO–86–A51
1068	Upper Midwest	AO–178–A49
1075	Black Hills, South Dakota.	AO–248–A23
1076	Eastern South Dakota.	AO–260–A33
1079	Iowa	AO–295–A45
1093	Alabama-West Florida.	AO–386–A15
1094	New Orleans-Mississippi.	AO–103–A57
1096	Greater Louisiana	AO–257–A44
1106	Southwest Plains	AO–210–A55
1108	Central Arkansas	AO–243–A47
1124	Pacific Northwest	AO–368–A23
1126	Texas	AO–231–A63
1131	Central Arizona	AO–271–A33
1134	Western Colorado	AO–301–A24
1135	Southwestern Idaho-Eastern Oregon.	AO–380–A13
1137	Eastern Colorado	AO–326–A28
1138	New Mexico-West Texas.	AO–335–A39
1139	Great Basin	AO–309–A33

AGENCY: Agricultural Marketing Service, USDA.

ACTION: Final rule.

SUMMARY: This final action provides a new formula to price Class II milk under 37 Federal orders. The Class II milk price will be calculated by adding a fixed differential of 30 cents to the basic formula price for the second preceding month. The Class II price will, like the Class I price in all Federal orders, be announced on or before the fifth day of the month and apply to milk marketed during the following month. This action also will eliminate the ''add-back'' provision which requires that the difference between the Class II price and the Class III price be added to the subsequent month's Class II price when the Class II price for the month falls below the Class III price.

Each of the amended orders was approved by producers who were eligible to have their milk pooled during the representative month for voting purposes. Referenda were conducted in six markets and cooperative associations were polled in the other markets. One order that was included in this proceeding—Paducah, Kentucky—is not included in this final rule. For Paducah, Kentucky, a referendum was conducted and a sufficient number of producers did not approve the issuance of the proposed amended order.

EFFECTIVE DATE: March 1, 1995.

FOR FURTHER INFORMATION CONTACT: Gino M. Tosi, Marketing Specialist, USDA/AMS/Dairy Division, Order Formulation Branch, Room 2971, South Building, P.O. Box 96456, Washington, DC 20090–6456, (202) 690–1366.

SUPPLEMENTARY INFORMATION: This administrative action is governed by the provisions of Sections 556 and 557 of Title 5 of the United States Code and therefore is excluded from the requirements of Executive Order 12866.

The Regulatory Flexibility Act (5 U.S.C. 601–612) requires the Agency to examine the impact of a final rule on small entities. Pursuant to 5 U.S.C. 605(b), the Administrator of the Agricultural Marketing Service has certified that this rule will not have a significant economic impact on a substantial number of small entities. The amended orders will promote more orderly marketing of milk by producers and regulated handlers.

This final rule has been reviewed under Executive Order 12778, Civil Justice Reform. This action is not intended to have a retroactive effect. This action will not preempt any state or local laws, regulations, or policies, unless they present an irreconcilable conflict with this rule.

The Agricultural Marketing Agreement Act of 1937, as amended (7 U.S.C. 601–674), provides that administrative proceedings must be exhausted before parties may file suit in court. Under section 608c(15)(A) of the Act, any handler subject to an order may file with the Secretary a petition stating that the order, any provision of the order, or any obligation imposed in connection with the order is not in accordance with the law and requesting a modification of the order or to be exempted from the order. A handler is afforded the opportunity for a hearing on the petition. After a hearing, the Secretary would rule on the petition. The Act provides that the district court of the United States in any district in which the handler is an inhabitant, or has its principal place of business, has jurisdiction in equity to review the Secretary's ruling on the petition, provided a bill in equity is filed not later than 20 days after the date of the entry of the ruling.

Prior documents in this proceeding:

Notice of Hearing: Issued December 14, 1993; published December 21, 1993 (58 FR 67380).

Recommended Decision: Issued August 22, 1994; published August 26, 1994 (59 FR 44074).

Final Decision: Issued December 2, 1994; published December 14, 1994 (59 FR 64524).

Findings and Determinations

The findings and determinations hereinafter set forth supplement those that were made when each of the aforesaid orders was first issued and when each was amended. The previous findings and determinations are hereby ratified and confirmed, except where they may conflict with those set forth herein.

The following findings are hereby made with respect to each of the aforesaid orders:

(a) Findings upon the basis of the hearing record. Pursuant to the provisions of the Agricultural Marketing Agreement Act of 1937, as amended (7 U.S.C. 601–674), and the applicable rules of practice and procedure governing the formulation of marketing agreements and marketing orders (7 CFR part 900), a public hearing was held upon certain proposed amendments to the tentative marketing agreements and to the orders regulating the handling of milk in the respective marketing areas.

Upon the basis of the evidence introduced at such hearing and the record thereof, for each of the specified orders, it is found that:

(1) The said order as hereby amended, and all of the terms and conditions thereof, will tend to effectuate the declared policy of the Act;

(2) The parity prices of milk, as determined pursuant to section 2 of the Act, are not reasonable in view of the price of feeds, available supplies of feeds, and other economic conditions which affect market supply and demand for milk in the said marketing area; and the minimum prices specified in the order as hereby amended, are such prices as will reflect the aforesaid factors, insure a sufficient quantity of pure and wholesome milk, and be in the public interest; and

(3) The said order as hereby amended regulates the handling of milk in the same manner as, and is applicable only to persons in the respective classes of industrial or commercial activity specified in, a marketing agreement upon which a hearing was held.

(b) Determinations. It is hereby determined that:

(1) The refusal or failure of handlers (excluding cooperative associations specified in Sec. 8c(9) of the Act) of more than 50 percent of the milk, which is marketed within each of the specified marketing areas, to sign a proposed marketing agreement, tends to prevent the effectuation of the declared policy of the Act;

(2) The issuance of this order amending each of the specified orders is the only practical means pursuant to the declared policy of the Act of advancing the interests of producers as defined in the respective orders as hereby amended;

(3) The issuance of the order amending each of the specified orders, except the order regulating the handling of milk in the Michigan Upper Peninsula marketing area, is favored by at least two-thirds of the producers who were engaged in the production of milk for sale in the respective marketing areas; and

(4) The issuance of the order amending the order regulating the handling of milk in the Michigan Upper Peninsula marketing area is favored by at least three-fourths of the producers who during the determined representative period were engaged in the production of milk for sale in the marketing area.

List of Subjects in 7 CFR Parts 1001, 1002, 1004, 1005, 1006, 1007, 1011, 1012, 1013, 1030, 1032, 1033, 1036, 1040, 1044, 1046, 1049, 1050, 1064, 1065, 1068, 1075, 1076, 1079, 1093, 1094, 1096, 1106, 1108, 1124, 1126, 1131, 1134, 1135, 1137, 1138, and 1139

Milk marketing orders.

Order Relative to Handling

It is therefore ordered, That on and after the effective date hereof, the handling of milk in each of the aforesaid marketing areas shall be in conformity to and in compliance with the terms and conditions of each of the orders, as amended, and as hereby further amended, as follows:

The authority citation for 7 CFR Parts 1001 through 1139 continues to read as follows:

Authority: Sec. 1–19, 48 Stat 31, as amended; 7 U.S.C. 601–674.

PART 1001—MILK IN THE NEW ENGLAND MARKETING AREA

§ 1001.21 [Removed and Reserved]

1. Section 1001.21 is removed and reserved.

2. Section 1001.50 is amended by revising paragraph (b) to read as follows:

§ 1001.50 Class prices.

* * * * *

(b) Class II price. The Class II price shall be the basic formula price for the second preceding month plus $0.30.

* * * * *

3. Section 1001.51 is amended by revising the section heading, removing the paragraph designation ''(a)'' without revising the text of the paragraph, and by removing paragraph (b), to read as follows:

§ 1001.51 Basic formula price.

* * * * *

4. Section 1001.54 is revised to read as follows:

§ 1001.54 Announcement of class prices.

The market administrator shall announce publicly on or before the fifth day of each month the Class I and Class II prices for the following month, and the Class III and Class III–A prices for the preceding month.

PART 1002—MILK IN THE NEW YORK-NEW JERSEY MARKETING AREA

§ 1002.19 [Removed and Reserved]

1. Section 1002.19 is removed and reserved.

2. Section 1002.50 is amended by revising paragraph (c) to read as follows:

§ 1002.50 Class prices.

* * * * *

(c) Class II price. The Class II price shall be the basic formula price for the second preceding month plus $0.30.

* * * * *

3. Section 1002.51 is amended by revising the section heading, removing the paragraph designation ''(a)'' without revising the text of the paragraph, and by removing paragraph (b), to read as follows:

§ 1002.51 Basic formula price.

* * * * *.

4. Section 1002.56 is amended by revising the introductory text, removing the introductory text of paragraph (a), redesignating paragraph (a)(1) as paragraph (a), revising paragraph (b), redesignating paragraph (a)(2) as paragraph (c), redesignating paragraph (a)(3) as paragraph (d), redesignating paragraph (a)(4) as paragraph (e), redesignating paragraph (a)(5) as paragraph (f), and redesignating paragraph (a)(6) as paragraph (g), to read as follows:

§ 1002.56 Announcement of class prices and butterfat differential.

The market administrator shall announce publicly on or before the fifth day of each month, the following:

* * * * *

(b) The Class II price for the following month applicable at the 201–210 mile zone and at the 1–10 mile zone.

* * * * *

PART 1004—MILK IN THE MIDDLE ATLANTIC MARKETING AREA

§ 1004.21 [Removed and Reserved]

1. Section 1004.21 is removed and reserved.

2. Section 1004.50 is amended by revising paragraph (b) to read as follows:

§ 1004.50 Class and component prices.

* * * * *

(b) Class II price. The Class II price shall be the basic formula price for the second preceding month plus $0.30.

* * * * *

3. Section 1004.51 is amended by revising the section heading, removing the paragraph designation ''(a)'' without revising the text of the paragraph, and by removing paragraph (b), to read as follows:

§ 1004.51 Basic formula price.

* * * * *

4. Section 1004.53 is amended by revising the introductory text, removing the introductory text of paragraph (a), redesignating paragraph (a)(1) as paragraph (a), revising paragraph (b), redesignating paragraph (a)(2) as paragraph (c), and redesignating paragraph (a)(3) as paragraph (d) to read as follows:

§ 1004.53 Announcement of class prices and component prices.

The market administrator shall announce publicly on or before the fifth day of each month, the following:

* * * * *

(b) The Class II price for the following month;

* * * * *

PART 1005—MILK IN THE CAROLINA MARKETING AREA

§ 1005.20 [Removed]

1. Section 1005.20 is removed.

2. Section 1005.50 is amended by revising paragraph (b) to read as follows:

§ 1005.50 Class prices.

* * * * *

(b) Class II price. The Class II price shall be the basic formula price for the second preceding month plus $0.30.

* * * * *

§ 1005.52 [Removed and Reserved]

3. Section 1005.52 is removed and reserved.

4. Section 1005.54 is revised to read as follows:

§ 1005.54 Announcement of class prices.

The market administrator shall announce publicly on or before the fifth day of each month the Class I price and the Class II price for the following month, and the Class III and Class III–A prices for the preceding month.

PART 1006—MILK IN THE UPPER FLORIDA MARKETING AREA

§ 1006.19 [Removed and Reserved]

1. Section 1006.19 is removed and reserved.

2. Section 1006.50 is amended by revising paragraph (b) to read as follows:

§ 1006.50 Class prices.

* * * * *

(b) Class II price. The Class II price shall be the basic formula price for the second preceding month plus $0.30.

* * * * *

§ 1006.51a [Removed]

3. Section 1006.51a is removed.

4. Section 1006.53 is revised to read as follows:

§ 1006.53 Announcement of class prices.

The market administrator shall announce publicly on or before the fifth day of each month the Class I price and the Class II price for the following month, and the Class III price for the preceding month.

PART 1007—MILK IN THE GEORGIA MARKETING AREA

§ 1007.20 [Removed and Reserved]

1. Section 1007.20 is removed and reserved.

2. Section 1007.50 is amended by revising paragraph (b) to read as follows:

§ 1007.50 Class prices.

* * * * *

(b) Class II price. The Class II price shall be the basic formula price for the second preceding month plus $0.30.

* * * * *

§ 1007.51a [Removed]

3. Section 1007.51a is removed.

4. Section 1007.53 is revised to read as follows:

§ 1007.53 Announcement of class prices.

The market administrator shall announce publicly on or before the fifth day of each month the Class I price and the Class II price for the following month, and the Class III and Class III–A prices for the preceding month.

PART 1011—MILK IN THE TENNESSEE VALLEY MARKETING AREA

§ 1011.20 [Removed]

1. Section 1011.20 is removed.

2. Section 1011.50 is amended by revising paragraph (b) to read as follows:

§ 1011.50 Class prices.

* * * * *

(b) Class II price. The Class II price shall be the basic formula price for the second preceding month plus $0.30.

* * * * *

§ 1011.51a [Removed]

3. Section 1011.51a is removed.

4. Section 1011.53 is revised to read as follows:

§ 1011.53 Announcement of class prices.

The market administrator shall announce publicly on or before the fifth day of each month the Class I price and the Class II price for the following month, and the Class III and Class III–A price for the preceding month.

PART 1012—MILK IN THE TAMPA BAY MARKETING AREA

§ 1012.19 [Removed and Reserved]

1. Section 1012.19 is removed and reserved.

2. Section 1012.50 is amended by revising paragraph (b) to read as follows:

§ 1012.50 Class prices.

* * * * *

(b) Class II price. The Class II price shall be the basic formula price for the second preceding month plus $0.30.

* * * * *

§ 1012.51a [Removed]

3. Section 1012.51a is removed.

4. Section 1012.53 is revised to read as follows:

§ 1012.53 Announcement of class prices.

The market administrator shall announce publicly on or before the fifth day of each month the Class I price and the Class II price for the following month, and the Class III price for the preceding month.

PART 1013—MILK IN THE SOUTHEASTERN FLORIDA MARKETING AREA

§ 1013.19 [Removed and Reserved]

1. Section 1013.19 is removed and reserved.

2. Section 1013.50 is amended by revising paragraph (b) to read as follows:

§ 1013.50 Class prices.

* * * * *

(b) Class II price. The Class II price shall be the basic formula price for the second preceding month plus $0.30.

* * * * *

§ 1013.51a [Removed]

3. Section 1013.51a is removed.

4. Section 1013.53 is revised to read as follows:

§ 1013.53 Announcement of class prices.

The market administrator shall announce publicly on or before the fifth day of each month the Class I price and the Class II price for the following month, and the Class III price for the preceding month.

PART 1030—MILK IN THE CHICAGO REGIONAL MARKETING AREA

§ 1030.20 [Removed and Reserved]

1. Section 1030.20 is removed and reserved.

2. Section 1030.50 is amended by revising paragraph (b) to read as follows:

§ 1030.50 Class prices.

* * * * *

(b) Class II price. The Class II price shall be the basic formula price for the second preceding month plus $0.30.

* * * * *

§ 1030.51a [Removed]

3. Section 1030.51a is removed.

4. Section 1030.53 is revised to read as follows:

§ 1030.53 Announcement of class prices.

The market administrator shall announce publicly on or before the fifth day of each month the Class I price and the Class II price for the following month, and the Class III and Class III–A prices for the preceding month.

PART 1032—MILK IN THE SOUTHERN ILLINOIS-EASTERN MISSOURI MARKETING AREA

§ 1032.20 [Removed]

1. Section 1032.20 is removed.

2. Section 1032.50 is amended by revising paragraph (b) to read as follows:

§ 1032.50 Class prices.

* * * * *

(b) Class II price. The Class II price shall be the basic formula price for the second preceding month plus $0.30.

* * * * *

§ 1032.51a [Removed]

3. Section 1032.51a is removed.

4. Section 1032.53 is revised to read as follows:

§ 1032.53 Announcement of class prices.

The market administrator shall announce publicly on or before the fifth day of each month the Class I price and the Class II price for the following month, and the Class III and Class III–A prices for the preceding month.

PART 1033—MILK IN THE OHIO VALLEY MARKETING AREA

§ 1033.20 [Removed and Reserved]

1. Section 1033.20 is removed and reserved.

2. Section 1033.50 is amended by revising paragraph (b) to read as follows:

§ 1033.50 Class and component prices.

* * * * *

(b) Class II price. The Class II price shall be the basic formula price for the second preceding month plus $0.30.

* * * * *

3. Section 1033.51 is amended by revising the section heading, removing the paragraph designation ''(a)'' without revising the text of the paragraph, and by removing paragraph (b), to read as follows:

§ 1033.51 Basic formula price.

* * * * *

4. Section 1033.53 is amended by revising the introductory text, removing the introductory text of paragraph (a), redesignating paragraph (a)(1) as paragraph (a), revising paragraph (b), redesignating paragraph (a)(2) as paragraph (c), redesignating paragraph (a)(3) as paragraph (d), redesignating paragraph (a)(4) as paragraph (e) and redesignating paragraph (a)(5) as paragraph (f), to read as follows:

§ 1033.53 Announcement of class and component prices.

The market administrator shall announce publicly on or before the fifth day of each month, the following:

* * * * *

(b) The Class II price for the following month;

* * * * *

PART 1036—MILK IN THE EASTERN OHIO-WESTERN PENNSYLVANIA MARKETING AREA

§ 1036.20 [Removed and Reserved]

1. Section 1036.20 is removed and reserved.

2. Section 1036.50 is amended by revising paragraph (b) to read as follows:

§ 1036.50 Class and component prices.

* * * * *

(b) Class II price. The Class II price shall be the basic formula price for the second preceding month plus $0.30.

* * * * *

§ 1036.51a [Removed]

3. Section 1036.51a is removed.

4. Section 1036.53 is amended by revising the introductory text, removing the introductory text of paragraph (a), redesignating paragraph (a)(1) as paragraph (a), revising paragraph (b), redesignating paragraph (a)(2) as paragraph (c), redesignating paragraph (a)(3) as paragraph (d), redesignating paragraph (a)(4) as paragraph (e) and redesignating paragraph (a)(5) as paragraph (f), to read as follows:

§ 1036.53 Announcement of class and component prices.

The market administrator shall announce publicly on or before the fifth day of each month, the following:

* * * * *

(b) The Class II price for the following month;

* * * * *

PART 1040—MILK IN THE SOUTHERN MICHIGAN MARKETING AREA

§ 1040.21 [Removed]

1. Section 1040.21 is removed.

2. Section 1040.50 is amended by revising paragraph (b) to read as follows:

§ 1040.50 Class prices.

* * * * *

(b) Class II price. The Class II price shall be the basic formula price for the second preceding month plus $0.30.

* * * * *

§ 1040.51a [Removed]

3. Section 1040.51a is removed.

4. Section 1040.53 is revised to read as follows:

§ 1040.53 Announcement of class prices.

The market administrator shall announce publicly on or before the fifth day of each month the Class I price and the Class II price for the following month, and the Class III and Class III–A prices for the preceding month.

PART 1044—MILK IN THE MICHIGAN UPPER PENINSULA MARKETING AREA

§ 1044.20 [Removed and Reserved]

1. Section 1044.20 is removed and reserved.

2. Section 1044.22 is amended by revising paragraph (i)(1)(i) and removing paragraph (i)(3), to read as follows:

§ 1044.22 Additional duties of the market administrator.

* * * * *

(i) * * *

(1) * * *

(i) The Class I price and Class II price for the following month;

* * * * *

3. Section 1044.50 is amended by revising paragraph (b) to read as follows:

§ 1044.50 Class prices.

* * * * *

(b) Class II price. The Class II price shall be the basic formula price for the second preceding month plus $0.30.

* * * * *

4. Section 1044.51 is amended by revising the section heading, removing the paragraph designation ''(a)'' without revising the text of the paragraph, and by removing paragraph (b), to read as follows:

§ 1044.51 Basic formula price.

* * * * *

PART 1046—MILK IN THE LOUISVILLE-LEXINGTON-EVANSVILLE MARKETING AREA

§ 1046.20 [Removed]

1. Section 1046.20 is removed.

2. Section 1046.50 is amended by revising paragraph (b) to read as follows:

§ 1046.50 Class prices.

* * * * *

(b) Class II price. The Class II price shall be the basic formula price for the second preceding month plus $0.30.

* * * * *

§ 1046.51a [Removed]

3. Section 1046.51a is removed.

4. Section 1046.53 is revised to read as follows:

§ 1046.53 Announcement of class prices.

The market administrator shall announce publicly on or before the fifth day of each month the Class I price and the Class II price for the following month, and the Class III and Class III–A prices for the preceding month.

PART 1049—MILK IN THE INDIANA MARKETING AREA

§ 1049.20 [Removed]

1. Section 1049.20 is removed.

2. Section 1049.50 is amended by revising paragraph (b) to read as follows:

§ 1049.50 Class and component prices.

* * * * *

(b) Class II price. The Class II price shall be the basic formula price for the second preceding month plus $0.30.

* * * * *

§ 1049.51a [Removed]

3. Section 1049.51a is removed.

4. Section 1049.53 is amended by revising the introductory text, removing the introductory text of paragraph (a), redesignating paragraph (a)(1) as paragraph (a), revising paragraph (b), redesignating paragraph (a)(2) as paragraph (c), redesignating paragraph (a)(3) as paragraph (d), redesignating paragraph (a)(4) as paragraph (e) and redesignating paragraph (a)(5) as paragraph (f), to read as follows:

§ 1049.53 Announcement of class and component prices.

The market administrator shall announce publicly on or before the fifth day of each month, the following:

* * * * *

(b) The Class II price for the following month;

* * * * *

PART 1050—MILK IN THE CENTRAL ILLINOIS MARKETING AREA

§ 1050.20 [Removed]

1. Section 1050.20 is removed.

2. Section 1050.50 is amended by revising paragraph (b) to read as follows:

§ 1050.50 Class prices.

* * * * *

(b) Class II price. The Class II price shall be the basic formula price for the second preceding month plus $0.30.

* * * * *

§ 1050.51a [Removed]

3. Section 1050.51a is removed.

4. Section 1050.53 is revised to read as follows:

§ 1050.53 Announcement of class prices.

The market administrator shall announce publicly on or before the fifth day of each month the Class I price and the Class II price for the following month, and the Class III price for the preceding month.

PART 1064—MILK IN THE GREATER KANSAS CITY MARKETING AREA

§ 1064.20 [Removed]

1. Section 1064.20 is removed.

2. Section 1064.50 is amended by revising paragraph (b) to read as follows:

§ 1064.50 Class prices.

* * * * *

(b) *Class II price.* The Class II price shall be the basic formula price for the second preceding month plus $0.30.

* * * * *

§ 1064.51a [Removed]

3. Section 1064.51a is removed.

4. Section 1064.53 is revised to read as follows:

§ 1064.53 Announcement of class prices.

The market administrator shall announce publicly on or before the fifth day of each month the Class I price and the Class II price for the following month, and the Class III price for the preceding month.

PART 1065—MILK IN THE NEBRASKA-WESTERN IOWA MARKETING AREA

§ 1065.20 [Removed]

1. Section 1065.20 is removed.

2. Section 1065.50 is amended by revising paragraph (b) to read as follows:

§ 1065.50 Class prices.

* * * * *

(b) *Class II price.* The Class II price shall be the basic formula price for the second preceding month plus $0.30.

* * * * *

§ 1065.51a [Removed]

3. Section 1065.51a is removed.

4. Section 1065.53 is revised to read as follows:

§ 1065.53 Announcement of class prices.

The market administrator shall announce publicly on or before the fifth day of each month the Class I price and the Class II price for the following month, and the Class III and Class III–A prices for the preceding month.

PART 1068—MILK IN THE UPPER MIDWEST MARKETING AREA

§ 1068.20 [Removed]

1. Section 1068.20 is removed.

2. Section 1068.50 is amended by revising paragraph (b) to read as follows:

§ 1068.50 Class prices.

* * * * *

(b) *Class II price.* The Class II price shall be the basic formula price for the second preceding month plus $0.30.

* * * * *

§ 1068.51a [Removed]

3. Section 1068.51a is removed.

4. Section 1068.53 is revised to read as follows:

§ 1068.53 Announcement of class prices.

The market administrator shall announce publicly on or before the fifth day of each month the Class I price and the Class II price for the following month, and the Class III and Class III–A prices for the preceding month.

PART 1075—MILK IN THE BLACK HILLS, SOUTH DAKOTA MARKETING AREA

§ 1075.20 [Removed]

1. Section 1075.20 is removed.

2. Section 1075.50 is amended by revising paragraph (b) to read as follows:

§ 1075.50 Class prices.

* * * * *

(b) *Class II price.* The Class II price shall be the basic formula price for the second preceding month plus $0.30.

* * * * *

3. Section 1075.51 is amended by revising the section heading, removing the paragraph designation ''(a)'' without revising the text of the paragraph, and by removing paragraph (b), to read as follows:

§ 1075.51 Basic formula price.

* * * * *

4. Section 1075.53 is revised to read as follows:

§ 1075.53 Announcement of class prices.

The market administrator shall announce publicly on or before the fifth day of each month the Class I price and the Class II price for the following month, and the Class III price for the preceding month.

PART 1076—MILK IN THE EASTERN SOUTH DAKOTA MARKETING AREA

§ 1076.20 [Removed]

1. Section 1076.20 is removed.

2. Section 1076.50 is amended by revising paragraph (b) to read as follows:

§ 1076.50 Class prices.

* * * * *

(b) *Class II price.* The Class II price shall be the basic formula price for the second preceding month plus $0.30.

* * * * *

§ 1076.51a [Removed]

3. Section 1076.51a is removed.

4. Section 1076.53 is revised to read as follows:

§ 1076.53 Announcement of class prices.

The market administrator shall announce publicly on or before the fifth

day of each month the Class I price and the Class II price for the following month, and the Class III price for the preceding month.

PART 1079—MILK IN THE IOWA MARKETING AREA

§ 1079.20 [Removed]

1. Section 1079.20 is removed.
2. Section 1079.50 is amended by revising paragraph (b) to read as follows:

§ 1079.50 Class prices.

* * * * *

(b) *Class II price.* The Class II price shall be the basic formula price for the second preceding month plus $0.30.

* * * * *

§ 1079.51a [Removed]

3. Section 1079.51a is removed.
4. Section 1079.53 is revised to read as follows:

§ 1079.53 Announcement of class prices.

The market administrator shall announce publicly on or before the fifth day of each month the Class I price and the Class II price for the following month, and the Class III and Class III–A prices for the preceding month.

PART 1093—MILK IN THE ALABAMA-WEST FLORIDA MARKETING AREA

§ 1093.20 [Removed]

1. Section 1093.20 is removed.
2. Section 1093.50 is amended by revising paragraph (b) to read as follows:

§ 1093.50 Class prices.

* * * * *

(b) *Class II price.* The Class II price shall be the basic formula price for the second preceding month plus $0.30.

* * * * *

§ 1093.51a [Removed]

3. Section 1093.51a is removed.
4. Section 1093.53 is revised to read as follows:

§ 1093.53 Announcement of class prices.

The market administrator shall announce publicly on or before the fifth day of each month the Class I price and the Class II price for the following month, and the Class III and Class III–A price for the preceding month.

PART 1094—MILK IN THE NEW ORLEANS-MISSISSIPPI MARKETING AREA

§ 1094.20 [Removed]

1. Section 1094.20 is removed.
2. Section 1094.50 is amended by revising paragraph (b) to read as follows:

§ 1094.50 Class prices.

* * * * *

(b) *Class II price.* The Class II price shall be the basic formula price for the second preceding month plus $0.30.

* * * * *

§ 1094.51a [Removed]

3. Section 1094.51a is removed.
4. Section 1094.53 is revised to read as follows:

§ 1094.53 Announcement of class prices.

The market administrator shall announce publicly on or before the fifth day of each month the Class I price and the Class II price for the following month, and the Class III and Class III–A prices for the preceding month.

PART 1096—MILK IN THE GREATER LOUISIANA MARKETING AREA

§ 1096.20 [Removed]

1. Section 1096.20 is removed.
2. Section 1096.50 is amended by revising paragraph (b) to read as follows:

§ 1096.50 Class prices.

* * * * *

(b) *Class II price.* The Class II price shall be the basic formula price for the second preceding month plus $0.30.

* * * * *

§ 1096.51a [Removed]

3. Section 1096.51a is removed.
4. Section 1096.53 is revised to read as follows:

§ 1096.53 Announcement of class prices.

The market administrator shall announce publicly on or before the fifth day of each month the Class I price and the Class II price for the following month, and the Class III and Class III–A prices for the preceding month.

PART 1106—MILK IN THE SOUTHWEST PLAINS MARKETING AREA

§ 1106.20 [Removed]

1. Section 1106.20 is removed.
2. Section 1106.50 is amended by revising paragraph (b) to read as follows:

§ 1106.50 Class prices.

* * * * *

(b) *Class II price.* The Class II price shall be the basic formula price for the second preceding month plus $0.30.

* * * * *

§ 1106.51a [Removed]

3. Section 1106.51a is removed.
4. Section 1106.53 is revised to read as follows:

§ 1106.53 Announcement of class prices.

The market administrator shall announce publicly on or before the fifth day of each month the Class I price and the Class II price for the following month, and the Class III and Class III–A prices for the preceding month.

PART 1108—MILK IN THE CENTRAL ARKANSAS MARKETING AREA

§ 1108.20 [Removed]

1. Section 1108.20 is removed.
2. Section 1108.50 is amended by revising paragraph (b) to read as follows:

§ 1108.50 Class prices.

* * * * *

(b) *Class II price.* The Class II price shall be the basic formula price for the second preceding month plus $0.30.

* * * * *

§ 1108.51a [Removed]

3. Section 1108.51a is removed.
4. Section 1108.53 is revised to read as follows:

§ 1108.53 Announcement of class prices.

The market administrator shall announce publicly on or before the fifth day of each month the Class I price and the Class II price for the following month, and the Class III and Class III–A prices for the preceding month.

PART 1124—MILK IN THE PACIFIC NORTHWEST MARKETING AREA

1. Section 1124.19 is revised to read as follows:

§ 1124.19 Butterfat differential.

The *butterfat differential* is the number that results from subtracting the computation in paragraph (b) of this section from the computation in paragraph (a) of this section and rounding to the nearest one-tenth cent:

(a) Multiply 0.138 times the monthly average Chicago Mercantile Exchange Grade A (92-score) butter price as reported by the Dairy Division;

(b) Multiply 0.0028 times the average price per hundredweight, at test, for manufacturing grade milk, f.o.b. plants in Minnesota and Wisconsin, as reported by the Department for the month.

2. Section 1124.50 is amended by revising the references in paragraphs (e) and (f)(2) from ''§ 1124.19(e)'' to ''§ 1124.19'' and revising paragraph (b) to read as follows:

§ 1124.50 Class and component prices.

* * * * *

(b) *Class II price.* The Class II price shall be the basic formula price for the second preceding month plus $0.30.

* * * * *

3. Section 1124.51 is amended by revising the section heading, removing

the paragraph designation ''(a)'' and revising the reference in that paragraph from ''§ 1124.19(e)'' to ''§ 1124.19'', and by removing paragraph (b), to read as follows:

§ 1124.51 Basic formula price.

* * * * *

4. Section 1124.53 is amended by revising paragraph (a), removing paragraph (b), and redesignating paragraph (c) as paragraph (b), to read as follows:

§ 1124.53 Announcement of class and component prices.

* * * * *

(a) On or before the 5th day of each month, the Class I price and the Class II price for the following month, and the Class III and Class III–A price for the preceding month.

* * * * *

5. In § 1124.75 (a)(2)(i), the reference to ''§ 1124.19(e)'' is revised to read ''§ 1124.19''.

PART 1126—MILK IN THE TEXAS MARKETING AREA

§ 1126.20 [Removed and Reserved]

1. Section 1126.20 is removed and reserved.

2. Section 1126.50 is amended by revising paragraph (b) to read as follows:

§ 1126.50 Class prices.

* * * * *

(b) *Class II price.* The Class II price shall be the basic formula price for the second preceding month plus $0.30.

* * * * *

§ 1126.51a [Removed]

3. Section 1126.51a is removed.

4. Section 1126.53 is revised to read as follows:

§ 1126.53 Announcement of class prices.

The market administrator shall announce publicly on or before the fifth day of each month the Class I price and the Class II price for the following month, and the Class III and Class III–A prices for the preceding month.

PART 1131—MILK IN THE CENTRAL ARIZONA MARKETING AREA

§ 1131.20 [Removed and Reserved]

1. Section 1131.20 is removed and reserved.

2. Section 1131.50 is amended by revising paragraph (b) to read as follows:

§ 1131.50 Class prices.

* * * * *

(b) *Class II price.* The Class II price shall be the basic formula price for the second preceding month plus $0.30.

* * * * *

§ 1131.51a [Removed]

3. Section 1131.51a is removed.

4. Section 1131.53 is revised to read as follows:

§ 1131.53 Announcement of class prices.

The market administrator shall announce publicly on or before the fifth day of each month the Class I price and the Class II price for the following month, and the Class III and Class III–A prices for the preceding month.

PART 1134—MILK IN THE WESTERN COLORADO MARKETING AREA

§ 1134.19 [Removed and Reserved]

1. Section 1134.19 is removed and reserved.

2. Section 1134.50 is amended by revising paragraph (b) to read as follows:

§ 1134.50 Class prices.

* * * * *

(b) *Class II price.* The Class II price shall be the basic formula price for the second preceding month plus $0.30.

* * * * *

§ 1134.51a [Removed]

3. Section 1134.51a is removed.

4. Section 1134.53 is revised to read as follows:

§ 1134.53 Announcement of class prices.

The market administrator shall announce publicly on or before the fifth day of each month the Class I price and the Class II price for the following month, and the Class III price for the preceding month.

PART 1135—MILK IN THE SOUTHWESTERN IDAHO-EASTERN OREGON MARKETING AREA

1. Section 1135.19 is revised to read as follows:

§ 1135.19 Butterfat differential.

The butterfat differential is the number that results from subtracting the computation in paragraph (b) of this section from the computation in paragraph (a) of this section and rounding to the nearest one-tenth cent:

(a) Multiply 0.138 times the monthly average Chicago Mercantile Exchange Grade A (92-score) butter price as reported by the Dairy Division;

(b) Multiply 0.0028 times the average price per hundredweight, at test, for manufacturing grade milk, f.o.b. plants in Minnesota and Wisconsin, as reported by the Department for the month.

2. Section 1135.50 is amended by revising the references in paragraphs (e) and (f)(2) from ''§ 1135.19(e)'' to ''§ 1135.19'' and revising paragraph (b) to read as follows:

§ 1135.50 Class and component prices.

* * * * *

(b) Class II price. The Class II price shall be the basic formula price for the second preceding month plus $0.30.

* * * * *

3. Section 1135.51 is amended by revising the section heading, removing the paragraph designation ''(a)'' and revising the reference in that paragraph from ''§ 1135.19(e)'' to ''§ 1135.19'', and by removing paragraph (b), to read as follows:

§ 1135.51 Basic formula price.

* * * * *

4. Section 1135.53 is amended by revising paragraph (a), removing paragraph (b), and redesignating paragraph (c) as paragraph (b), to read as follows:

§ 1135.53 Announcement of class and component prices.

* * * * *

(a) On or before the 5th day of each month, the Class I price and the Class II price for the following month, and the Class III and Class III–A prices for the preceding month.

* * * * *

5. In § 1135.74(b)(2)(i) and (ii), the references to ''§ 1135.19(e)'' are revised to read ''§ 1135.19''.

PART 1137—MILK IN THE EASTERN COLORADO MARKETING AREA

§ 1137.19 [Removed and Reserved]

1. Section 1137.19 is removed and reserved.

2. Section 1137.50 is amended by revising paragraph (b) to read as follows:

§ 1137.50 Class prices.

* * * * *

(b) Class II price. The Class II price shall be the basic formula price for the second preceding month plus $0.30.

* * * * *

§ 1137.51a [Removed]

3. Section 1137.51a is removed.

4. Section 1137.53 is revised to read as follows:

§ 1137.53 Announcement of class prices.

The market administrator shall announce publicly on or before the fifth day of each month the Class I price and the Class II price for the following month, and the Class III price for the preceding month.

PART 1138—MILK IN THE NEW MEXICO-WEST TEXAS MARKETING AREA

§ 1138.20 [Removed and Reserved]

1. Section 1138.20 is removed and reserved.

2. Section 1138.50 is amended by revising paragraph (b) to read as follows:

§ 1138.50 Class prices.

* * * * *

(b) Class II price. The Class II price shall be the basic formula price for the second preceding month plus $0.30.

* * * * *

§ 1138.52 [Removed and Reserved]

3. Section 1138.52 is removed and reserved.

4. Section 1138.54 is revised to read as follows:

§ 1138.54 Announcement of class prices.

The market administrator shall announce publicly on or before the fifth day of each month the Class I price and the Class II price for the following month, and the Class III and Class III–A price for the preceding month.

PART 1139—MILK IN THE GREAT BASIN MARKETING AREA

§ 1139.19 [Removed and Reserved]

1. Section 1139.19 is removed and reserved.

2. Section 1139.50 is amended by revising paragraph (b) to read as follows:

§ 1139.50 Class prices and component prices.

* * * * *

(b) Class II price. The Class II price shall be the basic formula price for the second preceding month plus $0.30.

* * * * *

3. Section 1139.51 is amended by revising the section heading, removing the paragraph designation ''(a)'' without revising the text of the paragraph, and by removing paragraph (b), to read as follows:

§ 1139.51 Basic formula price.

* * * * *

4. Section 1139.53 is amended by revising paragraph (a), removing paragraph (b), and redesignating paragraph (c) as paragraph (b), to read as follows:

§ 1139.53 Announcement of class and component prices.

* * * * *

(a) The 5th day of each month, the Class I price and the Class II price for the following month.

* * * * *

Dated: January 27, 1995.

Patricia Jensen,

Acting Assistant Secretary Marketing and Regulatory Programs.

[FR Doc. 95–2446 Filed 2–1–95; 8:45 am]

BILLING CODE 3410–02–P

federal register

Thursday
February 2, 1995

Part V

Department of Transportation

Federal Aviation Administration

14 CFR Part 25 et al.

Improved Flammability Standards for Materials Used in the Interiors of Transport Category Airplane Cabins; Final Rule

DEPARTMENT OF TRANSPORTATION

Federal Aviation Administration

14 CFR Parts 25, 121, and 135

[Docket No. 26192, Amendments Nos. 25–83, 121–247 and 135–55]

RIN 2120–AD28

Improved Flammability Standards for Materials Used in the Interiors of Transport Category Airplane Cabins

AGENCY: Federal Aviation Administration (FAA), DOT.

ACTION: Final rule.

SUMMARY: These amendments clarify standards adopted in 1986 concerning the flammability of components used in the cabins of certain transport category airplanes. This action is being taken to preclude costly, unintended changes to airplane interiors. The clarifications, which are applicable to air carriers, air taxi operators and commercial operators, as well as manufacturers of such airplanes, will result in more appropriate, consistent application of those standards.

EFFECTIVE DATE: March 6, 1995.

FOR FURTHER INFORMATION CONTACT: Gary L. Killion, Manager, Regulations Branch, ANM–114, Transport Airplane Directorate, Aircraft Certification Service, FAA, 1601 Lind Avenue Southwest, Renton, Washington 98055–4056; telephone (206) 227–2114.

SUPPLEMENTARY INFORMATION:

Background

These amendments are based on Notice of Proposed Rulemaking (NPRM) 90–12, that was published in the **Federal Register** on April 12, 1990 (55 FR 13886).

As discussed in the notice, Amendments 25–61 and 121–189 (51 FR 26206, July 26, 1986) were adopted to upgrade the flammability standards for materials used in the interiors of transport category airplanes. The improved flammability standards were developed following a research and development program managed and conducted primarily at the FAA Technical Center in Atlantic City, New Jersey, to study aircraft fire characteristics and develop practical test methods. Among the tests conducted at the Technical Center were full-scale fire tests using the fuselage of a military C–133 configured to represent a wide-body jet transport airplane. The test conditions simulated representative post-crash external fuel-fed fires. Numerous laboratory tests were also conducted to correlate possible material qualification test methods with the full-scale tests. As a result of those tests, the Ohio State University (OSU) radiant rate-of-heat-release apparatus was determined to be the most suitable for material qualification. These tests led to the adoption of Amendment 25–61.

Amendment 25–61 established flammability standards for transport category airplanes with passenger seating capacities of 20 or more and specified the test method and apparatus to be used in showing compliance with those standards. It specified that interior ceiling and wall panels (other than lighting lenses), partitions, and the outer surfaces of galleys, large cabinets and stowage compartments (other than underseat stowage compartments and compartments for stowing small items such as magazines and maps) must meet the new standards. As outlined in the amendment, an average of three or more test specimens must not exceed 65 kilowatts per square meter peak heat release nor 65 kilowatt minutes per square meter total heat release during the first two minutes of sample exposure time (65/65) when tested using the OSU test apparatus. These acceptance criteria were chosen in order to produce a significant retardation of the flashover event which controls occupant survivability, as experienced in the full-scale testing. (Burning cabin materials give off unburned gases that collect in the upper portions of the cabin. After a very short time, these unburned gases are heated to the point where they ignite and burn instantaneously. When this occurs, the temperature in the whole cabin becomes so hot that survival is impossible for anyone remaining in the cabin. This phenomenon, known as flashover, also makes further survival impossible by consuming the oxygen in the cabin.)

Because Amendment 25–61 applies explicitly only to airplanes for which an application for type certificate is made after August 20, 1986, Amendment 121–189 to Part 121 of the FAR was also adopted to require operators of certain other airplanes used in air carrier or commercial service to meet the new 65/65 standards. Those airplanes must meet the new standards if they were newly manufactured after August 19, 1990. Airplanes type certificated on or after January 1, 1958, and manufactured prior to August 20, 1990, must also comply with the new standards upon the first substantially complete replacement of the specified cabin interior components on or after the latter date.

Although Part 135 was not amended at that time, air taxi and commercial operators of large airplanes are required to comply as well because § 135.169 incorporated the newly adopted provisions of Part 121 by reference.

At the time the amendments were adopted, the FAA understood that some persons were planning to install components which, even though they would meet the previously existing requirements of Part 25 for flammability, were more flammable than the components that were in general use at that time. In order to preclude a possible degradation in the flammability characteristics of the cabin interiors, Amendment 121–189 also established interim standards of 100 kilowatts per square meter peak heat release and 100 kilowatt minutes per square meter total heat release (100/100). The interim standards are applicable to airplanes manufactured during the two-year period prior to August 20, 1990; and, unless there is a substantially complete replacement of the specified cabin interior components after August 19, 1990, they will remain applicable to those airplanes as long as they are operated under the provisions of Part 121 or Part 135. (If there is a substantially complete replacement on or after August 19, 1990, the definitive 65/65 standards would be applicable.) In addition, the interim standards are also applicable to airplanes in which there is a substantially complete replacement of the specified interior components during that two-year period.

Prior to the adoption of Amendment 121–189, § 121.312 required certain airplanes to meet earlier flammability standards upon the first substantially complete replacement of the cabin interior. (Note that this earlier rulemaking refers to a substantially complete replacement of all cabin interior components, while the later rulemaking refers to a substantially complete replacement of the specified interior components. Whether certain other interior components, e.g., seat cushions and flooring, are replaced is not relevant to whether there is a substantially complete replacement in the latter case. Also, the earlier rulemaking applies to all airplanes while the later rulemaking applies only to airplanes with 20 or more passengers.) This earlier requirement is partially superseded if there is a substantially complete replacement of the interior components specified in § 25.853(a–l) after August 19, 1988. It does, however, remain applicable insofar as interior components not specified in § 25.853(a–l) are concerned. The earlier requirement also remains applicable to airplanes in which there has not been a substantially complete

replacement of the cabin interior since August 19, 1988, and to airplanes with 19 or fewer passengers.

The date of manufacture, as used in § 121.312, is the date on which inspection records show that an airplane is in a condition for safe flight. This is not necessarily the date on which the airplane is in conformity to the approved type design, or the date on which a certificate of airworthiness is issued, since some items not relevant to safe flight, such as passenger seats, may not be installed at that time. It could be earlier, but would be no later than the date on which the first flight of the airplane occurs.

For reasons discussed in the preamble to that amendment, Amendment 25–66 was adopted (53 FR 37542, September 27, 1988) to make minor refinements in the test procedures and apparatus required to show compliance with the standards adopted by Amendment 25–61 and to add a requirement for smoke testing. Amendment 121–198, which was adopted at the same time, added a provision allowing deviations to be granted for certain components.

In the preamble to Amendment 25–61, the FAA noted that the new heat release standards apply to all large-surface cabin interior components, such as sidewalls, ceilings, bins and partitions, and galley structures. It was also noted that the new standards do not apply to smaller items because their small masses would preclude significant contributions to the total heat release in the cabin area. The FAA has received a number of requests for clarification as to the maximum size a component may be without having to comply with the new heat release standards.

The distinction between parts with large surface areas, which must meet the new standards, and those with smaller surface areas is very difficult because of the size of the cabin and other factors that may vary from one airplane to another. For example, a specific component might be insignificant when installed in a large wide-body airplane because it would make a minor contribution to the overall flammability of the area of the cabin in which it is installed. On the other hand, it might represent a major contribution when installed in a smaller transport category airplane. The proximity of the component to a potential source of fire, such as an exit or galley, is also a consideration. It is not possible to cite a specific size that will apply in all installations; however, as a general rule, components with exposed-surface areas of one square foot or less may be considered small enough that they do not have to meet the new standards. Components with exposed-surface areas greater than two square feet may be considered large enough that they do have to meet the new standards. Those with exposed-surface areas greater than one square foot, but less than two square feet, must be considered in conjunction with the areas of the cabin in which they are installed before a determination could be made.

Discussion

Since the time Amendments 25–61 and 121–189 were adopted, the FAA became aware of four areas in which the wording of the new rules does not clearly reflect the intent of the agency as discussed in the preamble to those amendments. Because the new rules do not clearly reflect the intent in those areas and because the comments that were received may have been based on the intent, as expressed in the preambles, rather than the literal wording of the rules, the following clarifications were proposed in Notice 90–12.

Cabin windows and clear vision panels in cabin partitions: The preamble to Amendments 25–61 and 121–189 states, ''The new flammability standards do not apply to transparent or translucent components such as lenses used in interior lights and illuminated signs, and window anti-scratch panels, because of the lack of materials which will meet the flammability standards and still have the light transmissibility characteristics which are vital in emergency situations.'' Although not specifically mentioned in the earlier rulemaking, transparent panels are sometimes inserted in cabin partitions to enhance cabin safety. For example, they are sometimes used to provide seated flight attendants a clear, unobstructed view of the cabin or to provide passengers a view of an exit as an aid to an emergency evacuation. As in the case of lighting lenses and windows, the need for transparent partition panels that enhance cabin safety outweighs the increased safety provided by components that meet the new flammability standards considering the small area such transparencies would involve. In order to preclude confusion concerning the applicability of the standards to such transparent or translucent panels, § 25.853(a–l) (1) and (2) were proposed to read, ''Interior ceiling and wall panels, other than lighting lenses and windows,'' and, ''Partitions, other than transparent panels needed to enhance cabin safety,'' respectively. The maximum size of a transparent panel would, of course, be limited to that which is actually needed to enhance cabin safety.

It was noted that the FAA would consider further rulemaking to require those components to meet the new flammability standards should materials capable of meeting the new flammability standards and having the necessary light transmissibility characteristics for use as windows, etc., be developed later.

Galleys: As currently worded, § 25.853(a–1) states that the new flammability standards apply to the ''outer surfaces of galleys.'' This phrase was intended to make an exception for the interior surfaces of galley cabinets, etc., that would not be exposed to a cabin fire. It is ambiguous, however, because most galleys are not isolated from the main cabin by a door. While one might consider the surfaces of a galley working are to be ''inner surfaces,'' they are actually outer surfaces in most installations in the sense that they could be exposed to a cabin fire. In addition, the inner walls of the galley cart cavity or standard container cavity may also be exposed on some lightly loaded flights when there is not a full complement of carts or containers on board. In order to preclude any confusion in this regard, it was proposed that § 25.853(a–1) would be amended to clarify that any galley surface exposed to the passenger cabin must meet the new standards.

Isolated compartments: Unlike previously existing paragraphs (a) and (b) of § 25.853, the new flammability standards of paragraph (a–1) were intended to apply only to the passenger cabin and not to compartments that are isolated from the passenger cabin. Due, however, to the organization of § 25.853(a–1), if taken literally, the new standards also pertain to each compartment occupied by crew (including one occupied only on a temporary basis) or passengers regardless of whether the particular compartment is isolated from the passenger cabin.

Neither the research and development program nor the regulatory evaluations on which the new flammability standards were based considered that compartments isolated from the passenger cabin (or cabins in the case of airplanes with passenger cabins located on two different decks) would have to comply with the new standards. Unlike most galleys located in the main cabin, remote galleys and other compartments, such as lavatories, pilot compartments and crew rest or sleeping areas, are generally isolated from the passenger cabin by at least a door. In some instances, they are located on separate decks. They would, therefore, not be exposed to a cabin fire until well after

flashover had occurred in the cabin and egress was no longer possible. Should an external fire enter the airplane at one of those compartments, the flammability of the materials used in them would not directly affect the cabin due to their isolation. As stated in the earlier rulemaking, the new standards address a post-crash, external fuel-fed fire situation. With the exception of the pilot compartment, it can be assumed that such compartments would not be occupied by passengers or crewmembers during a post-crash situation.

Although the rulemaking was undertaken to address a post-crash scenario, there is also the question of whether or not requiring the lavatories to meet the new flammability standards would enhance safety significantly in the event a fire originated in a lavatory during flight. This question is particularly pertinent in light of the recently adopted ban on smoking on domestic airline flights. Although some persons might be more tempted to smoke illicitly in a lavatory during such flights, the lavatory smoke detector required by recently adopted Amendment 121–185 (50 FR 12726, March 29, 1985) serves as a deterrent and provides warning of illicit smoking to the crew. In addition, the new standards would not apply to many of the components in a lavatory due to their small size. The doors and most sidewalls have to meet the new standards regardless of whether the new standards are applicable to lavatories because their outer sides also form surfaces of the passenger cabin. Some portions of the lavatory are generally constructed of fireproof stainless steel due to functional considerations. Requiring the few remaining large components to meet the new standards would have very little impact on the overall flammability of the lavatory and would not significantly enhance safety in the event of an inflight fire.

Pilot compartments are generally isolated from the passenger cabin by a bulkhead and door. Although they are obviously occupied full-time, requiring them to meet the new standards would not significantly enhance safety in the event of an inflight fire for essentially the same reasons. Pilot compartments are generally constructed of many small components which would not have to meet the new standards due to their small size. The bulkhead and entry door have to meet the new standards regardless of whether they are applicable to the pilot compartment because the aft sides of those components also form surfaces of the passenger cabin. As in the case of the lavatories, requiring the few remaining large components to meet the new standards would have very little impact on the overall flammability of the pilot compartment. Although there is no smoke detector required, a fire would be detected immediately by the flight crewmembers. In addition, at least one hand fire extinguisher must be conveniently located in the pilot compartment in accordance with § 25.851.(a)(6).

In view of these considerations, it was proposed that § 25.853 would be amended to clarify that compartments that are isolated from the cabin need not meet the standards. Sidewalls, doors etc., that separate such compartments from the passenger cabin would, of course, have to meet the new standards because their outer sides also form surfaces of the passenger cabin.

Galley carts and other rotatable galley equipment: The earlier rulemaking contained the statement, ''Service items, such as pillows or blankets, magazines, food, and alcoholic beverages, are not part of the certification process and would not have to meet the new flammability standard.'' Galley carts are considered to be service items; however, unlike the items cited in the preamble statement, they are generally approved as part of the airplane type design. Although the new flammability standards do not apply expressly to galley carts, it was intended that they would apply implicitly to the extent that, when stowed, the galley carts form exterior surfaces of the galley. Typically, at least one end of each cart remains exposed and forms a galley surface while the cart is stowed. In addition to galley carts, these are galley standard containers used for various meal courses, beverages, plates, etc., that also form galley surfaces when stowed.

Operators have pointed out that galley carts are removable items that are rotated from one airplane to another with each flight. In this regard, they note that their fleets will include older airplanes that are not required to meet the new standards, as well as new airplanes (or airplanes in which the interiors have been replaced) that will be required to meet the new standards. They further note that the carts are loaded before a flight by persons, usually independent caterers, who have no way of knowing whether or not the airplane that will be used on a particular flight is required to meet the new standards. Unless all existing noncomplying galley carts are replaced with galley carts that meet the new standards, there is no practical means to ensure that galley carts meeting the new standards will be loaded on the airplanes that are required to have them. It is estimated that there are now approximately 125,000 galley carts in use with the U.S. air carrier fleet. Typically, the cost per cart ranges from $800 to $3,500; and the service life is about eight to ten years. While it is feasible to replace the existing carts on an attrition basis, it would be impractical to produce enough galley carts meeting the new standards in time to meet the established deadlines. In addition, such immediate replacement would be very costly. The operators note that they would have commented accordingly had they not believed that, as service items, galley carts did not have to meet the new standards.

The galley standard containers are also rotated from airplane to airplane; and they, too, are filled prior to the flight by persons who have no way of knowing whether the airplane that will be used on the flight is one required to meet the new standards. While the cost of each galley standard container would be less than that of a beverage cart, replacing the entire inventory of containers would be very costly.

Although it was intended that the exposed surfaces of stowed galley carts and standard containers should meet the new standards, the FAA has concluded, upon further review, that it was not clearly stated that the galley carts and containers would be required to comply. The FAA does, however, consider that the exposed surfaces of stowed galley carts and standard containers must ultimately meet the new flammability standards. It was, therefore, proposed that § 25.853(a–1) would be amended to specifically require the exposed surfaces of those components to meet the new standards.

The FAA concurs that unless all carts and containers are replaced, it would be extremely difficult to ensure that galley carts and standard containers meeting the new standards are loaded on the airplanes that are required to meet them. Furthermore, the immediate replacement of all galley carts and standard containers would be logistically impossible and would present an unreasonable economic burden. If, on the other hand, galley carts and standard containers that meet the new standards are acquired at a rate commensurate with the rate at which new airplanes are acquired (and interiors of older airplanes are replaced), it can be assumed that the overall level of safety of the air carrier fleet will not be adversely affected by intermixing carts and containers complying with the new standards with those that do not. The small decrement of safety that would be suffered due to

the use of noncomplying carts and containers in an airplane that must meet the new standards would be compensated by an increment of safety enjoyed due to the use of complying carts and containers in another airplane that is not required to meet them. It was, therefore, proposed that § 121.312 would be amended to allow such intermixing of galley carts and standard containers, provided that all carts and containers manufactured after a specified date meet the new standards.

Other changes: Certain minor refinements in the test apparatus and procedures were identified; and it was proposed that Appendix F of Part 25, including the associated figures, would be revised accordingly. The proposed refinements would not preclude the use of materials previously found to be acceptable under the new standards; nor enable the use of materials previously found unacceptable; however, they would improve the repeatability of test results from one test run to another and from one laboratory to another. Other minor nonsubstantive editing changes would be made for consistency in style. Nonsubstantive editing changes would also be made to § 25.853 for clarity.

It was also proposed that the organization and language of § 121.312(a) would be revised for clarity.

As noted above, Part 135 was not amended at the time the new standards were adopted; however, they are equally applicable to Part 135 operators because § 135.169(a) incorporates the provisions of § 121.312 by cross reference. Since that time, it has come to the attention of the FAA that the practice of incorporating certain provisions of Part 121 in Part 135 by cross reference may cause confusion. In order to preclude any confusion in this regard, it was proposed that Part 135 would be amended to include the new standards explicitly rather than by reference. Because Part 135 operators are already required to meet these standards due to the incorporation by cross reference, this change would not place any additional burden on any person.

The reference to ''November 26, 1987'' in § 121.312(b) is no longer relevant because that date has already passed. It would, therefore, be removed for simplification. The redundant reference to Appendix F of Part 25 would also be removed from § 121.312(b) for simplification and consistency with the editorial style used in § 121.312(a). (Appendix F, Part II, is incorporated by cross reference in § 25.853(c); and Appendix F, Part IV, is incorporated by cross reference in § 25.853(a-1).)

Since the time Notice 90–12 was issued, Amendment 25–72 was adopted (55 FR 29756, July 20, 1990). Although no substantive changes to § 25.853 were adopted, the requirements of that section were rearranged considerably for clarity, and the test acceptance criteria formerly contained in that section were transferred to Part I of Appendix F. It is, therefore, necessary to make a number of nonsubstantive conforming changes for consistency with § 25.853 in its present format.

Among the changes made to § 25.853 as a result of the adoption of Amendment 25–72 was the transfer of the seat cushion flammability standards from former § 25.853(c) to new § 25.853(b). It has been brought to the attention of the FAA that this change is causing considerable confusion.

Seats are frequently transferred from one airplane to another; therefore, as a practical matter, they must be marked to show that their cushions comply with the flammability standards. With the change in section number, the previous markings indicating compliance with § 25.853(c) are no longer accurate. In order to eliminate further confusion in that regard, § 25.853(b) has been marked ''Reserved,'' and the seat cushion flammability standards have been transferred back to § 25.853(c).

For convenience, the proposed changes to § 25.853 are discussed below both in terms of their identity in Notice 90–12 and as rearranged for conformity with the changes resulting from the adoption of Amendment 25–72.

Discussion of Comments

Seven commenters responded to the request for comments contained in Notice 90–12. These included manufacturers, a foreign airworthiness authority, and organizations representing manufacturers, airlines, and airline employees.

One commenter notes that the restructuring and numbering of § 25.853 may have inadvertently excluded such items as lighting lenses, windows, transparent panels needed to enhance cabin safety, etc., from compliance with any of the flammability standards of § 25.853. The FAA concurs that the wording proposed in Notice 90–12 could have led to an incorrect interpretation of that nature. Section 25.853 is, therefore, changed by transferring the statement ''Except as provided * * *'' to § 25.853(d), which would have been § 25.853(a-1) as proposed in Notice 90–12.

One commenter opposes the proposal to clarify that compartments isolated from the cabin are not required to meet the heat release standards of § 25.853(a–l). The commenter states that all compartment components should be of the same standard and that meeting the same standard would ensure that the net amount of material contributing to fire development and propagation is at the absolute minimum. In that regard, the commenter cites the accident involving a McDonnell Douglas DC–9 operated by Air Canada on June 2, 1983, at the Greater Cincinnati Airport, Covington, Kentucky. The commenter notes that, while the origin of the fire that destroyed the airplane could not be identified, the lavatory compartment's interior material was the primary source of fuel and that the fire burned undetected for almost 15 minutes before the smoke was first noticed. The commenter asserts that requiring the compartment to meet the same low heat release standards as the main cabin would significantly reduce the amount of fuel available for such a fire.

Contrary to the commenter's assertion, requiring all lavatory components to meet the new standards for heat release would not significantly reduce the amount of fuel available for a fire originating in the lavatory. As noted above under Background, the heat release standards do not apply to small surface-area components. As further noted above under Discussion, many of the components in the lavatory are small enough that they would not have to meet the new standards in any event. The doors and most sidewalls have to meet the new standards regardless of whether the new standards are applicable to lavatories because their outer sides also form surfaces of the passenger cabin. Some portions of the lavatory are generally constructed of stainless steel due to functional considerations. Stainless steel is, of course, fireproof. Requiring the few remaining large components to meet the new standards would have very little impact on the overall flammability of the lavatory and would not significantly enhance safety in the event of an inflight fire.

In the accident cited by the commenter, smoke was discovered coming from the left-hand lavatory in the aft cabin while the airplane was enroute from Dallas, Texas to Montreal, Quebec. An emergency landing was not made until 17 minutes later. By that time, the fire and smoke had grown in intensity to the point that only half of the 46 occupants were able to escape. As noted in their official accident report, NTSB/AAR–86/02, the National Transportation Safety Board determined that the probable causes of the accident were a fire of unknown origin, an underestimate of the fire severity, and

misleading fire progress information provided to the captain. Considering the few lavatory components that would be affected and the time that the fire had been burning prior to the emergency landing, it is unlikely that the outcome of the accident would have been more favorable if the lavatory of that airplane had met the new heat release standards.

Subsequent to the accident, the FAA adopted Amendments 25–58 and 121–183 (49 FR 43182, October 26, 1984), and 25–59 and 121–184 (49 FR 43188, October 26, 1984), that require, respectively, low-level lighting to enable occupants to locate emergency exits in smoke-filled cabins and new flammability standards for seat cushions. Unlike the heat release standards of Amendment 25–61, the new flammability standards for seat cushions are designed to slow the progression of a fire through the cabin. The standards of Amendment 25–61 are, on the other hand, designed to reduce the overall release of heat into the cabin during a post-crash fire situation and provide more time for egress before flashover makes further escape impossible. Amendment 121–185 (50 FR 12726, March 29, 1985) was also adopted to require each lavatory to be equipped with a smoke detection system, or equivalent, and a fire extinguisher that discharges automatically upon the occurrence of a fire in the trash receptacle. In addition, the amendment requires the passenger cabins of certain airplanes to be equipped with additional hand fire extinguishers, some of which must contain the improved agent Halon 1211.

The commenter also notes that all compartments with essential systems adjacent to their surfaces should be required to meet the heat release standards of § 25.853(a–1) in order to protect the essential conductors of those systems from the high heat releases of burning interior materials.

The commenter appears to be confusing the standards for heat release with other standards for flame resistance. As noted above, the heat release standards are designed to reduce the overall release of heat into an area and thereby delay the time until flashover occurs. It is assumed, on the other hand, that the insulation of electrical wiring and cables could be enveloped by flame. They must, therefore, be tested by actual application of flame to the insulation surface.

The same commenter recommends that, if an isolated compartment does not have to meet the heat release standards, the doors separating the compartment from the main cabin should be able to contain the heat and smoke in the isolated compartment for at least five minutes. (Such doors would be 'fire-resistant' as defined in Part 1 of the FAR.)

The commenter's recommendation is apparently based on the assumption that there will be an uncontrollable fire originating from an isolated compartment. In view of the fire protection measures that have been adopted for lavatories since the above noted accident, there is no evident need for fire-resistant lavatory doors. Furthermore, service history does not support a need for such doors to other isolated compartments. The exception proposed as § 25.853(a–2) is, therefore, adopted as § 25.853(e).

One commenter recommends that § 25.853(a–1)(1) be amended to read, ''other than lighting lenses, illuminated signs and windows,'' since illuminated signs are discussed in the preamble to Notice 90–12 as examples of excluded items. While it is true that the illuminated portions of passenger information signs are not required to meet the heat release standards of that section, it is not necessary to refer to them specifically in § 25.853(a–1)(1) because they are ''lighting lenses.'' Proposed § 25.853(a–1)(1) is adopted as § 25.853(d)(1).

The same commenter and one other recommend that § 25.853(a–2) be clarified by adding ''lavatories'' to the list of compartments whose interiors are excluded. Unlike the illuminated signs discussed above, it may not be as clear that lavatories are considered isolated compartments and, as such, are already excluded. Proposed § 25.853(a–2) is, therefore, changed to read, ''* * * such as pilot compartments, galleys, lavatories, crew rest quarters, cabinets and stowage compartments, * * *,'' and adopted as § 25.853(e).

One commenter suggests that § 25.853(a–2) should stipulate ''20 or more passengers.'' Since the only purpose of this paragraph, adopted as paragraph (e), is to make an exception to paragraph (a–1), adopted as paragraph (d), which is already so limited, there is no need to repeat this limitation of applicability.

Because the flammability standards of § 25.853(d), formerly § 25.853(a–1), are applicable only to airplanes with 20 or more passengers, some persons have mistakenly assumed that the seat cushion standards of § 25.853(c) are also applicable only to airplanes with 20 or more passengers. To preclude any confusion in this regard, the phrase, ''regardless of the passenger capacity of the airplane,'' has been added to § 25.853 (a) and (c).

Another commenter suggests that Part IV of Appendix F should be amended to permit the use of the optional 14-hole upper pilot burner that has been found satisfactory. Actually, the use of this optional burner has already been accepted by the FAA under the equivalent safety provisions of § 21.21(b)(1). The FAA notes that test data obtained during testing with the three-hole burner are sometimes invalidated because the pilot burner would not remain lighted for the entire 5-minute duration of the test. With the optional 14-hole burner, there is a greater probability of reigniting any flamelets that might extinguish during a test. Because the 14-hole burner may be preferable in some instances, Part IV is amended to describe the optional use of that burner, as suggested by the commenter. Testing with this optional burner is already permitted under the equivalent safety provisions of § 21.21(b)(1); therefore, this is a minor nonsubstantive change that places no additional burden on any person.

Paragraph (b)(8) states that the pilot burners must remain lighted for the entire duration of the test. In regard to the difficulties experienced in keeping the three-hole upper pilot burner lighted for the entire duration of the test, the FAA proposed to add the statement, ''Intermittent pilot flame extinguishment for more than 3 seconds would invalidate the test results.'' The same commenter notes that further clarification is required. According to the commenter, it is normal for some of the upper pilot-burner flamelets to be extinguished for periods that can exceed three seconds when samples containing flame retardants are tested. The commenter notes that the results of such tests have been considered acceptable provided some of the flamelets have remained lighted.

The FAA concurs that it is not necessary for each flamelet of the three-hole upper pilot burner to remain lighted for the entire 5-minute duration of the test; however, test results may be invalidated if two flamelets are unlighted for more than 3 seconds. In order to preclude, such intermittent flamelet extinguishment, the FAA has permitted applicants to install an igniter. Intermittent flame extinguishment has not posed a problem with the optional 14-hole upper pilot burner since it was developed to preclude flame extinguishment. Paragraph (b)(8) is, therefore, changed to read, ''Since intermittent pilot flame extinguishment for more than 3 seconds would invalidate the test results, a spark igniter may be installed to ensure that the burners remain lighted.'' Paragraph

(e)(8), which is considered a more appropriate location than paragraph (b)(8), is amended to clarify the requirements for burners and flamelets to remain lighted.

Part IV, paragraph (e)(3) states that the proper air flow may be set and monitored by either an orifice meter or a rotometer. Because of difficulties experienced in setting and monitoring the air flow with a rotometer, the FAA proposed in Notice 90–12 to amend that paragraph to refer only to an orifice meter. The same commenter cited the successful use of a rotometer by the National Research Council of Canada and recommended that the reference to a rotormeter be retained in that paragraph. While the use of a rotometer may be successful in some instances, the FAA does not have sufficient information at this time to conclude that a rotometer is acceptable on a general basis. It is, therefore, not considered appropriate to specifically cite the rotormeter in that paragraph as an acceptable alternative means of setting and monitoring air flow. The FAA does recognize, however, that rotometers, or any other devices for that matter, may be improved to the point that their use is acceptable. In that event, those devices could be used under the equivalent safety provisions of § 21.21(b)(1).

The same commenter notes that the area of .02323 m^2 specified in the heat release equation of paragraph (f)(2) is based on a test specimen size of 6 x 6 inches. Since the actual size of the sample is 150 x 150 mm, the commenter believes that an area factor of .0225 m^2 should actually be used in the heat release equation.

Although the commenter is technically correct, the definitive 65/65 and the interim 100/100 standards were established based on the use of a factor of .02323 m^2. Furthermore all testing completed to date has been based on the use of the .02323 factor. Changing the factor to .0225 at this late date would mean that the 65/65 and 100/100 standards would have to be changed to 67/67 and 103/103, respectively, in order to preclude a degradation of the components approved for use in airplane cabins. This would no doubt cause considerable confusion, particularly when test results obtained with the .0225 factor are compared with earlier test results obtained with the original .02323 factor.

The same commenter notes that considerable confusion is created by the fact that dimensions of the the test apparatus are specified in U.S. units in some instances and in metric units in others. The FAA concurs. For clarity, part IV is revised to show dimensions in both U.S. units and their metric equivalents. Other minor, nonsubstantive changes are also made to Part IV for clarity.

Section 121.312(a) incorporates the heat release standards of § 25.853(a–1) by cross reference. Since the latter section applies only to airplanes with passenger capacities of 20 or more, § 121.312(a) requires compliance with these heat release standards only for airplanes with passenger capacities of 20 or more. As one commenter notes, § 121.312(a) can be misinterpreted to require compliance for all transport category airplanes regardless of their passenger capacity. In order to preclude possible confusion in this regard, both § 121.312(a) and newly adopted § 135.170(b)(1) state specifically that compliance is required only for airplanes with passenger capacities of 20 or more.

Another commenter notes that § 121.312(a) (1) through (6) and the corresponding § 135.170(b)(1) (i) through (vi) are complex and difficult to understand. The FAA acknowledges that these sections are very complex. This is due primarily to the fact that there are differing requirements dependent on such factors as when the airplane was type certificated, when it was manufactured, when there was a substantially complete replacement of the cabin interior components, etc. There is even a distinction between complete replacement of all cabin interior components in one case and just those components identified in § 25.853(a–1) in another. The only way in which the provisions of these sections could be significantly simplified would be to require compliance for all airplanes at one time. While that would simplify the regulatory language considerably, it would impose costly additional burdens on some operators with no commensurate improvement in safety. Nevertheless, minor nonsubstantive changes have been made wherever possible to clarify these requirements.

Proposed § 121.312(a)(8) states, in part, that ''* * * galley carts and galley standard containers that do not meet the heat release rate testing requirements * * * may be used * * * provided the galley carts or standard containers were manufactured prior to August 20, 1990.'' One commenter believes that this section should refer to galley carts and standard containers manufactured prior to a date two years after the effective date of this amendment.

The FAA concurs that it is inappropriate to specify a date earlier than the date on which this final rule becomes effective. The FAA does not, however, agree that an additional two-year compliance time is necessary. The amendment does not require galley carts and standard containers manufactured after the specified date to comply. Instead, it relieves operators of the burden of ensuring that only complying galley carts and standard containers are loaded on airplanes that are required to meet the new flammability standards *provided* the galley carts and standard containers are manufactured prior to that date. Section 121.312(a)(8) and the corresponding § 135.170(b)(viii) are, therefore, changed to read, ''* * * provided the galley carts or standard containers were manufactured prior to March 6, 1995.

One commenter believes that there should be a specific definition of what constitutes ''substantially complete replacement'' as stated in § 121.312. The commenter expresses concern that the definition should allow for the individual replacement of cabin interior components without the mandatory replacement of all components at the same time.

''Complete replacement,'' as used in § 121.312 and newly adopted § 135.170(b), means that all of the affected components in the cabin are replaced. (As noted above under *Background*, whether the other components that are not affected, e.g. seat cushions and flooring, are replaced is not relevant.) The qualifying word ''substantially'' was added simply to prevent operators from avoiding compliance by not replacing a minor, inconsequential cabin component and claiming that there had not been a ''complete replacement.'' Section 212.312 does, therefore, permit individual replacement of cabin interior components without the mandatory replacement of all components at the same time. This, of course, assumes that the cabin components did not already have to meet the heat release standards because of the date of manufacture of the airplane or because they had been completely replaced previously. It should also be noted that removing components for refinishing and reinstalling them in the same airplane is considered ''refurbishment,'' not ''replacement.''

Proposed § 135.170(b) states, ''No person may operate a large airplane unless * * *'' Several commenters note that Part 23 commuter category airplanes are ''large airplanes,'' as defined by Part 1 of the FAR, and, as such, would be required to meet the new flammability standards contained in that section. Another commenter has a similar concern that proposed

§ 135.170(b) would appear to add substantial requirements for airplanes type certificated under the provisions of Part 23 and Special Federal Aviation Regulations (SFAR) No. 41.

Although commuter category airplanes may be large enough to be ''large airplanes'' as defined by Part 1, they are not permitted to carry more than 19 passengers. Since the flammability standards of § 135.170(b) apply only to airplanes with more than 19 passengers, commuter category airplanes would not be required to comply even though they may be ''large airplanes.'' SFAR No. 41 provides that, contrary provisions of Part 1 notwithstanding, airplanes certificated under the provisions of that SFAR are considered to be ''small airplanes'' in regard to compliance with Part 135. Furthermore they, like commuter category airplanes, are not permitted to carry more than 19 passengers.

Since neither commuter category airplanes nor those type certificated under the provisions of SFAR No. 41 are permitted to carry more than 19 passengers, there is no need to amend § 135.170(b) of specifically exclude those airplanes. Specifically stating in §§ 121.312(a) and 135.170(b)(1) that only airplanes with 20 or more passengers seats are required to comply, as discussed above, will preclude confusion in this regard.

One commenter reiterates a belief that the seat cushion flammability standards of § 25.853(c) are an unnecessary burden for operators of small transport category airplanes with passenger seating capacities of fewer than 19 passengers. The commenter is referring in this regard to the provisions of § 121.312 which were previously incorporated by cross reference in § 135.169 and now are stated explicitly as new § 135.170(b)(2). Section 121.312(b) and the new § 135.170(b)(2), in turn specify that the operator must have seat cushions that meet the flammability standards of § 25.853(c). That issue has already been addressed by FAA in earlier rulemaking and is not related, in any substantive manner, to the present rulemaking.

Another commenter notes an inadvertent error in proposed § 135.169(a) in that it would incorporate § 121.311 by cross reference. The intent was to move the no longer needed reference to § 121.312, not to replace it with § 121.311. Section 135.169(a) is corrected accordingly.

Regulatory Evaluation

Regulatory Evaluation

Exeuctive Order 12291, dated February 17, 1981, directs Federal agencies to promulgate new regulations or modify existing regulations only if potential benefits to society for each regulatory change outweigh potential costs. This section summarizes the full regulatory evaluation prepared by the FAA that provides more detailed estimates of the economic consequences of this regulatory action.

The evaluations prepared for Amendments 25–61 and 121–189, and Amendments 25–66 and 121–198 remain unchanged by this rule with respect to costs and benefits, regulatory flexibility determinations, and trade impact assessment.

None of the amendments in this rule will generate significant costs or benefits. In part, the rule clarifies the original intent of the earlier amendments. The changes to the test apparatus and procedures for determining heat release rate are minor refinements that will result only in negligible costs and benefits. The amendment to Part 135 is a nonsubstantive change that incorporates existing requirements explicitly rather than by cross reference. The remaining changes are editorial or conforming in nature.

Regulatory Flexibility Determination

The Regulatory Flexibility Act of 1989 (RFA) was enacted by Congress to ensure that small entities are not unnecessarily or disproportionately burdened by Government regulations. The RFA requires a Regulatory Flexibility Analysis if a rule has a significant economic impact, either detrimental or beneficial, on a substantial number of small entities. FAA Order 2100.14A, Regulatory Flexibility Criteria and Guidance, established threshold cost values and small entity size standards for complying with RFA review requirements in FAA rulemaking actions. The FAA has determined that this rule will not have a significant economic impact on a substantial number of small entities.

International Trade Impact Analysis

This rule will not have an adverse impact either on the trade opportunities of U.S. operators or manufacturers of transport category airplanes doing business abroad, or on foreign operators or aircraft manufacturers doing business in the United States.

Federalism Implications

The regulations adopted herein will not have substantial direct effects on the States, on the relationship between the national government and the States, or on the distribution of power and responsibilities among the various levels of government. Therefore, in accordance with Executive Order 12612, it is determined that this final rule will not have sufficient federalism implications to warrant the preparation of a Federalism Assessment.

Conclusion: Because the regulations adopted herein are expected to result only in negligible costs, the FAA has determined that this final rule is not major as defined in Executive Order 12291. Because this is an issue that has not prompted a great deal of public concern, this final rule is not considered to be significant as defined in Department of Transportation Regulatory Policies and Procedures (44 FR 11034, February 26, 1979). In addition, since there are no small entities affected by this rulemaking, it is certified, under the criteria of the Regulatory Flexibility Act, that this final rule, at promulgation, will not have a significant economic impact, positive or negative, on a substantial number of small entities. The regulatory evaluation prepared for Amendments 25–66 and 121–198 remains applicable and has been placed on the docket. A copy of this evaluation may be obtained by contacting the person identified under the caption **FOR FURTHER INFORMATION CONTACT.**

List of Subjects

14 CFR Part 25

Aircraft, Air transportation, Aviation safety, Safety.

14 CFR Part 121

Air carriers, Aircraft, Airplanes, Air transportation, Aviation safety, Common carriers, Flammable materials, Safety, Transportation.

14 CFR Part 135

Air carriers, Aircraft, Airplanes, Air transportation, Aviation safety, Cargo, Hazardous materials, Mail, Safety, Transportation.

Adption of the Amendment

Accordingly, 14 CFR Parts 25, 121 and 135 of the Federal Aviation Regulations (FAR) are amended as follows:

PART 25—AIRWORTHINESS STANDARDS: TRANSPORT CATEGORY AIRPLANES

1. The authority citation for Part 25 is revised to read as follows:

Authority: 49 U.S.C. 106(g), 1344, 1354(a), 1355, 1421, 1423, 1424, 1425, 1428, 1429, 1430.

2. By revising § 25.853 to read as follows:

§ 25.853 Compartment interiors.

For each compartment occupied by the crew or passengers, the following apply:

(a) Materials (including finishes or decorative surfaces applied to the materials) must meet the applicable test criteria prescribed in Part I of Appendix F of this Part, or other approved equivalent methods, regardless of the passenger capacity of the airplane.

(b) [Reserved]

(c) In addition to meeting the requirements of paragraph (a) of this section, seat cushions, except those on flight crewmember seats, must meet the test requirements of part II of Appendix F of this Part, or other equivalent methods, regardless of the passenger capacity of the airplane.

(d) Except as provided in paragraph (e) of this section, the following interior components of airplanes with passenger capacities of 20 or more must also meet the test requirements of parts IV and V of Appendix F of this Part, or other approved equivalent method, in addition to the flammability requirements prescribed in paragraph (a) of this section:

(1) Interior ceiling and wall panels, other than lighting lenses and windows;

(2) Partitions, other than transparent panels needed to enhance cabin safety;

(3) Galley structure, including exposed surfaces of stowed carts and standard containers and the cavity walls that are exposed when a full complement of such carts or containers is not carried; and

(4) Large cabinets and cabin stowage compartments, other than underseat stowage compartments for stowing small items such as magazines and maps.

(e) The interiors of compartments, such as pilot compartments, galleys, lavatories, crew rest quarters, cabinets and stowage compartments, need not meet the standards of paragraph (d) of this section, provided the interiors of such compartments are isolated from the main passenger cabin by doors or equivalent means that would normally be closed during an emergency landing condition.

(f) Smoking is not to be allowed in lavatories. If smoking is to be allowed in any other compartment occupied by the crew or passengers, an adequate number of self-contained, removable ashtrays must be provided for all seated occupants.

(g) Regardless of whether smoking is allowed in any other part of the airplane, lavatories must have self-contained, removable ashtrays located conspicuously on or near the entry side of each lavatory door, except that one ashtray may serve more than one lavatory door if the ashtray can be seen readily from the cabin side of each lavatory served.

(h) Each receptacle used for the disposal of flammable waste material must be fully enclosed, constructed of at least fire resistant materials, and must contain fires likely to occur in it under normal use. The capability of the receptacle to contain those fires under all probable conditions of wear, misalignment, and ventilation expected in service must be demonstrated by test.

3. By amending part IV of Appendix F to Part 25 by revising paragraphs (a), (b)(1) through (6), (b)(8), (c)(1), (d) heading and (d)(1), (d)(3), (e)(1) through (5), (e)(8), (f)(2), and by adding paragraph (c)(3); transferring Figures 1 through 5 at the end of Appendix F to the end of part IV of Appendix F and adding a heading preceding the figures, and by removing Figure 1 of part IV and adding Figures 1A and 1B in its place to read as follows:

Appendix F to Part 25

* * * * *

Part IV—Test Method to Determine the Heat Release Rate from Cabin Materials Exposed to Radiant Heat.

(a) *Summary of Method.* Three or more specimens representing the completed aircraft component are tested. Each test specimen is injected into an environmental chamber through which a constant flow of air passes. The specimen's exposure is determined by a radiant heat source adjusted to produce, on the specimen, the desired total heat flux of 3.5 W/cm². The specimen is tested with the exposed surface vertical. Combustion is initiated by piloted ignition. The combustion products leaving the chamber are monitored in order to calculate the release rate of heat.

(b) * * *

(1) This apparatus is shown in Figures 1A and 1B of this part IV. All exterior surfaces of the apparatus, except the holding chamber, must be insulated with 1 inch (25 mm) thick, low density, high temperature, fiberglass board insulation. A gasketed door, through which the sample injection rod slides, must be used to form an airtight closure on the specimen hold chamber.

(2) *Thermopile.* The temperature difference between the air entering the environmental chamber and that leaving must be monitored by a thermopile having five hot, and five cold, 24-guage Chromel-Alumel junctions. The hot junctions must be spaced across the top of the exhaust stack, .38 inches (10 mm) below the top of the chimney. The thermocouples must have a .050 ± .010 inch (1.3 ± .3mm) diameter, ball-type, welded tip. One thermocouple must be located in the geometric center, with the other four located 1.18 inch (30 mm) from the center along the diagonal toward each of the corners (Figure 5 of this part IV). The cold junctions must be located in the pan below the lower air distribution plate (see paragraph (b)(4) of this part IV). Thermopile hot junctions must be cleared of soot deposits as needed to maintain the calibrated sensitivity.

(3) *Radiation Source.* A radiant heat source incorporating four Type LL silicon carbide elements, 20 inches (508 mm) long by .63 inch (16 mm) O.D., must be used, as shown in Figures 2A and 2B of this part IV. The heat source must have a nominal resistance of 1.4 ohms and be capable of generating a flux up to 100 kW/m². The silicone carbide elements must be mounted in the stainless steel panel box by inserting them through .63 inch (16 mm) holes in .03 inch (1 mm) thick ceramic fiber or calcium-silicate millboard. Locations of the holes in the pads and stainless steel cover plates are shown in Figure 2B of this part IV. The truncated diamond-shaped mask of .042 ± .002 inch (1.07 ± .05mm) stainless steel must be added to provide uniform heat flux density over the area occupied by the vertical sample.

(4) *Air Distribution System.* The air entering the environmental chamber must be distributed by a .25 inch (6.3 mm) thick aluminum plate having eight No. 4 drill-holes, located 2 inches (51 mm) from sides on 4 inch (102 mm) centers, mounted at the base of the environmental chamber. A second plate of 18 guage stainless steel having 120, evenly spaced, No. 28 drill holes must be mounted 6 inches (152 mm) above the aluminum plate. A well-regulated air supply is required. The air-supply manifold at the base of the pyramidal section must have 48, evenly spaced, No. 26 drill holes located .38 inch (10 mm) from the inner edge of the manifold, resulting in an airflow split of approximately three to one within the apparatus.

(5) *Exhaust Stack.* An exhaust stack, 5.25 × 2.75 inches (133 × 70 mm) in cross section, and 10 inches (254 mm) long, fabricated from 28 guage stainless steel must be mounted on the outlet of the pyramidal section. A. 1.0 × 3.0 inch (25 × 76 mm) baffle plate of 0.18 ± .002 inch (.50 ± .05 mm) stainless steel must be centered inside the stack, perpendicular to the air flow, 3 inches (76 mm) above the base of the stack.

(6) *Specimen Holders.* (i) The specimen must be tested in a vertical

orientation. The specimen holder (Figure 3 of this part IV) must incorporate a frame that touches the specimen (which is wrapped with aluminum foil as required by paragraph (d)(3) of this Part) along only the .25 inch (6 mm) perimeter. A ''V'' shaped spring is used to hold the assembly together. A detachable .50×.50×5.91 inch (12×12×150 mm) drip pan and two .020 inch (.5 mm) stainless steel wires (as shown in Figure 3 of this part IV) must be used for testing materials prone to melting and dripping. The positioning of the spring and frame may be changed to accommodate different specimen thicknesses by inserting the retaining rod in different holes on the specimen holder.

(ii) Since the radiation shield described in ASTM E–906 is not used, a guide pin must be added to the injection mechanism. This fits into a slotted metal plate on the injection mechanism outside of the holding chamber. It can be used to provide accurate positioning of the specimen face after injection. The front surface of the specimen must be 3.9 inches (100 mm) from the closed radiation doors after injection.

(iii) The specimen holder clips onto the mounted bracket (Figure 3 of this part IV). The mounting bracket must be attached to the injection rod by three screws that pass through a wide-area washer welded onto a ½-inch (13 mm) nut. The end of the injection rod must be threaded to screw into the nut, and a .020 inch (5.1 mm) thick wide area washer must be held between two ½-inch (13 mm) nuts that are adjusted to tightly cover the hole in the radiation doors through which the injection rod or calibration calorimeter pass.

(7) * * *

(8) *Pilot-Flame Positions.* Pilot ignition of the specimen must be accomplished by simultaneously exposing the specimen to a lower pilot burner and an upper pilot burner, as described in paragraph (b)(8)(i) and (b)(8)(ii) or (b)(8)(iii) of this part IV, respectively. Since intermittent pilot flame extinguishment for more than 3 seconds would invalidate the test results, a spark ignitor may be installed to ensure that the lower pilot burner remains lighted.

(i) *Lower Pilot Burner.* The pilot-flame tubing must be .25 inch (6.3 mm) O.D., .03 inch (0.8mm) wall, stainless steel tubing. A mixture of 120 cm^3/min. of methane and 850 cm^3/min. of air must be fed to the lower pilot flame burner. The normal position of the end of the pilot burner tubing is .40 inch (10 mm) from and perpendicular to the exposed vertical surface of the specimen. The centerline at the outlet of the burner tubing must intersect the vertical centerline of the sample at a point .20 inch (5 mm) above the lower exposed edge of the specimen.

(ii) *Standard Three-Hole Upper Burner.* The pilot burner must be a straight length of .25 inch (6.3 mm) O.D., .03 inch (0.8 mm) wall, stainless steel tubing that is 14 inches (360 mm) long. One end of the tubing must be closed, and three No. 40 drill holes must be drilled into the tubing, 2.38 inch (60 mm) apart, for gas ports, all radiating in the same direction. The first hole must be .19 inch (5 mm) from the closed end of the tubing. The tube must be positioned .75 inch (19 mm) above and .75 inch (19 mm) behind the exposed upper edge of the specimen. The middle hole must be in the vertical plane perpendicular to the exposed surface of the specimen which passes through its vertical centerline and must be pointed toward the radiation source. The gas supplied to the burner must be methane and must be adjusted to produce flame lengths of 1 inch (25 mm).

(iii) *Optional Fourteen-Hole Upper Pilot Burner.* This burner may be used in lieu of the standard three-hole burner described in paragraph (b)(8)(ii) of this part IV. The pilot burner must be a straight length of .25 inch (6.3 mm) O.D., .03 inch (0.8 mm) wall, stainless steel tubing that is 15.75 inches (400 mm) long. One end of the tubing must be closed, and 14 No. 59 drill holes must be drilled into the tubing, .50 inch (13 mm) apart, for gas ports, all radiating in the same direction. The first hole must be .50 inch (13 mm) from the closed end of the tubing. The tube must be positioned above the specimen holder so that the holes are placed above the specimen as shown in Figure 1B of this part IV. The fuel supplied to the burner must be methane mixed with air in a ratio of approximately 50/50 by volume. The total gas flow must be adjusted to produce flame lengths of 1 inch (25 mm). When the gas/air ratio and the flow rate are properly adjusted, approximately .25 inch (6 mm) of the flame length appears yellow in color.

(c) * * * (1) *Heat Release Rate.* A calibration burner, as shown in Figure 4, must be placed over the end of the lower pilot flame tubing using a gas tight connection. The flow of gas to the pilot flame must be at least 99 percent methane and must be accurately metered. Prior to usage, the wet test meter must be properly leveled and filled with distilled water to the tip of the internal pointer while no gas is flowing. Ambient temperature and pressure of the water are based on the internal wet test meter temperature. A baseline flow rate of approximately 1 liter/min. must be set and increased to higher preset flows of 4, 6, 8, 6 and 4 liters/min. Immediately prior to recording methane flow rates, a flow rate of 8 liters/min. must be used for 2 minutes to precondition the chamber. This is not recorded as part of calibration. The rate must be determined by using a stopwatch to time a complete revolution of the wet test meter for both the baseline and higher flow, with the flow returned to baseline before changing to the next higher flow. The thermopile baseline voltage must be measured. The gas flow to the burner must be increased to the higher preset flow and allowed to burn for 2.0 minutes, and the thermopile voltage must be measured. The sequence must be repeated until all five values have been determined. The average of the five values must be used as the calibration factor. The procedure must be repeated if the percent relative standard deviation is greater than 5 percent. Calculations are shown in paragraph (f) of this part IV.

(2) * * *

(3) As noted in paragraph (b)(2) of this part IV, thermopile hot junctions must be cleared of soot deposits as needed to maintain the calibrated sensitivity.

(d) *Preparation of Test Specimens.* (1) The test specimens must be representative of the aircraft component in regard to materials and construction methods. The standard size for the test specimens is 5.91 ± .03 × 5.91 ± .03 inches (149 ± 1 × 149 ± 1 mm). The thickness of the specimen must be the same as that of the aircraft component it represents up to a maximum thickness of 1.75 inches (45 mm). Test specimens representing thicker components must be 1.75 inches (45 mm).

(2) * * *

(3) *Mounting.* Each test specimen must be wrapped tightly on all sides of the specimen, except for the one surface that is exposed with a single layer of .001 inch (.025 mm) aluminum foil.

(e) *Procedure.* (1) The power supply to the radiant panel must be set to produce a radiant flux of 3.5 ± .05 W/cm^2, as measured at the point the center of the specimen surface will occupy when positioned for the test. The radiant flux must be measured after the air flow through the equipment is adjusted to the desired rate.

(2) After the pilot flames are lighted, their position must be checked as described in paragraph (b)(8) of this part IV.

(3) Air flow through the apparatus must be controlled by a circular plate orifice located in a 1.5 inch (38.1 mm) I.D. pipe with two pressure measuring

points, located 1.5 inches (38 mm) upstream and .75 inches (19 mm) downstream of the orifice plate. The pipe must be connected to a manometer set at a pressure differential of 7.87 inches (200 mm) of Hg. (See Figure 1B of this part IV.) The total air flow to the equipment is approximately .04 m^3/seconds. The stop on the vertical specimen holder rod must be adjusted so that the exposed surface of the specimen is positioned 3.9 inches (100 mm) from the entrance when injected into the environmental chamber.

(4) The specimen must be placed in the hold chamber with the radiation doors closed. The airtight outer door must be secured, and the recording devices must be started. The specimen must be retained in the hold chamber for 60 seconds, plus or minus 10 seconds, before injection. The thermopile ''zero'' value must be determined during the last 20 seconds of the hold period. The sample must not be injected before completion of the ''Zero'' value determination.

(5) When the specimen is to be injected, the radiation doors must be opened. After the specimen is injected into the environmental chamber, the radiation doors must be closed behind the specimen.

(6) * * *

(7) * * *

(8) The test duration is five minutes. The lower pilot burner and the upper pilot burner must remain lighted for the entire duration of the test, except that there may be intermittent flame extinguishment for periods that do not exceed 3 seconds. Furthermore, if the optional three-hole upper burner is used, at least two flamelets must remain lighted for the entire duration of the test, except that there may be intermittent flame extinguishment of all three flamelets for periods that do not exceed 3 seconds.

(9) * * *

(f) * * *

(2) Heat release rates may be calculated from the reading of the thermopile output voltage at any instant of time as:

$$HRR = \frac{(V_m - V_b)K_n}{.02323m^2}$$

HRR=heat release rate (kw/m^2)

V_b=baseline voltage (mv)

V_m=measured thermopile voltage (mv)

K_h=calibration factor (kw/mv)

* * * * *

Figures to Part IV of Appendix F

BILLING CODE 4910–13–M

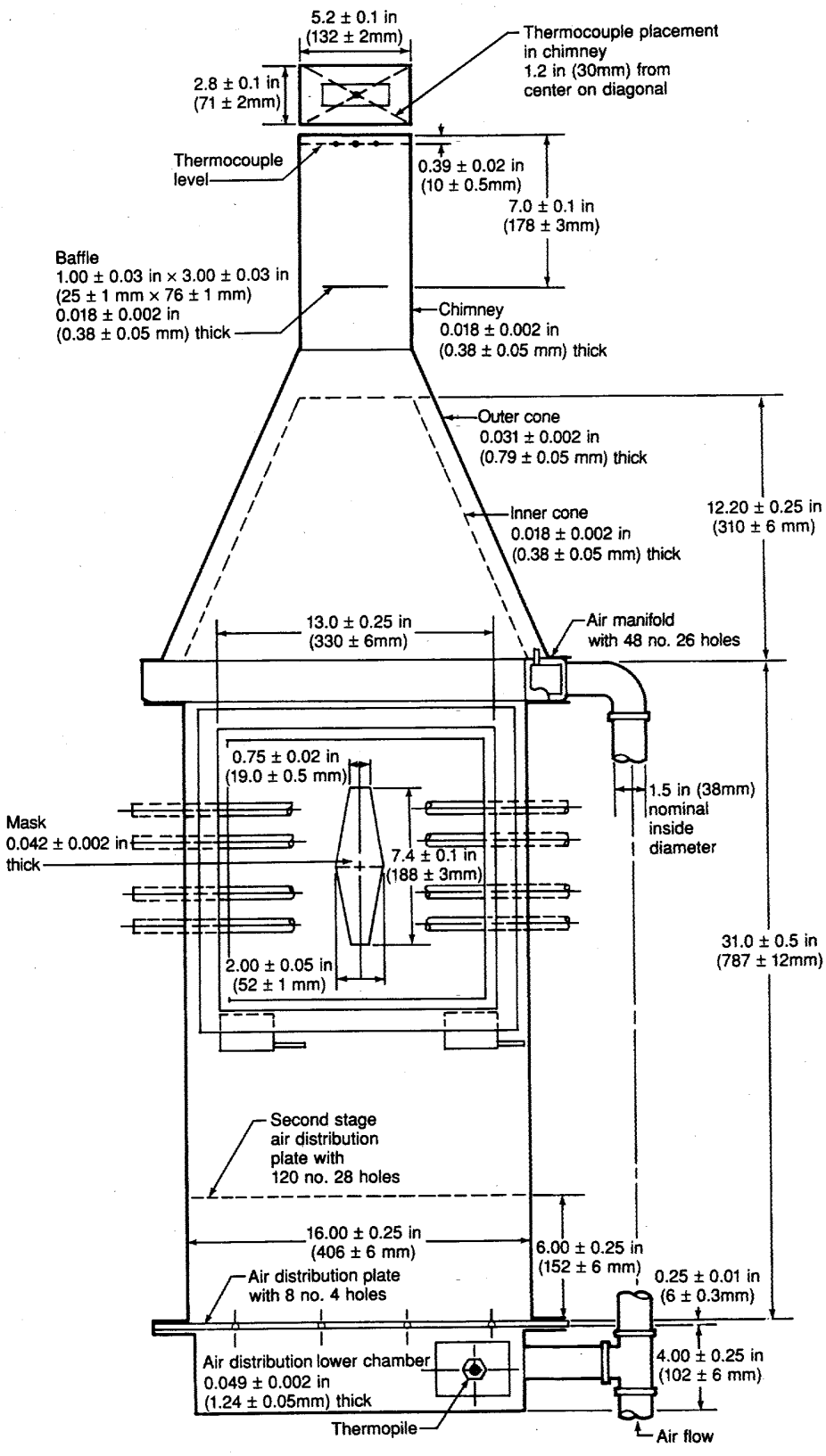

Figure 1A Rate of Heat Release Apparatus

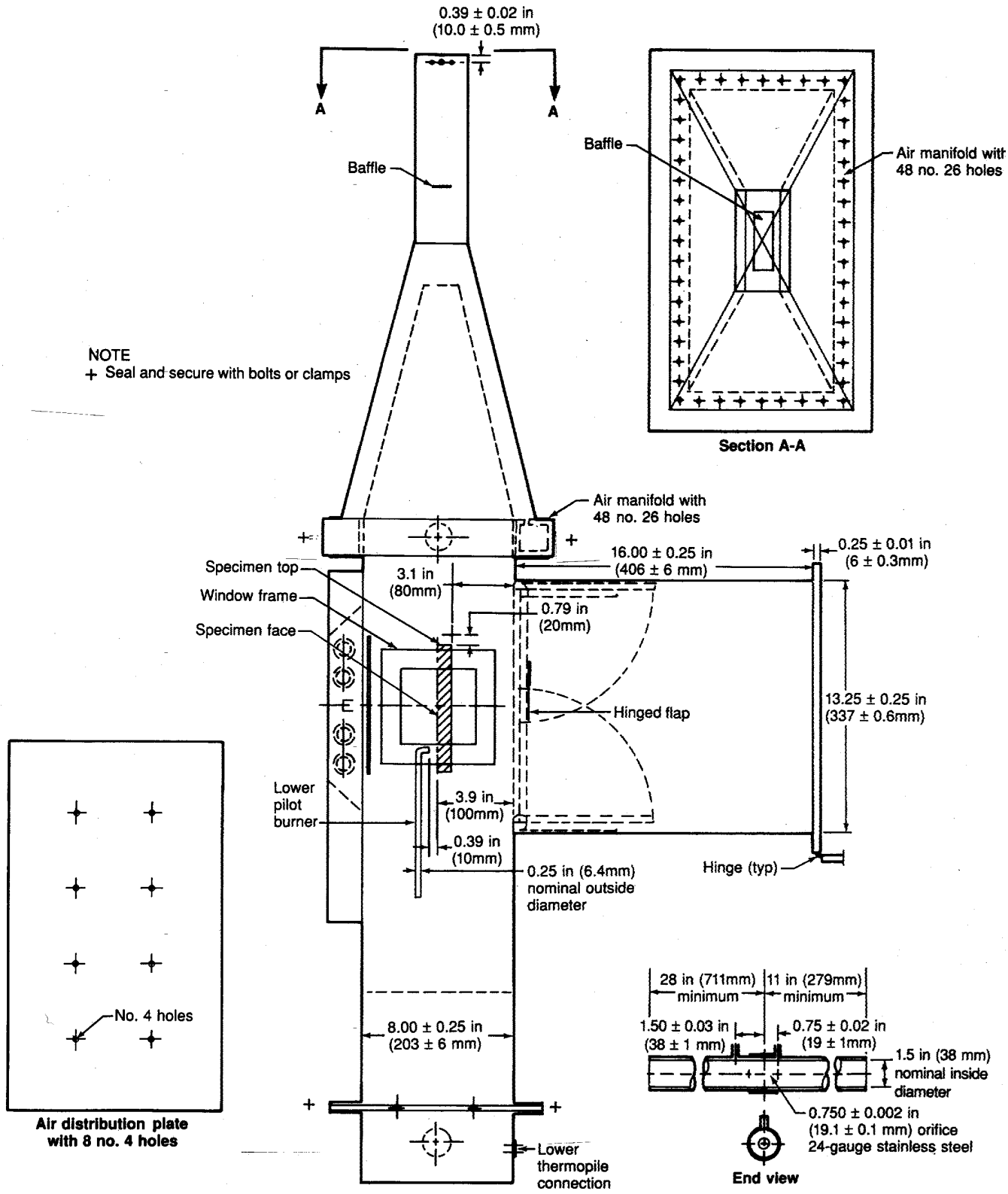

Figure 1B

Rate of Heat Release Apparatus

BILLING CODE 4910–13–C

* * * * *

PART 121—CERTIFICATION AND OPERATIONS: DOMESTIC, FLAG, AND SUPPLEMENTAL AIR CARRIERS AND COMMERCIAL OPERATORS OF LARGE AIRCRAFT

4. The authority citation for Part 121 continues to read as follows:

Authority: 49 U.S.C. 1354(a), 1355, 1356, 1357, 1401, 1421–1430, 1472, 1485, and 1502; 49 U.S.C. 106(g); 49 CFR 1.47(a).

5. By amending § 121.312 by revising paragraphs (a)(1) through (a)(6), adding a new paragraph (a)(8), and revising paragraph (b) to read as follows:

§ 121.312 Materials for compartment interiors.

(a) * * *

(1) Except as provided in paragraph (a)(6) of this section, each airplane with a passenger capacity of 20 or more and manufactured after August 19, 1988, but prior to August 20, 1990, must comply with the heat release rate testing provisions of § 25.853(d) in effect March 6, 1995 (formerly § 25.853(a–1) in effect on August 20, 1986), except that the total heat release over the first 2 minutes of sample exposure must not exceed 100 kilowatt minutes per square meter and the peak heat release rate must not exceed 100 kilowatts per square meter.

(2) Each airplane with a passenger capacity of 20 or more and manufactured after August 19, 1990, must comply with the heat release rate and smoke testing provisions of § 25.853(d) in effect March 6, 1995 (formerly § 25.853(a–1) in effect on September 26, 1988).

(3) Except as provided in paragraph (a)(5) or (a)(6) of this section, each airplane for which the application for type certificate was filed prior to May 1, 1972, must comply with the provisions of § 25.853 in effect on April 30, 1972, regardless of the passenger capacity if there is a substantially complete replacement of the cabin interior after April 30, 1972.

(4) Except as provided in paragraph (a)(5) or (a)(6) of this section, each airplane for which the application for type certificate was filed after May 1, 1972, must comply with the material requirements under which the airplane was type certificated regardless of the passenger capacity if there is a substantially complete replacement of the cabin interior after that date.

(5) Except as provided in paragraph (a)(6) of this section, each airplane that was type certificated after January 1, 1958, and has a passenger capacity of 20 or more, must comply with the heat release rate testing provisions of § 25.853(d) in effect March 6, 1995 (formerly § 25.853(a–1) in effect on August 20, 1986), if there is substantially complete replacement of the cabin interior components identified in § 25.853(d) on or after that date, except that the total heat release over the first 2 minutes of sample exposure shall not exceed 100 killowatt-minutes per square meter and the peak heat release rate shall not exceed 100 kilowatts per square meter.

(6) Each airplane that was type certificated after January 1, 1958, and has a passenger capacity of 20 or more, must comply with the heat release rate and smoke testing provisions of § 25.853(d) in effect March 6, 1995 (formerly § 25.853(a–1) in effect on September 26, 1988), if there is a substantially complete replacement of the cabin interior components identified in § 25.853(d) on or after August 20, 1990.

* * * * *

(8) Contrary provisions of this section notwithstanding, galley carts and galley standard containers that do not meet the flammability and smoke emission requirements of § 25.853(d) in effect March 6, 1995 (formerly § 25.853(a–1)) may be used in airplanes that must meet the requirements of paragraph (a–1), (a)(2), (a)(5) or (a)(6) of this section, provided the galley carts or standard containers were manufactured prior to March 6, 1995.

(b) For airplanes type certificated after January 1, 1958, seat cushions, except those on flight crewmember seats, in any compartment occupied by crew or passengers must comply with the requirements pertaining to fire protection of seat cushions in § 25.853(c) effective on November 26, 1984.

PART 135—AIR TAXI OPERATORS AND COMMERCIAL OPERATORS

6. The authority citation for Part 135 continues to read as follows:

Authority: 49 U.S.C. 1354(a), 1355(a), 1421–1431, and 1502; 49 U.S.C. 106(g); 49 CFR 1.47(a).

7. By amending § 135.169 by revising paragraph (a) to read as follows:

§ 135.169 Additional airworthiness requirements.

(a) Except for commuter category airplanes, no person may operate a large airplane unless it meets the additional airworthiness requirements of §§121.213 through 121.283 and 121.307 of this chapter.

* * * * *

8. By revising § 135.170 to read as follows:

§ 135.170 Materials for compartment interiors.

(a) No person may operate an airplane that conforms to an amended or supplemental type certificate issued in accordance with SFAR No. 41 for a maximum certificated takeoff weight in excess of 12,500 pounds unless within one year after issuance of the initial airworthiness certificate under that SFAR, the airplane meets the compartment interior requirements set forth in § 25.853(a) in effect March 6, 1995 (formerly § 25.853 (a), (b), (b–1), (b–2), and (b–3) of this chapter in effect on September 26, 1978).

(b) No person may operate a large airplane unless it meets the following additional airworthiness requirements:

(1) Except for those materials covered by paragraph (b)(2) of this section, all materials in each compartment used by the crewmembers or passengers must meet the requirements of § 25.853 of this chapter in effect as follows or later amendment thereto:

(i) Except as provided in paragraph (b)(1)(iv) of this section, each airplane with a passenger capacity of 20 or more and manufactured after August 19, 1988, but prior to August 20, 1990, must comply with the heat release rate testing provisions of § 25.853(d) in effect March 6, 1995 (formerly § 25.853(a–1) in effect on August 20, 1986), except that the total heat release over the first 2 minutes of sample exposure rate must not exceed 100 kilowatt minutes per square meter and the peak heat release rate must not exceed 100 kilowatts per square meter.

(ii) Each airplane with a passenger capacity of 20 or more and manufactured after August 19, 1990, must comply with the heat release rate and smoke testing provisions of § 25.853(d) in effect March 6, 1995 (formerly § 25.83(a–1) in effect on September 26, 1988).

(iii) Except as provided in paragraph (b)(1) (v) or (vi) of this section, each airplane for which the application for type certificate was filed prior to May 1, 1972, must comply with the provisions of § 25.853 in effect on April 30, 1972, regardless of the passenger capacity, if there is a substantially complete replacement of the cabin interior after April 30, 1972.

(iv) Except as provided in paragraph (b)(1) (v) or (vi) of this section, each airplane for which the application for type certificate was filed after May 1, 1972, must comply with the material requirements under which the airplane was type certificated regardless of the passenger capacity if there is a substantially complete replacement of the cabin interior after that date.

(v) Except as provided in paragraph (b)(1)(vi) of this section, each airplane that was type certificated after January 1, 1958, must comply with the heat release testing provisions of § 25.853(d) in effect March 6, 1995 (formerly § 25.853(a–1) in effect on August 20, 1986), if there is a substantially complete replacement of the cabin interior components identified in that paragraph on or after that date, except that the total heat release over the first 2 minutes of sample exposure shall not exceed 100 kilowatt-minutes per square meter and the peak heat release rate shall not exceed 100 kilowatts per square meter.

(vi) Each airplane that was type certificated after January 1, 1958, must comply with the heat release rate and smoke testing provisions of § 25.853(d) in effect March 6, 1995 (formerly § 25.853(a–1) in effect on August 20, 1986), if there is a substantially complete replacement of the cabin interior components identified in that paragraph after August 19, 1990.

(vii) Contrary provisions of this section notwithstanding, the Manager of the Transport Airplane Directorate, Aircraft Certification Service, Federal Aviation Administration, may authorize deviation from the requirements of paragraph (b)(1)(i), (b)(1)(ii), (b)(1)(v), or (b)(1)(vi) of this section for specific components of the cabin interior that do not meet applicable flammability and smoke emission requirements, if the determination is made that special circumstances exist that make compliance impractical. Such grants of deviation will be limited to those airplanes manufactured within 1 year after the applicable date specified in this section and those airplanes in which the interior is replaced within 1 year of that date. A request for such grant of deviation must include a thorough and accurate analysis of each component subject to § 25.853(d) in effect March 6, 1995 (formerly § 25.853(a–1) in effect on August 20, 1986), the steps being taken to achieve compliance, and for the few components for which timely compliance will not be achieved, credible reasons for such noncompliance.

(viii) Contrary provisions of this section notwithstanding, galley carts and standard galley containers that do not meet the flammability and smoke emission requirements of § 25.853(d) in effect March 6, 1995 (formerly § 25.853(a–1) in effect on August 20, 1986), may be used in airplanes that must meet the requirements of paragraph (b)(1)(i), (b)(1)(ii), (b)(1)(iv) or (b)(1)(vi) of this section provided the galley carts or standard containers were manufactured prior to March 6, 1995.

(2) For airplanes type certificated after January 1, 1958, seat cushions, except those on flight crewmember seats, in any compartment occupied by crew or passengers must comply with the requirements pertaining to fire protection of seat cushions in § 25.853(c) effective November 26, 1984.

Issued in Washington, D.C., on January 24, 1995.

David R. Hinson,

Administrator.

[FR Doc. 95–2114 Filed 2–1–95; 8:45 am]

BILLING CODE 4910–13–M

federal register

Thursday
February 2, 1995

Part VI

Department of Transportation

Federal Aviation Administration

14 CFR Part 25, et al.

Fuel System Vent Fire Protection; Proposed Rule

DEPARTMENT OF TRANSPORTATION

Federal Aviation Administration

14 CFR Parts 25, 121, 125, and 135

[Docket No. 24251; Notice No. 847–17A]

RIN 2120–AA49

Fuel System Vent Fire Protection

AGENCY: Federal Aviation Administration, DOT.

ACTION: Notice of proposed rulemaking.

SUMMARY: This notice proposes an amendment to the airworthiness standards for transport category airplanes to require fuel system vent protection during post-crash ground fires. This proposal is the result of information obtained from public hearings on aircraft fire safety, and recommendation by the Special Aviation Fire and Explosion Reduction (SAFER) Advisory Committee, and is intended to provide protection against a fuel tank explosion following a post-crash ground fire. The proposed amendment would apply to air carriers, air taxi operators, and commercial operators of transport category airplanes, as well as the manufacturers of such airplanes.

DATES: Comments must be received on or before June 2, 1995.

ADDRESSES: Comments on this proposal may be mailed in triplicate to: Federal Aviation Administration, Office of the Chief Counsel, Attention: Rules Docket (AGC–200), Docket No. 24251, 800 Independence Avenue SW., Washington, D.C. 20591, or delivered in triplicate to: Room 915G, 800 Independence Avenue SW., Washington, D.C. Comments must be marked: Docket No. 24251. Comments may be inspected in Room 915G weekdays, except Federal holidays, between 8:30 a.m. and 5:00 p.m. In addition, the FAA is maintaining an information docket of comments in the Office of the Assistant Chief Counsel (ANM–7), Federal Aviation Administration, Northwest Mountain Region, 1601 Lind Avenue SW, Renton, Washington 98055–4056. Comments in the information docket may be inspected in the Office of the Assistant Chief Counsel weekdays, except Federal holidays, between 7:30 a.m. and 4:00 p.m.

FOR FURTHER INFORMATION CONTACT: Mike McRae, FAA, Airframe and Propulsion Branch (ANM–112), Transport Airplane Directorate, Aircraft Certification Service, 1601 Lind Avenue SW., Renton, Washington 98055–4056; telephone (206) 227–2133.

SUPPLEMENTARY INFORMATION:

Comments Invited

Interested persons are invited to participate in this proposed rulemaking by submitting such written data, views, or arguments as they may desire. Comments relating to the environmental, energy, or economic impact that might result from adopting the proposals contained in this notice are invited. Substantive comments should be accompanied by cost estimates. Commenters should identify the regulatory docket or notice number and submit comments, in triplicate, to the Rules Docket address specified above. All comments received on or before the closing date for comments will be considered by the Administrator before taking action on this proposed rulemaking. The proposals contained in this notice may be changed in light of comments received. All comments will be available in the Rules Docket, both before and after the closing date for comments, for examination by interested persons. A report summarizing each substantive public contact with FAA personnel concerning this rulemaking will be filed in the docket. Commenters wishing the FAA to acknowledge receipt of their comments must submit with those comments a self-addressed, stamped postcard on which the following statement is made: ''Comments to Docket No. 24251.'' The postcard will be date stamped and returned to the commenter.

Availability of NPRM

Any person may obtain a copy of this NPRM by submitting a request to the Federal Aviation Administration, Office of Public Affairs, Attention: Public Information Center, APA–230, 800 Independence Avenue SW., Washington, D.C. 20591, or by calling (202) 267–3484. Communications must identify the notice number of this NPRM. Persons interested in being placed on a mailing list for future rulemaking documents should also request a copy of Advisory Circular No. 11–2A, Notice of Proposed Rulemaking Distribution System, which describes the application procedures.

Background

Section 25.954 (14 CFR 25.954) of the current airworthiness standards for transport category airplanes requires, in part, that any fuel system vents be designed to protect the fuel system from ignition by lightning strikes or electrostatic phenomenon. However, fuel system vents are not required to protect the fuel system from ignition during a post-crash ground fire. Improved fuel system vent fire protection is the subject of this NPRM.

To investigate the feasibility of reducing the severity or occurrence of airplane fires and explosions, the FAA held two public hearings in 1977. The first, in June, considered fire and explosion hazard reduction. The second, in November, dealt with the flammability of compartment interior materials. From the information obtained at those 1977 hearings, the FAA concluded that pending rulemaking actions on fuel tank explosion protection and flammability, toxicity, and smoke production concerning cabin materials were premature. The FAA decided to reexamine the technologies involved in reducing those hazards before going forward with any new rules.

To focus advice from the industry and the public at large for this review of available technology, the FAA formed the Special Aviation Fire and Explosion Reduction (SAFER) Advisory Committee on June 26, 1978. The committee consisted of a chairman and executive director, plus 24 representatives spanning the spectrum of international aviation interests.

The SAFER Committee's advice and recommendations to the FAA are embodied in a final report, FAA–ASF–80–4, dated June 26, 1980, Final Report of the Special Aviation Fire and Explosion Reduction (SAFER) Advisory Committee. This notice responds to the recommendation of the SAFER Committee concerning fuel system vent protection. Recommendations made in other areas are the subject of other rulemaking actions and are not relevant to this notice.

The SAFER Committee reviewed worldwide transport airplane accidents involving post-crash fuel tank explosions that had occurred since 1964 and concluded that with existing technology, the potential for post-crash explosion hazards could be reduced. The Committee considered that fuel system vent flame arrestors or surge tank explosion suppression systems used in some current airplanes to protect against lightning-induced ignition at fuel vent outlets might also be able to delay propagation of ground fires and the subsequent explosions, to provide additional time for safe evacuation of passengers. They also considered that a design practice in use on some current airplanes that provides for closure of both fuel tank-to-engine and engine fuel control shutoff valves during normal engine shutdown would also maximize the probability of engine fuel supply shutoff in post-crash fire accidents. On the basis of these

considerations, the SAFER Committee made the following regulatory recommendations to the FAA:

1. Amend 14 CFR part 25 to require fuel tank vent protection from ground fires by adding a new § 25.975(a)(7) to read: ''Each vent to atmosphere must be designed to minimize the possibility of external ground fires being propagated through the vent line to the tank vapor space, providing that the tank and vent structure remain intact.''

2. Amend part 25 to require design practices that maximize the probability of engine fuel supply shutoff in potential fire situations.

To implement the SAFER propulsion system recommendations, preliminary rulemaking action was initiated. Advance Notice of Proposed Rulemaking (ANPRM) No. 84–17 was published in the **Federal Register** (49 FR 38078, September 26, 1984) for the purpose of obtaining public comments, information, and data relative to adding new airworthiness standards applicable to transport category airplane fuel systems. The objective of the rulemaking proposed in Notice 84–17 was to develop airworthiness standards that would provide protection against fuel tank explosions following a post-crash ground fire, and that would assure engine and auxiliary power unit fuel supply shutoff to reduce the fire hazard from spilled fuel.

Comments were received from the general public, airplane manufacturers, and other interested organizations in the United States and Europe. Eight of the commenters, including the Airline Pilots Association (ALPA), Aerospace Industries Association of America (AIAA), and the Air Transport Association of America (ATA), support the proposed rule change regarding fuel system vent fire protection, whereas five commenters object to the proposal. The ATA response indicates that while comments received from their member airlines generally support the ''aircraft design enhancements'' discussed in the ANPRM, some remain unconvinced that the specific proposals will produce the desired results. They state, however, that even with minimal justification for such changes, it appears sufficiently promising to proceed with a more detailed cost-benefit analysis.

In general, commenters opposing the proposal argue that the added cost and complexity of the installed fuel system vent fire protection would exceed the very small safety benefits that might accrue from the installation. Further, they express concern that the critical vent system performance might be compromised by the installation of a flame arrestor. They believe the costs would not be commensurate with the benefits, although they submitted no facts or figures to support their contention. One commenter states that the occurrence of only two incidents in a 20-year period, only one of which would have been mitigated if the airplane had met the proposed fire protection standards, is not sufficient justification for requiring new standards. As discussed below, the FAA concludes that the projected benefits from this proposal are sufficient to warrant further action. Further, the costs and risks to vent performance are expected to be relatively small, since the majority of transport category airplanes currently incorporate flame arrestors in the fuel system vents. Many of these arrestor installations were expressly designed to provide protection from ground fires and have demonstrated the ability to safeguard vent system performance.

A preliminary regulatory evaluation was completed in November 1985. Although the analysis showed that the costs exceeded the benefits, it was noted that the analysis did not properly account for the potential magnitude of a hazardous situation created by a post-crash ground fire and a fuel tank explosion. As discussed below, to address these factors a new regulatory evaluation was completed that demonstrates that the benefits exceed the costs. Therefore, in light of the comments received in response to Notice 84–17, the SAFER Committee conclusions and recommendations, and the fact that public safety would be enhanced, the FAA finds the proposed changes to 14 CFR parts 25, 121, 125, and 135 are in the interest of public safety and should be promulgated. Nevertheless, the comments received in response to the advance notice were considered during the development of the regulatory evaluation for this notice.

While the regulatory evaluation for this notice was being prepared, Congress enacted Public Law 100–591, ''Aviation Safety Research Act of 1988.'' Section 9(a) of that Act resulted in the FAA publication of Advance Notice of Proposed Rulemaking (ANPRM) No. 89–11 (54 FR 18824, May 2, 1989). Notice 89–11 requested new information on the feasibility of installing ''crashworthy fuel systems.'' The comments received indicate that although additional information is needed, improvements in fuel system crashworthiness beyond those envisioned by the SAFER committee recommendation on fuel feed shutoff are feasible. Therefore, the fuel feed shutoff provisions of Notice 84–17 are being incorporated into the regulatory evaluation prepared for the proposed rulemaking resulting from Notice 89–11, which the FAA anticipates will more completely address the threat from fuel leakage following a survivable crashlanding.

Discussion

To minimize the possibility of propagation of external ground fires through the vent system, it would be necessary to design a flame arrestor or flame suppression device or system to prevent flame penetration and propagation through the airplane fuel tank vent system for a finite period of time. This time period should be no less than the time required for an external fire to heat fuel and vapors in a wing tank to its auto ignition temperature, or for an external fire to penetrate the undersurface of an empty wing tank, whichever is greater. Typically, this tank material is at least fire resistant; therefore, a period of protection of five (5) minutes is considered consistent with the currently accepted criteria for fire resistant materials. The FAA proposes to adopt a new § 25.975(a)(7) to require that each fuel tank be designed to prevent the propagation of flames from external fires through the fuel tank vents and any other external openings to fuel tank vapor spaces for a minimum of five minutes after a survivable crash landing when the fuel tank and the vent system remain intact.

In order to maximize the net potential benefits by increasing safety during survivable post-crash evacuations, the FAA considers it appropriate to require that the proposed changes to part 25 be incorporated in all transport category airplanes that are used in air carrier, air taxi, or commercial service under the provisions of 14 CFR parts 121, 125, or 135 as soon as practicable. Currently, about 75 percent of the fleet have a flame arrestor device that may comply with proposed § 25.975(a)(7). For airplanes manufactured after the effective date of the rule, compliance would be required within one year. For all other airplanes in operation, compliance would be required within two years. The FAA considers this timeframe to be sufficient to allow manufacturers and operators to design and install a fuel vapor flame suppression device that meets the new requirements. Parts 121, 125, and 135 would be revised accordingly.

Regulatory Evaluation

This section summarizes the full regulatory evaluation prepared by the FAA that provides more detailed estimates of the economic consequences of this proposed regulatory action. This summary and the full evaluation

quantify, to the extent practicable, estimated costs and anticipated benefits to the private sector, consumers, and Federal, State, and local governments.

Proposed changes to Federal regulations must undergo several economic analyses. First, Executive Order 12866 directs that each Federal agency shall propose or adopt a regulation only upon a reasoned determination that the benefits of the intended regulation justify its costs. Second the Regulatory Flexibility Act of 1980 requires agencies to analyze the economic impact of regulatory changes on small entities. Finally, the Office of Management and Budget directs agencies to assess the effects of regulatory changes on international trade. In conducting these analyses, the FAA has determined that this rule: (1) Would generate benefits that would justify its costs and is not a ''significant regulatory action'' as defined in the Executive Order; (2) is not significant as defined in Department of Transportation Regulatory Policies and Procedures; (3) would not have a significant impact on a substantial number of small entities; and (4) would not have a negative impact on international trade. These analyses, available in the docket, as summarized below.

As discussed earlier, several commenters to the ANPRM claim that the benefits of fuel system vent protection would not outweigh the costs. The FAA disagrees with these claims. The Special Aviation Fire and Explosion Reduction (SAFER) Advisory Committee identified four accidents worldwide in which effective fuel vent fire protection could have prevented or delayed post-crash fires (Malaysian Airways Comet 4, Singapore, 1964; TWA 707, Rome, 1964; BOAC 707, London, 1968; and Seaboard World DC–8, Stockton, 1969. After sustaining relatively minor impact damage, all four airplanes were destroyed by fire and explosions, resulting in 53 fatalities and 55 serious injuries. As summarized below, the number of fuel tank fires that this proposed rule might prevent is expected to be low, but the expected value of averting a single incident would exceed the estimated compliance costs.

Costs

The FAA assumes that manufacturers and operators would use vent flame arrestors as the most effective and economical means of compliance. For a representative large transport airplane, the FAA estimates that non-recurring costs would be approximately $700 and that recurring operating costs would be approximately $51 per year. Corresponding estimates for a representative small transport airplane are approximately $400 in non-recurring costs and $51 in recurring costs.

Section 25.954 currently requires, in part, that fuel systems be designed to prevent ignition within the fuel system by lightning strikes and other electrostatic phenomena. Flame arrestors and suppressors are offered as standard or optional equipment on most U.S. transport airplanes in current production. Approximately 75 percent of the transport airplane fleet currently have devices that might meet the criteria of the proposed rule. Until actual testing and evaluation is performed, however, it cannot be determined whether these devices would qualify. For purposes of this cost analysis, therefore, all relevant airplanes are assumed to be affected.

Based on this premise, approximately 11,048 airplanes would be affected during the first ten years following the effective date of the rule. applying the unit costs summarized above to this number of airplanes yields a total cost of $18.8 million (constant dollars), or $11.5 million discounted to present value. The average annualized costs per airplane are $142 for large transport airplanes and $120 for small transport airplanes.

Benefits

Since the four accidents identified by the SAFER Advisory Committee, there have been no known accidents in which fuel vent fire protection would have prevented or delayed post-crash fires. This is attributable in part to regulatory and voluntary initiatives aimed aircraft fire safety, such as the use of less volatile fuels, and improve safety performance that reduced the opportunities for post-crash fires.

Notwithstanding the absence of fuel tank fires in recent years and lacking other sufficient bases upon which to estimate the risks of future fires, the merits of the proposed rule can be assessed by considering the number of incidents that would need to be prevented to offset the costs of the rule. For large passenger-configured transport airplanes, the prevention of one fuel tank fire during the operating lives of such airplanes affected during the first ten years of the rule would yield expected benefits of approximately $106 million, or $40.1 million discounted to present value. This estimate reflects an accident involving a representative large transport airplane with 130 occupants and 20 percent fatality and 20 percent serious injury rates. Corresponding estimates for small passenger-configured and cargo-configured transport airlines would be $15 million ($5.7 million discounted) and $16 million ($6.0 million discounted), respectively.

Summary of Costs and Benefits

The FAA finds the proposed rule to be cost beneficial because the expected benefits of preventing just one post-crash fire outweigh the expected costs ($40.1 million in benefits versus $7.3 million in costs for large passenger-configured transport airplanes; $5.7 million in benefits versus $4.2 million in costs for small passenger-configured transport airplanes; and $6.0 million in benefits versus $5.7 million in costs for cargo-configured transport airplanes). If this action is not taken, a hazard would continue to exist, even though effective and low-cost means are available to minimize or eliminate it. To the extent that existing devices might satisfy the proposed criteria, the total incremental costs would be less than those summarized above.

Regulatory Flexibility Determination

The Regulatory Flexibility Act of 1980 (RFA) was enacted by Congress to ensure that small entities are not unnecessarily or disproportionately burdened by government regulations. The RFA requires agencies to evaluate alternative remedies when a rule would have a ''significant economic impact on a substantial number of small entities.'' The FAA has determined that the proposed rule would not have a significant impact on a substantial number of small entities.''

Trade Impact Statement

The proposed rule would have no impact on trade opportunities for U.S. firms doing business in foreign markets and foreign firms doing business in the U.S. market.

Federalism Implications

The regulations proposed herein would not have substantial direct effects on the States, on the relationship between the national government and the States, or on the distribution of power and responsibilities among the various levels of government. Therefore, in accordance with Executive Order 12612, it is determined that this proposal would not have sufficient federalism implications to warrant the preparation of a Federalism Assessment.

Conclusion

Because the installation of fuel system vent protection equipment is not expected to result in a substantial economic cost, the FAA has determined that this proposed regulation is not significant under Executive Order 12866. In addition, the FAA has

determined that this action is not significant as defined in Department of Transportation Regulatory Policies and Procedures (44 FR 11034, February 26 1979). Under the criteria of the Regulatory Flexibility Act, the FAA certifies that this proposed regulation, if adopted, would not have a significant economic impact, positive or negative, on a substantial number of small entities. A copy of the initial regulatory evaluation prepared for this proposal may be examined in the public docket or obtained from the person identified under the caption, **FOR FURTHER INFORMATION CONTACT**.

List of Subjects

14 CFR Part 25

Aircraft, Aviation safety, Reporting and recordkeeping requirements.

14 CFR Part 121

Air carriers, Aircraft, Airmen, Aviation safety, Charter flights, Reporting and recordkeeping requirements, Safety, Transportation.

14 CFR Part 125

Aircraft, Airmen, Aviation Safety, Reporting and recordkeeping requirements.

14 CFR Part 135

Air taxis, Aircraft, Airmen, Aircraft safety, Reporting and recordkeeping requirements.

The Proposed Amendments

Accordingly, the Federal Aviation Administration (FAA) proposes to amend 14 CFR parts 25, 121, 125, and 135 of the Federal Aviation Regulations (FAR) as follows:

PART 25—AIRWORTHINESS STANDARDS: TRANSPORT CATEGORY AIRPLANES

1. The authority citation for part 25 continues to read as follows:

Authority: 49 U.S.C. app. 1344, 1354(a), 1355, 1421, 1423, 1424, 1425, 1428, 1429, 1430; 49 U.S.C. 106(g); and 49 CFR 1.47(a).

2. By amending § 25.975 by removing the word ''and'' at the end of paragraph (a)(5), by removing the period at the end of paragraph (a)(6) and adding ''; and'' in its place, and by adding a new paragraph (a)(7) to read as follows:

§ 25.975 Fuel tank vents and carburetor vapor vents.

(a) * * *

(7) Each fuel tank vent must be designed to prevent the propagation of flames from external ground fires through the fuel tank vents and any other external openings to fuel tank vapor spaces for a minimum of five minutes after a survivable crash landing, when the fuel tank and the vent system remain intact.

* * * * *

PART 121—CERTIFICATION AND OPERATIONS: DOMESTIC FLAG, AND SUPPLEMENTAL AIR CARRIERS AND COMMERCIAL OPERATORS OF LARGE AIRCRAFT

3. The authority citation for part 121 continues to read as follows:

Authority: 49 U.S.C. app. 1354(a), 1355, 1356, 1357, 1401, 1421–1430, 1472, 1485, and 1502; 49 U.S.C. 106(g).

4. By revising § 121.316 to read as follows:

§ 121.316 Fuel systems.

(a) No person may operate a turbine-powered transport category airplane after October 30, 1991, unless it meets the fuel tank access cover criteria of § 25.963(e) of this chapter in effect on October 30, 1989.

(b) After [a date 1 year after the effective date of the amendment], no person may operate a transport category airplane manufactured on or after that date unless it is equipped with a fuel vapor flame suppression device that meets the requirements of § 25.975(a)(7) of this chapter.

(c) After [a date 2 years after the effective date of the amendment], no person may operate any other transport category airplane unless it is equipped with a fuel vapor flame suppression device that meets the requirements of § 25.975(a)(7) of this chapter.

PART 125—CERTIFICATION AND OPERATIONS: AIRPLANES HAVING A SEATING CAPACITY OF 20 OR MORE PASSENGERS OR A MAXIMUM PAYLOAD CAPACITY OF 6,000 POUNDS OR MORE

5. The authority citation for part 125 continues to read as follows:

Authority: 49 U.S.C. 1354, 1421 through 1430, and 1502; 49 U.S.C. 106(g), (Revised Pub. L. 97–449, January 12, 1983).

6. By adding a new § 125.214 to read as follows:

§ 125.214 Fuel systems.

(a) After [a date 1 year after the effective date of the amendment], no person may operate a transport category airplane manufactured on or after that date unless it is equipped with a fuel vapor flame suppression device that meets the requirements of § 25.975(a)(7) of this chapter.

(b) After [a date 2 years after the effective date of the amendment], no person may operate any other transport category airplane unless it is equipped with a fuel vapor flame suppression device that meets the requirements of § 25.975(a)(7) of this chapter.

PART 135—AIR TAXI OPERATORS AND COMMERCIAL OPERATORS

7. The authority citation for part 135 continues to read as follows:

Authority: 49 U.S.C. app. 1354(a), 1355(a), 1421 through 1431, and 1502; 49 U.S.C. 106(g); and 49 CFR 1.47(a).

8. By adding a new § 135.187 to subpart C to read as follows:

§ 135.187 Fuel systems.

(a) After [a date 1 year after the effective date of the amendment], no person may operate a transport category airplane manufactured on or after that date unless it is equipped with a fuel vapor flame suppression device that meets the requirements of § 25.975(a)(7) of this chapter.

(b) After [a date 2 years after the effective date of the amendment], no person may operate any other transport category airplane unless it is equipped with a fuel vapor flame suppression device that meets the requirements of § 25.975(a)(7) of this chapter.

Issued in Washington, D.C., on January 20, 1995.

Elizabeth Yoest,

Acting Director, Aircraft Certification Service.

[FR Doc. 95–2115 Filed 2–1–95; 8:45 am]

BILLING CODE 4910–13–M

federal register

Thursday
February 2, 1995

Part VII

Department of Agriculture

Agricultural Marketing Service

7 CFR Part 70

Voluntary Poultry Grade Standards; Final Rule

DEPARTMENT OF AGRICULTURE

Agricultural Marketing Service

7 CFR Part 70

[Docket No. PY–92–003]

RIN 0581–AA61

Voluntary Poultry Grade Standards

AGENCY: Agricultural Marketing Service, USDA.

ACTION: Final rule.

SUMMARY: The Agricultural Marketing Service (AMS) is adopting as a final rule the provisions of the proposed rule which updated the voluntary poultry grade standards in response to advancements within the poultry industry and changes in consumer preferences. The revisions will amend existing regulations with regard to discolorations, the definition of exposed flesh, and the procurement grades in order to simplify interpretation, improve uniformity, and strengthen effectiveness. The revisions will also establish new grading criteria for large poultry parts to fulfill industry's request for voluntary grading standards for new products.

EFFECTIVE DATE: March 6, 1995.

FOR FURTHER INFORMATION CONTACT: Janice L. Lockard, Chief, Standardization Branch, (202) 720–3506.

SUPPLEMENTARY INFORMATION: This rule has been determined not significant for purposes of Executive Order 12866 and has not been reviewed by the Office of Management and Budget.

This rule has been reviewed under Executive Order 12778, Civil Justice Reform. It is not intended to have retroactive effect. It would not preempt any State or local laws, regulations, or policies, unless they present an irreconcilable conflict with this rule. Prior to any judicial challenges to the application of the provisions of this rule, appropriate administrative procedures as set forth in 7 CFR 70.100 through 70.106 must be exhausted.

The AMS Administrator has determined that this rule will not have a significant economic impact on a substantial number of small entities, as defined by the Regulatory Flexibility Act (5 U.S.C. 601 *et seq.*).

The information collection requirement that appears in section 70.210(e) of this rule has been previously approved by the Office of Management and Budget and assigned OMB Control No. 0581–0127, under the Paperwork Reduction Act of 1980.

Background

Poultry grading is a voluntary program provided under the authority of the Agricultural Marketing Act of 1946, as amended, and is offered on a fee-for-service basis. It is designed to assist the orderly marketing of poultry products. Quality in practical terms refers to the usability, desirability, and value of a product; as well as its marketability. Grade standards identify and measure degrees of quality, and permit important quality attributes to be evaluated uniformly and accurately. In order to continue equity among all persons affected by grade standards, from the producer to the consumer, the standards must keep abreast of changes in consumer preferences as well as advancements and trends in industry production and marketing practices.

The poultry grade standards were last amended effective June 9, 1986. Those changes included establishing a standard for quality of raw, boneless, skinless poultry products and clarifying the tolerance for exposed flesh and discoloration in ready-to-cook poultry carcasses.

Since 1986, there has been even greater consumer utilization of convenience foods and demand for low-fat, skinless products. Constant innovations and accomplishments have also occurred within the poultry industry: (1) Improved quality and uniformity (conformation and fleshing through technological advances and efficient production practices); (2) new processing techniques; (3) effective automation; (4) new products; and (5) new marketing trends.

Proposed Changes

The amendments revise the existing standard for discolorations on skin and flesh in grade A and B quality poultry products and reclassify skin bruises as a discoloration. For A quality carcasses and parts (§ 70.220), slight discolorations on skin and flesh will be allowed provided the discoloration does not detract from the appearance of the product. Clarification is further made to define discolorations and to include intensity levels allowed and the total aggregate area of permitted discolorations.

For B quality poultry products (§ 70.221), the limit for discolorations will be moderately shaded areas and the carcass or part will be free of serious defects. This revision is necessary to accurately classify discolorations considered normal for the kind and class of poultry being graded.

Out-dated terms, such as ''blue back'' (§ 70.220), that refer to conditions presently not found, are removed. Technological advancements in poultry production practices have improved uniformity among poultry products. ''Blue back'' has become a rare finding thereby making it insignificant for present poultry marketing.

The descriptions of grade criteria for discolorations in poultry roasts (§ 70.230) is clarified. The revision allows slight discolorations or other skin discolorations which do not detract from the appearance of the roast. The aggregate area of all discolorations is defined and tolerances are based on minimum and maximum weight. In addition, the amount of skin covering poultry roasts is reduced and it is permitted to overlap without limit, provided fat has been removed from specific areas of the carcass. Current grade criteria for poultry roasts do not provide a margin for accepting product tolerances based on the weight of the product, nor do they permit the overlapping of skin on roasts.

In addition, the grade criteria for discolorations in boneless breast and thigh meat (§ 70.231) is clarified. The current regulation provides no margin for accepting product with slight discolorations even though they may not detract from the appearance of the product.

Also amended are the grade factors for exposed flesh in A quality poultry products (§ 70.220). Current grade factors were developed when the primary method for disjointing whole carcasses was by hand. They do not provide for insignificant cuts and tears on the breast and legs of whole carcasses, or on poultry parts, that may be the result of the newer processing technologies and equipment used today. Data from the Agency's 1991 Poultry Defect Survey indicates that the amendments would not significantly affect the overall acceptable quality levels of the product. These cuts and tears frequently do not detract from the appearance or acceptability of the product. The entire paragraph has been rewritten to more clearly incorporate these changes. Because newer methods for disjointing whole birds also affect the thigh portion of poultry parts, the grade criteria for A quality thighs is clarified in § 70.220(f) ''Disjointed and broken bones, missing parts, and trimming.''

In B quality poultry products, trimming is removed from § 70.221(e) ''Exposed flesh'' and is more fully addressed in § 70.221(f) ''Disjointed and broken bones, missing parts, and trimming.''

Procurement Grades I and II (§§ 70.270 and 70.271) are deleted.

These grades were established in 1960, for poultry suitable for institutional adaptation and further processing. Today, the use of procurement grades and the need to provide grade standards below Grade C are virtually non-existent.

The amendments include definitions for front poultry halves and rear poultry halves (§ 70.210), products that are newer retail packs; add tenderloins to the regulations for boneless poultry breast and thigh meat (§ 70.231); and add a new standard for skinless carcasses and parts (§ 70.232). Industry had requested that the Agency broaden the types of products to which the standards apply. These changes give industry flexibility in marketing additional types of graded poultry products. Consumer preferences for a leaner, tender cut of poultry has caused the demand for tenderloin meat to grow and a standard is needed to ensure a quality product. And consumers wanting less fat in the diet will have a larger variety of skinless USDA graded poultry products from which to choose. The Agency has been working with industry, through test applications, to determine possible changes and agrees that the amendments are feasible.

The definition for ''Free from protruding pinfeathers'' (§ 70.1) is revised by adding the terms ''diminutive feathers'' and ''hairs''. In addition, the grade criteria for this factor in A quality (§ 70.220) and B quality (§ 70.221) is clarified.

The amendments require that all scales provided for the graders' use be graduated uniformly whether used for individual products or quantities of product (§ 70.15). This will enable a more accurate application of tolerances during test-weighing procedures, especially as the use of digital scales increases.

The amendments will update the regulations to comply with current statutory requirements regarding providing grading services and licensing graders without discrimination due to age or disabilities (§ 70.5).

Other miscellaneous changes will remove obsolete material, correct erroneous wording, and otherwise clarify, update, and simplify the regulations. These changes are editorial or housekeeping in nature and impose no new requirements.

Comments

A proposed rule to amend the poultry standards and grades in 7 CFR Part 70 to reflect these innovations was published in the **Federal Register** (59 FR 52469) on October 18, 1994. Comments on the proposed rule were solicited from interested parties until November 17, 1994.

During the 30-day comment period, the Agency received six comments, four from poultry processors and two from national industry associations. All commentors were in basic agreement with the proposed changes. However, three processors and one association also called attention to several items that were of concern.

There were several comments about the definitions for discolorations: (1) they should apply only to discolorations on muscle tissue, not to any loose blood that may collect in the wing socket area; (2) they are too subjective and need further clarification to avoid inconsistent interpretation; (3) it is and would be cumbersome for graders to visualize circular aggregate areas of discoloration and to determine their dimensions; (4) color photographs and standard color chips would be helpful.

Discolorations on poultry skin and flesh have always been part of the grade standards. Likewise, blood on or under the skin has always been considered to be a discoloration. Blood may build up in the wing socket area during the hanging, stunning, and evisceration procedures, but it can usually be removed by further rinsing the poultry, thus upgrading the product. The proposed regulations do not change these facts, but they do define discolorations in terms of intensity levels and they include the total aggregate area of permitted discolorations.

The Agency recognizes that words alone cannot totally illustrate degrees of discoloration or that visual inspection alone cannot precisely determine the actual size of a discoloration. Therefore, the Agency is developing two grading aids that will be provided to all poultry grading personnel and will be available to others for a fee. One aid is a color photo series that will show various defects, including discolorations, on chickens, turkeys, and ducks. Each species has its own unique characteristics and requires specific criteria to classify any defects. The other aid is a plastic template with circular areas of specific dimensions that coincide with the various aggregate areas of defects that are permitted.

Other comments were related to the definition of ''Free from protruding pinfeathers, diminutive feathers, or hairs:'' (1) it was too subjective or ambiguous; (2) it could lead to a wide range of interpretation or inconsistent downgrading; (3) actual numbers and sizes should be established for feathers and hairs.

Defeathering has always been part of the poultry grade standard and the Agency believes that the proposed revisions will help clarify the regulations. However, the Agency will consider undertaking further study concerning the defeathering process.

In the meantime, in consideration of preliminary discussions with industry resulting in the proposed regulatory changes and overall acceptance thereof, the regulatory text contained in the proposed rule is hereby adopted.

List of Subjects in 7 CFR Part 70

Food grades and standards, Food labeling, Poultry and poultry products, Rabbits, Reporting and recordkeeping requirements.

For reasons set forth in the preamble, 7 CFR Part 70 is amended as follows:

PART 70—VOLUNTARY GRADING OF POULTRY PRODUCTS AND RABBIT PRODUCTS AND U.S. CLASSES, STANDARDS, AND GRADES

1. The authority citation for Part 70 continues to read as follows:

Authority: 7 U.S.C. 1621–1627.

2. In section 70.1, the definition for ''Free from protruding pinfeathers'' is revised and new definitions for ''Lightly shaded discolorations,'' ''Moderately shaded discolorations,'' and ''Slight discolorations'' are added to read as follows:

§ 70.1 Definitions.

* * * * *

Free from protruding pinfeathers, diminutive feathers, or hairs means that a poultry carcass, part, or poultry product with the skin on is free from protruding pinfeathers, diminutive feathers, or hairs which are visible to a grader during an examination at normal grading speeds. However, a poultry carcass, part, or poultry product may be considered as being free from protruding pinfeathers, diminutive feathers, or hairs if it has a generally clean appearance and if not more than an occasional protruding pinfeather, diminutive feather, or hair is evidenced during a more careful examination.

* * * * *

Lightly shaded discolorations on poultry are generally reddish in color and are usually confined to areas of the skin or the surface of the flesh.

Moderately shaded discolorations on poultry skin or flesh are areas that are generally dark red or bluish, or are areas of flesh bruising. Moderately shaded discolorations are free from blood clots that are visible to a grader during an examination of the carcass, part, or

poultry product at normal grading speeds.

* * * * *

Slight discolorations on poultry skin or flesh are areas of discoloration that are generally pinkish in color and do not detract from the appearance of the carcass, part, or poultry product.

* * * * *

3. Section 70.5 is revised to read as follows:

§ 70.5 Nondiscrimination.

The conduct of all services and the licensing of graders and inspectors under these regulations shall be accomplished without regard to race, color, national origin, religion, age, sex, or disability.

4. In section 70.15, paragraph (c) is revised to read as follows:

§ 70.15 Equipment and facilities to be furnished for use of graders in performing service on a resident basis.

* * * * *

(c) Scales graduated in tenths of a pound or less for weighing carcasses, parts, or products individually or in containers up to 100 pounds, and test weights for such scales.

* * * * *

5. In section 70.210, paragraphs (a), (b), and (e) introductory text are revised; paragraphs (e)(10) through (e)(16) are redesignated as paragraphs (e)(12) through (e)(18) respectively; and new paragraphs (e)(10) and (e)(11) are added to read as follows:

§ 70.210 General.

(a) The United States standards for quality contained in this subpart are applicable to individual carcasses of ready-to-cook poultry, to parts of ready-to-cook poultry as described in paragraph (e) of this section, and to individual units of specified poultry food products.

(b) Carcasses, parts, or poultry food products found to be unsound, unwholesome, or otherwise unfit for human food in whole or in part, shall not be given any of the quality designations specified in the United States standards for quality contained in this subpart.

* * * * *

(e) The standards of quality are applicable to poultry parts cut in the manner described in this section. Similar parts cut in a manner other than described in this section may be grade identified only when approved by the Administrator upon a determination that the labeling for such parts accurately describes the product. Requests for such approval shall be made to the national supervisor.

* * * * *

(10) ''Front poultry halves'' shall include the full breast with corresponding back portion, and may or may not include wings, wing meat, or portions of wing.

(11) ''Rear poultry halves'' shall include both legs and adjoining portion of the back attached.

* * * * *

6. In section 70.220, paragraphs (d), (e), (f), (g), and (h)(3) are revised and a new paragraph (h)(4) is added to read as follows:

§ 70.220 A Quality.

* * * * *

(d) *Defeathering.* The carcass or part has a clean appearance, especially on the breast. The carcass or part is free of protruding pinfeathers, diminutive feathers, and hairs.

(e) *Exposed flesh.* The requirements contained in this section are applicable to exposed flesh resulting from cuts, tears, and missing skin.

(1) The carcass may have exposed flesh due to cuts, tears, and missing skin, provided the aggregate area of all exposed flesh does not exceed an area equivalent to the area of a circle of the diameter specified in the following table:

Carcass weight		Maximum aggregate area permitted	
Minimum	Maximum	Breast and legs	Elsewhere
None	2 lb	¼ in	1 in.
Over 2 lb	6 lb	¼ in	1½ in.
Over 6 lb	16 lb	½ in	2 in.
Over 16 lb	None	½ in	3 in.

(2) Large carcass parts, specifically halves, front halves, or rear halves, may have exposed flesh due to cuts, tears, and missing skin, provided the aggregate area of all exposed flesh does not exceed an area equivalent to the area of a circle of the diameter specified in the following table:

Carcass weight		Maximum aggregate area permitted	
Minimum	Maximum	Breast and legs	Elsewhere
None	2 lb	¼ in	½ in.
Over 2 lb	6 lb	¼ in	¾ in.
Over 6 lb	16 lb	½ in	1 in.
Over 16 lb	None	½ in	1½ in.

(3) Other parts may have exposed flesh due to cuts, tears, and missing skin, provided the aggregate area of all exposed flesh does not exceed an area equivalent to the area of a circle of the diameter specified in the following table:

Carcass weight		Maximum aggregate area permitted
Minimum	Maximum	Parts
None	2 lb	¼ in.
Over 2 lb	6 lb	¼ in.
Over 6 lb	16 lb	½ in.
Over 16 lb	None	½ in.

(4) For all parts, trimming of the skin along the edge is allowed, provided that at least 75 percent of the normal skin cover associated with the part remains attached, and further provided that the remaining skin uniformly covers the outer surface in a manner that does not detract from the appearance of the part.

(5) In addition, the carcass or part may have cuts or tears that do not expand or significantly expose flesh, provided the aggregate length of all such cuts and tears does not exceed a length tolerance using the dimensions listed in the following table:

Carcass weight		Maximum aggregate length permitted	
Minimum	Maximum	Breast and legs, and parts	Elsewhere on carcass
None	2 lb	¼ in	1 in.
Over 2 lb	6 lb	¼ in	1½ in.
Over 6 lb	16 lb	½ in	2 in.
Over 16 lb	None	½ in	3 in.

(f) *Disjointed and broken bones and missing parts.* (1) Parts are free of broken bones. Parts are free of disjointed bones except that thighs with back portions, legs, or leg quarters may have the femur disjointed from the hip joint. The carcass is free of broken bones and has not more than one disjointed bone.

(2) The wing tips may be removed at the joint, and in the case of ducks and geese, the parts of the wing beyond the second joint may be removed, if removed at the joint and both wings are so treated. The tail may be removed at the base.

(3) Cartilage separated from the breastbone is not considered as a disjointed or broken bone.

(g) *Discoloration.* The requirements contained in this section are applicable to discolorations of the skin and flesh of poultry, and the flesh of skinless poultry, as defined in the definitions in § 70.1.

(1) The carcass, parts derived from the carcass, or large carcass parts may have slight discolorations, provided the discolorations do not detract from the appearance of the product.

(2) The carcass may have lightly shaded areas of discoloration, provided the aggregate area of all discolorations does not exceed an area equivalent to the area of a circle of the diameter specified in the following table. Evidence of incomplete bleeding, such as more than an occasional slightly reddened feather follicle, is not permitted.

Carcass weight		Maximum aggregate area permitted	
Minimum	Maximum	Breast and legs	Elsewhere on carcass
None	2 lb	¾ in	1¼ in.
Over 2 lb	6 lb	1 in	2 in.
Over 6 lb	16 lb	1½ in	2½ in.
Over 16 lb	None	2 in	3 in.

(3) The carcass may have moderately shaded areas of discoloration and discolorations due to flesh bruising, provided:

(i) They are not on the breast or legs, except for the area adjacent to the hock joint;

(ii) They are free of clots; and

(iii) They may not exceed an aggregate area equivalent to the area of a circle of the diameter specified in the following table:

Carcass weight		Maximum aggregate area permitted	
Minimum	Maximum	Hock area of legs	Elsewhere on carcass
None	2 lb	¼ in	⅝ in.
Over 2 lb	6 lb	½ in	1 in.
Over 6 lb	16 lb	¾ in	1¼ in.
Over 16 lb	None	1 in	1½ in.

(4) Parts, other than large carcass parts, may have lightly shaded areas of discoloration, provided the aggregate area of all discolorations does not exceed an area equivalent to the area of a circle of the diameter specified in the following table. Evidence of incomplete bleeding, such as more than an occasional slightly reddened feather follicle, is not permitted.

Carcass weight		Maximum aggregate area permitted
Minimum	Maximum	Parts
None	2 lb	½ in.
Over 2 lb	6 lb	¾ in.
Over 6 lb	16 lb	1 in.
Over 16 lb	None	1¼ in.

(5) Parts, other than large carcass parts, may have moderately shaded areas of discoloration and discolorations due to flesh bruising, provided:

(i) They are not on the breast or legs, except for the area adjacent to the hock joint;

(ii) They are free of clots; and

(iii) They may not exceed an aggregate area equivalent to the area of a circle of the diameter specified in the following table:

Carcass weight		Maximum aggregate area permitted
Minimum	Maximum	Parts
None	2 lb	¼ in.
Over 2 lb	6 lb	⅜ in.
Over 6 lb	16 lb	½ in.
Over 16 lb	None	⅝ in.

(6) Large carcass parts, specifically halves, front halves, or rear halves, may have lightly shaded areas of discoloration, provided the aggregate area of all discolorations does not exceed an area equivalent to the area of a circle of the diameter specified in the following table:

Carcass weight		Maximum aggregate area permitted	
Minimum	Maximum	Breast and legs	Elsewhere
None	2 lb	½ in	1 in.
Over 2 lb	6 lb	¾ in	1½ in.
Over 6 lb	16 lb	1 in	2 in.
Over 16 lb	None	1¼ in	2½ in.

(7) Large carcass parts, specifically halves, front halves, or rear halves, may have moderately shaded areas of discoloration and discolorations due to flesh bruising, provided:

(i) They are not on the breast or legs, except for the area adjacent to the hock joint;

(ii) They are free of clots; and

(iii) They may not exceed an aggregate area equivalent to the area of a circle of the diameter specified in the following table:

Carcass weight		Maximum aggregate area permitted	
Minimum	Maximum	Hock area of legs	Elsewhere
None	2 lb	¼ in	½ in.
Over 2 lb	6 lb	⅜ in	¾ in.
Over 6 lb	16 lb	½ in	1 in.
Over 16 lb	None	⅝ in	1¼ in.

(h) * * *

(3) Occasional small areas of clear, pinkish, or reddish colored ice.

(4) Occasional small areas of dehydration, white to light grey in color, on the flesh of skinless carcasses, parts, or specified poultry food products not to exceed the permitted aggregate area for discolorations as provided in § 70.220(g).

* * * * *

7. In section 70.221, paragraphs (d), (e), (f), and (g) are revised to read as follows:

§ 70.221 B Quality.

* * * * *

(d) *Defeathering.* The carcass or part may have a few protruding pinfeathers, diminutive feathers, or hairs which are scattered sufficiently so as not to appear numerous.

(e) *Exposed flesh.* A carcass may have exposed flesh provided that no part on the carcass has more than one-third of the flesh exposed. A part may have no more than one-third of the flesh normally covered by skin exposed.

(f) *Disjointed and broken bones, missing parts, and trimming.* (1) Parts may be disjointed, but are free of broken bones. The carcass may have two disjointed bones, or one disjointed bone and one nonprotruding broken bone.

(2) Parts of the wing beyond the second joint may be removed at a joint. The tail may be removed at the base.

(3) Slight trimming of the carcass is permitted provided the meat yield of any part on the carcass is not appreciably affected. A moderate amount of meat may be trimmed around the edge of a part to remove defects. The back may be trimmed in an area not wider than the base of the tail to the area halfway between the base of the tail and the hip joints.

(g) *Discolorations of the skin and flesh.* (1) Discolorations are limited to moderately shaded areas and the carcass or part is free of serious defects. Evidence of incomplete bleeding shall be no more than slight. Discolorations due to flesh bruising shall be free of clots and may not exceed one-half the

total aggregate area of permitted discoloration.

(2) For a carcass, the aggregate area of all discolorations shall not exceed an area equivalent to the area of a circle of the diameter specified in the following table:

Carcass weight		Maximum aggregate area permitted	
Minimum	Maximum	Breast and legs	Elsewhere
None	2 lb	1¼ in	2¼ in.
Over 2 lb	6 lb	2 in.	3 in.
Over 6 lb	16 lb	2½ in	4 in.
Over 16 lb	None	3 in	5 in.

(3) For a part, the aggregate area of all discolorations for a part shall not exceed an area equivalent to the area of a circle having a diameter specified in the following table:

Carcass weight		Maximum aggregate area permitted
Minimum	Maximum	Breast, legs, and parts
None	2 lb	¾ in.
Over 2 lb	6 lb	1 in.
Over 6 lb	16 lb	1½ in.
Over 16 lb	None	1¾ in.

(4) Large carcass parts, specifically halves, front halves, or rear halves, may have areas of discoloration, provided the aggregate area does not exceed an area equivalent to the area of a circle of the diameter specified in the following table:

Carcass weight		Maximum aggregate area permitted	
Minimum	Maximum	Breast and legs	Elsewhere
None	2 lb	1 in	1¼ in.
Over 2 lb	6 lb	1½ in	1¾ in.
Over 6 lb	16 lb	2 in	2½ in.
Over 16 lb	None	2½ in	3 in.

* * * * *

8. In section 70.230, paragraph (c) is removed; paragraphs (d) through (j) are redesignated as paragraphs (f) through (l) respectively; new paragraphs (c), (d), and (e) are added; and paragraph (b) and newly designated paragraphs (f), and (l) are revised to read as follows:

§ 70.230 Poultry roast—A Quality.

* * * * *

(b) Bones, tendons, cartilage, bruises, and blood clots shall be removed from the meat.

(c) The roast has a clean appearance and is free of protruding pinfeathers, diminutive feathers, and hair.

(d) Skin for covering a roast may include the skin covering the crop area and the neck skin up to the whisker if the fatty blubber, spongy fat, and membranes have been removed from these areas.

(e)(1) Slight discolorations are permitted on the skin or flesh provided the discoloration does not detract from the appearance of the product. Other discolorations are limited to lightly shaded areas of discolorations that do not exceed the total aggregate area of permitted discoloration as described in this section.

(2) The aggregate area of all lightly shaded discolorations for a poultry roast shall not exceed an area equivalent to the area of a circle of the diameter specified in the following table:

Roast weight		Maximum aggregate area permitted
Minimum	Maximum	
None	2 lb	¾ inch.
Over 2 lb	6 lb	1 inch.
Over 6 lb	16 lb	1½ inches.
Over 16 lb	None	2 inches.

(f) Fifty percent or more of the outer surface of the product shall be covered with skin, whether attached to the meat or used as a wrap. Skin covering may overlap without limit in all areas provided the fatty tissue has been removed from the sternal and pectoral feather tracts. The combined weight of the skin and fat used to cover the outer surface and used as a binder shall not exceed 15 percent of the total net weight of the product.

* * * * *

(l) Product packaged in an oven-ready container shall meet all the requirements of the paragraphs in this section, except that with respect to skin covering, the exposed surface of the roast need not be covered with skin. If skin is used to cover the exposed surface, it may be whole or emulsified. Additionally, for roasts packaged in oven-ready containers, comminuted (mechanically deboned) meat may be substituted in part for skin, but may not exceed 8 percent of the total weight of the product.

9. In section 70.231, the section heading, the introductory text, and paragraphs (d) and (e) are revised to read as follows:

§ 70.231 Boneless poultry breast, thigh, and tenderloin—A Quality.

The standards of quality contained in this section are applicable to raw poultry products labeled as ready-to-cook boneless poultry breasts, thighs, or tenderloins, or as ready-to-cook boneless poultry breast fillets or thigh fillets, or with words of similar import.

* * * * *

(d) Skinless breasts, thighs, or tenderloins shall be free of cartilage, blood clots, bruises, tendons (except for tenderloins), and discolorations other than slight discolorations, provided they do not detract from the appearance of the product. Minor flesh abrasions due to preparation techniques are permitted.

(e) Trimming is permitted around the outer edges of whole breasts, half breasts, and thighs provided the trimming results in at least one-fourth of the breast or one-half of the thigh remaining intact and further, must result in a portion that approximates the same symmetrical appearance of the original part. Trimming must result in a smooth outer surface with no angular cuts, tears, or holes in the meat portion of the product. Trimming of the inner muscle surface is permitted provided it results in a relatively smooth appearance.

10. In subpart B, a new section 70.232 is added to read as follows:

§ 70.232 Skinless carcasses and parts—A Quality

The standards of quality contained in this section are applicable to raw ready-to-cook whole poultry carcasses and parts.

(a) The parts shall be cut as specified in § 70.210.

(b) The skin shall be removed in a manner without undue mutilation of adjacent muscle. Minor flesh abrasions due to preparation techniques are permitted.

(c) Skinless carcasses or parts shall meet A quality ready-to-cook requirements as outlined in § 70.220(a), (b), (f), and (g).

11. In section 70.240, paragraph (a) is revised and paragraph (d) is removed to read as follows:

§ 70.240 General

(a) All terms in the United States standards for quality set forth in §§ 70.210 through 70.232 shall, when used in §§ 70.240 through 70.252, have the same meaning as when used in said standards.

* * * * *

12. Sections 70.270 and 70.271 are removed, as well as the undesignated center heading preceding § 70.270.

Dated: January 27, 1995.

Lon Hatamiya,

Administrator.

[FR Doc. 95–2583 Filed 2–1–95; 8:45 am]

BILLING CODE 3410–02–P

federal register

Part VIII

Congressional Budget Office

Notice of Transmittal of Sequestration Preview Report for Fiscal Year 1996 to Congress and the Office of Management and Budget

Management and Budget

Pursuant to Section 254(b) of the Balanced Budget and Emergency Deficit Control Act of 1985 (2 U.S.C. 904(b)), the Congressional Budget Office hereby reports that it has submitted its Sequestration Preview Report for Fiscal Year 1996 to the House of Representatives, the Senate, and the Office of Management and Budget.

Stanley L. Greigg,

Director, Office of Intergovernmental Relations, Congressional Budget Office.

[FR Doc. 95–2774 Filed 2–1–95; 9:00 am]

BILLING CODE 95–0702–M

Reader Aids

Federal Register

Vol. 60, No. 22

Thursday, February 2, 1995

INFORMATION AND ASSISTANCE

Federal Register

Index, finding aids & general information	**202–523–5227**
Public inspection announcement line	**523–5215**
Corrections to published documents	**523–5237**
Document drafting information	**523–3187**
Machine readable documents	**523–4534**

Code of Federal Regulations

Index, finding aids & general information	**523–5227**
Printing schedules	**523–3419**

Laws

Public Laws Update Service (numbers, dates, etc.)	**523–6641**
Additional information	**523–5230**

Presidential Documents

Executive orders and proclamations	**523–5230**
Public Papers of the Presidents	**523–5230**
Weekly Compilation of Presidential Documents	**523–5230**

The United States Government Manual

General information	**523–5230**

Other Services

Data base and machine readable specifications	**523–4534**
Guide to Record Retention Requirements	**523–3187**
Legal staff	**523–4534**
Privacy Act Compilation	**523–3187**
Public Laws Update Service (PLUS)	**523–6641**
TDD for the hearing impaired	**523–5229**

ELECTRONIC BULLETIN BOARD

Free **Electronic Bulletin Board** service for Public Law numbers, Federal Register finding aids, and list of documents on public inspection. **202–275–0920**

FAX-ON-DEMAND

You may access our Fax-On-Demand service. You only need a fax machine and there is no charge for the service except for long distance telephone charges the user may incur. The list of documents on public inspection and the daily Federal Register's table of contents are available using this service. The document numbers are 7050-Public Inspection list and 7051-Table of Contents list. The public inspection list will be updated immediately for documents filed on an emergency basis.
NOTE: YOU WILL ONLY GET A LISTING OF DOCUMENTS ON FILE AND NOT THE ACTUAL DOCUMENT. Documents on public inspection may be viewed and copied in our office located at 800 North Capitol Street, N.W., Suite 700. The Fax-On-Demand telephone number is: **301–713–6905**

FEDERAL REGISTER PAGES AND DATES, FEBRUARY

5997–6382.....1
6383–6646.....2

CFR PARTS AFFECTED DURING FEBRUARY

At the end of each month, the Office of the Federal Register publishes separately a List of CFR Sections Affected (LSA), which lists parts and sections affected by documents published since the revision date of each title.

3 CFR

Executive Order:
12898 (Amended by EO 12948).....6381
12948.....6381

5 CFR

211.....6595
214.....6383
317.....6383
319.....6383
353.....6595
359.....6383
430.....6595
534.....6383
2635.....6390
Proposed Rules:
532.....6041

7 CFR

70.....6638
319.....5997
322.....5997
372.....6000
985.....6392
997.....6394
1001.....6606
1002.....6606
1004.....6606
1005.....6606
1006.....6606
1007.....6606
1011.....6396, 6606
1012.....6606
1013.....6606
1030.....6606
1032.....6005, 6606
1033.....6606
1036.....6606
1040.....6606
1044.....6606
1046.....6606
1049.....6606
1050.....6606
1064.....6606
1065.....6606
1068.....6606
1075.....6606
1076.....6606
1079.....6606
1093.....6606
1094.....6606
1096.....6606
1106.....6606
1108.....6606
1124.....6606
1126.....6606
1131.....6606
1134.....6606
1135.....6606
1137.....6606
1138.....6606
1139.....6606
1485.....6352
Proposed Rules:
29.....6452, 6453

9 CFR

Proposed Rules:
94.....6454

12 CFR

Proposed Rules:
208.....6042
225.....6042

14 CFR

25.....6616
39.....6397
97.....6398
121.....6616
135.....6616
Proposed Rules:
Ch. I.....6045
25.....6456, 6632
39.....6045, 6459
71.....6461, 6462
121.....6632
125.....6632
135.....6632

16 CFR

Proposed Rules:
Ch. 1.....6463

19 CFR

Proposed Rules:
134.....6464

24 CFR

907.....6399

30 CFR

914.....6400
926.....6006

31 CFR

575.....6376

32 CFR

199.....6013

36 CFR

7.....6021
Proposed Rules:
242.....6466

39 CFR

Proposed Rules:
111.....6047

40 CFR

52.....6022, 6027, 6401

80.....6030
180.....6032
Proposed Rules:
52 .....6049, 6051, 6052, 6467
180.....6052
261.....6054

44 CFR

64.....6034, 6035
65.....6403, 6404
67.....6407
Proposed Rules:
67.....6470

46 CFR

Proposed Rules:
381.....6067
572.....6482

47 CFR

Proposed Rules:
Ch. 1 6482
73 .....6068, 6483, 6490

48 CFR

Proposed Rules:
28.....6602
32.....6602
52.....6602

49 CFR

571.....6411

50 CFR

229.....6036
651.....6446
663.....6039
676.....6448
Proposed Rules:
100.....6466