3–14–95
Vol. 60 No. 49
Pages 13613–13888

federal register

Tuesday
March 14, 1995

Briefings on How To Use the Federal Register
For information on briefings in Washington, DC, and Dallas, TX, see announcement on the inside cover of this issue.

FEDERAL REGISTER Published daily, Monday through Friday, (not published on Saturdays, Sundays, or on official holidays), by the Office of the Federal Register, National Archives and Records Administration, Washington, DC 20408, under the Federal Register Act (49 Stat. 500, as amended; 44 U.S.C. Ch. 15) and the regulations of the Administrative Committee of the Federal Register (1 CFR Ch. I). Distribution is made only by the Superintendent of Documents, U.S. Government Printing Office, Washington, DC 20402.

The **Federal Register** provides a uniform system for making available to the public regulations and legal notices issued by Federal agencies. These include Presidential proclamations and Executive Orders and Federal agency documents having general applicability and legal effect, documents required to be published by act of Congress and other Federal agency documents of public interest. Documents are on file for public inspection in the Office of the Federal Register the day before they are published, unless earlier filing is requested by the issuing agency.

The seal of the National Archives and Records Administration authenticates this issue of the **Federal Register** as the official serial publication established under the Federal Register Act. 44 U.S.C. 1507 provides that the contents of the **Federal Register** shall be judicially noticed.

The **Federal Register** is published in paper, 24x microfiche and as an online database through *GPO Access*, a service of the U.S. Government Printing Office. The online database is updated by 6 a.m. each day the **Federal Register** is published. The database includes both text and graphics from Volume 59, Number 1 (January 2, 1994) forward. It is available on a Wide Area Information Server (WAIS) through the Internet and via asynchronous dial-in. The annual subscription fee for a single workstation is $375. Six-month subscriptions are available for $200 and one month of access can be purchased for $35. Discounts are available for multiple-workstation subscriptions. To subscribe, Internet users should telnet to swais.access.gpo.gov and login as newuser (all lower case); no password is required. Dial-in users should use communications software and modem to call (202) 512–1661 and login as swais (all lower case); no password is required; at the second login prompt, login as newuser (all lower case); no password is required. Follow the instructions on the screen to register for a subscription for the **Federal Register** Online via *GPO Access.* For assistance, contact the *GPO Access* User Support Team by sending Internet e-mail to help@eids05.eids.gpo.gov, or a fax to (202) 512–1262, or by calling (202) 512–1530 between 7 a.m. and 5 p.m. Eastern time, Monday through Friday, except Federal holidays.

The annual subscription price for the **Federal Register** paper edition is $494, or $544 for a combined **Federal Register**, Federal Register Index and List of CFR Sections Affected (LSA) subscription; the microfiche edition of the **Federal Register** including the Federal Register Index and LSA is $433. Six month subscriptions are available for one-half the annual rate. The charge for individual copies in paper form is $8.00 for each issue, or $8.00 for each group of pages as actually bound; or $1.50 for each issue in microfiche form. All prices include regular domestic postage and handling. International customers please add 25% for foreign handling. Remit check or money order, made payable to the Superintendent of Documents, or charge to your GPO Deposit Account, VISA or MasterCard. Mail to: New Orders, Superintendent of Documents, P.O. Box 371954, Pittsburgh, PA 15250–7954.

There are no restrictions on the republication of material appearing in the **Federal Register.**

How To Cite This Publication: Use the volume number and the page number. Example: 60 FR 12345.

SUBSCRIPTIONS AND COPIES

PUBLIC

Subscriptions:

Paper or fiche	**202–512–1800**
Assistance with public subscriptions	**512–1806**

Online:

Telnet swais.access.gpo.gov, login as newuser <enter>, no password <enter>; or use a modem to call (202) 512–1661, login as swais, no password <enter>, at the second login as newuser <enter>, no password <enter>.

Assistance with online subscriptions	**202–512–1530**

Single copies/back copies:

Paper or fiche	**512–1800**
Assistance with public single copies	**512–1803**

FEDERAL AGENCIES

Subscriptions:

Paper or fiche	**523–5243**
Assistance with Federal agency subscriptions	**523–5243**

For other telephone numbers, see the Reader Aids section at the end of this issue.

THE FEDERAL REGISTER

WHAT IT IS AND HOW TO USE IT

FOR: Any person who uses the Federal Register and Code of Federal Regulations.

WHO: The Office of the Federal Register.

WHAT: Free public briefings (approximately 3 hours) to present:

1. The regulatory process, with a focus on the Federal Register system and the public's role in the development of regulations.
2. The relationship between the Federal Register and Code of Federal Regulations.
3. The important elements of typical Federal Register documents.
4. An introduction to the finding aids of the FR/CFR system.

WHY: To provide the public with access to information necessary to research Federal agency regulations which directly affect them. There will be no discussion of specific agency regulations.

WASHINGTON, DC

(THREE BRIEFINGS)

WHEN: March 23 at 9:00 am and 1:30 pm
April 20 at 9:00 am

WHERE: Office of the Federal Register Conference Room, 800 North Capitol Street NW., Washington, DC (3 blocks north of Union Station Metro)

RESERVATIONS: 202–523–4538

DALLAS, TX

WHEN: March 30 at 9:00 am

WHERE: Conference Room 7A23
Earle Cabell Federal Building and Courthouse
1100 Commerce Street
Dallas, TX 75242

RESERVATIONS: 1–800–366–2998

Printed on recycled paper containing 100% post consumer waste

Contents

Federal Register

Vol. 60, No. 49

Tuesday, March 14, 1995

Administration on Aging
See Aging Administration

Administrative Conference of the United States
NOTICES
Recommendations:
Freedom of Information Act Exemption 8 application and modification, and procedures for debarment and suspension from federal programs, 13692–13697

Aging Administration
NOTICES
Committees; establishment, renewal, termination, etc.:
White House Conference on Aging—
Business Advisory Committee, 13727
Disability Advisory Committee, 13727

Agricultural Marketing Service
RULES
Eggs and egg products:
Voluntary shell egg grading
Correction, 13780
Mushroom promotion, research, and consumer information order, 13613–13615

Agriculture Department
See Agricultural Marketing Service
See Consolidated Farm Service Agency
See Forest Service
See Rural Business and Cooperative Development Service
See Rural Housing and Community Development Service
See Rural Utilities Service

Antitrust Division
NOTICES
National cooperative research notifications:
Laser Power Corp., 13733
PowerOpen Association, Inc., 13733
Southwest Research Institute, 13733–13734
U.S. Steel Group et al., 13734

Army Department
See Engineers Corps
NOTICES
Meetings:
U.S. Army Command and General Staff College Advisory Committee, 13702–13703

Centers for Disease Control and Prevention
NOTICES
Meetings:
Disease, Disability, and Injury Prevention and Control special emphasis panel, 13728

Children and Families Administration
NOTICES
Grants and cooperative agreements; availability, etc.:
Safe and drug free schools program; correction, 13727–13728

Coast Guard
RULES
Drawbridge operations:
Maryland, 13629
PROPOSED RULES
Drawbridge operations:
Oregon and Washington, 13653–13654

Commerce Department
See Economic Development Administration
See International Trade Administration
See National Oceanic and Atmospheric Administration

Commission on Immigration Reform
NOTICES
Meetings, 13702

Consolidated Farm Service Agency
PROPOSED RULES
Program regulations:
Environmental program, 13650–13651

Corporation for National and Community Service
NOTICES
Agency information collection activities under OMB review, 13702

Defense Department
See Army Department
See Engineers Corps
NOTICES
U.S. Court of Appeals for the Armed Forces; practice and procedure rule changes; correction, 13780

Drug Enforcement Administration
NOTICES
Applications, hearings, determinations, etc.:
Isotec, Inc., 13734
Knight Seed Co., Inc., 13735
Mallinckrodt Chemical, Inc., 13735
MD Pharmaceutical, Inc., 13735
Roche Diagnostic Systems, Inc., 13736

Economic Development Administration
NOTICES
Grants and cooperative agreements; availability, etc.:
Economic development assistance programs, 13866–13883

Education Department
NOTICES
Grants and cooperative agreements; availability, etc.:
Safe and drug free schools program; correction, 13727–13728
Meetings:
Indian Education National Advisory Council, 13713
National Educational Research Policy and Priorities Board, 13713–13714

Energy Department
See Energy Information Administration
See Federal Energy Regulatory Commission

NOTICES
Meetings:
Environmental Management Site Specific Advisory Board—
Monticello Site, 13714
Pantex Plant, 13714–13715
Natural gas exportation and importation:
Petro-Canada Hydrocarbons Inc., 13721
Phillips Alaska Natural Gas Corp. et al., 13721
Spent nuclear fuel or high-level radioactive waste; safe transportation and emergency response training; technical assistance and funding, 13715

Energy Information Administration
NOTICES
Forms; availability, etc.:
Solar thermal collector manufacturers and photovoltaic module/cell manufacturers annual surveys, 13715–13716

Engineers Corps
PROPOSED RULES
Wetland delineator certification program, 13654–13662
NOTICES
Regulatory guidance letters, 13703–13713

Environmental Protection Agency
RULES
Air quality implementation plans; approval and promulgation; various States; air quality planning purposes; designation of areas:
Illinois, 13631–13634
Air quality implementation plans; approval and promulgation; various States:
Illinois, 13634–13636
PROPOSED RULES
Air pollutants, hazardous; national emission standards:
Printing and publishing industry operations, 13664–13683
Air programs:
Ambient air quality standards, national—
Sulfur oxides (sulfur dioxide), 13663–13664
Clean Air Act:
State operating permits programs—
Nevada, 13683–13686
NOTICES
Meetings:
Endocrine disruptors workshop, 13721
Environmental Policy and Technology National Advisory Council, 13722
Municipal solid waste landfill permit programs; adequacy determinations:
New York, 13722–13724

Executive Office of the President
See Presidential Documents
See Trade Representative, Office of United States

Federal Aviation Administration
RULES
Air traffic operating and flight rules:
Noise compliance (Stage 3); airplance sharing agreements; policy statement, 13627–13628
Airworthiness directives:
Airbus, 13621–13623
Boeing, 13618–13620, 13623–13624
British Aerospace, 13620–13621
Univair Aircraft Corp., 13624–13626
Class E airspace, 13626–13627
PROPOSED RULES
Air carrier certification and operations:
Flight data recorders; increased parameters, 13862–13864
NOTICES
Passenger facility charges; applications, etc.:
Austin, TX, et al., 13747–13749
Rock Springs-Sweetwater County Airport Board, WY, et al., 13749–13750

Federal Communications Commission
RULES
Common carrier services:
Tariffs—
Interstate interexchange marketplace competition, 13637–13639
Practice and procedure:
Pioneer's preference rule; regulatory review, 13636–13637
PROPOSED RULES
Frequency allocations and radio treaty matters:
Mobile-satellite service; allocation of spectrum at 2 GHz range for use in operating satellites that provide personal communications services, 13687–13688
NOTICES
Agency information collection activities under OMB review, 13724–13725
Rulemaking proceedings; petitions filed, granted, denied, etc., 13725

Federal Deposit Insurance Corporation
NOTICES
Meetings; Sunshine Act, 13778

Federal Energy Regulatory Commission
PROPOSED RULES
Natural gas companies (Natural Gas Act):
Rate schedule and tariff changes; filing and reporting requirements; and uniform system of accounts forms, statements, and reporting requirements; revisions, 13651–13652
NOTICES
Electric rate and corporate regulation filings:
Kentucky Utilities Co. et al., 13716–13718
Environmental statements; availability, etc.:
Southern Natural Gas Co., 13718
Applications, hearings, determinations, etc.:
Algonquin Gas Transmission Co., 13718–13719
ANR Pipeline Co., 13719
Consolidated Edison Co. of New York, Inc., 13719
KN Interstate Gas Transmission Co., 13719
Northern Natural Gas Co., 13720
Southern Natural Gas Co., 13720–13721
South Georgia Natural Gas Co., 13720
Tennessee Gas Pipeline Co., 13721
Williston Basin Interstate Pipeline Co., 13721

Federal Highway Administration
NOTICES
Environmental statements; notice of intent:
Albemarle County, VA, 13750

Federal Railroad Administration
NOTICES
Traffic control systems; discontinuance and removal:
Consolidated Rail Corp. et al., 13750–13752

Federal Reserve System
NOTICES
Applications, hearings, determinations, etc.:
Dukes, John Ashley, 13725
Farmington Bancorp; correction, 13725
GreatBanc, Inc., et al., 13725–13726
HSBC Holdings plc et al., 13726–13727
Sequatchie Valley Bancshares, Inc., 13727

Food and Drug Administration
NOTICES
Meetings:
Drug and biological products; comparision of safety, effectiveness, and cost-effectiveness, 13728

Forest Service
NOTICES
Environmental statements; availability, etc.:
Native inland fish habitat management, 13697–13698

Health and Human Services Department
See Aging Administration
See Centers for Disease Control and Prevention
See Children and Families Administration
See Food and Drug Administration
See Health Resources and Services Administration
See National Institutes of Health

Health Resources and Services Administration
NOTICES
Grants and cooperative agreements; availability, etc.:
Rural regional trauma and emergency medical services system demonstration project in Florida, 13728

Housing and Urban Development Department
RULES
Mortgage and loan insurance programs:
Lending institutions and mortgagees approval; investing lenders in Title I property improvement and manufactured home insurance programs, 13834–13837
Title I property improvement and manufactured home loans; insurance charges, electronic payment, 13854–13855
PROPOSED RULES
Fair housing:
Housing for older persons—
Significant facilities and services; definition, 13840–13848
NOTICES
Grant and cooperative agreement awards:
Public and Indian housing—
Public housing family investment centers after-school program; demonstration, 13850–13852

Immigration and Naturalization Service
NOTICES
Committees; establishment, renewal, termination, etc.:
Citizens' Advisory Panel; meeting, 13736–13737

Interior Department
See Land Management Bureau
See Minerals Management Service
See National Park Service
See Surface Mining Reclamation and Enforcement Office

International Trade Administration
NOTICES
Antidumping:
Uranium from—
Kazakhstan, 13699
Countervailing duties:
Softwood lumber from—
Canada, 13698–13699
Applications, hearings, determinations, etc.:
Energy Department et al., 13699–13700
Medical College of Pennsylvania et al., 13701
Mines Bureau et al., 13700
University of—
California, 13700–13701
Colorado at Boulder et al., 13700
Massachusetts, Dartmouth, 13701–13702

Interstate Commerce Commission
NOTICES
Meetings; Sunshine Act, 13778

Justice Department
See Antitrust Division
See Drug Enforcement Administration
See Immigration and Naturalization Service
NOTICES
Pollution control; consent judgments:
Rocky Ford Storage, Inc., et al., 13733

Labor Department
See Occupational Safety and Health Administration

Land Management Bureau
NOTICES
Environmental statements; availability, etc.:
Grand Junction District, CO; replacement raw water pipeline in western Colorado, 13730

Minerals Management Service
PROPOSED RULES
Spill-response plan requirements for oil handling offshore facilities seaward of coast line, including associated pipelines, 13652–13653
NOTICES
Outer Continental Shelf; oil, gas, and sulphur operations:
Arco's production safety system training program (SIM STATION for interactive video training and simulation), 13731

National Aeronautics and Space Administration
NOTICES
Patent licenses; non-exclusive, exclusive, or partially exclusive:
KVH Industries, Inc., 13737

National Highway Traffic Safety Administration
RULES
Motor vehicle safety standards:
Metric conversion; weights and measures system, 13639–13649
PROPOSED RULES
Motor vehicle safety standards:
Glazing materials—
Rigid plastic, 13688–13691
NOTICES
Insurance cost information booklet; availability, 13762–13768

Motor vehicle defect proceedings; petitions, etc.:
General Motors Corp.; certain GM pickup trucks, 13752–13758
Motor vehicle safety standards:
Nonconforming vehicles—
Importation eligibility; determinations, 13759–13761

National Institutes of Health
NOTICES
Meetings:
National Institute of Allergy and Infectious Diseases, 13729
National Institute of General Medical Sciences, 13728–13729
Research Grants Division special emphasis, 13729–13730

National Oceanic and Atmospheric Administration
RULES
Fishery conservation and management:
Bering Sea and Aleutian Islands groundfish; and limited access management of Federal fisheries in and off of Alaska
Correction, 13780

National Park Service
RULES
Special regulations:
Grand Teton National Park, WY; mountain climbing and winter backcountry trips, 13629–13630
PROPOSED RULES
Special regulations:
Oregon Caves National Monument, OR; age restriction elimination, 13662–13663
NOTICES
Meetings:
Maine Acadian Culture Preservation Commission, 13731
Mining plans of operation; availability, etc.:
Wrangell-St. Elias National Park and Preserve, AK, 13732–13733
National Register of Historic Places:
Pending nominations, 13731–13732

National Transportation Safety Board
NOTICES
Meetings; Sunshine Act, 13778

Neighborhood Reinvestment Corporation
NOTICES
Meetings; Sunshine Act, 13778

Nuclear Regulatory Commission
RULES
NRC licensees; reporting requirements reduction, 13615–13618
NOTICES
Meetings:
Organization of Agreement State managers, 13737
Meetings; Sunshine Act, 13778–13779
Applications, hearings, determinations, etc.:
Connecticut Yankee Atomic Power Co., 13737–13738
Duke Power Co. et al., 13738–13739
Roudebush, Forrest L., 13739–13741

Nuclear Waste Technical Review Board
NOTICES
Meetings, 13741–13742

Occupational Safety and Health Administration
PROPOSED RULES
Safety and health standards, etc.:
Powered industrial truck operator training, 13782–13831

Office of United States Trade Representative
See Trade Representative, Office of United States

Personnel Management Office
RULES
Employment:
Suitability, personnel security and related programs, investigations, and suitability disqualification actions; OPM Review Panel abolished, 13613

Presidential Documents
PROCLAMATIONS
Special observances:
Park Week, National (Proc. 6775), 13887–13888

Public Health Service
See Centers for Disease Control and Prevention
See Food and Drug Administration
See Health Resources and Services Administration
See National Institutes of Health

Rural Business and Cooperative Development Service
PROPOSED RULES
Program regulations:
Environmental program, 13650–13651

Rural Housing and Community Development Service
PROPOSED RULES
Program regulations:
Environmental program, 13650–13651

Rural Utilities Service
PROPOSED RULES
Program regulations:
Environmental program, 13650–13651

Securities and Exchange Commission
NOTICES
Self-regulatory organizations; proposed rule changes:
American Stock Exchange, Inc., 13742–13743
Depository Trust Co., 13743–13744
New York Stock Exchange, Inc., et al., 13744–13745

Small Business Administration
NOTICES
Agency information collection activities under OMB review, 13745
Disaster loan areas:
California, 13745–13746
Applications, hearings, determinations, etc.:
Pioneer Ventures L.P. II, 13746

Surface Mining Reclamation and Enforcement Office
PROPOSED RULES
Coal Refuse Disposal Negotiated Rulemaking Advisory Committee; establishment, 13858–13860

Thrift Supervision Office
NOTICES
Privacy Act:
Systems of records, 13770–13777

Trade Representative, Office of United States
NOTICES
North American Free Trade Agreement (NAFTA); accession

Chile; negotiation, 13746–13747

Transportation Department
See Coast Guard
See Federal Aviation Administration
See Federal Highway Administration
See Federal Railroad Administration
See National Highway Traffic Safety Administration
RULES
Organization, functions, and authority delegations: Federal Railroad Administrator, 13639

Treasury Department
See Thrift Supervision Office
NOTICES
Agency information collection activities under OMB review, 13769

Separate Parts In This Issue

Part II
Department of Labor, Occupational Safety and Health Administration, 13782–13831

Part III
Department of Housing and Urban Development, 13834–13837

Part IV
Department of Housing and Urban Development, 13840–13848

Part V
Department of Housing and Urban Development, 13850–13852

Part VI
Department of Housing and Urban Development, 13854–13855

Part VII
Department of the Interior, Surface Mining Reclamation and Enforcement Office, 13858–13860

Part VIII
Department of Transportation, Federal Aviation Administration, 13862–13864

Part IX
Department of Commerce, Economic Development Administration, 13866–13883

Part X
The President, 13887–13888

Reader Aids

Additional information, including a list of public laws, telephone numbers, and finding aids, appears in the Reader Aids section at the end of this issue.

Electronic Bulletin Board

Free **Electronic Bulletin Board** service for Public Law numbers, **Federal Register** finding aids, and a list of documents on public inspection is available on 202–275–1538 or 275–0920.

CFR PARTS AFFECTED IN THIS ISSUE

A cumulative list of the parts affected this month can be found in the Reader Aids section at the end of this issue.

3 CFR
6775.....13887

5 CFR
731.....13613

7 CFR
56.....13780
1209.....13613

Proposed Rules:
1940.....13650

10 CFR
50.....13615
55.....13615
73.....13615

14 CFR
39 (5 documents) 13618, 13620, 13621, 13623, 13624
71.....13626
91.....13627

Proposed Rules:
121.....13862
125.....13862
135.....13862

18 CFR

Proposed Rules:
154.....13651
158.....13651
201.....13651
250.....13651
284.....13651

24 CFR
25.....13834
201 (2 documents) 13834, 13854
202.....13834

Proposed Rules:
100.....13840

29 CFR

Proposed Rules:
1910.....13782
1915.....13782
1917.....13782
1918.....13782

30 CFR

Proposed Rules:
254.....13652
VII 13858

33 CFR
117.....13629

Proposed Rules:
117.....13653
320.....13653
325.....13653
333.....13653

36 CFR
7.....13629

Proposed Rules:
7.....13662

40 CFR
52 (2 documents) 13631, 13634
81.....13634

Proposed Rules:
50.....13663
53.....13663
63.....13664
70.....13683

47 CFR
1.....13636
5.....13636
61.....13637

Proposed Rules:
2.....13687

49 CFR
1.....13639
571.....13639

Proposed Rules:
571.....13688

50 CFR
611.....13780
675.....13780
676.....13780

Rules and Regulations

Federal Register
Vol. 60, No. 49
Tuesday, March 14, 1995

This section of the FEDERAL REGISTER contains regulatory documents having general applicability and legal effect, most of which are keyed to and codified in the Code of Federal Regulations, which is published under 50 titles pursuant to 44 U.S.C. 1510.

The Code of Federal Regulations is sold by the Superintendent of Documents. Prices of new books are listed in the first FEDERAL REGISTER issue of each week.

OFFICE OF PERSONNEL MANAGEMENT

5 CFR Part 731

RIN 3206–AG36

Suitability, Personnel Security and Related Programs, Investigations, and Suitability Disqualification Actions

AGENCY: Office of Personnel Management.

ACTION: Final rule.

SUMMARY: The Office of Personnel Management (OPM) is adopting as final an interim rule that revoked the section of its interim regulations that established the OPM Review Panel (5 CFR Part 731, subpart E), and issued a new subpart E that spells out procedures for appealing adverse suitability determinations to the Merit Systems Protection Board.

EFFECTIVE DATE: October 17, 1994.

FOR FURTHER INFORMATION CONTACT: John J. Lafferty, Deputy Associate Director for Investigations, (202) 376–3800.

SUPPLEMENTARY INFORMATION: On September 16, 1994, OPM published an interim rule announcing its decision to revoke the section of its interim regulations establishing the OPM Review Panel, thereby abolishing the Review Panel, and promulgating new regulations that provide individuals the opportunity to appeal adverse suitability determinations to the Merit Systems Protection Board (59 FR 47527, September 16, 1994). OPM received no comments in response to this notice.

EO 12866, Regulatory Review

This rule has been reviewed by the Office of Management and Budget in accordance with EO 12866.

Regulatory Flexibility Act

I certify that these regulations will not have a significant economic impact on a substantial number of small entities because they relate to internal personnel matters within the Federal Government.

List of Subjects in 5 CFR Part 731

Administrative practice and procedure, Government employees.

Accordingly, under authority of 5 U.S.C. 3301, the interim rule amending 5 CFR Part 731 published on September 16, 1994 (59 FR 47527), is adopted as final without any changes.

Office of Personnel Management.

James B. King,

Director.

[FR Doc. 95–6217 Filed 3–13–95; 8:45 am]

BILLING CODE 6325–01–M

DEPARTMENT OF AGRICULTURE

Agricultural Marketing Service

7 CFR Part 1209

[FV–92–701FR]

RIN 0581–AA49

Mushroom Promotion, Research, and Consumer Information Order

AGENCY: Agricultural Marketing Service, USDA.

ACTION: Final rule.

SUMMARY: The Department of Agriculture is adopting with change as a final rule an interim final rule which specified the general rules and regulations under the Mushroom Promotion, Research, and Consumer Information Order (Order). The interim final rule implemented provisions of the Order concerning the nomination and appointment of members to the Mushroom Council; the preparation and submission of financial statements; the payment of assessments, including the application of late payment and interest charges; the procedures for claiming an exemption from assessments; and the filing of reports.

EFFECTIVE DATE: March 14, 1995.

FOR FURTHER INFORMATION CONTACT: Richard Schultz, Research and Promotion Branch, Fruit and Vegetable Division, AMS, USDA, P.O. Box 96456, Room 2535–S, Washington, D.C. 20090–6456, telephone: (202) 720–5976.

SUPPLEMENTARY INFORMATION: This final rule is issued under the Mushroom Promotion, Research, and Consumer Information Order [7 CFR Part 1209], hereinafter referred to as the Order. The Order is authorized by the Mushroom Promotion, Research, and Consumer Information Act of 1990 [7 U.S.C. 6101–6112], hereinafter referred to as the Act.

The Department of Agriculture (Department) is issuing this rule in conformance with Executive Order 12866.

This rule has been reviewed under Executive Order 12778, Civil Justice Reform. It is not intended to have retroactive effect. Section 1930 of the Act provides that nothing in the Act may be construed to preempt or supersede any other program relating to mushroom promotion, research, consumer information, and industry information organized and operated under the United States or any State.

The Act provides that administrative proceedings must be exhausted before parties may file suit in court. Under § 1927 of the Act, a person subject to the Order may file with the Secretary of Agriculture (Secretary) a petition stating that the Order, any provision of the Order, or any obligation imposed in connection with the Order is not in accordance with law and requesting a modification of the Order or an exemption from the Order. The petitioner is afforded the opportunity for a hearing on the petition. After such hearing, the Secretary will make a ruling on the petition, which will be final if in accordance with the law. The Act provides that the district courts, of the United States in any district in which a person who is a petitioner resides or carries on business, are vested with jurisdiction to review the ruling on such person's petition, if a complaint for that purpose is filed within 20 days after the date of the entry of such ruling of the Secretary.

Regulatory Flexibility Act

Pursuant to requirements set forth in the Regulatory Flexibility Act [5 U.S.C. 601 et seq.] (RFA), the Administrator of the Agricultural Marketing Service (AMS) has considered the economic impact of this action on small entities.

The purpose of the RFA is to fit regulatory actions to the scale of business subject to such actions in order that small businesses will not be unduly or disproportionately burdened.

The most recent Department estimate of mushroom growers in the United States indicates that there are 355

growers. There are approximately 125 growers who fall under the definition of producer as defined in the Act and are subject to the Order. In addition, there are approximately 100 handlers, including producers who are also handlers, and no more than 5 importers who are subject to the Order.

Small agricultural producers have been defined by the Small Business Administration [13 CFR 121.601] as those having annual receipts of less than $500,000, and small agricultural service firms, which include mushroom handlers and importers, have been defined as those having annual receipts of less than $5 million.

While a majority of the handlers and importers who are subject to the Order are classified as small entities, a majority of the producers who are subject to the Order are not so classified.

This action provides for the continuance of provisions implemented in an interim final rule. Generally, producers, first handlers, and importers will be most affected by the provisions on nominating members to the Mushroom Council (Council); paying assessments, including the application of late payment and interest charges; claiming an exemption from assessments; and filing reports.

The nomination procedures specified in this action relate to the conduct of regional caucuses and mail balloting. Although there will be economic costs to persons participating in the nomination process relative to opportunity costs, travel costs, and postage costs, these costs will not be significant relative to the benefits to be gained. These procedures provide an opportunity for persons subject to the Order to nominate individuals and to be nominated as individuals to serve on the Council in an orderly and timely manner.

The procedures for payment of assessments specified in this action relate to the collection and remittance of assessments and the application of late payment and interest charges. Although there will be economic costs to persons subject to the Order relative to opportunity costs, assessment collection costs, and assessment remittance costs, these costs will not be significant relative to the benefits to be gained. These procedures provide such persons with an equitable and practicable framework to collect and remit assessments in an orderly and timely manner.

The exemption procedures specified in this action allow persons not subject to the Order to obtain an exemption from paying assessments or, in the case of importers, a reimbursement for assessments collected. Although there will be economic costs to persons applying for such exemption or reimbursement relative to opportunity costs and postage costs, these costs will not be significant relative to the benefits to be gained. These procedures provide such persons with a practicable means of obtaining exemptions or reimbursements in an orderly and timely manner.

The filing of reports by persons subject to the Order is required by the Act. The economic costs to persons filing these reports has been reduced to a minimum and, consequently, these costs will not be significant relative to the potential benefits to be gained. These filings are necessary for the effective and efficient administration of the program.

Accordingly, the Administrator of the AMS has determined that this action will not have a significant economic impact on a substantial number of small entities.

Paperwork Reduction Act

In accordance with the Paperwork Reduction Act of 1980 (44 U.S.C. chapter 35), the information collection requirements contained in this action regarding a nominee background statement form, a first handler's report, an exemption application, and an importer reimbursement application have been approved by the OMB. The first handler's report, the exemption application, and the importer reimbursement application are assigned OMB control number 0581–0093. The nominee background statement form is assigned OMB control number 0505–0001.

Background

On January 8, 1993, the Order became effective. The Order authorizes the development of a nationally coordinated program of promotion, research, consumer information, and industry information designed to strengthen the mushroom industry's position in the fresh market; maintain and expand existing markets and uses for fresh mushrooms; and develop new markets and uses for fresh mushrooms. The Order is administered by the Council whose members were appointed by the Secretary in June 1993.

An interim final rule was published in the February 11, 1993, issue of the **Federal Register**. The rule provided rules and regulations that were needed to implement provisions of the Order concerning the nomination and appointment of members to the Council; the preparation and submission of financial statements; the payment of assessments, including the application of late payment and interest charges; the procedures for claiming an exemption from assessments; and the filing of reports.

The interim final rule provided that interested persons could file written comments through May 12, 1993. No written comments were received.

One change is made to the rule by the Department for the purpose of conforming to industry practice.

This change to § 1209.260 of the rule is made to conform with the industry's practice of using a producer's tax identification number rather than farm identification number for reporting purposes. Therefore, a first handler will be required to provide the tax identification number, rather than the farm identification number, of each producer with whom the first handler has dealt with during the reporting period.

It is found that the rules and regulations, as set forth in the February 11 interim final rule and adopted with change by this final rule, will tend to effectuate the declared policy of the Act.

Pursuant to the provisions of 5 U.S.C. 553, it is found and determined that good cause exists for not postponing the effective date of this action until 30 days after publication in the **Federal Register** because: (1) This action continues in effect rules and regulations which were previously implemented on an interim basis, except for one change to conform to industry practice; (2) producers, first handlers, and importers are already aware of this action and will not need any additional time to comply with it; and (3) no useful purpose will be served by a delay of the effective date.

List of Subjects in 7 CFR Part 1209

Administrative practice and procedure, Advertising, Agricultural research, Marketing agreements, Mushrooms, Reporting and recordkeeping requirements.

Accordingly, the interim final rule amending 7 CFR Part 1209 which was published at 58 FR 8194 on February 11, 1993, is adopted as a final rule with the following change:

PART 1209—MUSHROOM PROMOTION, RESEARCH, AND CONSUMER INFORMATION ORDER

1. The authority citation for Part 1209 continues to read as follows:

Authority: 7 U.S.C. 6101–6112.

§ 1209.260 [Amended]

2. Section 1209.260 is amended by removing the word ''farm'' and adding in its place ''tax''.

Dated: March 8, 1995.

Patricia Jensen,

Acting Assistant Secretary, Marketing and Regulatory Programs.

[FR Doc. 95–6227 Filed 3–13–95; 8:45 am]

BILLING CODE 3410–02–P

NUCLEAR REGULATORY COMMISSION

10 CFR Parts 50, 55, and 73

RIN 3150–AF18

Reduction of Reporting Requirements Imposed on NRC Licensees

AGENCY: Nuclear Regulatory Commission.

ACTION: Final rule.

SUMMARY: The Nuclear Regulatory Commission (NRC) is amending its regulations to reduce reporting requirements currently imposed on water-cooled nuclear power reactor, research and test reactor, and nuclear material licensees. This rule reduces the regulatory burden on NRC licensees; and partially implements a recent NRC initiative to revise or eliminate duplicative or unnecessary reporting requirements. The amendments will: Eliminate the current requirement for licensees to submit summary reports of containment leakage rate tests to the NRC (10 CFR Part 50—Appendix J), but preserve the requirements in §§ 50.72 and 50.73 under which licensees currently report any instances of leakage exceeding authorized limits in the technical specifications of the license; revise 10 CFR 55.25 to refer licensees to a similar reporting requirement in 10 CFR 50.74(c) and require notification of operator incapacity only in case of permanent disability or illness; and eliminate the requirement for quarterly submittal of safeguards event logs presently contained in 10 CFR 73.71(c)(2) and Appendix G to Part 73.

EFFECTIVE DATE: April 13, 1995.

FOR FURTHER INFORMATION CONTACT: Naiem S. Tanious, Office of Nuclear Regulatory Research, U.S. Nuclear Regulatory Commission, Washington, DC 20555. Telephone (301) 415–6103.

SUPPLEMENTARY INFORMATION:

Background

On January 7, 1994, the Executive Director for Operations (EDO) sent to the Commission SECY–94–003, ''Plan for Implementing Regulatory Review Group Recommendations.'' The Commission approved these recommendations for reducing regulatory burden on its licensees. This final rule is one of several rulemakings and other regulatory actions currently being developed by the NRC staff to implement the Regulatory Review Group recommendations to eliminate duplicative or unnecessary reporting requirements. The NRC believes that this action will reduce the regulatory burden on NRC licensees without causing adverse effects on the protection of public health and safety.

On November 2, 1994 (59 FR 54843), the NRC published the notice of proposed rulemaking that reduces reporting requirements on licensees under Parts 50, 55, and 73. Specifically, the proposed amendments were intended to: (1) Eliminate the current requirement for licensees to submit summary reports of containment leakage rate tests to the NRC (10 CFR part 50—appendix J), but preserve the requirements in §§ 50.72 and 50.73 under which licensees currently report any instances of leakage exceeding authorized limits in the technical specifications of the license; (2) revise 10 CFR 55.25 to refer licensees to a similar reporting requirement in 10 CFR 50.74(c) and require notification of operator incapacity only in case of permanent disability or illness; and (3) eliminate the requirement for quarterly submittal of safeguards event logs presently contained in 10 CFR 73.71(c)(2) and Appendix G to Part 73. The public comment period expired December 19, 1994.

Analysis of Public Comments on the Proposed Rule

The NRC received seven comments: one from Nuclear Energy Institute (NEI), an organization that represents the nuclear power industry, five from the nuclear power industry, and one from Ohio Citizens for Responsible Energy, Inc. (OCRE). The comments from NEI and the nuclear power industry are supportive of the proposed rule to reduce the reporting requirements. OCRE opposes the proposed rule. However, all commenters believe that elimination of these reports will not adversely impact public health and safety. The following section addresses the public comments received and provides NRC's response to them.

Of the six comments received which favor the proposed rule, several of those endorsing the rule pointed out that the proposed changes eliminate unnecessary or redundant requirements and conserve both NRC and licensee resources. Two of the commenters felt that the NRC should assess additional reporting requirements to determine whether they can be eliminated or reduced in frequency. As discussed in the background section of this rulemaking, the NRC has underway several regulatory activities to implement the Regulatory Review Group's recommendations to eliminate duplicative or unnecessary reporting requirements. This rulemaking is limited to the requirements set out in the proposed rulemaking.

Licensees do not Need to Assemble the Summary Report

One commenter from the nuclear power industry states that the requirement to generate but not submit a summary report for the containment leakage tests provides no additional benefit and is an unnecessary burden since the summary report contains data readily available from other sources. The commenter suggests that the requirement to generate the summary report be eliminated.

The NRC disagrees. The NRC believes that the results of containment leakage tests, the licensee analysis verifying the acceptability of the results, as well as any necessary interpretations of the results, is necessary information which might not be documented absent this documentation requirement. Furthermore, the assembly of a summary report will provide access by NRC inspectors and auditors to this information in a more timely fashion.

Public Participation in the NRC Regulatory Process Will Diminish

OCRE opposes the proposed rule because it believes that adoption of the rule will diminish the public's access to information. OCRE states that the public's health and safety is not the only factor to consider when NRC proposes to eliminate some licensee reports. Access to these reports, OCRE states, is vital for effective public participation in the regulatory process.

To that end, OCRE has filed a petition for rulemaking with the NRC (59 FR 30308, June 13, 1994). The purpose of the petition is to establish public right-to-know provisions which would ensure public access to licensee-held information.

In each case where the NRC considers eliminating a reporting requirement, the NRC first considers the public health and safety impact of the proposed elimination. If there is no direct impact on public health and safety, the NRC also considers the reduced administrative burden on the licensee and the extent to which the proposed elimination will deprive the public of important health and safety information. OCRE's comments have raised the generic issue of the incremental and cumulative effect of this and similar

rulemakings in depriving the public of access to licensee information that was previously available from the NRC. In that regard, OCRE has directly presented this issue to the Commission through its petition for rulemaking referenced above and the NRC finds that this generic issue is better addressed in the context of that petition, rather than in individual rulemakings such as this one. The NRC also finds that the effect of this rulemaking will be to reduce the administrative burden on licensees and that the loss of the information in this particular case will not adversely affect the public interest in access to information regarding adequate protection of the public health and safety.

Having considered all comments received and other input, the NRC has determined that the following final rule should be promulgated.

Written Reports

This final rule would not require additional written reports. On the contrary, under this final rule, reporting will be reduced for all licensees under 10 CFR Parts 50, 55, and 73.

Criminal Penalties

For purposes of Section 223 of the Atomic Energy Act of 1954, as amended, relating to willful violations of requirements notice is hereby given that these amendments are being adopted and promulgated pursuant to Sections 161b, 161i, or 161o of the Act.

Environmental Impact: Categorical Exclusion

The NRC has determined that this final rule is the type of action described in the categorical exclusion 10 CFR 51.22(c)(3)(iii). Therefore, neither an environmental impact statement nor an environmental assessment has been prepared for this regulation.

Paperwork Reduction Act Statement

This final rule amends information collection requirements that are subject to the Paperwork Reduction Act of 1980 (44 U.S.C. 3501 *et seq.*). These requirements were approved by the Office of Management and Budget, approval numbers 3150–0011, –0018, and –0002.

Because the rule will relax existing information collection requirements, the annual public burden for this collection of information is expected to be reduced by approximately 20 hours per licensee. This reduction includes the time required for reviewing instructions, searching existing data sources, gathering and maintaining the data needed and completing and reviewing the collection of information. Send comments regarding the estimated burden reduction or any other aspect of this collection of information, including suggestions for reducing this burden, to the Information and Records Management Branch (T–6 F33), U.S. Nuclear Regulatory Commission, Washington, DC 20555–0001; and to the Desk Officer, Office of Information and Regulatory Affairs, NEOB–10202, (3150–0011, –0018, –0002), Office of Management and Budget, Washington, DC 20503.

Regulatory Analysis

The Commission has prepared a regulatory analysis on this final rule. The analysis examines the costs and benefits of the alternatives considered by the Commission. The Commission requested public comment on the draft regulatory analysis, but no comments were received. Therefore, no changes to the draft regulatory analysis have been made. The draft regulatory analysis is adopted as the final regulatory analysis without change. The analysis is available for inspection in the NRC Public Document Room, 2120 L Street NW. (Lower Level), Washington, DC.

Regulatory Flexibility Certification

In accordance with the Regulatory Flexibility Act of 1980, (5 U.S.C. 605(b)), the Commission certifies that this rule will not have a significant economic impact on a substantial number of small entities. This final rule affects the nuclear power reactors, research and test reactors, and some material licensees. The companies and organizations that own these plants do not fall within the scope of the definition of ''small entities'' set forth in the Regulatory Flexibility Act of the size standards established by the NRC (56 FR 56671; November 6, 1991).

Backfit Analysis

The NRC has determined that the backfit rule, 10 CFR 50.109, does not apply to this final rule because these amendments do not involve any provisions which would impose backfits on licensees as defined in § 50.109(a)(1). In addition, information collection and reporting requirements are not subject to the backfit rule.

List of Subjects

10 CFR Part 50

Antitrust, Classified information, Criminal penalties, Fire protection, Intergovernmental relations, Nuclear power plants and reactors, Radiation protection, Reactor siting criteria, Reporting and recordkeeping requirements.

10 CFR Part 55

Criminal penalties, Manpower training programs, Nuclear power plants and reactors, Reporting and recordkeeping requirements.

10 CFR Part 73

Criminal penalties, Hazardous materials transportation, Export, Import, Nuclear materials, Nuclear power plants and reactors, Reporting and recordkeeping requirements, Security measures.

PART 50—DOMESTIC LICENSING OF PRODUCTION AND UTILIZATION FACILITIES

1. The authority citation for 10 CFR Part 50 continues to read as follows:

Authority: Secs. 102, 103, 104, 105, 161, 182, 183, 186, 189, 68 Stat. 936, 937, 938, 948, 953, 954, 955, 956, as amended, sec. 234, 83 Stat. 1244, as amended (42 U.S.C. 2132, 2133, 2134, 2135, 2201, 2232, 2233, 2236, 2239, 2282); secs. 201, as amended, 202, 206, 88 Stat. 1242, as amended, 1244, 1246 (42 U.S.C. 5841, 5842, 5846).

Section 50.7 also issued under Pub. L. 95–601, sec. 10, 92 Stat. 2951 as amended by Pub. L. 102–486, sec. 2902, 106 Stat 3123, (42 U.S.C. 5851). Section 50.10 also issued under secs. 101, 185, 68 Stat. 936, 955, as amended (42 U.S.C. 2131, 2235); sec. 102, Pub. L. 91–190, 83 Stat. 853 (42 U.S.C. 4332). Sections 50.13, 50.54(dd), and 50.103 also issued under sec. 108, 68 Stat. 939, as amended (42 U.S.C. 2138). Sections 50.23, 50.35, 50.55, and 50.56 also issued under sec. 185, 68 Stat. 955 (42 U.S.C. 2235). Sections 50.33a, 50.55a and Appendix Q also issued under sec. 102, Pub. L. 91–190, 83 Stat. 853 (42 U.S.C. 4332). Sections 50.34 and 50.54 also issued under sec. 204, 88 Stat. 1245 (42 U.S.C. 5844). Sections 50.58, 50.91, and 50.92 also issued under Pub. L. 97–415, 96 Stat. 2073 (42 U.S.C. 2239). Section 50.78 also issued under sec. 122, 68 Stat. 939 (42 U.S.C. 2152). Sections 50.80 - 50.81 also issued under sec. 184, 68 Stat. 954, as amended (42 U.S.C. 2234). Appendix F also issued under sec. 187, 68 Stat. 955 (42 U.S.C 2237).

2. In 10 CFR 50.74, paragraph (c) is revised to read as follows:

§ 50.74 Notification of change in operator or senior operator status.

* * * * *

(c) Permanent disability or illness as described in § 55.25 of this chapter.

3. In 10 CFR Part 50 Appendix J, Section III, paragraphs A.1.(a), (b), and (d); Section IV. paragraph A., and Section V. paragraphs A. and B., are revised to read as follows:

Appendix J to Part 50—Primary Reactor Containment Leakage Testing for Water-Cooled Power Reactors

* * * * *

III. Leakage Testing Requirements

* * * * * *

A. Type A test-1. Pretest requirements. (a) Containment inspection in accordance with V. A. shall be performed as a prerequisite to the performance of Type A tests. During the period between the initiation of the containment inspection and the performance of the Type A test, no repairs or adjustments shall be made so that the containment can be tested in as close to the ''as is'' condition as practical. During the period between the completion of one Type A test and the initiation of the containment inspection for the subsequent Type A test, repairs or adjustments shall be made to components whose leakage exceeds that specified in the technical specification as soon as practical after identification. If during a Type A test, including the supplemental test specified in III.A.3.(b), potentially excessive leakage paths are identified which will interfere with satisfactory completion of the test, or which result in the Type A test not meeting the acceptance criteria III.A.4.(b) or III.A.5.(b), the Type A test shall be terminated and the leakage through such paths shall be measured using local leakage testing methods. Repairs and/or adjustments to equipment shall be made and Type A test performed. The corrective action taken and the change in leakage rate determined from the tests and overall integrated leakage determined from local leak and Type A tests shall be included in the summary report required by V.B.

(b) Closure of containment isolation valves for the Type A test shall be accomplished by normal operation and without any preliminary exercising or adjustments (e.g., no tightening of valve after closure by valve motor). Repairs of maloperating or leaking valves shall be made as necessary. Information on any valve closure malfunction or valve leakage that require corrective action before the test, shall be included in the summary report required by V.B.

* * * * *

(d) Those portions of the fluid systems that are part of the reactor coolant pressure boundary and are open directly to the containment atmosphere under post-accident conditions and become an extension of the boundary of the containment shall be opened or vented to the containment atmosphere prior to and during the test. Portions of closed systems inside containment that penetrate containment and rupture as a result of a loss of coolant accident shall be vented to the containment atmosphere. All vented systems shall be drained of water or other fluids to the extent necessary to assure exposure of the system containment isolation valves to containment air test pressure and to assure they will be subjected to the post accident differential pressure. Systems that are required to maintain the plant in a safe condition during the test shall be operable in their normal mode, and need not be vented. Systems that are normally filled with water and operating under post-accident conditions, such as the containment heat removal system, need not be vented. However, the containment isolation valves in the systems defined in III.A.1.(d) shall be tested in accordance with III.C. The measured leakage rate from these tests shall be included in the summary report required by V.B.

* * * * *

IV. Special Testing Requirements

A. Containment modification. Any major modification, replacement of a component which is part of the primary reactor containment boundary, or resealing a seal-welded door, performed after the preoperational leakage rate test shall be followed by either a Type A, Type B, or Type C test, as applicable for the area affected by the modification. The measured leakage from this test shall be included in the summary report required by V.B. The acceptance criteria of III.A.5.(b), III.B.3., or III.C.3., as appropriate, shall be met. Minor modifications, replacements, or resealing of seal-welded doors, performed directly prior to the conduct of a scheduled Type A test do not require a separate test.

* * * * *

V. Inspection and Reporting of Tests

A. Containment inspection. A general inspection of the accessible interior and exterior surfaces of the containment structures and components shall be performed prior to any Type A test to uncover any evidence of structural deterioration which may affect either the containment structural integrity or leak-tightness. If there is evidence of structural deterioration, Type A tests shall not be performed until corrective action is taken in accordance with repair procedures, non destructive examinations, and tests as specified in the applicable code specified in § 50.55a at the commencement of repair work. Such structural deterioration and corrective actions taken shall be included in the summary report required by V.B.

B. Recordkeeping of test results. 1. The preoperational and periodic tests must be documented in a readily available summary report that will be made available for inspection, upon request, at the nuclear power plant. The summary report shall include a schematic arrangement of the leakage rate measurement system, the instrumentation used, the supplemental test method, and the test program selected as applicable to the preoperational test, and all the subsequent periodic tests. The report shall contain an analysis and interpretation of the leakage rate test data for the Type A test results to the extent necessary to demonstrate the acceptability of the containment's leakage rate in meeting acceptance criteria.

2. For each periodic test, leakage test results from Type A, B, and C tests shall be included in the summary report. The summary report shall contain an analysis and interpretation of the Type A test results and a summary analysis of periodic Type B and Type C tests that were performed since the last type A test. Leakage test results from type A, B, and C tests that failed to meet the acceptance criteria of III.A.5(b), III.B.3, and III.C.3, respectively, shall be included in a separate accompanying summary report that includes an analysis and interpretation of the test data, the least squares fit analysis of the test data, the instrumentation error analysis, and the structural conditions of the containment or components, if any, which contributed to the failure in meeting the acceptance criteria. Results and analyses of the supplemental verification test employed to demonstrate the validity of the leakage rate test measurements shall also be included.

PART 55—OPERATORS' LICENSES

4. The authority citation for 10 CFR Part 55 continues to read as follows:

Authority: Secs. 107, 161, 182, 68 Stat. 939, 948, 953 , as amended, sec. 234, 83 Stat. 444, as amended (42 U.S.C. 2137, 2201, 2232, 2282); secs. 201, as amended, 202, 88 Stat. 1242, as amended, 1244 (42 U.S.C. 5841, 5842).

Sections 55.41, 55.43, 55.45, and 55.59 also issued under sec. 306, Pub. L. 97–425, 96 Stat. 2262 (42 U.S.C. 10226). Section 55.61 also issued under secs. 186, 187, 68 Stat. 955 (42 U.S.C. 2236, 2237).

5. 10 CFR 55.25 is revised to read as follows:

§ 55.25 Incapacitation because of disability or illness.

If, during the term of the license, the licensee develops a permanent physical or mental condition that causes the licensee to fail to meet the requirements of § 55.21 of this part, the facility licensee shall notify the Commission, within 30 days of learning of the diagnosis, in accordance with § 50.74(c). For conditions for which a conditional license (as described in § 55.33(b) of this part) is requested, the facility licensee shall provide medical certification on Form NRC 396 to the Commission (as described in § 55.23 of this part).

PART 73—PHYSICAL PROTECTION OF PLANTS AND MATERIALS

6. The authority citation for 10 CFR Part 73 continues to read as follows:

Authority: Secs. 53, 161, 68 Stat. 930, 948, as amended, sec. 147, 94 Stat. 780 (42 U.S.C. 2073, 2167, 2201); sec. 201, as amended, 204, 88 Stat. 1242, as amended, 1245 Sec. 1701, 106 Stat. 2951, 2952, 2953 (42 U.S.C. 5841, 5844, 2297f).

Section 73.1 also issued under secs. 135, 141, Pub. L. 97–425, 96 Stat. 2232, 2241 (42 U.S.C, 10155, 10161). Section 73.37(f) also issued under sec. 301, Pub. L. 96–295, 94 Stat. 789 (42 U.S.C. 5841 note). Section 73.57 is issued under sec. 606, Pub. L. 99–399, 100 Stat. 876 (42 U.S.C. 2169).

7. Section 73.71, paragraph (c)(2) is deleted, paragraph (c)(1) is redesignated as paragraph (c), and paragraph (d) is revised to read as follows:

§ 73.71 Reporting of safeguards events.

* * * * *

(d) Each licensee shall submit to the Commission the 30-day written reports

required under the provisions of this section that are of a quality which will permit legible reproduction and processing. If the facility is subject to § 50.73 of this chapter, the licensee shall prepare the written report on NRC Form 366. If the facility is not subject to § 50.73 of this chapter, the licensee shall not use this form but shall prepare the written report in letter format. The report must include sufficient information for NRC analysis and evaluation.

* * * * *

8. In 10 CFR Part 73, Appendix G, the title of Section II. is revised to read as follows:

Appendix G to Part 73—Reportable Safeguards Events

* * * * *

II. Events to be recorded within 24 hours of discovery in the safeguards event log.

* * * * *

Dated at Rockville, Maryland, this 2nd day of March, 1995.

For the Nuclear Regulatory Commission.

James M. Taylor,

Executive Director for Operations.

[FR Doc. 95–6210 Filed 3–13–95; 8:45 am]

BILLING CODE 7590–01–P

DEPARTMENT OF TRANSPORTATION

Federal Aviation Administration

14 CFR Part 39

[Docket No. 94–NM–123–AD; Amendment 39–9172; AD 95–06–02]

Airworthiness Directives; Boeing Model 747 Series Airplanes, Excluding Airplanes Equipped With Pratt & Whitney PW4000 and General Electric CF6–80C2 Series Engines

AGENCY: Federal Aviation Administration, DOT.

ACTION: Final rule.

SUMMARY: This amendment adopts a new airworthiness directive (AD), applicable to certain Boeing Model 747 series airplanes, that requires replacement of certain fuse pins on the upper link of the inboard and outboard struts. This AD would also require inspections to detect corrosion or cracks of certain fuse pins, and replacement, if necessary. This amendment is prompted by reports of cracked or corroded fuse pins on the upper link of the inboard and outboard struts, which could result in fracturing of the pins. The actions specified by this AD are intended to prevent failure of the strut and separation of an engine from the airplane due to fracturing of the fuse pins.

DATES: Effective April 13, 1995.

The incorporation by reference of certain publications listed in the regulations is approved by the Director of the Federal Register as of April 13, 1995.

ADDRESSES: The service information referenced in this AD may be obtained from Boeing Commercial Airplane Group, P.O. Box 3707, Seattle, Washington 98124–2207. This information may be examined at the Federal Aviation Administration (FAA), Transport Airplane Directorate, Rules Docket, 1601 Lind Avenue SW., Renton, Washington; or at the Office of the Federal Register, 800 North Capitol Street NW., suite 700, Washington, DC.

FOR FURTHER INFORMATION CONTACT: Tim Backman, Aerospace Engineer, Airframe Branch, ANM–120S, FAA, Transport Airplane Directorate, Seattle Aircraft Certification Office, 1601 Lind Avenue SW., Renton, Washington 98055–4056; telephone (206) 227–2776; fax (206) 227–1181.

SUPPLEMENTARY INFORMATION: A proposal to amend part 39 of the Federal Aviation Regulations (14 CFR part 39) to include an airworthiness directive (AD) that is applicable to certain Boeing Model 747 series airplanes was published in the **Federal Register** on November 10, 1994 (59 FR 56008). That action proposed to require replacement of bottle bore style fuse pins, installed in the forward position of the upper link on the inboard and outboard struts, with either third generation fuse pins or new bulkhead style pins. That action also proposed to require repetitive detailed visual inspections to detect corrosion of bulkhead style fuse pins; magnetic particle inspections to detect cracks in those pins; and replacement of any corroded or cracked bulkhead style fuse pin with a third generation fuse pin or with a new bulkhead style pin. Installation of a third generation fuse pin, if accomplished, would constitute terminating action for the inspection requirements of the proposed AD.

Interested persons have been afforded an opportunity to participate in the making of this amendment. Due consideration has been given to the two comments received.

Both commenters support the proposed rule.

After careful review of the available data, including the comments noted above, the FAA has determined that air safety and the public interest require the adoption of the rule as proposed.

There are approximately 869 Model 747 series airplanes of the affected design in the worldwide fleet. The FAA estimates that 147 airplanes of U.S. registry will be affected by this AD, that it will take approximately 122 work hours per airplane to accomplish the replacement of fuse pins with bulkhead style pins, and that the average labor rate is $60 per work hour. Based on these figures, the total cost impact on U.S. operators who replace fuse pins with bulkhead style pins is estimated to be $7,320 per airplane.

It will take approximately 140 work hours per airplane to accomplish the replacement of fuse pins with third generation pins. The average labor rate is $60 per work hour. Based on these figures, the total cost impact on U.S. operators who replace fuse pins with third generation pins is estimated to be $8,400 per airplane.

It will take approximately 1.5 work hours per airplane to accomplish the inspections (in addition to the work hours necessary for fuse pin replacement). The average labor rate is $60 per work hour. Based on these figures, the total cost impact on U.S. operators for the required inspections is estimated to be $90 per airplane per inspection.

The cost of required replacement parts will vary from airplane to airplane, depending upon the current airplane configuration.

The total cost impact figure discussed above is based on assumptions that no operator has yet accomplished any of the requirements of this AD action, and that no operator would accomplish those actions in the future if this AD were not adopted.

The number of required work hours, as indicated above, is presented as if the accomplishment of the inspection and replacement actions were to be conducted as ''stand alone'' actions. However, in actual practice, these actions, for the most part, would be accomplished coincidentally or in combination with normally scheduled airplane inspections and other maintenance program tasks. Therefore, the actual number of necessary additional work hours would be minimal in many instances. Additionally, any costs associated with special airplane scheduling would be minimal.

The FAA recognizes that the obligation to maintain aircraft in an airworthy condition is vital, but sometimes expensive. Because AD's require specific actions to address specific unsafe conditions, they appear to impose costs that would not otherwise be borne by operators.

However, because of the general obligation of operators to maintain aircraft in an airworthy condition, this appearance is deceptive. Attributing those costs solely to the issuance of this AD is unrealistic because, in the interest of maintaining safe aircraft, prudent operators would accomplish the required actions even if they were not required to do so by the AD.

A full cost-benefit analysis has not been accomplished for this AD. As a matter of law, in order to be airworthy, an aircraft must conform to its type design and be in a condition for safe operation. The type design is approved only after the FAA makes a determination that it complies with all applicable airworthiness requirements. In adopting and maintaining those requirements, the FAA has already made the determination that they establish a level of safety that is cost-beneficial. When the FAA, as in this AD, makes a finding of an unsafe condition, this means that the original cost-beneficial level of safety is no longer being achieved and that the required actions are necessary to restore that level of safety. Because this level of safety has already been determined to be cost-beneficial, a full cost-benefit analysis for this AD would be redundant and unnecessary.

The regulations adopted herein will not have substantial direct effects on the States, on the relationship between the national government and the States, or on the distribution of power and responsibilities among the various levels of government. Therefore, in accordance with Executive Order 12612, it is determined that this final rule does not have sufficient federalism implications to warrant the preparation of a Federalism Assessment.

For the reasons discussed above, I certify that this action (1) is not a ''significant regulatory action'' under Executive Order 12866; (2) is not a ''significant rule'' under DOT Regulatory Policies and Procedures (44 FR 11034, February 26, 1979); and (3) will not have a significant economic impact, positive or negative, on a substantial number of small entities under the criteria of the Regulatory Flexibility Act. A final evaluation has been prepared for this action and it is contained in the Rules Docket. A copy of it may be obtained from the Rules Docket at the location provided under the caption **ADDRESSES.**

List of Subjects in 14 CFR Part 39

Air transportation, Aircraft, Aviation safety, Incorporation by reference, Safety.

Adoption of the Amendment

Accordingly, pursuant to the authority delegated to me by the Administrator, the Federal Aviation Administration amends part 39 of the Federal Aviation Regulations (14 CFR part 39) as follows:

PART 39—AIRWORTHINESS DIRECTIVES

1. The authority citation for part 39 continues to read as follows:

Authority: 49 U.S.C. App. 1354(a), 1421 and 1423; 49 U.S.C. 106(g); and 14 CFR 11.89.

§ 39.13 [Amended]

2. Section 39.13 is amended by adding the following new airworthiness directive:

95–06–02 Boeing: Amendment 39–9172. Docket 94–NM–123–AD.

Applicability: Model 747 series airplanes, line numbers 1 through 967 inclusive, and 969 through 922 inclusive; excluding airplanes equipped with Pratt & Whitney PW4000 or General Electric CF6–80C2 series engines; certificated in any category.

Note 1: This AD does not require that the actions be accomplished on the struts of airplanes having straight bore fuse pins (installed on Model 747 series airplanes equipped with Pratt & Whitney PW4000 or General Electric CF6–80C2 series engines) or 15–5 corrosion resistant steel (third generation) fuse pins.

Compliance: Required as indicated, unless accomplished previously.

To prevent failure of the strut and loss of an engine due to corrosion or cracking of the fuse pins, accomplish the following:

(a) For airplanes having bottle bore style fuse pins in the forward position on the upper link: Replace any bottle bore style fuse pin with a new bulkhead style fuse pin in the forward position, or with 15–5 corrosion resistant steel (third generation) fuse pins in the forward position, in accordance with Boeing Alert Service Bulletin 747–54A2166, dated April 28, 1994, at the later of the times specified in paragraphs (a)(1) and (a)(2) of this AD.

(1) Prior to the accumulation of 5,000 landings on the fuse pin, or within 5 years since installation of the pin, whichever occurs first. Or

(2) Within 6 months after the effective date of this AD.

Note 2: Third generation fuse pins are installed in pairs (in the forward and aft positions). Therefore, replacement of an individual upper link fuse pin in the forward position with a third generation pin also would necessitate replacement of the pin in the aft position.

Note 3: The alert service bulletin references Boeing Service Bulletin 747–54–2155, dated September 23, 1993, as an additional source of service information for replacement of the fuse pins with 15–5 corrosion resistant steel (third generation) fuse pins. Installation of these third generation fuse pins is preferred over installation of bulkhead style fuse pins.

(b) For airplanes having bulkhead style fuse pins in the forward position on the upper link: Perform a detailed visual inspection to detect corrosion of the pins, and a magnetic particle inspection to detect cracks, in accordance with Boeing Alert Service Bulletin 747–54A2166, dated April 28, 1994, at the later of the times specified in paragraphs (b)(1) and (b)(2) of this AD.

(1) Prior to the accumulation of 8,000 landings on the fuse pin, or within 8 years since installation of the pin, whichever occurs first. Or

(2) Within 12 months after the effective date of this AD.

(c) If no corrosion or crack is found during the inspection required by paragraph (b) of this AD, repeat the inspections thereafter at the intervals specified in paragraph (c)(1) or (c)(2) of this AD, as applicable.

(1) For the inboard and outboard struts on airplanes other than those identified in paragraph (c)(2) of this AD: Repeat the inspections at intervals not to exceed 1,000 landings.

(2) For the outboard struts on airplanes equipped with Rolls-Royce RB211–524G or –524H series engines: Repeat the inspections at intervals not to exceed 2,000 landings.

Note 4: The outboard struts of airplanes equipped with Rolls-Royce RB211–524G or –524H series engines are equipped with thick wall ''4330 steel'' bulkhead style fuse pins in the forward position of the upper link. Crack propagation to critical length in these thick wall pins is slower than for pins installed on the struts of airplanes equipped with engines other than the Rolls-Royce RB211–524G or –524H series.

(d) If any corrosion or crack is found during any inspection required by this AD, prior to further flight, replace the corroded or cracked pin with either a new bulkhead style fuse pin in the forward position of the upper link, or with 15–5 corrosion resistant steel (third generation) fuse pins in the forward and aft positions of the upper link, in accordance with Boeing Alert Service Bulletin 747–54A2166, dated April 28, 1994.

(1) If the corroded or cracked fuse pin is replaced with a new bulkhead style fuse pin, prior to the accumulation of 8,000 landings on the new pin, or within 8 years since installation of the new pin, whichever occurs first, perform a detailed visual inspection to detect corrosion of the new pin, and a magnetic particle inspection to detect cracks of the new pin, in accordance with Boeing Alert Service Bulletin 747–54A2166, dated April 28, 1994. Repeat these inspections thereafter at the interval specified in paragraph (d)(1)(i) or (d)(1)(ii) of this AD, as applicable.

(i) For the inboard and outboard struts on airplanes other than those identified in paragraph (d)(1)(ii) of this AD: Repeat the inspections at intervals not to exceed 1,000 landings.

(ii) For the outboard struts on airplanes equipped with Rolls-Royce RB211–524G or –524H series engines: Repeat the inspections at intervals not to exceed 2,000 landings.

(2) If the corroded or cracked fuse pin is replaced with a 15–5 corrosion resistant steel

(third generation) fuse pin, no further action is required by this AD.

(e) Installation of 15–5 corrosion resistant steel (third generation) fuse pins in the forward and aft positions of the upper link on the inboard or outboard strut constitutes terminating action for the requirements of this AD.

(f) An alternative method of compliance or adjustment of the compliance time that provides an acceptable level of safety may be used if approved by the Manager, Manager, Seattle Aircraft Certification Office (ACO), FAA, Transport Airplane Directorate. Operators shall submit their requests through an appropriate FAA Principal Maintenance Inspector, who may add comments and then send it to the Manager, Manager, Seattle ACO.

Note 5: Information concerning the existence of approved alternative methods of compliance with this AD, if any, may be obtained from the Seattle ACO.

(g) Special flight permits may be issued in accordance with sections 21.197 and 21.199 of the Federal Aviation Regulations (14 CFR 21.197 and 21.199) to operate the airplane to a location where the requirements of this AD can be accomplished.

(h) The replacement, inspections, and installation shall be done in accordance with Boeing Alert Service Bulletin 747–54A2166, dated April 28, 1994. This incorporation by reference was approved by the Director of the Federal Register in accordance with 5 U.S.C. 552(a) and 1 CFR part 51. Copies may be obtained from Boeing Commercial Airplane Group, P.O. Box 3707, Seattle, Washington 98124–2207. Copies may be inspected at the FAA, Transport Airplane Directorate, 1601 Lind Avenue, SW., Renton, Washington; or at the Office of the Federal Register, 800 North Capitol Street NW., suite 700, Washington, DC.

(i) This amendment becomes effective on April 13, 1995.

Issued in Renton, Washington, on March 3, 1995.

Darrell M. Pederson,

Acting Manager, Transport Airplane Directorate, Aircraft Certification Service.

[FR Doc. 95–5781 Filed 3–13–95; 8:45 am]

BILLING CODE 4910–13–U

---

14 CFR Part 39

[Docket No. 94–NM–126–AD; Amendment 39–9168; AD 95–05–01]

Airworthiness Directives; British Aerospace Model BAe 146–100A, –200A, and –300A Series Airplanes

AGENCY: Federal Aviation Administration, DOT.

ACTION: Final rule.

SUMMARY: This amendment adopts a new airworthiness directive (AD), applicable to all British Aerospace Model BAe 146–100A, –200A, and –300A series airplanes, that requires conducting closed loop tests to determine the setting of the underfrequency trip level on suspect generator control units (GCU), and either the correction of discrepancies or replacement of the GCU. This amendment is prompted by several malfunctions of in-service GCU's due to the effects of setting the underfrequency trip level too high. The actions specified by this AD are intended to correct GCU's that may have the underfrequency level set too high, which could result in the unwanted shut down of an electrical generator; this condition may lead to loss of all generated electrical power on the airplane when other generator faults or failures occur.

DATES: Effective April 13, 1995.

The incorporation by reference of certain publications listed in the regulations is approved by the Director of the Federal Register as of April 13, 1995.

ADDRESSES: The service information referenced in this AD may be obtained from British Aerospace Holdings, Inc., Avro International Aerospace Division, P.O. Box 16039, Dulles International Airport, Washington, DC 20041–6039. This information may be examined at the Federal Aviation Administration (FAA), Transport Airplane Directorate, Rules Docket, 1601 Lind Avenue, SW., Renton, Washington; or at the Office of the Federal Register, 800 North Capitol Street NW., suite 700, Washington, DC.

FOR FURTHER INFORMATION CONTACT: William Schroeder, Aerospace Engineer, ANM–113, Standardization Branch, FAA, Transport Airplane Directorate, 1601 Lind Avenue SW., Renton, Washington 98055–4056; telephone (206) 227–2148; fax (206) 227–1320.

SUPPLEMENTARY INFORMATION: A proposal to amend part 39 of the Federal Aviation Regulations (14 CFR part 39) to include an airworthiness directive (AD) that is applicable to all British Aerospace Model BAe 146–100A, –200A, and –300A series airplanes was published in the **Federal Register** on November 16, 1994 (59 FR 59179). That action proposed to require checking the part and serial number on the data plate of each GCU to identify discrepant units, and conducting closed loop tests on affected GCU's to determine the setting of the underfrequency trip level. That action also proposed to require either adjusting the underfrequency trip level or replacing the discrepant GCU with a serviceable unit, and conducting post assembly testing.

Interested persons have been afforded an opportunity to participate in the making of this amendment. Due consideration has been given to the single comment received.

The commenter supports the proposed rule.

As a result of recent communications with the Air Transport Association (ATA) of America, the FAA has learned that, in general, some operators may misunderstand the legal effect of AD's on airplanes that are identified in the applicability provision of the AD, but that have been altered or repaired in the area addressed by the AD. The FAA points out that all airplanes identified in the applicability provision of an AD are legally subject to the AD. If an airplane has been altered or repaired in the affected area in such a way as to affect compliance with the AD, the owner or operator is required to obtain FAA approval for an alternative method of compliance with the AD, in accordance with the paragraph of each AD that provides for such approvals. A note has been added to this final rule to clarify this long-standing requirement.

After careful review of the available data, including the comment noted above, the FAA has determined that air safety and the public interest require the adoption of the rule with the change previously described. The FAA has determined that this change will neither increase the economic burden on any operator nor increase the scope of the AD.

The FAA estimates that 43 airplanes of U.S. registry will be affected by this AD, that it will take approximately 1 work hour per airplane to accomplish the required actions, and that the average labor rate is $60 per work hour. Based on these figures, the total cost impact of the AD on U.S. operators is estimated to be $2,580, or $60 per airplane.

The total cost impact figure discussed above is based on assumptions that no operator has yet accomplished any of the requirements of this AD action, and that no operator would accomplish those actions in the future if this AD were not adopted.

The regulations adopted herein will not have substantial direct effects on the States, on the relationship between the national government and the States, or on the distribution of power and responsibilities among the various levels of government. Therefore, in accordance with Executive Order 12612, it is determined that this final rule does not have sufficient federalism implications to warrant the preparation of a Federalism Assessment.

For the reasons discussed above, I certify that this action (1) is not a ''significant regulatory action'' under Executive Order 12866; (2) is not a

''significant rule'' under DOT Regulatory Policies and Procedures (44 FR 11034, February 26, 1979); and (3) will not have a significant economic impact, positive or negative, on a substantial number of small entities under the criteria of the Regulatory Flexibility Act. A final evaluation has been prepared for this action and it is contained in the Rules Docket. A copy of it may be obtained from the Rules Docket at the location provided under the caption **ADDRESSES.**

List of Subjects in 14 CFR Part 39

Air transportation, Aircraft, Aviation safety, Incorporation by reference, Safety.

Adoption of the Amendment

Accordingly, pursuant to the authority delegated to me by the Administrator, the Federal Aviation Administration amends part 39 of the Federal Aviation Regulations (14 CFR part 39) as follows:

PART 39—AIRWORTHINESS DIRECTIVES

1. The authority citation for part 39 continues to read as follows:

Authority: 49 U.S.C. App. 1354(a), 1421 and 1423; 49 U.S.C. 106(g); and 14 CFR 11.89.

§ 39.13 [Amended]

2. Section 39.13 is amended by adding the following new airworthiness directive:

95–05–01 British Aerospace Regional Aircraft Limited, Avro International Aerospace Division (Formerly British Aerospace, plc; British Aerospace Commercial Aircraft Limited): Amendment 39–9168. Docket 94–NM–126–AD.

Applicability: All Model British Aerospace Model BAe 146–100A, –200A, and –300A series airplanes, certificated in any category.

Note 1: This AD applies to each airplane identified in the preceding applicability provision, regardless of whether it has been modified, altered, or repaired in the area subject to the requirements of this AD. For airplanes that have been modified, altered, or repaired so that the performance of the requirements of this AD is affected, the owner/operator must use the authority provided in paragraph (b) to request approval from the FAA. This approval may address either no action, if the current configuration eliminates the unsafe condition; or different actions necessary to address the unsafe condition described in this AD. Such a request should include an assessment of the effect of the changed configuration on the unsafe condition addressed by this AD. In no case does the presence of any modification, alteration, or repair remove any airplane from the applicability of this AD.

Compliance: Required as indicated, unless accomplished previously.

To correct generator control units (GCU) that may have the under-frequency trip level set too high, which could lead to the unwanted shut down of an electrical generator, accomplish the following:

(a) Within 6 months after the effective date of this AD, check the part and serial number on the data plate of each generator control unit (GCU). If the part number is one of those affected and the serial number is listed in Addendum 1 of GEC-Marconi Service Bulletin HGE 24–23, dated March 11, 1994, prior to further flight, conduct a closed loop test to determine the setting of the underfrequency trip level, in accordance with that service bulletin.

(1) If the level exceeds that specified in GEC-Marconi Service Bulletin HGE 24–23, dated March 11, 1994, prior to further flight, adjust the level in accordance with that service bulletin; or replace the GCU with a serviceable unit, in accordance with Avro Service Bulletin S.B. 24–103, dated March 24, 1994.

(2) Prior to further flight, after adjustment or replacement of the GCU as required by paragraph (a)(1) of this AD, conduct the post assembly testing in accordance with Avro Service Bulletin S.B. 24–103, dated March 24, 1994.

(b) An alternative method of compliance or adjustment of the compliance time that provides an acceptable level of safety may be used if approved by the Manager, Standardization Branch, ANM–113, FAA, Transport Airplane Directorate. Operators shall submit their requests through an appropriate FAA Principal Maintenance Inspector, who may add comments and then send it to the Manager, Standardization Branch, ANM–113.

Note 2: Information concerning the existence of approved alternative methods of compliance with this AD, if any, may be obtained from the Standardization Branch, ANM–113.

(c) Special flight permits may be issued in accordance with sections 21.197 and 21.199 of the Federal Aviation Regulations (14 CFR 21.197 and 21.199) to operate the airplane to a location where the requirements of this AD can be accomplished.

(d) The closed loop test and adjustment shall be done in accordance with GEC-Marconi Service Bulletin HGE 24–23, dated March 11, 1994. The replacement and post assembly test shall be done in accordance with Avro Service Bulletin S.B. 24–103, dated March 24, 1994. This incorporation by reference was approved by the Director of the Federal Register in accordance with 5 U.S.C. 552(a) and 1 CFR part 51. Copies may be obtained from British Aerospace Holding, Inc., Avro International Aerospace Division, P.O. Box 16039, Dulles International Airport, Washington, DC 20041–6039. Copies may be inspected at the FAA, Transport Airplane Directorate, 1601 Lind Avenue, SW., Renton, Washington; or at the Office of the Federal Register, 800 North Capitol Street, NW., suite 700, Washington, DC.

(e) This amendment becomes effective on April 13, 1995.

Issued in Renton, Washington, on February 27, 1995.

Darrell M. Pederson,

Acting Manager, Transport Airplane Directorate, Aircraft Certification Service.

[FR Doc. 95–5246 Filed 3–13–95; 8:45 am]

BILLING CODE 4910–13–U

---

14 CFR Part 39

[Docket No. 94–NM–136–AD; Amendment 39–9169; AD 95–05–02]

Airworthiness Directives; Airbus Model A300 B4–2C, B4–103, and B4–203 Series Airplanes; and Model A300–600 B4–620, B4–622, B4–603, and B4–601 Series Airplanes

AGENCY: Federal Aviation Administration, DOT.

ACTION: Final rule.

SUMMARY: This amendment adopts a new airworthiness directive (AD), applicable to certain Airbus Model A300 and A300–600 series airplanes, that requires modification of the fuel tank jettison system. This amendment is prompted by a quality survey which revealed that the electrical bonding of the fuel jettison system has insufficient protection from a lightning strike. The actions specified by this AD are intended to prevent electrical arcing and resultant fire in the event of a lightning strike.

DATES: Effective April 13, 1995.

The incorporation by reference of certain publications listed in the regulations is approved by the Director of the Federal Register as of April 13, 1995.

ADDRESSES: The service information referenced in this AD may be obtained from Airbus Industrie, 1 Rond Point Maurice Bellonte, 31707 Blagnac Cedex, France. This information may be examined at the Federal Aviation Administration (FAA), Transport Airplane Directorate, Rules Docket, 1601 Lind Avenue, SW., Renton, Washington; or at the Office of the Federal Register, 800 North Capitol Street, NW., suite 700, Washington, DC.

FOR FURTHER INFORMATION CONTACT: Stephen Slotte, Aerospace Engineer, Standardization Branch, ANM–113, FAA, Transport Airplane Directorate, 1601 Lind Avenue SW., Renton, Washington 98055–4056; telephone (206) 227–2797; fax (206) 227–1320.

SUPPLEMENTARY INFORMATION: A proposal to amend part 39 of the Federal Aviation Regulations (14 CFR part 39) to include an airworthiness directive (AD) that is applicable to certain Airbus Model A300 and A300–600 series

airplanes was published in the **Federal Register** on November 16, 1994 (59 FR 59178). That action proposed to require modification of the fuel tank jettison system.

Interested persons have been afforded an opportunity to participate in the making of this amendment. Due consideration has been given to the two comments received.

Both commenters support the proposed rule.

As a result of recent communications with the Air Transport Association (ATA) of America, the FAA has learned that, in general, some operators may misunderstand the legal effect of AD's on airplanes that are identified in the applicability provision of the AD, but that have been altered or repaired in the area addressed by the AD. The FAA points out that all airplanes identified in the applicability provision of an AD are legally subject to the AD. If an airplane has been altered or repaired in the affected area in such a way as to affect compliance with the AD, the owner or operator is required to obtain FAA approval for an alternative method of compliance with the AD, in accordance with the paragraph of each AD that provides for such approvals. A note has been added to this final rule to clarify this long-standing requirement.

After careful review of the available data, including the comments noted above, the FAA has determined that air safety and the public interest require the adoption of the rule with the change previously described. The FAA has determined that this change will neither increase the economic burden on any operator nor increase the scope of the AD.

The FAA estimates that 34 airplanes of U.S. registry will be affected by this AD, that it will take approximately 21 work hours per airplane to accomplish the required actions, and that the average labor rate is $60 per work hour. Required parts will be supplied by the manufacturer at no cost to the operators. Based on these figures, the total cost impact of the AD on U.S. operators is estimated to be $42,840, or $1,260 per airplane.

The total cost impact figure discussed above is based on assumptions that no operator has yet accomplished any of the requirements of this AD action, and that no operator would accomplish those actions in the future if this AD were not adopted.

The regulations adopted herein will not have substantial direct effects on the States, on the relationship between the national government and the States, or on the distribution of power and responsibilities among the various levels of government. Therefore, in accordance with Executive Order 12612, it is determined that this final rule does not have sufficient federalism implications to warrant the preparation of a Federalism Assessment.

For the reasons discussed above, I certify that this action (1) is not a ''significant regulatory action'' under Executive Order 12866; (2) is not a ''significant rule'' under DOT Regulatory Policies and Procedures (44 FR 11034, February 26, 1979); and (3) will not have a significant economic impact, positive or negative, on a substantial number of small entities under the criteria of the Regulatory Flexibility Act. A final evaluation has been prepared for this action and it is contained in the Rules Docket. A copy of it may be obtained from the Rules Docket at the location provided under the caption **ADDRESSES**.

List of Subjects in 14 CFR Part 39

Air transportation, Aircraft, Aviation safety, Incorporation by reference, Safety.

Adoption of the Amendment

Accordingly, pursuant to the authority delegated to me by the Administrator, the Federal Aviation Administration amends part 39 of the Federal Aviation Regulations (14 CFR part 39) as follows:

PART 39—AIRWORTHINESS DIRECTIVES

1. The authority citation for part 39 continues to read as follows:

Authority: 49 U.S.C. App. 1354(a), 1421 and 1423; 49 U.S.C. 106(g); and 14 CFR 11.89.

§ 39.13 [Amended]

2. Section 39.13 is amended by adding the following new airworthiness directive:

95–05–02 Airbus Industrie: Amendment 39–9169. Docket 94–NM–136–AD.

Applicability: Model A300 B4–2C, B4–103, and B4–203 series airplanes on which Airbus Modification 0013 has been installed; and Model A300–600 B4–620, B4–622, B4–603, and B4–601 series airplanes on which Airbus Modification 4607 has not been installed; certificated in any category.

Note 1: This AD applies to each airplane identified in the preceding applicability provision, regardless of whether it has been modified, altered, or repaired in the area subject to the requirements of this AD. For airplanes that have been modified, altered, or repaired so that the performance of the requirements of this AD is affected, the owner/operator must use the authority provided in paragraph (b) to request approval from the FAA. This approval may address either no action, if the current configuration eliminates the unsafe condition; or different actions necessary to address the unsafe condition described in this AD. Such a request should include an assessment of the effect of the changed configuration on the unsafe condition addressed by this AD. In no case does the presence of any modification, alteration, or repair remove any airplane from the applicability of this AD.

Compliance: Required as indicated, unless accomplished previously.

To prevent electrical arcing and resultant fire in the event of a lightning strike, accomplish the following:

(a) Within 6 months after the effective date of this AD, modify the fuel tank jettison system in accordance with Airbus Alert Service Bulletin A300–28A065, Revision 1, dated February 14, 1994 (for Model A300 series airplanes), or Airbus Alert Service Bulletin A300–28A6033, Revision 1, dated February 14, 1994 (for Model A300–600 series airplanes); as applicable.

(b) An alternative method of compliance or adjustment of the compliance time that provides an acceptable level of safety may be used if approved by the Manager, Standardization Branch, ANM–113, FAA, Transport Airplane Directorate. Operators shall submit their requests through an appropriate FAA Principal Maintenance Inspector, who may add comments and then send it to the Manager, Standardization Branch, ANM–113.

Note 2: Information concerning the existence of approved alternative methods of compliance with this AD, if any, may be obtained from the Standardization Branch, ANM–113.

(c) Special flight permits may be issued in accordance with sections 21.197 and 21.199 of the Federal Aviation Regulations (14 CFR 21.197 and 21.199) to operate the airplane to a location where the requirements of this AD can be accomplished.

(d) The modification shall be done in accordance with the following Airbus Industrie service bulletins, as applicable, which contain the specified effective pages:

Service bulletin referenced and date	Page No.	Revision level shown on page	Date shown on page
A300–28A065, Revision 1, February 14, 1994	1–15	1	February 14, 1994.

Service bulletin referenced and date	Page No.	Revision level shown on page	Date shown on page
A300–28A6033, Revision 1, February 14, 1994	1–3, 5–14 4	1 Original	February 14, 1994. April 21, 1993.

This incorporation by reference was approved by the Director of the Federal Register in accordance with 5 U.S.C. 552(a) and 1 CFR part 51. Copies may be obtained from Airbus Industrie, 1 Rond Point Maurice Bellonte, 31707 Blagnac Cedex, France. Copies may be inspected at the FAA, Transport Airplane Directorate, 1601 Lind Avenue, SW., Renton, Washington; or at the Office of the Federal Register, 800 North Capitol Street, NW., suite 700, Washington, DC.

(e) This amendment becomes effective on April 13, 1995.

Issued in Renton, Washington, on February 27, 1995.

Darrell M. Pederson,

Acting Manager, Transport Airplane Directorate, Aircraft Certification Service.

[FR Doc. 95–5245 Filed 3–13–95; 8:45 am]

BILLING CODE 4910–13–U

14 CFR Part 39

[Docket No. 94–NM–147–AD; Amendment 39–9171; AD 95–06–01]

Airworthiness Directives; Boeing Model 747–200 and –300 Series Airplanes Equipped With General Electric CF6–80C2 Series Engines

AGENCY: Federal Aviation Administration, DOT.

ACTION: Final rule.

SUMMARY: This amendment adopts a new airworthiness directive (AD), applicable to certain Boeing Model 747–200 and –300 series airplanes, that requires various inspections and functional tests of the thrust reverser control and indication system, and correction of any discrepancy found. This amendment is prompted by an investigation to determine the controllability of Model 747 series airplanes following an in-flight thrust reverser deployment, which has revealed that, in the event of thrust reverser deployment during high-speed climb or during cruise, these airplanes could experience control problems. The actions specified by this AD are intended to ensure the integrity of the fail safe features of the thrust reverser system by preventing possible failure modes in the thrust reverser control system that can result in inadvertent deployment of a thrust reverser during flight.

DATES: Effective April 13, 1995.

The incorporation by reference of certain publications listed in the regulations is approved by the Director of the Federal Register as of April 13, 1995.

ADDRESSES: The service information referenced in this AD may be obtained from Boeing Commercial Airplane Group, P.O. Box 3707, Seattle, Washington 98124–2207. This information may be examined at the Federal Aviation Administration (FAA), Transport Airplane Directorate, Rules Docket, 1601 Lind Avenue, SW., Renton, Washington; or at the Office of the Federal Register, 800 North Capitol Street, NW., suite 700, Washington, DC.

FOR FURTHER INFORMATION CONTACT: G. Michael Collins, Aerospace Engineer, Propulsion Branch, ANM–140S, FAA, Transport Airplane Directorate, Seattle Aircraft Certification Office, 1601 Lind Avenue, SW., Renton, Washington 98055–4056; telephone (206) 227–2689; fax (206) 227–1181.

SUPPLEMENTARY INFORMATION: A proposal to amend part 39 of the Federal Aviation Regulations (14 CFR part 39) to include an airworthiness directive (AD) that is applicable to certain Boeing Model 747–200 and –300 series airplanes was published in the **Federal Register** on November 8, 1994 (59 FR 55595). That action proposed to require various inspections and functional tests of the thrust reverser control and indication system on certain Model 747–200 and –300 series airplanes, and the correction of any discrepancy found during the inspections and tests.

Interested persons have been afforded an opportunity to participate in the making of this amendment. Due consideration has been given to the two comments received.

Both commenters support the proposed rule.

As a result of recent communications with the Air Transport Association (ATA) of America, the FAA has learned that, in general, some operators may misunderstand the legal effect of AD's on airplanes that are identified in the applicability provision of the AD, but that have been altered or repaired in the area addressed by the AD. The FAA points out that all airplanes identified in the applicability provision of an AD are legally subject to the AD. If an airplane has been altered or repaired in the affected area in such a way as to affect compliance with the AD, the owner or operator is required to obtain FAA approval for an alternative method of compliance with the AD, in accordance with the paragraph of each AD that provides for such approvals. A note has been added to this final rule to clarify this requirement.

The FAA has recently reviewed the figures it has used over the past several years in calculating the economic impact of AD activity. In order to account for various inflationary costs in the airline industry, the FAA has determined that it is necessary to increase the labor rate used in these calculations from $55 per work hour to $60 per work hour. The economic impact information, below, has been revised to reflect this increase in the specified hourly labor rate.

After careful review of the available data, including the comments noted above, the FAA has determined that air safety and the public interest require the adoption of the rule with the changes previously described. The FAA has determined that these changes will neither increase the economic burden on any operator nor increase the scope of the AD.

There are approximately 9 Model 747–200 and –300 series airplanes of the affected design in the worldwide fleet. The FAA estimates that 2 airplanes of U.S. registry will be affected by this AD, that it will take approximately 33 work hours per airplane to accomplish the required actions, and that the average labor rate is $60 per work hour. Based on these figures, the total cost impact of the AD on U.S. operators is estimated to be $3,960, or $1,980 per airplane.

The total cost impact figure discussed above is based on assumptions that no operator has yet accomplished any of the requirements of this AD action, and that no operator would accomplish those actions in the future if this AD were not adopted.

The regulations adopted herein will not have substantial direct effects on the States, on the relationship between the national government and the States, or on the distribution of power and responsibilities among the various levels of government. Therefore, in accordance with Executive Order 12612, it is determined that this final rule does not have sufficient federalism

implications to warrant the preparation of a Federalism Assessment.

For the reasons discussed above, I certify that this action (1) is not a ''significant regulatory action'' under Executive Order 12866; (2) is not a ''significant rule'' under DOT Regulatory Policies and Procedures (44 FR 11034, February 26, 1979); and (3) will not have a significant economic impact, positive or negative, on a substantial number of small entities under the criteria of the Regulatory Flexibility Act. A final evaluation has been prepared for this action and it is contained in the Rules Docket. A copy of it may be obtained from the Rules Docket at the location provided under the caption **ADDRESSES**.

List of Subjects in 14 CFR Part 39

Air transportation, Aircraft, Aviation safety, Incorporation by reference, Safety.

Adoption of the Amendment

Accordingly, pursuant to the authority delegated to me by the Administrator, the Federal Aviation Administration amends part 39 of the Federal Aviation Regulations (14 CFR part 39) as follows:

PART 39—AIRWORTHINESS DIRECTIVES

1. The authority citation for part 39 continues to read as follows:

Authority: 49 U.S.C. App. 1354(a), 1421 and 1423; 49 U.S.C. 106(g); and 14 CFR 11.89.

39.13 [Amended]

2. Section 39.13 is amended by adding the following new airworthiness directive:

95–06–01 Boeing: Amendment 39–9171. Docket 94–NM–147–AD.

Applicability: Model 747–200 and –300 series airplanes equipped with General Electric CF6–80C2 series engines with Power Management Control (PMC) engine controls, certificated in any category.

Note 1: This AD applies to each airplane identified in the preceding applicability provision, regardless of whether it has been modified, altered, or repaired in the area subject to the requirements of this AD. For airplanes that have been modified, altered, or repaired so that the performance of the requirements of this AD is affected, the owner/operator must use the authority provided in paragraph (e) to request approval from the FAA. This approval may address either no action, if the current configuration eliminates the unsafe condition; or different actions necessary to address the unsafe condition described in this AD. Such a request should include an assessment of the effect of the changed configuration on the unsafe condition addressed by this AD. In no case does the presence of any modification, alteration, or repair remove any airplane from the applicability of this AD.

Compliance: Required as indicated, unless accomplished previously.

To ensure the integrity of the fail safe features of the thrust reverser system, accomplish the following:

(a) Within 90 days after the effective date of this AD, perform tests of the position switch module and the cone brake of the center drive unit (CDU) on each thrust reverser, and perform an inspection to detect damage to the bullnose seal on the translating sleeve on each thrust reverser, in accordance with paragraphs III.A. through III.C. of the Accomplishment Instructions of Boeing Service Bulletin 747–78A2130, dated May 26, 1994. Repeat the tests and inspection thereafter at intervals not to exceed 1,000 hours time-in-service.

(b) Within 9 months after the effective date of this AD, perform inspections and functional tests of the thrust reverser control and indication system in accordance with paragraphs III.D. through III.F., III.H., and III.I. of the Accomplishment Instructions of Boeing Service Bulletin 747–78A2130, dated May 26, 1994. Repeat these inspections and functional tests thereafter at intervals not to exceed 18 months.

(c) If any of the inspections and/or functional tests required by this AD cannot be successfully performed, or if any discrepancy is found during those inspections and/or functional tests, accomplish either paragraph (c)(1) or (c)(2) of this AD.

(1) Prior to further flight, correct the discrepancy found, in accordance with Boeing Alert Service Bulletin 747–78A2130, dated May 26, 1994. Or

(2) The airplane may be operated in accordance with the provisions and limitations specified in an operator's FAA-approved Minimum Equipment List (MEL), provided that no more than one thrust reverser on the airplane is inoperative.

(d) Within 10 days after performing each initial inspection and test required by this AD, submit a report of the inspection and/or test results, both positive and negative, to the FAA, Seattle Aircraft Certification Office (ACO), ANM–100S, 1601 Lind Avenue, SW., Renton, Washington 98055–4056; fax (206) 227–1181. Information collection requirements contained in this regulation have been approved by the Office of Management and Budget (OMB) under the provisions of the Paperwork Reduction Act of 1980 (44 U.S.C. 3501 *et seq.*) and have been assigned OMB Control Number 2120–0056.

(e) An alternative method of compliance or adjustment of the compliance time that provides an acceptable level of safety may be used if approved by the Manager, Seattle Aircraft Certification Office (ACO), FAA, Transport Airplane Directorate. Operators shall submit their requests through an appropriate FAA Principal Maintenance Inspector, who may add comments and then send it to the Manager, Seattle ACO.

Note 2: Information concerning the existence of approved alternative methods of compliance with this AD, if any, may be obtained from the Seattle ACO.

(f) Special flight permits may be issued in accordance with sections 21.197 and 21.199 of the Federal Aviation Regulations (14 CFR 21.197 and 21.199) to operate the airplane to a location where the requirements of this AD can be accomplished.

(g) The inspections, corrections of discrepancies, and tests shall be done in accordance with Boeing Alert Service Bulletin 747–78A2130, dated May 26, 1994. This incorporation by reference was approved by the Director of the Federal Register in accordance with 5 U.S.C. 552(a) and 1 CFR part 51. Copies may be obtained from Boeing Commercial Airplane Group, P.O. Box 3707, Seattle, Washington 98124–2207. Copies may be inspected at the FAA, Transport Airplane Directorate, 1601 Lind Avenue, SW., Renton, Washington; or at the Office of the Federal Register, 800 North Capitol Street NW., suite 700, Washington, DC.

(h) This amendment becomes effective on April 13, 1995.

Issued in Renton, Washington, on March 3, 1995.

Darrell M. Pederson,

Acting Manager, Transport Airplane Directorate, Aircraft Certification Service.

[FR Doc. 95–5782 Filed 3–13–95; 8:45 am]

BILLING CODE 4910–13–U

---

14 CFR Part 39

[Docket No. 94–CE–05–AD; Amendment 39–9173; AD 94–18–04 R1]

Airworthiness Directives; Univair Aircraft Corporation Models Ercoupe 415–C, 415–CD, 415–D, 415–E, and 415–G, Forney F–1 and F–1A, Alon A–2 and A–2A, and Mooney M10 Airplanes

AGENCY: Federal Aviation Administration, DOT.

ACTION: Final rule; request for comments.

SUMMARY: This amendment revises Airworthiness Directive (AD) 94–18–04, which currently requires the following on Univair Aircraft Corporation (Univair) Models Ercoupe 415–C, 415–CD, 415–D, 415–E, and 415–G, Forney F–1 and F–1A, Alon A–2 and A–2A, and Mooney M10 airplanes: installing inspection openings in the outer wing panels, inspecting (one-time) the wing outer panel structural components for corrosion, and repairing any corroded wing outer panel structural component. Several reports of corrosion in the outer wing panels of the affected airplanes prompted that AD. This action incorporates a revision to the service information to include procedures that the Federal Aviation Administration (FAA) has determined are necessary for installing future outer wing panel inspection openings. The actions

specified by this AD are intended to prevent wing damage caused by a corroded wing outer panel structural component, which, if not detected and corrected, could progress to the point of structural failure.

DATES: Effective March 24, 1995.

The incorporation by reference of certain publications listed in the regulations is approved by the Director of the Federal Register as of March 24, 1995.

Comments for inclusion in the Rules Docket must be received on or before May 19, 1995.

ADDRESSES: Submit comments in triplicate to the FAA, Central Region, Office of the Assistant Chief Counsel, Attention: Rules Docket 94–CE–05–AD, Room 1558, 601 E. 12th Street, Kansas City, Missouri 64106.

Service information that applies to this AD may be obtained from the Univair Aircraft Corporation, 2500 Himalaya Road, Aurora, Colorado 80011; telephone (303) 375–8882; facsimile (303) 375–8888. This information may also be examined at the FAA, Central Region, Office of the Assistant Chief Counsel, Attention: Rules Docket No. 94–CE–05–AD, Room 1558, 601 E. 12th Street, Kansas City, Missouri 64106; or at the Office of the Federal Register, 800 North Capitol Street NW., suite 700, Washington, DC.

FOR FURTHER INFORMATION CONTACT: Mr. Roger P. Chudy, Aerospace Engineer, FAA, Denver Aircraft Certification Office, 5440 Roslyn Street, suite 133, Denver, Colorado 80216; telephone (303) 286–5684; facsimile (303) 286–5689.

SUPPLEMENTARY INFORMATION: AD 94–18–04, Amendment 39–9017 (59 FR 43727, September 25, 1994), currently requires the following on Univair Models Ercoupe 415–C, 415–CD, 415–D, 415–E, and 415–G, Forney F–1 and F–1A, Alon A–2 and A–2A, and Mooney M10 airplanes: installing inspection openings in the outer wing panels, inspecting (one-time) the wing outer panel structural components for corrosion, and repairing any corroded wing outer panel structural component. Accomplishment of these actions is in accordance with Univair Service Bulletin (SB) No. 29, Revision A, dated June 7, 1994.

Since the FAA issued AD 94–18–04, Univair has revised SB No. 29 to the Revision B level. This SB revision changes the dimension of one of the openings to position it symmetrically between two ribs; and clarifies the dimensioning system utilized in placement of the inspection openings. Univair SB No. 29, Revision B, also presents a further discussion of the service difficulties encountered on the referenced subject and clarifies the intent of the preliminary inspection procedure that may be accomplished prior to the installation of the inspection openings.

After examining the circumstances and reviewing all available information related to the incidents described above, the FAA has determined that (1) the procedures presented in Univair SB No. 29, Revision B, dated January 2, 1995, should be mandatory for future inspection opening installations; and (2) AD action should be taken in order to prevent wing damage caused by a corroded wing outer panel structural component, which, if not detected and corrected, could progress to the point of structural failure.

Since an unsafe condition has been identified that is likely to exist or develop in other Univair Models Ercoupe 415–C, 415–CD, 415–D, 415–E, and 415–G, Forney F–1 and F–1A, Alon A–2 and A–2A, and Mooney M10 airplanes of the same type design, this AD revises AD 94–18–04, Amendment 39–9017, to require installing inspection openings in the outer wing panels, inspecting (one-time) the wing outer panel structural components for corrosion, and repairing any corroded wing outer panel structural component. The actions are required to be accomplished in accordance with the instructions in Univair SB No. 29, Revision B, dated January 2, 1995. No further action will be required by owners/operators who have successfully accomplished these actions in accordance with either Univair SB No. 29, dated January 27, 1994, or Univair SB No. 29, Revision A, dated June 7, 1994.

Since a situation exists (the possibility of damaging the wing structure because of improper positioning of the inspection openings) that requires the immediate adoption of this regulation, it is found that notice and opportunity for public prior comment hereon are impracticable, and that good cause exists for making this amendment effective in less than 30 days.

Comments Invited

Although this action is in the form of a final rule that involves requirements affecting immediate flight safety and, thus, was not preceded by notice and opportunity to comment, comments are invited on this rule. Interested persons are invited to comment on this rule by submitting such written data, views, or arguments as they may desire. Communications should identify the Rules Docket number and be submitted in triplicate to the address specified above. All communications received on or before the closing date for comments will be considered, and this rule may be amended in light of the comments received. Factual information that supports the commenter's ideas and suggestions is extremely helpful in evaluating the effectiveness of the AD action and determining whether additional rulemaking action would be needed.

Comments are specifically invited on the overall regulatory, economic, environmental, and energy aspects of the rule that might suggest a need to modify the rule. All comments submitted will be available, both before and after the closing date for comments, in the Rules Docket for examination by interested persons. A report that summarizes each FAA-public contact concerned with the substance of this AD will be filed in the Rules Docket.

Commenters wishing the FAA to acknowledge receipt of their comments submitted in response to this notice must submit a self-addressed, stamped postcard on which the following statement is made: ''Comments to Docket No. 94–CE–05–AD.'' The postcard will be date stamped and returned to the commenter.

The regulations adopted herein will not have substantial direct effects on the States, on the relationship between the national government and the States, or on the distribution of power and responsibilities among the various levels of government. Therefore, in accordance with Executive Order 12612, it is determined that this final rule does not have sufficient federalism implications to warrant the preparation of a Federalism Assessment.

The FAA has determined that this regulation is an emergency regulation that must be issued immediately to correct an unsafe condition in aircraft, and is not a ''significant regulatory action'' under Executive Order 12866. It has been determined further that this action involves an emergency regulation under DOT Regulatory Policies and Procedures (44 FR 11034, February 26, 1979). If it is determined that this emergency regulation otherwise would be significant under DOT Regulatory Policies and Procedures, a final regulatory evaluation will be prepared and placed in the Rules Docket (otherwise, an evaluation is not required). A copy of it, if filed, may be obtained from the Rules Docket.

List of Subjects in 14 CFR Part 39

Air transportation, Aircraft, Aviation safety, Incorporation by reference, Safety.

Adoption of the Amendment

Accordingly, pursuant to the authority delegated to me by the Administrator, the Federal Aviation Administration amends part 39 of the Federal Aviation Regulations (14 CFR part 39) as follows:

PART 39—AIRWORTHINESS DIRECTIVES

1. The authority citation for part 39 continues to read as follows:

Authority: 49 U.S.C. App. 1354(a), 1421 and 1423; 49 U.S.C. 106(g); and 14 CFR 11.89.

§ 39.13 [Amended]

2. Section 39.13 is amended by removing AD 94–18–04, Amendment 39–9017 (59 FR 43727, September 25, 1994), and by adding a new airworthiness directive to read as follows:

94–18–04 R1 Univair Aircraft Corporation: Amendment 39–9173; Docket No. 94–CE–05–AD. Revises AD 94–18–04, Amendment 39–9017.

Applicability: Models Ercoupe 415–C, 415–CD, 415–D, 415–E, and 415–G, Forney F–1 and F–1A, Alon A–2 and A–2A, and Mooney M10 airplanes (all serial numbers), certificated in any category.

Note 1: This AD applies to each airplane identified in the preceding applicability provision, regardless of whether it has been modified, altered, or repaired in the area subject to the requirements of this AD. For airplanes that have been modified, altered, or repaired so that the performance of the requirements of this AD is affected, the owner/operator must use the authority provided in paragraph (d) of this AD to request approval from the FAA. This approval may address either no action, if the current configuration eliminates the unsafe condition, or different actions necessary to address the unsafe condition described in this AD. Such a request should include an assessment of the effect of the changed configuration on the unsafe condition addressed by this AD. In no case does the presence of any modification, alteration, or repair remove any aircraft from the applicability of this AD.

Compliance: Required within the next 12 calendar months after the effective date of this AD, unless already accomplished (See **Note 2**).

To prevent wing damage caused by a corroded wing outer panel structural component, which, if not detected and corrected, could progress to the point of structural failure, accomplish the following:

(a) Install inspection openings in the outer wing panels and inspect the wing outer panel internal structural components for corrosion in accordance with the PROCEDURE section of Univair Service Bulletin (SB) No. 29, Revision B, dated January 2, 1995. Prior to further flight, repair any corroded wing outer panel internal structural component in accordance with the instructions contained in the above-referenced service information.

Note 2: Complying with the original version of Univair SB No. 29, dated January 27, 1994, or Univair SB No. 29, Revision A, dated June 7, 1994, is considered equivalent to the requirements of paragraph (a) of this AD, and is considered ''unless already accomplished'' for that portion of the AD.

(b) Send the results of the inspection required by paragraph (a) of this AD to the Manager, Denver Aircraft Certification Office (ACO), 5440 Roslyn Street, suite 133, Denver, Colorado 80216. State whether corrosion was found, the location and extent of any corrosion found, and the total hours time-in-service of the component at the time the corrosion was found. (Reporting approved by the Office of Management and Budget under OMB no. 2120–0056.)

(c) Special flight permits may be issued in accordance with sections 21.197 and 21.199 of the Federal Aviation Regulations (14 CFR 21.197 and 21.199) to operate the airplane to a location where the requirements of this AD can be accomplished.

(d) An alternative method of compliance or adjustment of the compliance time that provides an equivalent level of safety may be approved by the Manager, Denver ACO, 5440 Roslyn Street, suite 133, Denver, Colorado 80216. The request shall be forwarded through an appropriate FAA Maintenance Inspector, who may add comments and then send it to the Manager, Denver ACO.

Note 3: Information concerning the existence of approved alternative methods of compliance with this AD, if any, may be obtained from the Denver ACO.

(e) The inspection and installation required by this AD shall be done in accordance with Univair Service Bulletin No. 29, Revision B, dated January 2, 1995. This incorporation by reference was approved by the Director of the Federal Register in accordance with 5 U.S.C. 552(a) and 1 CFR part 51. Copies may be obtained from the Univair Aircraft Corporation, 2500 Himalaya Road, Aurora, Colorado 80011. Copies may be inspected at the FAA, Central Region, Office of the Assistant Chief Counsel, Room 1558, 601 E. 12th Street, Kansas City, Missouri, or at the Office of the Federal Register, 800 North Capitol Street, NW., suite 700, Washington, DC.

(f) This amendment (39–9173) revises AD 94–18–04, Amendment 39–9017.

(g) This amendment (39–9173) becomes effective on March 24, 1995.

Issued in Kansas City, Missouri, on March 6, 1995.

Barry D. Clements,

Manager, Small Airplane Directorate, Aircraft Certification Service.

[FR Doc. 95–6058 Filed 3–13–95; 8:45 am]

BILLING CODE 4910–13–U

14 CFR Part 71

[Airspace Docket No. 94–ASO–25]

Establishment of Class E Airspace; Hampton, GA

AGENCY: Federal Aviation Administration (FAA), DOT.

ACTION: Final rule.

SUMMARY: This amendment establishes Class E airspace at Hampton, GA. A GPS RWY 24 Standard Instrument Approach Procedure (SIAP) has been developed for Clayton County-Tara Field. Controlled airspace extending upward from 700 feet above the surface (AGL) is needed to accommodate this SIAP and for instrument flight rules (IFR) operations at the airport. The operating status of the airport will change from VFR to include IFR operations concurrent with publication of the SIAP.

EFFECTIVE DATE: 0901 UTC, May 25, 1995.

FOR FURTHER INFORMATION CONTACT: Michael J. Powderly, System Management Branch, Air Traffic Division, Federal Aviation Administration, P.O. Box 20636, Atlanta, Georgia 30320; telephone (404) 305–5570.

SUPPLEMENTARY INFORMATION:

History

On January 4, 1995, the FAA proposed to amend part 71 of the Federal Aviation Regulations (14 CFR part 71) by establishing Class E airspace at Hampton GA (60 FR 396). This action would provide adequate Class E airspace for IFR operations at Clayton County-Tara Field.

Interested parties were invited to participate in this rulemaking proceeding by submitting written comments on the proposal to the FAA. No comments objecting to the proposal were received. Designations for Class E airspace extending upward from 700 feet or more above the surface are published in Paragraph 6005 of FAA Order 7400.9B dated July 18, 1994, and effective September 16, 1994. The Class E airspace designation listed in this document will be published subsequently in the Order.

The Rule

This amendment to part 71 of the Federal Aviation Regulations (14 CFR part 71) establishes Class E airspace at Hampton, GA, to accommodate a GPS RWY 24 SIAP and contain IFR operations at Clayton County-Tara Field. The operating status of the airport will be changed from VFR to include

IFR operations concurrent with publication of the SIAP.

The FAA has determined that this regulation only involves an established body of technical regulations for which frequent and routine amendments are necessary to keep them operationally current. It, therefore, (1) is not a ''significant regulatory action'' under Executive Order 12866; (2) is not a ''significant rule'' under DOT Regulatory Policies and Procedures (44 FR 11034; February 26, 1979); and (3) does not warrant preparation of a regulatory evaluation as the anticipated impact is so minimal. Since this is a routine matter that will only affect air traffic procedures and air navigation, it is certified that this rule will not have a significant economic impact on a substantial number of small entities under the criteria of the Regulatory Flexibility Act.

List of Subjects in 14 CFR Part 71

Airspace, Incorporation by reference, Navigation (air).

Adoption of the Amendment

In consideration of the foregoing, the Federal Aviation Administration amends 14 CFR part 71 as follows:

PART 71—[AMENDED]

1. The authority citation for 14 CFR part 71 continues to read as follows:

Authority: 49 U.S.C. app. 1348(a), 1354(a), 1510; EO 10854, 24 FR 9565, 3 CFR, 1959–1963 Comp., 389; 49 U.S.C. 106(g); 14 CFR 11.69.

§ 71.1 [Amended]

2. The incorporation by reference in 14 CFR 71.1. of Federal Aviation Administration Order 7400.9B, Airspace Designations and Reporting Points, dated July 18, 1994, and effective September 16, 1994, is amended as follows:

Paragraph 6005 Class E Airspace Areas Extending Upward From 700 Feet Above the Surface of the Earth.

* * * * *

ASO GA E5 Hampton, GA [New]

Clayton County—Tara Field, GA
(Lat. 33°23′21″ N, long. 84°19′57″ W)

That airspace extending upward from 700 feet above the surface within a 6.8 mile radius of Clayton County-Tara Field; excluding that airspace within the Atlanta, GA, Peachtree City, GA, and Griffin, GA Class E airspace areas.

* * * * *

Issued in College Park, Georgia, on March 1, 1995.

Walter E. Denley,

Acting Manager, Air Traffic Division, Southern Region.

[FR Doc. 95–6277 Filed 3–13–95; 8:45 am]

BILLING CODE 4910–13–M

---

14 CFR Part 91

[Docket No. 28134]

Policy on Use of Interchange Agreements for Noise Compliance

AGENCY: Federal Aviation Administration, DOT.

ACTION: Policy statement.

SUMMARY: This document sets forth a statement of Federal Aviation Administration (FAA) policy concerning the use of airplane sharing agreements to accomplish compliance with the Stage 3 noise transition regulations. As a result of its experience during the first interim compliance date, the FAA has become aware of a noise compliance concern involving such agreements. This policy statement is intended to provide operators that participate in airplane sharing agreements with notice and guidance on how the FAA will view such agreements for compliance with the Stage 3 transition regulations.

DATES: This policy is effective on March 14, 1995.

Comments concerning this policy must be received on or before September 11, 1995.

ADDRESSES: Send comments on this notice to: Federal Aviation Administration (FAA), Office of the Chief Counsel, Attn: Rules Docket, AGC–200, Docket No. 28134, 800 Independence Avenue SW., Washington, DC 20591.

Comments may be examined or delivered in person at the above address in room 916G, weekdays between 8:30 a.m. and 5 p.m., except Federal holidays.

FOR FURTHER INFORMATION CONTACT: Mr. William W. Albee, Policy and Regulatory Division (AEE–300), Office of Environment and Energy, Federal Aviation Administration, 800 Independence Avenue, SW., Washington, DC 20591; telephone (202) 267–3553, facsimile (202) 267–5594.

SUPPLEMENTARY INFORMATION: Sections 91.865 and 91.867 of 14 CFR each required that as of December 31, 1994, an operator of Stage 2 airplanes either reduce the number of Stage 2 airplanes it operates by 25% from its base level, achieve a fleet mix of airplanes that is 55% Stage 3 airplanes, or in the case of a new entrant, achieve a fleet mix that is 25% Stage 3 airplanes. These same regulations require that, after the next interim compliance date, December 31, 1996, each operator must either reduce the number of Stage 2 airplanes it operates by 50% from its base level or achieve a fleet mix that is 65% Stage 3 airplanes (or, 50% for new entrants). The FAA's experience with the first interim compliance date has raised a serious concern involving airplane interchange agreements and other arrangements that result in an individual airplane being enumerated on the operations specifications of more than one operator. To ensure that the objectives of the 1990 Airport Noise and Capacity Act and the implementing regulations are not compromised during the interim compliance period, to ensure that the benefits are fully realized, and to prevent foreseeable future difficulties in compliance, the FAA is formally stating its policy for the manner in which Stage 3 airplanes are ''counted'' for compliance purposes.

Recent analysis of operators' compliance reports for 1994, which are required under 14 CFR 91.875, has revealed that some operators appear to have entered into Stage 3 airplane sharing agreements solely or primarily for the purpose of achieving compliance with the first interim compliance deadline of the Stage 3 transition rules, December 31, 1994. These airplane sharing agreements take several forms, including formal interchange agreements between operators and instances of two or more operators leasing the same airplane from a lessor. This results in the same Stage 3 airplane being counted for compliance by two or more operators, depending on the sharing arrangement. The FAA views this result to directly contradict the intent and objectives the Airport Noise and Capacity Act and its implementing regulations.

Under such arrangements, a single Stage 3 airplane could be used to support the presence of an almost limitless number of Stage 2 airplanes. Allowing a proliferation of such sharing arrangements for the purpose of noise rule compliance can be expected to result in the delay of Stage 2 airplane retirement or modification by the participating operators. Such delays not only reduce the anticipated benefits of the Congressionally mandated interim compliance period, but have the more insidious effect of operators further delaying the business and financial decisions and actions necessary to achieve full compliance by 1999. If these paper-only compliance situations

are allowed to continue, the FAA foresees that the underlying delays and failures to plan and implement real compliance may easily result in an unacceptable level of actual compliance and a large number of waiver applications based on arguments of financial hardship, and airplane and hushkit unavailability as participating operators are forced into complete compliance at the last minute.

Accordingly, the FAA is formally notifying operators of its policy that an individual Stage 3 airplane may be counted only in the fleet of one operator for purposes of compliance with the Stage 3 transition rules, regardless of the number of operators participating in the use of the airplane. This single counting does not affect the actual use of airplanes under interchange agreements; they may simply only be counted in the fleet of one of the participating operators for noise compliance purposes.

Policy Statement

For the purpose of compliance with §§ 91.865 or 91.867, the FAA will not count an individual Stage 3 airplane in the fleet of more than one operator.

This policy statement does not effect any operator's compliance with the December 31, 1994, compliance date. Thus, if an operator used shared airplanes to achieve compliance in 1994, that compliance is considered valid until December 31, 1996.

After the effective date of this policy, however, an operator may not use any type of airplane sharing agreement, regardless of the date of the agreement, to increase the number of Stage 2 airplanes it operates. As an example, a new entrant's fleet consists of three Stage 2 airplanes, and two Stage 3 airplanes that are also on the operations specifications of another operator. For purposes of the December 31, 1994, compliance date, that new entrant will be considered in compliance. However, that new entrant operator may *not* use the presence of the two shared Stage 3 airplanes to support the addition of three more Stage 2 airplanes to its fleet after the date of this policy statement, even though, with the addition, it would ''remain'' in compliance with § 91.867 by maintaining a fleet that is 25% Stage 3 airplanes. The FAA will not allow the presence of ''shared'' Stage 3 airplanes act as support for additional Stage 3 airplanes after the effective date of this policy.

The above example presumes that the new entrant attempting to add Stage 2 airplanes is not the operator that is claiming the Stage 3 airplane as its own. If the FAA finds a Stage 3 airplane that is reported in the fleet of more than one operator, the FAA will not count it in the fleet of any of the reporting operators for noise compliance purposes until the airplane is declared by one of the operators as belonging in its fleet alone. The FAA will not mitigate disputes between operators involved in any airplane sharing agreement. The FAA presumes that the operators involved in a shared airplane agreement will reach their own agreement on which operator gets to count the airplane for compliance purposes. While the FAA anticipates that in most cases the reporting operator will be the owner of lessor under an interchange agreement, any agreement between the sharing operators that results in one operator counting the airplanes is acceptable to the FAA.

Most importantly, for purposes of the December 31, 1996, interim compliance deadline, no shared airplanes will be allowed to count in the fleet of more than one operator, regardless of the date of the sharing agreement, and regardless of whether the shared arrangement was found valid for compliance with the 1994 compliance date. Thus, operators that achieved compliance with the 1994 compliance date by means of shared Stage 3 airplanes are under notice that the continuation of the same arrangement or any new arrangement will not support compliance in with the December 31, 1996, requirement.

The FAA is formally publishing this policy at this time to give all affected operators the maximum amount of time to achieve compliance with the December 31, 1996 compliance date without the use of shared Stage 3 airplanes. As stated previously, the FAA has only very recently become aware of these arrangements and their use for compliance as the required reports for 1994 have been filed and analyzed, and it is only recently that the FAA has determined the serious negative consequences of allowing such practices to continue. However, the FAA determined that, in the interest of fairness and the lack of a formal written policy before this date, such agreements that were used to comply with the 1994 compliance date would not be disallowed retroactively. This policy statement is intended to prevent the further use of such agreements for noise compliance manipulation and preclude the proliferation of such agreements as the perceived ''benefit'' is realized.

Shared Stage 2 Airplanes

The FAA is also aware that there are existing sharing agreements for Stage 2 airplanes that result in Stage 2 airplanes being listed on the operations specifications of more than one operator. To further the goals of the ANCA and its implementing regulations, the FAA will continue to count a Stage 2 airplane as part of the fleet of each of the operators sharing it. This is the method used in the compliance calculations for the 1994 compliance date, and will not affect the actual use of any such shared Stage 2 airplane by the participating operators.

Further, if a shared Stage 2 airplane was used to establish base level in the fleet of more than one operator by means of its presence on the operations specifications of the sharing operators during the appropriate period, the establishment of such base level is not affected. If the shared Stage 2 airplane is eliminated from one or all of the fleets of the operators participating in the sharing agreement, that removal may count for compliance purposes for all of the operators that remove it from their operations specifications.

In the event that any operator participating in the sharing of a Stage 2 airplane restricts its operations specifications to preclude the operation of that airplane into the contiguous United States. To achieve compliance, all other participating operators are also precluded from operating that airplane in the contiguous United States.

These policies concerning Stage 2 and Stage 3 airplanes apply to all operators of aircraft affected by the Stage 3 transition regulations, regardless of whether the operators are U.S. or non-U.S., and regardless of the level of formality of the agreement under which the subject airplanes are shared.

Comments concerning the effect of this policy on individual operators and their compliance with the Stage 3 transition regulations should be submitted to the docket established for this policy statement; the FAA will consider all comments received and refine the policy if warranted. Operators that have individual questions concerning the effect of this policy on their operations and compliance may submit written inquiries to the individual listed in the **FOR FURTHER INFORMATION CONTACT** paragraph above.

Issued in Washington, DC on March 9, 1995.

Paul R. Dykeman,

Acting Director of Environment and Energy.

[FR Doc. 95–6224 Filed 3–13–95; 8:45 am]

BILLING CODE 4910–13–M

Coast Guard

33 CFR Part 117

[CGD05–94–008]

RIN 2115–AE47

Drawbridge Operation Regulations; Spa Creek, MD

AGENCY: Coast Guard, DOT.

ACTION: Final rule.

SUMMARY: The Coast Guard is adopting as final the interim rule published in the **Federal Register** on August 29, 1994, changing the regulations governing the SR 181 bridge over Spa Creek, mile 0.4, in Annapolis, Maryland, by restricting the number of bridge openings during the boating season between the hours of 7:30 p.m. to 7:30 a.m. This is intended to provide for regularly scheduled drawbridge openings to help reduce motor vehicle traffic delays and congestion on the roads and highways linked by this drawbridge.

EFFECTIVE DATE: This rule is effective on April 13, 1995.

FOR FURTHER INFORMATION CONTACT: Ann B. Deaton, Bridge Administrator, Fifth Coast Guard District, at (804) 398–6222.

SUPPLEMENTARY INFORMATION: Drafting Information: The drafters of this notice are Linda L. Gilliam, Project Officer, and LCDR Christopher A. Abel, Project Attorney, Fifth Coast Guard District.

Regulatory History

On August 29, 1994, the Coast Guard published an interim final rule with request for comments entitled Spa Creek, Maryland, in the **Federal Register** (59 FR 44315). The comment period ended October 28, 1994. The Coast Guard received no comments on the interim final rule.

Background and Purpose

The Maryland Department of Transportation requested further regulation of the drawbridge across Spa Creek, mile 0.4, at Annapolis, Maryland, during the evening hours during the boating season. The Coast Guard is restricting the number of openings for the passage of vessels from May 1 to October 31 from 7:30 p.m. to 7:30 a.m., Monday through Friday, except Federal holidays.

The previous regulation published in the **Federal Register** (55 FR 4604) on February 9, 1990, stated that the draw shall open on signal for the passage of vessel traffic from May 1 to October 31 from 7:30 p.m. to 7:30 a.m., Monday through Friday, except Federal holidays. Public Notice 5–709 issued March 7, 1990, incorrectly stated that from May 1 to October 31 from 7:30 p.m. to 7:30 a.m. the draw would open for vessel traffic on the hour and half-hour. The State Highway Administration, Maryland Department of Transportation, has been operating the draw according to the schedule published in this public notice since early 1990.

They wish to continue operating the bridge on the hour and half-hourly schedule from 7:30 p.m. to 7:30 a.m. published in the public notice, as opposed to the ''open on signal'' schedule published in the Federal regulation. The Coast Guard has not received any complaints from the boating community, and the operating schedule has been posted on the bridge.

Regulatory Evaluation

This rule is not a significant regulatory action under section 3(f) of Executive Order 12866 and does not require an assessment of potential costs and benefits under section 6(a)(3) of that order. It has been exempted from review by the Office of Management and Budget under that order. It is not significant under the regulatory policies and procedures of the Department of Transportation (DOT) (44 FR 11040; February 26, 1979). The Coast Guard expects the economic impact of this rule to be so minimal that a full Regulatory Evaluation under paragraph 10e of the regulatory policies and procedures of DOT is unnecessary.

Small Entities

Under the Regulatory Flexibility Act (5 U.S.C. 601 et seq.), the U.S. Coast Guard must consider the economic impact on small entities of a rule for which a general notice of proposed rulemaking is required. ''Small entities'' include independently owned and operated small businesses that are not dominant in their field and that otherwise qualify as ''small business concerns'' under section 3 of the Small Business Act (15 U.S.C. 632). This rule does not require a general notice of proposed rulemaking and, therefore, is exempt from the regulatory flexibility requirements. Although exempt, the Coast Guard has reviewed this rule for potential impact on small entities.

Because it expects the impact of this rule to be minimal, the Coast Guard certifies under 5 U.S.C. 605(b) that this rule will not have a significant economic impact on a substantial number of small entities.

Collection of Information

This rule contains no collection of information requirements under the Paperwork Reduction Act (44 U.S.C. 3501 et seq.).

Federalism Assessment

This action has been analyzed in accordance with the principles and criteria contained in Executive Order 12612, and it has been determined that this rule will not have sufficient federalism implications to warrant preparation of a Federalism Assessment.

Environment

The Coast Guard considered the environmental impact of this rule and concluded that under section 2.B.2.e.(32)(e) of Commandant Instruction M16475.1B, this rule is categorically excluded from further environmental documentation. A Categorical Exclusion Determination statement and checklist has been prepared and placed in the rulemaking docket.

List of Subjects in 33 CFR Part 117

Bridges.

Regulations

Accordingly, the interim rule amending 33 CFR part 117 which was published at 59 FR 44315 on August 29, 1994, is adopted as a final rule without change.

Dated: January 20, 1995.

M.K. Cain,

Captain, U.S. Coast Guard, Commander, Fifth Coast Guard District, Acting.

[FR Doc. 95–6153 Filed 3–13–95; 8:45 am]

BILLING CODE 4910–14–M

DEPARTMENT OF THE INTERIOR

National Park Service

36 CFR Part 7

RIN 1024–AC20

Grand Teton National Park, WY; Mountain Climbing and Winter Backcountry Trip Regulations

AGENCY: National Park Service, Interior.

ACTION: Final rule.

SUMMARY: The National Park Service (NPS) is eliminating registration and check out requirements for climbing and off trail travel above 7,000 ft., and for winter travel in Grand Teton National Park. Existing regulations requiring climbers, off trail hikers, and winter travel users to register and check out upon completion of their activity were intended primarily to provide information necessary to initiate search and rescue responses. Actual experience over the years has shown that the

intended purpose of these regulations has not been achieved. Nearly all search and rescue responses are generated by reports from sources other than the check out system. Instead of aiding rescuers, these regulations burden park rangers with the task of checking on countless cases of climbers and backpackers who failed to check out. These regulations have been enforced selectively for several years, where local climbers and guides have not been forced to register because of an assumed expertise and knowledge of the local area. The deletion of these regulations will not eliminate visitor protection services provided by park personnel.

EFFECTIVE DATE: The final rule becomes effective April 13, 1995.

ADDRESSES: Comments should be addressed to: Superintendent, Grand Teton National Park, P.O. Drawer 170, Moose, WY 83012.

FOR FURTHER INFORMATION CONTACT: Colin W. Campbell, Law Enforcement Specialist, Grand Teton National Park, Telephone: 307–733–2880.

SUPPLEMENTARY INFORMATION:

Background

The existing National Park Service (NPS) special regulations that pertain to mountain climbing, off trail travel, and winter travel trips in Grand Teton National Park are codified at 36 CFR 7.22 (f) and (g). They require all technical climbers, off trail travel, and winter travel users to register or check in prior to undertaking these activities and to check out with a ranger upon completion of the activity. The original intent was primarily to provide park search and rescue personnel with the knowledge that a park user was in essence overdue from a potentially dangerous activity. In reality, almost all perceived overdue parties concerned climbers and backcountry users failing to properly check out. In addition, the vast majority of winter travelers either ignore or do not know of the requirement to register, and strict enforcement of this regulation has not been done for several years. The result has been a combination of non-compliance, failure to check out, failure to contact a ranger in a timely manner and wasted time and energy on the part of the park staff administering the system. After working with these restrictions since promulgation it has been determined that they are not achieving their original purpose of saving lives by alerting search and rescue personnel. In reality, almost all park search and rescue efforts are the result of initial reports by climbing partners, other park backcountry users, friends or relatives.

The NPS believes the deletion of these rules will make the management of mountain climbing and winter backcountry trips more consistent with the practices of both State and Federal agencies whose lands are contiguous with Grand Teton National Park. Overnight backcountry trips will continue to be regulated by general camping regulations at 36 CFR 2.10.

A voluntary registration system will be available to climbers and backcountry travelers who choose to use it. The exchange of information between climbers, off-trail hikers, winter travelers and park rangers will still be available and encouraged without mandating it through regulation. Furthermore, the park staff will be educating park users to leave trip information with family or friends, shifting responsibility for trip planning onto the park user.

A proposed rule was published May 13, 1994 in the **Federal Register** (59 FR 25001). In addition to the **Federal Register**, a press release concerning the proposed change was released in the Jackson, Wyoming area, as well as local climbing shops and guides being notified of the proposed change. No responses were received during the following 30-day public review and comment period. Consequently, the rule promulgated here is the same as the one proposed.

Public Participation

The policy of the National Park Service is, whenever practicable, to afford the public an opportunity to participate in the rulemaking process. Accordingly, interested persons may submit written comments regarding this final rule to the address noted at the beginning of this rulemaking. Grand Teton National Park staff will also be making public notices in local papers and contacting representatives of the local climbing community.

Drafting Information: The primary authors of this proposed rule are Colin W. Campbell, Law Enforcement Specialist and Mark L. Magnuson, Jenny Lake Sub-District Ranger.

Paperwork Reduction Act

This rulemaking does not contain information collection requirements that require approval by the Office of Management and Budget under 44 U.S.C. 3501 *et seq.*

Compliance With Other Laws

The Department of the Interior has determined that this document will not have a significant economic effect on a substantial number of small entities under the Regulatory Flexibility Act (5 U.S.C. 601 *et. seq.*), because it deletes an existing requirement and gives more discretion to the park visitor.

The NPS has determined that this proposed rulemaking will not have a significant effect on the quality of the human environment, health and safety because it is not expected to;

(a) Increase public use to the extent of compromising the nature and character of the area causing physical damage to it:

(b) Introduce noncompatible uses which might compromise the nature and characteristics of the area, or cause physical damage to it;

(c) Conflict with adjacent ownerships or land uses; or

(d) Cause a nuisance to adjacent owners or occupants.

Based on this determination, this rulemaking is categorically excluded from the procedural requirements of the National Environmental Policy Act (NEPA) by Departmental Regulations in 516 DM 6, (49 FR 21438). As such, neither an Environmental Assessment nor an Environmental Impact Statement has been prepared.

This rule was not subject to Office of Management and Budget review under Executive Order 12866.

List of Subjects in 36 CFR Part 7

National parks.

In consideration of the foregoing, 36 CFR Chapter I is amended as follows:

PART 7—SPECIAL REGULATIONS, AREAS OF THE NATIONAL PARK SYSTEM

1. The authority citation for part 7 continues to read as follows:

Authority: 16 U.S.C. 1, 3, 9a, 460(q), 462(k); Sec. 7.96 also issued under D.C. Code 8–137 (1981) and D.C. Code 40–721 (1981).

2. In § 7.22, paragraphs (f) and (g) are removed, and paragraphs (h) and (i) are redesignated paragraphs (f) and (g) respectively.

Dated: January 24, 1995.

George T. Frampton, Jr.,

Assistant Secretary for Fish and Wildlife and Parks.

[FR Doc. 95–6241 Filed 3–13–95; 8:45 am]

BILLING CODE 4310–70–P

ENVIRONMENTAL PROTECTION AGENCY

40 CFR Part 52

[IL63–3–6803; FRL–5170–5]

Approval and Promulgation of Implementation Plan; State of Illinois

AGENCY: Environmental Protection Agency.

ACTION: Final rule.

SUMMARY: On September 13, 1994, the United States Environmental Protection Agency (USEPA) published direct final rulemaking approving 1990 base year ozone precursor emissions inventories for the Chicago, Metro-East St. Louis, and Jersey County, Illinois ozone nonattainment areas as a revision to the Illinois State Implementation Plan (SIP). On the same day, a proposed rule was also published which established a 30-day public comment period, noting that, if adverse comments were received regarding the direct final rule, the USEPA would withdraw the direct final rule and publish an additional final rule to address the public comments. Adverse comments were received during the public comment period. This revised final rule summarizes the public comments and USEPA's responses and finalizes the approval of the 1990 base year ozone precursor emissions inventories for the Illinois ozone nonattainment areas.

EFFECTIVE DATE: This action will be effective April 13, 1995.

ADDRESSES: Copies of the SIP revision, public comments and USEPA's responses are available for inspection at the following address: (It is recommended that you telephone Edward Doty at (312) 886–6057 before visiting the Region 5 office.)

United States Environmental Protection Agency, Region 5, Air and Radiation Division, 77 West Jackson Boulevard, Chicago, Illinois 60604.

FOR FURTHER INFORMATION CONTACT: Edward Doty, Regulation Development Section (AR–18J), Regulation Development Branch, Air and Radiation Division, United States Environmental Protection Agency, Region 5, 77 West Jackson Boulevard, Chicago, Illinois 60604, Telephone Number (312) 886–6057.

SUPPLEMENTARY INFORMATION:

I. Background Information

The 1990 base year emissions inventories discussed in this rule were submitted by the Illinois Environmental Protection Agency (IEPA) on November 12, 1993 in compliance with the requirements of section 182(a)(1) of the Clean Air Act (Act). The emission inventory submittal covers the emissions of Volatile Organic Compounds (VOC), Oxides of Nitrogen (NO_x), and Carbon Monoxide (CO) for the following ozone nonattainment areas: Chicago (Cook, DuPage, Kane, Lake, McHenry, and Will Counties, Aux Sable and Goose Lake Townships in Grundy County, and Oswego Township in Kendall County); Metro-East St. Louis (Madison, Monroe, and St. Clair Counties); and Jersey County. In addition to emissions from the nonattainment areas, the submittal also covers VOC, NO_x, and CO emissions from major stationary sources located within 25 miles of the ozone nonattainment areas. The focus of this rulemaking is the ozone precursor emissions in the ozone nonattainment areas.

On September 13, 1994 (59 FR 46920), USEPA published a direct final rule approving the emissions inventories as a revision of the Illinois ozone SIP. On the same day, USEPA published a proposed rule (59 FR 46948) noting that if adverse comments were received regarding the direct final rule, the USEPA would withdraw the direct final and publish another final rule addressing the public comments. Adverse comments were received regarding the direct final rule. This subsequent final rule addresses the adverse comments and announces USEPA's final action regarding Illinois' base year ozone precursor emission inventories.

II. Public Comments

The following discussion summarizes the comments received regarding the emissions inventories and the USEPA responses to those comments. All comments were included in a single set of comments submitted jointly by the American Lung Association of Metropolitan Chicago and the Citizens Commission for Clean Air in the Lake Michigan Basin.

Comment: The commenters note that air quality monitoring and modeling performed by the Lake Michigan Air Directors Consortium (LADCO) indicates that the Chicago area emissions inventory underestimates VOC emissions by as much as 1.5 times and overestimates NO_x emissions. VOC speciation profiles indicate that the inventory is underestimating mobile and/or area source emissions.

The commenters point out that the accuracy of the emissions inventory is critical since it is difficult to solve an ozone attainment problem when the source of the problem is not understood. Errors in the emissions inventory could lead to errors in the calculated emission reduction requirement (both in total and by source category) and the efficacy of the VOC versus NO_x controls, all of which are important issues in the Lake Michigan Basin.

The commenters note that monitoring data contradicting emission inventories is not unique to northeastern Illinois, suggesting that there may be a fundamental flaw in the process recommended by the USEPA for developing emission inventories. The commenters state that the USEPA should act to resolve these problems immediately. Furthermore, the inventories should be adjusted to be consistent with convincing monitoring data like those collected by LADCO.

Response: The USEPA is aware of the monitoring data collected during the Lake Michigan Ozone Study (LMOS) and their implications regarding the emissions inventory. The data imply that VOC emissions in the LMOS domain, and particularly in the Chicago and Milwaukee ozone nonattainment areas, are underestimated or that NO_x emissions are overestimated. It is noted, however, that these monitoring data are not sufficient in quantity and detail to allow detailed, source category-specific corrections to the emissions inventory. The data imply that the States and the USEPA should continue to pursue improved emission inventory techniques.

It is further noted that the LMOS States (Illinois, Indiana, Michigan, and Wisconsin) have pursued improvements in the emissions inventories subsequent to the submittal of the 1990 base year emissions inventories. These emissions inventory improvements have led to significantly improved agreement with the monitoring data collected during the LMOS. The emissions data to be used in the Lake Michigan Ozone Control Program (LMOP) (the modeling analysis conducted to select emission control measures, to assess the merits of VOC versus NO_x controls, and to demonstrate attainment of the ozone standard in the LMOS/LMOP modeling domain) agree favorably with the monitoring data. Some changes in the base year emissions inventories are expected to result from this process. These changes will be assessed by the USEPA when the demonstrations of attainment are submitted. If significant changes in the base year emissions inventories are implied by the modeling input data, the USEPA may consider requesting the States to revise the base year emission inventories approved previously by the USEPA. Alternatively, with concurrence from the State, the USEPA may

rulemake to revise the approved base year emissions inventories at the same time that the USEPA acts on the demonstration of attainment.

Because the State followed USEPA guidelines in preparing the emission inventories covered in this rulemaking, the USEPA does not believe it is appropriate to disapprove the base year emissions inventories at this time. Such a disapproval would not be adequately supported by the monitoring data collected during the LMOS.

Comment: LADCO monitoring and speciation data indicate that mobile source emissions are underestimated in the Chicago area emissions inventory. A contributing factor may be inaccurate speed data. In comments addressing the conformity findings for the 1993–1997 and 1994–1998 Transportation Improvement Programs and Transportation System Development Plans, a number of organizations identified problems with the Chicago Area Transit Study (CATS) transportation model that could lead to inaccurate speed estimates. The problems identified were:

1. The speeds used to estimate mobile source emissions are not based on actual measurements but instead are a function of applicable speed limits, numbers of traffic lights, type of road, etc. With little or no empirical data to support the speed estimates, they are highly suspect.
2. In order to generate accurate speeds, the model should post-process link speeds.
3. The model should account for intersection delays.

These problems are likely to lead to underestimation of emissions.

Other model deficiencies may have skewed speeds in a manner that resulted in overestimation of emissions or had no effect on emissions. For example, the model should feed trip times back to the mode choice and trip distribution portions of the model to account for persons who choose a different mode or avoid congested areas. The model should also have separate peak and non-peak components that account for drivers taking trips during less congested hours of the day, instead of the fixed time-of-day factors that the model currently uses.

The above problems should be remedied before USEPA gives final approval to the emissions inventory.

Response: It is true that the link speeds given in the transportation model output are not actual measured speeds, but rather ''impedances'' with the dimensions of speed that are used to make the model's estimated traffic levels balance. Both the IEPA and CATS subjected the CATS network speed (impedance) data, used in the development of the 1990 base year mobile source emission estimates, to considerable scrutiny before they were used in the estimation of emissions. It was determined that the model speed data were representative and could be properly used ''as is.''

As described in the emissions inventory documentation, the IEPA checked the model link speeds by road type and found them to be reasonable and representative. In particular, model speeds were checked by road type under free and congested conditions. Model speeds were, in general, less under congested conditions than under free flow conditions; and average speeds for different road types differed as expected. Local streets had the lowest average speeds, typically in the 20 to 35 mile per hour range, while rural interstates had the highest average speeds, up to 65 miles per hour. Speeds on very congested streets were below 10 miles per hour, as would be expected during ''rush hour'' periods. Model speeds for most roads, except interstates and freeways, were in the 25 to 45 mile per hour range. The model speeds for each roadway type agree broadly with speeds observed on roads of that type both in Chicago and elsewhere. It should be noted that the transportation model used by CATS takes intersection delays into account.

With regard to the comments concerning the overestimation of emissions, CATS has recently introduced a modeling method of feeding trip times back into the mode choice and trip distribution parts of the transportation model. In addition, CATS has introduced the use of peak and off-peak modeling components. These new model features have had a negligible effect on the model output.

Comment: Accurate emissions are missing for the following source categories:

1. Publicly Owned Treatment Works (POTWs);
2. Hazardous Waste Landfills;
3. Municipal Landfills;
4. Leaking Underground Storage Tanks (LUSTs);
5. Lawn Care Pesticide Applications;
6. Agricultural Burning;
7. Catastrophic/Accidental Releases;
8. Waste Disposal Incinerators; and
9. Small (10 to 25 tons per year) VOC-emitting Facilities.

Response: Each of the source categories are individually responded to below:

Publicly-Owned Treatment Works

The Publicly-Owned Treatment Works (POTW) category was treated by the IEPA as a point source category and not as an area source category in the Chicago ozone nonattainment area. A total of 62 POTW facilities were addressed in the Chicago nonattainment point source inventory.

The IEPA estimates were primarily based on data obtained from the IEPA's Division of Water Pollution Control, which issues permits to all POTW facilities. The permit files contain facility-specific data including, but not limited to, a facility's monthly average flowrates and the location of the facility. Other information not obtained from the permit files, such as industrial wastewater contribution, were either directly solicited from the facilities themselves or were given a default value consistent with the recommendations of the USEPA based on the guidelines contained in Procedures for the Preparation of Emission Inventories for Precursors of Ozone, Volume I (EPA–450/4–88–021). The emissions inventory documentation submitted by the IEPA contained a detailed discussion of IEPA's emission estimation methodology for this source category.

Hazardous Waste Landfills and Municipal Landfills

The Chicago ozone nonattainment area emissions inventory includes emissions for landfills within the point source emissions inventory rather than as an area source category. The IEPA used information from the IEPA Division of Land Pollution Control to determine the size, type, age, and location of landfills in the Chicago nonattainment area. In cases where some of the information was missing, estimates were based on the best available information. The emissions inventory contains emissions estimates for 229 landfills with a total of 4.59 tons per day of VOC emissions.

Calculation of landfill emissions was based on the 1988 document, *Air Emissions from Municipal Solid Waste Landfills—Background Information for Proposed Standards and Guidelines.* An emission factor of 35.36 tons VOC per year per million tons of refuse was used in the emission estimations. This was based on a recommended emission factor of 13.6 tons VOC per year per million tons of refuse multiplied by 2.6 to account for the fact that the Chicago area receives more than 23 inches of precipitation per year.

Catastrophic/Accidental Releases and Leaking Underground Storage Tanks

Catastrophic/accidental releases were not included in the Chicago nonattainment area inventory due to the

lack of USEPA emission inventory guidance for this source category and the lack of available data. In addition, note that the USEPA guidance requires that the emissions be estimated for a typical ozone season weekday. Since such releases are random and the extent of emissions can not be calculated, the IEPA, with concurrence from the USEPA, did not include emissions from this category in the emissions inventory.

There is a similar lack of information regarding VOC emissions from Leaking Underground Storage Tanks (LUSTs). Although information on the location of LUST cleanups is available, quantifying the VOC emissions resulting from the leaks and from the cleanup operations is complicated by the lack of information on the amount of gasoline or other volatile materials released, the amount of material that has reached the water table, and the amount of material that has been trapped in the soil. The USEPA concurs with the omission of these emissions given the lack of data.

Lawn Care Pesticide Applications

The IEPA did not calculate these emissions due to a lack of available USEPA guidance for this source and to a lack of available data. In addition, the IEPA believes that such emissions are already accounted for under the household pesticide subcategory of the commercial/consumer solvents category. The USEPA concurs with the omission of these emissions given the lack of data and guidance.

Agricultural Burning

Agricultural burning was not considered to be significant summertime source of VOC emissions in the Chicago ozone nonattainment area since such burning occurs primarily outside of the summer months. The Chicago nonattainment area does contain VOC emissions resulting from forest fires as well as from burning of landscape waste under the open burning category.

Waste Disposal Incinerators

The Chicago nonattainment area emissions inventory includes VOC emissions from waste disposal incinerators. The summary of these emissions can be found in Table 2–2 of the Chicago area emissions inventory submittal under the category, Municipal Waste: Combustion. This category summarizes the point source inventory for Commercial/Institutional, Governmental, and Industrial Waste Incineration. There are a total of 121 source facilities in this category, emitting a total of 1.62 tons VOM per day.

Small (10 to 25 Tons Per Year) VOC-Emitting Facilities

The Chicago nonattainment area point source emissions inventory includes emissions from small facilities emitting less than 25 tons VOC per year. All permitted emission sources were included in the point source emissions inventory regardless of their size. The emissions inventory includes source facilities with emissions as low as 0.01 tons per day or 0.1 pounds per hour. Although these facilities were not individually documented in the major source summary documentation of the emissions inventory submittal, their emissions were totalled in the appropriate activity-related source categories.

Comment: An area of concern is the lack of rule effectiveness factors for many source categories in the emission inventories. For sources that do have rule effectiveness estimates, there is little information explaining how the estimates were selected.

Response: As noted in the emission inventory documentation, the State assumed a default rule effectiveness of 80 percent for most source categories, as recommended in USEPA guidelines. A rule effectiveness of 100 percent was used for sources that estimated emissions using direct measurement methodologies, such as mass balance. These procedures comply with Illinois' Inventory Preparation Plan, previously approved by the USEPA.

The State, as part of the LMOS, determined facility-specific rule effectiveness levels for major facilities with emission control efficiencies in excess of 95 percent. All non-studied facilities with emission control efficiencies in excess of 95 percent were assumed to have rule effectiveness levels equal to the median rule effectiveness determined in the facility-specific study, approximately 92 percent. The study parameters and results were included in documentation referenced in the emissions inventory submittal. The USEPA has reviewed this documentation, and has determined it to be acceptable. Therefore, the State has taken an acceptable approach to applying rule effectiveness and has adequately documented this approach and the resulting rule effectiveness estimates.

Comment: The use of questionable population-based emissions factors appears to have contributed to low emission estimates for some area sources. For example, estimates of graphic arts, auto body refinishing, and non-road construction equipment VOC emissions are significantly lower per capita than for other urban areas. Given that additional controls on area sources are likely to be included in Illinois' attainment plan, accuracy of the area source emissions is especially important.

Response: With regard to the graphic arts category, USEPA guidelines, as used by the IEPA, recommended the use of population-based per capita emission factors to estimate county total graphic arts emissions. However, since the Illinois point source emissions inventory contains emissions from graphic arts facilities, the IEPA followed USEPA guidelines and subtracted point source emissions for this source category from the calculated area source emissions total. This subtraction is performed to avoid double counting of emissions. If one compares the total of point and area source emissions for this source category on a per capita basis with similar emission rates for other major areas, one would find better agreement. The low area source per capita emission rate is an artifact of the thoroughness of Illinois' point source emissions inventory.

Regarding the automobile refinishing area source category, emissions were not estimated using only a population-based emission factor. The Chicago automobile refinishing area source emission estimates were determined by apportioning national automobile refinishing activity data, such as the amount of coating usage, to the Chicago area on the basis of population. This method was chosen, with the approval and support (through the use of a USEPA contract) of the USEPA, to better quantify the emissions from different operations involved in automobile refinishing and for better estimation of emission reductions resulting from required controls. The method employed would lead to per capita emission rates differing from those in urban areas where a strict per capita emission rate were used. The directionality of the differences does not imply that the technique used by the IEPA is in error.

Regarding emissions from non-road construction equipment, it must be noted that IEPA simply used emission estimates provided by USEPA's Office of Mobile Sources. In 1991, the USEPA issued an emissions inventory for each of the ozone and carbon monoxide nonattainment areas. The IEPA used the emissions inventory provided by the USEPA for the Chicago ozone nonattainment area. Given the detail of the data used and the extent of the quality assurance of this emissions inventory, the IEPA believes, and the USEPA agrees, that no better estimate of

non-road construction equipment emissions is available at this time and that the current emissions estimate is appropriate. It is additionally noted that the emissions inventory submitted by the IEPA incorporated by reference the documentation of the non-road construction equipment emissions estimates supplied by the USEPA.

Comment: The commenters note that the emissions for railroads and airport lack documentation. In addition, the commenters note that, given that a high speed rail and a third airport are both under consideration for the Chicago area, this lack of documentation is especially troublesome.

Response: Discussion of the estimation procedures used for railroad and airport emissions is contained on pages 196 through 221 of the Chicago emissions inventory documentation submitted to the USEPA. The discussion of railroad emissions includes an estimate of statewide railroad fuel usage, which was apportioned to the nonattainment area counties based on the county to State ratios of railroad track mileage. The county fuel usage figures were then multiplied by a per unit fuel usage emission rate factor. This approach is acceptable to the USEPA.

The method used for airport emissions evaluated commercial aircraft activity at O'Hare and Midway Airports on an aircraft engine-specific basis incorporating modal emission rates. The modal emission rate for each engine is a function of the amount of fuel burned for each of the four modes power settings. The four modes are taxi/idle, takeoff, climbout, and approach. Emissions were estimated for approximately 60 different commercial engine types. Emissions from the remaining aircraft categories, military and general aviation, were estimated based on the number of landing and take-off (LTO) cycles of each aircraft type. These LTO cycles were also the basis of the emissions estimates performed for all of the other airports in the Chicago ozone nonattainment area. These estimation procedures were documented in IEPA's emissions inventory submittal and were found to be acceptable by the USEPA.

III. Final Rulemaking Action

The State of Illinois has met the requirements [section 182(a)(1)] of the Act for the submittal of base year ozone precursor emissions inventories. The USEPA approves the State's 1990 base year ozone precursor emission inventories for the Chicago, Metro-East St. Louis, and Jersey County ozone nonattainment areas.

This action has been classified as a Table 2 action by the Regional Administrator under the procedures published in the **Federal Register** on January 19, 1989 (54 FR 2214–2225), as revised by an October 4, 1993, memorandum from Michael H. Shapiro, Acting Assistant Administrator for Air and Radiation. The Office of Management and Budget (OMB) has exempted this regulatory action from Executive Order 12866 review.

Nothing in this action should be construed as permitting or allowing or establishing a precedent for any future request for revision to any SIP. Each request for revision to any SIP shall be considered separately in light of specific technical, economic, and environmental factors and in relation to relevant statutory and regulatory requirements.

Under the Regulatory Flexibility Act, 5 U.S.C. 600 et seq., USEPA must prepare a regulatory flexibility analysis assessing the impact of any proposed or final rule on small entities. 5 U.S.C. 603 and 604. Alternatively, USEPA may certify that the rule will not have a significant economic impact on a substantial number of small entities. Small entities include small businesses, small not-for-profit enterprises, and government entities with jurisdiction over populations of less than 50,000.

The SIP approvals under section 110 and subchapter I, part D, of the Act do not create any new requirements, but simply approve requirements that the State is already imposing. Therefore, because the Federal SIP approval does not impose any new requirements, I certify that it does not have a significant impact on small entities. Moreover, due to the nature of the Federal-State relationship under the Act, preparation of a regulatory flexibility analysis would constitute Federal inquiry into the economic reasonableness of State action. The Act forbids the USEPA to base its actions concerning SIPs on such grounds. *Union Electric Co.* v. *U.S. E.P.A.*, 427 U.S. 246, 256–66 (1976).

Under section 307(b)(1) of the Act, petitions for judicial review of this action must be filed in the United States Court of Appeals for the appropriate circuit by May 15, 1995. Filing a petition for reconsideration by the Administrator of this final rule does not affect the finality of this rule for the purposes of judicial review nor does it extend the time within which a petition for judicial review may be filed, and shall not postpone the effectiveness of such rule or action. This section may not be callenged later in proceedings to enforce its requirements (see section 307(b)(2)).

List of Subjects in 40 CFR Part 52

Environmental protection, Air pollution control, Carbon monoxide, Hydrocarbons, Nitrogen dioxide, Ozone, Volatile organic compounds.

Dated: February 23, 1995.

Robert Springer,

Acting Regional Administrator.

Part 52, chapter I, title 40 of the Code of Federal Regulations is amended as follows:

PART 52—[AMENDED]

1. The authority citation for part 52 continues to read as follows:

Authority: 42 U.S.C. 7401–7671q.

Subpart O—Illinois

2. Section 52.726 is amended by adding paragraph (i) to read as follows:

§ 52.726 Control strategy: Ozone.

* * * * *

(i) The base year (1990) ozone emission inventory requirement of section 182(a)(1) of the Clean Air Act, as amended in 1990, has been satisfied for the following Illinois ozone nonattainment areas: the Chicago nonattainment area—Cook, DuPage, Kane, Lake, Will and McHenry Counties, Aux Sable and Gooselake Townships in Grundy County, and Oswego Township in Kendall County; the Metro-East St. Louis nonattainment area—Madison, Monroe, and St. Clair Counties; and Jersey County.

[FR Doc. 95–6161 Filed 3–13–95; 8:45 am]

BILLING CODE 6560–50–P

---

40 CFR Parts 52 and 81

[IL80–3–6838; FRL–5170–4]

Approval and Promulgation of Implementation Plans and Designations of Areas for Air Quality Planning Purposes; Illinois

AGENCY: Environmental Protection Agency (USEPA).

ACTION: Final rule.

SUMMARY: On November 25, 1994, USEPA proposed to approve a State Implementation Plan (SIP) request to redesignate the Jersey County, Illinois marginal ozone nonattainment area to attainment of the public health based ozone air quality standard. The USEPA also proposed approval of the accompanying maintenance plan as a SIP revision. The redesignation request and maintenance plan were submitted by the Illinois Environmental Protection Agency (IEPA) on November 12, 1993.

The State has met the requirements for redesignation contained in the Clean Air Act (Act). The redesignation request is based on ambient monitoring data that show no violations for the ozone National Ambient Air Quality Standard during the three-year period from 1990 through 1992. Public comments were solicited on the redesignation request, maintenance plan and on USEPA's proposed action. No public comments were received.

EFFECTIVE DATE: This final rule becomes effective on April 13, 1995.

ADDRESSES: Copies of the SIP revision relevant to this action are available for public inspection during normal business hours at the following location: U.S. Environmental Protection Agency, Region 5, Regulation Development Branch, 77 West Jackson Boulevard, Chicago, Illinois 60604.

FOR FURTHER INFORMATION CONTACT: Edward Doty, Regulation Development Section (AR–18J), Regulation Development Branch, Air and Radiation Division, United States Environmental Protection Agency, Region 5, 77 West Jackson Boulevard, Chicago, Illinois 60604 (312) 886–6057.

SUPPLEMENTARY INFORMATION: On November 12, 1993, the IEPA submitted a redesignation and maintenance plan for Jersey County as a requested SIP revisions. The IEPA has requested that Jersey County be redesignated to attainment for ozone.

On November 6, 1991 (56 FR 56694), the USEPA formally designated Jersey County as a marginal ozone nonattainment area. This classification and designation was based on a monitored violation of the ozone National Ambient Air Quality Standard in Jersey County in 1988.

Jersey County is a rural county located approximately 25 miles north of St. Louis, Missouri. Based on the 1990 census, the population of Jersey County is 20,539, with the largest urban population being that of Jerseyville, with a population of approximately 8,000.

On November 25, 1994, (59 FR 60577) the USEPA proposed approval of the SIP revision request to redesignate the Jersey County, Illinois ozone nonattainment area to attainment and the accompany maintenance plan. Please refer to the November 25, 1994, **Federal Register** (59 FR 60577) and the July 8, 1994, technical support document for additional information on this final rule.

With respect to the requirement of section 172(c)(3), the USEPA notes that the State of Illinois has developed and submitted the required emissions inventory, which section 182(a)(1) required to be submitted by November 15, 1992. On September 13, 1994, USEPA proposed approval of the emissions inventory for Jersey County (59 FR 46920). Elsewhere in this **Federal Register**, the USEPA has taken final action on Illinois' Emissions Inventory SIP revision request, including that portion for Jersey County.

Public Comments

The public comment period for the November 25, 1994 (59 FR 60577), notice of proposed rulemaking to approve the redesignation request for Jersey County closed on December 27, 1994, and no comments were received.

Final Rulemaking Action

The USEPA is approving the redesignation of Jersey County to attainment for ozone because the State of Illinois has met the requirements of the Act revising the Illinois ozone SIP and is approving the maintenance plan as a revision to the SIP.

This action has been classified as a Table 3 action by the Regional Administrator under the procedures published in the **Federal Register** on January 19, 1989 (54 FR 2214–2225), as revised by an October 4, 1993 memorandum from Michael H. Shapiro, Acting Assistant Administrator for Air and Radiation. The OMB has exempted this regulatory action from Executive Order 12866 review.

List of Subjects

40 CFR Part 52

Environmental protection, Air pollution control, Carbon monoxide, Hydrocarbons, Nitrogen dioxide, Ozone, Volatile organic compounds.

Environmental protection, Air pollution control, Carbon monoxide, Hydrocarbons, Nitrogen dioxide, Ozone, Volatile organic compounds.

Dated: February 23, 1995.

Robert Springer,

Acting Regional Administrator.

Chapter I, title 40 of the Code of Federal Regulations is amended as follows:

PART 52—[AMENDED]

1. The authority citation for part 52 continues to read as follows:

Authority: 42 U.S.C. 7401–7671q.

Subpart O—Illinois

2. Section 52.726 is amended by adding paragraph (h) to read as follows:

§ 52.726 Control strategy: Ozone.

* * * * *

(h) Approval—On November 12, 1993, the Illinois Environmental Protection Agency submitted an ozone redesignation request and maintenance plan for Jersey County ozone nonattainment area and requested that Jersey County be redesignated to attainment for ozone. The redesignation request and maintenance plan meet the redesignation requirements in section 107(d)(3)(d) of the Act. The redesignation meets the Federal requirements of section 182(a)(1) of the Clean Air Act as a revision to the Illinois ozone State Implementation Plan for Jersey County.

* * * * *

PART 81—[AMENDED]

1. The authority citation for part 81 continues to read as follows:

Authority: 42 U.S.C. 7401–7871q.

2. In § 81.314 the ozone table is amended by revising the entry ''Jersey County Area'' to read as follows:

§ 81.314 Illinois.

* * * * *

ILLINOIS—OZONE

Designated areas	Designation		Classification	
	Date[1]	Type	Date[1]	Type
* * * *	*		*	*
Jersey County Area Jersey County	[*]	Attainment.		
* * * *	*		*	*

[1] This date is November 15, 1990, unless otherwise noted.
* April 13, 1995.

[FR Doc. 95–6160 Filed 3–13–95; 8:45 am]
BILLING CODE 6560–50–P

FEDERAL COMMUNICATIONS COMMISSION

47 CFR Parts 1 and 5

[ET Docket No. 93–266; FCC 95–80]

Pioneer's Preference Rules

AGENCY: Federal Communications Commission.

ACTION: Final rule.

SUMMARY: By this Second Report and Order, the Commission modifies certain rules regarding its pioneer's preference program. This action is intended to increase the efficiency of the program by making it better comport with competitive bidding authority and the Commission's experience administering it.

EFFECTIVE DATE: April 13, 1995.

FOR FURTHER INFORMATION CONTACT: Rodney Small, Office of Engineering and Technology, (202) 776–1622.

SUPPLEMENTARY INFORMATION: This is a summary of the Commission's Second Report and Order, adopted February 28, 1995, and released March 1, 1995. The full text of this Commission decision is available for inspection and copying during regular business hours in the FCC Reference Center (Room 239), 1919 M Street, NW., Washington, DC. The complete text of this decision also may be purchased from the Commission's duplication contractor, International Transcription Service, Inc., (202) 857–3800, 2100 M Street, NW., Suite 140, Washington, DC 20037.

Summary of Second Report and Order

1. In the Notice of Proposed Rule Making (Notice) in this proceeding, 58 FR 57578 (October 26, 1993), the Commission sought comment on whether and how the pioneer's preference rules could be amended to take into account competitive bidding and its experience administering them, or whether these rules should be repealed. In the Notice, the Commission proposed to eliminate the current policies of issuing public notices specifying pioneer's preference filing deadlines, considering raw experimental license material that relates to preference requests, and making initial determinations on preference requests. The Commission also proposed to limit acceptance of preference requests to services that use new technologies and proposed that preference requests be filed prior to a notice of inquiry (NOI) in a proceeding that addresses a new service or technology, if such a document is issued in advance of a notice of proposed rulemaking (NPRM), rather than the current policy of allowing requests to be filed after an NOI but prior to an NPRM. In the First Report and Order, 59 FR 8413 (February 22, 1994), the Commission determined that it would not apply amendments to its rules to three proceedings in which tentative pioneer's preference decisions had been issued.

2. In the Second Report and Order, the Commission determined that the pioneer's preference program should be retained, but it decided to eliminate its current policies of issuing public notices specifying filing deadlines, considering raw experimental license material that relates to preference requests, and making initial determinations on preference requests. These requirements were originally imposed to ensure a complete record in all pioneer's preference proceedings, but the Commission said that eliminating them would result in a more efficient process with no detriment to the public. The Commission also adopted its proposal to require that preference requests be filed prior to an NOI, if such a document is issued in advance of an NPRM. The Commission stated that deferring the filing deadline to the NPRM stage in cases in which an NOI has been issued may encourage speculative preference requests. Finally, in response to comments to the Notice, the Commission required that any preference grant be conditioned on use of the technology and system for which the preference was awarded.

3. The Commission did not adopt its proposal to limit acceptance of pioneer's preference requests to services that use new technologies. It said that while a pioneer's preference should not be awarded simply for transferring technologies from existing services in one band to similar services in another band, a significant enhancement of an existing service, under some circumstances, could be achieved by combining existing technologies in new and innovative ways. The Commission also noted that the recently-enacted General Agreement on Tariffs and Trade (GATT) legislation provides that preferences be awarded for significant contributions to the development of a new service or to the development of new technologies that substantially enhance an existing service.

4. Additionally, the Commission decided that in services in which licenses are assigned by competitive bidding, any parties receiving pioneer's preferences will be required to pay for their licenses in accord with the payment formula specified in the GATT legislation. The GATT legislation mandates that recipients of preferences in service in which licenses are awarded by competitive bidding and whose requests were accepted for filing after September 1, 1994, pay in a lump sum or in installment payments over a period of not more than five years 85 percent of the average price paid for comparable licenses. The Commission said that it will also use this formula for any future grants of pioneer's preference requests accepted for filing on or before September 1, 1994 and—in accord with the GATT legislation—will determine comparable licenses on a case-by-case basis.

5. Accordingly, *it is ordered* That Parts 1 and 5 of the Commission's Rules are amended as specified below, effective 30 days after publication in the **Federal Register**. This action is taken pursuant to Sections 4(i), 7(a), 303(c), 303(f), 303(g), 303(r), and 309(j) of the Communications Act of 1934, as amended, 47 U.S.C. Sections 154(i), 157(a), 303(c), 303(f), 303(g), 303(r), and 309(j).

List of Subjects

47 CFR Part 1

Administrative practice and procedure.

47 CFR Part 5

Radio.

Federal Communications Commission.

William F. Caton,

Acting Secretary.

Amendatory Text

Parts 1 and 5 of chapter I of title 47 of the Code of Federal Regulations are amended as follows:

PART 1—PRACTICE AND PROCEDURE

1. The authority citation for part 1 continues to read as follows:

Authority: Secs. 4, 303, 48 Stat. 1066, 1082, as amended; 47 U.S.C. 154, 303. Implement 5 U.S.C. 552 and 21 U.S.C. 853a, unless otherwise noted.

2. Section 1.402 of this chapter is amended by revising paragraphs (c), (d), (e), and (g), redesignating paragraph (f) as new paragraph (h), and adding new paragraph (f) to read as follows:

§ 1.402 Pioneer's preference.

* * * * *

(c) Pioneer's preference requests relating to a specific new spectrum-based service or technology will not be

accepted after the Commission's Sunshine Notice is issued announcing initiation, by either a notice of inquiry or notice of proposed rule making that will be considered by the Commission at a public meeting, of a proceeding pertaining to that service or technology. Alternatively, if the Commission initiates a new proceeding pertaining to a specific new spectrum-based service or technology by notation, pioneer's preference requests will not be accepted after such notice is submitted to the Commission for vote.

(d) Pioneer's preference requests complying with the requirements and procedures in paragraphs (a) through (c) of this section will be accepted for filing and listed by file number in a notice of proposed rule making addressing the new service or technology proposed in the request, if such a notice of proposed rule making is adopted. A final determination on a request for pioneer's preference and its scope will normally be made in a report and order adopting new rules for the service or technology proposed in the request, if such rules are adopted. If awarded, the pioneer's preference will provide that the preference applicant's application for a construction permit or license will not be subject to mutually exclusive applications. If granted, the construction permit or license will be subject to the conditions in paragraphs (f) and (g) of this section.

(e) Any interested person may file a statement in support of or in opposition to a request for pioneer's preference listed in a notice of proposed rule making, and a reply to such statements, subject to filing deadlines that shall be published in the notice of proposed rule making. Statements on the merits of pioneer's preference requests must be filed separate from, and not part of, any comments on the rules proposed in the notice of proposed rule making. Statements on pioneer's preference requests will not be accepted prior to issuance of the notice of proposed rule making.

(f) As a condition of its license grant, a pioneer's preference grantee will be required to construct a system that substantially uses the design and technologies upon which its pioneer's preference award is based within a reasonable time, as determined by the Commission, after receiving its license. Failure to comply with this provision will result in revocation of the pioneer grantee's license, and transfer of the license will be prohibited until this requirement is met.

(g) In services in which licenses are assigned by competitive bidding, any parties receiving pioneer's preferences will be required to pay for their licenses in accord with the payment formula specified in the General Agreement on Tariffs and Trade legislation, Public Law 103–465. This formula requires that pioneers pay in a lump sum or in installment payments over a period of not more than five years 85 percent of the average price paid for comparable licenses. Comparable licenses will be determined by the Commission on a case-by-case basis.

* * * * *

3. Section 1.403 is revised to read as follows:

§ 1.403 Notice and availability.

All petitions for rule making (other than petitions to amend the FM, Television, and Air-Ground Tables of Assignments) meeting the requirements of § 1.401 will be given a file number and, promptly thereafter, a ''Public Notice'' will be issued (by means of a Commission release entitled ''Petitions for Rule Making Filed'') as to the petition, file number, nature of the proposal, and date of filing. Petitions for rule making are available at the Commission's Dockets Reference Center (1919 M Street NW., Room 239, Washington, DC).

PART 5—EXPERIMENTAL RADIO SERVICES (OTHER THAN BROADCAST)

1. The authority citation for part 5 continues to read as follows:

Authority: Secs. 4, 303, 48 Stat. 1066, 1082, as amended; 47 U.S.C. 154, 303. Interpret or apply sec. 301, 48 Stat. 1081, as amended; 47 U.S.C. 301.

2. Section 5.207 is revised to read as follows:

§ 5.207 Experiments performed in conjunction with pioneer's preference applications.

An applicant for a pioneer's preference pursuant to § 1.402 of this chapter may file an experimental license application for a limited geographical area, generally including no more than one Metropolitan Statistical Area. In order to be eligible for a preference at the time of a report and order in a proceeding addressing a new service or technology, the experimental applicant must demonstrate the technical feasibility of its proposal by summarizing its experimental results in its preference application, unless it instead submits an acceptable showing of technical feasibility. If a pioneer's preference applicant wishes the Commission to consider in conjunction with the application experimental material filed subsequent to the application, the applicant must summarize this material and submit the summary to the Commission prior to the Sunshine Notice announcing that a report and order pertaining to the new service or technology will be considered by the Commission at a public meeting, or—if a report and order is considered by notation—prior to submission of the report and order to the Commission for vote. All experimental material must be summarized and its relevance to the pioneer's preference application explained in order for it to be considered by the Commission.

[FR Doc. 95–6081 Filed 3–13–95; 8:45 am]

BILLING CODE 6712–01–M

---

47 CFR Part 61

[CC Docket No. 90–132; FCC 95–2]

Competition in the Interstate Interexchange Marketplace

AGENCY: Federal Communications Commission.

ACTION: Final rule.

SUMMARY: In this Memorandum Opinion and Order, the Commission responded to petitions for reconsideration filed in response to the Interexchange Order addressing the remaining issues raised on reconsideration. The Interexchange Order examined the state of competition in the interstate interexchange marketplace. At that time, the Commission concluded that most business services were subject to substantial competition, and therefore lifted or streamlined certain regulatory restrictions on AT&T and other Interexchange Carriers (IXCs). In this Memorandum Opinion and Order, the Commission generally affirmed the various regulatory reforms adopted in the Interexchange Order, with certain minor clarifications and modifications.

EFFECTIVE DATE: April 13, 1995.

FOR FURTHER INFORMATION CONTACT: Kevin Werbach at (202) 418–1580, Policy and Program Planning Division, Common Carrier Bureau.

SUPPLEMENTARY INFORMATION: This is a summary of the Commission's Memorandum Opinion and Order on Reconsideration adopted January 3, 1995, and release February 17, 1995. The full text of this decision is available for inspection and copying during normal business hours in the FCC Dockets Branch (Room 239), 1919 M Street NW., Washington, DC. The complete text of this decision may also be purchased from the Commission's copy contractor, International Transcription Services, Inc., 2100 M

Street NW., Suite 140, Washington, DC 20037.

Summary of Order

1. On August 1, 1991, the Commission adopted the Interexchange Order (56 FR 55235 (Oct. 25, 1991)), concluding an examination of the state of competition in the interstate interexchange marketplace and adapting its regulatory policies in light of this competition. The Commission in the Interexchange Order found that most business services are subject to substantial competition. Based on this conclusion, the Commission further streamlined its regulation of most of AT&T's business services, while retaining price cap regulation for two services that were found to be less competitive—800 services and analog private line services. The Commission also authorized all interexchange carriers (IXCs) to offer service pursuant to individually-negotiated contract rates that are generally available to similarly situated customers. In addition, the Commission eliminated nondiscrimination reporting requirements for AT&T services subject to further streamlining, and the requirement that AT&T submit annually an independent audit report on its installation and maintenance procedures. Finally, the Commission eliminated the comparably efficient interconnection (CEI) filing requirements and CEI parameters for AT&T's provision of enhanced services that rely exclusively on basic services subject to further streamlining.

2. Eleven parties filed petitions seeking reconsideration of the Interexchange Order. The Commission addressed reconsideration requests relating to the bundling of 800 services and inbound services with other services in prior orders. This Memorandum Opinion and Order on Reconsideration responds to the remaining issues on reconsideration, and reaffirms the Interexchange Order with certain minor modifications.

3. The Commission affirmed its decision to permit IXCs to offer services pursuant to individually-negotiated contracts. The Commission rejected arguments that such ''contract carriage'' violated the Communications Act of 1934, that contract carriage would lead to predatory behavior by AT&T, that the presumption of lawfulness accorded AT&T's contract-based tariffs was inconsistent with prior Commission statements, that contract-based tariff filings would provide insufficient information about rates, and that additional safeguards should be imposed upon AT&T for its contract-based service offerings.

4. The Commission clarified its decision to apply the ''substantial cause'' test to tariff revisions that alter material terms and conditions of a long-term contract. In the Interexchange Order, the Commission noted that tariff revisions by dominant carriers altering material terms and conditions of a long-term service tariff are considered reasonable only if the carrier can make a showing of substantial cause for the revisions. The Commission cited earlier decisions as holding that the same test applies to tariff revisions that alter material terms and conditions of a long-term contract. In response to petitions for reconsideration, the Commission first noted that it was unlikely that AT&T would seek to unilaterally modify a contract-based tariff, as such action could damage its relationship with its customers. The Commission then explained that it would consider on a case-by-case basis in light of all relevant circumstances whether a substantial cause showing has been made. The Commission concluded that commercial contract law principles are highly relevant—but not necessarily determinative—to such a decision.

5. The Commission refused to impose additional safeguards to ensure that AT&T's provision of ''customized'' services, such as Tariff 12 and contract services, does not impede competition in the customer premises equipment (CPE) marketplace. The Commission concluded that no party had demonstrated that customers are unaware of the relevant CPE bundling rules, and that it has not been presented with any evidence that systems integrators have been denied access to customized service arrangements.

6. The Commission modified its decision in the Interexchange Order to eliminate comparably efficient interconnection (CEI) requirements for AT&T's provision of enhanced services that rely exclusively on basic services subject to further streamlined regulation. The Commission concluded that the distinction made in the Interexchange Order between streamlined services that are coupled with nonstreamlined services, and those that are not, was without a valid basis and should be abandoned. Consequently, the Commission lifted CEI requirements for any streamlined service provided by AT&T. AT&T was required to file a CEI plan explaining how it will comply with CEI parameters for nonstreamlined services only, for any enhanced service that AT&T proposes to provide that relies on both streamlined and nonstreamlined services.

7. The Commission denied requests that it prohibit AT&T from including nonstreamlined services in its Tariff 12 offerings, or that the Commission apply its bundling restrictions on 800 and inbound services to other nonstreamlined services. The Commission noted that its rationale for prohibiting AT&T from including 800 and inbound services in future contract-based tariffs or Tariff 12s pending 800 number portability was based on specific findings about AT&T ability to leverage its competitive advantage in the 800 marketplace. There are sufficient distinctions, the Commission concluded, between 800 services and other nonstreamlined services, and between contract-based tariffs and Tariff 12 offerings, to justify the policies adopted in the Interexchange Order.

8. Finally, the Commission addressed concerns related to its treatment of analog private line service. The Commission denied requests to reconsider what it meant by the term ''analog private line service.'' The Commission did, however, order AT&T to remove analog private line services provided to government entities through contractual arrangements from Basket 3. This modification was designed to limit AT&T's ability to subsidize rate decreases in some Basket 3 services with rate increases in other analog private line rate elements. In light of this decision, the Commission recalibrated the price cap index (PCI) and the actual price index (API) for Basket 3 to reflect the removal of all analog private line services provided under contract to government entities from this basket.

Ordering Clauses

1. Accordingly, pursuant to authority contained in sections 1, 4, 201–205, and 405 of the Communications Act of 1934, as amended, 47 U.S.C. 151, 154, 201–205, 405, It Is Ordered that the policies, rules and requirements set forth herein Are Adopted, and Part 61 of the Commission's Rules, 47 CFR Part 61, Is Amended as set forth in below, effective April 13, 1995.

2. It is further ordered That the petitions for reconsideration of AT&T, Ad Hoc, ARINC, Alascom, Broadcast Coalition, Citicorp, CompTel, IDCMA, MCI, Sprint and WilTel are Granted in Part and Denied in Part.

List of Subjects in 47 CFR Part 61

Communications common carriers, Reporting and recordkeeping requirements, Telephone.

Amendatory Text

Title 47 of the Code of Federal Regulations, Part 61 is amended as follows:

PART 61—TARIFFS

1. The authority citation for part 61 continues to read as follows:

Authority: Secs. 1, 4(i), 4(j), 201–205, and 403 of the Communications Act of 1934, as amended; 47 U.S.C. 151, 154(i), 154(j), 201–205, and 403, unless otherwise noted.

2. Section 61.42(b)(3) is revised to read as follows:

§ 61.42 Price cap baskets and service categories.

* * * * *

(b) * * *

(3) The business services basket shall contain analog private lines, including analog voice grade private line, unless provided under contract to a government entity, and terrestrial television transmission service.

* * * * *

Federal Communications Commission.

William F. Caton,

Acting Secretary.

[FR Doc. 95–5786 Filed 3–13–95; 8:45 am]

BILLING CODE 6712–01–M

DEPARTMENT OF TRANSPORTATION

Office of the Secretary

49 CFR Part 1

[OST Docket No. 1; Amdt. 1–267]

Organization and Delegation of Powers and Duties Delegations to the Federal Railroad Administrator

AGENCY: Office of the Secretary, DOT.

ACTION: Final rule.

SUMMARY: This rule delegates the Secretary of Transportation's authority to the Federal Railroad Administrator to provide financial assistance for high-speed rail corridor planning and technology improvements, to promulgate necessary safety regulations, and to effectuate the redemption of outstanding obligations and liabilities with respect to the Columbus and Greenville Railway. This rule is necessary to reflect the delegation in the Code of Federal Regulations.

EFFECTIVE DATE: This rule becomes effective March 14, 1995.

FOR FURTHER INFORMATION CONTACT: Gareth W. Rosenau, Attorney, Office of Chief Counsel, Federal Railroad Administration, (202) 366–0620, or Steven B. Farbman, Office of the Assistant General Counsel for Regulation and Enforcement (C–50), (202) 366–9306, Department of Transportation, 400 Seventh Street, SW., Washington, DC 20590.

SUPPLEMENTARY INFORMATION: This document delegates authority to the Federal Railroad Administrator to implement the ''Swift Rail Development Act of 1994,'' being Title I—High-Speed Rail of Public Law 103–440 (108 Stat. 4615) (the ''Act''). The Act provides for high-speed rail assistance for corridor planning and technology improvements and authorizes appropriations for fiscal years 1995 through 1997. The Act provides for the promulgation of such safety regulations as may be necessary for high-speed rail services. The Act also provides for the redemption of outstanding obligations and liabilities with respect to the Columbus and Greenville Railway under sections 505 and 511 of the Railroad Revitalization and Regulatory Reform Act of 1976 (45 U.S.C. 825 and 831, respectively). Since this rule relates to departmental management, organization, procedure, and practice, notice and public comment are unnecessary. For the same reason, good cause exists for not publishing this rule at least 30 days before its effective date, as is ordinarily required by 5 U.S.C. 553(d). Therefore, this rule is effective on the date of its publication.

List of Subjects in 49 CFR Part 1

Authority delegations (Government agencies), Organizations and functions (Government agencies).

In consideration of the foregoing, Part 1 of Title 49, Code of Federal Regulations, is amended as follows:

PART 1—[AMENDED]

1. The authority citation for Part 1 continues to read as follows:

Authority: 49 U.S.C. 322; Public Law 101–552, 28 U.S.C. 2672, 31 U.S.C. 3711(a)(2).

2. Section 1.49 is amended by adding a new paragraph (jj) to read as follows:

§ 1.49 Delegations to Federal Railroad Administrator.

* * * * *

(jj) Exercise the authority vested in the Secretary by the Swift Rail Development Act of 1994, being Title I—High-Speed Rail of Public Law 103–440 (108 Stat. 4615), as it relates to the provision of financial assistance for high-speed rail corridor planning and technology improvements, the promulgation of necessary safety regulations, and the redemption of outstanding obligations and liabilities with respect to the Columbus and Greenville Railway under Sections 505 and 511 of the Railroad Revitalization and Regulatory Reform Act of 1976 (45 U.S.C. 825 and 831, respectively).

Issued at Washington, DC this 3rd day of March 1995.

Federico Peña,

Secretary of Transportation.

[FR Doc. 95–6222 Filed 3–13–95; 8:45 am]

BILLING CODE 4910–62–P

National Highway Traffic Safety Administration

49 CFR Part 571

[Docket No. 93–87; Notice 2]

RIN 2127–AF03

Federal Motor Vehicle Safety Standards; Metric Conversion

AGENCY: National Highway Traffic Safety Administration (NHTSA), DOT.

ACTION: Final rule.

SUMMARY: This final rule amends selected Federal Motor Vehicle Safety Standards (FMVSS) by converting English measurements specified in those standards to metric measurements. This rulemaking is the first of several that NHTSA will undertake to implement the statutory Federal policy that the metric system is the preferred system of weights and measures for U.S. trade and commerce. The conversions are not intended to change the stringency of the affected FMVSS.

DATES: This final rule is effective March 14, 1996. Optional early compliance with the changes made in this final rule is permitted beginning March 14, 1995.

Petitions for reconsideration of this final rule must be filed by April 13, 1995.

ADDRESSES: Petitions for reconsideration of this final rule should refer to the docket and notice number cited in the heading of this final rule and be submitted to: Administrator, National Highway Traffic Safety Administration, 400 Seventh Street, SW., Washington, DC 20590. It is requested but not required, that 10 copies be submitted.

FOR FURTHER INFORMATION CONTACT: Mr. Kevin Cavey, National Highway Traffic Safety Administration, 400 Seventh Street, SW., Washington, DC 20590. Mr. Cavey's telephone number is: (202) 366–5271.

SUPPLEMENTARY INFORMATION: Section 5164 of the Omnibus Trade and Competitiveness Act (Pub. L. 100–418), makes it United States policy that the metric system of measurement is the

preferred system of weights and measures for U.S. trade and commerce. Through Executive Order 12770, Federal agencies were directed to comply with the Act by adopting a conversion schedule for their programs by September 30, 1992. In the April 21, 1992 **Federal Register** (57 FR 14619), NHTSA published for comment its plan to use the metric system in NHTSA programs and included an implementation schedule to convert the Federal Motor Vehicle Safety Standards (FMVSSs). NHTSA projected simple FMVSS conversions would be completed by June 1994, intermediate conversions by December 1996, and the most complex conversions by December 1997. NHTSA described how it would convert English measurements in the FMVSSs to metric measurements.

In response to the plan, NHTSA received five public comments. NHTSA took all comments into consideration in drafting a notice of proposed rulemaking (NPRM) to convert English measurements in selected FMVSS to metric measurements.

Notice of Proposed Rulemaking

NHTSA published on March 15, 1994 (59 FR 11962) a proposal identifying the standards for which NHTSA believed conversions of English measurements to metric measurements would be simple and proposed the appropriate conversions to the metric system. English measurements in the following Federal Motor Vehicle Safety Standards (49 CFR 571 *et seq.*) were proposed to be converted to the metric system: Standard No. 102, Transmission shift lever sequence, starter interlock, and transmission braking effect; Standard No. 103, Windshield defrosting and defogging systems; Standard No. 104, Windshield wiping and washing systems; Standard No. 107, Reflecting surfaces; Standard No. 110, Tire selection and rims; Standard No. 112, Headlamp concealment devices; Standard No. 114, Theft protection; Standard No. 115, Vehicle identification number—basic requirements; Standard No. 120, Tire selection and rims for motor vehicles other than passenger cars; Standard No. 124, Accelerator control systems; Standard No. 126, Truck-camper loading; Standard No. 205, Glazing materials; Standard No. 206, Door locks and door retention components; Standard No. 207, Seating systems; Standard No. 212, Windshield mounting; and Standard No. 216, Roof crush resistance.

In the NPRM, NHTSA highlighted three issues for public comment: whether conversions should be exact or equivalent; how consumer information in labels should be converted; and how force measurements should be converted.

Because using values stated in integers would make it easier to make measurements in compliance testing, NHTSA proposed to favor equivalent conversions, not exact conversions. To illustrate the difference between equivalent and exact conversions, an equivalent conversion of two inches would be 50 millimeters, while an exact conversion would be 50.8 millimeters. NHTSA asked the commenters to indicate any instance in which they believed that an equivalent conversion might have a substantive effect on a standard, and requested that the commenters suggest in those instances an exact conversion. With respect to those requirements for which manufacturers have invested in molds and other equipment that produce lettering of very precise sizes, NHTSA proposed exact conversions so that manufacturers would not have to buy new equipment. NHTSA also proposed exact conversions for gross vehicle weight rating (GVWR) measurements, speed measurements in Standard No. 110, Tire selection and rims, and weight load measurements in Standard No. 212, Windshield mounting and retention.

The agency also sought comment on proposed metric conversions of consumer safety information in labels. Certain FMVSSs require labels that state consumer safety information in English measurements. NHTSA was uncertain whether labels with quantitative information stated solely in metric measurements would be understood by American consumers. Therefore, in those instances in which labels or other information are required for consumers' benefit, NHTSA proposed that both the English and metric units be provided. The labels for which dual measurements were proposed were those required by Std. No. 110, Tire selection and rims, Std. No. 120, Tire selection and rims for motor vehicles other than passenger cars, and Std. No. 126, Truck-camper loading. NHTSA also stated its intent to eventually phase out the English measurements on those labels.

Standards Nos. 207, Seating systems and 216, Roof crush resistance establish strength requirements for occupant seats and for the passenger compartment roof, respectively. The force measurements specified in the standards are straightforward enough when stated in English units, since both weight and force are expressed in pounds. However, the metric system expresses mass in kilograms and force in newtons. Consequently, when force pounds are converted to newtons, the force pounds should be multiplied by 4.448. Thus, in converting Stds. Nos. 207 and 216's English system force measurements to the metric system, NHTSA proposed to specify the steps of the conversion in the regulatory text to minimize the chance of a conversion error.

NHTSA also announced that, in the future, it would convert values (expressed in English measurements) in documents incorporated by reference into the FMVSS, to the metric system, on a document-by-document basis.

Public Comments on the NPRM and NHTSA's Responses

In response to the NPRM, NHTSA received comments from 17 commenters. The commenters generally favored the overall philosophy that NHTSA indicated it would follow in converting English measurements in the FMVSSs to metric measurements. Comments on specific English to metric conversions were offered.

1. ''Exact'' v. ''Equivalent'' Conversions

In general, the commenters agreed with NHTSA's proposal to use equivalent, not exact, conversions. However, several commenters favored exact conversions. Flxible Corporation preferred exact conversions, explaining that making equivalent conversions in some instances and exact conversions in others could cause confusion. The National Truck Equipment Association (NTEA) stated that exact conversions should be used to eliminate the possibility of a standard's effectiveness being diminished. However, since neither Flxible nor NTEA cited specific instances in which making equivalent conversions instead of exact conversions would cause confusion or would lessen a standard's effectiveness, NHTSA is not adopting their recommendations.

With respect to the conversion of some requirements, commenters favored exact conversions and sometimes provided reasons. Ford and Thomas Built Buses expressed a strong preference for the 10,000 lb. gross vehicle weight rating (GVWR) for vehicles to be converted to 4536 kg. Thomas Built stated that the 36 kg. difference between the exact (4536 kg.) and equivalent (4500 kg.) conversions could determine whether many of their vehicles, particularly school buses, are subject to certain safety standards. Since vehicle GVWR seems to be an instance in which there would be a substantive change if exact conversions were not made in this final rule, NHTSA is (as proposed) converting GVWRs of 10,000 lbs. to 4536 kg. and GVWRs of 6,000 lbs. to 2722 kg.

Nissan stated that in Std. No. 104, Windshield wiping and washing systems, and Std. No. 216, Roof crush resistance, one inch should be converted to the exact value of 25.4 millimeters, not the equivalent value of 25 millimeters proposed in the NPRM. Nissan also stated that in S4. of Std. No. 216, the movement of the test device should be limited to 127 millimeters, not the 125 millimeters proposed in the NPRM. Since Nissan did not explain why the equivalent conversions proposed for Stds. Nos. 104 and 216 would make substantive changes, NHTSA is not adopting Nissan's suggestion to use the exact conversions.

Volkswagen recommended that NHTSA's metric conversions be made in such a manner that they result in the same values as those in the comparable parts of the Canadian Motor Vehicle Safety Standards (CMVSS). As stated in the NPRM, NHTSA will make conversions in accordance with SAE guideline J916 May 1991, and Federal Standard 376B ''Preferred Metric Units for General Use by the Federal Government.'' Where consistent with these two documents, and if the changes do not make substantive changes to the safety standards, NHTSA will make conversions consistent with the CMVSS.

The National Institute for Standards and Technology (NIST) and Ford recommended that, to be consistent with the CMVSS, in Std. No. 110, Tire selection and rims, 60 mph be converted to the equivalent measurement of 100 km/h, not the exact measurement of 97 km/h proposed in the NPRM. However, Chrysler commented that there is a significant difference between 97 km/h and 100 km/h, and that therefore the exact conversion of 97 km/h should be used. Based on Chrysler's comment that there would be a substantive change in Std. No. 110 if an equivalent conversion of 100 km/h were adopted, NHTSA is converting 60 mph to 97 km/h.

2. ''Mass'' v. ''Weight''

Commenters noted that kilograms are measures of ''mass,'' not ''weight.'' Thus, they recommended that all NPRM references to ''weight'' be changed to ''mass.'' NHTSA acknowledges that commenters on this issue are technically correct. Thus, in instances in which the safety standards use ''weight'' to mean ''mass'' in describing compliance testing conditions and procedures, or in other instances in which the standards are primarily directed to engineers or other technically trained persons, NHTSA is revising ''weight'' in the regulatory text to ''mass.'' As an example, in a test specified in Std. No. 207, NHTSA proposed that the load applied be 20 times the ''weight'' of the seat. In the final rule, Std. No. 207 is amended to refer to the ''mass'' of the seat.

However, in instances in which the word ''weight'' is part of a term defined at 49 CFR part 571.3, such as ''curb weight,'' ''gross axle weight rating,'' ''gross vehicle weight rating,'' or ''unloaded vehicle weight,'' NHTSA is not making the change. In the NPRM, since NHTSA did not propose to amend the terms, adopting the terms ''curb mass,'' ''gross axle mass rating,'' or ''gross vehicle mass rating,'' is outside the scope of this rulemaking. NHTSA will consider amending these terms using ''mass'' in future rulemakings to metrify the safety standards.

NHTSA is also concerned about the effect of changing from ''mass'' to ''weight.'' For example, it is not known whether the general public would be confused by use of the phrase ''Camper mass is _____ kg'' rather than ''Camper weight,'' specified in Std. No. 126. In addition, the States use terms such as gross vehicle ''weight'' rating as the basis for determining which vehicle registration fees, driver's licensing requirements, and restrictions on use of roads are applicable to particular vehicles. Before making a change from ''weight'' to ''mass,'' NHTSA wants to obtain public comment and will propose any such changes in future metrication rulemakings.

3. Consumer Information

In general, the commenters favored NHTSA's proposal to use dual English and metric measurements for information intended for consumers. Mr. Lawrence Stempnik noted that the technically correct abbreviations for units of measurement were not provided in Std. No. 126, Truck-camper loading. The California Highway Patrol commented that the units of measurement are intended to provide safety information, not a ''metric conversion educational program.'' NHTSA agrees that there should be no ambiguity in the metric units of measurement on labels that provide safety information to consumers. If unfamiliar terms are spelled out instead of abbreviated, there is less ambiguity and confusion. Thus, NHTSA is not adopting Mr. Stempnik's suggestion for the use of abbreviations, and is instead specifying the units of measurement as ''Liters'' and ''cubic meters,'' as proposed, rather than the abbreviations ''L'' and ''m^3.''

NIST recommended that dual labeling in English and metric units be required for only a limited time, but did not recommend a particular duration for that requirement. In the future, when consumers are familiar with metric measurements and there is no safety need for continuing to provide English measurements on labels, NHTSA expects to phase out the requirement for English measurements.

Mack Trucks and the National Truck Equipment Association had recommendations for metric conversions of certification labels specified in 49 CFR parts 567 and 568. Since the NPRM did not propose changes to parts 567 or 568, these conversions are outside the scope of this rulemaking. However, NHTSA will take these comments into consideration during its review of parts 567 and 568 for conversion to metric measurements.

4. Force Measurements

NHTSA proposed to convert force measurements in Std. No. 207, Seating systems, and Std. No. 216, Roof crush resistance, by specifying the steps of the conversion in the regulatory language. Except for the earlier discussed recommendation to specify ''mass'' instead of ''weight,'' commenters generally agreed with NHTSA's proposal to specify force measurements in terms of kilograms multiplied by 9.8 to obtain newtons of force. For Stds. Nos. 207 and 216, NIST recommended that the kilograms be multiplied by 10 (rather than 9.8) to facilitate calculations of force. NIST's recommendation will not be adopted because NHTSA is not certain that use of a multiplier of 10 would not substantively change the stringency of tests specified in Stds. Nos. 207 and 216.

Thus, in the final rule, for Std. No. 207, NHTSA amends the force measurement language to provide that the seat shall be subjected to a force in newtons equal to 20 times the mass of the seat, measured in kilograms and multiplied by 9.8. For Std. No. 216, NHTSA amends the force measurement language to provide that the vehicle roof shall be subjected to a force in newtons equal to 1½ times the vehicle mass, measured in kilograms and multiplied by 9.8.

5. Use of Incorporated Documents

In addressing whether values in incorporated documents should be converted, commenters urged NHTSA not to convert English measurements in outdated or superseded SAE Recommended Practices or standards, but to adopt the most recent SAE standards, which often specify metric measurements. NHTSA notes that the comments go beyond the scope of this rulemaking. Nevertheless, when NHTSA decides, on a document by document

basis, whether to convert incorporated documents to the metric system, it will consider these views.

Effective Date

Chrysler recommended that the metrication changes take effect one year after issuance of the final rule. Chrysler stated that this lead time was necessary so that manufacturers could make the changes, taking into account that label manufacturers ''serve all of the vehicle manufacturers.'' NHTSA concurs that because this final rule will result in many manufacturers having to change labels, a one year lead time is appropriate. Thus, this final rule will take effect one year after it is published in the **Federal Register**. Manufacturers at their option, may comply with the amendments made by this final rule before the effective date.

Rulemaking Analyses and Notices

1. Executive Order 12866 and DOT Regulatory Policies and Procedures

This action was not reviewed under E. O. 12866, ''Regulatory Planning and Review.'' NHTSA has considered the impact of this rulemaking action under the Department of Transportation's regulatory policies and procedures and determined that it is not ''significant.'' In converting the Federal Motor Vehicle Safety Standards from the English to the metric system, the agency makes conversions that do not substantively change the performance requirements of the FMVSSs. In complying with this final rule, manufacturers providing consumer information (e.g., labeling) may incur one time, additional costs since they would have to change their information to add the metric units. However, the agency believes that the additional costs would be minuscule, since manufacturers already provide consumer information in English units.

NHTSA determines that new labeling requirements in the following three standards would result in minor costs to manufacturers. For Standards Nos. 110 and 120, NHTSA estimates that changing the molds of non-pneumatic tires would initially cost $300,000 per year for the industry, or a few cents per tire. After the initial changes in the molds, further costs would be negligible. For Standard No. 120, NHTSA estimates that requiring the tire information label to have both English and metric units would increase costs by about one cent per motor vehicle, for vehicles other than passenger cars. The total cost to industry is approximately $62,000 for the 6.2 million vehicles sold in 1994. For Standard No. 126, since there are only 10,000 truck campers sold per year, changes to the truck-camper loading label will cost more than a few cents per label, but NHTSA estimates the total cost to industry will be less than $10,000 a year. In sum, NHTSA estimates that the total costs resulting from changes made by this final rule are $372,000.

For these reasons, NHTSA determines the impacts of this action are so minor that a full regulatory evaluation for this final rule is not necessary.

2. Small Entity Impacts

The agency has also considered the effects of this rulemaking action under the Regulatory Flexibility Act (5 U.S.C. 601 *et seq.*). I certify that this final rule would not have a significant economic impact on a substantial number of small entities. The rationale for this certification is that converting the FMVSS from the English system to the metric system does not make any substantive change to the performance requirements of any of the Federal Motor Vehicle Safety Standards. Manufacturers that qualify as small businesses that do not now label their products in metric units or provide consumer information in metric units will incur some slight costs to include metric units. However, the agency believes such costs would be minimal, given these manufacturers are currently labeling and providing the consumer information in English units.

3. Environmental Impacts

In accordance with the National Environmental Policy Act of 1969, the agency has considered the environmental impacts of this rule and determined that, it will not have a significant impact on the quality of the human environment.

4. Federalism

This action has been analyzed in accordance with the principles and criteria contained in Executive Order 12612, and it has been determined that the rule does not have sufficient federalism implications to warrant the preparation of a Federalism Assessment.

5. Civil Justice Reform

This final rule will not have any retroactive effect. Under 49 U.S.C. section 30103, whenever a Federal motor vehicle safety standard is in effect, a state may not adopt or maintain a safety standard applicable to the same aspect of performance which is not identical to the Federal standard. 49 U.S.C. section 30161 sets forth a procedure for judicial review of final rules establishing, amending or revoking Federal motor vehicle safety standards. That section does not require submission of a petition for reconsideration or other administrative proceedings before parties may file suit in court.

List of Subjects in 49 CFR Part 571

Imports, Motor vehicle safety, Motor vehicles, Rubber and rubber products, Tires.

In consideration of the foregoing, the Federal Motor Vehicle Safety Standards (49 CFR part 571), are amended as set forth below.

PART 571—FEDERAL MOTOR VEHICLE SAFETY STANDARDS

1. The authority citation for part 571 continues to read as follows:

Authority: 49 U.S.C. 322, 30111, 30115, 30117, and 30166; delegation of authority at 49 CFR 1.50.

§ 571.102 [Amended]

2. Section 571.102 is amended by revising S1 and S3.1.2 to read as follows:

§ 571.102 Standard No. 102, Transmission shift lever sequence, starter interlock, and transmission braking effect.

S1. *Purpose and scope.* This standard specifies the requirements for the transmission shift lever sequence, a starter interlock, and for a braking effect of automatic transmissions, to reduce the likelihood of shifting errors, starter engagement with vehicle in drive position, and to provide supplemental braking at speeds below 40 kilometers per hour.

* * * * *

S3.1.2 *Transmission braking effect.* In vehicles having more than one forward transmission gear ratio, one forward drive position shall provide a greater degree of engine braking than the highest speed transmission ratio at vehicle speeds below 40 kilometers per hour.

* * * * *

§ 571.103 [Amended]

3. Section 571.103 is amended by revising S3; and, in S4.3, revising paragraphs (b)(2)(ii), (e), (g), and (h), to read as follows:

§ 571.103 Standard No. 103, Windshield defrosting and defogging systems.

* * * * *

S3. *Definitions. Road load* means the power output required to move a given motor vehicle at curb weight plus 180 kilograms on level, clean, dry, smooth portland cement concrete pavement (or other surface with equivalent coefficient of surface friction) at a specified speed through still air at 20 degrees Celsius,

and standard barometric pressure (101.3 kilopascals) and includes driveline friction, rolling friction, and air resistance.

* * * * *

S4.3 * * *

(b) * * *

(2) * * *

(ii) The engine speed and load shall not exceed the speed and load at 40 kilometers per hour in the manufacturer's recommended gear with road load;

* * * * *

(e) One or two windows may be open a total of 25 millimeters;

(f) * * *

(g) The wind velocity is at any level from 0 to 3 kilometers per hour.

(h) The test chamber temperature and the wind velocity shall be measured, after the engine has been started, at the forwardmost point of the vehicle or a point 914 millimeters from the base of the windshield, whichever is farther forward, at a level halfway between the top and bottom of the windshield on the vehicle centerline.

* * * * *

§ 571.104 [Amended]

4. § 571.104 is amended by revising, in S3, the paragraph titled ''*Glazing surface reference line;*'' and revising S4.1.2, to read as follows:

§ 571.104 Standard No. 104, Windshield wiping and washing systems.

* * * * *

S3 * * *

Glazing surface reference line means the line resulting from the intersection of the glazing surface and a horizontal plane 625 millimeters above the seating reference point, as shown in Figure 1 of SAE Recommended Practice J903a, ''Passenger Car Windshield Wiper Systems,'' May 1966.

* * * * *

S4.1.2 *Wiped area.* When tested wet in accordance with SAE Recommended Practice J903a, May 1966, each passenger car windshield wiping system shall wipe the percentage of Areas A, B, and C of the windshield (established in accordance with S4.1.2.1) that (1) is specified in column 2 of the applicable table following subparagraph S4.1.2.1 and (2) is within the area bounded by a perimeter line on the glazing surface 25 millimeters from the edge of the daylight opening.

* * * * *

5. In Section 571.104, S4.1.2.1 is amended by revising the title of Table I; the title of Table II; the title of Table III; and the title of Table IV, to read as follows:

* * * * *

Table I—Passenger Cars of Less Than 1520 Millimeters in Overall Width

* * * * *

Table II—Passenger Cars of 1520 or More But Less Than 1630 Millimeters in Overall Width

* * * * *

Table III—Passenger Cars of 1630 or More But Less Than 1730 Millimeters in Overall Width

* * * * *

Table IV—Passenger Cars of 1730 or More Millimeters in Overall Width

* * * * *

§ 571.110 [Amended]

6. Section 571.110 is amended by revising, in S3, the definitions ''*Normal occupant weight,*'' ''*Production options weight,*'' and ''*Vehicle capacity weight;*'' in S4.4.1, revising paragraph (b); in S6, revising the introductory paragraph, and paragraph (b); and revising S7.1, to read as follows:

571.110 Standard No. 110, Tire selection and rims.

* * * * *

S3. * * *

Normal occupant weight means 68 kilograms times the number of occupants specified in the second column of Table I.

* * * * *

Production options weight means the combined weight of those installed regular production options weighing over 2.3 kilograms in excess of those standard items which they replace, not previously considered in curb weight or accessory weight, including heavy duty brakes, ride levelers, roof rack, heavy duty battery, and special trim.

* * * * *

Vehicle capacity weight means the rated cargo and luggage load plus 68 kilograms times the vehicle's designated seating capacity.

* * * * *

S4.4.1 * * *

(b) In the event of rapid loss of inflation pressure with the vehicle traveling in a straight line at a speed of 97 kilometers per hour, retain the deflated tire until the vehicle can be stopped with a controlled braking application.

* * * * *

S6 *Labeling Requirements for Non-Pneumatic Spare Tires or Tire Assemblies.* Each non-pneumatic tire or, in the case of a non-pneumatic tire assembly in which the non-pneumatic tire is an integral part of the assembly, each non-pneumatic tire assembly shall include, in letters or numerals not less than 4 millimeters high, the information specified in paragraphs S6 (a) and (b). The information shall be permanently molded, stamped, or otherwise permanently marked into or onto the non-pneumatic tire or non-pneumatic tire assembly, or shall appear on a label that is permanently attached to the tire or tire assembly. If a label is used, it shall be subsurface printed, made of material that is resistant to fade, heat, moisture and abrasion, and attached in such a manner that it cannot be removed without destroying or defacing the label on the non-pneumatic tire or tire assembly. The information specified in paragraphs S6 (a) and (b) shall appear on both sides of the non-pneumatic tire or tire assembly, except, in the case of a non-pneumatic tire assembly which has a particular side that must always face outward when mounted on a vehicle, in which case the information specified in paragraphs S6 (a) and (b) shall only be required on the outward facing side. The information shall be positioned on the tire or tire assembly such that it is not placed on the tread or the outermost edge of the tire and is not obstructed by any portion of any non-pneumatic rim or wheel center member designated for use with that tire in this standard or in Standard No. 129.

(a) * * *

(b) MAXIMUM 80 KM/H (50 M.P.H.).

* * * * *

S7.1 *Vehicle Placarding Requirements.* A placard, permanently affixed to the inside of the vehicle trunk or an equally accessible location adjacent to the non-pneumatic spare tire assembly, shall display the information set forth in S6 in block capitals and numerals not less than 6 millimeters high preceded by the words ''IMPORTANT—USE OF SPARE TIRE'' in letters not less than 9 millimeters high.

* * * * *

§ 571.112 [Amended]

7. Section 571.112 is amended by revising S4.5 to read as follows:

§ 571.112 Standard No. 112, Headlamp concealment devices.

* * * * *

S4.5 Except for cases of malfunction covered by S4.2, each headlamp concealment device shall, within an ambient temperature range of −30 degrees Celsius to +50 degrees Celsius be capable of being fully opened in not more than 3 seconds after actuation of the mechanism described in S4.3.

* * * * *

§ 571.114 [Amended]

8. Section 571.114 is amended by revising S2 and revising S4.1, to read as follows:

§ 571.114 Standard No. 114, Theft protection.

* * * * *

S2. *Application.* This standard applies to passenger cars, and to trucks and multipurpose passenger vehicles having a GVWR of 4536 kilograms or less. However, it does not apply to walk-in van-type vehicles.

* * * * *

S4.1 Each truck and multipurpose passenger vehicle having a GVWR of 4536 kilograms or less manufactured on or after September 1, 1983 and each passenger car shall meet the requirements of S4.2, S4.3, S4.4, and S4.5. However, open-body type vehicles that are manufactured for operation without doors and that either have no doors or have doors that are designed to be easily attached to and removed from the vehicle by the vehicle owner are not required to comply with S4.5.

* * * * *

§ 571.115 [Amended]

9. Section 571.115 is amended by revising S4.6 to read as follows:

§ 571.115 Standard No. 115, Vehicle identification number—basic requirements.

* * * * *

S4.6 The VIN for passenger cars, multipurpose passenger vehicles, and trucks of 4536 kilograms or less GVWR shall be located inside the passenger compartment. It shall be readable, without moving any part of the vehicle, through the vehicle glazing under daylight lighting conditions by an observer having 20/20 vision (Snellen) whose eye-point is located outside the vehicle adjacent to the left windshield pillar. Each character in the VIN subject to this paragraph shall have a minimum height of 4 mm.

* * * * *

§ 571.118 [Amended]

10. Section 571.118 is amended by revising S2. to read as follows:

§ 571.118 Standard No. 118, Power-operated window, partition, and roof panel systems.

* * * * *

S2. *Application.* This standard applies to passenger cars, multipurpose passenger vehicles, and trucks with a gross vehicle weight rating of 4536 kilograms or less. The standard's requirements for power-operated roof panel systems need not be met for vehicles manufactured before September 1, 1993.

* * * * *

§ 571.120 [Amended]

11. Section 571.120 is amended by revising the first sentence in S5.1.2; revising in S5.2, the introductory paragraph; revising in S5.3, the introductory paragraph; revising S5.3.2; revising in S7, the introductory paragraph and paragraph (b); and revising S8.1, to read as follows:

§ 571.120 Standard No. 120, Tire selection and rims for motor vehicles other than passenger cars.

* * * * *

S5.1.2 Except in the case of a vehicle which has a speed attainable in 3.2 kilometers of 80 kilometers per hour or less, the sum of the maximum load ratings of the tires fitted to an axle shall be not less than the gross axle weight rating (GAWR) of the axle system as specified on the vehicle's certification label required by 49 CFR part 567.

* * *

* * * * *

S5.2 *Rim marking.* On and after August 1, 1977, each rim or, at the option of the manufacturer in the case of a singlepiece wheel, wheel disc shall be marked with the information listed in paragraphs (a) through (e) of this paragraph, in lettering not less than 3 millimeters high, impressed to a depth or, at the option of the manufacturer, embossed to a height of not less than 0.125 millimeters. The information listed in paragraphs (a) through (c) of this paragraph shall appear on the weather side. In the case of rims of multipiece construction, the information listed in paragraphs (a) through (e) of this paragraph shall appear on the rim base and the information listed in paragraphs (b) and (d) of this paragraph shall also appear on each other part of the rim.

* * * * *

S5.3 *Label information.* Each vehicle manufactured on or after December 1, 1984, shall show the information specified in S5.3.1 and S5.3.2, and in the case of a vehicle equipped with a non-pneumatic spare tire, the information specified in S5.3.3, in the English language, lettered in block capitals and numerals not less than 2.4 millimeters high and in the format set forth following this section. This information shall appear either-

* * * * *

S5.3.2. *Rims.* The size designation and, if applicable, the type designation of Rims (not necessarily those on the vehicle) appropriate for those tires.

Truck Example—Suitable Tire-Rim Choice

GVWR: 7,840 kilograms (17280 pounds)
GAWR: Front—2,850 kilograms (6,280 pounds) with 7.50–20(D) tires, 20 x 6.00 rims at 520 kPa (75 psi) cold single
GAWR: Rear—4990 kilograms (11,000 pounds) with 7.50–20(D) tires, 20 x 6.00 rims, at 450 kPa (65 psi) cold dual
GAWR: 13,280 kilograms (29,279 pounds)
GAWR: Front—4,826 kilograms (10,640 pounds) with 10.00–20(F) tires, 20 x 7.50 rims, at 620 kPa (90 psi) cold single
GAWR: Rear—8,454 kilograms (18,639 pounds) with 10.00–20(F) tires, 20 x 7.50 rims, at 550 kPa (80 psi) cold dual.

* * * * *

S7 *Labeling Requirements for Non-Pneumatic Spare Tires or Tire Assemblies.* Each non-pneumatic tire or, in the case of a non-pneumatic tire assembly in which the non-pneumatic tire is an integral part of the assembly, each non-pneumatic tire assembly shall include, in letters or numerals not less than 4 millimeters high, the information specified in paragraphs S7 (a) and (b). The information shall be permanently molded, stamped, or otherwise permanently marked into or onto the non-pneumatic tire or non-pneumatic tire assembly, or shall appear on a label that is permanently attached to the tire or tire assembly. If a label is used, it shall be subsurface printed, made of material that is resistant to fade, heat, moisture and abrasion, and attached in such a manner that it cannot be removed without destroying or defacing the label on the non-pneumatic tire or tire assembly. The information specified in paragraphs S7 (a) and (b) shall appear on both sides of the non-pneumatic tire or tire assembly, except, in the case of a non-pneumatic tire assembly which has a particular side that must always face outward when mounted on a vehicle, in which case the information specified in paragraphs S7 (a) and (b) shall only be required on the outward facing side. The information shall be positioned on the tire or tire assembly such that it is not placed on the tread or the outermost edge of the tire and is not obstructed by any portion of any non-pneumatic rim or wheel center member designated for use with that tire in this standard or in Standard No. 129.

* * * * *

(b) MAXIMUM 80 KM/H (50 M.P.H.).

* * * * *

S8.1 *Vehicle Placarding Requirements.* A placard, permanently affixed to the inside of the spare tire stowage area or equally accessible location adjacent to the non-pneumatic spare tire assembly, shall display the information set forth in S7 in block capitals and numerals not less than 6

millimeters high preceded by the words ''IMPORTANT—USE OF SPARE TIRE'' in letters not less than 9 millimeters high.

* * * * *

§ 571.124 [Amended]

12. Section 571.124 is amended by revising S5 and revising S5.3 to read as follows:

§ 571.124 Standard No. 124, Accelerator control systems.

* * * * *

S5. *Requirements.* The vehicle shall meet the following requirements when the engine is running under any load condition, and at any ambient temperature between −40 degrees Celsius and +52 degrees Celsius after 12 hours of conditioning at any temperature within that range.

* * * * *

S5.3 Except as provided below, maximum time to return to idle position shall be 1 second for vehicles of 4536 kilograms or less GVWR, and 2 seconds for vehicles of more than 4536 kilograms GVWR. Maximum time to return to idle position shall be 3 seconds for any vehicle that is exposed to ambient air at −18 degrees Celsius to −40 degrees Celsius during the test or for any portion of the 12-hour conditioning period.

* * * * *

§ 571.126 [Amended]

13. Section 571.126 is amended by revising in S4, the paragraph titled ''*Cargo weight rating*''; revising in S5.1.1, the introductory paragraph and paragraph (d); and revising in S5.1.2, paragraphs (b) and (e), to read as follows:

§ 571.126 Standard No. 126, Truck-camper loading.

* * * * *

S4. * * *

Cargo weight rating means the value specified by the manufacturer as the cargo-carrying capacity, in pounds and kilograms, of a vehicle, exclusive of the weight of occupants in designated seating positions.

* * * * *

S5.1.1 *Labels.* Each slide-in camper shall have permanently affixed to it, in a manner that it cannot be removed without defacing or destroying it, in a plainly visible location on an exterior rear surface other than the roof, steps, or bumper extension, a label containing the following information in the English language lettered in block capitals and numerals not less than 2.4 millimeters high, of a color contrasting with the background, and in the order shown below and in the form illustrated in Figure 1.

* * * * *

(d) The following statement completed as appropriate: ''Camper weight is _____ Kgs. (_____ Lbs.) Maximum When it Contains Standard Equipment, _____ Liters (_____ Gal.) of Water, _____ Kgs. (_____ Lbs.) of Bottled Gas, and _____ Cubic Meters (_____ Cubic Ft.) Refrigerator (or Icebox with _____ Kgs. (_____ Lbs.) of Ice, as applicable). Consult Owner's Manual (or Data Sheet as applicable) for Weights of Additional or Optional Equipment.''

''Liters and Gals. of water'' refer to the volume of water necessary to fill the camper's fresh water tanks to capacity. ''Kgs. and Lbs. of Bottled Gas'' refer to the mass of the gas necessary to fill the camper's bottled gas tanks to capacity. The statement regarding a ''Refrigerator'' or ''Icebox'' refers to the capacity of the refrigerator with which the vehicle is equipped or the mass of the ice with which the icebox may be filled. Any of these items may be omitted from the statement, if the corresponding accessories are not included with the camper, provided that the omission is noted in the camper owner's manual as required in paragraph S5.1.2(a).

* * * * *

S5.1.2 * * *

(b) A list of other additional or optional equipment that the camper is designed to carry, and the maximum mass of each if its mass is more than 9 kilograms when installed.

* * * * *

(e) A picture showing the location of the longitudinal center of gravity of the camper within an accuracy of 50 millimeters under the loaded condition specified in paragraph S5.1.1(d), in the manner illustrated in Figure 2. Until October 1, 1973, the phrase ''Mount at Aft End of Truck Cargo Area'' may be used in Figure 2 instead of ''Point That Contacts Rear End of Truck Bed.''

* * * * *

14. Section 571.126 is amended by revising Figure 1 at the end of the introductory paragraph in S5.1.1 to read as follows:

MFD. BY: (CAMPER MANUFACTURER'S NAME)

(MONTH AND YEAR OF MANUFACTURE)

THIS CAMPER CONFORMS TO ALL APPLICABLE FEDERAL MOTOR VEHICLE SAFETY STANDARDS IN EFFECT ON THE DATE OF MANUFACTURE SHOWN ABOVE

CAMPER WEIGHT IS _____ KG (_____ LBS) MAXIMUM WHEN IT CONTAINS STANDARD EQUIPMENT, _____ LTRS (_____ GAL) OF WATER, _____ KG (_____ LBS) OF BOTTLED GAS, AND _____ CUBIC METERS (_____ CUBIC FT) REFRIGERATOR (OR ICEBOX WITH _____ KG (_____ LBS) OF ICE, AS APPLICABLE). CONSULT OWNER'S MANUAL (OR DATA SHEET AS APPLICABLE) FOR WEIGHTS OF ADDITIONAL OR OPTIONAL EQUIPMENT.

(VEHICLE IDENTIFICATION NUMBER)

Figure 1. Label for Campers

15. In Section 571.126, Figure 2 at S5.1.1, after the introductory paragraph, is revised to read as follows:

BILLING CODE 4910–59–P

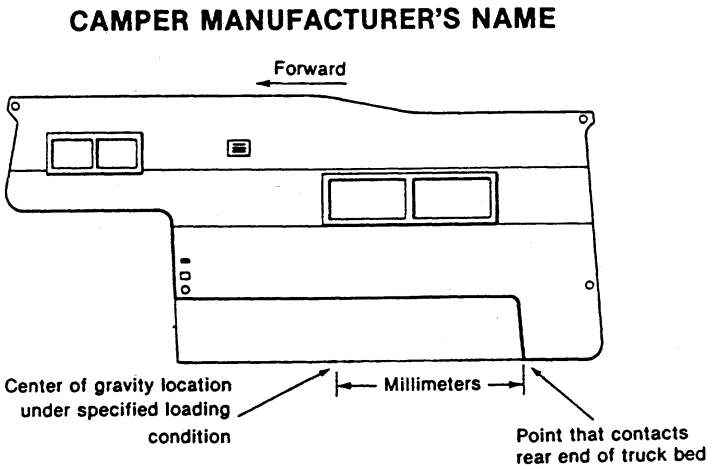

Figure 2.—Camper Center Of Gravity Information

BILLING CODE 4910–59–C

§ 571.205 [Amended]

16. Section 571.205 is amended by revising in S5.1.1.2, paragraph (m); revising S5.1.1.5; revising in S5.1.2.2, paragraph (b); revising in S5.1.2.3, paragraph (b); revising in S5.1.2.9, paragraph (b); and revising in S5.1.2.10, paragraph (b), to read as follows:

§ 571.205 Standard No. 205, Glazing materials.

* * * * *

S5.1.1.2 * * *

(m) For Item 5 safety glazing only: Motorcycle windscreens below the intersection of a horizontal plane 380 millimeters vertically above the lowest seating position.

* * * * *

S5.1.1.5 The phrase ''readily removable'' windows as defined in ANS Z26, for the purposes of this standard, in buses having a GVWR of more than 4536 kilograms, shall include pushout windows and windows mounted in emergency exists that can be manually pushed out of their location in the vehicle without the use of tools, regardless of whether such windows remain hinged at one side to the vehicle.

* * * * *

S5.1.2.2 * * *

(b) Motorcycle windscreens below the intersection of a horizontal plane 380 millimeters vertically above the lowest seating position.

* * * * *

S5.1.2.3 * * *

(b) Motorcycle windscreens below the intersection of a horizontal plane 380 millimeters vertically above the lowest seating position.

* * * * *

S5.1.2.9 * * *

(b) Glass-plastic specimens shall be exposed to an ambient air temperature of −40 degrees Celsius (plus or minus 5 degrees Celsius), for a period of 6 hours at the commencement of Test No. 28, rather than at the initial temperature specified in that test. After testing, the glass-plastic specimens shall show no evidence of cracking, clouding, delaminating, or other evidence of deterioration.

* * * * *

S5.1.2.10 * * *

(b) Each manufacturer of glazing materials designed to meet the requirements of paragraphs S5.1.2.4, S5.1.2.5, S5.1.2.6, S5.1.2.7, or S5.1.2.8 may permanently and indelibly mark the lower center of each item of such glazing material, in letters not less than 4.5 millimeters nor more than 6 millimeters high, the following words, GLASS PLASTIC MATERIAL—SEE OWNER'S MANUAL FOR CARE INSTRUCTIONS.

* * * * *

§ 571.206 [Amended]

17. Section 571.206 is amended by revising S4.1.1.1; revising S4.1.1.2; revising S4.1.2; revising S4.2.1.1; revising S4.2.1.2; revising S4.2.2; revising S4.3; and revising S5.3, to read as follows:

§ 571.206 Standard No. 206, Door locks and door retention components.

* * * * *

S4.1.1.1 *Longitudinal Load.* The door latch and striker assembly, when in the fully latched position, shall not separate when a longitudinal load of 11,120 newtons is applied. When in the secondary latch position, the door latch and striker assembly shall not separate when a longitudinal load of 4,450 newtons is applied.

S4.1.1.2 *Transverse Load.* The door latch and striker assembly, when in the fully latched position, shall not separate when a transverse load of 8,900 newtons is applied. When in the secondary latched position, the door latch and striker assembly shall not separate when a transverse load of 4,450 newtons is applied.

* * * * *

S4.1.2 *Door Hinges.* Each door hinge system shall support the door and shall not separate when a longitudinal load of 11,120 newtons is applied. Similarly, each door hinge system shall not separate when a transverse load of 8,900 newtons is applied.

* * * * *

S4.2.1.1 *Longitudinal Load.* Each latch system, when in the latched position, shall not separate when a longitudinal load of 11,120 newtons is applied.

S4.2.1.2 *Transverse Load.* Each latch system, when in the latched position, shall not separate when a transverse load of 8,900 newtons is applied. When more than one latch system is used on a single door, the load requirement may be divided among the total number of latch systems.

S4.2.2 *Door Hinges.* Each door hinge system shall support the door and shall not separate when a longitudinal load of 11,120 newtons is applied, and when a transverse load of 8,900 newtons is applied.

S4.3 *Sliding Doors.* The track and slide combination or other supporting means for each sliding door shall not separate when a total transverse load of 17,800 newtons is applied, with the door in the closed position.

* * * * *

S5.3 *Sliding Doors.* Compliance with S4.3 shall be demonstrated by applying

an outward transverse load of 8,900 newtons to the load bearing members at the opposite edges of the door (17,800 newtons total). The demonstration may be performed either in the vehicle or with the door retention components in a bench test fixture.

§ 571.207 [Amended]

18. Section 571.207 is amended by revising in S4.2, the introductory paragraph, paragraph (a), paragraph (b), and paragraph (d); revising S4.3.2.1; and revising S5.1.2, to read as follows:

§ 571.207 Standard No. 207, Seating systems.

* * * * *

S.4.2 *General performance requirements.* When tested in accordance with S5., each occupant seat, other than a side-facing seat or a passenger seat on a bus, shall withstand the following forces, in newtons.

(a) In any position to which it can be adjusted—20 times the mass of the seat in kilograms multiplied by 9.8 applied in a forward longitudinal direction;

(b) In any position to which it can be adjusted—20 times the mass of the seat in kilograms multiplied by 9.8 applied in a rearward longitudinal direction;

* * * * *

(d) In its rearmost position—a force that produces a 373 newton meters moment about the seating reference point for each designated seating position that the seat provides, applied to the upper cross-member of the seat back or the upper seat back, in a rearward longitudinal direction for forward-facing seats and in a forward longitudinal direction for rearward-facing seats.

* * * * *

S4.3.2.1 *Static force.*

(a) Once engaged, the restraining device for a forward-facing seat shall not release or fail when a forward longitudinal force, in newtons, equal to 20 times the mass of the hinged or folding portion of the seat in kilograms multiplied by 9.8 is applied through the center of gravity of that portion of the seat.

(b) Once engaged, the restraining device for a rearward-facing seat shall not release or fail when a rearward longitudinal force, in newtons, equal to 8 times the mass of the hinged or folding portion of the seat in kilograms multiplied by 9.8 is applied through the center of gravity of that portion of the seat.

* * * * *

S5.1.2 If the seat back and the seat bench are attached to the vehicle by different attachments, attach to each component a fixture capable of transmitting a force to that component. Apply forces, in newtons, equal to 20 times the mass of the seat in kilograms multiplied by 9.8 horizontally through the center of gravity of the seat back, as shown in Figure 2 and apply forces, in newtons, equal to 20 times the mass of the seat in kilograms multiplied by 9.8 horizontally through the center of gravity of the seat bench, as shown in Figure 3.

* * * * *

§ 571.212 [Amended]

19. Section 571.212 is amended by revising S3; revising S5; revising in S6.1, paragraph (b); and revising S6.5, to read as follows:

§ 571.212 Standard No. 212, Windshield mounting.

* * * * *

S3. *Application.* This standard applies to passenger cars, and to multipurpose passenger vehicles, trucks, and buses having a gross vehicle weight rating of 4536 kilograms or less. However, it does not apply to forward control vehicles, walk-in van-type vehicles, or to open-body type vehicles with fold-down or removable windshields.

* * * * *

S5. *Requirements.* When the vehicle travelling longitudinally forward at any speed up to and including 48 kilometers per hour impacts a fixed collision barrier that is perpendicular to the line of travel of the vehicle, under the conditions of S6, the windshield mounting of the vehicle shall retain not less than the minimum portion of the windshield periphery specified in S5.1 and S5.2.

* * * * *

S6.1 * * *

(b) Except as specified in S6.2, a multipurpose passenger vehicle, truck or bus is loaded to its unloaded vehicle weight, plus 136 kilograms or its rated cargo and luggage capacity, whichever is less, secured to the vehicle, plus a 50th-percentile test dummy as specified in part 572 of this chapter at each front outboard designated seating position and at any other position whose protection system is required to be tested by a dummy under the provisions of Standard No. 208. Each dummy is restrained only by means that are installed for protection at its seating position. The load is distributed so that the weight on each axle as measured at the tire-ground interface is in proportion to its GAWR. If the weight on any axle when the vehicle is loaded to its unloaded vehicle weight plus dummy weight exceeds the axle's proportional share of the test weight, the remaining weight is placed so that the weight on that axle remains the same. For the purposes of this section, unloaded vehicle weight does not include the weight of work-performing accessories. Vehicles are tested to a maximum unloaded vehicle weight of 2,495 kilograms.

* * * * *

S6.5 The windshield mounting material and all vehicle components in direct contact with the mounting material are at any temperature between −9 degrees Celsius and +43 degrees Celsius.

* * * * *

§ 571.216 [Amended]

20. Section 571.216 is amended by revising S3; revising S4; revising S5; revising in S6.2, paragraph (d); and revising S6.3 to read as follows:

§ 571.216 Standard No. 216, Roof crush resistance—passenger cars.

* * * * *

S3. *Application.* This standard applies to passenger cars, and to multipurpose passenger vehicles, trucks and buses with a GVWR of 2722 kilograms or less. However, it does not apply to—

(a) School buses;

(b) Vehicles that conform to the rollover test requirements (S5.3) of Standard No. 208 (§ 571.208) by means that require no action by vehicle occupants; or

(c) Convertibles, except for optional compliance with the standard as an alternative to the rollover test requirements in S5.3 of Standard No. 208.

S4. *Requirements.*

(a) *Passenger cars.* A test device as described in S5 shall not move more than 125 millimeters, measured in accordance with S6.4, when it is used to apply a force in newtons equal to 1½ times the unloaded vehicle weight of the vehicle, measured in kilograms and multiplied by 9.8 or 22,240 newtons, whichever is less, to either side of the forward edge of a vehicle's roof in accordance with the procedures of S6. Both the left and right front portions of the vehicle's roof structure shall be capable of meeting the requirements, but a particular vehicle need not meet further requirements after being tested at one location.

(b) *Multipurpose passenger vehicles, trucks and buses with a GVWR of 2,722 kilograms or less, manufactured on or after September 1, 1994.* For multipurpose passenger vehicles, trucks and buses with a GVWR of 2,722 kilograms or less, manufactured on or after September 1, 1994, a test device as

described in S5 shall not move more than 125 millimeters, measured in accordance with S6.4, when it is used to apply a force in newtons equal to 1½ times the unloaded vehicle weight of the vehicle, measured in kilograms and multiplied by 9.8, to either side of the forward edge of a vehicle's roof in accordance with the procedures of S6. Both the left and right front portions of the vehicle's roof structure shall be capable of meeting the requirements, but a particular vehicle need not meet further requirements after being tested at one location.

S5. *Test device.* The test device is a rigid unyielding block with its lower surface formed as a flat rectangle 762 millimeters × 1829 millimeters.

* * * * *

S6.2 * * *

(d) The initial contact point, or center of the initial contact area, is on the longitudinal centerline of the lower surface of the test device and 254 millimeters from the forwardmost point of that centerline.

6.3 (a) *Passenger cars.* Apply force in a downward direction perpendicular to the lower surface of the test device at a rate of not more than 13 millimeters per second until reaching a force in newtons of 1½ times the unloaded vehicle weight of the tested vehicle, measured in kilograms and multiplied by 9.8 or 22,240 newtons, whichever is less. Complete the test within 120 seconds. Guide the test device so that throughout the test it moves, without rotation, in a straight line with its lower surface oriented as specified in S6.2(a) through S6.2(d).

(b) *Multipurpose passenger vehicles, trucks and buses with a GVWR of 2,722 kilograms or less, manufactured on or after September 1, 1994.* For multipurpose passenger vehicles, trucks and buses with a GVWR of 2,722 kilograms or less, manufactured on or after September 1, 1994, apply force in a downward direction perpendicular to the lower surface of the test device at a rate of not more than 13 millimeters per second until reaching a force in newtons of 1½ times the unloaded vehicle weight of the tested vehicle, measured in kilograms and multiplied by 9.8. Complete the test within 120 seconds. Guide the test device so that throughout the test it moves, without rotation, in a straight line with its lower surface oriented as specified in S6.2(a) through S6.2(d).

* * * * *

21. Section 571.216, is amended by revising Figure 1 at the end of S6.4 to read as follows:

BILLING CODE 4910–59–P

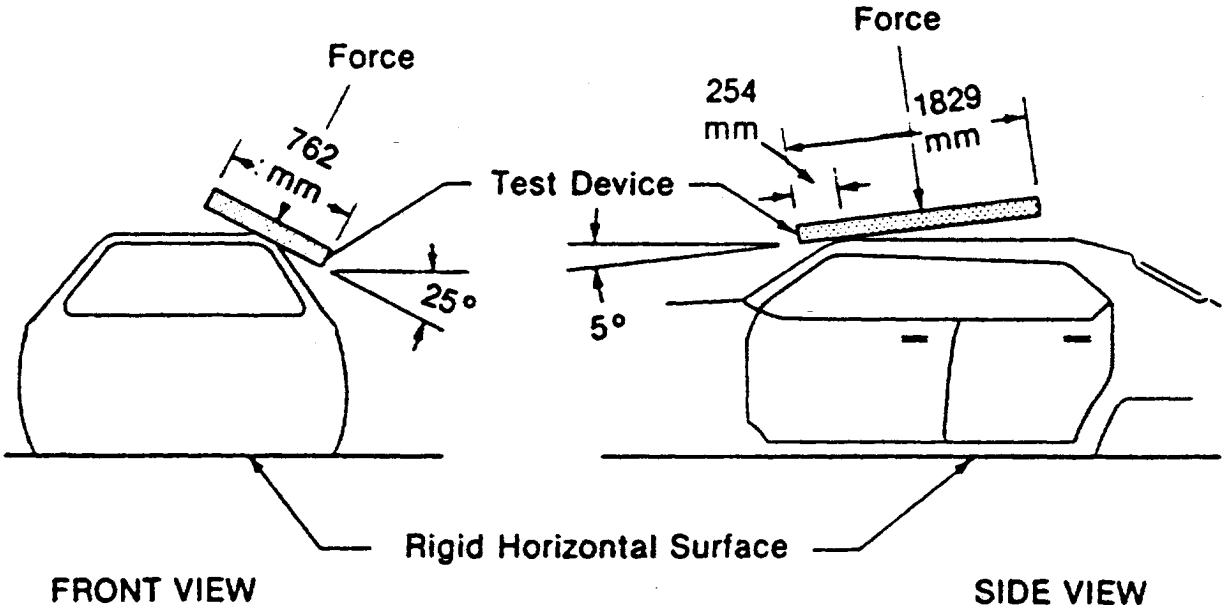

Figure 1.—Test Device Location And Application To The Roof

Issued on: March 8, 1995.

Ricardo Martinez,

Administrator.

[FR Doc. 95–6230 Filed 3–13–95; 8:45 am]

BILLING CODE 4910–59–C

Proposed Rules

Federal Register
Vol. 60, No. 49
Tuesday, March 14, 1995

This section of the FEDERAL REGISTER contains notices to the public of the proposed issuance of rules and regulations. The purpose of these notices is to give interested persons an opportunity to participate in the rule making prior to the adoption of the final rules.

DEPARTMENT OF AGRICULTURE

Rural Housing and Community Development Service

Rural Business and Cooperative Development Service

Rural Utilities Service

Consolidated Farm Service Agency

7 CFR Part 1940

RIN 0575–AB64

Environmental Program

AGENCIES: Rural Housing and Community Development Service, Rural Business and Cooperative Development Service, Rural Utilities Service, and Consolidated Farm Service Agency, USDA.

ACTION: Proposed rule.

SUMMARY: The Agencies propose to revise their Environmental regulation. This action is necessary to clarify the meaning of two existing sections. The intended effect of this action is to reorganize and supplement the existing sections to provide a better understanding of the threshold criteria used to differentiate between Class I and Class II environmental assessments.

DATES: Comments must be received on or before May 15, 1995.

ADDRESSES: Submit written comments in duplicate to the office of the Chief, Regulations, Analysis, and Control Branch, Rural Economic and Community Development, U.S. Department of Agriculture, Room 6348, South Agriculture Building, 14th Street and Independence Avenue SW., Washington, D.C. 20250–0700.

FOR FURTHER INFORMATION CONTACT: Donald O. Lander, Senior Environmental Protection Specialist, Environmental Support Branch, Program Support Staff, Rural Housing and Community Development Service, U.S. Department of Agriculture, Room 6309, South Agriculture Building, 14th Street and Independence Avenue SW., Washington, D.C. 20250–0700; telephone (202) 720–9619.

SUPPLEMENTARY INFORMATION:

Classification

We are issuing this proposed rule in conformance with Executive Order 12866, and the Office of Management and Budget (OMB) has determined that it is a ''significant regulatory action''.

Intergovernmental Consultation

This rule affects the following Agency programs as listed in the Catalog of Federal Domestic Assistance (CFDA):

10.434—Nonprofit National Corporations Loan and Grant Program
10.760—Water and Waste Disposal Systems for Rural Communities
10.761—Technical Assistance and Training Grants
10.762—Solid Waste Management Grants
10.763—Emergency Community Water Assistance Grants
10.766—Community Facilities Loans
10.767—Intermediary Relending Programs
10.768—Business and Industrial Loans
10.769—Rural Business Enterprise and Television Demonstration Grants
10.770—Water and Waste Disposal Loans and Grants (Section 306C)
10.771—Rural Technology Development Grants

Executive Order 12372 requires intergovernmental consultation with State and local officials. Of the FmHA programs affected by this rule, the following are subject to the provisions of Executive Order 12372: 10.760, 10.763, 10.766, 10.767, 10.768, 10.769, 10.770, and 10.771.

Regulatory Flexibility Act

In compliance with the Regulatory Flexibility Act (5 U.S.C. 601–602), the undersigned has determined and certified by signature of this document that this rule will not have a significant economic impact on a substantial number of small entities since this rulemaking action does not involve a new or expanded program. Therefore a regulatory flexibility analysis was not prepared.

Civil Justice Reform

This document has been reviewed in accordance with Executive Order 12778. It is the determination of the Agencies that this action does not unduly burden the Federal Court System in that it meets all applicable standards provided in Section 2 of the Executive Order.

Environmental Impact Statement

This document has been reviewed in accordance with 7 CFR part 1940, subpart G, ''Environmental Program.'' The Agencies have determined that this action does not constitute a major Federal action significantly affecting the quality of the human environment, and in accordance with the National Environmental Policy Act of 1969, Public Law 91–190, an Environmental Impact Statement is not required.

Paperwork Reduction Act

The information collection requirements contained in this regulation have been approved by the Office of Management and Budget (OMB) under the provisions of 44 U.S.C. Chapter 35 and has been assigned OMB control number 0575–0094 in accordance with the Paperwork Reduction Act of 1980 (44 U.S.C. 3507). This proposed rule does not revise or impose any new information collection or recordkeeping requirement from those approved by OMB.

Background

Section 1940.311 describes certain threshold criteria for projects which may complete an environmental review using the format for a Class I environmental assessment.

In § 1940.311(b)(1)(i) there has been confusion as to what constitutes a ''substantial increase'' relating to a withdrawal or discharge. This confusion has resulted in the unnecessary completion of Class II environmental assessments for some utility projects.

The regulation will be revised to clarify this section by distinguishing between discharges and withdrawals, and to provide guidance relating to substantial increases.

In § 1940.311(b)(1)(ii) there has been confusion about interpreting the withdrawal rate to achieve a 50,000 gallon per day withdrawal from surface or groundwater for a new withdrawal facility. A common engineering practice is to design the pumping facility to achieve the average daily withdrawal in less than a 24 hour period to provide an adequate safety factor. However, some loan officials calculate the withdrawal based on pumping the source including any backup source on a 24 hour basis. This results in completion of a higher level of environmental review than is required.

The regulation is proposed to be revised to clarify this section by changing the unit of measurement from gallons per day, to an equivalent population served. This will eliminate the confusion, and should not result in a change to the threshold as the present threshold of 50,000 gallons per day for a new withdrawal is based on EPA's definition of Very Small Water Systems, ''systems serving up to 500 people.'' Based on an average daily demand of 100 gallons per day per capita, the average daily withdrawal for very small systems will be 50,000 gallons per day.

To be consistent, the equivalent population will also be used for discharges.

Section 1940.311(b)(1)(v) will also be revised to remove the apparent conflict created by the revision to § 1940.311(b)(1)(ii).

In § 1940.311(b)(2) there has been confusion about the number of beds which may be added to an existing facility. This confusion has resulted in the unnecessary completion of Class II environmental assessments for some essential community facility projects.

The regulation is proposed to be revised to clarify this section by separately specifying the number of beds for new and existing projects.

In § 1940.311(b)(3)(iii) there has been confusion about whether medical waste is considered to be a hazardous waste. This confusion has resulted in the unnecessary completion of Class II environmental assessments for some essential community facility projects.

The regulation is proposed to be revised to clarify this section by adding a new section that will deal specifically with medical wastes.

List of Subjects in 7 CFR Part 1940

Endangered and threatened wildlife, Environmental protection, Floodplains, National wild and scenic river system, Natural resources, Recreation, Water supply.

Accordingly, the Agencies propose to amend Chapter XVIII, Title 7, Code of Federal Regulations as follows.

PART 1940—GENERAL

1. The authority citation for part 1940 continues to read as follows:

Authority: 7 U.S.C. 1989; 42 U.S.C. 1480; 5 U.S.C. 301; 7 CFR 2.23 and 2.70.

Subpart G—Environmental Program

2. Section 1940.311 is amended by redesignating paragraph (b)(3)(iii) as (b)(3)(iv); revising paragraphs (b)(1)(i), (b)(1)(ii), (b))(1)(v), and (b)(2); and adding a new paragraph (b)(3)(iii) to read as follows:

§ 1940.311 Environmental assessments for Class I actions.

* * * * *

(b) * * *

(1) * * *

(i) For existing Systems, there will not be either:

(A) A substantial increase in the volume of an existing discharge or the loading of pollutants from an existing or expanded sewage treatment facilities, *or*

(B) A substantial increase in an existing withdrawal from surface or ground waters.

(C) The existence of a substantial increase will depend on the particulars of the situation under consideration. Each proposal should be examined for the possibility of a substantial increase in discharge or withdrawal. A substantial increase may or may not be determined by such factors as: evidence of a large increase in pump or pipe size, other evidence of a large increase in hydraulic capacity, or the need for a new or amended discharge or withdrawal permit. Whatever factors are considered, the rationale behind the decision should be documented as part of the Class I assessment.

(ii) For all systems (existing and new), there will not be either:

(A) A new discharge to surface or ground waters, such that the additional design capacity of the facility exceeds the average daily discharge of an equivalent population of 500 persons, *or*

(B) A new withdrawal from surface or ground waters such that the additional design capacity of the facility exceeds the demand needed to serve an equivalent population of 500 persons, and

(C) The potential water quality impacts are analyzed and documented in the manner required for a Class II assessment and attached as an exhibit to the Class I assessment.

(D) A new well solely to provide ''backup'' capacity, required by a State regulatory agency or standard engineering practice, is not considered a new withdrawal.

* * * * *

(v) For a proposed expansion of a sewage treatment or water supply facility, such expansion would serve an equivalent population that is no more than 20 percent or 500 persons (whichever is the larger) greater than the existing population.

* * * * *

(2) Financial assistance for existing group homes, detention facilities, nursing homes, or hospitals that add no more than 25 beds or increase the number of beds by no more than 25 percent, whichever is greater, or new facilities of not more than 25 beds.

(3) * * *

(iii) Do not produce infectious, medical, biological, or special medical wastes (including radiological waste of medical origin) that would exceed small quantity generator limits as established by the appropriate regulatory agency, and provided the facility's management plan is reviewed to ensure compliance with the regulatory agency requirements. The management plan should include standard operating procedures for notification, permitting, and recordkeeping requirements as well as handling, storage, packaging, and disposal of infectious waste materials. Documentation of the compliance review must be attached as an exhibit to the Class I assessment.

* * * * *

Dated: February 27, 1995.

Michael V. Dunn

Acting Under Secretary for Rural Economic and Community Development.

[FR Doc. 95–6228 Filed 3–13–95; 8:45 am]

BILLING CODE 3410–17–U

DEPARTMENT OF ENERGY

Federal Energy Regulatory Commission

18 CFR Part 154, 158, 201, 250, and 284

[Docket No. RM95–3–000; Rm95–4–000]

Filing and Reporting Requirements for Interstate Natural Gas Company Rate Schedules and Tariffs; Revisions to Uniform System of Accounts Forms, Statements, and Reporting Requirements for Natural Gas Companies; Notice of Informal Technical Conference

March 8, 1995.

AGENCY: Federal Energy Regulatory Commission.

ACTION: Proposed rule; notice of informal technical conference.

SUMMARY: The Federal Energy Regulatory Commission will hold an informal technical conference pursuant to the Notices of Proposed Rulemaking issued on December 16, 1994, in Docket Nos. RM95–3–000 and RM95–4–000. The conference is a preliminary step in the process of modifying the electronic filing requirements to complement the proposed revisions to the regulations set forth in the December 16, 1994 notices.

DATES: Tuesday and Wednesday, April 4 and 5, 1995: 9:00 a.m.

ADDRESSES: Federal Energy Regulatory Commission, 810 First Street, NE., Washington, DC 20426.

FOR FURTHER INFORMATION CONTACT: Richard A. White, Office of the General Counsel, Federal Energy Regulatory Commission, 825 North Capitol Street, NE., Washington, DC 20426, (202) 208–0491.

SUPPLEMENTARY INFORMATION: In addition to publishing the full text of this document in the **Federal Register**, the Commission also provides all interested persons an opportunity to inspect or copy the contents of this document during normal business hours in Room 3104, 941 North Capitol Street, NE., Washington, DC 20426.

The Commission Issuance Posting System (CIPS), an electronic bulletin board service, provides access to the texts of formal documents issued by the Commission. CIPS is available at no charge to the user and may be accessed using a personal computer with a modem by dialing (202) 208–1397. To access CIPS, set your communications software to 19200, 14400, 12000, 9600, 7200, 4800, 2400, 1200, or 300 bps, full duplex, no parity, 8 data bits, and 1 stop bit. The full text of this rule will be available on CIPS for 60 days from the date of issuance in ASCII and WordPerfect 5.1 formats. After 60 days, the rule will be archived, but still accessible. The complete text on diskette in Wordperfect format may also be purchased from the Commission's copy contractor, La Dorn Systems Corporation, also located in Room 3104, 941 North Capitol Street, NE., Washington, DC 20426.

Take notice that on Tuesday, April 4, 1995 and, if necessary, Wednesday, April 5, 1995, an informal technical conference will be convened to begin designing modifications to the electronic filing requirements necessitated by proposed Rulemaking issued on December 16, 1994, in Docket Nos. RM95–3–000 and RM95–4–000,[1] the Commission directed its Staff to convene a technical conference to obtain the participation of the industry and others for this purpose.

The conference is a preliminary step in the process of modifying the Commission's electronic filing requirements to complement the proposed revisions to the regulations set forth in the December 16, 1994 notices.

Objectives to be achieved by modifying the electronic filing requirements include:

- To employ user-friendly form fill, word processing, or spreadsheet applications as much as possible.
- To minimize the burden of the reporting requirements for regulated entites.
- To eliminate unnecessary processing steps by the Commission and the companies.
- To facilitate access to the information by the public.
- To the greatest extent possible, electronic data should be capable of being linked to related data in other filings.
- To ensure that electronically submitted data contains the same information as the paper copy of the filing.
- To ensure that electronic data can be easily correlated with the data in the paper filing.
- To ensure that all spreadsheets contain the underlying formulae and links.

The specific objectives of this conference are:

- To provide a form within which Staff can gain a better understanding of how the industry stores and processes the data required in the Commission's forms and filings.
- To determine the most efficient electronic means for the preparation and submittal of data.
- To determine the most efficient electronic means for the dissemination of data to the public.
- To determine whether additional conferences are desirable; and, if so, the format, agenda, and dates.

In light of these objectives, Commission Staff anticipates considering the following topics at the conference:

- An appropriate filing format for each type of submittal.
- How companies store data (mainframe, PCs, paper only) that the Commission proposes to be filed electronically.
- How companies prepare Form 2, Form 11, discount rate reports, index of customers, and section 4 rate cases (using commercial software, proprietary software, spreadsheets, databases, wordprocessing software). Whether companies use different hardware and software for different parts of the submittal. What spreadsheet, database, and wordprocessing software is used predominantly.
- Those aspects of the Commission's current electronic filing requirements that should not be changed.
- The use of form fill software for submitting each filing.
- Whether the Commission's form fill software for submitting FERC Form No. 1 would be useful for submitting other filings. (The Commission's form fill software for submitting FERC Form No. 1 is available on the Commission Issuance Posting System (CIPS) under option ''FERC Form No. 1 Forum.'' The bulletin board number is (202) 208–1397.)
- What information from electronic filings should be accessible to the public. In what form would such data be most useful (spreadsheet, database, wordprocessing, ASCII).
- Transmission of electronic data to the Commission through telecommunication.
- Any special concerns of state commissions, small businesses, customers, consumer groups, and nonindustry users of electronically filed data.
- Participants should also be prepared to discuss any other relevant matter.

Commission Staff is currently preparing an agenda for the conference. In order that the conference be as productive as possible, Staff invites comments on the goals, issues, and topics of discussion. Such comments should be addressed to Richard A. White, Office of the General Counsel, Federal Energy Regulatory Commission, 825 North Capitol Street, NE., Washington, DC 20426, (202) 208–0491. Comments should be received by March 28, 1995. Commenters are encouraged to submit comments on a 3½ inch diskette in ASCII format.

The conference will begin at 9:00 a.m. on April 4, 1995, in a hearing or conference room of the Federal Energy Regulatory Commission, 810 First Street, NE., Washington, DC 20426. The conference room will be designated in a subsequent notice. All interested persons are invited to attend.

Lois D. Cashell,

Secretary.

[FR Doc. 95–6168 Filed 3–13–95; 8:45 am]

BILLING CODE 6717–01–M

[1] Published in the **Federal Register** on January 13, 1995 at 60 FR 3111 and 3141, respectively.

DEPARTMENT OF THE INTERIOR

Minerals Management Service

30 CFR Part 254

Response Plans for Facilities Seaward of the Coast Line

AGENCY: Minerals Management Service, Interior.

ACTION: Notice of extension of public comment period.

SUMMARY: This notice extends, by 62 days, the comment period for a notice of proposed rulemaking (NPR) that the Minerals Management Service published in the **Federal Register** on January 13, 1995. The NPR is concerned with requirements for spill-response plans for oil handling facilities located seaward of the coast line.

DATES: The comment period is extended to May 15, 1995. Comments should be received or postmarked by that date.

ADDRESSES: Comments should be mailed or hand delivered to the Department of the Interior, Minerals Management Service, Mail Stop 4700; 381 Elden Street; Herndon, Virginia 22070–4817; Attention: Chief, Engineering and Standards Branch.

FOR FURTHER INFORMATION CONTACT: John Mirabella or Lawrence Ake, Engineering and Standards Branch, telephone (703) 787–1600.

Dated: March 7, 1995.

Thomas Gernhofer,

Associate Director for Offshore Minerals Management.

[FR Doc. 95–6184 Filed 3–13–95; 8:45 am]

BILLING CODE 4310–MR–M

DEPARTMENT OF TRANSPORTATION

Coast Guard

33 CFR Part 117

[CGD13–93–031]

Drawbridge Operation Regulation; Columbia River, OR and WA

AGENCY: Coast Guard, DOT.

ACTION: Supplemental notice of proposed rulemaking.

SUMMARY: This notice supplements a notice of proposed rulemaking concerning the drawbridge operation regulations for the twin Interstate 5 drawbridges across the Columbia River, mile 106.5, between Portland, Oregon, and Vancouver, Washington. Previous notices of proposed rulemaking which proposed the extension of the morning and afternoon time periods when the bridge need not open did not contain language needed to distinguish the proposed rule's applicability to commercial and noncommercial vessels. This supplemental notice adds the omitted language and clearly states the proposed rule's applicability by vessel type and river flow conditions.

DATES: Comments must be received on or before May 15, 1995.

ADDRESSES: Comments should be mailed to Commander (oan), Thirteenth Coast Guard District, 915 Second Avenue, Seattle, Washington 98174–1067. The comments and other materials referenced in this notice will be available for inspection and copying at 915 Second Avenue, Room 3410, Seattle, Washington. Normal office hours are between 7:45 a.m. and 4:15 p.m., Monday through Friday, except holidays. Comments may also be hand-delivered to this address.

FOR FURTHER INFORMATION CONTACT: John E. Mikesell, Chief, Plans and Programs Section, Aids to Navigation and Waterways Management Branch, (Telephone: (206) 220–7272).

SUPPLEMENTARY INFORMATION:

Request for Comments

The Coast Guard encourages interested persons to participate in this rulemaking by submitting written data, views, and arguments. Persons submitting comments should include their names and addresses, identify this notice, specify the section of this notice to which each comment applies, and give the reason for each comment. Two copies of each comment should be provided in an unbound format. All comments should be on paper no larger than 8½ by 11 inches and should be suitable for copying and electronic filing. Persons wanting acknowledgment of receipt of comments should enclose stamped, self-addressed postcards or envelopes.

The proposed regulations may be changed in light of comment received. All comments received before the expiration of the comment period will be considered before final action is taken on this proposal.

The Coast Guard plans no public hearings. Persons may request a public hearing by writing to the above address. The request should include the reasons why a hearing would be beneficial. If the Coast Guard determines that the opportunity for oral presentation will aid this rulemaking, it will hold a public hearing at a time and place announced by a later notice in the **Federal Register**.

Drafting Information: The principal persons involved in drafting this document are John E. Mikesell, Chief, Plans and Programs Section, Aids to Navigation and Waterways Management Branch, Thirteenth Coast Guard District, Seattle, WA, and LCDR John Odell, project attorney, Thirteenth Coast Guard District Legal Office, Seattle, WA.

Background and Purpose

This notice proposes drawbridge operation regulations for the twin Interstate 5 drawbridges across the Columbia River, mile 106.5, between Portland, Oregon, and Vancouver, Washington. The proposed rule would extend the morning and afternoon time periods when the draws of the bridges need not open for the passage of vessels while delineating clear exceptions based on the river flow conditions and the type of vessel traffic involved.

Regulatory History

This notice is the second supplemental notice of proposed rulemaking published for this proposed rule. The original notice of proposed rulemaking, published in the **Federal Register** on November 26, 1993 (58 FR 62302), proposed an extension of the morning and afternoon time periods when the draws need not open for the passage of vessels without regard to vessel type or river flow condition. A supplemental notice, published in the **Federal Register** on October 4, 1994 (59 FR 50531), provided for relatively uninterrupted vehicular flow during peak traffic times while being less restrictive to vessel traffic by adding provisions which would apply during periods of high river flow conditions. However, that first supplemental notice of proposed rulemaking omitted language distinguishing the rule's applicability to commercial and noncommercial vessels. This second supplemental notice of proposed rulemaking adds the language to clearly state the proposal's applicability to commercial and noncommercial vessel traffic.

Discussion of Proposed Regulation

The twin Interstate 5 vertical lift bridges across the Columbia River between Portland, Oregon, and Vancouver, Washington, are currently required to open on signal, except that from 6:30 a.m. to 8:00 a.m. and from 3:00 p.m. to 6:00 p.m., Monday through Friday (except Federal holidays), the draws need not open. These closed periods are necessary to accommodate peak morning and afternoon vehicular commute traffic across the bridges. Both bridges also provide alternate mid-level fixed spans which provide greater vertical clearance than do the drawspans in the closed position. The alternate fixed spans are routinely used by tug and barge traffic except at higher water surface elevations. Because the number of vehicles crossing the interstate bridges has increased dramatically, particularly during commute times, any opening in close proximity to these commute times, before or after, results in unacceptable vehicular traffic delays. Therefore, Oregon State Department of Transportation (ORDOT) has requested an extension of the weekday closed periods.

Subsequent to publication of a previous supplemental notice of proposed rulemaking on October 4, 1994 (59 FR 50531), the Coast Guard recognized the need for clarification concerning the rule's applicability to commercial and noncommercial vessels. After reevaluation, the Coast Guard determined that the proposed rule's provisions for high water conditions (when the river gauge indicates 6.0 feet or more) were only required in order to meet the reasonable needs of commercial vessel traffic. The needs of noncommercial vessel traffic will be adequately met during high water conditions despite the extended closed periods.

Therefore, based on this reevaluation, this second notice of proposed rulemaking further amends the proposed rule, making the high water provisions applicable only to commercial vessels. During low water

conditions (when the river gauge indicates 5.9 feet or less), the proposed extended periods when the bridges need not open for the passage of vessels will apply to both commercial and noncommercial vessels.

Regulatory Evaluation

This proposal is not a significant action under section 3(f) of Executive Order 12866 and does not require an assessment of potential costs and benefits under section 6(a)(3) of that order. It has been exempted form review by the Office of Management and Budget under that order. It is not significant under the regulatory policies and procedures of the Department of Transportation (DOT) (44 FR 11040; February 26, 1979).

The Coast Guard expects the economic impact of this proposal to be so minimal that a full regulatory evaluation under paragraph 10e of the regulatory policies and procedures of DOT is unnecessary. Most waterway traffic can be accommodated by the alternate fixed span channel. For the benefit of commercial vessels, the proposed rule would revert to its previous, less-restrictive form when the vertical clearance under the alternate fixed span was less than 52 feet.

Small Entities

Under the Regulatory Flexibility Act (5 U.S.C. 601 *et seq.*), the Coast Guard must consider whether this proposal will have a significant economic impact on a substantial number of small entities. ''Small entities'' include independently owned and operated small businesses that are not dominant in their field and that otherwise qualify as ''small business concerns'' under section 3 of the Small Business Act (15 U.S.C. 632). Because the impacts of this proposal are expected to be minimal, the Coast Guard certifies under section 605(b) of the Regulatory Flexibility Act (5 U.S.C. 601 *et seq.*) that this proposal will not have a significant impact on a substantial number of small entities.

Federalism

The Coast Guard has analyzed this action in accordance with the principles and criteria contained in Executive Order 12612 and has determined that this proposal does not have sufficient federalism implications to warrant the preparation of a federalism assessment.

Environment

The Coast Guard considered the environmental impact of this proposed regulation and concluded that, under paragraph 2.B.2 of Commandant Instruction M16475.1B (as revised by 59 FR 38654; July 29, 1994), this proposed regulation is categorically excluded from further environmental documentation. An environmental checklist and categorical exclusion determination have been completed for this proposed action and have been included in the rulemaking docket.

List of Subjects in 33 CFR Part 117

Bridges.

Proposed Regulations

For the reasons set out in the preamble, the Coast Guard proposes to amend Part 117 of Title 33, Code of Federal Regulations as follows:

PART 117—DRAWBRIDGE OPERATION REGULATIONS

1. The authority citation for Part 117 continues to read as follows:

Authority: 33 U.S.C. 499; 49 CFR 1.46; 33 CFR 1.05–1(g); section 117.255 also issued under the authority of Pub. L. 102–587, 106 Stat. 5039.

2. In § 117.869, paragraph (a) is revised to read as follows:

§ 117.869 Columbia River.

(a) The draws of the Interstate 5 highway bridge, mile 106.5, between Portland, OR, and Vancouver, WA, shall open on signal, except that:

(1) When the river gauge at the bridge indicates 6.0 feet, or more, as determined by the drawtender on duty, the draws need not open for the passage of commercial vessels from 6:30 a.m. to 8:00 a.m. and from 3:30 p.m. to 6:00 p.m. Monday through Friday, except Federal holidays, and for all other vessels the draws need not open from 5:30 a.m. to 9:00 a.m. and from 2:30 p.m. to 6:00 p.m. Monday through Friday, except Federal holidays.

(2) When the river gauge at the bridge indicates 5.9 feet, or less, as determined by the drawtender on duty, the draws need not open for the passage of any vessels from 5:30 a.m. to 9:00 a.m. and from 2:30 p.m. to 6:00 p.m. Monday through Friday, except Federal holidays.

* * * * *

Dated: February 28, 1995.

John A. Pierson,

Captain, U.S. Coast Guard, Commander, 13th Coast Guard District, Acting.

[FR Doc. 95–6152 Filed 3–13–95; 8:45 am]

BILLING CODE 4910–14–M

DEPARTMENT OF DEFENSE

Department of the Army

Corp of Engineers

33 CFR Parts 320, 325 and 333

Wetland Delineator Certification Program

AGENCY: Army Corps of Engineers, DOD.

ACTION: Proposed rule.

SUMMARY: The U.S. Army Corps of Engineers (Corps) is establishing a program for the training and certification of individuals as wetland delineators. The intent of the Wetland Delineator Certification Program (WDCP) is: (1) To improve the quality and consistency of wetland delineations submitted to the Corps, and (2) to streamline the regulatory process by developing procedures for expediting review and consideration of delineations submitted by certified delineators. We are publishing this proposed rule today to provide the public the opportunity to assist us in the development of the WDCP.

DATES: Written comments must be submitted on or before April 13, 1995.

ADDRESSES: Written comments must be submitted to: The Chief of Engineers, United States Army Corps of Engineers. ATTN: Ms. Karen Kochenbach, CECW–OR, Washington, DC 20314–1000.

FOR FURTHER INFORMATION CONTACT: Ms. Karen Kochenbach or Mr. Sam Collinson at the Office of the Chief of Engineers at (202) 272–0199.

SUPPLEMENTARY INFORMATION:

Background

The Corps regulates activities involving the discharge of dredged or fill material into waters of the United States, including wetlands, pursuant to Section 404 of the Clean Water Act (CWA). In accordance with Section 307(e) of the Water Resources Development Act of 1990 (WRDA 90), the Corps is establishing the WDCP. Section 307 (e) of WRDA 90 authorizes the Secretary of the Army to establish a program for the training and certification of individuals as wetland delineators. Pursuant to this authority, the Corps conducted demonstration projects in the Baltimore, Jacksonville, and Seattle districts.

The Wetland Delineator Certification Program (WDCP) was initially announced in the **Federal Register** on December 30, 1992 (57 FR 62312). This notice introduced the WDCP and provided specifics on participation in the three demonstration projects. On

April 16, 1993, we published a second announcement in the **Federal Register** (58 FR 19806) concerning the availability of draft training materials developed for the WDCP. Corps districts nationwide issued public notices concurrently with these notices, and numerous publications chose to include brief articles in their professional journals on the WDCP.

The concept of providing expedited acceptance of wetland delineations by consultants and contractors similar to the goals of the WDCP has previously been informally implemented by a few Corps districts on a limited basis. In those cases, the Corps districts established informal procedures for expeditious review and acceptance of wetland delineations performed by qualified individuals. Like those informal approaches, there will be no requirement for wetland delineators to be certified under the WDCP in order to submit wetland delineations to the Corps; however, the Corps will handle wetland delineations performed by wetland delineators it has certified more expeditiously. Corps districts will retain discretion regarding the acceptance of wetland delineations, including those accomplished by certified delineators. The WDCP will affect the Corps', U.S. Environmental Protection Agency's (EPA), or U.S. Department of Agriculture Natural Resources Conservation Service's (NRCS, formerly the Soil Conservation Service (SCS)) authority to determine jurisdiction for purposes of Section 404 of the CWA, but is intended to provide expedited service to the public, while improving the accuracy and consistency of wetland delineations submitted to the Corps by consultants and contractors. The development of this program is also a component of the Administration's August 24, 1993 Wetlands Plan entitled ''Protecting America's Wetlands: A Fair, Flexible, and Effective Approach.''

Wetland Delineation Manual

The four Federal agencies responsible for making wetland delineations (i.e., the Corps, EPA, NRCS, and the U.S. Department of Interior Fish and Wildlife Service (FWS) currently utilize the 1987 Corps of Engineers Wetland Delineation Manual (1987 Manual) for identifying and delineating wetlands for purposes of Section 404 of the CWA. As noted in the Administration's Wetlands Plan, the agencies will continue to use the 1987 Manual pending completion of an on-going study of the National Academy of Sciences (NAS) Committee on Wetlands Characterization. The four Federal agencies noted above will review the results of the NAS study, which is scheduled for completion at the end of 1994, and determine if modifications to the 1987 Manual are necessary. Certification under the WDCP will be based on demonstrated abilities for delineating wetlands using the current Federal wetland delineation methodology in use at the time of certification.

Copies of the 1987 Manual are available from the National Technical Information Service (NTIS), 5285 Port Royal Road, Attn: Order Department, Springfield, Virginia 22171. Document #ADA 176 734, Phone #(703) 487–4650. Copies of the supplemental guidance issued by the Corps concerning use of the 1987 Manual (i.e., the October 7, 1991, Questions and Answers, and the March 6, 1992, Clarification and Interpretation memorandum) as well as the Administration's Wetlands Plan of August 24, 1993, may be obtained by contacting the Regulatory Branch of your local Corps district, the EPA Wetlands Hotline at (800) 832–7828, or the Regulatory Branch of Corps Headquarters (Office of the Chief of Engineers) at (202) 272–0199.

Current Practices/Past Problems

On the average, the Corps makes a total of 30,000 jurisdictional determinations a year, many of which involve wetlands subject to regulation under Section 404 of the CWA. Jurisdictional determinations are determinations that a wetland and/or waterbody is subject to regulatory jurisdiction under Section 404 of the Clean Water Act or Sections 9 and 10 of the Rivers and Harbors Act of 1899. While the Corps will conduct a wetland delineation if requested to do so, many applicants choose to hire the services of a consulting firm to perform wetland delineations on their behalf. Because of delineation backlogs in many Corps districts, this approach can expedite the wetland delineation review process. However, the Corps routinely receives inaccurate and inconsistent wetland delineations from applicants and/or their representatives which nessitate modification(s) or redelineation(s). When this occurs, the Corps must spend a greater amount of time in making a determination of wetlands jurisdiction. By relying more on private sector delineations the Corps will be able to more efficiently utilize its limited staff for permit evaluations and compliance.

Although many districts have internal procedures currently in use to determine competent wetland delineators, the Corps has not had one uniform process for evaluating the demonstrated competence of wetland delineators during its review of wetland delineations. It has been our experience that wetland delineators who are properly trained and experienced in the current Federal wetland delineation methodology perform wetland delineations that are more accurate and consistent. Consequently, these delineations require the Corps to spend less time reviewing them for accuracy. These time savings are vital because Corps districts spend a considerable amount of resources reviewing and performing wetland delineations, whether delineations are made on-site (based on a site visit) or off-site (based on an office determination utilizing exiting available information, such as National Wetlands Inventory maps and aerial photography).

We are aware that application of any wetland delineation methodology by persons who lack the requisite scientific and technical knowledge, has the potential to result in inaccurate or inconsistent wetland delineations. However, we anticipate that wetland delineations performed by certified delineators will be of higher quality and greater consistency, thereby allowing for an expedited wetland delineation review process.

Other organizations have or will be developing certification programs in wetland science (e.g., the Society of Wetland Scientists), and several States are also considering implementing certification programs related to wetlands. The WDCP is a separate and distinct program for wetland delineators who perform and submit wetland delineations to the Corps, and has no relationship to, nor reciprocity with, other certification programs currently in existence.

Federal Government Certification

The four Federal agencies primarily involved in wetland delineations and Section 404 of the CWA (i.e., Corps, EPA, FWS, and NRCS) have participated in interagency wetland delineation training since 1989. The Corps manages this training, and experienced delineators from the four agencies serve as instructors. The course is continuously revised as necessary to ensure that Federal agency personnel are presented with the current Federal wetland delineation methodologies. Additionally, Corps, EPA, FWS, and NRCS wetland delineators receive on-the-job training and gain valuable field experience during the daily implementation of their wetland programs. The agencies recognize the need to ensure that employees who perform and/or verify wetland delineation possess the necessary training experience. To facilitate the

goal of consistency in the identification and delineation of wetlands, the Corps continues to work with EPA, NRCS, and FWS to improve its training programs and field staff capabilities, as included in the Administration's Wetlands Plan. The Corps, based on these proposed regulations, will require completion of the interagency wetland delineation training course (i.e., Regulatory IV), in addition to two (2) years experience and an internal evaluation of knowledge and abilities of its field staff responsible for making jurisdictional determinations in wetlands, equivalent to the requirements of certified delineators. Consistent with the intent of the WDCP, Federal agencies which submit wetland delineations to the Corps (e.g., the Federal Highway Administration), may benefit from being certified by the Corps through the WDCP.

Demonstration Program

The purpose of the demonstration program of the WDCP was to determine the appropriate level of wetland delineation capabilities which should be required of individuals in order to receive expedited review and consideration of their wetland delineations by the Corps. In addition, the demonstration program was used to test draft written tests and field practicums, assess individuals' wetland delineation capabilities, and receive feedback on the training package designed for use by certified wetland delineators in the training of others in the current Federal wetland delineation methodologies. Provisional certification was awarded to those WDCP participants successfully completing the two-part test, pending the adoption of final regulations that will result from the evaluation of comments received on the regulation proposed today.

The WDCP demonstration program involved projects in three Corps districts, and began in March, 1993. The WDCP was initially announced December 30, 1992 in the **Federal Register**, in addition to district public notices. The projects took place in the States of: Washington, Maryland, and Florida, administered by the Seattle, Baltimore, and Jacksonville Districts, respectively, although participation was not limited to applicants within the districts' boundaries. Applications for provisional certification are no longer being accepted; districts have completed the testing and evaluation of over 200 WDCP applicants. There were no prerequisites nor fees charged for participation in the demonstration projects. Because we believe that provisionally certified individuals have demonstrated adequate wetland delineation knowledge and ability, it is our intention to consider provisionally certified individuals as certified wetland delineators under the final WDCP, pending adoption of these regulations. The provisional certifications will remain valid until a final rule is adopted for the WDCP.

Written Test

The written tests used by the three demonstration districts were developed from the pool of questions used in the Federal interagency wetland delineation training (Regulatory IV), and are based on the current Federal wetland delineation methodology (i.e., the 1987 Manual), related technical guidance, and other wetland concepts covered in the Regulatory IV training (e.g., soil taxonomy). Each demonstration district prepared a written test from the pool of these multiple choice questions. Over the years, the Corps has added, deleted, and/or modified questions in the pool used in its wetland delineation training to remain consistent with the current Federal wetland delineation methodology. The passing score for the written exam administered during the demonstration projects was 80%. We believe that proper training is essential to the competency of wetland delineators, and the Corps tests are designed to evaluate such training. We invite comments on this testing approach, as well as comments on the tests, from those who have participated in the demonstration program. We intend to standardize the written tests for administration nationwide in the final WDCP.

Field Practicum

A field practicum was also administered by the demonstration districts to those who successfully completed the written test. Like the written test, the field practicum required WDCP applicants to have an understanding of the three parameters used in wetlands delineation (i.e., hydrophytic vegetation, hydric soils, and wetland hydrology), and the procedures utilized to assess these characteristics consistent with the 1987 Manual. During the field practicums, participants were required to document the presence or absence of field indicators for each of the three parameters by using data sheets to record field observations, and by providing written explanations supporting their conclusions. Eighty percent (80%) was also the passing score for the field practicum. We believe that WDCP field practicums must be procedurally and fundamentally the same from Corps district to Corps district, and will standardize the practicum used during the demonstration phase prior to nationwide implementation.

Administration of the field practicum during the demonstration program was influenced to some degree by the weather (e.g., snow in Baltimore in March). We welcome comments on the consideration of limiting these tests to the time period as determined by appropriate by the districts, for example, the local growing season. Comments on the field practicum are requested from those individuals who participated in the demonstration program, and any recommendations for modifications or other procedures that can be consistently administered in all districts will be considered.

Results

Results of the demonstration program are provided in Table 1 below. Overall, more than 3,000 WDCP information/application packages were mailed to prospective applicants by the three demonstration districts in response to public requests. Over 1500 applications were submitted, and all were provided the opportunity to take the written exam. Of the more than 900 that did so, fewer than 400 WDCP applicants passed the written test. All of the individuals who passed the written test took the field practicum, and over 85% passed. Currently there are almost 350 provisionally certified wetland delineators nationwide. Until certification is defined through the adoption of final regulations, and individuals are certified under the final WDCP, the names of provisionally certified individuals will not be released by the Corps.

TABLE 1.—SUMMARY OF WDCP DEMONSTRATION PROGRAM RESULTS

No. of individuals	Baltimore	Jacksonville	Seattle	Totals
Applied for participation	496	501	642	1,639
Took written test	386	347	174	907
Passed written test	184 (48%)	148 (43%)	61 (35%)	393 (43%)

TABLE 1.—SUMMARY OF WDCP DEMONSTRATION PROGRAM RESULTS—Continued

No. of individuals	Baltimore	Jacksonville	Seattle	Totals
Took field practicum	184	148	61	393
Passed field practicum	152 (82%)	148 (100%)	49 (80%)	349 (88%)
Provisionally certified	152	148	49	349 (38%)

Training

A certificate of training in the current Federal wetland delineation methodology, signed by a certified wetland delineator, would be a mandatory prerequisite for all WDCP applicants. Prior to the adoption of final regulations based on today's proposal, individuals may satisfy this future prerequisite by obtaining a certificate verifying completion of wetland delineation training in the current Federal wetland delineation methodology from an instructor utilizing the Corps 1993 WDCP draft training package. The availability of the draft training package developed for the WDCP, was announced in the **Federal Register** on April 16, 1993 (58 FR 19806). Copies were distributed free of charge by the Corps Wetlands Research and Technology Center (WRTC) at the Waterways Experiment Station (WES) in Vicksburg, MS. A limited number of copies may still be available by calling the WRTC at (601) 634–4217. An evaluation of the draft WDCP training package is being conducted by the Corps, and a revised training package will be developed for future use.

A list of potential training sources available to the public through private and academic institutions, is available from the Regulatory Branch of your local Corps district office or the Office of the Chief of Engineers in Washington, D.C. A certificate of completion of the WDCP wetland delineation training would be issued by the training source and required by the Corps for participation in the final WDCP. At this time, training may be provided by individuals who have received the training materials, regardless of whether or not they are provisionally certified by the Corps. However, after the adoption of final regulations for the WDCP, all training intended to meet this prerequisite must be provided by a wetland delineator certified under the final WDCP. It is the responsibility of the individual seeking certification by the Corps under the WDCP to ensure that the training meets the training prerequisite (i.e., that the training is provided by a certified wetland delineator).

The Corps will keep certified delineators and trainers abreast of modifications and updates to the training materials, and will provide lists of training sources offering the WDCP training. After a final WDCP is adopted, all districts will maintain lists of both certified wetland delineators as well as those who provide the requisite training, and will make these lists available to the public, as proposed in these regulations.

The Wetland Delineation Certification Program (WDCP)

The WDCP would require applicants to: (1) satisfy certain prerequisites and (2) pass a two-part test.

Prerequisites

Prerequisites for entrance into the WDCP would consist of: (1) Training in the current Federal wetland delineation methodology, and (2) two (2) years of professional experience in wetlands delineation. We feel training should consist of a combination of classroom and field training specifically in the current Federal wetland delineation methodology. Training must be conducted by an individual certified by the Corp, and should consist of a minimum of 36 hours of instruction, consistent with the training required of Corps, EPA, NRCS (formerly the SCS), and FWS Federal agency staff who delineate wetlands for purposes of Section 404 of the Clean Water Act. Comments are requested on alternative training mechanisms which provide greater flexibility to potential WDCP applicants. For example, comment is solicited in the use of videotape or at-home study for the delivery of the training material. One such alternative would allow individuals to study course materials at home, and then spend one or two days at a training program facility to receive hands-on instruction and to take the course exam. This alternative would help to reduce travel expenses, may lower tuition costs, and would reduce the time that a trainee would have to miss work. The Corps is concerned, however, that non-classroom oriented instructional methods may not provide training of a quality equivalent to classroom instruction. Comments on the impact of quality resulting from the alternative training methods taking into account the requirement for hands-on training, course test, and third party exam, are specifically sought as a part of this proposal. To satisfy the experience requirement, WDCP applicants should have a minimum of 2 years experience delineating wetlands for Federal, State, tribal or local governments, or the private sector. The WDCP applicant would have to supply references of employers, including telephone numbers for verification purposes, of references who can attest as to the WDCP applicant's assertions regarding experience. The Corps reserves the right to check a WDCP applicant's documented prerequisites. We welcome comments on alternative approaches of satisfying the experience requirement, such as documentation that a minimum number of wetland delineations were accepted by the Corps prior to certification. Acceptance into the WDCP (i.e., meeting all prerequisites) does not guarantee certification. Applications for certification must be accompanied by documentation (e.g., training certificate) that an individual meets all prerequisites. We welcome comments on the proposed prerequisites, as well as suggestions for other options.

Tests

Generally, WDCP applicants would submit a WDCP application form (to be developed for the final WDCP) to the appropriate district, where it would be considered in accordance with the final regulations. Qualified WDCP applicants would be notified of the next available test date. Testing will include a standardized written examination for nationwide use, which must be passed before applicants proceed to the field practicum. Based on the response to the demonstration projects, we are proposing to offer the national written test sessions in all Corps districts on the same date each month for the first three months of nationwide implementation of the WDCP and quarterly thereafter. Field practicums will be scheduled based on need (i.e., the number of WDCP applicants which have first passed the written test). The field practicums may vary slightly between divisions (the proposed geographic limits of the validity of certifications made at the district level), based on regional differences such as growing season, wetland type, and some field

indicators, however, the field practicum procedure will be identical nationwide. Comments on the appropriate procedures and frequency of the field testing, particularly from individuals who participated in the demonstration program, would be helpful. We are proposing to limit the number of opportunities to retake the tests without the benefit of additional training. WDCP applicants who fail either the written or the field test are encouraged to obtain additional training and/or experience prior to retesting.

Certification

Upon successful completion of the prerequisites and testing requirements, the district would award a certification to the applicant by mail. Certified wetland delineators would be required to include a signed statement with all wetland delineations submitted to the Corps, verifying that the information has been developed in accordance with the current Federal wetland delineation methodology, and is subject to legal penalties related to false information as provided for in 18 U.S.C. Section 1001 (18 U.S.C. Section 1001 provides that: Whoever, in any manner within the jurisdiction of any department or agency of the United States knowingly and willfully falsifies, conceals, or covers up by any trick, scheme or device a material fact or makes any false, fictitious, or fraudulent statements or representations or makes or uses any false writing or document knowing the same to contain any false, fictitious, or fraudulent statements or entry, shall be fined not more than $10,000 or imprisoned not more than five years, or both.) Certified wetland delineators would be contacted by the Corps as to the completeness and accuracy of the wetland delineation submitted within 30 days if submitted in conjunction with a permit application, or 60 days if not (see 325.2(c)). Expedited review associated with wetland delineations submitted by certified wetland delineators does not guarantee shorter permit processing times, which will be the subject of a future rulemaking action related to the Administration's Plan. The issuance of a certification does not create or grant any property interest or right for the certified wetland delineator, nor does it create any rights for an individual relying upon a wetland delineation made by a certified wetland delineator, but is intended to facilitate the determination of jurisdiction by the Corps.

Validity of Certifications

Comments are requested on our intention to consider provisional certifications issued by the demonstration districts valid as final certifications after the WDCP is implemented nationwide. Comments are also requested on the option of considering certifications (provisional as well as final) valid in a broader geographic area than the administering district's regulatory boundaries. While we are proposing that certifications be issued by districts and considered valid within the Corps Division in which the district exists, we invite comments on other options (e.g., nationwide). In addition, we invite comments on the need to further limit the validity of certifications in exceptional situations involving unique geographic areas. For example, it may be determined appropriate for certifications within Divisions which include entities such as Alaska, Hawaii, Puerto Rico, and America Samoa, etc., to limit the validity of certification to a smaller geographic area. Certifications would remain valid for a period of five (5) years; therefore recertification would generally be necessary once every 5 years. Certifications would be subject to suspension or revocation procedures (see Section 333.7) based on repeated poor performance and/or submittal of inaccurate wetland delineations by certified wetland delineators.

Costs

During the early years of the WDCP, costs to the Corps of administering the program will likely exceed the savings in reduced staffing needs associated with verifying wetland delineations. These costs were monitored during the demonstration program to assess the effect on budget and manpower allowances. The costs incurred by the demonstration districts were, as expected, greater than the costs anticipated during nationwide implementation due to the WDCP developmental responsibilities required of these districts.

Although the WDCP require the expenditure of a portion of the regulatory budget for several years, we are not proposing to assess a fee for certification. WDCP applicants will have incurred some costs associated with satisfaction of the training prerequisites of the program. In addition, it will be necessary for certified wetland delineators to keep certifications current with the most recent Federal wetland delineation methodology. Nonetheless, comments are requested on the issue of fees associated with the WDCP, such as where fees should be charged and why, and what should be the basis for such fees. Although we expect Federal costs associated with nationwide implementation of the WDCP to be higher initially, we are confident that Federal labor costs will be reduced over the life of the program.

Benefits

The Corps, permit applicants, and the public will benefit from the improved quality and consistency of wetland delineations the Corps receives from certified wetland delineators. The public will benefit from the expedited review and consideration of wetland delineations by certified wetland delineators by the Corps. We believe that the program will result in better service to the public by both the Corps and private sector wetland delineators. It is anticipated that both the Corps and the public will have greater certainty in consultants' or contractors' wetland delineations as a result of the WDCP. Benefits are expected to increase each year.

Proposed Changes

33 CFR 320.3(p)—Related Laws

We are proposing to add Section 307(e) of the Water Resources Development Act of 1990 authorizing the WDCP to the related laws section.

33 CFR 325.2(c)—Wetland Delineations Submitted by Certified Delineators

We are proposing procedures, requirements, and timeframes to provide for expedited review of wetland delineations submitted by certified delineators as required by Section 307(e) of the Water Resources Development Act of 1990.

33 CFR 333—Wetland Delineator Certification Program

We are adding a new part to implement the WDCP. Section 333.1 Purpose and Section 333.2 General provide a statement of purpose and an overview of the WDCP.

Section 333.3 Definitions provides definitions of common terms used in the WDCP. The proposed terms are ''accuracy determination'', ''wetland delineation'', ''wetland determination'', ''jurisdictional determination'', ''certification'', ''certified wetland delineator'', ''expedited review'', ''suspension'', ''revocation'', ''substantial inaccuracies'', and ''history of substantial inaccuracies''. We request comments on these terms and the need to define additional terms.

Section 333.4 Certification Process describes the procedures and requirements necessary to be certified under the WDCP. This section includes a discussion of the mandatory prerequisites and tests we are proposing

to require of wetland delineators in order to be certified by the Corps.

Section 333.5 Validity of Certifications provides for the geographic limits of where a certification would be considered valid in order to receive expedited review by the Corps.

Section 333.6 Recertification discusses the requirement for an individual to keep the certification current in order to receive expedited review by the Corps. We believe that certifications should not be valid indefinitely and are proposing a five (5) year limit.

Section 333.7 Suspension or revocation discusses the ability of the Corps to suspend or revoke an individual's certification, if appropriate, after an opportunity has been provided by the Corps for the certified delineator to respond in writing to the District Engineer's reasons for suspending or revoking the certification.

Environmental Documentation

We have made a preliminary determination that this action does not constitute a major Federal action significantly affecting the quality of the human environment. The WDCP is intended to improve the quality and consistency of wetland delineations reviewed by the Corps, and to expedite decisions regarding these delineations, but will have no effect on the outcome of the jurisdictional determination. Furthermore, appropriate environmental documentation is prepared for all permit decisions on a case-by-case basis.

Executive Order 12866

The Department of the Army has made a preliminary determination that these regulations do not contain a major proposal requiring the preparation of a regulatory analysis under E.O. 12866. The Office of Management and Budget has concurred. In addition, there has been, and will continue to be, substantial interagency coordination on the WDCP to ensure that the interests of other Federal agencies are considered in the finalization of regulations for the WDCP.

The Regulatory Flexibility Act

The Department of the Army, pursuant to Section 605(b) of the Regulatory Flexibility Act of 1980, has made a preliminary determination that these proposed regulations will not have a significant impact on a substantial number of small entities. Implementation of the WDCP has the potential to be labor intensive for the Corps, as was the case during the demonstration projects. While costs to the Corps of administering the program during the early years of the WDCP will likely exceed the savings in reduced manpower needs associated with verifying wetland jurisdictional determinations, we are confident that labor costs will be reduced over the life of the program. These costs were monitored during the demonstration program to assess the effect on budget and manpower allowances, and costs varies among the three participating Districts. Although the WDCP will require the expenditure of a portion of the regulatory budget for several years, we do not intend to assess a fee for certification. WDCP applicants will already have incurred expenses to obtain the necessary training as needed to meet the prerequisites of the program. In addition, it will be necessary for certified wetland delineators to keep certifications current with the most recent Federal wetland delineation methodology. We have taken steps, however, to minimize labor requirements on Corps districts in the implementation of the final WDCP. For example, field practicums will be standardized and necessary training provided to the districts, thereby eliminating the time-consuming developmental process experienced by the demonstration districts. Although we expect costs associated with nationwide implementation of the WDCP to be higher initially, we are confident that Federal labor costs will be deduced over the life of the program.

Benefits

The Corps, permit applicants, and the public will benefit from the improved quality and consistency of wetland delineations the Corps receives from certified wetland delineators. The public will benefit from the expedited review and consideration of wetland delineations submitted by certified wetland delineators by the Corps. We believe that the program will result in better service to the public by both the Corps and private sector wetland delineators. It is anticipated that both the Corps and the public will have greater certainty in consultants' or contractors' wetland delineations as a result of the WDCP. Benefits are expected to increase each year.

Note: (1) The terms ''district engineer'' or ''division engineer'' should be considered to be interchangeable until decisions are made as to the appropriate level of authority for decisions regarding the WDCP, as set forth in the final regulations.

List of Subjects

33 CFR Part 320

Environmental Protection, Intergovernmental relations, Navigation, Water pollution control, Waterways.

33 CFR Part 325

Administrative practice and procedure, Intergovernmental relations, Environmental protection, Navigation, Water pollution control, Waterways.

33 CFR Part 333

Waterways, Training programs, Consultants, Reporting and record keeping requirements.

Dated: March 3, 1995.

John H. Zirschky,

Acting Assistant Secretary of the Army (Civil Works), Department of the Army.

For the reasons set out in the preamble, 33 CFR Parts 320 and 325 are proposed to be amended, and Part 333 is added to read as follows:

33 CFR CHAPTER I—CORPS OF ENGINEERS, DEPARTMENT OF THE ARMY

PART 320—GENERAL REGULATORY POLICIES

1. The authority citation for Part 320 continues to read as follows:

Authority: 33 U.S.C. 401 et seq.; 33 U.S.C. 1344; 33 U.S.C. 1413.

2. Section 320.3 is amended by adding a new paragraph (p) at the end that reads as follows:

§ 320.3 Related laws.

* * * * *

(p) *Water Resources Development Act of 1990.* Pursuant to Section 307(e) of the Water Resources Development Act of 1990 (Pub. L. 101–640), the Secretary of the Army has established a program for the training and certification of individuals as wetland delineators for purposes of submitting wetland delineations to the Corps. The Wetland Delineator Certification Program also includes procedures for expediting review and consideration of wetland delineations submitted by wetland delineators it has certified.

PART 325—PROCESSING DEPARTMENT OF THE ARMY PERMITS

3. The authority citation of part 325 continues to read as follows:

Authority: 33 U.S.C. 401 et seq.; 33 U.S.C. 1344; 33 U.S.C. 1413.

4. Paragraph (c) is added to read as follows:

§ 325.2 Processing of applications.

* * * * *

(c) Wetland delineations submitted by certified wetland delineators—(1) *General.* The Corps intends to give expedited review to wetland delineations submitted by certified wetland delineators, as part of a request for wetland jurisdictional determinations.

(2) *Contents of wetland delineations.* Certified wetland delineators will submit wetland delineations to the appropriate Corps regulatory office using the following format.

(i) The wetland delineation submittal will include:

(A)(i) A copy of the wetland delineator's certification.

B(i) Drawings, plans and/or surveys, to scale, showing the acreage and boundaries of the wetland in the project area, and

(C) Completed data sheets in support of the documented wetland boundary.

(ii) In addition, submittals by certified wetland delineators will include the name, address and telephone number of the person designated to receive the results of the Corps' accuracy determination for Corps' acceptance of the wetland delineation.

(3) *Corps approval.* District Engineers will strive to make a determination of completeness and accuracy of wetland delineations submitted by certified wetland delineators within thirty (30) calendar days of receipt if they are accompanied by a permit application, and sixty (60) calender days if they are not.

(i) The district engineer's determination of completeness and accuracy of the wetland delineation submitted by a certified wetland delineator will be made in writing and will consist of:

(A) Request for additional information or corrections needed for the Corps to make a determination of the accuracy of the wetland delineation.

(B) Acceptance of the wetland delineation by the Corps as submitted, or

(C) Acceptance with minor modifications identified and made by the Corps.

(ii) The Corps final acceptance of a certified wetland delineator's submittal will represent the wetland delineation used in making the jurisdictional determination, and will remain valid for a specified period of time consistent with corps guidance as provided in the final acceptance document. Resubmittal of corrected wetland delineations by certified wetland delineators after an earlier submission has been determined to have been incomplete or inaccurate will be subject to the same time frames as the initial submittal.

* * * * *

PART 333—WETLAND DELINEATOR CERTIFICATION PROGRAM

5. Part 333 is added to read as follows:

PART 333—WETLAND DELINEATOR CERTIFICATION PROGRAM

333.1. Purpose.
333.2. General.
333.3. Definitions.
333.4. Certification Process.
333.5. Validity of certifications.
333.6. Recertification.
333.7. Suspension or revocation of certifications.
333.8. Maintenance of lists.

Authority: 33 U.S.C. 1344.

§ 333.1 Purpose.

This section prescribes the policies, procedures, and guidance for administration of the Wetland Delineator Certification Program (WDCP). The purposes of the WDCP are:

(a) To improve the quality and consistency of wetland delineations submitted to the Corps either alone or in conjunction with a permit application seeking to discharge dredge or fill material into waters of the United States, and.

(b) To streamline the regulatory process through the submittal of wetland delineations which can be approved by the Corps in an expedited manner (see 33 CFR 325.2(c) for a discussion of the expedited review and consideration of delineators submitted by certified wetland delineators).

§ 333.2 General.

The WDCP is a training and certification program for wetland delineators who submit wetland delineations to the Crops. The Corps has developed a training package for use by the others (e.g., the private sector, the academic community, States) in the current Federal wetland identification and delineation methodologies. WDCP applicants receive training from sources utilizing certified wetland delineators and the current training materials developed and provided to them for that purpose by the Corps for the WDCP. In addition, the Corps has developed a process to certify that wetland delineators have met certain minimum standards (see § 333.4 below). Furthermore, the Corps has established a process to expedite decisions on wetland delineators submitted by certified delineators (see § 325.2(c)).

§ 333.3 Definitions.

For purposes of this regulation these terms are defined as follows:

(a) The term *accuracy determination* refers to the process whereby the District Engineer determines that a wetland delineation submitted by a certified wetland delineator is consistent with the current Federal wetland delineation methodology. Such delineations may include some flaws which the Corps determines are minor and that can be easily corrected.

(b) The term *wetland delineation* means a final Corps of Engineers delineation, or verification by the Corps of a delineation submitted by an applicant or an applicant's representative, indicating the acreage and boundaries of a subject property that is wetland in accordance with the current Federal wetland delineation methodology. Additionally, the term includes reverification of expired wetland delineations and reverification of wetland delineation where new information has become available that may effect the final wetland delineation.

(c) The term *wetland determination* means a preliminary Corps of Engineers determination as to whether or not wetlands exist on a subject property.

(d) The term *jurisdictional determination* means a final Corps of Engineers determination that a wetland and/or waterbody is subject to regulatory jurisdiction under Section 404 of the Clean Water Act or a final Corps determination that a waterbody is subject to regulatory jurisdiction under Sections 9 and 10 of the Rivers and Habors Act of 1899. Additionally, the term includes reverification of expired jurisdictional determinations and reverification of jurisdictional determinations where new information has become available that may effect the final determination.

(e) The term *certification* refers to the Corps' official recognition that an individual has successfully demonstrated that he or she is capable of performing wetland delineations consistent with the current Federal wetland delineation methodology in use at the time of certification.

(f) The term *certified wetland delineator* means an individual who has met all prerequisites and testing requirements of the Corps of Engineers wetland delineator certification program. The certified wetland delineator is able to submit wetland delineations to the Corps and receive expedited review and decisions as to the completeness and accuracy of the delineation.

(g) The term *expedited review* means that, to the maximum extent possible,

District Engineers will make all determinations as to the completeness and accuracy of wetland delineations submitted by certified wetland delineators within thirty (30) calendar days of receipt in the case of wetland delineation requests not associated with a permit application.

(h) The term *suspension* means the temporary removal of a wetland delineator's Corps certification, pending a decision by the District Engineer on whether a certification should be revoked.

(i) The term *revocation* means the removal of a delineator's certification with an optional ban on recertification for a prescribed revocation period.

(j) The term *substantial inaccuracies* means non-minor inaccuracies that, in the District Engineer's judgment, have materially affected the completeness and accuracy of the delineation and/or have caused substantial delays to the District in its review of the delineation. Substantial inaccuracies may include, but are not limited to: the inaccurate application of one or more of the field indicators for vegetation, soils, or hydrology; the failure to follow appropriate field sampling protocol or techniques; the submission of inaccurate or incomplete data forms; or the reach of erroneous conclusions about the presence and/or extent of wetlands at a site.

(k) The term *history of substantial inaccuracies* means 2 or more substantial inaccuracies in wetland delineations submitted to the Corps by the same certified wetland delineator within the same District, or 3 or more substantial inaccuracies the Corps has documented in different Districts, with at least one of these inaccuracies recorded in the District contemplating a revocation action.

§ 333.4 Certification process.

(a) Prerequisites: The certification process is designed to identify those individuals who possess the requisite knowledge and skills necessary to conduct and appropriately document wetland delineations consistent with the current Federal wetland delineation methodology in use at the time of certification. The certification process, which will be administered by Corps district offices, involves two steps: meeting all prerequisites, and passing all tests.

(1) The prerequisites will consist of written documentation demonstrating that the WDCP applicant has:

(i) At least two (2) years experience in delineating wetlands for any Federal, State, or local governments, or the private sector, and

(ii) Completed wetland delineation training as set forth in the Corps training materials developed for the WDCP.

(2) The training package will be made available only to training sources for instruction by a WDCP certified wetland delineator.

(b) *Testing:* The WDCP involves two (2) types of tests: a national written test, and a regional field proacticum. WDCP applicants meeting all prerequisites will be scheduled for the written test. A minimum score of 80% will be required to successfully complete the written test. WDCP applicants will be permitted to retake the written test a maximum of three (3) times, or the field practicum a maximum of two (2) times, unless the WDCP applicant can provide documentation that the required training has been repeated since the last practicum. During the practicum, WDCP applicants will be asked to collect data and document conclusions. A minimum score of 80% on the field test will be required. WDCP applicants who pass both the written test and field practicum will receive documentation of certification by the applicable Corps district.

(c) *Certification.* In order to receive expedited review and consideration by the Corps, certified wetland delineators will be required to submit a copy of their certification, in addition to other required documentation, to the Corps in conjunction with each request for a verification of a wetland delineation. Wetland delineations conducted in whole or in part by an uncertified individual may receive expedited review and consideration if it is reviewed, adopted, and signed by a Corps-certified wetland delineator. The certified wetland delineator must state that the he or she has personally reviewed and concurred with the wetland delineation and has found the documentation to be satisfactory. By signature and submittal, certified wetland delineators accept responsibility for the completeness and accuracy of the wetland delineation, and are subject to the suspension or revocation procedures described in § 333.7, and legal penalties regarding false information.

§ 333.5 Validity of certifications.

Generally, certifications made pursuant to these regulations will be valid within the Corps division boundaries of the certifying district. However, due to the unique features of wetland characteristics in some districts (e.g., Alaska), Corps divisions may confine the validity of certain certifications to a district or set of districts. Certifications will remain valid for a period of five (5) years, at which time recertification will be necessary.

§ 333.6 Recertification.

(a) Recertification through the WDCP will be required every five (5) years, unless otherwise required by the Corps. WDCP applicants for recertification may be expected to complete the testing requirements (written, field, or both, as determined by the district) which have been adopted for the final WDCP. If the Corps adopts use of a new wetland delineation methodology, or events beyond the Corps' control nullify the original certification of a wetland delineator made by the Corps, recertification may be required at a greater frequency.

(b) Minor changes in the Corps wetland delineation policy and/or procedures will typically not require recertification. The Corps will notify certified individuals of minor modifications by mail. The extent of the modification will dictate the need for recertification (e.g, a new wetland delineation manual may require recertification while use of a new data form may not). Once notified, certified wetland delineators will be expected to incorporate these modifications into all future wetland delineations they submit. Failure to do so maybe grounds for suspension of an individual's certification.

§ 333.7 Suspension or revocation of certifications.

(a) A District Engineer may suspend or revoke a delineator's certification if the District Engineer determines that the wetland delineations submitted by the certified wetland delineator exhibit a history of substantial inaccuracies. Revocation will result in removal of an individual from lists provided to the public, while suspension will not. This will ensure that the list of certified wetland delineators given to the public does not contain certified wetland delineators that repeatedly perform and/or submit inaccurate wetland delineations and thus delay, rather than expedite, the Corps acceptance of wetland delineations.

(b) *Procedures*—(1) *Records.* Districts will maintain accurate records on all substantial inaccuracies identified in wetland delineations submitted by certified wetland delineators. Whenever any District identifies such an inaccuracy, the District will notify the certified wetland delineator and allow the delineator to write a letter explaining the inaccuracy. Such letter will be maintained in the delineator's file. If the District discovers that a certified wetland delineator has

submitted 2 or more substantially inaccurate delineations to the District, or 1 substantially inaccurate delineation to the District and 2 or more delineations to other Districts, and the Chief of the Regulatory office believes that these inaccuracies warrant revocation, than the Chief of the Regulatory office should prepare, with the advice of counsel, a report for the District Engineer substantiating these inaccuracies along with a recommendation to revoke the delineator's certification.

(2) *Notification.* If the District Engineer agrees that revocation may be warranted. The District Engineer shall send a letter to the delineator explaining:

(i) That the District Engineer is considering whether to revoke the delineator's certification.

(ii) That the delineator's certification is suspended pending the District Engineer's decision.

(iii) The causes for the potential revocation, including the substantial inaccuracies identified, and

(iv) That the delineator has 30 days from receipt of the District Engineer's letter to send a response letter providing mitigating or extenuating circumstances, or stating a defense against the causes for revocation.

(3) *Delineator response.* In the response letter, the delineator should include a complete explanation of any mitigating or extenuating circumstances demonstrating that revocation is unwarranted. The delineator should also provide any defenses to the stated causes for revocation, including any assertion that he or she may choose to make that no substantial inaccuracies occurred.

(4) *Review and decision.* The District Engineer must consider any certified wetland delineator response letter submitted. If a letter raises any genuine issues of fact, the District Engineer, exercising appropriate discretion, may decide to meet with the delineator to discuss these issues. After considering all information gathered by the District and submitted by the delineator, the District Engineer should make the decision, based on a preponderance of the evidence, as to whether or not to revoke the delineator's certification.

(5) *Notification of decision to delineator.* Absent extenuating circumstances, the District Engineer shall decide whether to revoke a certification within 30 days of receiving the delineator's response letter or any meeting with the delineator, whichever is later. A letter stating the District Engineer's decision shall be sent to the delineator by certified mail, return receipt requested.

(6) *Notification to other corps districts.* If the District Engineer's decision is to revoke a certification, the District shall notify all other Corps Districts that the delineator is no longer certified, and the individual's name will be removed from the list of certified wetland delineators given to the public.

(c) *Revocation period.* Revocation periods are measured from the beginning of the suspension. The District Engineer should assign a revocation period commensurate with the seriousness of the causes for revocation, but no longer than 2 years. The District Engineer may reduce the length of the revocation period after it is assigned, if new information or other appropriate reasons develop. Delineators can apply for recertification only after the revocation period has ended.

(d) *Scope of revocation.* (1) A revocation only applies to the certification of the person who signed the delineations identified as inaccurate. Thus, a revocation cannot be imputed to other certified delineator in the same consulting firm as a decertified delineator.

(2) The revocation shall apply nationwide.

(e) *Appeal.* A revocation may be appealed in writing to the Division Engineer setting forth matters in extenuation, mitigation, or disagreement with the revocation. After reviewing both the appeal letter and the administrative record, the Division Engineer will reverse the District Engineer's decision to revoke the delineator's certification only if the determination is found to be arbitrary or capricious. The Division Engineer must notify both the delineator and the District Engineer of the decision. Only after the conclusion of this appeal process may a delineator seek redress in Federal court.

§ 333.8 Maintenance of lists.

The Corps will maintain two (2) lists for the WDCP. The first will be a list of individuals within a Division who have been certified by one of its Districts through the final WDCP. The second will be the list of training sources providing the prerequisite training. All training intended to meet the mandatory prerequisite will be conducted by a certified wetland delineator as an instructor. Both lists will be available to the public.

[FR Doc. 95–5873 Filed 3–13–95; 8:45 am]

BILLING CODE 3710–92–M

DEPARTMENT OF INTERIOR

National Park Service

36 CFR Part 7

RIN 1024–AC26

Oregon Caves National Monument; Special Regulations

AGENCY: National Park Service, Interior.

ACTION: Proposed rule.

SUMMARY: The National Park Service (NPS) proposes to revise the current regulation concerning admission to Oregon Caves National Monument found at 36 CFR 7.49 that prohibits access to children under the age of six years from entering Oregon Caves in Oregon Caves National Monument. This proposed revision to the existing regulation would allow children to enter the Caves, regardless of age. The existing age restriction is not necessary to provide safe and quality interpretive tours in the Caves. The effect of this proposed revision is to establish a more equitable criterion for allowing children access to the caves. If necessary, the park will manage access to the Caves through the Superintendent's Compendium.

DATES: Written comments will be accepted through May 15, 1995.

ADDRESSES: Comments should be addressed to: Superintendent, Oregon Caves National Monument, 19000 Caves Highway, Cave Junction, OR 97523.

FOR FURTHER INFORMATION CONTACT: Craig W. Ackerman, Superintendent, Oregon Caves National Monument, 19000 Caves Highway, Cave Junction, OR 97523.

SUPPLEMENTARY INFORMATION:

Background

This proposed revision addresses a specific management problem involving access to the only public tour route in Oregon Caves. The present restriction, 36 CFR 7.49, states that ''Children under the age of 6 are not permitted to enter the caves.'' A search of historical records has failed to find any extensive discussion of or justification for this particular age limit. No other Park Service cave, open for public tours, has a similar regulatory limit for general tours.

Employees who give the cave tours or sell tickets for the tours generally make the determination as to whether a child wanting to enter the caves is under six years of age. Since most parents do not carry documentation of the age of a child, verification of age is usually not possible. Some parents become upset

when their children are denied access to the Caves. The age limit restriction has been the most common visitor complaint to both park and concession employees over the last few decades. Denying access to children who can safely travel through the Caves contradicts one of the management objectives of Oregon Caves National Monument's General Management Plan, which is to ''provide quality interpretive service that increases the visitors' knowledge, appreciation and enjoyment of the resources at Oregon Caves.''

There appears to be little justification for using six years of age in determining who enters the Caves. The width of tread, number and rise of steps, the length of the tour, and the height of railings better determine whether visitors can safely negotiate the cave tour. Renovation of the entire trail system, which is being designed with children in mind, is currently in the planning stage. This proposed revision would greatly reduce visitor conflicts by instituting safety restrictions that are fair and equitable. If necessary, the park will manage access to the Caves through the Superintendent's Compendium.

Options Considered

Other management options considered included leaving the current regulation as it is or instituting a fixed height and/or endurance limit that might soon be out of tune with continuing modification of the present trail system. The current proposed rule revision is in accordance with stated overall management objectives.

Effects of Revision

This rule revision increases the opportunity for visitors with young children to enter Oregon Caves. There will be fewer visitor complaints, fewer visitor/NPS confrontations, and fewer disrupted public tours.

Public Participation

The policy of the National Park Service is, whenever practicable, to afford the public an opportunity to participate in the rulemaking process. Accordingly, interested persons may submit written comments regarding this proposed rule to the address noted at the beginning of this rulemaking.

Drafting Information

The primary authors of this revision are Craig W. Ackerman, Superintendent of Oregon Caves National Monument and Dennis Burnett, Washington Office of Ranger Activities, National Park Service.

Paperwork Reduction Act

This revision does not contain information collection requirements that require approval by the Office of Management and Budget under 44 U.S.C. 3501 *et. seq.*

Compliance With Other Laws

The Department of Interior has determined that this document is not a major rule under Executive Order 12866 and certifies that this document will not have a significant economic effect on a substantial number of small entities under the Regulatory Flexibility Act (5 U.S.C. 601 *et seq.*). The economic effects of this rulemaking are local in nature and negligible in scope.

The National Park Service has determined that this proposed revision will not have a significant effect on the quality of the human environment, health and safety because it is not expected to:

(a) Increase public use to the extent of compromising the nature and character of the area or causing physical damage to it;

(b) Introduce non-compatible uses which might compromise the nature and characteristics of the area, or cause physical damage to it;

(c) Conflict with adjacent ownerships or land uses; or

(d) Cause a nuisance to adjacent owners or occupants.

Based upon this determination, this proposed revision is categorically excluded from the procedural requirements of the National Environmental Policy Act (NEPA) by Departmental regulations in 516 DM 6, (49 FR 21438). As such, neither an Environmental Assessment nor an Environmental Impact Statement has been prepared.

List of Subjects in 36 CFR Part 13

National Parks; Reporting and recordkeeping requirements.

In consideration of the foregoing, it is proposed to amend 36 CFR Chapter 1 as follows:

PART 7—SPECIAL REGULATING, AREAS OF THE NATIONAL PARK SYSTEM

1. The authority citation for Part 7 continues to read as follows:

Authority: 16 U.S.C. 1, 3, 9a, 460(q), 462(k); Sec. 7.96 also issued under D.C. Code 8–137 (1981) and D.C. Code 40–721 (1981).

2. Section 7.49 is revised to read as follows:

§ 7.49 Oregon Caves National Monument.

(a) *Admission to caves.* No person, or persons, shall be permitted to enter Oregon Caves unless accompanied by an approved National Park Service or concessioner employee who has successfully completed the training prescribed by the National Park Service.

Dated: February 27, 1995.

Approved:

George T. Frampton, Jr.,

Assistant Secretary for Fish and Wildlife and Parks.

[FR Doc. 95–6242 Filed 3–13–95; 8:45 am]

BILLING CODE 4310–70–P

ENVIRONMENTAL PROTECTION AGENCY

40 CFR Parts 50 and 53

[AD–FRL–5172–4]

National Ambient Air Quality Standards for Sulfur Oxides (Sulfur Dioxide)—Reproposal

AGENCY: U.S. Environmental Protection Agency (U.S. EPA).

ACTION: Extension of public comment period.

SUMMARY: The EPA is announcing the extension of the public comment period on the proposed rule for the national ambient air quality standards (NAAQS) for sulfur oxides (sulfur dioxide) and associated changes to the requirements for Ambient Air Monitoring Reference and Equivalent Methods that were published on November 15, 1994 (59 FR 58958).

DATES: Written comments must be received on or before April 14, 1995.

ADDRESSES: Submit written comments on the proposed action on the NAAQS (40 CFR part 50) (duplicate copies preferred) to Air and Radiation Docket Information Center (6102), Room M–1500, U.S. Environmental Protection Agency, Attn: Docket No. A–84–25, 401 M Street, SW., Washington, DC 20460. Comments on the proposed revisions to the Ambient Air Monitoring Reference and Equivalent Methods (40 CFR part 53) should be separated from those pertaining to the standards and sent to the same address, Attn: Docket No. A–94–42. These dockets, containing supporting information used in developing the proposed rule, are located in the Air and Radiation Docket Information Center of the U.S. Environmental Protection Agency, South Conference Center, Room M–1500, 401 M Street, SW., Washington, DC 20460. The dockets may be inspected between 8:30 a.m. and 3:30 p.m. on weekdays, and a reasonable fee may be charged for copying.

FOR FURTHER INFORMATION CONTACT: Part 50 Notice—Ms. Susan Lyon Stone, Air Quality Strategies and Standards Division (MD–15), U.S. Environmental Protection Agency, Research Triangle Park, NC 27711, telephone (919) 541–1146. Part 53 Notice—Mr. Frank McElroy, Atmospheric Research and Exposure Assessment Laboratory (MD–77), U.S. Environmental Protection Agency, Research Triangle Park, NC 27711, telephone (919) 541–2622.

SUPPLEMENTARY INFORMATION: In order to allow additional time to review the Proposed Requirements for Implementation Plans and Ambient Air Quality Surveillance for SO_2 National Ambient Air Quality Standards (40 CFR parts 51 and 58) before submitting comment on the National Ambient Air Quality Standards for Sulfur Oxides (Sulfur Dioxide)—Reproposal (40 CFR parts 50 and 53), the EPA is extending the public comment period on the 40 CFR parts 50 and 53 proposals from March 15, 1995 to April 14, 1995. The document that proposes for public comment the requirements for implementing the alternative measures and changes in the sulfur dioxide ambient air surveillance network will be published in the **Federal Register** on or about March 1, 1995.

The comment period extension is also intended to provide additional opportunity for members of the medical community who are experts in the field of asthma treatment to provide comment on the health significance of the sulfur dioxide-induced effects. The extended comment period will also provide additional time to comment on other parts of the November 15, 1994 notice (59 FR 58958).

List of Subjects

40 CFR Part 50

Air pollution control, Carbon monoxide, Lead, Nitrogen dioxide, Ozone, Particulate matter, Sulfur oxides.

40 CFR Part 53

Administrative practice and procedure, Air pollution control, Reporting and recordkeeping requirements.

Dated: March 9, 1995.

Mary D. Nichols,

Assistant Administrator for Air and Radiation.

[FR Doc. 95–6266 Filed 3–13–95; 8:45 am]

BILLING CODE 6560–50–P

40 CFR Part 63

[AD-FRL–5168–8]

RIN 2060–AD95

National Emission Standards for Hazardous Air Pollutants; Proposed Standards for Hazardous Air Pollutant Emissions From the Printing and Publishing Industry

AGENCY: Environmental Protection Agency (EPA).

ACTION: Proposed rule and notice of public hearing.

SUMMARY: The proposed standards would reduce emissions of hazardous air pollutants (HAP) from existing and new printing operations that are major sources of HAP emissions. A major source is defined in section 112(a) of the Clean Air Act as amended in 1990 (Act) as a source that emits, or has the potential to emit, considering controls, 10 tons per year (tpy) or more of any individual HAP or 25 tpy or more of any combination of HAP. Some of these pollutants are emitted from publication rotogravure and product and packaging rotogravure and wide-web flexographic printing. These operations are covered in the proposed rule. In these printing operations, a variety of HAP are used as solvents and components in inks and other materials applied by printers. The HAP emitted by the facilities covered by this proposed rule include toluene, xylene, ethylbenzene, methanol, methyl ethyl ketone, methyl isobutyl ketone, ethylene glycol and glycol ethers. All of these pollutants can cause reversible or irreversible toxic effects following exposure. The potential toxic effects include eye, nose, throat and skin irritation; and blood cell, heart, liver and kidney damage. The proposed rule is estimated to reduce emissions of HAP by 6,700 Mg per year. The emissions reductions achieved by these standards when combined with the emissions reductions achieved by similar standards, will achieve the primary goal of the Clean Air Act, which is to ''enhance the quality of the Nation's air resources so as to promote the public health and welfare and the productive capacity of its population.''

The proposed rule implements section 112(d) of the Clean Air Act Amendments of 1990 (1990 Amendments), which requires the Administrator to regulate emissions of HAP listed in section 112(d) of the 1990 Amendments. The intent of this rule is to protect the public health by requiring the maximum degree of reduction in emissions of HAP from new and existing major sources, taking into consideration the cost of achieving such emission reduction, any nonair quality, health and environmental impacts, and energy requirements.

DATES: *Comments.* Comments must be received on or before May 30, 1995.

Public Hearing. Anyone requesting a public hearing must contact the EPA no later than April 13, 1995. If a hearing is held, it will take place on April 28, 1995, beginning at 10 a.m.

ADDRESSES: Comments. Comments should be submitted (in duplicate, if possible) to: Air and Radiation Docket (Mail Code 6102), Attention: Docket No. A–92–42, U. S. Environmental Protection Agency, 401 M Street, SW, Washington, DC 20460. The EPA requests that a separate copy also be sent to the contact person listed below.

The docket is located at the above address in room M–1500, Waterside Mall (ground floor), and may be inspected from 8 a.m. to 5:30 p.m., Monday through Friday; telephone number (202) 260–7548, FAX (202) 260–4400. A reasonable fee may be charged for copying docket materials.

Public Hearing. If anyone contacts the EPA requesting a public hearing by the required date (see DATES), the hearing will be held at the EPA Office of Administration Auditorium in Research Triangle Park, North Carolina. Persons interested in speaking at a public hearing should contact Ms. Kim Teal, Coatings and Consumer Products Group, (MD–13), U. S. Environmental Protection Agency, Research Triangle Park, North Carolina 27711, telephone number (919) 541–5580. Persons interested in attending the hearing should contact Ms. Kim Teal to verify that it will be held.

Additional Information. For information on accessing the U.S. EPA Technology Transfer Network electronic bulletin board and obtaining copies of the Proposed Regulatory Text, Background Information Document or Economic Impact Analysis, please refer to the **SUPPLEMENTARY INFORMATION** section below.

FOR FURTHER INFORMATION CONTACT: For information concerning the proposed regulation, contact Mr. David Salman at (919) 541–0859, Coatings and Consumer Products Group, Emission Standards Division (MD–13), U. S. Environmental Protection Agency, Research Triangle Park, North Carolina 27711.

SUPPLEMENTARY INFORMATION:

Technology Transfer Network. The Technology Transfer Network (TTN) is one of EPA's electronic bulletin boards. The TTN provides information and technology exchange in various areas of air pollution control. The service is free

except for the cost of a phone call. Dial (919) 541–5472 for up to a 14,000 bps modem. If more information on TTN is needed call the HELP line at (919) 541–5384.

Proposed Regulatory Text. The proposed regulatory text is not included in this **Federal Register** notice, but is available in Docket No. A–92–42, or by written or telephone request from the Air and Radiation Docket. This notice and the proposed regulatory language are also available for downloading TTN under Clean Air Act, Recently Signed Rules.

Background Information Document. The Background Information Document (BID) for the proposed standards may be obtained from the docket; the U. S. EPA Library (MD–35), Research Triangle Park, North Carolina 27711, telephone number (919) 541–2777; or the National Technical Information Service (NTIS), 5285 Port Royal Road, Springfield, Virginia 22161, telephone (703) 487–4650. Please refer to ''National Emission Standards for Hazardous Air Pollutants: Printing and Publishing Industry—Background Information for Proposed Standards'' (EPA–453/R–95–002a). The BID is also available for downloading on the TTN.

Economic Impact Analysis. The Economic Impact Analysis (EIA) for the proposed standards may be obtained from the docket, the U. S. EPA Library, or the NTIS. Please refer to ''Economic Impact Analysis for the Printing and Publishing NESHAP'' (EPA–452/D–95–001). The EIA is also available for downloading on the TTN.

Preamble Outline. The information presented in this preamble is organized as follows:

I. Background

A. Regulatory Background and Purpose
B. Common Sense Initiative

II. Summary of the Proposed Rule

A. Applicability
B. Proposed Standards for Affected Sources
C. Compliance Dates
D. Compliance Extensions
E. Compliance Testing and Monitoring
F. Reporting and Recordkeeping Requirements.

III. Summary of Environmental, Energy, and Economic Impacts of the Proposed Rule

A. Emission Reductions
B. Secondary Environmental Impacts
C. Energy Impacts
D. Cost Impacts
E. Economic Impacts

IV. Process Descriptions and Control Technologies

A. Process Descriptions
B. Control Techniques

V. Rationale for the Proposed Rule

A. Regulatory Development Process for NESHAP
B. Determining Maximum Achievable Control Technology (MACT) ''Floors''
C. Selection of Pollutant and Source Category(ies)
D. Selection of Emission Points Covered by the Proposed Rule
E. Selection of the Basis for the Proposed Rule
F. Selection of the Format of the Proposed Rule
G. Selection of Emission Test Methods and Monitoring Requirements
H. Selection of Recordkeeping and Reporting Requirements
I. Selection of Compliance Deadlines
J. Operating Permit Program
K. Pollution Prevention Considerations
L. Solicitation of Comments

VI. Administrative Requirements

A. Public Hearing
B. Docket
C. Executive Order 12866
D. Enhancing the Intergovernmental Partnership Under Executive Order 12875
E. Paperwork Reduction Act
F. Regulatory Flexibility Act
G. Clean Air Act Section 117
H. Regulatory Review

VII. Statutory Authority

I. Background.

The proposed rule addresses facilities which apply ink and other materials to any substrate, except fabric, using rotogravure or wide-web flexographic methods. These facilities print products such as magazines, newspapers, supplements, packaging and wallpaper on substrates such as paper, plastic, metal foil, and vinyl.

A. Regulatory Background and Purpose.

The Act requires, under section 112, that EPA evaluate and control emissions of HAP. The control of HAP is to be achieved through promulgation of emission standards under sections 112(d) and (f), and of work practice standards under section 112(h) where appropriate, for categories of sources that emit HAP. Pursuant to section 112(c) of the Act, EPA published in the **Federal Register** the initial list of source categories that emit HAP on July 16, 1992 (57 FR 31576). This list includes major and area sources of HAP for which the EPA intends to issue regulations between November 1992 and November 2000.

The Act was created, in part, ''to protect and enhance the quality of the Nation's air resources so as to promote the public health and welfare and the productive capacity of its population'' (the Act, section 101(b)(1)). As such, this proposed regulation would protect the public health by reducing emissions of HAP from publication rotogravure and product and packaging rotogravure and wide-web flexographic printing.

The HAP listed in section 112(b)(1) emitted by printing facilities that would be covered by this proposed rule include toluene, xylene, ethylbenzene, methanol, methyl ethyl ketone, methyl isobutyl ketone, ethylene glycol and glycol ethers. All of these pollutants can cause reversible or irreversible toxic effects following exposure. The potential toxic effects include eye, nose, throat and skin irritation; and blood cell, heart, liver and kidney damage. These adverse health effects are associated with a wide range of ambient concentrations and exposure times and are influenced by source-specific characteristics such as emission rates and local meteorological conditions. Health impacts are also dependent on multiple factors that affect human variability such as genetics, age, health status (e.g., the presence of pre-existing disease) and lifestyle.

The proposed standards will reduce HAP emissions from publication rotogravure printing facilities by 4,750 Mg/yr (5,220 tpy) from a baseline level of 17,500 Mg/yr (19,200 tpy). The proposed standards will reduce HAP emissions from product and packaging rotogravure and wide web flexographic printing facilities by 1,940 Mg/yr (2,140 tpy) from a baseline level of 4,200 Mg/yr (4,620 tpy).

There are no significant economic impacts associated with the proposed standards. There are no firms or facilities at risk of closure as a result of the proposed standards and there will not be a significant economic impact on a substantial number of small entities.

B. Common Sense Initiative

On October 17, 1994, the Administrator established the Common Sense Initiative (CSI) Council in accordance with the Federal Advisory Committee Act (U.S.C. App. 2, Section 9(c)) requirements. The CSI addresses six industrial sectors. The Printing and Publishing industry is one of these sectors.

The following are the six elements of the CSI program, as stated in the ''Advisory Committee Charter.''

1. *Regulation.* Review existing regulations for opportunities to get better environmental results at less cost. Improve new rules through increased coordination.

2. *Pollution Prevention.* Actively promote pollution prevention as the standard business practice and a central ethic of environmental protection.

3. *Recordkeeping and Reporting.* Make it easier to provide, use, and

publicly disseminate relevant pollution and environmental information.

4. *Compliance and Enforcement.* Find innovative ways to assist companies that seek to comply and exceed legal requirements while consistently enforcing the law for those that do not achieve compliance.

5. *Permitting.* Improve permitting so that it works more efficiently, encourages innovation, and creates more opportunities for public participation.

6. *Environmental Technology.* Give industry the incentives and flexibility to develop innovative technologies that meet and exceed environmental standards while cutting costs.

The Agency intends to work with the Printing CSI sector team and consider its consensus recommendations concerning the proposed standards. Even though the data collection and analysis efforts for the proposed standards were completed before the CSI program was announced, many aspects of the CSI are reflected in the proposed standards.

The alternatives considered in the development of this regulation, including those alternatives selected as standards for new and existing printing facilities are based on process and emissions data received from over 600 printing facilities. The EPA met with industry and trade groups on numerous occasions to discuss these data. In addition, facilities and State regulatory authorities had the opportunity to comment on draft versions of the proposed regulation and to provide additional information. Two trade organizations provided extensive comments; these comments were considered, and in some cases, today's proposed standards reflect these comments. Of major concern to industry were the opportunity to comply through pollution prevention by using low HAP content materials.

The regulation allows sources flexibility to select from various options for compliance. Sources may reduce HAP usage and emissions through conversions to waterborne, lower HAP solvent-borne or ultraviolet/electron beam cure materials. Alternatively, sources may install or upgrade existing capture and control devices to meet the proposed standard. Finally sources have the option to comply by a combination of lower HAP materials and capture and control. Facilities may select the most cost-effective option based on facility specific considerations.

The proposed standards give existing facilities 3 years from the date of promulgation to comply. This is the maximum amount of time allowed under the Clean Air Act. This timeframe will provide the greatest opportunity for developing and adopting low HAP content materials, and provide sufficient time for facilities that choose to install or upgrade capture and control equipment.

Included in the proposed rule are methods for determining initial compliance as well as monitoring, recordkeeping, and reporting requirements. All of these components are necessary to ensure that sources will comply with the standards both initially and over time. However, the EPA has made every effort to simplify the requirements in the rule. The Agency has also attempted to maintain consistency with existing regulations, or referencing the applicable sections, depending on which method would be least confusing for a given situation.

Representatives from other interested EPA offices and programs, as well as representatives from State regulatory agencies are included in the regulatory development process as members of the Work Group. The Work Group must review and concur with the regulation before proposal and promulgation. Therefore, the EPA believes that the implications to other EPA offices and programs have been adequately considered during the development of these standards.

II. Summary of the Proposed Rule

Table 1 provides an overview of the proposed rule, including applicability; the standards for each affected source; test methods and procedures; and monitoring, recordkeeping, and reporting requirements.

TABLE 1.—SUMMARY OF SUBPART KK OF 40 CFR PART 63—NATIONAL EMISSION STANDARDS FOR THE PRINTING AND PUBLISHING INDUSTRY

Affected source and requirement	Description
Printing and Publishing Industry:	
Applicability	This rule applies to facilities engaged in rotogravure and wide-web flexographic printing that are major sources as defined in 40 CFR part 63. (63.821).
Estimated Number of Facilities.	Approximately 200 facilities are expected to be affected by the rule. Applicable SIC codes include 2295, 2392, 2647, 2649, 2651, 2671, 2673, 2674, 2711, 2721, 2754, 2759, 3497, and 3996.
Permit Requirements	Major sources are required to obtain operating permits in State where facility is located according to 40 CFR part 70 and applicable State regulations. (63.821(d)).
All Affected Sources:	
Standards	Comply with §§ 63.4 through 63.6 of the General Provisions of 40 CFR part 63, subpart A, except for § 63.6(h). (63.823).
Compliance Dates	Within three years of the effective date for existing sources and upon startup for new sources. (63.826).
Test Methods and Procedures.	See individual affected sources.
Monitoring Requirements	See individual affected sources.
Recordkeeping Requirements	Comply with § 63.10(b) and (c) of the General Provisions. (63.829).
Reporting Requirements	Initial notification, notification of performance tests, notification of compliance status, performance test reports, startup, shutdown and malfunction reports, summary reports, and HAP use reports as described in §§ 63.9–63.10. (63.830).
Publication Rotogravure Facilities:	
Standards	Control of 92 percent of organic HAP or equivalent. (Organic HAP emissions limited to no greater than 8 percent of the mass of volatile matter, including water, used on a plantwide basis.) (63.824(b)).
Performance Test Period and Tests.	1. Test Period. Each and every month. (63.824(b)). 2. Performance Test. Initial performance test for all control devices to demonstrate compliance with overall control efficiency requirement. (63.824(b))

TABLE 1.—SUMMARY OF SUBPART KK OF 40 CFR PART 63—NATIONAL EMISSION STANDARDS FOR THE PRINTING AND PUBLISHING INDUSTRY—Continued

Affected source and requirement	Description
Test Methods and Procedures.	1. Organic HAP content determination. (63.827(b)(1)). 2. Volatile matter content determination. (63.827(c)(1)). 3. Overall control efficiency using liquid-liquid mass balance for solvent recovery systems. (63.824(b)(1)(i). 4. Overall control efficiency determination using capture efficiency test with continuous emission monitors. (63.824(b)(1)(ii) and 63.824(b)(2)(ii)). 5. Overall control efficiency determination using capture efficiency test and incinerator destruction efficiency test. (63.824(b)(2)(i).
Monitoring Requirements	1. Hourly recording of flow rate from press to control device. (63.828(a)(1). 2. Quarterly audit of continuous emission monitors. (63.828(a)(2)(i)). 3. Monitoring of capture system operating parameter. (63.828(a)(5)).
Product and Packaging Rotogravure Presses and Wide-web Flexographic Presses, or Groups of Presses Controlled by a Common Solvent Recovery System:	
Standards	Control of 95 percent of organic HAP, or organic HAP emissions limited to no greater than 0.20 kg HAP per kg of solids applied, for each press, or group of presses controlled by a common solvent recovery system, or organic HAP emissions limited to no greater than 0.04 kg HAP per kg inks and other materials applied, for each press. (63.825(b)).
Performance Test Period and Tests.	1. Test Period. *Uncontrolled Presses.* Each and every month. *Presses controlled with solvent recovery systems.* Each and every month. *Presses controlled with incinerators monitoring operating parameters.* Every three hour period. *Presses controlled with incinerators using continuous emissions monitors.* Each and every month. (63.825(b) and (c)). 2. Performance Test. Initial performance test for all control devices to demonstrate compliance with organic HAP emission rate. (63.825(g) and (h)).
Test Methods and Procedures.	1. Organic HAP content determination. (63.827(b)(2)). 2. Volatile matter and solids content determination. (63.827(c)(2)). 3. Overall control efficiency using liquid-liquid mass balance for solvent recovery systems. (63.825(g). 4. Overall control efficiency determination using capture efficiency test with continuous emission monitors. (63.825(g)(2) and 63.825(h)(2)). 5. Overall control efficiency determination using capture efficiency test and incinerator destruction efficiency test. (63.825(h)).
Monitoring Requirements	1. Hourly recording of flow rate from press to control device. (63.828(a)(1)). 2. Quarterly audit of continuous emission monitors. (63.828(a)(2)(i)). 3. Quarterly calibration of incinerator monitoring thermocouple(s). (63.828(2)(ii)). 4. Operation of continuous emission monitors. (63.828(a)(3)). 5. Measurement of incinerator operating parameters. (63.828(a)(4)). 6. Monitoring of capture system operating parameter. (63.828(a)(5)).

A. Applicability

The proposed rule would apply to each new and existing publication rotogravure or product and packaging rotogravure and wide web flexographic printing facility that is a major source, as defined under section 112(a) of the Act. A major source is one that emits or has the potential to emit, considering controls, 9.1 Mg/yr (10 tons/yr) or more of any one HAP or 22.7 Mg/yr (25 tons/yr) of any combination of HAP for all activities conducted at the facility. Publication rotogravure and product and packaging rotogravure and wide web flexographic printing operations at any major source that conducts other work would be subject to the proposed standards, regardless of the relative proportion of printing and non-printing work at the facility. Research or laboratory facilities are not subject to the provisions of the standards unless they are collocated with production lines.

The proposed rule uses the definition of research and laboratory facilities from section 112(c)(7) of the Act. This section provides that ''research or laboratory facility'' means any stationary source whose primary purpose is to conduct research and development into new processes and products, where such source is operated under the close supervision of technically trained personnel and is not engaged in the manufacture of products for commercial sale in commerce, except in a *de minimis* manner.

Research activities include those activities that are employed to develop a new rotogravure or flexographic ink, coating or other material; a new substrate or end product; and may also include activities devoted to optimizing the manufacture of the product. Once a facility determines that the manufacture of this product is viable, the EPA believes that additional activities are likely to be beyond the research phase.

As noted in § 63.821(a)(1), the proposed printing and publishing rule would apply to facilities that are major sources as defined in 40 CFR 63.2. An important consideration in the definition of ''major source'' is a given plant site's ''potential to emit.'' The ''potential to emit'' is defined in 40 CFR 63.2 as follows: '' 'Potential to emit' means the maximum capacity of a stationary source to emit a pollutant under its physical and operational design. Any physical or operational limitation on the capacity of the stationary source to emit a pollutant, including air pollution control equipment and restrictions on hours of operation or on the type or amount of material combusted, stored, or processed, shall be treated as part of its design if the limitation or the effect it

would have on emissions is Federally enforceable.''

A key aspect of the potential to emit definition is that restrictions must be Federally enforceable. Examples of restrictions that would be considered Federally enforceable are listed in a definition in 40 CFR 63.2.

The EPA believes that there are printing and publishing facilities whose actual emissions of HAP are substantially less than ''major'' amounts (i.e., more than 10 tons per year of any single HAP, or more than 25 tons per year from the sum of all HAP emitted). Many of these facilities, however, would be considered ''major sources'' that are subject to the proposed rule because there is no Federally enforceable restriction in place that limits their potential to emit HAP. The EPA believes that the this rule should provide a mechanism for such facilities to accept and document such restrictions.

The EPA proposes, in § 63.821(a)(2) through (3) of the proposed rule, that if owners or operators commit to using no more than 9.1 Mg (10 tons) per 12 month period of each HAP and less than 22.7 Mg (25 tons) per 12 month period of any combination of HAP at the entire facility, including materials used for source categories or purposes other than printing and publishing, then the facility can be considered an area source. Each facility for which the owner or operator commits to the criteria stated in § 63.821(a)(2) would be subject only to the recordkeeping provisions in § 63.829(d) and the reporting provisions in § 63.830(d) of this subpart as long as the commitment is met for each 12 month period. If the commitment is not met for any 12 month period then the facility would be in violation of its commitment and would be considered a major source of HAP beginning the first month after the end of the first 12 month period in which either of the HAP use thresholds was exceeded. As a major source of HAP, each such facility would be subject to the provisions of this subpart as noted in § 63.821(a)(1) and would no longer be eligible to use the provisions of § 63.821(a)(2).

The EPA believes that there are sources using more than 10 tons of an individual HAP or more than 25 tons of total HAP per 12 month period that may emit less than ''major'' amounts (e.g., sources using capture and control equipment that reduces HAP emissions), and for which the owner or operator may be willing to accept case-by-case operating restrictions that would ensure that the potential to emit does not exceed the major source threshold. The EPA is considering adding language to the final rule that would provide a mechanism for such sources. The EPA requests comment on: (1) Whether such language should be added; (2) the type of reporting and process required to establish the case-by-case commitment (in particular, how to establish throughput and content limitations and performance criteria for the capture and control equipment that would ensure area source status); and (3) the types of records that should be maintained to document compliance with the restrictions. In addition, the EPA requests comment on whether the level of recordkeeping and reporting should vary, depending on the level of emissions (as reflected by the throughput and content of the materials used, and performance of the capture and control equipment).

In general, rotogravure and wide web flexographic printing facilities are covered by the SIC codes listed in Table 2. However, facilities classified under other SIC codes may be subject to the proposed standards if the facility meets the definition of a major source and conducts rotogravure or wide web flexographic printing.

TABLE 2.—ROTOGRAVURE AND WIDE WEB FLEXOGRAPHIC PRINTING SIC CODES

SIC Code	Description
2295	Vinyl Coated or Laminated Fabric.
2392	House Furnishings, including Shower Curtains.
2647	Sanitary Paper Products.
2649	Wallcoverings.
2651	Folding Paperboard Boxes.
2671	Coated and Laminated Paper and Plastic Film for Packaging.
2673	Plastic Bags and Liners, Coated and Laminated.
2674	Uncoated Paper Bags and Sacks and Multiwall Shipping Sacks and Bags.
2711	Newspapers.
2721	Periodicals.
2754	Commercial Printing, Gravure.
2759	Commercial Printing, NEC.
3497	Laminated Aluminum Foil, Flexible Packaging.
3996	Hard Surface Floor Coverings.

Based on information obtained through an information collection request and information provided by the Gravure Association of America (GAA), there are an estimated 200 facilities that will be subject to the proposed standards. The combined HAP emissions from these facilities are estimated to be over 21,800 Mg/yr (24,000 tpy).

Affected Sources

The proposed rule would limit organic HAP emissions that result from publication rotogravure and product and packaging rotogravure and wide-web flexographic printing. The standard applies to HAP present in inks, ink extenders, solvents, coatings, varnishes, primers, adhesives, and other materials applied with rotogravure and flexographic plates. Printed items include magazines, advertising inserts, catalogs, flexible packaging, corrugated boxes, paper towels, newspapers, wall coverings, floor coverings, shower curtains, etc.

Sources in the publication rotogravure segment of the printing and publishing industry include but are not limited to ink and solvent storage tanks, ink mixing, printing, press and parts cleaning, proof and production presses and solvent recovery. Sources in the product/package rotogravure and wide-web flexography segments include the printing presses.

Various organic HAP are used in the printing industry. Organic HAP used include toluene, xylene, ethylbenzene, methyl ethyl ketone, methyl isobutyl ketone, methanol, hexane, dibutylphthalate, toluene diisocyanate, ethylene glycol and glycol ethers. These are the HAP expected to be emitted by the industry, however, the proposed standards apply to emissions of all organic HAP listed in section 112(b).

B. Proposed Standards for Affected Sources

In addition to the standards for affected sources as discussed below, the affected sources would be subject to the General Provisions which were promulgated in the **Federal Register** March 16, 1994 (59 FR 12408) under 40 CFR part 63, subpart A. The General Provisions stipulate that all affected sources subject to the proposed rule are also subject to, as appropriate, 40 CFR 63.4, 63.5, and 63.6.

The proposed rule requires each owner or operator who uses a control device or equipment to control HAP emissions to prepare an operation and maintenance plan in accordance with § 63.6. In addition to the information required in § 63.6, the proposed rule requires that the owner or operator of the control device or equipment include the following information: (1) The operation and maintenance criteria for each air pollution control device or equipment, including a standardized checklist to document the operation and maintenance of the equipment; (2) a systematic procedure for identifying malfunctions and for reporting them

immediately to supervisory personnel; and (3) procedures to be followed to ensure that equipment or process malfunctions due to poor maintenance or other preventable conditions do not occur.

The General Provisions also state that an owner or operator who uses an air pollution control device or equipment not listed in the proposed rule must submit to the Administrator for approval a description of the device, test data verifying the performance of the device or equipment for HAP and/or VOC emissions, appropriate operating parameters that would be monitored to establish compliance with the proposed standards, and a copy of the inspection and maintenance plan required under § 63.6. The authority to approve an alternate air pollution control device is retained by the Administrator and is not delegated.

Finally, § 63.6(g) allows an owner or operator of an affected source to use alternative means of compliance. This allows the development and use of new technology not known or not demonstrated at the time the rule was promulgated.

The affected sources for the proposed standards are defined as follows: (1) Each publication rotogravure facility (all publication rotogravure presses plus all associated operations including but not limited to ink and solvent storage tanks, ink mixing, printing, press and parts cleaning, proof and production presses and solvent recovery); and (2) each product or packaging rotogravure or wide-web flexographic press or group of presses controlled by a common solvent recovery system. The following paragraphs summarize the proposed standards for each affected source.

1. Publication Rotogravure Presses

The proposed standards for publication rotogravure facilities would apply to all new and existing affected sources. The proposed standards allow the use of control devices provided each facility achieves an overall control efficiency, taking into account capture and control device efficiency of 92 percent, when the organic HAP content of solvent borne inks and other materials used is equivalent to the volatile matter content. When non-HAP VOC or water is present in the inks or other materials applied, each control device must achieve a control efficiency such that the sum of the organic HAP recovered or destroyed, plus the water used, plus the VOC used, minus the organic HAP used makes up a minimum of 92 percent of the sum of the VOC used plus the water used. (Organic HAP emitted is less than 8 percent of the total volatile matter.)

Compliance with the proposed standard would be demonstrated by a monthly mass balance when a solvent recovery system is used. Compliance for control devices other than solvent recovery systems would be shown on a continuous basis based on a specific operating parameter or parameters, such as temperature for incinerators.

2. Package and Product Rotogravure and Wide-web Flexographic Presses

The proposed standards for package and product rotogravure and wide-web flexographic presses would apply to all new and existing affected sources. The proposed standards allow the use of low HAP materials, control devices, or a combination of low HAP materials and control devices. Presses applying any combination of inks, coatings, primers, adhesives, solvents, extenders and other materials such that the monthly mass weighted organic HAP contents of these materials is equal to or less than 0.20 kg per kg of solids applied, or equal to or less than 0.04 kg per kg of materials applied would be in compliance. The proposed standards allow the use of control devices, provided that each control device used for the control of HAP achieves an overall control efficiency, taking into account capture and control device efficiency of 95 percent. Presses would also be allowed to comply with the proposed standards by using control systems provided that the HAP emissions are equal to or less than 0.20 kg per kg of solids applied. In cases where a solvent recovery system is used to control emissions from more than one press, the group of commonly controlled presses can be considered a single affected source for the purpose of complying with the overall control device efficiency standard or the overall organic HAP emission rate standard.

Compliance with the proposed standard would be demonstrated either by a monthly mass balance or through the use of continuous emission monitors when a solvent recovery system is used. Compliance for control devices other than solvent recovery systems would be shown on a continuous basis based on a specific operating parameter or parameters, such as temperature for incinerators. Compliance with the proposed organic HAP content level standards would be shown on a monthly basis for compliant materials. Sources demonstrating compliance by a combination of means would demonstrate control device efficiency as described above and demonstrate mass average organic HAP content on a monthly basis.

C. Compliance Dates

The proposed rule would require all existing sources to comply no later than three years after the effective date of the standards. In addition, the proposed rule adopts the compliance dates specified in § 63.6(b) and § 63.6(c). New sources must comply with the standard upon startup or the effective date of this regulation, whichever is later.

D. Compliance Extensions

Because of the length of time necessary to properly specify, order and install additional capture and control equipment some existing facilities may need to request a compliance extension. Similarly, some existing facilities choosing to adapt to lower HAP ink (and other press material) formulations may have to select and test substitutes for a large number of specific applications. These existing facilities may need to request a compliance extension.

Section 63.6(i) of 40 CFR part 63 provides the requirements for requesting an extension of compliance with a relevant standard established under part 63. Specifically, § 63.6(i)(4) allows the issuance of a permit granting an extension of up to one year to comply with the standard, if such additional period is necessary for the installation of controls. Section 63.6(i)(4)(i)(B) requires requests for compliance extensions to be submitted no later than 12 months before the affected source's compliance date.

E. Compliance Testing and Monitoring

In addition to the specific testing and monitoring requirements specified below for each affected source, the proposed rule adopts the testing requirements specified in § 63.7.

1. Test Methods and Procedures

a. Publication Rotogravure. For facilities using solvent recovery systems, the overall control efficiency would be determined using a mass balance over the period of each calendar month. Owners or operators would be required to measure the amount of all materials used during the month and to determine the organic HAP and volatile matter content of these materials. Owners or operators would also be required to measure the amount of volatile matter recovered by the solvent recovery system during the month and to calculate the overall HAP control efficiency. The organic HAP content would be determined by proposed EPA Method 311, or from manufacturers data when these data are equivalent to those obtained from proposed EPA Method 311. When it is not possible to

determine the organic HAP content using proposed EPA Method 311, the owner or operator shall submit to the Administrator an alternative technique for determining the organic HAP content. The volatile matter content of the materials used shall be determined by manufacturers formulation data or by Method 24A of 40 CFR part 60, appendix A.

For facilities using incinerators, owners or operators must determine the incinerator destruction efficiency and the capture efficiency. Incinerator destruction efficiency would be determined using EPA Method 1 or 1A, EPA Method 2, 2A, 2C or 2D, EPA Methods 3 and 4, and EPA Method 25 or 25A of 40 CFR part 60, appendix A. Capture efficiency would be confirmed using Procedure T to verify the presence of a permanent total enclosure or determined using the capture efficiency protocol specified in 40 CFR 52.741 (a)(4)(iii).

b. Package and Product Rotogravure and Wide-web Flexography. Owners or operators may comply by means of use of materials meeting the organic HAP threshold requirements or through use of control equipment, or through a combination of low organic HAP materials and control equipment. The proposed standards for organic HAP emissions would require compliance with an organic HAP content threshold based on solids content (kg of organic HAP per kg of solids applied), an organic HAP threshold based on material (kg of organic HAP per kg of materials applied), an overall organic HAP control efficiency (percent), or an organic HAP emission rate (kg of organic HAP emitted per kg of solids applied).

The organic HAP content of inks, coatings, primers, adhesives, solvents and other materials applied on the press would be determined by proposed EPA Method 311, or from manufacturers data when these data are equivalent to those obtained from proposed EPA Method 311. When it is not possible to determine the organic HAP content using proposed EPA Method 311, the owner or operator shall submit to the Administrator an alternative technique for determining the organic HAP content.

The facility may rely on manufacturer's data to determine the organic HAP content when these data are equivalent to those obtained from proposed EPA Method 311. The mass of each ink, coating, primer, adhesive, solvent and other material applied would be determined using company records. If diluent solvents or other ingredients are added to a material prior to application, then the total organic HAP fractions and mass must be adjusted appropriately to account for such additions. These values would be required for each monthly period; however, only changes in formulation would require re-determination of total organic HAP weight fraction. The proposed standards would then require the owner or operator to calculate the average mass of organic HAP in materials applied per mass of solids applied.

If an owner or operator is seeking to comply by using materials with a weighted average HAP content below the organic HAP content threshold requirement or the low solids organic HAP threshold requirement, the owner or operator would need to determine the organic HAP content and solids content. If no changes in formulation as applied occurred, then a re-calculation of the organic HAP level would not be required.

If a control device is used, the proposed standards require the owner or operator to demonstrate compliance with the overall control efficiency requirement of at least 95 percent. Alternately, the owner or operator may determine the overall control efficiency of the equipment and the HAP content and solids content of the materials applied. To comply by this combination of means, the owner or operator would have to demonstrate a HAP emissions limitation of 0.20 kg HAP per kg of solids applied.

For a solvent recovery system, overall control efficiency would be determined using a liquid-liquid mass balance, or by conducting an initial performance test of capture efficiency and using continuous emissions monitors. The liquid-liquid mass balance determination would be made every month. Owners or operators would be required to measure the amount of all materials applied during the month and to determine the volatile matter content of these materials. Owners or operators measuring overall control efficiency using a liquid-liquid mass balance would also be required to measure the amount of volatile matter recovered by the solvent recovery system during the month and to calculate the overall HAP control efficiency.

Owners or operators using solvent recovery systems may also demonstrate compliance by conducting an initial performance test of capture efficiency and operating continuous emissions monitors to determine the total volatile matter content at both the inlet to and the outlet from the carbon adsorber such that the percent efficiency of the carbon adsorber can be calculated for each calendar month. The owner or operator must verify the presence of a permanent total enclosure using Procedure T, or determine the capture efficiency using the protocol specified in 40 CFR 52.741(a)(4)(iii). The overall organic HAP control efficiency must be calculated as the product of the capture efficiency and the carbon adsorber efficiency.

For control devices other than carbon adsorbers, the overall control efficiency would be based on capture efficiency and destruction efficiency. Capture efficiency would be determined based on the procedure specified in 40 CFR 52.741(a)(4)(iii), unless the operation is performed within a permanent total enclosure. An enclosure that meets the requirements of a permanent total enclosure as specified by Procedure T of 40 CFR 52.741 would have a capture efficiency of 100 percent.

The destruction efficiency of a control device other than a carbon adsorber would be determined using EPA Method 1 or 1A, EPA Method 2, 2A, 2C or 2D, EPA Methods 3 and 4, and EPA Method 25 or 25A of 40 CFR part 60, appendix A. The owner or operator would record such process conditions as may be necessary to determine the conditions of the performance test.

To determine the value of an incinerator operating parameter that will demonstrate continuing compliance, the time weighted average of the values recorded during the performance test shall be computed. For a thermal incinerator, the owner or operator shall establish as the operating parameter the minimum combustion temperature. For a catalytic incinerator, the owner or operator shall establish as the operating parameters the minimum gas temperatures both upstream and downstream of the catalyst bed. These minimum temperatures are the operating parameters used to demonstrate continuing compliance.

The affected source is in compliance if the overall HAP control efficiency is at least 95 percent. Alternately, the source can comply on the basis of HAP emission limitation. The facility would be required to determine the organic HAP content and solids content of inks, coatings, primers, adhesives, solvents and other materials applied on the press. The mass of each ink, coating, primer, adhesive, solvent and other material applied would be determined using company records. If diluent solvents or other ingredients are added to a material prior to application, then the total organic HAP content, solids content and mass must be adjusted appropriately to account for such additions.

The organic HAP content would be determined from proposed EPA Method 311 or, when this is not possible the owner or operator shall submit to the Administrator, an alternative technique for determining the organic HAP content. Manufacturer's formulation data may be used provided that the data are equivalent to those obtained using proposed EPA Method 311. The volatile matter and solids content of the materials used shall be determined by manufacturers formulation data or by Method 24 of 40 CFR part 60, appendix A.

These values would be required for each monthly period. The proposed standards would then require the owner or operator to calculate the average mass of organic HAP in materials applied per mass of solids applied. The overall control efficiency as determined above would be used to determine the HAP emission limitation. To comply by this combination of means, the owner or operator would have to demonstrate a HAP emissions limitation of 0.20 kg HAP per kg of solids applied.

2. Monitoring Requirements

Monitoring is required by the proposed standards to determine whether a source is in compliance. For owners or operators using thermal or catalytic incinerators, this can be accomplished by measuring site-specific operating parameters, the values of which are established by the owner or operator during the initial compliance test. The operating parameter value is defined as the minimum or maximum value established for a control device or process parameter that, if achieved by itself or in combination with other operating parameter values, determines that an owner or operator is complying with the applicable emission limitation or standards. This type of monitoring would be required for those emission points for which the standards are expressed as a percent control, or for affected sources using control devices to achieve an organic HAP emission limit. In addition, the owner or operator is expected to install and operate the monitoring equipment properly.

The proposed rule would require temperature to be monitored, using a continuous recorder, for incinerators. For catalytic incinerators, temperature monitors would be placed immediately before and after the catalyst bed. For other incinerators, the temperature monitor would be placed in the firebox or in the ductwork immediately downstream of the firebox and before any substantial heat exchange occurs. All monitoring equipment would be installed, calibrated, maintained, and operated according to manufacturer's specifications.

The proposed standards would require each owner or operator to establish a range of values for each of these monitored parameters during the initial performance test. As long as the control device is operated within the established ranges, the proposed emission standards are considered to be met. Consequently, exceedances of these parameters would be considered a violation of the standards since operating the control device outside of the established ranges may reduce the efficiency of the control device.

Owners or operators of publication rotogravure sources operating solvent recovery systems would be required to conduct monthly mass balances as described in the section II.E.1 of the preamble. Owners or operators of other sources operating solvent recovery systems would be required either to conduct monthly mass balances as described in the previous section or to operate continuous emission monitors. The continuous emission monitors would be used to determine the total volatile matter concentration at both the inlet to and the outlet from the carbon adsorber, such that the percent efficiency of the carbon adsorber can be calculated for each calendar month.

Owners or operators of package or product rotogravure or flexographic printing facilities complying by means of use of materials meeting the applicable HAP content threshold standards would demonstrate compliance through recordkeeping as described in section II.E.1 of the preamble.

Under 40 CFR 63.6(g), an owner or operator of an affected source may request the use of alternative methods of emission reduction for complying with design, equipment, work practice, or operational emission standards, or combination thereof, established under this part. Under the proposed rule, an owner or operator of an affected source may also use control devices other than those specifically identified in the proposed rule as a means for achieving compliance with any portion of the rule. If devices other than those identified are used, the proposed standards would require the owner or operator to submit the parameters to be monitored to the Administrator for approval. The authority to approve the use of alternate control devices and the parameters to be monitored is retained by the Administrator and is not delegated.

Section 114(a)(3) of the Act requires enhanced monitoring and compliance certifications of all major stationary sources. The annual compliance certifications certify whether compliance has been continuous or intermittent. Enhanced monitoring shall be capable of detecting deviations from each applicable emission limitations or standard with sufficient representativeness, accuracy, precision, reliability, frequency, and timeliness to determine if compliance is continuous during a reporting period. The monitoring in this regulation satisfies the requirements of enhanced monitoring.

F. Recordkeeping and Reporting Requirements

The proposed rule proposes to adopt the requirements contained in 40 CFR 63.9 and 40 CFR 63.10. The proposed rule, however, contains additional or clarifying elements and changes certain time periods allowed for submitting or responding to certain reports and requests required in § 63.10. These elements and changes are summarized below for each of the operations for which standards are being proposed.

1. Recordkeeping Requirements

a. Publication Rotogravure. Records must be maintained of the organic HAP and volatile matter content, as received, and the monthly usage of all inks, solvents, varnishes, adhesives and other materials applied on publication rotogravure presses. Where incinerators are used, records must be maintained of the overall control efficiency and all test results, data, and calculations used in determining the overall control efficiency.

Where solvent recovery systems are used, records must be maintained of the overall control efficiency, all test results, data, and calculations used in determining the overall control efficiency, and the monthly material balances used to demonstrate compliance.

b. Packaging and Product Rotogravure and Wide-web Flexography. Records must be maintained of the organic HAP, volatile matter and solids content, as received, and the monthly usage of all inks, solvents, varnishes, primers, adhesives and other materials applied on packaging and product rotogravure presses and wide-web flexographic presses. Each owner or operator would be required to keep records of the equipment monitoring parameter measurements specified in the proposed rule. For an incinerator other than a catalytic incinerator, continuous records must be maintained of the firebox temperature (or temperature in the ductwork immediately downstream of the firebox). For a catalytic incinerator, continuous records must be maintained

of the gas stream temperature immediately before and after the catalyst bed. For both types of incinerators, records must be maintained of the overall control efficiency and all test results, data, and calculations used in determining the overall control efficiency.

For carbon adsorbers, records must be maintained of the overall control efficiency, all test results, data, and calculations used in determining the overall control efficiency.

2. Reporting Requirements

The proposed rule would require four basic types of reports: (1) Initial notification, (2) notification of compliance status, (3) periodic reports, and (4) other reports. In addition, the proposed rule would require that the results of any performance test required under § 63.7 be reported no later than 60 days after the completion of the test. A permit application as required under 40 CFR part 70 may be used in lieu of the initial notification provided the same information is contained in the permit application as required for the initial notification.

As stated above, the proposed standards adopt the reporting requirements contained in § 63.9(a) through § 63.9(e) and § 63.9(h) through § 63.9(j) and 63.10 (a), (b), (d), and (f). However, the time period allowed for the Administrator to notify the owner or operator in writing of approval or disapproval of the request for an adjustment to a particular time period or postmark deadline submitted under § 63.9(i) has been changed to within 30 calendar days of receiving sufficient information to evaluate the request, rather than 15 calendar days as provided for in § 63.9(i)(3).

Sections 63.9 and 63.10 identify the type of generic information to be included in the initial notification, notification of compliance status, and other reports and, therefore, this information is not repeated in this preamble. The following paragraphs summarize the additional information specific to the printing and publishing rule that should be included in the notification of compliance status and the type of information to be included in the periodic reports.

a. Publication Rotogravure. The notification of compliance status should identify the control devices that were used to demonstrate that the facility was in compliance. Specific reporting requirements are dependent on how an owner or operator chooses to comply with the regulation. If solvent recovery systems are used and liquid-liquid material balances are conducted, semiannual reports would be required that contain information on all months when the material balances were not in compliance with the standards.

If incinerators are used, semiannual reports would be required that contain information on all days when any 3-hour average temperature was below the average temperature established during the most recent performance test during which compliance was demonstrated. The first three hour period will commence when the affected source begins operation or restarts following a shutdown period. Subsequent three hour periods commence every three hours of operation. When an affected source shuts down during a three hour period, the average temperature for the period between the commencement of the three hour period and shut down would be used for the purpose of compliance demonstration.

If incinerators are used, or if solvent recovery systems are used but liquid-liquid material balances are not conducted, semi-annual reports would be required that contain information on all days when for any three hour period, the average value of the site-specific operating parameter used to monitor capture system performance was greater than or less than (as appropriate) the operating parameter value established for the capture system.

If a semiannual report is required for the period covered by the first semiannual report of the reporting year, a semiannual report would be submitted for the following semiannual period even if no exceedances occurred in that period. If no exceedances occur during the entire reporting year, each owner and operator would submit annual statements indicating that each affected facility has been in compliance.

b. Packaging and Product Rotogravure and Wide-web Flexography. The notification of compliance status should identify whether low-HAP materials or control devices were used to demonstrate that the facility was in compliance, and, for control devices and capture systems, what operating parameters were identified for continuous monitoring in order to ensure compliance with the proposed standards. Specific reporting requirements are dependent upon how an owner or operator chooses to comply with the regulation.

Owners and operators complying using low-HAP materials would be required to report each exceedance of the organic HAP content level or the low solids organic HAP content level. These reports would be submitted on a semiannual basis.

If incinerators are used, semiannual reports would be required that contain information on all days when any 3-hour average temperature was below the average temperature established during the most recent performance test during which compliance was demonstrated. The first three hour period will commence when the affected source begins operation or restarts following a shutdown period. Subsequent three hour periods commence every three hours of operation. When an affected source shuts down during a three hour period, the average temperature for the period between the commencement of the three hour period and shut down would be used for the purpose of compliance demonstration.

If solvent recovery systems are used, and the owner or operator chooses to demonstrate compliance by means of a liquid-liquid mass balance, semiannual reports would be required that contain information on all months when the material balances were not in compliance with the standards.

Owners or operators of affected sources complying with the HAP emission limitation using a combination on control devices and low HAP materials would be required to submit semiannual reports containing information on control device exceedances as described above, in addition to reports of exceedances of monthly calculated HAP emission limitations.

If incinerators are used, or if solvent recovery systems are used but liquid-liquid material balances are not conducted, semi-annual reports would be required that contain information on all days when for any three hour period, the average value of the site-specific operating parameter used to monitor capture system performance was greater than or less than (as appropriate) the operating parameter value established for the capture system.

If a semiannual report is required for the period covered by the first semiannual report of the reporting year, a semiannual report would be submitted for the following semiannual period even if no exceedances occurred in that period. If no exceedances occur during the entire reporting year, each owner and operator would submit annual statements indicating that each affected facility has been in compliance.

III. Summary of Environmental, Energy, and Economic Impacts of the Proposed Standards

A. Emission Reductions

1. Existing Facilities

For the existing publication rotogravure printing industry (27 facilities), the nationwide baseline HAP emissions are estimated to be 17,500 Mg/yr (19,200 tpy). Implementation of the proposed regulation would reduce these emissions by 4,750 Mg/yr (5,220 tpy), or 27 percent. For the existing product and packaging rotogravure and wide web flexographic printing industry (approximately 1,200 facilities), the nationwide baseline HAP emissions are estimated to be 4,200 Mg/yr (4,620 tpy). Implementation of the proposed regulation would reduce these emissions by 1,940 Mg/yr (2,140 tpy), or 46 percent.

2. New Facilities

It is expected that any new facilities would be designed to meet the proposed standards because of other federal, state and local environmental and occupational safety regulations. No net emission reduction from new facilities is expected as a result of the proposed regulation.

B. Secondary Environmental Impacts

Secondary environmental impacts are considered to be any air, water, or solid waste impacts, positive or negative, associated with the implementation of the proposed standards. These impacts are exclusive of the direct organic HAP air emission reductions discussed in the previous section.

Most of the organic HAP are VOC. Capture and control of HAP which is presently emitted will result in a decrease in VOC emissions. It is expected that some product and packaging rotogravure and wide-web flexographic facilities will comply with the proposed standard by substituting non-HAP materials for HAP presently in use. In some cases, the non-HAP materials will be VOC, however, in other cases, non-VOC (e. g. water) materials will be used.

The use of newly installed or upgraded control devices will result in greater electricity consumption. Increases in emissions of sulfur dioxide, nitrogen oxides and carbon dioxide from electric utilities could result. In the product and packaging rotogravure and wide-web flexographic printing segments, some plants will comply by installing or upgrading incinerators. Supplemental fuel, typically natural gas, will be used, particularly for thermal incinerators. Combustion of this fuel will result in additional carbon dioxide emissions and may result in additional emissions of nitrogen oxides.

Facilities converting to waterborne materials as a means or partial means of compliance may have reduced RCRA hazardous waste disposal if the status of the waste ink changes from hazardous to nonhazardous. An increase in wastewater discharge may occur if waste ink and waterborne washup materials are discharged to publicly owned treatment works (POTW). There is no assurance that facilities converting to low-HAP formulations will adopt waterborne, rather than non-HAP VOC based materials. While EPA expects wastewater and solid waste impacts in general to be insignificant, it is aware of a frequent practice in the printing and publishing industry of using shop towels for cleaning. This generates a waste load which may be sent to industrial laundries (and ultimately to POTW) in the case of cloth towels, or to landfills in the case of disposable towels. EPA invites submission of comments and data on how effluent from industrial laundries may be affected by this regulation.

New and upgraded catalytic incinerators will require catalyst. Catalyst life is estimated to be in excess of ten years. Spent catalyst will represent a small amount of solid waste and in some cases the spent catalyst will be regenerated by the manufacturer for reuse. Activated carbon used in solvent recovery systems is returned to the manufacturer at the end of its useful life and converted to other salable products. No solid waste impact is expected from this source.

C. Energy Impacts

The operation of new and upgraded control devices will require additional energy. Capture and control of increased volumes of solvent laden air will require additional fan horsepower. Operation of incinerators, particularly thermal incinerators will require supplemental fuel (typically natural gas). Operation of solvent recovery systems will require steam regeneration of the activated carbon; boilers are typically fired with natural gas or fuel oil.

The total additional electrical energy required to meet the proposed standard is estimated to be 55 million kilowatt-hours (kWh) per year. This includes 32 million kWh for publication rotogravure, 20 million kWh for product and packaging rotogravure and 3.0 million kWh for wide web flexography. Fuel requirements total 1.0 trillion Btu per year. This includes 580 billion Btu for publication rotogravure, 370 billion Btu for product and packaging rotogravure and 58 billion Btu for wide web flexography.

D. Cost Impacts

The total capital and annualized costs (1993 dollars) attributable to compliance with the proposed standards have been estimated for existing sources. It is expected that new facilities would meet the proposed regulations as a result of other federal, state and local environmental and occupational safety regulations.

1. Capital Costs

Capital costs would be incurred in upgrading existing capture and control systems at those facilities presently operating control devices that do not meet the proposed standards. Facilities which do not presently operate control devices would be expected to capitalize a period of downtime necessary to convert to low-HAP materials. Total capital costs are estimated at $133 million. These costs include $92 million at publication rotogravure facilities for improved capture and upgrades to solvent recovery systems to handle increased volumes of pressroom air.

Capital costs at product and packaging rotogravure facilities are estimated at $34 million. These costs include improved capture and upgrades to control devices for facilities presently operating control devices. For facilities not presently operating control devices the costs are based on capitalized downtime.

Capital costs at wide-web flexographic facilities are estimated at $7.2 million. These costs include improved capture and upgrades to control devices for facilities presently operating control devices.

2. Annual Costs

Annual costs of the proposed standards have been estimated at $42 million per year. These costs include capital recovery over a ten year period, operating costs for the newly installed and upgraded capture and control systems, and costs for recordkeeping, reporting and monitoring. These are net costs after taking into account the costs presently being incurred for the baseline control level. The annual costs include $21 million per year for publication rotogravure, $17 million per year for product and packaging rotogravure and $3.6 million per year for wide-web flexography.

E. Economic Impacts

The preliminary economic impact analysis for the selected regulatory alternative shows that the estimated

price increases for printing products produced by the affected industries is an average of 1.34 percent for those using publication and product/packaging rotogravure presses, and less than 0.01 percent on average for those using wide-web flexographic presses. The estimated decreases in the quantity of printing production is an average of 3.85 percent and 0.53 percent, respectively. No firms or facilities are at risk of closures as a result of the standard.

For more information, consult the background information document.

IV. Process Descriptions and Control Technologies

A. Process Descriptions

1. Rotogravure Printing

Nearly all gravure printing is done by rotogravure. Gravure printing is a printing process in which an image (type and art) is etched or engraved below the surface of a plate or cylinder. On a gravure plate or cylinder, the printing image consists of millions of minute cells. Rotogravure requires very fluid inks which will flow from the cells to the substrate at high press speeds. In addition to inks, other materials including adhesives, primers, coatings and varnishes may be applied with rotogravure cylinders. These materials dry by evaporation as the substrate passes through hot air dryers.

Different colored inks, or other materials are applied in succession as the web passes from station to station. A separate cylinder, ink supply and dryer are required for each station. After the ink is applied at each station, the web is dried before being printed by the next station. Solvent borne or waterborne ink systems can be used but these ink systems are not interchangeable. Both the printing cylinders and the drying systems are specific to the ink system in use. The evaporated components of the ink and other materials may contain HAP to varying extents. Rotogravure can be divided into the publication and product/packaging segments. Because of the expense and complexity of rotogravure cylinder engraving, it is particularly suited to long run printing jobs.

a. Publication Rotogravure. Publication rotogravure printing focuses on magazine, catalog and advertising insert printing. All U. S. publication rotogravure plants presently use toluene/xylene based ink systems, and operate solvent recovery systems based on carbon adsorption with steam regeneration. Recovered solvent is sold back to the ink manufacturers. Press capture systems vary depending on the age of the press. Typically, four stations are required to print each side of the web. Publication rotogravure presses in operation in the U. S. have up to 16 stations. It is generally believed in the industry that publication rotogravure equipment is capable of higher quality printing than competing processes.

The primary solvent in publication rotogravure ink is toluene, a HAP. At some plants xylenes and ethyl benzene, also HAP, and non-HAP aliphatic solvents are present in the solvent blend and are used, emitted, recovered and handled in the same manner as toluene. The plants purchase ink containing solvent and add additional solvent to obtain the desired viscosity.

HAP emissions result from incomplete recovery of captured HAP, and from incomplete capture. Activated carbon solvent recovery systems are suitable for control of toluene and similar aromatic solvents. High control efficiencies can be achieved, however some solvent is unavoidably emitted as a result of thermodynamic limitations (the toluene-carbon/toluene-air equilibrium) and flow irregularities (e.g. channelling through the carbon bed). Some HAP is not captured in the dryer exhaust. This includes HAP which evaporates from the ink fountains into the pressroom, HAP which is evaporated from the web in the dryers but is then swept out of the dryer as the web travels towards the succeeding press station, HAP which remains in the web after the last dryer which evaporates during additional processing (slitting, folding, stitching, etc.) and HAP which leaves the plant trapped in the magazine, catalog or advertising insert.

b. Packaging and Product Rotogravure. The rotogravure printing operation is, in many cases, a relatively small part of the total package or product production process. This section briefly describes the various types of packages and products that include rotogravure printing in their manufacture, and notes what production steps are required in addition to the rotogravure printing step.

Folding Cartons. Folding carton packages are used for a wide variety of products including wet and dry foods, beverages, bakery items, and candy. They are also used for nonfood products such as detergents, hardware, paper goods, cosmetics, medical products, tobacco products, and sporting goods.

The folding carton is made from one of several grades of paperboard. It may be printed, laminated or coated, or may be shipped unprinted to be used with another label or wrapper. Besides printing, operations in the manufacture of folding cartons include creasing, trimming, die-cutting, coating, and gluing. The cartons are shipped flat, to be assembled and filled by the customer.

Flexible Packaging. Flexible packaging materials start out as rolls of paper or foil, or beads of plastic resin, and are ''converted'' into a package or roll of packaging material. Flexible package manufacturers are sometimes referred to as ''converters''. Converters produce a wide range of non-rigid packages made of paper, plastic film, foil laminates, and combinations of these substrates.

One portion of the flexible packaging industry provides fully printed packaging materials (designated ''preformed specialty bags'') to contract packagers. Another portion provides combination or laminated materials (converted wrap) for printing and/or final packing by captive packaging operations.

Labels and Wrappers. Labels and wrappers include roll and sheet labels applied to cans, unprinted cartons, composite cans, bottles and other containers, tags, and self-adhesive label products. Paper is the common substrate, but laminates and foil are also used. The industry makes a distinction between labels and wrappers, which are package components, from a product that becomes the entire package and should be called a flexible package.

Gift Wraps. About 90 percent of all gift wraps are printed. They are produced by greeting card companies and by label and flexible packaging firms. Rotogravure printing is particularly suitable for producing the continuous patterns used on gift wrap.

Wallcoverings. The wallcovering industry is a traditional user of rotogravure. The principal types of wallcoverings are prepasted paper, prepasted paper-backed vinyl, fabric-backed vinyl, and specialty items (e.g., metallics, grass cloth, rice paper). The steps in manufacturing wallcoverings include printing the paper and laminating it to the backing sheet.

Vinyl Printing. These products consist of auto upholstery, furniture upholstery, tablecloths, decorative trim, and shower curtains. Rotogravure dominates this product area because of the complex repeat patterns (e.g., woodgrain), and the requirement, in many cases, for overcoating that is readily applied using a rotogravure cylinder. Printing is performed on unsupported vinyl, supported vinyl (backed with fabric or paper), and paper substrate that is then coated with vinyl.

Decorative Laminates. These products consist of solid, thermoset laminates used in furniture and construction, and other laminates, principally wood grain veneers, widely used in furniture.

Floor Coverings. Rotogravure presses are used to decorate and apply texture and finish to sheet vinyl floor coverings. Rotary screen printing is sometimes used in combination with gravure. Rotogravure is also used to print transfer papers used to decorate vinyl tile.

Tissue Products. Some type of printing process is used to apply color patterns to paper towels, bathroom tissue, and napkins. The older paper mills producing tissue products were typically equipped with rotogravure presses.

Product and packaging rotogravure differs from publication rotogravure with respect to the materials used, the applicable control devices, and the decreased importance of the actual printing process in an overall manufacturing process. Packaging and product rotogravure printing uses a wide variety of different ink systems, including the aromatic HAP based ink systems common to publication rotogravure, solvent based non-HAP ink systems, and waterborne ink systems. Numerous specially mixed colors are applied at various times in this industry segment, in contrast to the publication segment which primarily applies four basic colors. In addition, a wider range of materials are applied with rotogravure cylinders in this segment of the industry. A variety of coatings, adhesives and primers are applied at print stations on rotogravure presses. Because of the variety of materials applied, the approach to HAP and VOC control in packaging and product rotogravure facilities varies. In addition to the activated carbon based solvent recovery systems used by the publication segment, packaging and product gravure facilities also use a variety of thermal and catalytic oxidizers. Many facilities operate without significant HAP use and do not have control devices.

In product and packaging rotogravure facilities, HAP is contained in both the printing inks and in other materials (adhesives, coatings) that are applied as part of a continuous manufacturing process. The predominant type of ink is based on nitrocellulose resin, with some polyamide inks. Solvent systems include aromatic, aliphatic and oxygenated hydrocarbon solvent inks, and water-based inks.

2. Wide-Web Flexography

Flexographic printing is considered to be the application of words, designs and pictures to a substrate by means of a printing technique in which the pattern to be applied is raised above the printing plate and the image carrier is made of rubber or other elastomeric materials. For the purposes of the proposed regulation, flexographic presses capable of printing substrates of 18 inches in width or greater are wide-web flexographic presses. Because of the ease of plate making and press set up, flexographic printing is more suited to short production runs than gravure.

Flexographic inks must be very fluid to print properly. Flexographic inks include both waterborne and solvent based systems. Solvents used must be compatible with the rubber or polymeric plates; thus, aromatic solvents are not used. Some of the components of solvent based flexographic ink include ethyl, n-propyl and i-propyl alcohols; glycol ethers, aliphatic hydrocarbons, and esters.

Wide web flexographic presses are used to print flexible and rigid packaging; newspapers, magazines, and directories; paper towels, tissues etc; and printed vinyl shower curtains and wallpaper. Substrates include polyolefins, polystyrene, polyesters, glassine, tissue, sulfite, kraft and other paper stocks, aluminum foil, paperboard and corrugated cardboard.

Flexographic presses can be divided into three main types depending on the relative relationship of the print stations. *Stack presses* have individual print stations oriented vertically with the unwind and rewind sections on the same side of the print stations. Stack presses are easily accessible for rapid changeovers between press runs. *Common impression presses* have the print stations around the circumference of a single large impression cylinder. The web is constantly supported between print stations, which is an advantage for printing on stretchable materials. *In-line presses* have the print stations in a horizontal row (the geometry is similar to rotogravure presses). Most flexographic printing (including all flexographic newspaper and corrugated carton printing) is done with waterborne inks. Waterborne inks which contain no HAP are available for some applications. Some waterborne inks contain relatively low proportions of HAP, principally ethylene glycol and glycol ethers. Most solvent based flexographic inks contain little or no HAP. Capture and control devices used with solvent based inks are usually designed, permitted and operated for VOC control.

B. Control Techniques

There are two approaches to limitation of HAP in the printing and publishing industry. The first approach is to improve capture and control systems or to add control devices where none are in use. Capture and control can be addressed separately, although in many cases, improved capture is achieved through an increase in the amount of air handled. This can necessitate upgrades to existing control devices. The second approach, focusing on pollution prevention, is to substitute low HAP or HAP-free materials for materials (inks, coatings, varnishes, adhesives, primers, etc.) presently in use.

1. Capture Systems

Capture systems are designed to collect solvent laden air and direct it to a control device. In rotogravure and flexographic printing, solvent is removed from the printed substrate by evaporation in a dryer. The exhaust from the dryer can be ducted to a control device. Additional systems are often used to collect solvents which evaporate from other parts of the printing press, as well as those which escape from the dryer. In addition, pressroom ventilation air can be exhausted to a control device.

Differences in capture efficiency contribute much more to the variation in overall efficiencies than the choice of control device. Reported capture efficiencies ranged from estimates of less than 50 percent to the 100 percent capture which is assumed for systems meeting the requirements of permanent total enclosures. Capture systems can be improved through collection of additional solvent laden air from the press area and through construction of additional hooding and press enclosures. A capture efficiency of 100 percent can be assumed for presses that meet the requirements of a permanent total enclosure.

a. Publication Rotogravure. Within the publication rotogravure industry, all presses have dryer exhaust gases routed to the solvent recovery system. Additional capture systems include dryer hood systems, partial upper deck enclosures, full upper deck enclosures, enclosed presses, permanent total enclosures, room enclosures, rooms operated under negative pressure and floor sweeps. Typically, solvent laden air captured from several presses is combined and treated with a common solvent recovery system. The individual presses may have different capture devices, and different capture efficiencies.

b. Product and Package Gravure. In the product and package gravure industry, many facilities use low VOC (and low-HAP) inks and coatings. Dryer exhausts from these facilities may be captured and vented to the atmosphere without the use of a control device. Where solvent based inks are in use, more elaborate capture and control systems may be present. Capture systems in use at product and packaging gravure facilities include combinations of dryer exhausts, floor sweeps, collection ducting, hoods, press enclosures, permanent total enclosures, room enclosures, negative pressure pressrooms, partial enclosures and ink pan covers. With the exception of permanent total enclosures, none of these technologies has a precise definition with regard to capture efficiency. In many cases terms are used interchangeably. Where control devices are in use, solvent laden air from several presses may be combined and ducted to a common control device.

c. Wide-web Flexographic Printing. Capture systems in use at flexographic printing facilities include combinations of dryer exhausts, floor sweeps, hoods, and permanent total enclosures. Many facilities, including most sheetfed corrugated box facilities have no capture systems and rely on pressroom exhaust to the atmosphere to dilute the small amount of HAP present in the ink.

2. Control Devices.

a. Carbon adsorbers. Adsorption systems are used to remove organic compounds from gas streams when strict limits on the outlet concentration must be met, or when recovery of the compound is desired. Adsorption is effective on inlet concentrations ranging from a few parts per billion to several thousand parts per million, and flow rates of several hundred to several hundred thousand cubic feet per minute. Carbon adsorbers typically have a removal efficiency of 95 to 99 percent.

Once the carbon reaches saturation, it can be regenerated with steam within the adsorber vessel. This allows for the recovery of the organic compounds for reuse.

b. Incinerators. Two basic types of incinerators, thermal and catalytic, are used by package and product rotogravure and flexographic printers to remove organic contaminants. Each type is discussed below.

(1) *Thermal incinerators.* Thermal incinerators can be generally used on air streams with a wide concentration range of organics. These control devices have minimal dependence on the characteristics of the organic contaminants, so they can be used to control a wide variety of emission streams. Thermal incinerators can achieve removal efficiencies of 98 percent and higher.

The basic operation of thermal incinerators involves raising the inlet air stream to the incineration temperature of the contaminants and maintaining the temperature for a specific residence time. The waste heat content of the incinerator exhaust stream is used to preheat the inlet air stream. An auxiliary fuel is then typically required to raise the air stream temperature to the incineration temperature.

(2) *Catalytic incinerators.* Catalytic incinerators are similar to thermal incinerators except that they use a catalyst (a substance that accelerates the rate of oxidation without undergoing a chemical change itself) to assist in the oxidation of organic compounds to carbon dioxide and water. The removal efficiency of catalytic incinerators can be as high as 98 percent. Catalytic incinerators typically operate at lower temperatures than thermal incinerators to achieve equivalent efficiencies. For this reason, auxiliary fuel requirements and operating costs are lower for catalytic incinerators than thermal incinerators when used to control relatively dilute air streams.

V. Rationale for the Proposed Rule

A. Regulatory Development Process for NESHAP

During development of a NESHAP, the EPA collects information about the industry, including information on emission source characteristics, control technologies, data from HAP emission tests at well-controlled facilities, and information on the cost, energy, and other environmental impacts of emission control techniques. The EPA uses this information in the development of possible regulatory approaches.

If the source category contains major sources, then a MACT standard is required. Section 112(d)(3) of the Act defines the minimum stringency requirements of the MACT standard for new and existing sources. This level of control is referred to as the MACT ''floor,'' which needs to be determined as a starting point for developing the regulatory alternatives.

Once the floor has been determined for new and existing sources for a category or subcategory, the Administrator must set MACT standards that are no less stringent than the floor level. Such standards must then be met by all sources within the category or subcategory. However, in establishing standards, the Administrator may distinguish among classes, types, and sizes of sources within a category or subcategory (section 112(d)(1) of the Act). Thus, for example, the Administrator could establish two classes of sources within a category or subcategory based on size and establish a different emission standard for each class as long as each standard is at least as stringent as the floor. The Act also contains provisions for regulating area sources. However, except for certain recordkeeping requirements contained in the General Provisions, these are not relevant to the proposed standards for printing and publishing sources, which apply only to major sources.

The next step in establishing a MACT standard is the development and analysis of regulatory alternatives. First, information about the industry is analyzed to develop model plant populations for projecting national impacts, including HAP emission reduction levels, costs, and energy and secondary environmental impacts. Several regulatory alternatives (which may be different levels of emission control, different applicability criteria, or both, and one of which is the MACT floor) are then evaluated to determine the most appropriate regulatory alternative to reflect the MACT level.

In addition, although NESHAP are normally structured in terms of numerical emission limits, alternative approaches are sometimes necessary. Section 112(h) of the Act provides that if it is not feasible to prescribe or enforce an emission standard, then a design, equipment, work practice, or operational standard may be established. For example, in some cases source testing may be impossible or at least not practicable due to technological and economic limitations.

In the EPA's decision-making process, the regulatory alternatives considered for new versus existing sources may be different and each alternative must be technically achievable. In selecting a regulatory alternative to represent MACT, the EPA considers the achievable reduction in HAP emissions (and possibly other pollutants that are co-controlled), the cost of control, and economic, energy, and other nonair quality health and environmental impacts. The overall objective is the achievement of the maximum degree of emission reduction without unreasonable economic or other impacts.

The selected regulatory alternative is then translated into a proposed regulation. The regulation implementing the MACT decision typically includes sections addressing applicability, standards, test methods and compliance

demonstration, monitoring, reporting, and recordkeeping. The preamble to the proposed regulation, published in the **Federal Register**, provides an explanation of the rationale for the decision. The public is invited to comment on the proposed regulation during the public comment period. Following an evaluation of these comments, the EPA reaches a decision and promulgates the final standards.

B. Determining Maximum Achievable Control Technology (MACT) ''Floors''

Once the EPA has identified the specific major source categories or subcategories that it intends to regulate under section 112, MACT standards are set at a level at least as stringent as the ''floor.'' Congress has provided directives to guide the EPA in the process of determining the regulatory floor.

Congress specified that the EPA must establish standards which require ''the maximum degree of reduction in emissions of the hazardous air pollutants * * * that the Administrator * * * determines is achievable * * *'' (section 112(d)(2) of the Act). In addition, Congress limited the Agency's discretion by defining the minimum baseline (floor) at which standards may be set, as follows:

(1) For new sources, the standards for a source category or subcategory ''shall not be less stringent than the emission control that is achieved in practice by the best controlled similar source, as determined by the Administrator,''; and

(2) For existing sources, the standards ''may be less stringent than standards for new sources * * * but shall not be less stringent, and may be more stringent than: (A) the average emission limitation achieved by the best performing 12 percent of the existing sources (for which the Administrator has emissions information) * * * or (B) the average emission limitation achieved by the best performing 5 sources * * * for categories or subcategories * * * with fewer than 30 sources'' (section 112(d)(3) of the Act).

C. Selection of Pollutants and Source Category(ies)

Section 112(b) of the Act lists the HAP to be regulated with standards established under section 112. Section 112(d), as amended, requires the EPA to promulgate emission standards for each category or subcategory of major sources and area sources of the HAP listed in section 112(b). For the purpose of developing these standards, the EPA may distinguish among classes, types, and sizes of sources within a category or subcategory. The NESHAP are to be developed to control HAP emissions from both new and existing sources pursuant to section 112(c) of the Act.

The initial source category list (57 FR 31576, July 16, 1992), required by section 112(c) of the Act, identifies source categories for which NESHAP are to be established. This list includes all major source categories of HAP known to the EPA at this time, and all area source categories for which a finding of adverse effects warranting regulation has been made.

The source category list identifies ''Printing/Publishing (Surface Coating)'' as a source category because it contains major sources which have the potential to emit at least 10 tons of any one HAP or at least 25 tons of any combination of HAP annually.

The printing and publishing industry encompasses printing by a variety of graphic arts techniques applied to a variety of substrates. Printing operations are included as one or more steps in the overall manufacturing process for a wide variety of end products. Packaging and product printing often makes up only a small part of the value of the end product. For purposes of this rule, the EPA has defined the source category as consisting of all facilities engaged in publication rotogravure and product and packaging rotogravure and wide-web flexographic printing.

D. Selection of Emission Points Covered by the Proposed Rule

The proposed rule would limit organic HAP emissions that result from publication rotogravure and product and packaging rotogravure and wide-web flexographic printing. The standard applies to HAP present in inks, ink extenders, solvents, coatings, varnishes, primers, adhesives, and other materials applied on publication rotogravure and product and packaging and wide-web flexographic presses. Emission points in the publication rotogravure segment of the printing and publishing industry include but are not limited to ink and solvent storage tanks, ink mixing, printing, press and parts cleaning, proof and production presses and solvent recovery. Within the product/package rotogravure and wide-web flexography industry the standard applies to inks and all other materials applied with rotogravure or wide-web flexographic printing presses.

A discussion of the rationale for including or excluding basic processes from this proposed rule is given below.

1. Operations for Which Standards Are Being Proposed

EPA is proposing organic HAP emission standards for rotogravure and wide-web flexographic printing operations. Within the publication rotogravure segment of the industry, all organic HAP emitting operations are covered by the standard. Current industry practices instituted for compliance with applicable regulations pertaining to VOC emissions include accounting for solvent use on a facility-wide or control system wide basis determined by a periodic liquid-liquid mass balance. Organic HAP emissions at points other than production printing presses are relatively minor compared to press emissions. These operations, including ink storage and mixing, parts cleaning and proof presses can be controlled or uncontrolled provided that the overall facility or control system meets the proposed standard. Based on information provided by all U.S. publication rotogravure facilities, there are readily available techniques to achieve substantial organic HAP emissions reduction from the presses. Adequate information is available to establish MACT for these facilities.

Within the product and packaging rotogravure and wide-web flexographic printing segment of the industry, emission of organic HAP from rotogravure and flexographic presses is covered.

Based on the information obtained from the industry in response to information collection requests, in addition to information provided voluntarily and during meetings with industry trade organizations, there are several readily available techniques (including carbon adsorption and thermal and catalytic incineration) to achieve substantial emission reductions in these operations. While inks and other materials containing organic HAP are being used at many facilities, alternative formulations containing no organic HAP, or very low concentrations of organic HAP are available for many specific applications. Adequate information exists for establishing MACT for capture and control devices and for alternate low-HAP formulations.

2. Excluded Operations

a. Inorganic HAP Emissions. Inorganic HAP are present in pigments and film forming components of some inks. These components make up less than 1 percent of the total HAP content of the materials. These components remain on the substrate for the life of the publication, product or package and are not expected to be emitted to the air.

b. Non-press Operations at Product and Packaging Rotogravure and Wide-web Flexographic Printing Facilities. Operations related to press and parts cleaning, proof presses, ink mixing and

storage, film lamination and flexographic platemaking have the potential to emit organic HAP. Organic HAP emissions from these operations make up only a small fraction of HAP emissions from the presses. Very few data are available regarding the extent of emissions from these sources and applicable control techniques. Adequate information is not available to establish MACT for these potential emission points.

EPA is not proposing regulations at this time pertaining to off-line rotogravure coating because these emission points will be covered in a future standard for ''Paper and Other Web Coating''.

c. Narrow-web Flexography. Thousands of narrow web flexographic printing facilities exist which primarily print tags and labels. No major sources of this type have been identified based on a search of the Toxic Release Inventory System, and it is unlikely that there are any such facilities. Very few data are available regarding the extent of emissions from these sources and applicable control techniques. Narrow web flexographic printing facilities are typically very small and predominantly use low HAP, low VOC inks. Adequate information is not available to establish MACT for these potential emission points.

E. Selection of the Basis for the Proposed Rule

Section 112 of the Act defines a major source as any stationary source or group of stationary sources located within a contiguous area and under common control that emits or has the potential to emit considering controls, 9.1 Mg/yr (10 tpy) or more of any one HAP or 22.7 Mg/yr (25 tpy) or more of any combination of HAP. The Act states that new major sources must achieve the maximum achievable control technology (MACT), which is the level of emission control already achieved in practice by the best controlled similar source. The Act further states that emission standards promulgated for existing sources may be less stringent than standards for new sources; however, standards for existing sources must not be less stringent than the average emission limitation achieved by the best performing 12 percent of the existing sources.

For all operations being covered by the proposed rule, the EPA has determined that, taking into account nonair quality health and environmental impacts, and energy impacts, MACT is equal to the MACT floors for both existing and new sources. In addition, MACT for new sources was found to be equal to MACT for existing sources. The EPA has determined that no further emission reductions can be achieved for new sources through the use of demonstrated technology than the level of reduction represented by MACT for existing sources.

To evaluate the regulatory alternatives, model plants were developed based on market segment (publication rotogravure, package and product rotogravure and wide-web flexography), and size. These characteristics were examined to determine whether any technological justification existed to differentiate the proposed standards by market segment or size. Based on this examination, the EPA has decided that different market segments operate in different ways and that there is justification to differentiate between the two market segments identified on the basis of these characteristics. No compelling reasons were identified as to why a facility of one size could not incorporate the technology used by a facility of another size.

1. Publication Rotogravure.

Data were obtained from all of the 27 U. S. publication rotogravure facilities. All of the control systems employ activated carbon based solvent recovery systems. All facilities calculate overall efficiencies on the basis of liquid-liquid mass balances. All facilities use toluene based ink systems, although some facilities have replaced a portion of the toluene with non-HAP organic solvents. Waterborne ink systems are not technically feasible at this time for the high quality, high speed printing which these facilities produce.

The average emissions limitation achieved by the best performing 5 facilities was 92 percent. This limitation is based on the level of control achieved in each of twelve monthly material balances at the 5 plants with the best annual solvent recovery rates. The solvent recovery data were analyzed on a plantwide basis. Some facilities operated more than one solvent recovery system and it was not possible to reliably isolate the individual systems. Annual average emission limitations were higher, and facilities meeting the standard each and every month will achieve annual emissions limitations of 92 percent or greater.

To achieve 92 percent solvent recovery each month, a facility may need a permanent total enclosure and an efficient solvent recovery system. No more efficient alternative technologies are available. Higher solvent recovery rates may not be achievable on a consistent basis due to month-to-month variations in solvent accounting and due to solvent retention in the printed substrate. Therefore the floor for new sources was determined to be the same as the floor for existing sources and no more stringent regulatory alternatives were found to exist.

2. Package and Product Rotogravure and Wide-web Flexography

Data were obtained from approximately 103 product and package rotogravure printing facilities, and approximately 500 wide-web flexographic facilities. Industry representatives believe that there are approximately 400 product and package rotogravure facilities operating in the U.S. There are approximately 800 wide-web flexographic printing facilities in the United States. Different types of incinerators and solvent recovery systems were operated by 146 of the reporting facilities. The balance of the facilities had no control device. In all cases where control devices were in operation, they were designed and operated to control VOC emissions. It is assumed that the performance of these control devices with respect to VOC and organic HAP is equivalent.

The same types of control devices and capture systems were generally applicable even though the materials applied, products, substrates, and web widths of the controlled presses varied considerably. The overall control efficiency data for the facilities with the greatest emissions limitations were generally provided based on tests conducted to comply with permit conditions. Where permanent total enclosures were in place, capture efficiencies of 100 percent were assumed and tests across control devices were conducted. The emissions limitation achieved by the average of the best controlled 12 percent of the facilities was 95 percent.

To achieve 95 percent control of organic HAP a facility may need to operate a permanent total enclosure and an efficient control device. At present there are no technologies which can consistently achieve a greater overall control efficiency than this. For this reason, the floor for new sources was determined to be equal to the floor for existing sources and no more stringent regulatory alternatives were found to exist.

F. Selection of the Format of the Proposed Rule

Emission standards for control of HAP have been prescribed in accordance with section 112(d) of the Act. Where control devices are in place, emissions standards are proposed on the basis of

overall efficiency, taking into account both capture and control device efficiencies.

To encourage the use of non-HAP materials in the publication rotogravure industry as an alternative to toluene (and ethylbenzene and xylene) based materials, an alternate means of compliance allows credit for 100 percent recovery of that portion of the solvent which is replaced with non-HAP compounds. Thus, a facility achieving 90 percent overall efficiency, using a solvent system which is 70 percent toluene and 30 percent non-HAP solvent would comply on the basis of an equivalent emissions limitation of 93 percent.

Based on the potential HAP content of the materials applied by the best controlled 12 percent of the product and package rotogravure and wide-web flexographic printing facilities, alternate standards were proposed yielding equivalent emissions limitations. Sources applying materials containing 0.20 kg organic HAP or less per kg of solids applied on package and product rotogravure and wide-web flexographic presses will not be required to operate a control device to comply with the standard. Facilities operating systems with overall efficiencies less than 95 percent would be able to comply by limiting the HAP content of the inks, coatings, primers, adhesives, solvents, and other materials applied such that the HAP emissions from the affected source are 0.20 kg per kg of solids applied or less.

Certain press lines are used to apply low solids materials which contain relatively low proportion of organic HAP relative to the mass of material applied. Sources applying materials containing 0.04 kg organic HAP per kg of material applied will not be required to operate a control device to comply with the standard.

G. Selection of Emission Test Methods and Monitoring Requirements

1. Emission Test Methods

In addition to the specific test methods described below for affected sources, the proposed rule adopts the provisions specified in 40 CFR 63.7.

a. Publication Rotogravure. Where a carbon adsorber is used, the EPA is proposing to use a mass balance procedure for determining the overall control efficiency. The proposed rule contains procedures as specified in 40 CFR 60.433 for using a mass balance approach that would calculate the amount of organic HAP and VOC applied and the amount recovered. This information would then be used to calculate the overall control efficiency of the carbon adsorber.

In determining compliance with the alternate standard for sources that have substituted non-HAP VOC for a portion of the HAP in their ink, the EPA is proposing that Method 24A be used for determining the volatile matter content. This is a long-standing method for such determinations. This determination may be conducted by the manufacturer and provided to the owner or operator. The EPA is proposing that the organic HAP content level be determined by proposed EPA Method 311. This method was proposed (see Solicitation of Comments) as part of the NESHAP for Wood Furniture Manufacturing Operations on December 6, 1994 (59 FR 62652). The EPA requests comment on the suitability of Method 311 for determination of HAP used in the printing industry.

b. Package and Product Rotogravure and Wide-web Flexography. If control devices (e.g., incinerators, carbon adsorbers) are used the proposed standards require them to achieve an overall control efficiency of at least 95 percent, or a HAP emission limitation of no more than 0.20 kg HAP per kg solids applied. It is necessary, therefore, to identify the capture efficiency of the capture system, the destruction or recovery efficiency of the control device, and, where feasible, operational parameters that would be monitored to ensure continuous compliance. The proposed standards also include provisions for determining the capture and removal efficiencies. The test methods and procedures being proposed for determining the capture and removal efficiencies are those that are typical for control devices.

The EPA is proposing that capture efficiency be determined by one of two methods depending on whether or not the capture system is a permanent total enclosure or not. A permanent total enclosure would be verified according to the provisions specified in 40 CFR 52.741, appendix B, Procedure T (and, thus would have a capture efficiency of 100 percent). The capture efficiency of all other systems would be determined according to the procedures specified in 40 CFR 52.741(a)(4)(iii).

The EPA is proposing that the removal efficiency of a control device be determined based on three runs, each run lasting one hour. Method 1 or 1A of 40 CFR part 60, appendix A, as appropriate, would be used for selection of the sampling sites, and the gas volumetric flow rate would be determined using Methods 2, 2A, 2C, or 2D of 40 CFR part 60, appendix A, as appropriate. Method 25 or 25A of 40 CFR part 60, appendix A, would then be used to measure either the organic concentration or the total organic HAP concentration before and after the control device. Alternatively, any other test method or data that has been validated according to the applicable procedures in Method 301 of 40 CFR part 63, appendix A, may be used.

Owners or operators complying with the standard on the basis of average HAP content of materials applied on the press would be required to determine the HAP content of each material applied. The EPA is proposing that the organic HAP content level be determined by proposed EPA Method 311. This method was proposed (see *Solicitation of Comments*) as part of the NESHAP for Wood Furniture Manufacturing Operations on December 6, 1994 (59 FR 62652).

2. Monitoring Requirements

In accordance with paragraph (a)(3) of section 114 of the Act, monitoring of stationary sources is required to determine the compliance status of the sources, and whether compliance is continuous or intermittent. Enhanced monitoring shall be capable of detecting deviations from each applicable emission limitations or standard with sufficient representativeness, accuracy, precision, reliability, frequency, and timeliness to determine if compliance is continuous during a reporting period. The monitoring in this regulation satisfies the requirements of enhanced monitoring.

For affected sources complying with the proposed standards through the use of control devices, initial compliance is determined through the initial compliance test, and ongoing compliance through continuous monitoring. The EPA has proposed the parameters to be monitored for certain types of control devices now used in the industry. The values of these parameters that correspond to compliance with the proposed standards are set by the owner or operator during the initial compliance test. If future monitoring indicates that control equipment is operating outside of the range of values established during the initial performance test, then the owner or operator is out of compliance with the proposed standards, except as specified for malfunctions in 40 CFR 63.6(e)(3).

Owners or operators using incinerators, and owners or operators using solvent recovery systems and demonstrating compliance with continuous emissions monitoring must identify the operating parameter to be monitored to ensure that the capture efficiency measured during the initial

compliance test is maintained, and conduct monitoring of this parameter in accordance with the plan submitted with the compliance status report. If future monitoring indicates that capture system is operating outside of the range of values established during the initial performance test, then the owner or operator is out of compliance with the proposed standards, except as specified for malfunctions in 40 CFR 63.6(e)(3).

a. Publication Rotogravure Sources Using Solvent Recovery Systems. Publication rotogravure facilities operating solvent recovery systems would be required to demonstrate continuing compliance by conducting a liquid-liquid mass balance each and every month.

b. Other Sources Complying by Means of a Control Device. Product and packaging rotogravure and wide-web flexographic sources complying by means of a solvent recovery system would be required to demonstrate continuing compliance either through the use of continuous emission monitors or by conducting a liquid-liquid mass balance each and every month.

Sources complying through the use of a thermal incinerator would be required to install, calibrate, operate and maintain a temperature monitoring device equipped with a continuous recorder to monitor the temperature in the combustion chamber downstream of the combustion zone. Sources complying through the use of a catalytic incinerator would be required to install, calibrate, operate and maintain a temperature monitoring device equipped with a continuous recorder to monitor the temperatures at the inlet to the catalyst bed and the outlet from the catalyst bed.

The rationale for selecting the control device parameters for thermal and catalytic incinerators in this proposed rule is long standing, and for more information see the proposal notice for the SOCMI reactor processes NSPS (55 FR 26966 through 26969, June 29, 1990). The EPA is, therefore, simply proposing to adopt the same monitoring parameters as have been required for previous standards.

H. Selection of Recordkeeping and Reporting Requirements

1. Recordkeeping

In addition to the specific recordkeeping requirements described below for each affected source, the proposed rule adopts the provisions specified in § 63.10 (a), (b), (c)(1), (c)(5–8), (c)(10–15), (d)(1–2), (d)(4–5), and (f). These were the only paragraphs from § 63.10 that were considered to be applicable to the proposed rule.

Each owner or operator would be required to maintain records of each applicability determination as described above in section II. A., each continuous monitoring system operated as described above in section V. G., and each liquid-liquid mass balance as described above in section V.

G. These Records Would Be Maintained in Accordance With the Requirements of § 63.10(b)

As called for by the General Provisions, each owner or operator of an affected source would be required to develop a start-up, shut-down, and malfunction plan, and keep it on record to be made available for inspection, upon request, by the Administrator for the life of the affected source or until the affected source is no longer subject to the provisions of the proposed rule.

If an owner or operator of a product or packaging rotogravure or wide-web flexographic source elects to comply on the basis of use of low HAP materials, or on the basis on HAP emission limitation, the EPA is proposing that records of the monthly mass-weighted average organic HAP content for all inks, coatings, primers, adhesives, solvents and other materials applied on the press be kept as well as all of the data and calculations used to calculate these values. This would include the mass and organic HAP content as applied of each material. This level of information is required for an inspector to determine whether the facility was in compliance and whether the proper data and calculations were being used.

If a thermal or catalytic incinerator is used, each owner or operator would be required to keep a record of the control device operating parameters being monitored. Since for some control devices compliance with the proposed standards is dependent on the control device being operated properly, these records are necessary to determine compliance. Specifically, a source would be out of compliance if the recorded parameters were out of range. Thus, the EPA is requiring these records for compliance determinations.

2. Reporting Requirements

In addition to the specific reporting requirements described below for each affected source, the proposed rule adopts the provisions specified in § 63.9(a) through § 63.9(e) and § 63.9(g) through § 63.9(j) and § 63.10 (a), (b), (d), and (f).

The proposed rule would require an owner or operator to submit the following five types of reports:

(1) Initial notification,
(2) notification of performance tests and continuous emission monitor evaluation periods,
(3) notification of compliance status,
(4) periodic reports, and
(5) other reports.

The purpose and contents of each of these reports are described in this section. The wording of the proposed rule requires all reports to be submitted to the ''Administrator.'' The term Administrator refers either to the Administrator of the EPA, an EPA regional office, a state agency, or another authority that has been delegated the authority to implement this rule. In most cases, reports will be sent to state agencies. Addresses are provided in the General Provisions of 40 CFR part 63, subpart A.

Records of reported information and other information necessary to document compliance with the regulation are required to be kept for 5 years. As required under the General Provisions, the two most recent years must be kept on-site; the other three years may be kept off-site. Records pertaining to the design and operation of the control and monitoring equipment must be kept for the life of the equipment.

a. Initial Notification. The proposed standards would require owners or operators who are subject to this subpart to submit an initial notification. As outlined in the General Provisions under § 63.9, this report serves two basic purposes: (1) Notifies the EPA that an existing facility is subject to the proposed standards and (2) notifies the EPA of the construction of a new facility. A respondent must also report any facility modifications as defined in § 63.5. This report will include the mass of HAP used at the facility during the previous twelve months, as well as the mass of HAP expected to be used at the facility during the next twelve months.

This report will establish an early dialogue between the source and the regulatory agency, allowing both to plan for compliance activities. The notice is due no later than 120 days after the effective date of the proposed standards. Under the proposed rule, the initial notification is not required from any source that has submitted a permit application under title V of the Act, provided that the permit application has been submitted by the same due dates as for the initial notification and that the state to which the permit application has been submitted has a permit program in place and has received delegation of authority from the EPA.

b. Notification of Performance Tests and Continuous Emission Monitor

Evaluation Periods. As adopted through the General Provisions, § 63.7 and § 63.9(g), owners or operators would be required to notify the Administrator in advance of conducting performance tests of control devices and evaluating continuous emissions monitors.

c. Notification of Compliance Status. As adopted through the General Provisions, owners or operators who are subject to this subpart would be required to submit a notification of compliance status. This report contains the information necessary to demonstrate that compliance has been achieved, such as the results of performance tests, and average organic HAP contents, as well as the methods that will be used for determining continuing compliance as outlined under § 63.9. Another type of information to be included in the notification of compliance status is the specific range of each monitored parameter for each affected source, the rationale for why this range indicates compliance with the emission standard, and whether each source has operated within its designated operating parameters. The report would be due within 60 days after the final compliance date as specified in the General Provisions.

d. Periodic Reports. The EPA is proposing to adopt a standard basis for submitting periodic reports for each of the operations for which standards are being proposed. Semiannual reports would be required whenever an operation was found to be in non-compliance or whenever a monitored parameter exceeded its value. For example, for a publication rotogravure source, a semiannual report would be triggered for any monthly period covered by the semiannual report in which the overall efficiency of the solvent recovery system failed to meet the standard.

Semiannual reports would also be required whenever a change occurred at a facility that might affect a source's compliance status or that introduces a new element to the operation that was required to be reported in the notification of compliance status. For example, conversion of a press requiring a control device to operate with low-HAP materials would require monthly averaging of materials applied to maintain compliance. This change in compliance status would trigger a semiannual report. For operations that did not experience any exceedances or changes, the EPA is proposing that annual reports be submitted to this effect.

The EPA is proposing to adopt the above schedule of reporting because it provides a fair balance between the need to know certain information in a timely fashion and reduces the burden to industry and provides consistency within this regulation. The following paragraphs discuss in more detail the specific types of information to be included in these various periodic reports. The information being requested is that which the EPA believes is necessary in the enforcement of the proposed rule.

(1) Sources Operating Solvent Recovery Systems. A semiannual report would be required whenever a monthly liquid-liquid mass balance failed to meet the standard. Owners or operators choosing to demonstrate compliance using CEM would be required to submit a semiannual report for any semiannual period in which the calculated average efficiency, including capture efficiency and control device efficiency failed to meet the standard during any three hour period.

(2) Sources Operating Thermal and Catalytic Incinerators. A semiannual report would be required for any semiannual period when a monitored temperature parameter, averaged over a three hour period, falls outside its appropriate range during any three hour period. A semiannual report would be required for any semiannual period when a monitored site-specific capture system parameter, averaged over a three hour period, falls outside its appropriate range during any three hour period.

(3) Package and Product Rotogravure and Flexographic Sources Complying by Means of Low-HAP Materials. A semiannual report would be required for any semiannual period in which the materials applied, when averaged over a monthly period, exceed the standard for organic HAP content based on solids applied or on materials applied during any month.

e. *Other Reports.* The only ''other reports'' in the proposed rule are those that are required under the General Provisions, subpart A of 40 CFR part 63. Of particular note is the report required in response to periods of startup, shutdown, and malfunction. When the procedures used during such periods are completely consistent with the plan, a report stating such is to be delivered or postmarked by the thirtieth (30th) day following the end of each calendar half. If the procedures are not completely consistent with the plan, an owner or operator is to report the actions taken within 2 working days after commencing actions inconsistent with the plan, followed by a letter within 7 working days after the end of the event.

I. Selection of Compliance Deadline

The proposed standards would require the owner or operator of an existing rotogravure or wide-web flexographic printing operation to comply with these standards within three years after they are promulgated in the **Federal Register**. Section 63.7(a)(2) of the General Provisions then allows a source 180 days after the compliance date to demonstrate compliance through an initial performance test. A shorter compliance time was not selected because the proposed timeframe is necessary for those sources that will be required to install new capture and/or control devices to purchase and install the equipment. The proposed timeframe will also provide the greatest opportunity for developing and adopting low HAP content materials. Administrative procedures are established in § 63.6(i) to implement compliance extensions for existing sources that are unable to install controls by the required compliance dates.

Owners or operators of new sources that commence construction after the standards are proposed but before the standards are promulgated will have to comply immediately upon startup, unless the promulgated regulation is more strict than the proposed regulation. In accordance with Section 112(i)(2) of the Act, if the promulgated standards are more stringent than the proposed standards, the compliance date for construction after proposal but before promulgation will be 3 years after the promulgation date, provided the owner or operator complies with the standards as proposed until the compliance date. The owner or operator would then be required to conduct a performance test within 120 days after the compliance date. All other new sources will have to comply with the proposed standards immediately upon startup.

J. Operating Permit Program

Under 40 CFR part 70, all major sources of HAP will be required to obtain an operating permit. Emission limits, monitoring, and reporting and recordkeeping requirements are typically scattered among numerous provisions of State implementation plans (SIP's) or Federal regulations. As discussed in the rule for the operating permit program, this new permit program would include in a single document all of the requirements that pertain to a single source. Once a state's permit program has been approved, each printing and publishing facility that is a major source within that state

must apply for and obtain an operating permit. If the state wherein the printing and publishing facility is located does not have an approved permitting program, the owner or operator of a printing and publishing facility must submit a part 71 permit application if requested under 40 CFR part 71.

K. Pollution Prevention Considerations

The Pollution Prevention Act of 1990 establishes the following management hierarchy as national policy:

1. Pollution should be prevented or reduced at the source whenever feasible;
2. Pollution that cannot be prevented should be recycled in an environmentally safe manner whenever feasible;
3. Pollution that cannot be prevented or recycled should be treated in an environmentally safe manner whenever feasible; and
4. Disposal or other release into the environment should be employed only as a last resort and should be conducted in an environmentally safe manner.

The Pollution Prevention Act considers ''source reduction'' a fundamental aspect of pollution prevention. Source reduction is any practice that reduces the amount of any hazardous substance entering the waste stream or otherwise released into the environment prior to recycling, energy recovery, treatment, or disposal. Practices such as recycling, energy recovery, treatment, and disposal are not considered pollution prevention measures under the Pollution Prevention Act.

The proposed rule provides strong incentives for pollution prevention. Within the publication rotogravure segment, substitution of non-HAP materials for organic HAP is encouraged by allowing sources to claim credit for recovery of 100 percent of non-HAP volatile matter (including water) used in the calculation of equivalent overall organic HAP control efficiency.

Within the product and package rotogravure and wide-web flexographic segments, use of non-HAP materials is encouraged by expressing the overall organic HAP limitation in terms of kg of organic HAP emitted per kg of solids applied. Use of low HAP materials decreases the required overall control efficiency. If materials averaging less than 0.20 kg organic HAP per kg solids applied are used, no control device is required. This provision makes the use of waterborne materials without control devices feasible for most applications.

L. Solicitation of Comments

The Administrator welcomes comments from interested persons on any aspect of the proposed standards, and on any statement in the preamble or the referenced supporting documents. In particular, the Administrator solicits comments on (1) The suitability of EPA Method 311 for determination of HAP in ink and other printing materials; (2) the mechanism by which owners or operators may accept case-by-case operating restrictions that would ensure that the potential to emit of their facility does not exceed the major source threshold; and (3) the effect of this regulation on effluent from industrial laundries.

The EPA Method 311 was proposed as part of the NESHAP for Wood Furniture Manufacturing Operations on December 6, 1994 (59 FR 62652). The comment period for the Wood Furniture NESHAP and Method 311 was scheduled to close on February 21, 1995. On February 22, 1995 (60 FR 35), the comment period for the proposed Wood Furniture NESHAP was extended to March 23, 1995 and the comment period for the proposed Method 311 was extended to April 24, 1995. Persons who submit comments on the suitability of Method 311 for determination of HAP in ink and other printing materials in response to the proposed Printing and Publishing Industry NESHAP should consider also submitting comments in response to the proposed Method 311. For information on the address and docket number for submitting comments on the proposed Method 311, see the February 22, 1995 **Federal Register** notice.

The proposed standards were developed on the basis of information available. The Administrator is specifically requesting factual information that may support either the approach taken in the proposed standards or an alternate approach. To receive proper consideration, documentation or data should be provided.

VI. Administrative Requirements

A. Public Hearing

A public hearing will be held, if requested, to discuss the proposed standards in accordance with section 307(d)(5) of the Act. Persons wishing to make an oral presentation on the proposed standards for printing and publishing should contact the EPA at the address given in the ADDRESSES section of this preamble. Oral presentations will be limited to 15 minutes each. Any member of the public may file a written statement before, during, or within 30 days after the hearing. Written statements should be addressed to the Air and Radiation Docket address given in the ADDRESSES section of this preamble, and should refer to Docket No. A–92–42.

A verbatim transcript of the hearing and any written statements will be available for public inspection and copying during normal working hours at the EPA's Air and Radiation Docket in Washington, D.C. (see **ADDRESSES** section of this preamble).

B. Docket

The docket is an organized and complete file of all the information submitted to or otherwise considered by the EPA in the development of this proposed rulemaking. The principal purposes of the docket are: (1) To allow interested parties to readily identify and locate documents so that they can intelligently and effectively participate in the rulemaking process; and (2) to serve as the record in case of judicial review (except for interagency review materials) (section 307(d)(7)(A) of the Act).

C. Executive Order 12866

Under Executive Order 12866, (58 FR 51735 (October 4, 1993)) the Agency must determine whether the regulatory action is ''significant'' and therefore subject to OMB review and the requirements of the Executive Order. The Order defines ''significant regulatory action'' as one that is likely to result in a rule that may:

(1) Have an annual effect on the economy of $100 million or more or adversely affect in a material way the economy, a sector of the economy, productivity, competition, jobs, the environment, public health or safety, or State, local, or tribal governments or communities;

(2) Create a serious inconsistency or otherwise interfere with an action taken or planned by another agency;

(3) Materially alter the budgetary impact of entitlements, grants, user fees, or loan programs or the rights and obligations of recipients thereof; or

(4) Raise novel legal or policy issues arising out of legal mandates, the President's priorities, or the principles set forth in the Executive Order.

Pursuant to the terms of the Executive Order, OMB has notified EPA that it considers this a ''significant regulatory action'' within the meaning of the Executive Order. EPA has submitted this action to OMB for review. Changes made in response to OMB suggestions or recommendations will be documented in the public record.

D. Enhancing the Intergovernmental Partnership under Executive Order 12875

In compliance with Executive Order 12875 we have involved state, local, and tribal governments in the development of this rule. State and local air pollution control associations participated in work group meetings and made comments which were incorporated in the proposed rule.

E. Paperwork Reduction Act

The information collection requirements in this proposed rule have been submitted for approval to OMB under the Paperwork Reduction Act, 44 U.S.C. 3501 et seq. An Information Collection Request (ICR) document has been prepared by the EPA (ICR No. 1739.01) and a copy may be obtained from Sandy Farmer, Information Policy Branch, EPA, 401 M Street SW., (2136), Washington, DC 20460 or by calling (202) 260–2740.

The public reporting burden for this collection of information is estimated to average 251 hours per respondent for the first year after the date of promulgation of the rule, including time for reviewing instructions, searching existing data sources, gathering and maintaining the data needed, and completing and reviewing the collection of information.

Send comments regarding the burden estimate or any other aspect of this collection of information, including suggestions for reducing this burden, to Chief, Information Policy Branch, 2136, U.S. Environmental Protection Agency, 401 M Street SW., Washington, DC 20460; and to the Office of Management and Budget, Washington, DC 20503, marked ''Attention: Desk Officer for the EPA.'' The final rule will respond to any OMB or public comments on the information collection requirements contained in this proposal.

F. Regulatory Flexibility Act

The Regulatory Flexibility Act (or RFA, Public Law 96–354, September 19, 1980) requires Federal agencies to give special consideration to the impact of regulation on small businesses. The RFA specifies that a final regulatory flexibility analysis must be prepared if a proposed regulation will have a significant economic impact on a substantial number of small entities. To determine whether a final RFA is required, a screening analysis, otherwise known as an initial RFA, is necessary.

Regulatory impacts are considered significant if:

(1) Annual compliance costs increase total costs of production by more than 5 percent, or

(2) Annual compliance costs as a percent of sales are at least 20 percent higher for small entities, or

(3) Capital cost of compliance represent a significant portion of capital available to small entities, or

(4) The requirements of the regulation are likely to result in closures of small entities.

A ''substantial number'' of small entities is generally considered to be more than 20 percent of the small entities in the affected industry.

In addition to the requirement above, the Agency requires a final RFA if any small business impacts are attributed to a regulatory action for any action initiated after April 1992. In this case, the regulatory action began before April 1992, so the former RFA requirements are pertinent.

Consistent with Small Business Administration (SBA) size standards, a firm is classified as a small entity if it has less than 500 employees for most of the affected industries at the 4-digit SIC code level, 750 for 3 affected industries at that level (2656—sanitary food containers, 2657—folding paperboard boxes, and 3221—glass containers), and 1,000 for 1 affected industry (3411—metal cans); and is unaffiliated with a larger entity.

Using the information above, none of the firms in the publication gravure sector are small. For the packaging and product gravure sector, 29 out of 60 firms, or 48.3 percent are classified as small. For the flexographic sector, virtually all of the affected firms are small.

Data were available to examine all four of the criteria.

For the first criterion, the maximum increase in the total cost of production from compliance with the standard is, on average, 1.4 percent for affected small entities. This is not a significant increase. For the second, annual compliance costs as a percentage of sales were calculated to be 9 percent higher for small entities, and this is not significant. For the third criterion, the increase in costs from compliance as a percentage of assets and as a percentage of equity was negligible (less than 1 percent). For the fourth and final criterion, no small firms are at risk of closure due to the standard.

In conclusion, and pursuant to section 605(b) of the Regulatory Flexibility Act, 5 U.S.C. 605(b), the Administrator certifies that this rule will not have a significant economic impact on a substantial number of small entities. The basis for the certification is that the economic impacts for small entities do not meet or exceed the criteria in the Guidelines to the Regulatory Flexibility Act of 1980, as shown above. Further information on the initial RFA is available in the background information document.

G. Clean Air Act Section 117

In accordance with section 117 of the Act, publication of this proposal was preceded by consultation with appropriate advisory committees, independent experts, and Federal departments and agencies. The Administrator welcomes comment on all aspects of the proposed regulation, including health, economic, technological, or other aspects.

H. Regulatory Review

In accordance with sections 112(d)(6) and 112(f)(2) of the Act, this regulation will be reviewed within 8 years from the date of promulgation. This review may include an assessment of such factors as evaluation of the residual health risk, any overlap with other programs, the existence of alternative methods, enforceability, improvements in emission control technology and health data, and the recordkeeping and reporting requirements.

VII. Statutory Authority

The statutory authority for this proposal is provided by sections 101, 112, 114, 116, and 301 of the Clean Air Act, as amended; 42 U.S.C., 7401, 7412, 7414, 7416, and 7601.

List of Subjects in 40 CFR Part 63

Environmental protection, Air pollution control, Hazardous substances, Reporting and recordkeeping requirements, Standard for printing and publishing industry.

Dated: March 1, 1995.

Carol M. Browner,

Administrator.

[FR Doc. 95–5983 Filed 3–13–95; 8:45 am]

BILLING CODE 6560–50–P

---

40 CFR Part 70

[AD-FRL–5172–5]

Clean Air Act Proposed Full/Interim Approval of Title V Operating Permits Program; Clark County Health District, Nevada

AGENCY: Environmental Protection Agency (EPA).

ACTION: Proposed rule.

SUMMARY: The EPA proposes interim approval of the Operating Permits Program submitted by Nevada's Clark County Health District. Alternatively, EPA proposes to grant full approval if specified changes are made. Clark

County's Operating Permit Program was submitted for the purpose of complying with Federal requirements which mandate that States develop, and submit to EPA, programs for issuing operating permits to all major stationary sources, and to certain other sources.

DATES: Comments on this proposed action must be received in writing by April 13, 1995.

ADDRESSES: Comments should be addressed to Ed Pike at the Region IX address below. Copies of the State's submittal and other supporting information used in developing the proposed rule are available for inspection during normal business hours at the following location: US EPA, 75 Hawthorne Street, San Francisco, CA 94105.

FOR FURTHER INFORMATION CONTACT: Ed Pike (telephone 415/744–1248), Mail Code A–5–2, US EPA, Region IX, Air & Toxics Division, 75 Hawthorne Street, San Francisco, CA 94105.

SUPPLEMENTARY INFORMATION:

I. Background and Purpose

A. Introduction

As required under title V of the Clean Air Act (''the Act'') as amended (1990), EPA has promulgated rules that define the minimum elements of an approvable State operating permits program and the corresponding standards and procedures by which EPA will approve, oversee, and withdraw approval of State operating permits programs (see 57 FR 32250 (July 21, 1992)). These rules are codified at 40 Code of Federal Regulations (CFR) Part 70. Title V requires States to develop, and submit to EPA, programs for issuing these operating permits to all major stationary sources and to certain other sources.

The Act requires that States develop and submit these programs to EPA by November 15, 1993, and that EPA act to approve or disapprove each program within one year after receiving the submittal. EPA's program review occurs pursuant to section 502 of the Act and the part 70 regulations, which together outline criteria for approval or disapproval.

Where a program substantially, but not fully, meets the requirements of Part 70, EPA may grant the program interim approval for a period of up to two years. If EPA has not fully approved a program by two years after the November 15, 1993 date, or by the end of an interim program, it must establish and implement a Federal program.

II. Proposed Action and Implications

A. Analysis of State Submission

The analysis in this notice focuses on the specific elements of Clark County's title V program that must be corrected to meet the minimum requirements of 40 CFR part 70. The full program submittal, the Technical Support Document, and other relevant materials are available for inspection as part of the public docket. The docket may be viewed during regular business hours at the address listed above.

1. Support Materials

The Clark County Health District (''District''), which is delegated authority to implement part 70 under state law (Nevada Revised Statues ''NRS'' section 445.546), submitted an administratively complete part 70 permitting program on January 20, 1994 with a letter requesting EPA's approval. The submittal contained regulations adopted by the District Board of Health on November 18, 1993. The District Counsel concurrently submitted an opinion that the Health District has sufficient authority to implement the program. The District adopted several rule modifications on May 26, 1994 and submitted these modifications on July 18, 1994.

The submittal contains a description of how the District will implement the program consistent with the Clean Air Act Amendments of 1990 (42 U.S.C. 7401–7671q) and 40 CFR part 70. The submittal also includes sample permits, permit applications, and reporting forms. EPA intends to develop an implementation agreement with the District by the time EPA takes final action on the program.

2. Title V Regulations and Program Implementation

The District adopted section nineteen and revised section zero of the Air Pollution Control Regulations to meet the requirements of part 70. The District also relies on sections two, four, five, six, seven, eight, nine, ten, and eighteen of its Air Pollution Control Regulations (''APCR'') to implement the permitting program consistent with part 70 requirements.

a. Applicability (40 CFR 70.2 and 70.3): The District will permit all major sources and all acid rain sources as required by part 70. The District will also permit non-major sources subject to New Source Performance Standards or National Emission Standards for Hazardous Air Pollutants. (APCR section 19.3)

b. Permit Content (40 CFR 70.6): Each part 70 permit must contain emission limitations and standards based on all applicable emission limitations as well as monitoring, recordkeeping, and other compliance terms sufficient to ensure compliance with all applicable requirements. Sources may request provisions for operational flexibility. (APCR sections 19.4 and 19.7)

c. Public Participation and EPA oversight (40 CFR 70.7): The public will be provided notice of and an opportunity to comment on each proposed part 70 source permit, permit renewal, and significant modification. Each part 70 permit, permit renewal, significant modification, and minor permit modification is subject to EPA oversight and veto. (APCR section 19.5)

d. Variances (40 CFR 70.11): Variances may not be granted from either applicable requirements or part 70 requirements. Therefore, the variance provisions of the rule will not affect the enforcement authority required under part 70. (May 26, 1994 amendment to APCR section 7)

e. Permit Modifications (40 CFR 70.7): Sources may apply for expedited permit changes for minor permit modifications. Significant modifications must undergo the full part 70 permit issuance procedures. Significant modifications include all title I modifications and all changes to case-by-case emissions limits such as New Source Review limits. (APCR section 19.5)

3. Permit Fee Demonstration

Clark County will collect permit and emissions-based fees that are projected at $289,000 ($33.16 per ton of pollutant subject to the presumptive minimum) by the end of the ramp-up period in 1995 and $387,000 in 1996. Fees will be adjusted annually by the Consumer Price Index beginning in 1997. The District's fees for the first four years of the program exceed, in the aggregate, the fees presumed sufficient to fund the program (40 CFR 70.9). Therefore, EPA believes that the County will collect sufficient fees to implement the part 70 permitting program.

4. Provisions Implementing the Requirements of Other Titles of the Act

a. Title III—The District has demonstrated in its title V program submittal broad legal authority to incorporate into permits and enforce all applicable requirements, including section 112 standards. The District also made a commitment to implement all section 112 requirements (July 18, 1994 program update). The EPA regards the program submittal and commitment as a demonstration that the District currently has statutory and regulatory authority to carry out all section 112 requirements

required by part 70 and an acknowledgment by the District that it is obligated to obtain any further regulatory authority needed to issue permits that assure compliance with section 112 applicable requirements.

EPA is interpreting the above legal authority and commitment to mean that the District is able to carry out all section 112 activities. For further discussion, please refer to the Technical Support Document and the April 13, 1993 guidance memorandum titled ''Title V Program Approval Criteria for Section 112 Activities,'' signed by John Seitz, Director of EPA's Office of Air Quality Planning and Standards.

b. Title IV—The District committed in its July 18, 1994 program update to obtain by January 1, 1995 the necessary regulatory authority to administer an acid rain program and to make regulatory revisions as necessary to accommodate federal revisions and additions. The District has drafted, but not officially adopted, the necessary regulations. EPA anticipates that these regulations will be adopted by the time EPA takes final action on this program.

B. Options for Approval/Disapproval and Implications

1. Changes Necessary for Full Approval

EPA is proposing to grant full approval under section 502 of the Act to the program if the changes listed below are made. If the District has not adopted regulations incorporating these provisions and submitted them to EPA as part of its operating permit program by the time EPA takes final rulemaking action, EPA will grant the District's program interim approval at that time. Please refer to the Technical Support Document, which is included in the docket, for additional details.

a. Enforcement Commitments. The District must submit documentation and commitments for implementing its enforcement and compliance tracking program. Part 70 requires that the District submit enforcement policies, including agreements with the EPA, and a description of the District's enforcement program, compliance tracking activities, and inspection strategies. (40 CFR 70.4(b)(4) and (5)) In addition, failure to act on violations of permits or other program requirements, failure to seek adequate penalties and fines and collect all assessed penalties and fines, and failure to inspect and monitor activities subject to regulation are grounds for withdrawing program approval. (40 CFR 70.10(c)(iii)) Therefore, the District must submit the descriptions and/or commitments required under sections 70.4(b)(4) and (5) to qualify for full approval and should ensure that the commitments meet the criteria in section 70.10(c)(iii).

b. Operational Flexibility Gatekeeper. The District's operational flexibility gatekeeper (APCR section 19.4.1.8) is not explicitly as broad as the section 70.4(b)(12) gatekeeper for section 502(b)(10) changes. Part 70 prohibits operational flexibility for ''modifications under any provision of title I of the Act.'' In contrast, the District prohibits these changes for any ''New Source Review modifications under any provision of title I of the Act,'' which does not expressly include modifications under sections 111 and 112. EPA expects that most section 111 or 112 modifications will be subject to the District's New Source Review program; however, in certain cases the section 111 or 112 modification definition will be more inclusive than the District's New Source Review rule. Therefore, revising the rule to explicitly prohibit section 502(b)(10) changes for all title I modifications is a requirement for full approval.

c. Confidential Business Information. The District Counsel's opinion does not document that the District's definition of confidential business information (''CBI''), which is not available to the public, is as narrow as EPA's. Section 19.3.1.3 states that ''emissions'' may not be considered confidential. EPA's regulation states that ''emissions data'' may not be considered confidential. (40 CFR 2.301) The District must adopt EPA's narrower definition of confidential information. Alternatively, the District Counsel must issue a statement that the District's program does not contain more restrictions on public access to information than the federal regulations.

d. Insignificant Activities. The District submitted criteria defining which units that are not subject to the part 70 permitting program. For criteria pollutants, the rule exemption threshold is based on potential emissions of either one or two tons per year. EPA believes these criteria pollutant thresholds are acceptable. The rule also exempts units with potential emissions of 200 pounds per year of hazardous air pollutants (HAPs). EPA believes that this threshold is acceptable except for very hazardous substances for which EPA has promulgated or proposed a lower title I modification threshold. To receive full approval, the District's exemption should be no less stringent than these thresholds. In addition, the program must require sources to identify permit exemptions on their applications. (40 CFR 70.5(c)).

e. Applicable Requirements and National Ambient Air Quality Standards (NAAQS). The District must add NAAQS, visibility, and increment requirements for temporary sources to the definition of applicable requirements (40 CFR 70.3). Sources that temporarily operate at multiple locations, such as non-metallic minerals processors or asphalt batch plants, may qualify for temporary source permits. The temporary source permits issued to these sources must require compliance with applicable requirements, as defined in part 70, at each location.

f. Early reductions permit deadline. The District must add a deadline of nine months or less for early reductions permits issued under section 112(i)(5) of the Act (40 CFR 70.4(b)(11)).

2. Interim Approval

The program substantially meets the requirements of part 70 as required under section 70.4. The EPA proposes to grant interim approval to the operating permits program submitted by the District on January 20, 1994 and updated on July 18, 1994 if the changes listed above are not made prior to the final action on the program. This interim approval would be changed to a full approval if the County subsequently makes the changes necessary for full approval. Permits issued under a program with interim approval have full standing with respect to part 70, and the one year time period for submittal of permit applications by subject sources begins upon interim approval, as does the three year time period for processing the initial permit applications.

3. Sanctions and Federal Program

If EPA were to finalize this proposed interim approval, it would extend for two years following the effective date of final interim approval, and could not be renewed. During the interim approval period, the District would be protected from sanctions, and EPA would not be obligated to promulgate, administer and enforce a Federal permits program in Clark County.

Following final interim approval, if the District failed to submit a complete corrective program for full approval by the date 6 months before expiration of the interim approval, EPA would start an 18-month clock for mandatory sanctions. If the District then failed to submit a corrective program that EPA found complete before the expiration of that 18-month period, EPA would be required to apply one of the sanctions in section 179(b) of the Act, which would remain in effect until EPA determined that the District had corrected the deficiency by submitting a

complete corrective program. Moreover, if the Administrator found a lack of good faith on the part of the District, both sanctions under section 179(b) would apply after the expiration of the 18-month period until the Administrator determined that the District had come into compliance. In any case, if, six months after application of the first sanction, the District still had not submitted a corrective program that EPA found complete, a second sanction would be required.

If, following final interim approval, EPA were to disapprove the District's complete corrective program, EPA would be required to apply one of the section 179(b) sanctions on the date 18 months after the effective date of the disapproval, unless prior to that date the District had submitted a revised program and EPA had determined that it corrected the deficiencies that prompted the disapproval. Moreover, if the Administrator found a lack of good faith on the part of the District, both sanctions under section 179(b) would apply after the expiration of the 18-month period until the Administrator determined that the District had come into compliance. In all cases, if, six months after EPA applied the first sanction, the District had not submitted a revised program that EPA had determined corrected the deficiencies that prompted disapproval, a second sanction would be required.

In addition, discretionary sanctions may be applied where warranted any time after the end of an interim approval period if the District has not timely submitted a complete corrective program or EPA has disapproved a submitted corrective program. Moreover, if EPA has not granted full approval to the District's program by the expiration of an interim approval and that expiration occurs after November 15, 1995, EPA must promulgate, administer and enforce a Federal permits program for the District upon interim approval expiration.

4. Approval of Preconstruction Program for Section 112(g) Case-by-Case MACT Determinations

Clark County will be required to implement the Maximum Achievable Control Technology requirements of section 112(g) of the Act as a component of the part 70 program. The EPA is proposing to approve the District's preconstruction permitting program, found in section 12 of the District rules, under the authority of title V and part 70 solely for the purpose of implementing section 112(g) during the transition period between the effective date of 112(g) and District adoption of a 112(g) rule. EPA has published an interpretive notice in the **Federal Register** that interprets section 112(g) to allow State and local agencies to delay implementing 112(g) of the Act until EPA promulgates a final 112(g) rule. Alternatively, State and local agencies may implement the requirements of 112(g) prior to EPA promulgation of the 112(g) rule as a matter of State or local law. 60 FR 8333 (February 14, 1995) The notice also states that EPA is considering whether to further delay the effective date of section 112(g) beyond the date of promulgation of the Federal rule so as to allow State and local agencies time to adopt rules implementing the Federal rule. EPA will provide for any such additional delay in the final section 112(g) rulemaking. Unless and until EPA provides for such an additional postponement of section 112(g), the District must be able to implement section 112(g) during the period between promulgation of the Federal section 112(g) rule and adoption of implementing District regulations and may choose to implement section 112(g) sooner as a matter of local law.

For this reason, EPA is proposing to approve the District's preconstruction review program as a mechanism to implement section 112(g) during the transition period between promulgation of the section 112(g) rule and District adoption of rules specifically designed to implement section 112(g). However, since approval is intended solely to confirm that State and local agencies have a mechanism to implement section 112(g) during the transition period, the approval itself will be without effect if EPA decides in the final section 112(g) rule that there will be no transition period. The EPA is proposing that twelve months will be adequate for the District to adopt implementing regulations but solicits comments on whether this timeframe will be adequate.

5. Approval of Program for Straight Delegation of Section 112 Standards Under the Authority of Section 112(l) of the Act

Requirements for approval, specified in 40 CFR 70.4(b), encompass section 112(l)(5) requirements for approval of a program for delegation of section 112 General Provisions subpart A and standards as promulgated by EPA as they apply to part 70 sources. Section 112(l)(5) requires that the District's program contain adequate authorities, adequate resources for implementation, and an expeditious compliance schedule, which are also requirements under part 70. Therefore, the EPA is also proposing to grant approval under section 112(l)(5) and 40 CFR 63.91 of the District's program for receiving delegation of section 112 standards that are unchanged from Federal standards as promulgated. This program for delegations only applies to sources covered by the part 70 program.

III. Administrative Requirements

A. Request for Public Comments

The EPA is requesting comments on all aspects of this proposed full/interim approval. Copies of the State's submittal and other information relied upon for the proposed interim approval are contained in a docket maintained at the EPA Regional Office. The docket is an organized and complete file of all the information submitted to, or otherwise considered by, EPA in the development of this proposed full/interim approval. The principal purposes of the docket are:

(1) to allow interested parties a means to identify and locate documents so that they can effectively participate in the approval/disapproval process, and

(2) to serve as the record in case of judicial review. The EPA will consider any comments received by April 13, 1995.

B. Executive Order 12866

The Office of Management and Budget has exempted this regulatory action from Executive Order 12866 review.

C. Regulatory Flexibility Act

The EPA's actions under section 502 of the Act do not create any new requirements, but simply address operating permits programs submitted to satisfy the requirements of 40 CFR Part 70. Because this action does not impose any new requirements, it does not have a significant impact on a substantial number of small entities.

List of Subjects in 40 CFR Part 70

Environmental Protection, Administrative practice and procedure, Air pollution control, Intergovernmental relations, Operating permits, Reporting and recordkeeping requirements.

Authority: 42 U.S.C. 7401, et seq.

Dated: February 25, 1995.

Felicia Marcus,

Regional Administrator.

[FR Doc. 95–6267 Filed 3–13–95; 8:45 am]

BILLING CODE 6560–50–P

FEDERAL COMMUNICATIONS COMMISSION

47 CFR Part 2

[ET Docket No. 95–18; DA 95–426]

Allocation of Spectrum at 2 GHz for Use by the Mobile-Satellite Service

AGENCY: Federal Communications Commission.

ACTION: Proposed rule; extension of time.

SUMMARY: By this order, the Chief, Office of Engineering and Technology, extends the deadline for filing comments in response to the Notice of Proposed Rule Making in this proceeding on allocation of spectrum at 2 GHz for use by the Mobile-Satellite Service. This Order grants the petition of the American Mobile Satellite Corporation for an extension of the deadline for comments. The petitioner and commenters argue that preparations under way for the 1995 World Radiocommunications Conference and meetings being held among members of the Mobile-Satellite Service, broadcasting, microwave and private radio communities will produce information pertinent to this proceeding, and request the extension in order to integrate this information into their comments. Although Commission policy not to routinely grant petitions for extension of time, we agree that this information will allow us to make better informed decisions, and that the requested extension is in the public interest. We therefore find good cause has been shown for extension of the comment period, and order that the comment deadline in this proceeding is extended form March 9, 1995, to May 5, 1995; and that the reply comment deadline is extended from March 27, 1995, to June 6, 1995.

DATES: Comments are due May 5, 1995. Reply comments are due June 6, 1995.

FOR FURTHER INFORMATION CONTACT: Sean White, Office of Engineering and Technology, (202) 776–1624.

SUPPLEMENTARY INFORMATION: In the matter of Amendment of Section 2.106 of the Commission's Rules to Allocate Spectrum at 2 GHz for Use by the Mobile-Satellite Service.

[ET Docket No. 95–18 RM–7927]

Order Granting Request to Defer Comment Dates

Adopted: March 3, 1995.
Released: March 8, 1995.

By the Office of Engineering and Technology.

1. On February 22, 1995, the American Mobile Satellite Corporation (AMSC) petitioned the Commission to extend the pleading cycle for comments to the Notice of Proposed Rule Making in the above-captioned proceeding, ET Docket No. 95–18, FCC 95–39, released January 31, 1995 (60 FR 11644, March 2, 1995). AMSC requests an extension for comments from March 9, 1995 to May 5, 1995; and for reply comments form March 27, 1995 to June 6, 1995.

2. AMSC, one of the original petitioners in this proceeding, observes that preparations for the 1995 Worldwide Radiocommunications Conference (WRC–95) are well under way, and that many of the entities likely to comment in this proceeding are part of the Industry Advisory Committee to the WRC–95 Conference Preparation Meeting (CPM), to be held March 22-April 5, 1995, in Geneva. The CPM will consider, *inter alia*, technical studies pertaining to sharing of the 2 GHz band between mobile-satellite and terrestrial users.[1] In supporting comments, COMSAT Corporation (COMSAT) states that meetings are currently ongoing between the mobile-satellite community and the broadcasting and microwave communities to evaluate the possibility of satellite-terrestrial sharing in this band and to consider issues relating to a possible relocation of current broadcast and microwave licensees in the band. COMSAT will use data developed in this process to conduct computer simulations of potential mutual interference between Mobile-Satellite Service (MSS) and terrestrial users.[2] AMSC and COMSAT also point out that the staffs of many entities likely to comment in this proceeding are intensely preparing for WRC–95 and other international meetings, including drafting reply comments to the Commission's Notice of Inquiry in preparation for WRC–95, IC Docket No. 94–31, FCC 95–36, 60 FR 8994, February 16, 1995[3] AMSC argues that extending the comment and reply comment periods will allow commenters to gather more information and take more time and care in preparing complete and precise comments, which will provide us with more complete information upon which to base our decisions in this proceeding. In addition to COMSAT, TRW Inc. and Motorola Satellite Communications, Inc. filed comments in support of AMSC's petition.[4] The National Association of Broadcasters has stated that it has no objection to extending the comment periods.[5]

3. Celsat, Inc. (Celsat), another petitioner in this proceeding, opposes AMSC's petition for extension of time. Celsat argues that most of the frequencies at issue in this proceeding were allocated for MSS use at the 1992 World Administrative Radio Conference, and it is therefore unnecessary to wait for WRC–95 or its preparatory meetings to make this allocation. Further, adds Celsat, the WRC–95 CPM will primarily involve technical, regulatory and procedural constraints associated with additional MSS allocations in the 1–3 GHz bands, and this allocation is not an issue at that meeting.[6] Celsat also contends that the meetings between the MSS community and broadcasting and microwave licensees are preliminary in nature, and provide no basis for delaying this proceeding.[7] Celsat argues that we have recognized that it is in the public interest to expeditiously implement and license MSS, and we should therefore not delay this proceeding.[8]

4. Although the Commission does not routinely grant extensions of time,[9] we agree with AMSC and supporting commenters that the public interest would be better served if we permit additional time for submitting comments in this proceeding. Not only would an extension provide additional time for gathering and evaluating data on MSS-terrestrial sharing in the proposed allocation, but meetings between the MSS community and the incumbents of the candidate band will be helpful in establishing a sharing and relocation regime acceptable to all affected parties. We find that comments informed by the results of WRC–95 preparations and industry consultation will allow the Commission to make better decisions than would be possible without this information. The two-month delay in this proceeding is justified by the quantity and quality of information we will have as a result. On balance, we find that the public interest would best be served by granting the

[1] See AMSC, Motion for Extension of Time, ET Docket No. 95–18 at 1–2 (February 22, 1995).

[2] See COMSAT, Comments on Motion for Extension of Time, ET Docket No. 95–18 at 1–2 (February 27, 1995).

[3] See AMSC Motion at 2, COMSAT Comments at 2.

[4] Letter from N. Leventhal, Leventhal, Senter & Lerman to W. Caton, Federal Communications Commission, February 27, 1995; Motorola, Comments in Support of Motion for Extension of Time (February 27, 1995).

[5] See National Association of Broadcasters *et al.*, No Opposition to Motion for Extension of Time, ET Docket No. 95–18 (February 28, 1995).

[6] See Celsat, Inc., Opposition to Motion for Extension of Time, ET Docket No. 95–18 at 3–4 (February 27, 1995).

[7] See *Id.* at 4.

[8] See *Id.* at 4–5.

[9] See 47 CFR 1.46(a).

extension. Accordingly, for good cause shown, *it is ordered* That the date for filing comments in this matter is extended to May 5, 1995, and the date for filing reply comments is extended to June 6, 1995.

5. This action is taken pursuant to authority found in Sections 4 (i), 302 and 303 of the Communications Act of 1934, as amended, 47 U.S.C. 154(i), 302, 303; and pursuant to Sections 0.31 and 1.46 of the Commission's Rules, 47 CFR 0.31, 1.46. For further information contact Sean White, Office of Engineering and Technology, (202) 776–1624.

Federal Communications Commission.

Bruce A. Franca,

Deputy Chief, Office of Engineering and Technology.

[FR Doc. 95–6215 Filed 3–13–95; 8:45 am]

BILLING CODE 6712–01–M

DEPARTMENT OF TRANSPORTATION

National Highway Traffic Safety Administration

49 CFR Part 571

[Docket No. 95–13, Notice 01]

RIN 2127–AF28

Federal Motor Vehicle Safety Standards; Glazing Materials

AGENCY: National Highway Traffic Safety Administration (NHTSA), Department of Transportation (DOT).

ACTION: Grant of petition for rulemaking; notice of proposed rulemaking (NPRM).

SUMMARY: NHTSA proposes to permit the installation of a new item of motor vehicle glazing, Item 4A—Rigid Plastic for Use in Side Windows Rearward of the ''C'' Pillar, in hatchbacks and station wagons. This NPRM responds to a petition for rulemaking from General Motors. In issuing this proposal, the agency seeks to provide greater flexibility for manufacturers to develop and use more aerodynamic, lighter weight glazing designs, resulting in lower fuel consumption.

DATES: Comments must be received on or before May 15, 1995.

ADDRESSES: All comments must refer to the docket number and notice number of this notice and be submitted, preferably in ten copies, to: Docket Section, Room 5109, National Highway Traffic Safety Administration, 400 Seventh Street, SW., Washington, DC 20590. Docket hours are from 9:30 am to 4 pm, Monday through Friday.

FOR FURTHER INFORMATION CONTACT: Ms. Margaret Gill, Office of Vehicle Safety Standards, National Highway Traffic Safety Administration, 400 Seventh Street, SW., Washington, DC 20590. Ms. Gill's telephone number is: (202) 366–6651.

SUPPLEMENTARY INFORMATION:

Background

Federal Motor Vehicle Safety Standard (FMVSS) No. 205, Glazing Materials (49 CFR 571.205), specifies performance requirements for the types of glazing that may be installed in motor vehicles. It also specifies the vehicle locations in which the various types of glazing may be installed. The standard incorporates, by reference, American National Standards Institute (ANS) Standard Z26.1, ''Safety Code for Safety Glazing Materials for Glazing Motor Vehicles Operating on Land Highways,'' as amended through 1980 (Z26). The requirements in ANS Z26.1 are specified in terms of performance tests that the various types or ''items'' of glazing must pass. There are 20 ''items'' of glazing for which requirements are currently specified in Standard No. 205.

To ensure the safety performance of vehicle glazing, Standard No. 205 includes a total of 31 specific tests. Each item of glazing is subjected to a selected group of these tests. It is the particular combination of tests that dictates the requisite properties of a particular item of glazing, and where in a motor vehicle the glazing may be installed.

Rigid plastic materials, such as those referenced in this rulemaking, are considered to be Items 4 and 5 glazing. Since they are more susceptible to abrasion than glass, these materials are currently not permitted to be installed in those areas requisite for driving visibility. All windows in a passenger car are considered requisite for driving visibility. Therefore, Items 4 and 5 glazing may not be used in those windows. Instead, they may be used for such things as internal partitions and covers for openings in the car roof. More extensive use is permitted in trucks (e.g., pickup trucks and cargo vans) since they do not have designated seating positions rearward of the driver's position. In those vehicles, Items 4 and 5 may be used in windows to the rear of the driver if other means for affording visibility are provided.

GM Petition

By letter dated December 15, 1993, General Motors (GM) petitioned the agency to amend Standard No. 205 to relax the limitations on the installation of Items 4 and 5 rigid plastic glazing so that they can be installed in the side windows of station wagons and hatchbacks to the rear of all designated seating positions. GM subsequently amended its petition, limiting it to Item 4 glazing. (Item 4 glazing is required to transmit at least 70 percent of the light striking it; Item 5 glazing has no such requirement.) GM suggested further that Item 4 glazing be used in only those station wagons and hatchbacks that provide means (e.g., exterior passenger-side mirrors) of affording visibility of the highway to the side and rear of the vehicle. The limitation of the installation to locations rearward of any designated seating position and to vehicles with exterior passenger side rearview mirrors was intended to address agency concerns that led to the denial of an earlier, somewhat similar petition by the American Automobile Manufacturers' Association (AAMA) (April 6, 1993; 58 FR 17787). AAMA's petition is discussed in detail later in this notice.

In support of its petition, GM stated that the potential benefits of permitting plastic glazing in side windows would be reduced mass and greater design flexibility. GM asserted that the weight of plastics used in automotive glazing is about half that of tempered glass of the same thickness. GM further asserted plastics, while retaining good optical quality, can be molded into more complex shapes than glass. GM concluded that the combined effect of the more aerodynamic designs possible with plastic glazing and the reduced weight will lower a vehicle's fuel consumption.

GM acknowledged that Tests 17, Abrasion Resistance (Plastics), and 18, Abrasion Resistance (Safety Glass), of ANS Z26 indicate that plastics are not as abrasion resistant as glass. However, GM suggested that concerns about the abrasion resistance of plastic glazing may not be well founded, asserting that some evidence shows that Tests 17 and 18 ''are not necessarily predictive'' of how glazing will perform under actual use conditions. In support of its assertion, GM attached a summary of a study performed by a plastics supplier on a 1988 GM Pontiac Fiero GT sail panel. The sail panel extends rearward from a position between the rearmost side window and the rear or back window. The panel was made of abrasion-resistant coated Plexiglas Resin. GM stated that in the study the haze of a six year old sail panel was measured and compared to the haze of a new replacement part. GM concluded that after six years, during which time the Fiero was driven over 41,000 miles, ''the haze increased from 0.49% to 0.87%, a difference of only 0.38%.''

GM further asserted that permitting rigid plastic in side windows would not affect visibility because it believed that some side windows are not used for visibility. GM analogized station wagon and hatchback side windows rearward of the ''C'' pillar to light truck windows rearward of the ''B'' pillar. GM argued that light truck windows rearward of the ''B'' pillar cannot be considered ''requisite for operation of the vehicle'' for the following reasons: Other means, typically outside rearview mirrors, are provided for affording visibility to the side and rear of the vehicle; Standard No. 205 does not require glazing be provided in these locations; and since light trucks are often used to carry cargo, rear side windows can be obscured by cargo.

GM argued similarly that station wagon and hatchback side windows rearward of the ''C'' pillar, adjacent to the vehicle's cargo area, provide no more than auxiliary visibility. Thus, GM argued station wagon side windows rearward of the ''C'' pillar should no longer be considered requisite for driving visibility if the driver is provided other means, such as outside rearview mirrors, of viewing the highway to the side and rear of the vehicle.

Comparison of GM and AAMA Petitions and Decision to Grant GM Petition

In considering whether to grant GM's petition, the agency reviewed its 1993 decision to deny the AAMA petition mentioned above. In its petition, the AAMA requested that Standard No. 205 be amended to permit the installation of an existing item of plastic glazing in fixed or hinged windows rearward of the ''B'' pillar. These windows are in areas requisite for driving visibility. Some of these windows were also next to designated seating positions. AAMA contended that coated plastic glazing resists abrasion well enough to be permitted in those locations and suggested hazing and weathering tests that would have had the effect of requiring that the rigid plastic glazing be coated. In denying AAMA's petition, NHTSA stated that permitting use of plastic glazing in areas requisite for driving visibility raised potential safety problems related to fracturing, abrasion resistance, strength, and head contact. Further, the agency noted that the petitioner did not provide any data addressing these safety concerns.

The agency's review of the two petitions revealed several significant differences which are described below.

Danger of head injuries from broken rigid plastic glazing. In denying the AAMA petition, NHTSA expressed concern that permitting rigid plastics behind the ''B'' pillar, (a location in which rigid plastics had never been permitted in passenger cars before) could result in occupants' heads contacting rigid plastic windows. NHTSA noted that tests indicated that the breaking of rigid plastic windows could leave sharp, pointed shards in the window frame. These shards could be easily contacted by an occupant's head in a crash. NHTSA also expressed concern about occupant injury resulting from large shards of rigid plastic glazing being propelled inward by vehicle impacts with trees, poles, or other vehicles.

In contrast, GM seeks permission to use plastic glazing in locations not adjacent to any outboard designated seating position. In those locations, the plastic glazing is unlikely to be adjacent to occupants. Limiting the use of plastic glazing in this manner would considerably reduce the chances of occupant head injury.

Abrasion resistance and strength tests. In denying the AAMA petition, NHTSA expressed concern that the rigid plastic glazing sought by AAMA would result in the use of glazing with greater susceptibility to reduced visibility and that would be weaker and thus have more dangerous fracture characteristics than the glazing currently permitted in areas requisite for driving visibility. In its petition, AAMA requested that the exterior side of rigid plastics be subjected to abrasion tests less stringent than Standard No. 205's present tests for materials permitted in areas requisite for driving visibility. AAMA also requested that rigid plastics be subjected to strength tests less stringent than Standard No. 205's present tests for materials permitted in those areas.

NHTSA believes that reasons for concern about strength would be significantly diminished if the suggestions in GM's petition were adopted in a final rule. Although the glazing sought by GM would not be subject to strength tests that are more stringent than the strength tests applicable to the AAMA glazing, the GM glazing would, as noted above, be used in different locations than the AAMA glazing. Unlike the AAMA glazing, the GM glazing would not be used adjacent to any seating position. Thus, the GM glazing would be much less likely to pose any risk to occupants in the event that it is broken in a crash.

Notice of Proposed Rulemaking

On March 11, 1994, NHTSA granted GM's petition for rulemaking. Pursuant to the granting of the petition, NHTSA issues this proposal. As explained below, NHTSA proposes to amend Standard No. 205 by permitting a new item of glazing, Item 4A. The most salient characteristic of the glazing would be an abrasion resistant outer coating. Item 4A glazing would be permitted in all areas where Item 4 glazing is permitted. In addition, the agency proposes to permit item 4A glazing to be installed in the side windows, rearward of the ''C'' pillar and forward of the ''D'' pillar, of station wagons and hatchbacks, if those windows are not laterally adjacent to an outboard designated seating position. NHTSA proposes these changes to Standard No. 205 to provide greater flexibility to manufacturers in selecting and shaping glazing. Use of the new glazing would permit more aerodynamic and lighter weight designs and, in turn, would enhance fuel economy.

NHTSA proposes to make Item 4A glazing subject to all the tests applicable to Item 4 glazing: tests nos. 2 (Luminous Transmittance); 10 (Dart Test); 13 (Ball Test); 16 (Weathering); 17 Abrasion Resistance (Plastics)(as modified); 19 Chemical Resistance (Nonstressed); 20 Chemical Resistance (Stressed); 21 Dimensional Stability (Warpage); and 24 Flammability.

Since Item 4A glazing is proposed for a location requisite for driving visibility, the agency proposes to supplement Test No. 17 Abrasion Resistance (Plastics). NHTSA tentatively concludes the additional requirements regarding abrasion are necessary because the agency does not concur with GM's suggestion that the rearmost side windows in station wagons and hatchback vehicles are not requisite for driving safety. That the views through station wagon or hatchback side windows on rare occasions may be obscured by cargo does not mean that rearmost side windows on these passenger cars are not ''requisite for driving visibility.'' Since the agency is proposing a more stringent abrasion test, it concluded that it was not necessary to propose the adoption of GM's suggestion that use of the rigid plastic glazing be limited to vehicles that provide means (e.g., exterior passenger-side mirrors) of affording visibility of the highway to the side and rear of the vehicle.

Test 17 specifies that after measuring the initial or pre-abrasion haze of three specimens of plastic glazing, those specimens are subjected to an abrader for 100 cycles. The initial haze is subtracted from the amount of haze measured after abrasion. The incremental haze caused by the abrasion must not exceed 15 percent.

NHTSA proposes that the interior side of Item 4A glazing be subjected to Test 17, as modified in Standard No. 205 for the interior side of glass-plastic glazing. As modified for that glazing, Test 17 does not regulate incremental haze. For that reason, it does not provide for measuring the initial haze and subtracting that haze from the post-abrasion haze. Instead, modified Test 17 regulates total haze. That haze must not exceed 4 percent.

As to the exterior side of Item 4A glazing, NHTSA proposes that it be subjected to Test 17, as modified for the interior side of glass-plastic glazing, except that the haze on the exterior side must not exceed 4.0 percent after 100 cycles and must not exceed 10.0 percent after 500 cycles. Specimens used for testing the exterior side of the glazing would not be used for testing the interior side.

The agency is proposing to regulate total haze and not just incremental haze because of its concern that the initial haze of the plastic glazing would not be as low as it is for glass. In the case of glass-plastic glazing and the Fiero panel cited by GM as an example of viable plastic glazing, the initial haze is very low. However, other plastic glazings may have sufficiently higher levels of initial haze that the amount of haze after abrasion would be unacceptably high for visibility purposes.

NHTSA bases the proposed haze limitation of 4.0 percent after 100 cycles for Item 4A on the final rule that established Item 14 *Glass-Plastics* glazing, permitted anywhere in a hardtop motor vehicle (See 48 FR 52061, November 16, 1983). Glass-plastic glazing consists of laminated glass to which a layer of soft plastic is bonded on the side facing the interior of the vehicle. In the final rule, NHTSA stated its belief that available test data (based in part on Economic Commission for Europe (ECE) Regulation 43) indicated that a 4 percent haze limitation for the plastic (interior) side of glass-plastic glazing is sufficient to minimize the loss of light transmittance and to provide adequate driving visibility. In the 11 year period since Item 14 glazing was permitted, NHTSA has received no reports that the 4 percent haze limitation level does not provide adequate driving visibility through the windshield. Thus, based on that experience, NHTSA believes that a limitation of 4 percent haze after 100 cycles would be appropriate for both the interior and the exterior sides of Item 4A glazing.

Since the 4 percent haze limitation may not ensure that Item 4A glazing has the hard, abrasion resistant coating used by GM to achieve good performance in its Fiero GT sail panel example, NHTSA believes it is also necessary to test at least the exterior side of fixed glazing for longer term resistance to abrasion. NHTSA therefore proposes to subject the exterior side of item 4A glazing test specimens to an additional 400 cycles of abrasion. Based in part on information from the AAMA, NHTSA proposes 10 percent as the maximum permissible haze after those additional cycles. This level of performance is thought to be indicative of hard coated products. GM submitted data on the performance of the coated glazing in the Fiero, but did not premise its request regarding plastic glazing upon the use of coated plastic glazing. Instead, it simply sought permission to use uncoated Item 4 glazing. The hard coating necessitated by the additional cycles of abrasion would ensure that Item 4A glazing would have the level of abrasion resistance demonstrated by the Fiero GT sail panel. No such assurance exists for Item 4 glazing. The value of hard coatings has been demonstrated in headlamp applications where plastic lenses have been allowed to replace glass lenses. The agency believes that coating technology should be equally suitable for glazing applications. Since windows to the rear of the C pillar do not roll down, coating only the exterior side should be sufficient.

Since NHTSA is proposing to permit a rigid plastic in a passenger car side window for the first time, the agency solicits comments on the sufficiency of the proposed provisions for supplementing Test 17. The agency also welcomes any comments on the advisability of permitting rigid plastics in station wagon side windows rearward of the ''C'' pillar and forward of the ''D'' pillar.

Rulemaking Analyses and Notices

1. Executive Order 12866 and DOT Regulatory Policies and Procedures

This proposed rule was not reviewed under Executive Order 12866 (Regulatory Planning and Review). NHTSA has analyzed the impact of this rulemaking action and determined that it is not ''significant'' within the meaning of the Department of Transportation's regulatory policies and procedures. If made final, this proposed rule would not have any ''significant'' impact on passenger car and motor vehicle glazing manufacturers. Installation of the new item of glazing would not be required. Instead, manufacturers would be provided with more flexibility in motor vehicle glazing because the new item of glazing would be permitted in station wagons and hatchbacks, rearward of the ''C'' pillar and forward of the ''D'' pillar. It is believed that use of this new item of glazing would make possible reduced weight and better aerodynamic design of vehicles resulting in the use of less fuel. However, the fuel savings would be slight. For these reasons, NHTSA believes that this proposal would not impose any additional costs and would not yield any significant savings. Thus, the impacts would be minimal and would not warrant preparation of a full regulatory evaluation.

2. Regulatory Flexibility Act

In accordance with the Regulatory Flexibility Act, NHTSA has evaluated the effects of this action on small entities. Based upon this evaluation, I certify that the proposed rule would not have a significant economic impact on a substantial number of small entities. This proposed rule, if made final, would not require the use of any particular type of glazing, but would provide manufacturers with more flexibility in the choice of glazing for station wagons and hatchbacks. Accordingly, this proposal would not impose any added costs on new motor vehicles.

3. Executive Order 12612 (Federalism)

This action has been analyzed in accordance with the principles and criteria contained in Executive Order 12612, and it has been determined that the proposed rule would not have sufficient Federalism implications to warrant preparation of a Federalism Assessment. No State laws would be affected.

4. National Environmental Policy Act

The agency has considered the environmental implications of this proposed rule in accordance with the National Environmental Policy Act of 1969 and determined that the proposed rule would not significantly affect the human environment.

5. Executive Order 12778 (Civil Justice Reform)

This final rule does not have any retroactive effect. Under 49 U.S.C. 30103, whenever a Federal motor vehicle safety standard is in effect, a State may not adopt or maintain a safety standard applicable to the same aspect of performance which is not identical to the Federal standard, except to the extent that the State requirement imposes a higher level of performance and applies only to vehicles procured for the State's use. 49 U.S.C. 30161 sets forth a procedure for judicial review of final rules establishing, amending or

revoking Federal motor vehicle safety standards. That section does not require submission of a petition for reconsideration or other administrative proceedings before parties may file suit in court.

Public Comments

Interested persons are invited to submit comments on the proposal. It is requested, but not required, that 10 copies be submitted.

All comments must not exceed 15 pages in length. (49 CFR § 553.21). Necessary attachments may be appended to these submissions without regard to the 15 page limit. This limitation is intended to encourage commenters to detail their primary arguments in a concise fashion.

If a commenter wishes to submit certain information under a claim of confidentiality, three copies of the complete submission, including purportedly confidential business information, should be submitted to the Chief Counsel, NHTSA, at the street address given above, and seven copies from which the purportedly confidential information has been deleted should be submitted to the Docket Section. A request for confidentiality should be accompanied by a cover letter setting forth the information specified in the agency's confidential business information regulation. 49 CFR part 512.

All comments received before the close of business on the comment closing date indicated above for the proposal will be considered, and will be available for examination in the docket at the above address both before and after that date. To the extent possible, comments filed after the comment closing date will also be considered. Comments received too late for consideration in regard to the final rule will be considered as suggestions for further rulemaking action. NHTSA will continue to file relevant information as it becomes available in the docket after the closing date, and it is recommended that interested persons continue to examine the docket for new material.

Those persons desiring to be notified upon receipt of their comments in the rules docket should enclose a self-addressed, stamped postcard in the envelope with their comments. Upon receiving the comments, the docket supervisor will return the postcard by mail.

List of Subjects in 49 CFR Part 571

Imports, Incorporation by reference, Motor vehicle safety, Motor vehicles, Rubber and rubber products, Tires.

In consideration of the foregoing, the agency proposes to amend, title 49 of the Code of Federal Regulations at part 571 as follows:

PART 571—[AMENDED]

1. The authority citation for part 571 would continue to read as follows:

Authority: 49 U.S.C. 322, 30111, 30115, 30117, and 30166; delegation of authority at 49 CFR 1.50.

§ 571.205 [Amended]

2. Section 571.205, would be amended by revising S5.1.2; revising the first sentence of paragraph (a) of S5.1.2.10, adding S5.1.2.11, and revising S6.1, to read as follows:

§ 571.205 Standard No. 205, glazing materials.

* * * * *

S5.1.2 In addition to the glazing materials specified in ANS Z26, materials conforming to S5.1.2.1, S5.1.2.2, S5.1.2.3, S5.1.2.4, S5.1.2.5, S5.1.2.6, S5.1.2.7, S5.1.2.8 and S5.1.2.11 may be used in the locations of motor vehicles specified in those sections.

* * * * *

S5.1.2.10 *Cleaning instructions.* (a) Each manufacturer of glazing materials designed to meet the requirements of S5.1.2.1, S5.1.2.2, S5.1.2.3, S5.1.2.4, S5.1.2.5, S5.1.2.6, S5.1.2.7, S5.1.2.8, or S5.1.2.11 shall affix a label, removable by hand without tools, to each item of glazing materials. * * *

* * * * *

S5.1.2.11 *Test Procedures for Item 4A—Rigid Plastic for Use in Side Windows Rearward of the ''C'' pillar.* (a) Glazing materials that comply with Tests Nos. 2, 10, 13, 16, 17, as that test is modified in S5.1.2.9(c) (on the interior side only), 17, as that test is modified in paragraph (b) of this section (on the exterior side only), 19, 20, 21, and 24 of ANS Z26.1, may be used in all areas in which item 4 safety glazing may be used. It may also be used in side windows located between the ''C'' pillars and ''D'' pillars in any station wagon and hatchback, unless the area between those pillars is laterally adjacent to an outboard designated seating position.

(b)(1) The specimens are subjected to abrasion for 100 cycles and then carefully wiped with dry lens paper (or its equivalent). The light scattered by the abraded track is measured in accordance with Test 17. The arithmetic mean of the percentages of light scattered by the three specimens as a result of abrasion shall not exceed 4.0 percent after being subjected to abrasion for 100 cycles.

(2) The specimen is remounted on the specimen holder so that it rotates substantially in a place and subjected to abrasion for an additional 400 cycles on the same track already abraded for 100 cycles. Specimens are carefully wiped after abrasion with dry lens paper (or its equivalent). The light scattered by the abraded track is then measured as specified in Test 17. The arithmetic mean of the percentages of light scattered by the three specimens as a result of abrasion shall not exceed 10.0 percent after being subjected to abrasion for 500 cycles.

* * * * *

S6.1 Each prime glazing material manufacturer, except as specified below, shall mark the glazing materials it manufactures in accordance with section 6 of ANS Z26. The materials specified in S5.1.2.1, S5.1.2.2, S5.1.2.3, S5.1.2.4, S5.1.2.5, S5.1.2.6, S5.1.2.7, S5.1.2.8, and S5.1.2.11 shall be identified by the marks ''AS 11C'', ''AS 12'', ''AS 13'', ''AS 14'', ''AS 15A'', ''AS 15B'', ''AS 16A'', ''AS 16B'', and ''AS 4A'', respectively. A prime glazing material manufacturer is one which fabricates, laminates, or tempers the glazing material.

Issued on: March 8, 1995.

Barry Felrice,

Associate Administrator for Rulemaking.

[FR Doc. 95–6231 Filed 3–13–95; 8:45 am]

BILLING CODE 4910–59–P

Notices

Federal Register

Vol. 60, No. 49

Tuesday, March 14, 1995

This section of the FEDERAL REGISTER contains documents other than rules or proposed rules that are applicable to the public. Notices of hearings and investigations, committee meetings, agency decisions and rulings, delegations of authority, filing of petitions and applications and agency statements of organization and functions are examples of documents appearing in this section.

ADMINISTRATIVE CONFERENCE OF THE UNITED STATES

Adoption of Recommendations

AGENCY: Administrative Conference of the United States.

ACTION: Notice.

SUMMARY: The Administrative Conference of the United States (ACUS) adopted two recommendations at its Fifty-First Plenary Session. The recommendations concern the application and modification of Exemption 8 of the Freedom of Information Act, and procedures governing debarment and suspension from federal programs.

FOR FURTHER INFORMATION CONTACT: Nancy G. Miller, 202–254–7020.

SUPPLEMENTARY INFORMATION: The Administrative Conference of the United States was established by the Administrative Conference Act, 5 U.S.C. 591–596. The Conference studies the efficiency, adequacy, and fairness of the administrative procedures used by federal agencies in carrying out administrative programs, and makes recommendations for improvements to the agencies, collectively or individually, and to the President, Congress, and the Judicial Conference of the United States (5 U.S.C. 594(1)). At its Fifty-First Plenary Session, held January 19, 1995, the Assembly of the Administrative Conference of the United States adopted two recommendations.

Recommendation 95–1, ''Application and Modification of Exemption 8 of the Freedom of Information Act,'' suggests some changes in the scope of coverage of that exemption. Exemption 8 protects from disclosure certain documents relating to examination and supervision of banks by federal agencies. The Recommendation proposes that Exemption 8 be retained for examination reports of open banks, and modified for examination reports for closed banks that have failed. Operating and condition reports should be disclosed insofar as they contain or are based on publicly available information. The Conference also makes several suggestions to bank regulatory agencies on their administration of Exemption 8.

Recommendation 95–2, ''Debarment and Suspension from Federal Programs,'' addresses issues relating to debarments and suspensions from federal procurement and nonprocurement programs. It recommends that debarment from procurement programs have the effect of debarment from nonprocurement programs, and vice versa. It recommends that independent factfinders preside over hearings on disputed material facts. It makes suggestions on improvements in the procedures governing debarments and suspensions, and it recommends that Congress refrain from legislating mandatory debarments.

The full texts of the recommendation are set out in the Appendix below. The recommendations will be transmitted to the affected agencies and to appropriate committees of the United States Congress. The Administrative Conference has advisory powers only, and the decision on whether to implement the recommendations must be made by the affected agencies or by Congress.

Recommendations and statements of the Administrative Conference are published in full text in the **Federal Register**. In past years Conference recommendations and statements of continuing interest were also published in full text in the Code of Federal Regulations (1 CFR Parts 305 and 310). Budget constraints have required a suspension of this practice in 1994. However, a complete listing of past recommendations and statements is published in the Code of Federal Regulations. Copies of all past Conference recommendations and statements, and the research reports on which they are based, may be obtained from the Office of the Chairman of the Administrative Conference. Requests for single copies of such documents will be filled without charge to the extent that supplies on hand permit (see 1 CFR 304.2).

The transcript of the Plenary Session is available for public inspection at the Conference's offices at Suite 500, 2120 L Street, NW, Washington, DC.

Dated: March 7, 1995.

Jeffrey S. Lubbers,

Research Director.

Appendix—Recommendations of the Administrative Conference of the United States

The following recommendations were adopted by the Assembly of the Administrative Conference on Thursday, January 19, 1995.

Recommendation 95–1, Application and Modification of Exemption 8 of The Freedom of Information Act

Background

The Freedom of Information Act (FOIA), 5 U.S.C. § 552, generally mandates public access to records in the possession or control of federal agencies, whether the records are generated by the agency or obtained by it from other sources. The Act contains nine exemptions, each of which authorizes but does not require the agency to protect from disclosure certain types of information. Exemption 8 permits agencies responsible for the regulation or supervision of financial institutions to protect from disclosure matters contained in or related to examination, operating, or condition reports prepared by, on behalf of, or for the use of the agency.

Exemption 8 provides an unusual level of protection to banks and bank regulatory agencies.[1] Except for Exemption 9, dealing with geological and geophysical information, no other FOIA exemption is industry- or agency-specific. In light of the change in the regulatory environment of financial institutions since the passage of the FOIA in 1966, the Conference has reviewed whether this broad exemption continues to be justified. The upheaval faced by financial institutions in the last decade and the number of such institutions that have failed makes availability of information relating to the regulation of that segment of the economy of particular interest. A substantial amount of taxpayer money has been spent to alleviate problems relating to financial institutions.

Exemption 8 covers a wide range of documents, primarily operating reports, condition reports, and examination reports of financial institutions. Operating and condition reports are largely public financial statements submitted by the bank to the agency, although they also may include some nonpublic information. Examination reports are the written statements prepared by the

[1] The use of the term ''bank'' herein is intended to refer to all financial institutions whose information is subject to Exemption 8. Likewise, the term ''bank regulatory agency'' refers to any agency responsible for the regulation or supervision of financial institutions.

agency's examiners evaluating the bank's operations and practices, but they are not audit reports. Examination reports include, among other things, information about an institution's portfolio of loans, the strength of its management, and areas that may need corrective action to improve its safety, soundness, and compliance with law. While bank regulatory agencies encourage examiners to make their reports candid, careful, and complete, the reports often include preliminary analysis and commentary. The examination report (known in some agencies as the ''open'' portion) is made available to the bank, on the condition that it not be disclosed outside the bank. The agencies retain the supporting information for the report (which in some agencies is known as the ''closed'' portion). Most agencies also include in the examination report and disclose to the bank what is known as a CAMEL rating: a composite summary in numerical form of key components of the examination—Capital, Asset quality, Management, Earnings, and Liquidity. There are also ratings for each factor in the closed portion.

Justification for Scope of Exemption 8

The Administrative Conference has always endorsed the FOIA concept of disclosure of government records[2] while recognizing the need to balance competing concerns.[3] Thus, it concludes that, while the basic protection of confidential and sensitive data relating to open banks should continue, where documents or information in agencies' possession are already public or relate to an institution no longer operating, the public interest in disclosure outweighs the potential harm from such disclosure.

Exemption 8's protection of operating, condition and examination reports is generally seen as serving three primary purposes: (1) It protects banks—including both the examined bank and those that have relationships with it—from substantial harm that might be caused by disclosure of information and opinion about their condition; (2) It facilitates the free exchange of information between bank personnel and examiners and encourages bank examiners to be candid, and as necessary, immediately responsive, in their assessments of a bank's financial position and operation; and (3) It protects the privacy of bank customers (e.g., depositors and borrowers).

Bank regulators and the institutions they regulate and/or supervise have generally asserted the need to protect both the candor of examination reports and the nonadversarial nature of the relationship between examiners and financial institution officials. In particular, they have expressed concern that disclosure of sensitive adverse information—especially preliminary data, information, and conclusions—could reduce the candor of the examiners' comments and analysis, and inhibit bank officials from offering open access to their records and from being frank and open in their discussions with the examiners. Examination reports, they point out, are intended to draw the attention of bank management to actual and potential problems as quickly as possible.

The exemption is also aimed at protecting the stability of financial institutions by preventing the inappropriate disclosure of information relating to the soundness of the institution, as reflected in examination reports and in operating and condition reports. The expressed concern is to avoid ''runs on the bank,'' as well as other adverse impacts—e.g., short-term liquidity problems, volatility in cost of funds, reduced access to credit or to depositors. Nondisclosure is further justified on grounds that harmful overreactions based on incomplete data are likely to outweigh any public benefits. Financial institutions are also by their nature interrelated, in the sense that an adverse impact on one may have broad and possibly severe adverse implications for others. Moreover, the need for disclosure is diminished insofar as the public already receives, as a result of various banking and securities law requirements, a substantial amount of detailed, comparable information about banks.

Finally, there is a critical interest in protecting the privacy of those doing business with a financial institution. Examiners evaluate samples of loans. Information that might permit identification of the borrowers and other customers, as well as information about their financial situation and soundness, may appear in examination reports. There seems little doubt that information that might identify customers generally should be exempt from disclosure.[4]

Proper Scope of Exemption 8

Because of these considerations, the Conference believes that Exemption 8's provisions should be retained for ''matters that are contained in or related to examination * * * reports'' pertaining to open banks. The continued protection of examination reports of open institutions seems appropriate under the current regulatory regime.

Congress should, however, limit the exemption's coverage with respect to information in operating and condition reports that is publicly available. Almost all of the information contained in operating and condition reports (i.e., quarterly statements of income and expenses, assets and liabilities) is currently in the public domain. As a result, bank regulatory agencies generally do release such information even though it may literally fit within Exemption 8. There is, therefore, no reason to retain this portion of the exemption insofar as it permits nondisclosure of publicly available data.

The more difficult question is whether the protection of other information covered by Exemption 8 continues to be warranted. Although the Conference concludes that examination reports with respect to open institutions should remain protected, it believes that examination reports (including all CAMEL ratings) of closed institutions that have failed should not be exempt from disclosure. (Closed institutions that did not fail would be treated like open institutions for this purpose.[5])

The deposit insurance program gives the public (and the taxpayers) a particular interest in knowing what caused a bank to fail and whether regulatory oversight was adequate or effective.[6] Release of examination report information is unlikely to cause any harm to the institution itself once it is closed; nor is there any ongoing relationship between the examiner and the bank officials that would be jeopardized by disclosure. The examiners' concern about protecting candor is sharply reduced for banks that are closed.[7] Further, the disclosure of such information pertaining to closed banks would, of course, continue to be subject to other FOIA exemptions.[8]

Nonetheless, to further ensure that disclosure will not cause undue harm, the Conference recommends that certain limitations be placed on disclosure of examination reports of closed banks that have failed. Disclosure concerning a failed bank that could reasonably be expected to impair the solvency of an open bank or efforts to sell the failed institution or its assets should be delayed. Similarly, disclosure should be delayed where it could reasonably be expected to interfere with an ongoing civil or criminal investigation. Information relating to specific loans or other information that would identify customers could be redacted. Moreover, in cases where either the Federal Deposit Insurance Corporation or the Resolution Trust Corporation is involved in responding to the bank's failure, other bank regulatory agencies should consult with them before releasing examination reports.

Separately, the Conference also proposes that Congress consider whether Exemption 8

[2] See ACUS Recommendation 71–2, ''Principles and Guidelines for Implementation of the Freedom of Information Act.'' See also Presidential Memorandum for Heads of Departments and Agencies, The Freedom of Information Act (Oct. 4, 1993) (Policy statement on the use of the FOIA encouraging agencies to disclose agency records in the absence of any clear harm); Attorney General's Memorandum for Heads of Departments and Agencies, The Freedom of Information Act (Oct. 4, 1993).

[3] See ACUS Recommendation 82–1, ''Exemption (b)(4) of the Freedom of Information Act,'' Recommendation 83–4, ''The Use of the Freedom of Information Act for Discovery Purposes.''

[4] Protection of a customer's privacy interest may require redaction of more than a customer's name; other characteristics of the loan might reveal customer identifications.

[5] The Conference does not seek to define when a closed bank would be deemed to have failed. As discussed below, among the bases for recommending that information about closed failed banks be available under FOIA are the role of government oversight and impacts on taxpayers.

[6] While Congress has mandated reports by the agency's Inspector General for certain bank failures after July 1, 1993 (see Federal Deposit Insurance Corporation Improvement Act of 1991, 12 U.S.C.§ 1831o(k)), disclosure of the underlying data, if requested, may provide a useful validation or check on such reports.

[7] Despite recent history, the vast majority of all financial institutions do not fail. This recommendation, therefore, addresses only the disclosure on request of examination reports of a narrow group of banks where the justification for release of the data is especially compelling.

[8] Among the potentially relevant exemptions are Exemptions 4 (confidential commercial or financial information), 5 (agency predecisional documents), 6 (personal privacy), and 7 (investigative reports).

should continue to apply to situations where examination or other reports of financial institutions are prepared by agencies having no authority to regulate or otherwise supervise those institutions.[9] Especially where the financial institutions do not accept deposits from the public and there is no applicable deposit insurance, Congress should review whether the policies underlying the Exemption apply.

If Congress believes that additional information relating to financial institutions would improve accountability and oversight or provide for a better-informed marketplace, the Conference recommends that Congress consider using the approach taken in the Community Reinvestment Act, where specific, focused, published reports have been required.[10]

Administration of Exemption 8

There are a number of actions bank regulatory agencies can take under their current authority to improve implementation of Exemption 8. Several bank regulatory agencies have already implemented many of them, and the Conference recommends their consideration by all. As a first step, agencies that regulate or supervise financial institutions should ensure that information that is otherwise publicly available is not treated as exempt under the FOIA. For example, as noted, operating and condition reports contain information that appears largely to be publicly available from other sources. To the extent that this and other information currently withheld under Exemption 8 is otherwise available and can be separated from sensitive data, agencies should release such information. Agencies should also continue to review their data collection forms and information-gathering documents and design them so that confidential information is collected separately and can be easily segregated from information that could be disclosed.

Several bank regulatory agencies now participate in an interagency FOIA group. The Conference lauds this effort, and encourages all bank regulatory agencies to coordinate their application of the exemption and its scope, in order to ensure that similar documents are treated similarly. In doing so, agencies should keep in mind the FOIA's intent to allow the public to know what agencies are doing to the greatest extent possible. Agencies generally should presume, for example, that if one agency releases a particular type of document, such documents should be released by all other agencies if requested. Agencies also should avoid routinely exempting documents that are ''related to'' examination reports without carefully evaluating whether the information could be disclosed. Even though an examination report itself may be nondisclosable, not all portions of all documents related to it are necessarily also nondisclosable.

Bank regulatory agencies should also consider using the ombudsmen recently mandated by statute[11] to inquire into citizen concerns about handling FOIA requests and to recommend solutions or possible systemic improvements. The Conference has previously stated that use of alternative means of dispute resolution should be explored in resolving FOIA disputes[12]

Agencies generally have the discretion to release requested information even if it is otherwise exempt under the FOIA. Pending Congressional action on the recommendations to modify Exemption 8, the bank regulatory agencies should implement the recommendations independently and, in any case, they should experiment with the release of examination reports for large failed banks. This would provide information to the public about the banks for which the largest amounts of money (and potentially, public funds) are at stake, and would provide an opportunity for determining whether such release has any significant untoward effects.

Recommendation

I. As applied to open financial institutions and closed financial institutions that have not failed, the provisions of Exemption 8 of the Freedom of Information Act should be retained for ''matters that are contained in or related to examination * * * reports.'' The Conference concludes that bank regulatory agencies should continue to have discretion to withhold such examination reports, because, among other reasons, (a) disclosure of material relating to supervision and regulation of open financial institutions might have an adverse impact on the supervisory and regulatory process and on the banks themselves,[13] (b) such disclosure also might have an adverse economic impact on other banks, due to the unique interrelationship of such institutions, and (c) a substantial amount of related information is already otherwise available.

II. A. In order to ensure that information about banks is not unreasonably withheld, Congress should limit the exception to disclosure in Exemption 8 as follows:

1. As applied to closed institutions that have failed, examination reports and CAMEL ratings should not be exempt from disclosure, except that disclosure should be delayed where it could reasonably be expected to (a) impair the solvency of an open bank or an agency's efforts to sell the closed bank or its assets, or (b) interfere with an ongoing civil or criminal investigation. Records identifying specific loans or customers could be redacted,[14] and prior consultation with other agencies with jurisdiction over such a closed bank should be required.

2. As applied to all financial institutions, operating and condition reports should not be exempt from disclosure insofar as they contain or are based on publicly-available information.

B. Congress should also consider whether Exemption 8 should continue to apply to examination or other reports of financial institutions prepared by agencies having no authority to regulate or otherwise supervise those institutions, especially where the financial institutions do not accept deposits from the public.

III. To the extent that Congress determines that additional information relating to the regulation or examination of financial institutions should be publicly available to enhance accountability and oversight, it should provide for preparation of special public reports and analyses, or for other mechanisms specifically designed to provide the necessary information to the public on a systematic basis.[15]

IV. Agencies with supervisory or regulatory responsibilities relating to financial institutions should continue to review ways to improve their administration of the Freedom of Information Act.

A. Bank regulatory agencies should implement the following practices:

1. Information subject to Exemption 8 should be withheld only insofar as necessary to protect the efficacy of the examination process and the privacy of sensitive data and to avoid adverse economic impacts on other banks. Agencies should not withhold information on the basis that it is ''related to'' operating, condition or examination reports unless they determine that nondisclosure is properly justified.

2. Information that is already publicly available should not be treated as exempt from disclosure. For example, agencies should continue, in response to FOIA requests, to release operating and condition information submitted by financial institutions that is publicly available.

3. To facilitate the disclosure of releasable information, agencies should, to the extent feasible, design data-collection forms or other information-gathering mechanisms in order to separate disclosable and nondisclosable information.

4. Agencies authorized to rely on Exemption 8 should continue to develop a coordinated approach for releasing

[9] See, e.g., Public Citizen v. Farm Credit Administration, 938 F.2d 290 (D.C. Cir. 1991) (Reports of FCA regarding the National Consumer Co-op Bank covered by Exemption 8).

[10] The Community Reinvestment Act, 12 U.S.C. § 2906, requires reports concerning credit made available by banks in low and moderate income areas. See also the Federal Deposit Insurance Corporation Improvement Act of 1991, which requires reports by the agency's Inspector General for each bank failure after July 1, 1993.

[11] The Office of the Comptroller of the Currency has an ombudsman, whose current responsibilities include involvement in banks' challenges to their CAMEL ratings. Recently enacted Pub. L. No. 103–325 requires each federal banking agency to appoint an ombudsman to deal with complaints from the public about regulatory activities.

[12] Administrative Conference Statement 12, 1 CFR 310.12 (1993). It has also recommended the use of ombudsmen more generally in federal agencies. Administrative Conference Recommendation 90–2, ''The Ombudsman in Federal Agencies,'' 1 CFR 305.90–2 (1993).

[13] The use of the term ''bank'' herein is intended to refer to all financial institutions whose information is subject to Exemption 8. Likewise, the term ''bank regulatory agency'' refers to any agency responsible for the regulation or supervision of financial institutions.

[14] This recommendation does not seek to alter the applicability of other FOIA exemptions or of notice requirements such as those set out in Executive Order 12600 (relating to predisclosure notification for confidential commercial information).

[15] For an illustration of such a report, see the Community Reinvestment Act, 12 U.S.C. § 2906 (reporting on supply of credit by banks in low and moderate income areas).

information, so that the public receives uniform treatment for similar data or types of documents.

5. Agencies should consider using their ombudsmen to inquire into citizen concerns about handling of FOIA requests and to recommend solutions or possible systemic improvements.[16]

B. In light of their discretion to release even otherwise exempt information in response to requests under the FOIA, bank regulatory agencies should implement the recommendations set forth in Part II(A). In any case, agencies should, on an experimental basis, immediately make the disclosures recommended therein with respect to large failed financial institutions.

Recommendation 95–2, Debarment and Suspension from Federal Programs

Introduction

The federal government is very big business in its purchases of products and services and in its provision of grants, loans, subsidies, and other types of economic assistance. Many private companies—small, medium, and large—rely to a significant degree on their business with the government for economic survival. In this recommendation, the Administrative Conference of the United States addresses several significant issues that arise when federal agencies act to protect the public fisc by suspending or debarring individuals and companies who allegedly are not responsible enough to continue to do business with the government.

The Administrative Conference of the United States has considered the topic of debarment and suspension from federal programs several times in the last 35 years. The 1961–62 temporary Administrative Conference issued a series of influential recommendations on the procedural structure of debarment and suspension of federal contractors. A 1975 study done for the Conference found that those recommendations remained sound. Since then, there has been substantial activity in the debarment and suspension area, as the Federal Acquisition Regulation (FAR) and other regulatory programs have been promulgated to authorize such actions both in the procurement and nonprocurement arenas, and Congress has authorized debarment and suspensions in a variety of contexts.

The Conference's recent study focused on the regulatory programs involving procurement debarment coordinated by the Federal Acquisition Regulation Council (FAR Council)[1] and promulgated in the FAR,[2] and a comparable (but not identical) effort involving nonprocurement debarment coordinated separately by OMB (known as the ''Common Rule'').[3] The two debarment and suspension programs have similar structures, but they are not identical, and not completely complementary.

Debarment refers to an action to preclude individuals and entities from receiving future contracts or other benefits such as loans or grants for a designated period of time. A suspension is a similar action on a temporary basis. They are intended to ensure that government ''does business,'' in both its contracts and its nonprocurement assistance programs, only with individuals and entities that are ''presently responsible.''

The Department of Defense alone debarred or suspended 1,157 persons and businesses in 1994. Across the federal government, almost 6,000 entities were debarred or suspended the same year.

A. Procurement

The regulations set forth in the FAR provide that each agency should promulgate its own regulations consistent with the FAR provisions. The FAR provides that an agency may suspend a contractor on an immediate, temporary basis prior to a hearing, based on ''adequate evidence'' of a variety of actions relating to a lack of contractor integrity. A proposed debarment, for which there is no minimum evidentiary threshold set out in the FAR, also has the effect of immediately precluding the award of additional federal contracts. Contractors have the opportunity to present information and argument in opposition to a suspension or proposed debarment. In cases where there is a disputed issue of material fact, a contractor is entitled to an informal factfinding hearing where the contractor may appear with counsel, submit documentary evidence, and present and confront witnesses. The regulations do not specify the type of hearing officer. The regulations do contain a list of mitigating factors the debarring official (who is usually also the suspending official) should consider in deciding whether to debar or suspend. Most debarments involve contractors that have been indicted or convicted; relatively few involve disputed issues of material fact that would warrant a hearing.[4]

Contractor suspensions and debarments have government-wide effect; i.e., no executive branch agency may enter into a contract with a debarred or suspended contractor. The General Services Administration administers a list of debarred and suspended contractors.

B. Nonprocurement

The nonprocurement debarment and suspension process is based on Executive Order 12549, issued in 1986. OMB led an effort for uniform regulations (the Common Rule), and at least 36 agencies have issued such a rule. The regulatory framework differs slightly from the procurement debarment system. The procedures are basically similar, with suspended persons entitled to appear in person or submit written argument and information after the suspension is effective, and a further informal hearing available in cases with disputed issues of material fact. Unlike in the procurement context, however, a proposed debarment does not have immediate effect. Nor do the nonprocurement regulations contain a list of factors the debarring official should consider in connection with the decision whether to debar or suspend.

As in the procurement context, nonprocurement debarments and suspensions have executive branch-wide effect and the GSA publishes a list of those debarred or suspended. However, those debarred or suspended under one (e.g., the nonprocurement) system are not now debarred from the other; i.e., there is no reciprocal effect.

* * * * *

Debarments and suspensions under both regulatory programs generally may not exceed 3 years. They may be terminated on a showing that, among other things, there has been a bona fide change in ownership or management, or that the causes on which the debarment was based have been eliminated.

Discussion

Although the nonprocurement and procurement debarment programs appear generally to be functioning fairly well, the Conference does recommend some changes to make the process more efficient and more fair.

A. Reciprocal Effect

As noted, the procurement and nonprocurement systems, while each having government-wide effect, do not have reciprocal effect. Legislation[5] and an executive order[6] have mandated that this problem be resolved, and the Conference underscores the importance of making the appropriate regulatory modifications promptly to ensure that debarment or suspension under one system leads to debarment or suspension under both. The Conference also believes that the existing provisions allowing agency heads to waive the applicability of a government-wide debarment or suspension for their agency should be retained.[7]

B. Debarring Officials and Hearing Officers

Neither regulatory framework specifies criteria for appointing the debarring official. Some agencies have written specifications identifying the type of official who is to perform this function, as well as the official who is to serve as a hearing officer in the relatively few cases where informal hearings on disputed issues of fact are held. However, there is no uniformity among the agencies that have established these criteria. For example, at the Department of Housing and Urban Development, where hearings are relatively frequent, administrative law judges

[16] See Pub. L. No. 103–325, which requires each federal banking agency to appoint an ombudsman. See Administrative Conference Recommendation 90–2, ''The Ombudsman in Federal Agencies,'' 1 CFR 305.90–2 (1993).

[1] The FAR Council includes representatives of the Office of Federal Procurement Policy in OMB, the General Services Administration, NASA, and the Department of Defense.

[2] 48 CFR § 9.400 et seq.

[3] 53 Fed. Reg. 19,204 (1988).

[4] For example, 96 percent of the Air Force's debarments and suspensions are based on indictments and convictions. Neither the Army, Air Force, Defense Logistics Agency, nor the Navy has had fact-based hearings in any debarment or suspension cases in the last 5 years.

[5] The Federal Acquisition Streamlining Act, Pub. L. No. 103–355 (1994).

[6] Executive Order 12689, issued in 1989.

[7] Waiver and exception procedures are currently found in the FAR at 48 CFR 9.406–1(c), 9.407–1(d), and in the Common Rule at X.215.

(ALJs) or board of contract appeals (BCA) judges serve in effect as debarring officials, while also presiding over the hearings. At the Department of the Air Force, the debarring official is the Assistant General Counsel for Contractor Responsibility, and a military trial judge presides over any factfinding proceedings. The Environmental Protection Agency's debarring official is the director of its Office of Grants and Debarment, but the agency uses hearing officers who do not have the institutional independence of an ALJ, BCA judge, or military judge. Few agencies expressly require either the debarring official or the hearing officer to have any specific level of institutional independence.

The informal nature of the adjudication, as well as the process for a prehearing suspension, have been consistently upheld by the courts as providing due process. Courts have occasionally discussed the need to ensure some measure of independence on the part of adjudicators.[8] Neither the FAR nor the Common Rule explicitly addresses the issue. Given the informal character of debarment and suspension determinations, as well as the ''business'' protection basis for such decisions, the strict separation of functions and total avoidance of ex parte contacts that would apply in more formal contexts may not be needed. However, it is important that the debarring official be sufficiently independent to protect due process. It is, for example, good practice that the debarring official not be supervised by nor directly supervise the investigators or advocates who are developing the cases. It is also good practice for debarring officials generally to ensure that all information that serves as the basis for decision appears in the administrative record, and that it is made available to the respondent in contested cases.

When there is a hearing to resolve disputed issues of material fact in a suspension or debarment case, a greater degree of independence ought to be required on the part of the hearing officer. The Administrative Conference has recently taken the position that cases involving ''imposition of sanctions with substantial economic effect'' should be heard by administrative law judges.[9] Debarments and suspensions clearly can have substantial economic effect. Depending on the type of entity and the nature of its business, a debarment from federal contracts or other benefits may bankrupt a company. Therefore, while a full APA formal hearing is not constitutionally required in debarment and suspension cases, even where there are disputed issues of fact, use of a truly independent hearing officer is consistent with notions, and appearances, of fairness. In some statutory debarment programs, Congress has required that post-debarment hearings be presided over by ALJs.[10] ALJs clearly have the requisite independence. Administrative judges from boards of contract appeals and military judges have similar independence. They are experienced in providing hearings that ensure that the respondent has the proper opportunity to present a case. Using only such independent judges for factfinding hearings would also ensure uniformity among agencies; since a debarment has government-wide effect, the nature of a fact-finding hearing should not depend on the particular agency taking the action. The Conference therefore recommends that, where there are disputed issues of material fact in debarment or suspension cases, the agency assign an ALJ, BCA judge, or military judge to preside over the hearing. If an agency wishes to use some other hearing officer, it should ensure that such officer is guaranteed independence comparable to that of an ALJ.[11] Agencies should also provide in their rules whether the judge would issue (a) findings of fact that would be certified to the debarring official; (b) a recommended decision to the debarring official; or (c) an initial decision, subject to any appropriate further appeal within the agency.[12]

C. The FAR and Common Rule

As discussed above, the two sets of procedures, for procurement and for nonprocurement debarment and suspension, are not identical. Some of the variations relate to the differing natures of the programs they address. On other issues, uniformity might serve to eliminate confusion, especially in light of the government-wide effect and (hopefully soon-to-be) reciprocal impact. At a minimum, there are several issues that the Conference recommends be addressed in each set of rules.

Both nonprocurement and procurement debarments and suspensions are discretionary. The procurement regulations include a list of mitigating factors the debarring official should consider in determining whether to debar or suspend.[13] No such list exists in the nonprocurement context, and neither program has a list of aggravating factors. The Conference recommends that a list of mitigating and aggravating factors be included in the regulations for both programs. These lists should be considered by debarring officials both in determining whether to impose a debarment or suspension, and in determining the period of debarment.[14] The Conference takes no position on whether any such list should represent an exclusive list of factors to be considered, but does recommend that each agency make clear its intention with respect to exclusivity. The Conference also notes that both aggravating and mitigating circumstances should focus on issues relating to the respondent's ''present responsibility'' to avoid any appearance that the debarment is intended as punishment.

As noted, each type of debarment is effective across the executive branch. There will thus be cases where a particular entity does business with multiple agencies. The Conference recommends that a procedure be developed by which agencies can efficiently and routinely coordinate with each other and determine which agency will serve as the lead agency on behalf of the government in taking debarment and/or suspension action. This would avoid multiple actions with inconsistent results. It may also ensure that the agency with the greatest interest will handle the case. The Conference is aware that agencies considering actions relating to the same respondent do confer informally in many cases, but believes that a more uniform, regularized process for agencies to determine a lead agency in particular cases would be preferable.

As also noted, suspensions become effective immediately. The suspended respondent may, after the fact, submit written comment and information to the debarring official opposing the continuation of the suspension. In some cases, the lack of advance notice is necessary to allow an agency to protect the integrity of its contracting or nonprocurement program. In other cases, however, it may be appropriate to provide advance notice to the potential respondent that a suspension or proposed debarment may be forthcoming. In fact, some agencies do send what are in essence ''show cause'' letters in certain situations. In cases where the interests of the government would not be substantially adversely affected by providing advance notice of a suspension of proposed debarment, the Conference encourages agencies to provide such notice.

Given that debarments and suspensions have a government-wide effect and may soon also apply to both procurement and nonprocurement programs, it is especially important that respondents be given notice at the earliest opportunity of these potential impacts.

Suspensions require a finding of ''adequate evidence'' as a threshold for their issuance. Proposed debarments, which in the procurement context have a similar preclusive effect, have no such threshold. (An ultimate decision to debar must be based on the preponderance of evidence, however.) Given their immediate effect, a minimum evidentiary threshold for procurement proposals to debar would also be appropriate. The Conference recommends that proposals to debar in the procurement context require ''adequate evidence of cause to debar.''

The Administrative Conference also recommends that all agencies within the ''executive branch'' (broadly construed to include ''independent'' agencies) should implement the ''Common Rule'' and those portions of the FAR that address suspension and debarment.

[8] In Girard v. Klopfenstein, 930 F.2d 738 (9th Cir. 1991), the court suggested the need for a separation of the prosecutorial and decisionmaking functions in a debarment case, but did not explicitly decide the issue.

[9] See Recommendation 92–7, ''The Federal Administrative Judiciary,'' at ¶ A(1)(c).

[10] See 42 U.S.C. § 1320a-7(exclusion of health care providers from Medicare program participation).

[11] See 5 U.S.C. § 554(d)(2).

[12] Regarding the need to clearly set forth the appeals procedure, see Darby v. Cisneros, 113 S.Ct. 2539 (1993)(in absence of agency regulations governing agency appeal, respondents could proceed directly to court).

[13] The procurement debarment rule indicates that the debarring official ''should consider'' the mitigating factors in determining whether to debar. The suspension rule provides that the suspending official ''may, but is not required to consider'' mitigating factors in determining whether to suspend. The Conference recommends that the ''should consider'' language be used in both debarment and suspension cases.

[14] The Administrative Conference has recommended standards for mitigating statutory money penalty amounts imposed administratively. See Recommendation 79–3, ''Agency Assessment and Mitigation of Civil Money Penalties.''

D. Statutory Debarments

The procurement and nonprocurement debarment and suspension programs are based in regulation and/or executive order. There are also many statutorily-based debarment schemes, some of which also involve procurement and nonprocurement programs. In many of these statutory programs, Congress has restricted agencies' discretion whether to debar, or to determine the length of a debarment.[15] Congress has increasingly opted to require agencies to debar or suspend in particular situations. Debarment and suspension are not intended to be punitive remedies, but rather are premised on the need to protect the integrity of government programs. The Conference believes that Congress should ordinarily allow agencies to retain the discretion to determine (1) whether debarments or suspensions are appropriate in individual cases, and (2) the appropriate length of such debarments. Moreover, Congress should review existing statutory schemes that mandate debarment and/or particular terms of debarment, and determine whether they should be continued. The primary basis for recommending that agency discretion not be limited with respect to most debarment and suspension determinations is the need to retain flexibility to meet the needs of the government and the public. The Conference believes that agency officials generally would be in a better position than Congress to determine appropriate remedial sanctions in individual cases that serve both to protect the fisc and meet program needs.[16]

The co-existence of the regulatory debarment programs that are the focus of this recommendation with a broad variety of statutory debarment programs creates a number of issues that relate to the interactions between them. The Conference may in the future study these issues, which include conflicts that arise from inconsistent procedural requirements and questions about whether all statutory programs are intended to have government-wide effect.

Recommendation

I. Entities coordinating the Federal Acquisition Regulation (FAR) and the Common Rule for nonprocurement debarment, and individual agencies in their procurement and nonprocurement debarment and suspension regulations, should promptly ensure that the applicable regulations provide that suspensions or debarments from either federal procurement activities or federal nonprocurement activities have the effect of suspension or debarment from both, subject to waiver and exception procedures.[17]

II. Entities coordinating the FAR and the Common Rule, and individual agencies in their regulations, should ensure that:

A. cases involving disputed issues of material fact are referred to administrative law judges, military judges, administrative judges of boards of contract appeals, or other hearing officers who are guaranteed similar levels of independence [18] for hearing and for preparation of (1) findings of fact certified to the debarring official; (2) a recommended decision to the debarring official; or (3) an initial decision, subject to any appropriate appeal within the agency.

B. debarring officials in each agency should:

1. Be senior agency officials;

2. Be guaranteed sufficient independence to provide due process; and

3. In cases where the agency action is disputed, ensure that any information on which a decision to debar or suspend is based appears in the record of the decision.

III. Entities coordinating the FAR and the Common Rule, and individual agencies in their regulations, should provide that each regulatory scheme for suspension and debarment includes:

A. A list of mitigating and aggravating factors that an agency should consider in determining (1) whether to debar or suspend and (2) the term for any debarment;

B. A process for determining a single agency to act as the lead agency on behalf of the government in pursuing and handling a case against a person or entity that has transactions with multiple agencies;

C. (With respect to procurement debarment only) a minimum evidentiary threshold of at least ''adequate evidence of a cause to debar'' to issue a notice of proposed debarment;

D. A requirement that all respondents be given notice of the potential government-wide impact of a suspension or debarment, as well as the applicability of any such action to both procurement and nonprocurement programs; and

E. Encouragement for the use of ''show cause'' letters in appropriate cases.

IV. All federal agencies in the executive branch (broadly construed to include ''independent'' agencies) should implement the ''Common rule'' and FAR rules on suspension and debarment.

V. Congress should ordinarily refrain from limiting agencies— discretion by mandating suspensions, debarments, or fixed periods of suspension or debarment. Congress should also review existing laws that mandate suspensions, debarments, and fixed periods, to determine whether to amend the provisions to permit agency discretion to make such determinations.

[FR Doc. 95–6183 Filed 3–13–95; 8:45 am]

BILLING CODE 6110–01–P

[15] For example, DHHS is required to —exclude— from participation in the Medicare and Medicaid programs for 5 years any health care provider who is convicted of a crime related to the provision of services under those programs, or of patient abuse. 42 U.S.C. § 1320a-7(a).

[16] This recommendation should not be read to discourage Congress from providing guidelines for agencies to consider in exercising their discretion.

[17] Waiver and exception procedures are currently found in the FAR at 48 CFR 9.406–1(c), 9.407–1(d), and in the Common Rule at X.215.

[18] See 5 U.S.C. § 554(d)(2).

DEPARTMENT OF AGRICULTURE

Forest Service

Inland Native Fish Strategy

ACTION: Proposal to Prepare Interim Direction for Native Inland Fish Habitat Management.

SUMMARY: The notice is hereby given that the Forest Service, in cooperation with the Bureau of Land Management and U.S. Fish and Wildlife Service, is gathering information in order to prepare an Environmental Assessment (EA) for a proposal to protect habitat and populations of native inland fish. The Forest Service is proposing to amend Regional Guides and Forest Plans to include interim direction in the form of riparian management objectives, standards and guidelines, and monitoring requirements. The interim direction will apply to the geographic area covered by the Eastside Ecosystem Management Strategy Environmental Impact Statement (EIS) and Upper Columbia River Basin EIS, except for anadromous fish habitat (which is now being managed under the interim PACFISH strategy, approved February 24, 1995).

The purpose and need for the proposed action is to preserve management options for inland aquatic resources by reducing the risk of loss of populations and reducing potential negative impacts to aquatic habitat of resident fishes until the signing of Records of Decision for both EISs. As a companion to the protection provided for anadromous fish by PACFISH, this Environmental Assessment is intended to provide the basis for establishing appropriate interim direction to protect habitat and populations of resident native fishes outside of anadromous fish habitat, including bull trout which has recently been determined to be warranted by the U.S. Fish and Wildlife Service (**Federal Register** Vol. 59, No. 111, June 10, 1994, pp. 30254–30255). Specifically this EA will address National Forest System lands on the Bitterroot, Boise, Caribou, Challis, Clearwater, Colville, Deerlodge, Deschutes, Flathead, Fremont, Helena, Humboldt, Kootenai, Lolo, Malheur, Ochoco, Panhandle, Payette, Salmon, Sawtooth, Wallowa-Whitman, and Winema National Forests in the Northern, Intermountain, and Pacific Northwest Regions.

The Forest Service also serves notice that the agency is seeking information and comments from Federal, State, and local agencies and other individuals or organizations who may be interested in or affected by the proposed action. This input will be used in preparing the Environmental Assessment.

Written comments should be sent to the agency within 30 days from the date of publication in the **Federal Register**.

ADDRESSES: Send written comments to USDA Forest Service, Idaho Panhandle

National Forests, 3815 Schreiber Way, Coeur d'Alene, Idaho, 83814.

FOR FURTHER INFORMATION CONTACT: Questions about the proposed action and environmental assessment should be directed to David Wright, Team Leader, Idaho Panhandle National Forests, 3815 Schreiber Way, Coeur d'Alene, Idaho, 83814. Phone: (208) 765–7307.

SUPPLEMENTARY INFORMATION: The Forest Service, in accordance with 16 USC 1604 and 36 CFR 219 et seq. develops land and resource management plans to provide for multiple use and sustained yield of products and services including outdoor recreation, range, timber, watershed, wildlife and fish, and wilderness.

PACFISH is the Anadromous Fish Habitat and Watershed Conservation Strategy being implemented by the Forest Service and Bureau of Land Management. This is an interim strategy to conserve Pacific Salmon, steelhead and sea-run cutthroat trout throughout their range in Oregon, Washington, Idaho and portions of California. The PACFISH decision notice was signed by Forest Service and Bureau of Land Management on February 24, 1995.

There are two ecosystem-based environmental impact statements being prepared for National Forest System and BLM-administered land in the Interior Columbia River Basin. The Eastside Ecosystem Management Strategy EIS applies to the area of Washington and Oregon east of the crest of the Cascade mountain range. The Upper Columbia River Basin EIS will apply to Idaho and portions of Utah, Wyoming, Nevada,and Montana. The two documents will contain long-term strategies designed to replace the interim protection afforded by PACFISH and this Inland Native Fish Strategy.

Concurrently, the Forest Service in the Pacific Northwest is completing an EA that proposes to amend the interim Forest Plan Direction issued on May 20, 1994 by Regional Forester John Lowe. This EA proposes adjustments to the Historic Range of Variability and portions of the wildlife screen. Any changes to the riparian screen portion of the current direction will be considered in the Inland Native Fish Strategy.

At its discretion, the Forest Service may amend forest plans based on the results of monitoring and evaluation (36 CFR 219.10(f), 219.12(k)). Review of research reports and published professional papers (Rieman and McIntyre 1993; Sedell et al. 1990; Grumbine 1990; Williams and Neves 1992; Oregon Trout 1994) indicates that additional long-term programmatic protection may be warranted for native resident fish and their habitat. That long-term direction is being developed through the Columbia River Basin EIS process. This interim protection is being proposed to preserve options for long-term management that might be adopted as a result of those processes.

A range of alternatives will be considered. One of these will be the ''no-action'' alternative, in which current management of the area would continue without interim direction protection. Other alternatives will examine the effects of varying approaches to interim protection.

During the scoping process, the Forest Service is seeking information and comments from Federal, State, and local agencies and other individuals or organizations who may be interested in or affected by the proposed action. Additional information will be utilized from the scoping activities that occurred for the PACFISH, Upper Columbia River Basin EIS and Eastside Ecosystem Management Strategy EIS. During scoping activities for these projects, issues and concerns were identified that relate to inland fisheries and may have bearing on this environmental analysis.

The responsible officials for National Forest System lands will be the Regional Foresters for the:

—Intermountain Region, Federal Building, 324 25th Street, Ogden, Utah 84401;
—Northern Region, P.O. Box 7669, Missoula, Montana 59807; and
—Pacific Northwest Region, P.O. Box 3623, Portland, Oregon 97208.

The decision and reasons for the decision will be documented in a Decision Notice. The Environmental Assessment and Decision Notice are expected to be available in June, 1995.

Dated: March 8, 1995.

David J. Wright,

Inland Native Fish Team Leader, Idaho Panhandle National Forests.

[FR Doc. 95–6255 Filed 3–13–95; 8:45 am]

BILLING CODE 3410–11–M

DEPARTMENT OF COMMERCE

International Trade Administration

[C–122–816]

Certain Softwood Lumber from Canada; Determination to Terminate and Not To Initiate Countervailing Duty Administrative Reviews

AGENCY: Import Administration, International Trade Administration, Department of Commerce.

ACTION: Notice of determination to terminate and not to initiate countervailing duty administrative reviews.

SUMMARY: The Department of Commerce (the Department) has decided to terminate the first administrative review of the countervailing duty order on certain softwood lumber from Canada initiated on August 24, 1993, and not to initiate the second administrative review.

EFFECTIVE DATE: March 14, 1995.

FOR FURTHER INFORMATION CONTACT: Martina Tkadlec or Kelly Parkhill, Office of Countervailing Compliance, Import Administration, International Trade Administration, U.S. Department of Commerce, 14th Street and Constitution Avenue, NW., Washington, DC 20230; telephone: (202) 482–2786.

SUPPLEMENTARY INFORMATION: On July 30, 1993, the Coalition for Fair Lumber Imports (the Coalition), the Government of Canada, and the Government of Quebec requested an administrative review of the countervailing duty order on certain softwood lumber from Canada for the period March 12, 1992 through March 31, 1993. In addition, one hundred and ninety companies requested individual company reviews. On August 24, 1993, the Department published a notice initiating the administrative reviews for that period (58 FR 44653).

On July 28, 1994, the Coalition requested an administrative review of the countervailing duty order on softwood lumber from Canada for the period April 1, 1993 through March 16, 1994. On August 1, 1994, the Government of Canada requested an administrative review for the same period. In addition, one hundred and five companies requested individual company reviews.

On August 16, 1994, the Department revoked the countervailing duty order on softwood lumber from Canada pursuant to a decision of the Binational Panel convened under the United States-Canada Free Trade Agreement (59 FR 42029), and instructed the U.S. Customs Service to (1) stop collecting cash deposits on imports of softwood lumber from Canada, and (2) refund, with interest, all cash deposits made on or after March 17, 1994, the effective date of the Binational Panel's decision.

On December 15, 1994, the United States and Canada agreed to enter into consultations to try to resolve the trade dispute regarding softwood lumber from Canada. The Department also decided, under the authority of the Tariff Act of 1930, as amended, to compromise its

claim for duties on softwood lumber from Canada. This compromise resolved all remaining claims of the United States arising from the countervailing duty order on softwood lumber from Canada.

Since there is no further basis for conducting administrative reviews of the countervailing duty order on softwood lumber from Canada, the Department is terminating the administrative review for the period March 12, 1992 through March 31, 1993, and will not initiate the administrative review for the period April 1, 1993 through March 16, 1994.

Dated: March 7, 1995.

Paul L. Joffe,

Deputy Assistant Secretary for Import Administration.

[FR Doc. 95–6256 Filed 3–13–95; 8:45 am]

BILLING CODE 3510–DS–P

[A–834–802]

Agreement Suspending the Antidumping Investigation on Uranium From Kazakhstan

AGENCY: Import Administration, International Trade Administration, Department of Commerce.

ACTION: Notice of Amendment to the Agreement Between the United States Department of Commerce and the Republic of Kazakhstan Suspending the Antidumping Investigation on Uranium from Kazakhstan.

SUMMARY: The Department of Commerce (the Department) and the Republic of Kazakhstan (Kazakhstan) have signed an Amendment (the Amendment) to the Agreement Suspending the Antidumping Investigation on Uranium from Kazakhstan (the Agreement).

EFFECTIVE DATE: February 7, 1995.

FOR FURTHER INFORMATION CONTACT: James Doyle or Maureen Price, Office of Agreements Compliance, Import Administration, International Trade Administration, U.S. Department of Commerce, 14th Street and Constitution Avenue, NW., Washington, DC 20230; telephone: (202) 482–0172 or (202) 482–0159, respectively.

SUPPLEMENTARY INFORMATION:

Background

On October 16, 1992, the Department and Kazakhstan signed the Agreement and, on October 30, 1992, the Agreement was published in the **Federal Register** (57 FR 49220, 49222). On November 9, 1994, the Department and Kazakhstan initialled an Amendment to include highly enriched uranium (HEU) within the product coverage of the Agreement. The Department subsequently released the Amendment to interested parties for comment. After careful consideration by the Department of the comments submitted and further consultations between the parties, the Department and Kazakhstan signed a final Amendment on February 7, 1995. The text of the final Amendment follows this notice.

Date: March 6, 1995.

Paul L. Joffe,

Deputy Assistant Secretary for Import Administration.

Amendment to the Agreement Between the United States Department of Commerce and the Republic of Kazakhstan Suspending the Antidumping Investigation on Uranium from Kazakhstan

The United States Department of Commerce and the Republic of Kazakhstan hereby amend their Agreement Suspending the Antidumping Investigation on Uranium from Kazakhstan, signed October 16, 1992, as follows:

Section III, ''Product Coverage,'' is amended to include the following paragraph:

Highly enriched uranium (''HEU'') is within the scope of this investigation, and HEU is covered by this Agreement. For the purpose of this Agreement, HEU means uranium enriched to 20 percent or greater in the isotope uranium-235, whether in the form of metal, uranium oxide, fuel rods, or powder.

Section IV is amended to include the following paragraph L:

L.1. Exports of HEU pursuant to the Purchase Agreement Between the Government of the United States of America and the Republic of Kazakhstan, completed November 17, 1994 (''Purchase Agreement'') will not be counted against the export limits established in accordance with paragraph C of this section. The disposition of the HEU is in the public interest because: (1) the HEU or products from it will be processed or delivered by the United States Department of Energy, its governmental successors, its contractors, assigns, or U.S. private parties acting in a manner not inconsistent with the Purchase Agreement; (2) any utility-owned uranium products delivered pursuant to enrichment contracts affected by the purchase of HEU or HEU products will not be resold in the United States, either as natural uranium or as low enriched uranium (''LEU'') produced in excess of the contractually-specified amount; (3) contracts for the purchase of HEU or HEU products from Kazakhstan will be provided to the Department; (4) annual summaries of utilization of HEU and HEU products and associated utility feed will be provided to the Department; and (5) the Department determines that permitting importation of all or any portion of the HEU in question is consistent with the purposes of this Agreement.

2. Exports of HEU must be accompanied by an export certificate endorsed by the Republic of Kazakhstan specifying the amount of the export.

This Amendment constitutes an integral part of the Agreement Between the United States Department of Commerce and the Republic of Kazakhstan Suspending the Antidumping Investigation on Uranium from Kazakhstan.

Signed on this 7th day of February, 1995.

For the Republic of Kazakhstan:

Tuleutai S. Suleimenov,

Ambassador to the United States.

For the United States Department of Commerce:

Paul L. Joffe,

Deputy Assistant Secretary for Import Administration.

[FR Doc. 95–6257 Filed 3–13–95; 8:45 am]

BILLING CODE 33510–DS–P

Applications for Duty-Free Entry of Scientific Instruments

Pursuant to Section 6(c) of the Educational, Scientific and Cultural Materials Importation Act of 1966 (Pub. L. 89–651; 80 Stat. 897; 15 CFR part 301), we invite comments on the question of whether instruments of equivalent scientific value, for the purposes for which the instruments shown below are intended to be used, are being manufactured in the United States.

Comments must comply with 15 CFR 301.5(a)(3) and (4) of the regulations and be filed within 20 days with the Statutory Import Programs Staff, U.S. Department of Commerce, Washington, D.C. 20230. Applications may be examined between 8:30 A.M. and 5:00 P.M. in Room 4211, U.S. Department of Commerce, 14th Street and Constitution Avenue, N.W., Washington, D.C.

Docket Number: 95–008. *Applicant:* U.S. Department of Energy, 1000 Independence Ave., SW, Washington, DC 20585. *Instrument:* Fuel Cell. *Manufacturer:* Fuji Electric Company, Japan. *Intended Use:* The instrument will be used to convert hydrogen and oxygen into electrical power during studies of the use of a phosphoric acid fuel cell to propel an urban transit bus.

Application Accepted by Commissioner of Customs: February 2, 1995.

Docket Number: 95–009. *Applicant:* University of Texas at Austin, Center for Space Research, WRW 402, Campus Code C0605, Austin, TX 78712. *Instrument:* Precise Range and Range-rate Equipment Satellite Tracking Ground Station. *Manufacturer:* Dornier GmbH, Germany. *Intended Use:* The instrument will be used to provide ground based tracking support for European Space Agency and Earth-Remote Sensing Satellite. Knowing the precise location of the ERS-2 satellite, the satellite measurements can be accurately reduced to study climate and environmental related phenomenon. *Application Accepted by Commissioner of Customs:* February 9, 1995.

Docket Number: 95–010. *Applicant:* Skidaway Institute of Oceanography, University System of Georgia, 10 Ocean Science Circle, Savannah, GA 31411. *Instrument:* Laser Ablation Accessory, Electrothermal Vaporization System, Desolvating Nebulizer. *Manufacturer:* Fisons, United Kingdom. *Intended Use:* The instruments are accessories to an existing mass spectrometer used to enhance trace metal analysis capabilities when investigating water, sediment, tissue and any type of solid sample. *Application Accepted by Commissioner of Customs:* February 14, 1995.

Docket Number: 95–011. *Applicant:* Columbia University in the City of New York, Biological Sciences, 500 Fairchild Bldg., New York, NY 10027. *Instrument:* High Energy Xenon Flashlamp System, Model XF-10. *Manufacturer:* Hi-Tech Scientific, United Kingdom. *Intended Use:* The instrument will be used for flash photolysis of ''caged'' compounds including caged calcium, a technique used to examine the effect of local elevations of calcium in muscle cells on transmitter release from neurons which synapse on that muscle cell. These experiments are conducted with the hope of achieving a more complete understanding of how transmitter is released and how this release is controlled. *Application Accepted by Commissioner of Customs:* February 14, 1995.

Frank Creel

Director, Statutory Import Programs Staff

[FR Doc. 95–6262 Filed 3–13–95; 8:45 am]

BILLING CODE 3510–DS–F

University of Colorado at Boulder, et al.; Notice of Consolidated Decision on Applications for Duty-Free Entry of Scientific Instruments

This is a decision consolidated pursuant to Section 6(c) of the Educational, Scientific, and Cultural Materials Importation Act of 1966 (Pub. L. 89–651, 80 Stat. 897; 15 CFR part 301). Related records can be viewed between 8:30 A.M. and 5:00 P.M. in Room 4211, U.S. Department of Commerce, 14th and Constitution Avenue, N.W., Washington, D.C.

Comments: None received. *Decision:* Approved. No instrument of equivalent scientific value to the foreign instruments described below, for such purposes as each is intended to be used, is being manufactured in the United States.

Docket Number: 94–118. *Applicant:* University of Colorado at Boulder, Boulder, CO 80309. *Instrument:* Microvolume Stopped-flow Spectrometer, Model SX.17MV. *Manufacturer:* Applied Photophysics, United Kingdom. *Intended Use:* See notice at 59 FR 52958, October 20, 1994. *Reasons:* The foreign instrument provides: (1) pneumatic syringe drive, (2) computer acquisition of time-resolved emission spectra and (3) analysis of samples as small as 25 µl. *Advice Received From:* The National Institutes of Health, January 9, 1995.

Docket Number: 94–120. *Applicant:* Northern Illinois University, DeKalb, IL 60115. *Instrument:* Microvolume Stopped-Flow Spectrofluorimeter, Model SX.17MV. *Manufacturer:* Applied Photophysics Ltd., United Kingdom. *Intended Use:* See notice at 59 FR 52958, October 20, 1994. *Reasons:* The foreign instrument provides: (1) time resolution of 0.01 ms with 0.85 ms dead time and (2) detection of small absorbance changes at high absorbance values. *Advice Received From:* The National Institutes of Health, January 9, 1995.

The National Institutes of Health advises that (1) the capabilities of each of the foreign instruments described above are pertinent to each applicant's intended purpose and (2) they know of no domestic instrument or apparatus of equivalent scientific value for the intended use of each instrument.

We know of no other instrument or apparatus being manufactured in the United States which is of equivalent scientific value to either of the foreign instruments.

Frank Creel

Director, Statutory Import Programs Staff

[FR Doc. 95–6263 Filed 3–13–95; 8:45 am]

BILLING CODE 3510–DS–F

U.S. Bureau of Mines, et al.; Notice of Consolidated Decision on Applications for Duty-Free Entry of Electron Microscopes

This is a decision consolidated pursuant to Section 6(c) of the Educational, Scientific, and Cultural Materials Importation Act of 1966 (Pub. L. 89–651, 80 Stat. 897; 15 CFR part 301). Related records can be viewed between 8:30 A.M. and 5:00 P.M. in Room 4211, U.S. Department of Commerce, 14th and Constitution Avenue, N.W., Washington, D.C.

Docket Number: 94–143. *Applicant:* U.S. Bureau of Mines, Denver, CO 80225. *Instrument:* Electron Microscope, Model CM200. *Manufacturer:* Philips, The Netherlands. *Intended Use:* See notice at 60 FR 442, January 4, 1995. *Order Date:* August 25, 1994.

Docket Number: 94–147. *Applicant:* Wayne State University, Detroit, MI 48201. *Instrument:* Electron Microscope, Model JEM-1010. *Manufacturer:* JEOL, Japan. *Intended Use:* See notice at 60 FR 3394, January 17, 1995. *Order Date:* October 24, 1994.

Docket Number: 94–152. *Applicant:* University of Virginia, Charlottesvilee, VA 22903. *Instrument:* Electron Microscope, Model JEM 2010F. *Manufacturer:* JEOL, Japan. *Intended Use:* See notice at 60 FR 3394, January 17, 1995. *Order Date:* June 29, 1994.

Comments: None received. *Decision:* Approved. No instrument of equivalent scientific value to the foreign instrument, for such purposes as these instruments are intended to be used, was being manufactured in the United States at the time the instruments were ordered. *Reasons:* Each foreign instrument is a conventional transmission electron microscope (CTEM) and is intended for research or scientific educational uses requiring a CTEM. We know of no CTEM, or any other instrument suited to these purposes, which was being manufactured in the United States either at the time of order of each instrument or at the time of receipt of application by the U.S. Customs Service.

Frank Creel

Director, Statutory Import Programs Staff

[FR Doc. 95–6260 Filed 3–13–95; 8:45 am]

BILLING CODE 3510–DS–F

University of California, Notice of Decision on Application for Duty-Free Entry of Scientific Instrument

This decision is made pursuant to Section 6(c) of the Educational,

Scientific, and Cultural Materials Importation Act of 1966 (Pub. L. 89–651, 80 Stat. 897; 15 CFR part 301). Related records can be viewed between 8:30 A.M. and 5:00 P.M. in Room 4211, U.S. Department of Commerce, 14th and Constitution Avenue, N.W., Washington, D.C.

Docket Number: 94–104. *Applicant:* University of California, San Diego, La Jolla, CA 92093. *Instrument:* Imaging Plate X-ray Detector for Protein Crystallography. *Manufacturer:* Mar Research, Germany. *Intended Use:* See notice at 59 FR 49645, September 29, 1994.

Comments: None received. *Decision:* Approved. No instrument of equivalent scientific value to the foreign instrument, for such purposes as it is intended to be used, is being manufactured in the United States. *Reasons:* The foreign instrument provides: (1) high efficiency detection of molybdenum K_α x-rays at resolution to 0.12nm and (2) exposure time of just 90s allowing use of a single imaging plate under computer control and data readout. National Institutes of Health advises in its memorandum dated January 9, 1995 that (1) these capabilities are pertinent to the applicant's intended purpose and (2) it knows of no domestic instrument or apparatus of equivalent scientific value to the foreign instrument for the applicant's intended use.

We know of no other instrument or apparatus of equivalent scientific value to the foreign instrument which is being manufactured in the United States.

Frank Creel

Director, Statutory Import Programs Staff

[FR Doc. 95–6258 Filed 3–13–95; 8:45 am]

BILLING CODE 3510–DS–F

Medical College of Pennsylvania, et al.; Notice of Consolidated Decision on Applications for Duty-Free Entry of Scientific Instruments

This is a decision consolidated pursuant to Section 6(c) of the Educational, Scientific, and Cultural Materials Importation Act of 1966 (Pub. L. 89–651, 80 Stat. 897; 15 CFR part 301). Related records can be viewed between 8:30 A.M. and 5:00 P.M. in Room 4211, U.S. Department of Commerce, 14th and Constitution Avenue, N.W., Washington, D.C.

Comments: None received. *Decision:* Approved. No instrument of equivalent scientific value to the foreign instruments described below, for such purposes as each is intended to be used, is being manufactured in the United States.

Docket Number: 94–109. *Applicant:* Medical College of Pennsylvania, Philadelphia, PA 19129. *Instrument:* High Intensity Xenon Flashlamp System, Model HF-10. *Manufacturer:* Hi-Tech Scientific, United Kingdom. *Intended Use:* See notice at 59 FR 52288, October 17, 1994. *Reasons:* The foreign instrument provides: (1) stored electrical energy to 340 J, (2) anti-reflection coated quartz optics for focusing and (3) optical/electrical shielding. *Advice Received From:* National Institutes of Health, January 9, 1995.

Docket Number: 94–114. *Applicant:* University of Illinois at Urbana, IL 61801. *Instrument:* Aqua-Tox-Control-Daphnia Monitor. *Manufacturer:* Kerre Umwelt Technik GmbH, Germany. *Intended Use:* See notice at 59 FR 52958, October 20, 1994. *Reasons:* The foreign instrument provides use of small invertebrate organisms as rapid indicators of toxicity in aqueous sources. *Advice Received From:* National Institutes of Health, January 9, 1995.

Docket Number: 94–115. *Applicant:* University of California, Davis, CA 95616. *Instrument:* High Intensity Xenon Flashlamp System, Model XF-10. *Manufacturer:* Hi-Tech Scientific, United Kingdom. *Intended Use:* See notice at 59 FR 52958, October 20, 1994. *Reasons:* The foreign instrument provides: (1) stored electrical energy to 340 J, (2) anti-reflection coated quartz optics for focusing and (3) optical/electrical shielding. *Advice Received From:* National Institutes of Health, January 9, 1995.

Docket Number: 94–119. *Applicant:* Howard Hughes Medical Institute, Houston, TX 77030. *Instrument:* X-Ray Diffraction Image Processor, Model DIP-2030. *Manufacturer:* Mac Science Co., Ltd., Japan. *Intended Use:* See notice at 59 FR 52958, October 20, 1994. *Reasons:* The foreign instrument provides: (1) sensitivity of 1 x-ray proton per level, (2) dynamic range of 10^6 and (3) measurement with pseudo - Weissenberg geometry. *Advice Received From:* National Institutes of Health, January 9, 1995.

The National Institutes of Health advises that (1) the capabilities of each of the foreign instruments described above are pertinent to each applicant's intended purpose and (2) they know of no domestic instrument or apparatus of equivalent scientific value for the intended use of each instrument.

We know of no other instrument or apparatus being manufactured in the United States which is of equivalent scientific value to any of the foreign instruments.

Frank Creel

Director, Statutory Import Programs Staff

[FR Doc. 95–6259 Filed 3–13–95; 8:45 am]

BILLING CODE 3510–DS–F

University of California, Notice of Decision on Application for Duty-Free Entry of Scientific Instrument

This decision is made pursuant to Section 6(c) of the Educational, Scientific, and Cultural Materials Importation Act of 1966 (Pub. L. 89–651, 80 Stat. 897; 15 CFR part 301). Related records can be viewed between 8:30 A.M. and 5:00 P.M. in Room 4211, U.S. Department of Commerce, 14th and Constitution Avenue, N.W., Washington, D.C.

Docket Number: 94–139. *Applicant:* University of California, Santa Cruz, CA 95064. *Instrument:* ICP Mass Spectrometer, Model ELEMENT. *Manufacturer:* Finnigan MAT GmbH, Germany. *Intended Use:* See notice at 59 FR 66941, December 28, 1994.

Comments: None received. *Decision:* Approved. No instrument of equivalent scientific value to the foreign instrument, for such purposes as it is intended to be used, is being manufactured in the United States. *Reasons:* The foreign instrument provides: (1) a double-focussing magnetic sector analyzer, (2) resolution to 7500, (3) laser ablation and glow discharge ion sources and (4) sub-ppb measurements of the transition elements. These capabilities are pertinent to the applicant's intended purpose and we know of no instrument or apparatus of equivalent scientific value to the foreign instrument which is being manufactured in the United States.

Frank Creel

Director, Statutory Import Programs Staff

[FR Doc. 95–6264 Filed 3–13–95; 8:45 am]

BILLING CODE 3510–DS–F

University of Massachusetts Dartmouth, Notice of Decision on Application for Duty-Free Entry of Scientific Instrument

This decision is made pursuant to Section 6(c) of the Educational, Scientific, and Cultural Materials Importation Act of 1966 (Pub. L. 89–651, 80 Stat. 897; 15 CFR part 301). Related records can be viewed between 8:30 AM and 5:00 PM in Room 4211, U.S. Department of Commerce, 14th and

Constitution Avenue, N.W., Washington, D.C.

Docket Number: 94–100. *Applicant:* University of Massachusetts Dartmouth, N. Dartmouth, MA 02747. *Instrument:* Pneumatic Drive Accessory for stopped-flow kinetics apparatus, Model Opt.12P. *Manufacturer:* Hi-Tech Scientific, United Kingdom. *Intended Use:* See notice at 59 FR 49645, September 29, 1994.

Comments: None received. *Decision:* Approved. No instrument of equivalent scientific value to the foreign instrument, for such purposes as it is intended to be used, is being manufactured in the United States. *Reasons:* This is a compatible accessory for an existing instrument purchased for the use of the applicant. The National Institutes of Health advises in its memorandum dated January 9, 1995, that the accessory is pertinent to the intended uses and that it knows of no comparable domestic accessory.

We know of no domestic accessory which can be readily adapted to the existing instrument.

Frank Creel

Director, Statutory Import Programs Staff

[FR Doc. 95–6265 Filed 3–13–95; 8:45 am]

BILLING CODE 3510–DS–F

COMMISSION ON IMMIGRATION REFORM

Phoenix Roundtables

AGENCY: Commission on Immigration Reform.

ACTION: Announcement of Commission Roundtables.

This notice announces a roundtable to be held by the U.S. Commission on Immigration Reform in Phoenix, AZ on March 22, 1995. The Commission, created by Section 141 of the Immigration Act of 1990, is mandated to review the Implementation and impact of U.S. Immigration policy and report its findings to Congress. An interim report, ''U.S. Immigration Policy: Restoring Credibility,'' was issued on September 30, 1994; the final report is due in 1997.

The roundtable participants will include the Commissioners, researchers, government officials, representatives of local organizations, and other experts. The roundtable will examine immigration as a contributor to population change and the resulting effects on services, the economy and natural resources. This subject will be examined from both the local and national perspectives.

DATES: March 22, 1995.

TIMES: 9:00 AM–1:00 PM (Impact on Population Change).

ADDRESSES: Sheration Mesa Hotel, 200 North Centennial Way, Mesa, AZ 85201, 602–898–8300.

FOR FURTHER INFORMATION: Paul Donnelly (202) 673–5348.

Dated: March 7, 1995.

Susan Martin,

Executive Director.

[FR Doc. 95–6151 Filed 3–13–95; 8:45 am]

BILLING CODE 6820–97–M

CORPORATION FOR NATIONAL AND COMMUNITY SERVICE

Notice of Information collection request

AGENCY: Corporation for National and Community Service.

ACTION: Information Collection Request submitted to the Federal Office of Management and Budget (FOMB) for review.

SUMMARY: This notice provides information about a data collection proposal by AmeriCorps *National Civilian Community Corps (A*NCCC) currently under review by the Office of Management and Budget (OMB). The revised AmeriCorps*NCCC Team Leader Application is a document, based on the previously approved AmeriCorps Leaders application (OMB) Approval No. 3045–0005). It is to be used for the purpose of screening applicants in the recruitment process for AmeriCorps*NCCC Team Leaders. The revisions are as follows:

A. Page One, section I., ''Personal Information'', was expanded to include a section requesting the applicant's preferred campus location on which to serve.

B. Page One, section III., ''National and Community Service Background,'' was redesigned with the, ''Skills and Employment History,'' title. This section requests Team Leader applicants complete the following ''Skills Self-Assessment'' and to attach a resume-type document which includes a listing of professional experience and service organizations with whom the applicant has worked.

C. The section IV., ''Skills in National Service Priority Areas,'' was replaced with a ''Skills Self-Assessment''.

D. The applicant reference form was expanded to include a skills assessment from the reference. The skills assessment form works with the same list as the self-assessment form.

E. The section VII., ''Legal'' was added to request from applicants information on existence of criminal convictions or adjudications.

DATES: An expedited review has been requested in accordance with the Act, since allowing for the normal review period would adversely affect the public interest. OMB and AmeriCorps*NCCC will consider comments on the proposed collection of information and record keeping requirements on or before April 13, 1995.

ADDRESSES: Fred Peters, Deputy Director, AmeriCorps*NCCC, 1201 New York Avenue, N.W., Washington, D.C. 20525.

SEND COMMENTS TO BOTH: Dan Chenok, Desk Officer for Corporation for National Service, Office of Management and Budget, 3002 New Executive Office [1] Bldg., Washington, D.C. 20503.

FOR FURTHER INFORMATION CONTACT: Fred Peters (202) 606–5000 ext. 102.

SUPPLEMENTARY INFORMATION: Section 3517 of the Paperwork Reduction Act of 1980 (44 U.S.C. Chapter 3517) requires that the Director of OMB provide interested Federal agencies and persons an early opportunity to comment on information collection requests.

Office of Action Issuing Proposal: AmeriCorps*NCCC.

Title of Forms: AmeriCorps*NCCC Team Leader Application.

Needs and Use: AmeriCorps*NCCC is requesting information to meet requirements of federal law. This information is used for program management, planning, and required record keeping.

Type of Request: Submission of a new collection.

Respondent's Obligation to Reply: Required to receive benefits.

Frequencey of Collection: On occasion.

Estimated Number of Responses: 500.

Average Burden Hours Per Response: 2 hours (reporting and record keeping).

Estimated Annual Reporting or Disclosure Burden: 1,000 hours.

Regulatory Authority: 1990 National Service Act (as amended).

Dated: March 7, 1995.

Lew R. Heffner,

*Deputy Director, AmeriCorps*NCCC.*

[FR Doc. 95–6165 Filed 3–13–95; 8:45 am]

BILLING CODE 6050–28–M

DEPARTMENT OF DEFENSE

Department of the Army

U.S. Army Command and General Staff College Advisory Committee

AGENCY: U.S. Army Command and General Staff College, DOD.

ACTION: Meeting Notice.

In accordance with section 10(a)(2) of the Federal Advisory Committee Act (Pub. L. 92–463) announcement is made of the following committee meeting.

Name: U.S. Army Command and General Staff College (CGSC) Advisory Committee.

Date: 5–7 April 1995.

Place: Bell Hall, Room 113, Fort Leavenworth, Kansas 66027–6900.

Time: 1700–2200—5 April 1995, 0730–2100—6 April 1995, 0730–1400—7 April 1995.

Proposed Agenda: 1700–2200, 5 April: Review of CGSC educational program. 0730–2100, 6 April: Continuation of review. 0730–1030, 7 April: Continuation of review. 1030–1130, 7 April: Executive Session. 1300–1400, 7 April: Report to Commandant

The purpose of the meeting is for the Advisory Committee to examine the entire range of college operations and, where appropriate, to provide advice and recommendations to the College Commandant and faculty.

The meeting will be open to the public to the extent that space limitations of the meeting location permit. Because of these limitations, interested parties are requested to reserve space by contacting the Committee's Executive Secretary: Philip J. Brooks, USACGSC Advisory Committee, Bell Hall, Room 123, Fort Leavenworth, Kansas 66027–6900; Phone: (913) 684-2741.

Kenneth L. Denton,

Army Federal Register Liaison Officer.

[FR Doc. 95–6180 Filed 3–13–95; 8:45 am]

BILLING CODE 3710–08–M

Corps of Engineers

Regulatory Guidance Letters Issued by the Corps of Engineers

AGENCY: U.S. Army Corps of Engineers, DoD.

ACTION: Notice.

SUMMARY: The purpose of this notice is to provide current Regulatory Guidance Letters (RGL's) to all interested parties. RGL's are used by the Corps Headquarters as a means to transmit guidance on the permit program (33 CFR 320–330) to its division and district engineers (DE's). Each future RGL will be published in the Notice Section of the **Federal Register** as a means to insure the widest dissemination of this information while reducing costs to the Federal Government. The Corps no longer maintains a mailing list to furnish copies of the RGL's to the public.

FOR FURTHER INFORMATION CONTACT: Mr. Ralph Eppard, Regulatory Branch, Office of the Chief of Engineers at (202) 272–1783.

SUPPLEMENTARY INFORMATION: RGL's were developed by the Corps of Engineers as a system to organize and track written guidance issued to its field agencies. RGL's are normally issued as a result of evolving policy; judicial decisions and changes to the Corps regulations or another agency's regulations which affect the permit program. RGL's are used only to interpret or clarify existing regulatory program policy, but do provide mandatory guidance to Corps district offices. RGL's are sequentially numbered and expire on a specified date. However, unless superseded by specific provisions of subsequently issued regulations or RGL's, the guidance provided in RGL's generally remains valid after the expiration date. The Corps incorporates most of the guidance provided by RGL's whenever it revises its permit regulations. There were two RGL's issued by the Corps during 1994, and both were published in the Notice Section of the **Federal Register** upon issuance. We are hereby publishing all current RGL's, beginning with RGL 91–1 and ending with RGL 94–2. We will continue to publish each RGL in the Notice Section of the **Federal Register** upon issuance and in early 1996, we will again publish the complete list of all current RGL's.

Dated: February 6, 1995.

James E. Crews,

Acting Chief, Operations, Construction and Readiness Division, Directorate of Civil Works.

Regulatory Guidance Letter (RGL 91–1)

RGL 91–1 DATE: Dec 31, 1991 EXPIRES: Dec 31, 1996

SUBJECT: Extensions of Time For Individual Permit Authorizations

1. The purpose of this guidance is to provide clarification for district and division offices relating to extensions of time for Department of the Army permits (See 33 CFR 325.6).

2. *General:* A permittee is informed of the time limit for completing an authorized activity by General Condition #1 of the standard permit form (ENG Form 1721). This condition states that a request for an extension of time should be submitted to the authorizing official at least one month prior to the expiration date. This request should be in writing and should explain the basis of the request. The DE may consider an oral request from the permittee provided it is followed up with a written request prior to the expiration date. A request for an extension of time will usually be granted unless the DE determines that the time extension would be contrary to the public interest. The one month submittal requirement is a workload management time limit designed to prevent permittees from filing last minute time extension requests. Obviously, the one month period is not sufficient to make a final decision on all time extension requests that are processed in accordance with 33 CFR 325.2. It should be noted that a permittee may choose to request a time extension sooner than this (e.g., six months prior to the expiration date). While there is no formal time limit of this nature, a request for an extension of time should generally not be considered by the DE more than one year prior to the expiration date. A permit will automatically expire if an extension is not requested and granted prior to the applicable expiration date (See 33 CFR 325.6(d)).

3. *Requests for Time Extensions Prior to Expiration:* For requests of time extensions received prior to the expiration date, the DE should consider the following procedures if a decision on the request cannot be completed prior to the permit expiration date:

(a) The DE may grant an interim time extension while a final decision is being made; or

(b) The DE may, when appropriate, suspend the permit at the same time that an interim time extension is granted, while a final decision is being made.

4. *Requests for Time Extensions After Expiration:* A time extension cannot be granted if a time extension request is received after the applicable time limit. In such cases, a new permit application must be processed, if the permittee wishes to pursue the work. However, the DE may consider expedited processing procedures when: (1) The request is received shortly (generally 30 days) after the expiration date, (2) the DE determines that there have been no substantial changes in the attendant circumstances since the original authorization was issued, and (3) the DE believes that the time extension would likely have been granted. Expedited processing procedures may include, but are not limited to, not requiring that a new application form be submitted or issuing a 15 day public notice.

5. This guidance expires 31 December 1996 unless sooner revised or rescinded.

For the Director of Civil Works:

John P. Elmore, P.E.,

Chief, Operations, Construction and Readiness Division Directorate of Civil Works.

Regulatory Guidance Letter (RGL 92–1)

RGL 92–1 Date: 13 May 1992, Expires: 31 December 1997

Subject: Federal Agencies Roles and Responsibilities.

1. *Purpose:* The purpose of this guidance is to clarify the Army Corps of Engineers leadership and decision-making role as ''project manager'' for the evaluation of permit applications pursuant to Section 404 of the Clean Water Act (CWA) and Section 10 of the Rivers and Harbors Act. This guidance is also intended to encourage effective and efficient coordination among prospective permittees, the Corps, and the Federal resource agencies (i.e., Environmental Protection Agency (EPA), Fish and Wildlife Service (FWS), and National Marine Fisheries Service (NMFS)). Implementation of this guidance will help to streamline the permit process by minimizing delays and ensuring more timely decisions, while providing a meaningful opportunity for substantive input from all Federal agencies.

2. *Background:* (a) The Department of the Army Regulatory Program must operate in an

efficient manner in order to protect the aquatic environment and provide fair, equitable, and timely decisions to the regulated public. Clear leadership and a predictable decision-making framework will enhance the public acceptance of the program and allow the program to meet the important objective of effectively protecting the Nation's valuable aquatic resources.

(b) On August 9, 1991, the President announced a comprehensive plan for improving the protection of the Nation's wetlands. The plan seeks to balance two important objectives—the protection, restoration, and creation of wetlands and the need for sustained economic growth and development. The plan, which is designed to slow and eventually stop the net loss of wetlands, includes measures that will improve and streamline the current wetlands regulatory system. This Regulatory Guidance Letter is issued in accordance with the President's plan for protecting wetlands.

(c) The intent of this guidance is to express clearly that the Corps is the decision-maker and project manager for the Department of Army's Regulatory Program. The Corps will consider, to the maximum extent possible, all timely, project-related comments from other Federal agencies when making regulatory decisions. Furthermore, the Corps and relevant Federal agencies will maintain and improve as necessary their working relationships.

(d) The Federal resource agencies have reviewed and concurred with this guidance and have agreed to act in accordance with these provisions. While this guidance does not restrict or impair the exercise of legal authorities vested in the Federal resource agencies or States under the CWA or other statutes and regulations (e.g., EPA's authority under section 404(c), section 404(f), and CWA geographic jurisdiction and FWS/NMFS authorities under the Fish and Wildlife Coordination Act and the Endangered Species Act (ESA)), agency comments on Department of the Army permit applications must be consistent with the provisions contained in this regulatory guidance letter.

3. *The Corps Project Management/Decision Making Role:* (a) The Corps is solely responsible for making final permit decisions pursuant to section 10 and section 404(a), including final determinations of compliance with the Corps permit regulations, the Section 404(b)(1) Guidelines, and Section 7(a)(2) of the ESA. As such, the Corps will act as the project manager for the evaluation of all permit applications. The Corps will advise potential applicants of its role as the project manager and decision-maker. This guidance does not restrict EPA's authority to make determinations of compliance with the Guidelines in carrying out its responsibilities under Sections 309 and 404(c) of the Clean Water Act.

(b) As the project manager, the Corps is responsible for requesting and evaluating information concerning all permit applications. The Corps will obtain and utilize this information in a manner that moves, as rapidly as practical, the regulatory process towards a final permit decision. The Corps will not evaluate applications as a project opponent or advocate—but instead will maintain an objective evaluation, fully considering all relevant factors.

(c) The Corps will fully consider other Federal agencies' project-related comments when determining compliance with the National Environmental Policy Act (NEPA), the Section 404(b)(1) Guidelines, the ESA, the National Historic Preservation Act, and other relevant statutes, regulations, and policies. The Corps will also fully consider the agencies' views when determining whether to issue the permit, to issue the permit with conditions and/or mitigation, or to deny the permit.

4. *The Federal Resource Agencies' Role:* (a) It is recognized that the Federal resource agencies have an important role in the Department of the Army Regulatory Program under the CWA, NEPA, ESA, Magnuson Fisheries Conservation and Management Act, and other relevant statutes.

(b) When providing comments, Federal resource agencies will submit to the Corps only substantive, project-related information on the impacts of activities being evaluated by the Corps and appropriate and practicable measures to mitigate adverse impacts. The comments will be submitted within the time frames established in interagency agreements and regulations. Federal resource agencies will limit their comments to their respective areas of expertise and authority to avoid duplication with the Corps and other agencies and to provide the Corps with a sound basis for making permit decisions. The Federal resource agencies should not submit comments that attempt to interpret the Corps regulations or for the purposes of section 404(a) make determinations concerning compliance with the Section 404(b)(1) Guidelines. Pursuant to its authority under Section 404(b)(1) of the CWA, the EPA may provide comments to the Corps identifying its views regarding compliance with the Guidelines. While the Corps will fully consider and utilize agency comments, the final decision regarding the permit application, including a determination of compliance with the Guidelines, rests solely with the Corps.

5. *Pre-Application Consultation:* (a) To provide potential applicants with the maximum degree of relevant information at an early phase of project planning, the Corps will increase its efforts to encourage pre-application consultations in accordance with regulations at 33 CFR 325.1(b). Furthermore, while encouraging pre-application consultation, the Corps will emphasize the need for early consultation concerning mitigation requirements, if impacts to aquatic resources may occur. The Corps is responsible for initiating, coordinating, and conducting pre-application consultations and other discussions and meetings with applicants regarding Department of the Army permits. This may not apply in instances where the consultation is associated with the review of a separate permit or license required from another Federal agency (e.g., the Federal Energy Regulatory Commission or the Nuclear Regulatory Commission) or in situations where resource agencies perform work for others outside the context of a specific Department of the Army permit application (e.g., the Conservation Reserve Program and technical assistance to applicants of Federal grants).

(b) For those pre-application consultations involving activities that may result in impacts to aquatic resources, the Corps will provide EPA, FWS, NMFS (as appropriate), and other appropriate Federal and State agencies, a reasonable opportunity to participate in the pre-application process. The invited agencies will participate to the maximum extent possible in the pre-application consultation, since this is generally the best time to consider alternatives for avoiding or reducing adverse impacts. To the extent practical, the Corps and the Federal resource agencies will develop local procedures (e.g., teleconferencing) to promote reasonable and effective pre-application consultations within the logistical constraints of all affected parties.

6. *Applications for Individual Permits:* (a) The Corps is responsible for determining the need for, and the coordination of, interagency meetings, requests for information, and other interactions between permit applicants and the Federal Government. In this regard, Federal resource agencies will contact the Corps to discuss and coordinate any additional need for information from the applicant. The Corps will cooperate with the Federal resource agencies to ensure, to the extent practical, that information necessary for the agencies to carry out their responsibilities is obtained. If it is determined by the Corps that an applicant meeting is necessary for the exchange of information with a Federal resource agency and the Corps chooses not to participate in such a meeting, the Federal resource agency will apprise the Corps, generally in writing, of that agency's discussions with the applicant. Notwithstanding such meetings, the Corps is solely responsible for permit requirements, including mitigation and other conditions—the Federal resource agencies must not represent their views as regulatory requirements. In circumstances where the Corps meets with the applicant and develops information that will affect the permit decision, the Corps will apprise the Federal resource agencies of such information.

(b) Consistent with 33 CFR 325, the Corps will ensure that public notices contain sufficient information to facilitate the timely submittal of project-specific comments from the Federal resource agencies. The resource agencies comments will provide specific information and/or data related to the proposed project site. The Corps will fully consider comments regarding the site from a watershed or landscape scale, including an evaluation of potential cumulative and secondary impacts.

(c) The Corps must consider cumulative impacts in reaching permit decisions. In addition to the Corps own expertise and experience, the Corps will fully consider comments from the Federal resource agencies, which can provide valuable information on cumulative impacts. Interested Federal agencies are encouraged to provide periodically to the Corps generic comments and assessments of impacts (outside the context of a specific permit

application) on issues within the agencies' area of expertise.

7. *General Permits:*

(a) The Corps is responsible for proposing potential general permits, assessing impacts of and comments on proposed general permits, and deciding whether to issue general permits. The Corps will consider proposals for general permits from other sources, including the Federal resource agencies, although the final decision regarding the need to propose a general permit rests with the Corps. Other interested Federal agencies should provide comments to the Corps on proposed general permits. These Federal agency comments will be submitted consistent with established agreements and regulations and will focus on the Federal agencies' area(s) of expertise. The Corps will fully consider such agencies' comments in deciding whether to issue general permits, including programmatic general permits.

(b) The Corps is responsible for initiating and conducting meetings that may be necessary in developing and evaluating potential general permits. Any discussions with a State or local Government regarding proposed programmatic general permits will be coordinated through and conducted by the Corps. Prior to issuing a programmatic general permit, the Corps will ensure that the State or local program, by itself or with appropriate conditions, will protect the aquatic environment, including wetlands, to the level required by the section 404 program.

8. This guidance expires 31 December 1997 unless sooner revised or rescinded.

For the Commander:

Arthur E. Williams,

Major General, USA, Director of Civil Works.

Regulatory Guidance Letter (92–2)

RGL 92–2 Date: 26 June 92 Expires: 31 December 95 CECW–OR

Subject: Water Dependency and Cranberry Production

1. Enclosed for implementation is a joint Army Corps of Engineers/Environmental Protection Agency Memorandum to the Field on water dependency and cranberry production. This guidance was developed jointly by the Army Corps of Engineers and the U.S. Environmental Protection Agency.

2. This guidance will expire 31 December 1995 unless sooner revised or rescinded.

For the Director of Civil Works:

John P. Elmore, P.E.,

Chief, Operations, Construction and Readiness Division, Directorate of Civil Works.

Memorandum to the Field

SUBJECT: Water Dependency and Cranberry Production

1. The purpose of this memorandum is to clarify the applicability of the Section 404(b)(1) Guidelines water dependency provisions (40 CFR 230.10(a)) to the cultivation of cranberries, in light of Army Corps of Engineers (Corps) regulations at 33 CFR 323.4(a)(1)(iii)(C)(1) (ii) and (iii), and Environmental Protection Agency (EPA) regulations at 40 CFR 232.3(d)(3)(i) (B) and (C). These sections of the Corps and EPA regulations state, among other things, that cranberries are a wetland crop, and that some discharges associated with cranberry production are considered exempt from regulation under the provisions of Section 404(f) of the Clean Water Act. The characterization of cranberries as a wetland crop has led to inconsistency in determining if cranberry production is a water dependent activity as defined in the Section 404(b)(1) Guidelines (Guidelines).

2. The intent of Corps regulations at 33 CFR 320.4(b) and of the Guidelines is to avoid the unnecessary destruction or alteration of waters of the U.S., including wetlands, and to compensate for the unavoidable loss of such waters. The Guidelines specifically require that ''no discharge of dredged or fill material shall be permitted if there is a practicable alternative to the proposed discharge which would have less adverse impact on the aquatic ecosystem, so long as the alternative does not have other significant adverse environmental consequences'' (see 40 CFR 230.10(a)). Based on this provision, an evaluation is required in every case for use of non-aquatic areas and other aquatic sites that would result in less adverse impact to the aquatic ecosystem, irrespective of whether the discharge site is a special aquatic site or whether the activity associated with the discharge is water dependent. A permit cannot be issued, therefore, in circumstances where an environmentally preferable practicable alternative for the proposed discharge exists (except as provided for under Section 404(b)(2)).

3. For proposed discharges into wetlands and other ''special aquatic sites,'' the Guidelines alternatives analysis requirement further considers whether the activity associated with the proposed discharge is ''water dependent''. The Guidelines define water dependency in terms of an activity requiring access or proximity to or siting within a special aquatic site to fulfill its basic project purpose. Special aquatic sites (as defined in 40 CFR 230.40–230.45) are: (1) sanctuaries and refuges; (2) wetlands; (3) mud flats; (4) vegetated shallows; (5) coral reefs; and (6) riffle and pool complexes. If an activity is determined not to be water dependent, the Guidelines establish the following two presumptions (40 CFR 230.10(a)(3)) that the applicant is required to rebut before satisfying the alternatives analysis requirements:

a. that practicable alternatives that do not involve special aquatic sites are presumed to be available; and,

b. that all practicable alternatives to the proposed discharge which do not involve a discharge into a special aquatic site are presumed to have less adverse impact on the aquatic ecosystem.

It is the responsibility of the applicant to clearly rebut these presumptions in order to demonstrate compliance with the Guidelines alternatives test.

4. If an activity is determined to be water dependent, the rebuttable presumptions stated in paragraph 3 of this memorandum do not apply. However, the proposed discharge, whether or not it is associated with a water dependent activity, must represent the least environmentally damaging practicable alternative in order to comply with the alternatives analysis requirement of the Guidelines as described in paragraph 2 of this memorandum.

5. As previously indicated, Corps and EPA regulations consider cranberries as a wetland crop species. This characterization of cranberries as a wetland crop species is based primarily on the listing of cranberries as an obligate hydrophyte in the National List of Plant Species That Occur in Wetlands (U.S. Fish and Wildlife Service Biological Report 88 (26.1–26.13)) and the fact that cranberries must be grown in wetlands or areas altered to create a wetland environment. Therefore, the Corps and EPA consider the construction of cranberry beds, including associated dikes and water control structures associated with dikes (i.e., headgates, weirs, drop inlet structures), to be a water dependent activity. Consequently, discharges directly associated with cranberry bed construction are not subject to the presumptions applicable to non-water dependent activities discussed in paragraph 3 of this memorandum. However, consistent with the requirements of Section 230.10(a), the proposed discharge must represent the least environmentally damaging practicable alternative, after considering aquatic and non-aquatic alternatives as appropriate. To be considered practicable, an alternative must be available and capable of being done after taking into consideration cost, existing technology, and logistics in light of overall project purposes. For commercial cranberry cultivation, practicable alternatives may include upland sites with proper characteristics for creating the necessary conditions to grow cranberries. Factors that must be considered in making a determination of whether or not upland alternatives are practicable include soil pH, topography, soil permeability, depth to bedrock, depth to seasonal high water table, adjacent land uses, water supply, and, for expansion of existing cranberry operations, proximity to existing cranberry farms. EPA Regions and Corps Districts are encouraged to work together with local cranberry growers to refine these factors to reflect their regional conditions.

6. In contrast, the following activities often associated with the cultivation and harvesting of cranberries are not considered water dependent: construction of roads, ditches, reservoirs, and pump houses that are used during the cultivation of cranberries, and construction of secondary support facilities for shipping, storage, packaging, parking, etc. Therefore, the rebuttable practicable alternatives presumptions discussed in paragraph 3 of this memorandum apply to the discharges associated with these non-water dependent activities. However, since determinations of practicability under the Guidelines includes consideration of cost, technical, and logistics factors, determining the availability of practicable alternatives to discharges associated with these non-water dependent activities must involve consideration of the need of an alternative to be proximate to the cranberry bed in order to achieve the basic project purpose of cranberry cultivation.

Once it has been determined that the location of the cranberry bed, including associated dikes, and water control structures, represents the least environmentally damaging practicable alternative, practicable alternatives for maintenance roads, ditches, reservoirs and pump houses will generally be limited to the bed itself and the area in the vicinity of the actual bed. For example, the bed dikes may be the only practicable alternative for location of maintenance roads. When practicable alternatives cannot be identified within such geographic constraints, the applicant must minimize the impacts of the roads, reservoirs, etc., to the maximum extent practicable.

7. During review of applications for discharges associated with cranberry cultivation, it is important to reiterate that proposed discharges must also comply with the other requirements of the Guidelines (i.e., 40 CFR 230.10 (b), (c) and (d)). In addition, evaluations of all discharges, whether or not the proposed discharge is associated with a water dependent activity, must comply with the provisions of the National Environmental Policy Act, including an investigation of alternatives to the proposed discharge. Further, applications for discharges associated with cranberry cultivation will continue to be evaluated in accordance with current Corps and EPA policy and practice concerning mitigation, cumulative impact analysis, and public interest review factors.

8. This guidance expires 31 December 1995 unless sooner revised or rescinded.

For the Director of Civil Works:

Robert H. Wayland III,

Director, Office of Wetlands, Oceans, and Watersheds, U.S. Environmental Protection Agency.

John P. Elmore,

Chief, Operations, Construction and Readiness Division, Directorate of Civil Works.

Regulatory Guidance Letter (92–3)

RGL 92–3 DATE: 19 Aug 92 EXPIRES: 31 Dec 97

SUBJECT: Extension of Regulatory Guidance Letter (RGL) 86–10

RGL 86–10, subject: ''Special Area Management Plans (SAMP's)'' is extended until 31 December 1997 unless sooner revised or rescinded.

For the Director of Civil Works:

John P. Elmore,

Chief, Operations, Construction and Readiness Division, Directorate of Civil Works.

RGL 86–10

Special Area Management Plans (SAMP's)

Issued 10/2/86 Expired 12/31/88

1. The 1980 Amendments to the Coastal Zone Management Act define the SAMP process as ''a comprehensive plan providing for natural resource protection and reasonable coastal-dependent economic growth containing a detailed and comprehensive statement of policies, standards and criteria to guide public and private uses of lands and waters; and mechanisms for timely implementation in specific geographic areas within the coastal zone.'' This process of collaborative interagency planning within a geographic area of special sensitivity is just as applicable in non-coastal areas.

2. A good SAMP reduces the problems associated with the traditional case-by-case review. Developmental interests can plan with predictability and environmental interests are assured that individual and cumulative impacts are analyzed in the context of broad ecosystem needs.

3. Because SAMP's are very labor intensive, the following ingredients should usually exist before a district engineer becomes involved in a SAMP:

a. The area should be environmentally sensitive and under strong developmental pressure.

b. There should be a sponsoring local agency to ensure that the plan fully reflects local needs and interests.

c. Ideally there should be full public involvement in the planning and development process.

d. All parties must express a willingness at the outset to conclude the SAMP process with a definitive regulatory product (see next paragraph).

4. An ideal SAMP would conclude with two products: 1) appropriate local/State approvals and a Corps general permit (GP) or abbreviated processing procedure (APP) for activities in specifically defined situations; and 2) a local/State restriction and/or an Environmental Protection Agency (EPA) 404(c) restriction (preferably both) for undesirable activities. An individual permit review may be conducted for activities that do not fall into either category above. However, it should represent a small number of the total cases addressed by the SAMP. We recognize that an ideal SAMP is difficult to achieve, and, therefore, it is intended to represent an upper limit rather than an absolute requirement.

5. Do not assume that an environmental impact statement is automatically required to develop a SAMP.

6. EPA's program for advance identification of disposal areas found at 40 CFR 230.80 can be integrated into a SAMP process.

7. In accordance with this guidance, district engineers are encouraged to participate in development of SAMP's. However, since development of a SAMP can require a considerable investment of time, resources, and money, the SAMP process should be entered only if it is likely to result in a definitive regulatory product as defined in paragraph 4. above.

8. This guidance expires 31 December 1988 unless sooner revised or rescinded.

For the Chief of Engineers:

Peter J. Offringa,

Brigadier General, USA, Deputy Director of Civil Works.

Regulatory Guidance Letter (RGL–92–4)

RGL 92–4 DATE: 14 Sep 1992 EXPIRES: 21 Jan 1997

SUBJECT: Section 401 Water Quality Certification and Coastal Zone Management Act Conditions for Nationwide Permits

1. The purpose of this Regulatory Guidance Letter (RGL) is to provide additional guidance and clarification for divisions and districts involved in developing acceptable conditions under the Section 401 Water Quality Certifications and Coastal Zone Management Act (CZM) concurrences for the Nationwide Permit (NWP) Program. This RGL represents a clarification of 330.4(c) (2) and (3) and 330.4(d) (2) and (3), concerning when NWP Section 401 and CZM conditions should not be accepted and thus treated as a denial without prejudice. The principles contained in this RGL also apply to 401 certification and CZM concurrence conditions associated with individual permits and regional general permits.

2. Corps divisions and districts should work closely and cooperatively with the States to develop reasonable 401 and CZM conditions. All involved parties should participate in achieving the purpose of the NWP program, which is to provide the public with an expeditious permitting process while, at the same time, safeguarding the environment by only authorizing activities which result in no more than minimal individual and cumulative adverse effects. When a State certifying agency or CZM agency proposes conditions, the division engineer is responsible for determining whether 401 Water Quality Certification or CZM concurrence conditions are acceptable and comply with the provisions of 33 CFR 325.4. In most cases it is expected that the conditions will be acceptable and the division engineer shall recognize these conditions as regional conditions of the NWP's.

3. *Unacceptable Conditions:* There will be cases when certain conditions will clearly be unacceptable and those conditioned 401 certifications or CZM concurrences shall be considered administratively denied. Consequently, authorization for an activity which meets the terms and conditions of such NWP(s) is denied without prejudice.

a. Illegal conditions are clearly unacceptable. Illegal conditions would result in violation of a law or regulation, or would require an illegal action. For example, a condition which would require an applicant to obtain a 401 certification or CZM concurrence, where the State has previously denied certification or concurrence, prior to submitting a predischarge notification (PDN) to the Corps in accordance with PDN procedures, would violate the Corps regulation at 33 CFR 330.4(c)(6). Another example would be a case where an applicant would be required, through a condition, to apply for an individual Department of the Army permit. Another example is a requirement by the State agency to utilize the 1989 Federal Wetland Delineation Manual to establish jurisdiction.

b. As a general rule, a condition that would require the Corps or another Federal agency to take an action which we would not otherwise take and do not choose to take, would be clearly unacceptable. For example, where the certification or concurrence is conditioned to require a PDN, where the proposed activity did not previously require a PDN, the Corps should not accept that condition, since implicitly the Corps would

have to accept and utilize the PDN. Another example would be a situation where the U.S. Fish and Wildlife Service is required, through a condition, to provide any type of formal review or approval.

c. Section 401 or CZM conditions which provide for limits (quantities, dimensions, etc.) different from those imposed by the NWP do not change the NWP limits.

1. Higher limits are clearly not acceptable. For example, increasing NWP 18 for minor discharges from 10 to 50 cubic yards would not be acceptable. Such conditions would confuse the regulated public and could contribute to violations.

2. Lower limits are acceptable but have the effect of denial without prejudice of those activities that are higher than the Section 401 or CZM condition limit but within the NWP limit. Thus, if an applicant obtains an individual 401 water quality certification and/or CZM concurrence for work within the limits of an NWP where the State had denied certification and/or CZM concurrence, then the activity could be authorized by the NWP.

d. A condition which would delete, modify, or reduce NWP conditions would be clearly unacceptable.

4. *Discretionary Enforcement:* The initiation of enforcement actions by the Corps, whether directed at unauthorized activities or to ensure compliance with permit conditions, is discretionary. The district engineer will consider the following situations when determining whether to enforce 401 and/or CZM conditions.

a. Unenforceable Conditions—Some conditions that a State may propose will not be reasonably enforceable by the Corps (e.g., a condition requiring compliance with the specific terms of another State permit). Provided such conditions do not violate paragraph 3 above, the conditions will be accepted by the Corps as regionally conditions. However, limited Corps resources should not be utilized in an attempt to enforce compliance with 401 or CZM conditions which the district engineer believes to be essentially unenforceable, or of low enforcement priority for limited Corps resources.

b. Enforceable Conditions—Some other conditions proposed by a State may be considered enforceable, (e.g., a condition requiring the applicant to obtain another State permit), but of law priority for Federal enforcement, since the Federal Government would not have required those conditions but for the State's requirement. Furthermore, the Corps will generally not enforce such State-imposed conditions except in very unusual cases, due to our limited personnel and financial resources.

5. *NWP Verification and PDN Responses:* In response to NWP verification requests and PDN's, district engineers should utilize the same paragraphs presented below. This language should be used where conditional 401 certification or CZM concurrence has been issued. This specifically addresses situations when the conditions included with the certification or concurrence are such that the district engineer determines they are unenforceable or the district engineer cannot clearly determine compliance with the 401/CZM conditions (see 4.a.).

''Based on our review of your proposal to [describe proposal], we have determined that the activity qualifies for the nationwide permit authorization [insert NWP No(s.)], subject to the terms and conditions of the permit.

[Insert paragraph on any Corps required activity-specific conditions].

Enclosed you will find a copy of the Section 401 Water Quality Certification and/or Coastal Zone Management special conditions, which are conditions of your authorization under Nationwide Permit [insert NWP No(s.)]. If you have questions concerning compliance with the conditions of the 401 certification or Coastal Zone Management concurrence, you should contact the [insert appropriate State agency].

If you do not or cannot comply with these State Section 401 certification conditions and/or CZM conditions, then in order to be authorized by this Nationwide Permit, you must furnish this office with an individual 401 certification or Coastal Zone Management concurrence from [insert appropriate State agency], or a copy of the application to the State for such certification or concurrence, [insert ''60 days'' for Section 401 water quality certification, unless another reasonable period of time has been determined pursuant to 33 CFR 330.4(c)(6), or insert ''six months'' for CZM concurrence] after you submit it to the State agency.''

6. This guidance expires 21 January 1997 unless sooner revised or rescinded.

For the Director of Civil Works:

John P. Elmore, P.E.,

Chief, Operations, Construction and Readiness Division, Directorate of Civil Works.

Regulatory Guidance Letter (RGL 92–5)

RGL 92–5 Date: 29 October 1992, Expires: 31 December 1997

Subject: Alternatives Analysis Under the Section 404(b)(1) Guidelines for Projects Subject to Modification Under the Clean Air Act.

1. Enclosed for implementation is a joint Army Corps of Engineers/Environmental Protection Agency Memorandum to the Field on alternatives analysis for existing power plants that must be modified to meet requirements of the 1990 Clean Air Act. This guidance was developed jointly by the Corps and EPA.

2. This guidance expires 31 December 1997 unless sooner revised or rescinded.

For the Director of Civil Works:

John P. Elmore, P.E.,

Chief, Operations, Construction and Readiness Division, Directorate of Civil Works.

Encl

EPA/Corps Joint Memorandum for the Field

Subject: Alternatives Analysis under the Section 404(b)(1) Guidelines for Projects Subject to Modification Under the Clean Air Act.

1. The 1990 Clean Air Act (CAA) amendments require most electric generating plants to reduce emissions of sulfur dioxide in phases beginning in 1995 and requiring full compliance by 2010. The congressional endorsement of the industry's ability to select the most effective compliance method (e.g., sulfur dioxide scrubbers, low sulfur coal, or other methods) recognizes the expertise of the industry in these cases and is a fundamental element in the CAA market-based pollution control program. Given the need for cooling water, a substantial number of electric power generating plants are located adjacent, or in close proximity, to waters of the United States, including wetlands. Depending on the method chosen by the plants to reduce emissions, we expect that these facilities will be applying for Clean Water Act Section 404 permits for certain proposed activities.

2. The analysis and regulation under Section 404 of the Clean Water Act of activities in waters of the United States conducted by specific power plants to comply with the 1990 Clean Air Act amendments must ensure protection of the aquatic environment consistent with the requirements of the Clean Water Act. The review of applications for such projects will fully consider, consistent with requirements under the Section 404(b)(1) Guidelines, all practicable alternatives including non-aquatic alternatives, for proposed discharges associated with the method selected by the utility to comply with the 1990 Clean Air Act amendments. For the purposes of the Section 404(b)(1) Guidelines analysis, the project purpose will be that pollutant reduction method selected by the permit applicant.

3. For example, a utility may have decided to install sulfur dioxide scrubbers on an existing power plant in order to meet the new 1990 Clean Air Act standards. The proposed construction of the scrubbers, treatment ponds and a barge unloading facility could impact wetlands. In this case, the Section 404 review would evaluate practicable alternative locations and configurations for the scrubbers, ponds and of the docking facilities. The analysis will also consider practicable alternatives which satisfy the project purpose (i.e., installing scrubbers) but which have a less adverse impact on the aquatic environment or do not involve discharges into waters of the United States. However, in order to best effectuate Congressional intent reflected in the CAA that electric utilities retain flexibility to reduce sulfur dioxide emissions in the most cost effective manner, the Section 404 review should not evaluate alternative methods of complying with the Clean Air Act standards not selected by the applicant (e.g., in this example use of low sulfur coal).

4. In evaluating the scope of practicable alternatives which satisfy the project purpose (e.g., constructing additional scrubber capacity), the alternatives analysis should not be influenced by the possibility that, based on a conclusion that practicable upland alternatives are available to the applicant, the project proponent may decide to pursue other options for meeting Clean Air Act requirements. Continuing the above example, a Corps determination that practicable upland alternatives are available for scrubber waste disposal should not be affected by the possibility that an applicant may subsequently decide to select a different method for meeting the Clean Air Act

standards (e.g., use of low sulfur coal that reduces waste generated by scrubbers).

5. The Corps and EPA will also recognize the tight time-frames under which the industry must meet these new air quality standards.

Robert H. Wayland,

Director, Office of Wetlands, Oceans and Watersheds.

John P. Elmore,

Chief, Operations, Construction and Readiness Division, Directorate of Civil Works.

Regulatory Guidance Letter (RGL 93–1)

RGL 93–1 Issued: April 20, 1993, Expires: December 31, 1998

CECW–OR

Subject: Provisional Permits

1. *Purpose:* The purpose of this guidance is to establish a process that clarifies for applicants when the U.S. Army Corps of Engineers has completed its evaluation and at what point the applicant should contact the State concerning the status of the Section 401 Water Quality Certification and/or Coastal Zone Management (CZM) consistency concurrence. This process also allows for more accurate measurement of the total length of time spent by the Corps in evaluating permit applications (i.e., from receipt of a complete application until the Corps reaches a permit decision). For verification of authorization of activities under regional general permits, the Corps will use the appropriate nationwide permit procedures at 33 CFR 330.6.

2. *Background:* a. A Department of the Army permit involving a discharge of dredged or fill material cannot be issued until a State Section 401 Water Quality Certification has been issued or waived. Also, a Department of the Army permit cannot be issued for an activity within a State with a federally-approved Coastal Management Program when that activity that would occur within, or outside, a State's coastal zone will affect land or water uses or natural resources of the State's coastal zone, until the State concurs with the applicant's consistency determination, or concurrence is presumed. In many cases, the Corps completes its review before the State Section 401 Water Quality Certification or CZM concurrence requirements have been satisfied. In such cases, applicants and the public are often confused regarding who to deal with regarding resolution of any State issues.

b. The ''provisional permit'' procedures described below will facilitate a formal communication between the Corps and the applicant to clearly indicate that the applicant should be in contact with the appropriate State agencies to satisfy the State 401 Water Quality Certification or CZM concurrence requirements. In addition, the procedures will allow for a more accurate measurement of the Corps permit evaluation time.

3. *Provisional Permit Procedures:* The provisional permit procedures are optional and may only be used in those cases where: (i) The District Engineer (DE) has made a provisional individual permit decision that an individual permit should be issued, and, (ii) the only action(s) preventing the issuance of that permit is that the State has not issued a required Section 401 Water Quality Certification (or waiver has not occurred) or the State has not concurred in the applicant's CZM consistency determination (or there is not a presumed concurrence). In such cases, the DE may, using these optional procedures, send a provisional permit to the applicant.

a. First, the DE will prepare and sign the provisional permit decision document. Then the provisional permit will be sent to the applicant by transmittal letter. (The sample transmittal letter at enclosure 1 contains the minimum information that must be provided.)

b. Next, the applicant would obtain the Section 401 Water Quality Certification (or waiver) and/or CZM consistency concurrence (or presumed concurrence). Then the applicant would sign the provisional permit and return it to the DE along with the appropriate fee and the Section 401 Water Quality Certification (or proof of waiver) and/or the CZM consistency concurrence (or proof of presumed concurrence).

c. Finally, the Corps would attach any Section 401 Water Quality Certification and/or CZM consistency concurrence to the provisional permit, then sign the provisional permit (which then becomes the issued final permit), and forward the permit to the applicant.

d. This is the same basic process as the normal standard permit transmittal process except that the applicant is sent an unsigned permit (i.e., a provisional permit) prior to obtaining the Section 401 Water Quality Certification (or waiver) and/or CZM consistency concurrence (or presumed concurrence). (See enclosure 2.) A permit can not be issued (i.e., signed by the Corps) until the Section 401 and CZM requirements are satisfied.

4. *Provisional Permit:* A provisional permit is a standard permit document with a cover sheet. The cover sheet must clearly indicate the following: that a provisional permit is enclosed, that the applicant must obtain the Section 401 Water Quality Certification or CZM concurrence from the State, that these documents must be sent to the Corps along with the provisional permit signed by the applicant, and that the Corps will issue the permit upon receipt of these materials. The issued permit is the provisional permit signed by the applicant and the Corps. The provisional permit must contain a statement indicating that the applicant is required to comply with the Section 401 Water Quality Certification, including any conditions, and/or the CZM consistency concurrence, including any conditions. At enclosure 3 is a sample cover sheet for the provisional permit.

5. *Provisional Permit Decision:* The DE may reach a final decision that a permit should be issued provided that the State issues a Section 401 Water Quality Certification and/or a CZM concurrence. In order to reach such a decision the DE must complete the normal standard permit evaluation process, prepare and sign a decision document, and prepare a standard permit, including any conditions or mitigation (i.e., a provisional permit). The decision document must include a statement that the DE has determined that the permit will be issued if the State issues a Section 401 Water Quality Certification or waiver and/or a CZM concurrence, or presumed concurrence. The standard permit will not contain a condition that requires or provides for the applicant to obtain a Section 401 Water Quality Certification and/or CZM concurrence. Once the decision document is signed, the applicant has the right to a DA permit if the State issues a Section 401 Water Quality Certification or waiver and/or a CZM concurrence, or if concurrence is presumed. Once the decision document is signed, the permittee's right to proceed can only be changed by using the modification, suspension and revocation procedures of 33 CFR 325.7, unless the State denies the Section 401 Water Quality Certification or nonconcurs with the applicant's CZM consistency determination.

6. *Enforcement:* In some cases, applicants might proceed with the project upon receipt of the provisional permit. The provisional permit is not a valid permit. In such cases, the Corps has a discretionary enforcement action to consider and should proceed as the DE determines to be appropriate. This occurs on occasion during the standard permit transmittal process. Since the Corps is not changing the normal process of sending unsigned permits to the applicant for signature, there should not be an increase in the occurrence of such unauthorized activities.

7. *Modification:* a. In most cases the Section 401 Water Quality Certification, including conditions, and/or CZM consistency concurrence, including conditions, will be consistent with the provisional permit. In such cases, the DE will simply sign the final permit and enclose the 401 water quality certification and/or CZM consistency concurrence with the final permit (i.e., the signed provisional permit).

b. In a few cases such State approval may necessitate modifications to the Corps preliminary permit decision. Such modifications will be processed in accordance with 33 CFR 325.7.

(1) When the modifications are minor and the DE agrees to such modifications, then a supplement to the provisional decision document may be prepared, as appropriate, and the permit issued with such modifications. (This should usually be done by enclosing the State 401 Water Quality Certification and/or CZM consistency concurrence to the permit, but in a few cases may require a revision to the permit document itself.)

(2) When the modification results in substantial change or measurable increase in adverse impacts or the Corps does not initially agree with the change, then the modification will be processed and counted as a separate permit action for reporting purposes. This may require a new public notice or additional coordination with appropriate Federal and/or state agencies. The provisional decision document will be supplemented or may be completely rewritten, as necessary.

8. *Denial:* If the State denies the Section 401 Water Quality Certification and/or the State nonconcurs with the applicant's CZM

consistency determination, then the Corps permit is denied without prejudice.

9. This guidance expires 31 December 1998 unless sooner revised or rescinded.

For the Director of Civil Works:

John P. Elmore, P.E.,

Chief, Operations, Construction and Readiness Division, Directorate of Civil Works.

3 Encls

Sample Provisional Permit Transmittal Letter

Dear _____: We have completed our review of your permit application identified as [File No., appl. name, etc.] for the following proposed work:

_____

_____

_____

near/in/at _____. _____

Enclosed is a ''PROVISIONAL PERMIT.'' The provisional permit is NOT VALID and does not authorize you to do your work. The provisional permit describes the work that will be authorized, and the General and Special Conditions [if any] which will be placed on your final Department of the Army (DA) permit, if the State of _____ Water Quality Certification and/or Coastal Zone Management (CZM) consistency requirements are satisfied as described below. No work is to be performed in the waterway or adjacent wetlands until you have received a validated copy of the DA permit.

By Federal law no DA permit can be issued until a State Section 401 Water Quality Certification has been issued or has been waived and/or the State has concurred with a permit applicant's CZM consistency determination or concurrence has been presumed. As of this date the [State 401 certification agency] has not issued a Section 401 Water Quality Certification for your proposed work. If the [State 401 certification agency] fails or refuses to act by [date 401 certification must be issued] the Section 401 Water Quality Certification requirement will be automatically waived. Also, as of this date the [State CZM agency] has not concurred with your CZM consistency determination. If the State does not act by [six months from receipt by the State of the applicant's CZM consistency determination] then concurrence with your CZM consistency determination will automatically be presumed.

Conditions of the State Section 401 Water Quality Certification and/or the State CZM concurrence will become conditions to the final DA permit. Should the State's action on the required certification or concurrence preclude validation of the provisional permit in its current form, a modification to the provisional permit will be evaluated and you will be notified as appropriate. Substantial changes may require a new permit evaluation process, including issuing a new public notice.

Enclosure 1

Final Permit Actions

Normal Permit Process

1. Corps completes permit decision, and state 401/CZM issued/waived
2. Corps sends unsigned permit to applicant
3. Applicant signs permit and returns with fee
4. Corps signs permit

Draft Permit Process

1. Corps completes permit decision, but state 401/CZM not complete
2. Corps sends draft permit to applicant
3. State 401/CZM issued waived
4. Applicant signs permit and returns with fee and 401/CZM action
5. Corps reviews 401/CZM action and signs permit

1. The signed draft permit with the attached 401/CZM action is to be treated as the applicant's request for a permit subject to any 401/CZM certification/concurrence including any conditions.

2. If the 401/CZM action results in a modification to the draft permit, then step 4. would be treated as a request for such modification and if we agree with the modification, then the permit would be issued with the modification and the decision document supplemented, as appropriate. If the Corps does not initially agree with the modification, or it involves a substantial change or measurable increase in adverse impacts, then the modification would be processed as a separate permit action for reporting purposes.

Enclosure 2

Once the State has issued the required Section 401 Water Quality Certification and/or concurred with your CZM consistency determination or the dates above have passed without the State acting, and you agree to the terms and conditions of the provisional permit, you should sign and date both copies and return them to us [along with your $100.00/$10.00 permit fee]. Your DA permit will not be valid until we have returned a copy to you bearing both your signature and the signature of the appropriate Corps official.

If the State denies the required Section 401 Water Quality Certification and/or nonconcurs with your CZM consistency determination, then the DA permit is denied without prejudice. If you should subsequently obtain a Section 401 Water Quality Certification and/or a CZM consistency determination concurrence, you should contact this office to determine how to proceed with your permit application.

If you have any questions concerning your State Section 401 Water Quality Certification, please contact (State 401 certification contact)

If you have any questions concerning the CZM consistency determination, please contact (State CZM contact)

If you have any other questions concerning your application for a DA permit, please contact [Corps contact] at [Corps contact telephone number].

Provisional Permit—Not Valid—Do Not Begin Work

This PROVISIONAL PERMIT is NOT VALID until:

(1) You obtain: _____ a Section 401 Water Quality Certification from State Agency).

_____ a Coastal Zone Consistency determination concurrence from (State Agency).

(2) You sign and return the enclosed provisional permit with the State Section 401 Water Quality Certification and/or CZM concurrence and the appropriate permit fee as indicated below:

_____ $10.00 _____ $100.00 _____ No fee required.

(3) The Corps signs the permit and returns it to you. Your permit is denied without prejudice, if the State denies your Section 401 Water Quality Certification and/or nonconcurs with your Coastal Zone Management consistency determination.

Do Not Begin Work

Regulatory Guidance Letter, (RGL 93–2)

RGL 93–2 Date: 23 August 1993, Expires: 31 December 1998

Subject: Guidance on Flexibility of the 404(b)(1) Guidelines and Mitigation Banking.

1. Enclosed are two guidance documents signed by the Office of the Assistant Secretary of the Army (Civil Works) and the Environmental Protection Agency. The first document provides guidance on the flexibility that the U.S. Army Corps of Engineers should be utilizing when making determinations of compliance with the Section 404(b)(1) Guidelines, particularly with regard to the alternatives analysis. The second document provides guidance on the use of mitigation banks as a means of providing compensatory mitigation for Corps regulatory decisions.

2. Both enclosed guidance documents should be implemented immediately. These guidance documents constitute an important aspect of the President's plan for protecting the Nation's wetlands, ''Protecting America's Wetlands: A Fair, Flexible and Effective Approach'' (published on 24 August 1993).

3. This guidance expires 31 December 1998 unless sooner revised or rescinded.

For the Director of Civil Works:

John P. Elmore, P.E.,

Chief, Operations, Construction and Readiness Division, Directorate of Civil Works.

2 Encls

Memorandum to the Field

Subject: Appropriate Level of Analysis Required for Evaluating Compliance With the Section 404(b)(1) Guidelines Alternatives Requirements

1. Purpose: The purpose of this memorandum is to clarify the appropriate level of analysis required for evaluating compliance with the Clean Water Act Section 404(b)(1) Guidelines' (Guidelines) requirements for consideration of alternatives. 40 CFR 230.10(a). Specifically, this memorandum describes the flexibility afforded by the Guidelines to make

regulatory decisions based on the relative severity of the environmental impact of proposed discharges of dredged or fill material into waters of the United States.

2. Background: The Guidelines are the substantive environmental standards by which all Section 404 permit applications are evaluated. The Guidelines, which are binding regulations, were published by the Environmental Protection Agency at 40 CFR Part 230 on December 24, 1980. The fundamental precept of the Guidelines is that discharges of dredged or fill material into waters of the United States, including wetlands, should not occur unless it can be demonstrated that such discharges, either individually of cumulatively, will not result in unacceptable adverse effects on the aquatic ecosystem. The Guidelines specifically require that ''no discharge of dredged or fill material shall be permitted if there is a practicable alternative to the proposed discharge which would have less adverse impact on the aquatic ecosystem, so long as the alternative does not have other significant adverse environmental consequences.'' 40 CFR 230.10(a). Based on this provision, the applicant is required in every case (irrespective of whether the discharge site is a special aquatic site or whether the activity associated with the discharge is water dependent) to evaluate opportunities for use of non-aquatic areas and other aquatic sites that would result in less adverse impact on the aquatic ecosystem. A permit cannot be issued, therefore, in circumstances where a less environmentally damaging practicable alternative for the proposed discharge exists (except as provided for under Section 404(b)(2)).

3. Discussion: The Guidelines are, as noted above, binding regulations. It is important to recognize, however, that this regulatory status does not limit the inherent flexibility provided in the Guidelines for implementing these provisions. The preamble to the Guidelines is very clear in this regard:

Of course, as the regulation itself makes clear, a certain amount of flexibility is still intended. For example, while the ultimate conditions of compliance are ''regulatory'', the Guidelines allow some room for judgment in determining what must be done to arrive at a conclusion that those conditions have or have not been met.

Guidelines Preamble, ''Regulation versus Guidelines'', 45 **Federal Register** 85336 (December 24, 1980).

Notwithstanding this flexibility, the record must contain sufficient information to demonstrate that the proposed discharge complies with the requirements of Section 230.10(a) of the Guidelines. The amount of information needed to make such a determination and the level of scrutiny required by the Guidelines is commensurate with the severity of the environmental impact (as determined by the functions of the aquatic resource and the nature of the proposed activity) and the scope/cost of the project.

a. Analysis Associated With Minor Impacts

The Guidelines do not contemplate that the same intensity of analysis will be required for all types of projects but instead envision a correlation between the scope of the evaluation and the potential extent of adverse impacts on the aquatic environment. The introduction to Section 230.10(a) recognizes that the level of analysis required may vary with the nature and complexity of each individual case:

Although all requirements in § 230.10 must be met, the compliance evaluation procedures will vary to reflect the seriousness of the potential for adverse impacts on the aquatic ecosystems posed by specific dredged or fill material discharge activities.

40 CFR 230.10

Similarly, Section 230.6 (''Adaptability'') makes clear that the Guidelines: allow evaluation and documentation for a variety of activities, ranging from those with large, complex impacts on the aquatic environment to those for which the impact is likely to be innocuous. It is unlikely that the Guidelines will apply in their entirety to any one activity, no matter how complex. It is anticipated that substantial numbers of permit applications will be for minor, routine activities that have little, if any, potential for significant degradation of the aquatic environment. *It generally is not intended or expected that extensive testing, evaluation or analysis will be needed to make findings of compliance in such routine cases.*

40 CFR 230.6(9) (emphasis added)

Section 230.6 also emphasizes that when making determinations of compliance with the Guidelines, users: must recognize the different levels of effort that should be associated with varying degrees of impact and require or prepare commensurate documentation. *The level of documentation should reflect the significance and complexity of the discharge activity.*

40 CFR 230.6(b) (emphasis added)

Consequently, the Guidelines clearly afford flexibility to adjust the stringency of the alternatives review for projects that would have only minor impacts. Minor impacts are associated with activities that generally would have little potential to degrade the aquatic environment and include one, and frequently more, of the following characteristics: Are located in aquatic resources of limited natural function; are small in size and cause little direct impact; have little potential for secondary or cumulative impacts; or cause only temporary impacts. It is important to recognize, however, that in some circumstances even small or temporary fills result in substantial impacts, and that in such cases a more detailed evaluation is necessary. The Corps Districts and EPA Regions will, through the standard permit evaluation process, coordinate with the U.S. Fish and Wildlife Service, National Marine Fisheries Service and other appropriate state and Federal agencies in evaluating the likelihood that adverse impacts would result from a particular proposal. It is not appropriate to consider compensatory mitigation in determining whether a proposed discharge will cause only minor impacts for purposes of the alternatives analysis required by Section 230.10(a).

In reviewing projects that have the potential for only minor impacts on the aquatic environment, Corps and EPA field offices are directed to consider, in coordination with state and Federal resource agencies, the following factors:

(i) Such projects by their nature should not cause or contribute to significant degradation individually or cumulatively. Therefore, it generally should not be necessary to conduct or require detailed analyses to determine compliance with Section 230.10(c).

(ii) Although sufficient information must be developed to determine whether the proposed activity is in fact the least damaging practicable alternative, the Guidelines do not require an elaborate search for practicable alternatives if it is reasonably anticipated that there are only minor differences between the environmental impacts of the proposed activity and potentially practicable alternatives. This decision will be made after consideration of resource agency comments on the proposed project. It often makes sense to examine first whether potential alternatives would result in no identifiable or discernible difference in impact on the aquatic ecosystem. Those alternatives that do not may be eliminated from the analysis since Section 230.10(a) of the Guidelines only prohibits discharges when a practicable alternative exists which would have less adverse impact on the aquatic ecosystem. Because evaluating practicability is generally the more difficult aspect of the alternatives analysis, this approach should save time and effort for both the applicant and the regulatory agencies.[1] By initially focusing the alternatives analysis on the question of impacts on the aquatic ecosystem, it may be possible to limit (or in some instances eliminate altogether) the number of alternatives that have to be evaluated for practicability.

(iii) When it is determined that there is no identifiable or discernible difference in adverse impact on the environment between the applicant's proposed alternative and all other practicable alternatives, then the applicant's alternative is considered as satisfying the requirements of 40 CFR 230.(a).

(iv) Even where a practicable alternative exists that would have less adverse impact on the aquatic ecosystem, the Guidelines allow it to be rejected if it would have ''other significant adverse environmental consequences.'' 40 CFR 230.10(a). As explained in the preamble, this allows for consideration of ''evidence of damages to other ecosystems in deciding whether there is a 'better' alternative.'' Hence, in applying the alternatives analysis required by the Guidelines, it is not appropriate to select an alternative where minor impacts on the aquatic environment are avoided at the cost of substantial impacts to other natural environmental values.

(v) In cases of negligible or trivial impacts (e.g., small discharges to construct individual driveways), it may be possible to conclude that no alternative location could result in

[1] In certain instances, however, it may be easier to examine practicability first. Some projects may be so site-specific (e.g., erosion control, bridge replacement) that no off site alternative could be practicable. In such cases the alternatives analysis may appropriately be limited to onsite options only.

less adverse impact on the aquatic environment within the meaning of the Guidelines. In such cases, it may not be necessary to conduct an offsite alternatives analysis but instead require only any practicable onsite minimization.

This guidance concerns application of the Section 404(b)(1) Guidelines to projects with minor impacts. Projects which may cause more than minor impacts on the aquatic environment, either individually or cumulatively, should be subjected to a proportionately more detailed level of analysis to determine compliance or noncompliance with the Guidelines. Projects which cause substantial impacts, in particular, must be thoroughly evaluated through the standard permit evaluation process to determine compliance with all provisions of the Guidelines.

b. Relationship Between the Scope of Analysis and the Scope/Cost of the Proposed Project

The Guidelines provide the Corps and EPA with discretion for determining the necessary level of analysis to support a conclusion as to whether or not an alternative is practicable. Practicable alternatives are those alternatives that are ''available and capable of being done after taking into consideration cost, existing technology, and logistics in light of overall project purposes.'' 40 CFR 230.10(a)(2). The preamble to the Guidelines provides clarification on how cost is to be considered in the determination of practicability:

Our intent is to consider those alternatives which are *reasonable in terms of the overall scope/cost of the proposed project.* The term economic [for which the term ''cost'' was substituted in the final rule] might be construed to include consideration of the applicant's financial standing, or investment, or market share, a cumbersome inquiry which is not necessarily material to the objectives of the Guidelines.

Guidelines Preamble, ''Alternatives'', 45 FR 85339 (December 24, 1980) (emphasis added).

Therefore, the level of analysis required for determining which alternatives are practicable will vary depending on the type of project proposed. The determination of what constitutes an unreasonable expense should generally consider whether the project cost is substantially greater than the costs normally associated with the particular type of project. Generally, as the scope/cost of the project increases, the level of analysis should also increase. To the extent the Corps obtains information on the costs associated with the project, such information may be considered when making a determination of what constitutes an unreasonable expense.

The preamble to the Guidelines also states that ''[i]f an alleged alternative is unreasonably expensive to the applicant, the alternative is not 'practicable.' '' Guidelines Preamble, ''Economic Factors'', 45 FR 85343 (December 24, 1980). Therefore, to the extent that individual homeowners and small businesses may typically be associated with small projects with minor impacts, the nature of the applicant may also be a relevant consideration in determining what constitutes a practicable alternative. It is important to emphasize, however, that it is not a particular applicant's financial standing that is the primary consideration for determining practicability, but rather characteristics of the project and what constitutes a reasonable expense for these projects that are most relevant to practicability determinations.

4. The burden of proof to demonstrate compliance with the Guidelines rests with the applicant; where insufficient information is provided to determine compliance, the Guidelines require that no permit be issued. 40 CFR 230.12(a)(3)(iv).

5. A reasonable, common sense approach in applying the requirements of the Guidelines' alternatives analysis is fully consistent with sound environmental protection. The Guidelines clearly contemplate that reasonable discretion should be applied based on the nature of the aquatic resources and potential impacts of a proposed activity in determining compliance with the alternatives test. Such an approach encourages effective decisionmaking and fosters a better understanding and enhanced confidence in the Section 404 program.

6. This guidance is consistent with the February 6, 1990 ''Memorandum of Agreement Between the Environmental Protection Agency and the Department of the Army Concerning the Determination of Mitigation under the Clean Water Act Section 404(b)(1) Guidelines.''

Signed 8–23–93

Robert H. Wayland, III,

Director, Office of Wetlands, Oceans, and Watersheds, U.S. Environmental Protection Agency.

Signed 8–23–93

Michael L. Davis,

Office of the Assistant Secretary of the Army (Civil Works), Department of the Army.

Memorandum to the Field

Subject: Establishment and Use of Wetland Mitigation Banks in the Clean Water Act Section 404 Regulatory Program

1. This memorandum provides general guidelines for the establishment and use of wetland mitigation banks in the Clean Water Act Section 404 regulatory program. This memorandum serves as interim guidance pending completion of Phase I by the Corps of Engineers' Institute for Water Resources study on wetland mitigation banking,[2] at which time this guidance will be reviewed and any appropriate revisions will be incorporated into final guidelines.

2. For purposes of this guidance, wetland mitigation banking refers to the restoration, creation, enhancement, and, in exceptional circumstances, preservation of wetlands or other aquatic habitats expressly for the purpose of providing compensatory mitigation in advance of discharges into wetlands permitted under the Section 404 regulatory program. Wetland mitigation banks can have several advantages over individual mitigation projects, some of which are listed below:

(a) Compensatory mitigation can be implemented and functioning in advance of project impacts, thereby reducing temporal losses of wetland functions and uncertainty over whether the mitigation will be successful in offsetting wetland losses.

(b) It may be more ecologically advantageous for maintaining the integrity of the aquatic ecosystem to consolidate compensatory mitigation for impacts to many smaller, isolated or fragmented habitats into a single large parcel or contiguous parcels.

(c) Development of a wetland mitigation bank can bring together financial resources and planning and scientific expertise not practicable to many individual mitigation proposals. This consolidation of resources can increase the potential for the establishment and long-term management of successful mitigation.

(d) Wetland mitigation banking proposals may reduce regulatory uncertainty and provide more cost-effective compensatory mitigation opportunities.

3. The Section 404(b)(1) Guidelines (Guidelines), as clarified by the ''Memorandum of Agreement Concerning the Determination of Mitigation under the Section 404(b)(1) Guidelines'' (Mitigation MOA) signed February 6, 1990, by the Environmental Protection Agency and the Department of the Army, establish a mitigation sequence that is used in the evaluation of individual permit applications. Under this sequence, all appropriate and practicable steps must be undertaken by the applicant to first avoid and then minimize adverse impacts to the aquatic ecosystem. Remaining unavoidable impacts must then be offset through compensatory mitigation to the extent appropriate and practicable. Requirements for compensatory mitigation may be satisfied through the use of wetland mitigation banks, so long as their use is consistent with standard practices for evaluating compensatory mitigation proposals outlined in the Mitigation MOA. It is important to emphasize that, given the mitigation sequence requirements described above, permit applicants should not anticipate that the establishment of, or participation in, a wetland mitigation bank will ultimately lead to a determination of compliance with the Section 404(b)(1) Guidelines without adequate demonstration that impacts associated with the proposed discharge have been avoided and minimized to the extent practicable.

4. The agencies' preference for on-site, in-kind compensatory mitigation does not preclude the use of wetland mitigation banks where it has been determined by the Corps, or other appropriate permitting agency, in coordination with the Federal resource agencies through the standard permit evaluation process, that the use of a particular mitigation bank as compensation for proposed wetland impacts would be appropriate for offsetting impacts to the

[2] The Corps of Engineers Institute for Water Resources, under the authority of Section 307(d) of the Water Resources Development Act of 1990, is undertaking a comprehensive two-year review and evaluation of wetland mitigation banking to assist in the development of a national policy on this issue. The interim summary report documenting the results of the first phase of the study is scheduled for completion in the fall of 1993.

aquatic ecosystem. In making such a determination, careful consideration must be given to wetland functions, landscape position, and affected species populations at both the impact and mitigation bank sites. In addition, compensation for wetland impacts should occur, where appropriate and practicable, within the same watershed as the impact site. Where a mitigation bank is being developed in conjunction with a wetland resource planning initiative (e.g., Special Area Management Plan, State Wetland Conservation Plan) to satisfy particular wetland restoration objectives, the permitting agency will determine, in coordination with the Federal resource agencies, whether use of the bank should be considered an appropriate form of compensatory mitigation for impacts occurring within the same watershed.

5. Wetland mitigation banks should generally be in place and functional before credits may be used to offset permitted wetland losses. However, it may be appropriate to allow incremental distribution of credits corresponding to the appropriate stage of successful establishment of wetland functions. Moreover, variable mitigation ratios (credit acreage to impacted wetland acreage) may be used in such circumstances to reflect the wetland functions attained at a bank site at a particular point in time. For example, higher ratios would be required when a bank is not yet fully functional at the time credits are to be withdrawn.

6. Establishment of each mitigation bank should be accompanied by the development of a formal written agreement (e.g., memorandum of agreement) among the Corps, EPA, other relevant resource agencies, and those parties who will own, develop, operate or otherwise participate in the bank. The purpose of the agreement is to establish clear guidelines for establishment and use of the mitigation bank. A wetlands mitigation bank may also be established through issuance of a Section 404 permit where establishing the proposed bank involves a discharge of dredged or fill material into waters of the United States. The banking agreement or, where applicable, special conditions of the permit establishing the bank should address the following considerations, where appropriate:

(a) location of the mitigation bank;

(b) goals and objectives for the mitigation bank project;

(c) identification of bank sponsors and participants;

(d) development and maintenance plan;

(e) evaluation methodology acceptable to all signatories to establish bank credits and assess bank success in meeting the project goals and objectives;

(f) specific accounting procedures for tracking crediting and debiting;

(g) geographic area of applicability;

(h) monitoring requirements and responsibilities;

(i) remedial action responsibilities including funding; and

(j) provisions for protecting the mitigation bank in perpetuity.

Agency participation in a wetlands mitigation banking agreement may not, in any way, restrict or limit the authorities and responsibilities of the agencies.

7. An appropriate methodology, acceptable to all signatories, should be identified and used to evaluate the success of wetland restoration and creation efforts within the mitigation bank and to identify the appropriate stage of development for issuing mitigation credits. A full range of wetland functions should be assessed. Functional evaluations of the mitigation bank should generally be conducted by a multi-disciplinary team representing involved resource and regulatory agencies and other appropriate parties. The same methodology should be used to determine the functions and values of both credits and debits. As an alternative, credits and debits can be based on acres of various types of wetlands (e.g., National Wetland Inventory classes). Final determinations regarding debits and credits will be made by the Corps, or other appropriate permitting agency, in consultation with Federal resource agencies.

8. Permit applicants may draw upon the available credits of a third party mitigation bank (i.e., a bank developed and operated by an entity other than the permit applicant). The Section 404 permit, however, must state explicitly that the permittee remains responsible for ensuring that the mitigation requirements are satisfied.

9. To ensure legal enforceability of the mitigation conditions, use of mitigation conditions, use of mitigation bank credits must be conditioned in the Section 404 permit by referencing the banking agreement or Section 404 permit establishing the bank; however, such a provision should not limit the responsibility of the Section 404 permittee for satisfying all legal requirements of the permit.

signed 8–23–93

Robert H. Wayland, III,

Director, Office of Wetlands, Oceans, and Watersheds, U.S. Environmental Protection Agency.

signed 8–23–93

Michael L. Davis,

Office of the Assistant Secretary of the Army (Civil Works), Department of the Army.

Regulatory Guidance Letter (RGL 93–3)

RGL 93–3 Issued: September 13, 1993
Expires: not applicable.
Subject: Rescission of Regulatory Guidance Letters (RGL) 90–5, 90–7, and 90–8

1. On 25 August 1993 the final ''Excavation Rule'' was published in the **Federal Register** (58 FR 45008) and becomes effective on 24 September 1993. This regulation modifies the definition of ''Discharge of Dredged Material'' to address landclearing activities (see 33 CFR 232.2(d)); modifies the definitions of ''Fill Material'' and ''Discharge of Fill Material'' to address the placement of pilings (see 33 CFR 323.2 (e) and (f) and 323.3(c)); and modifies the definition of ''waters of the United States'' to address prior converted cropland (see 33 CFR 328.(a)(8)).

2. Therefore, RGL 90–5, Subject: ''Landclearing Activities Subject to Section 404 Jurisdiction''; RGL 90–7, Subject: ''Clarification of the Phrase 'Normal Circumstances' as it pertains to Cropped Wetlands''; and RGL 90–8, Subject: ''Applicability of Section 404 to Pilings''; are hereby rescinded effective 24 September 1993. Furthermore, although RGL 90–5, Subject: ''Landclearing Activities Subject to Section 404 Jurisdiction'' expired on 31 December 1992 it should continue to be applied until 24 September 1993.

3. In addition, RGL's 90–5, 90–7, and 90–8 as of 24 September 1993 will no longer be used for guidance since the guidance contained in those RGL's has been superseded by the regulation.

For the Director of Civil Works:

John P. Elmore, P.E.,

Chief, Operations, Construction and Readiness Division, Directorate of Civil Works.

Regulatory Guidance Letter, RGL 94–1

Date: 23 May 1994, Expires: 31 December 1999
Subject: Expiration of Geographic Jurisdictional Determinations.

1. Regulatory Guidance Letter (RGL) 90–6, Subject: ''Expiration Dates for Wetlands Jurisdictional Delineations'' is extended until 31 December 1999, subject to the following revisions.

2. This guidance should be applied to all jurisdictional determinations for all waters of the United States made pursuant to Section 10 of the Rivers and Harbors Act of 1899, Section 404 of the Clean Water Act, and Section 103 of the Marine Protection Research and Sanctuaries Act of 1972.

3. To be consistent with paragraph IV.A. of the 6 January 1994, interagency Memorandum of Agreement Concerning the Delineation of Wetlands for Purposes of Section 404 of the Clean Water Act and Subtitle B of the Food Security Act, all U.S. Army Corps of Engineers geographic jurisdictional determinations shall be in writing and normally remain valid for a period of five years. The Corps letter (see paragraph 4.(d) of RGL 90–6) should include a statement that the jurisdictional determination is valid for a period of five years from the date of the letter unless new information warrants revision of the determination before the expiration date.

4. For wetland jurisdictional delineations the ''effective date of this RGL'' referred to in paragraphs 4 and 5 of RGL 90–6 was and remains 14 August 1990. For jurisdictional determinations, other than wetlands jurisdictional delineations, the ''effective date of this RGL'' referred to in paragraphs 4 and 5 of RGL 90–6 will be the date of this RGL.

5. Previous Corps written jurisdictional determinations, including wetland jurisdictional delineations, with a validity period of three years remain valid for the stated period of three years. The district engineer is not required to issue new letters to extend such period from three years to a total of five years. However, if requested to do so, the district engineer will normally extend the three year period to a total of five years unless new information warrants a new jurisdictional determination.

6. Districts are not required to issue a public notice on this guidance but may do so at their discretion.

7. This guidance expires on 31 December 1999 unless sooner revised or rescinded.

For the Director of Civil Works:

John P. Elmore, P.E.

Chief, Operations, Construction and Readiness Division, Directorate of Civil Works.

Regulatory Guidance Letter, RGL 94–2

Date: 17 August 1994, Expires: 31 Dec 1999
CECW–OR
Subject: Superfund Projects

1. Regulatory Guidance Letter (RGL) 85–07, subject: ''Superfund Projects'' is hereby reissued (copy enclosed).

2. This RGL was previously extended by RGL 89–2. Although the extension expired, RGL 85–07 has continued to be U.S. Army Corps of Engineers policy.

3. This guidance expires 31 December 1999 unless sooner revised or rescinded.

For the Director of Civil Works:

John P. Elmore, P.E.,

Chief, Operations, Construction and Readiness Division, Directorate of Civil Works.

Encl

RGL 85–7, Dated 5 July 1985, Expires 31 Dec 1987
Subject: Superfund Projects

1. Recently, the Chief Counsel, Mr. Lester Edelman, responded to a letter from Mr. William N. Hedeman, Jr., Director, Office of Emergency and Remedial Response, Environmental Protection Agency (EPA) which dealt with the need for Department of Army authorizations for the Comprehensive Environmental Response, Compensation and Liability Act (CERCLA) actions. This letter summarizes Mr. Edelman's opinion and provides operating guidance for field interaction with the EPA.

2. EPA's basic position is that Congress did not intend for CERCLA response actions to be subject to other environmental laws. Rather, as a matter of sound practice, CERCLA response actions generally should meet the standards established by those laws. Consequently, it is the EPA's position that neither it nor the states, in pursuing response actions at the location of the release or threatened release under the authority of CERCLA, are required to obtain permits under Section 404 of the Clean Water Act or Section 10 of the Rivers and Harbors Act for those actions.

3. Mr. Edelman stated in part that he has some reservations about the position that the EPA has taken. Nevertheless, he recognizes that the EPA has the primary authority for the interpretation and application of CERCLA, and therefore would defer to the EPA's reading of its own statutory authorities, at least for the time being.

4. In light of this legal opinion, FOAs should not require applications for the EPA or state response actions at the location of the release or threatened release pursued under the authority of CERCLA. Any permit applications in process should be terminated.

5. Both the EPA and OCE believe that the FOAs' expertise in assessing the public interest factors for dredging and filling operations can contribute to the overall quality of the CEROLA response action. The Director of Civil Works will be establishing a group from his staff to work with the EPA staff to develop a framework for integrating the Corps Sections 10, Section 404 and, if appropriate, Section 103 concerns into the EPA's substantive Superfund reviews.

6. Until specific guidance is provided from OCE, FOAs should provide technical support to the EPA regions and/or the states on matters within their field of expertise.

For the Chief of Engineers:

C.E. Edgar III

[FR Doc. 95–6253 Filed 3–13–95; 8:45 am]

BILLING CODE 3710–92–M

DEPARTMENT OF EDUCATION

Indian Education National Advisory Council; Meeting

AGENCY: National Advisory Council on Indian Education, Education.

ACTION: Notice of hearing.

SUMMARY: The National Advisory Council on Indian Education invites the public to attend a one-day hearing conducted by the Council. This notice also describes the functions of the Council. Notice of this meeting is required under section 10(a)(2) of the Federal Advisory Committee Act.

DATES AND TIMES: Sunday, March 19, 1995 from 9:00 p.m. to 3:00 p.m.

ADDRESSES: The hearing will be held at the Quality Hotel Capitol Hill in the Sky Suite, 415 New Jersey Avenue N.W., Washington, DC 20001, (202) 638–1616, Fax (202) 638–0707.

FOR FURTHER INFORMATION CONTACT: John W. Cheek, Acting Director, National Advisory Council on Indian Education, 330 C Street, S.W., Room 4072, Switzer Building, Washington, DC 20202–7556. Telephone: 202/205–8353.

SUPPLEMENTARY INFORMATION: The National Advisory Council on Indian Education is established under section 5342 of the Indian Education Act of 1988 (25 U.S.C. 2642). The Council is established to, among other things, assist the Secretary of Education in carrying out responsibilities under the Indian Education Act of 1988 (Part C, Title V, Pub. L. 100–297) and to advise Congress and the Secretary of Education with regard to federal education programs in which Indian children or adults participate or from which they can benefit.

The National Advisory Council on Indian Education is scheduling a one-day hearing on Sunday, March 19, 1995, prior to the National American Indian and Alaska Native Education Summit being planned for March 20–22, 1995. The hearing will allow participants the opportunity to present written and/or oral testimony on any of the topic areas being addressed by the national summit or any other area of concern related to Indian education. The five key issues areas to be addressed during the summit include: Tribal Sovereignty/Trust Responsibility; Education Policy Development; the Impact of Goals 2000, A Tribal Perspective; Native Language and Culture; and the Federal Budget. Any submitted testimony and address one of the previously mentioned topic areas and follow this format: Statement of the problem; statement of desired remedy or solution; argument on behalf of desired remedy; and identification of who needs to do what and who oversees its follow through. Other testimony from topic areas not specifically addressed by the summit are also welcome. Findings from the hearing will be incorporated into the overall summit agenda. Participants wishing to present written and/or oral testimony are requested to submit any documentation to the staff of the National Advisory Council on Indian Education prior to the hearing if possible and no later than 5:00 p.m. on the day of the hearing. Testimony may also be faxed to the NACIE office at (202) 205–9446 any time prior to the hearing date. Oral testimony will be scheduled according to topic areas and announced the morning of the hearing or from the NACIE office the week prior to the summit.

Records are kept of all Council proceedings, and are available for public inspection at the office of the National Advisory Council on Indian Education located at 330 C Street S.W., Room 4072, Washington, DC 20202–7556 from the hours of 9:00 a.m. to 4:30 p.m. Monday through Friday.

Dated: March 8, 1995.

John W. Cheek,

Acting Director, National Advisory Council on Indian Education.

[FR Doc. 95–6278 Filed 3–13–95; 8:45 am]

BILLING CODE 4000–01–M

National Educational Research Policy and Priorities Board; Meeting

AGENCY: National Educational Research Policy and Priorities Board, Education.

ACTION: Notice of meeting.

SUMMARY: This notice sets forth the schedule and proposed agenda of the inaugural meeting of the National Educational Research Policy and Priorities Board. This notice also describes the functions of the Board. Notice of this meeting is required under Section 10(a)(2) of the Federal Advisory Committee Act and is intended to notify the public of their opportunity to attend.

DATES AND TIMES: March 30, 1995, 10:15 a.m. to 4:30 p.m.; March 31, 1995, 9 a.m. to 1 p.m.

ADDRESSES: The Montpelier Room of the Washington Court Hotel, 525 New Jersey Ave., Washington, D.C. 20001.

FOR FURTHER INFORMATION CONTACT: John Christensen, Designated Federal Official, National Educational Research Policy and Priorities Board, 555 New Jersey Ave., N.W., Washington, D.C. 20208–7564. Telephone: (202) 219–2065; FAX: (202) 219–1466.

SUPPLEMENTARY INFORMATION: The National Educational Research Policy and Priorities Board is authorized by Section 921 of the Educational Research, Development, Dissemination, and Improvement Act of 1994. The Board works collaboratively with the Assistant Secretary for the Office of Educational Research and Improvement to forge a national consensus with respect to a long-term agenda for educational research, development, and dissemination, and to provide advice and assistance to the Assistant Secretary in administering the duties of the Office.

The meeting of the Board is open to the public. The agenda for March 30 includes a discussion of the restructuring of the Office of Educational Research and Improvement and an overview of agency activities pertaining to its Research Priorities Plan and advance preparations for competitions for regional educational laboratories and research and development centers. On March 31 members will have briefings on the Federal Advisory Committee Act; standards of ethical conduct; and the background of the Board's authorizing legislation.

A final agenda will be available from the Board's office on March 23, 1995.

Records are kept of all Board proceedings, and are available for public inspection at the office of the National Educational Research Policy and Priorities Board, 555 New Jersey Ave., N.W., Washington, D.C. 20208–7564.

Dated: March 8, 1995.

Sharon P. Robinson,

Assistant Secretary, Office of Educational Research and Improvement.

[FR Doc. 95–6273 Filed 3–13–95; 8:45 am]

BILLING CODE 4000–01–M

DEPARTMENT OF ENERGY

Environmental Management Site-Specific Advisory Board, Monticello Site

AGENCY: Department of Energy.

ACTION: Notice of open meeting.

SUMMARY: Pursuant to the provisions of the Federal Advisory Committee Act (Public Law 92–463, 86 Stat. 770) notice is hereby given of the following Advisory Board Committee Meeting: Environmental Management Site-Specific Advisory Board, Monticello Site.

DATE AND TIME: Tuesday, March 21, 1995, 6:30 p.m. - 8:00 p.m.

ADDRESS: Monticello High School, 164 South 2nd West, Monticello, Utah 84535.

FOR FURTHER INFORMATION CONTACT: Audrey Berry, Public Affairs Specialist, Department of Energy Grand Junction Projects Office, P.O. Box 2567, Grand Junction, CO, 81502 (303) 248–7727.

SUPPLEMENTARY INFORMATION: Purpose of the Board: The purpose of the Board is to advise DOE and its regulators in the areas of environmental restoration, waste management, and related activities.

Tentative Agenda: The Environmental Management Site-Specific Advisory Board, Monticello Site, will be discussing issues related to the disposal of uranium mill tailings.

Public Participation: The meeting is open to the public. Written statements may be filed with the Committee either before or after the meeting. Individuals who wish to make oral statements pertaining to agenda items should contact Audrey Berry's office at the address or telephone number listed above. Requests must be received 5 days prior to the meeting and reasonable provision will be made to include the presentation in the agenda. The Designated Federal Official is empowered to conduct the meeting in a fashion that will facilitate the orderly conduct of business. Each individual wishing to make public comment will be provided a maximum of 5 minutes to present their comments. This notice is being published less than 15 days before the date of the meeting, due to programmatic issues that had to be resolved prior to publication.

Minutes: The minutes of this meeting will be available for public review and copying at the Freedom of Information Public Reading Room, 1E–190, Forrestal Building, 1000 Independence Avenue, SW, Washington, DC 20585 between 9:00 a.m. and 4 p.m., Monday-Friday, except Federal holidays. Minutes will also be available by writing to Audrey Berry, Department of Energy Grand Junction Projects Office, P.O. Box 2567, Grand Junction, CO 81502, or by calling her at (303)-248–7727.

Issued at Washington, DC on March 8, 1995.

Gail Cephas,

Acting Deputy Advisory Committee Management Officer.

[FR Doc. 95–6244 Filed 3–13–95; 8:45 am]

BILLING CODE 6450–01–P

Environmental Management Site Specific Advisory Board, Pantex Plant

AGENCY: Department of Energy.

ACTION: Notice of open meeting.

SUMMARY: Pursuant to the provisions of the Federal Advisory Committee Act (Pub. L. 92–63, 86 Stat. 770) notice is hereby given of the following Advisory Committee meeting: Environmental Management Site Specific Advisory Board (EM SSAB), Pantex Plant.

DATES AND TIMES: Tuesday, March 28, 1995: 1:30 pm - 5:30 pm.

ADDRESSES: Amarillo Association of Realtors, 5601 Enterprise Circle, Amarillo, TX.

FOR FURTHER INFORMATION CONTACT: Tom Williams, Program Manager, Department of Energy, Amarillo Area Office, P.O. Box 30030, Amarillo, TX 79120 (806)477–121.

SUPPLEMENTARY INFORMATION:

Purpose of the Committee: The Pantex Plant Citizens' Advisory Board provides input to the Department of Energy on Environmental Management strategic decisions that impact future use, risk management, economic development, and budget prioritization activities.

Tentative Agenda

1:30 pm Welcome—Agenda Review—Introductions Nominations and Membership Working Group
1:35 pm Agreement in Principle
2:30 pm DOE Budget
3:15 pm Break
3:30 pm Working Group Reports Policy and Personnel: status of hiring SSAB evaluation goals and criteria
3:50 pm Nominations and Membership
4:00 pm Training and Program Working Group—plans for next meetings
4:10 pm Budget and Finance Working Group—selection of chair, budget report
4:20 pm Community Outreach Subcommittee—status of work
4:30 pm Updates: Occurrence Report from DOE etc.
5:00 pm Co-Chairs' Reports
5:20 pm Next Meetings: Tuesday, April 25, 1:30—5:30; Tuesday, May 23, 1:30—5:30; Tuesday, June 27, 1:30—5:30

5:30 pm Adjourn

Public comment will be taken periodically throughout the meeting.

Public Participation: The meeting is open to the public. Written statements may be filed with the Committee either before or after the meeting. Written comments will be accepted at the address above for 15 days after the date of the meeting. Individuals who wish to make oral statements pertaining to agenda items should contact Tom Williams' office at the address or telephone number listed above. Requests must be received 5 days prior to the meeting and reasonable provision will be made to include the presentation in the agenda. The Designated Federal Official is empowered to conduct the meeting in a fashion that will facilitate the orderly conduct of business. Each individual wishing to make public comment will be provided a maximum of 5 minutes to present their comments. This Notice is being published less than fifteen days before the date of the meeting due to programmatic issues that had to be resolved before publication.

Minutes: The minutes of this meeting will be available for public review and copying at the Pantex Public Reading Rooms located at the Amarillo College Lynn Library and Learning Center, 2201 South Washington, Amarillo, TX phone (806)371–400. Hours of operation are from 7:45 am to 10:00 pm, Monday through Thursday; 7:45 am to 5:00 pm on Friday; 8:30 am to 12:00 noon on Saturday; and 2:00 pm to 6:00 pm on Sunday, except for Federal holidays. Additionally, there is a Public Reading Room located at the Carson County Public Library, 401 Main Street, Panhandle, TX phone (806)537–3742. Hours of operation are from 9:00 am to 7:00 pm on Monday; 9:00 am to 5:00 pm, Tuesday through Friday; and closed Saturday and Sunday as well as Federal Holidays. Minutes will also be available by writing or calling Tom Williams at the address or telephone number listed above.

Issued at Washington, DC on March 8, 1995.

Gail Cephas,

Acting Deputy Advisory Committee Management Officer.

[FR Doc. 95–6245 Filed 3–13–95; 8:45 am]

BILLING CODE 6450–1–P

Office of Civilian Radioactive Waste Management

Safe Transportation and Emergency Response Training; Technical Assistance and Funding

AGENCY: Office of Civilian Radioactive Waste Management, Department of Energy.

ACTION: Notice extending comment period.

SUMMARY: On Tuesday, January 3, 1995, the Department of Energy published a Notice of Inquiry (60 FR 99) that described implementation options and invited comment for a program of technical assistance and funding to States and Tribes for public safety officials of appropriate local jurisdictions with regard to the transport of spent nuclear fuel or high-level radioactive waste. The program would cover safe, routine transport procedures and emergency response capabilities as directed in the Nuclear Waste Policy Act of 1982, as amended, (42 U.S.C. 10101 *et seq.*). The comment period for this Notice of Inquiry was scheduled to close on April 3, 1995.

Today's notice announces a 45-day extension of the comment period on implementation options addressed in the Notice of Inquiry. The Department is taking this action in response to requests for an extension of the comment period received from the Council of State Governments—Midwestern Office, Council of State Governments—Eastern Regional Conference, Southern States Energy Board, and the Western Interstate Energy Board.

DATES: Written comments should be mailed to the Department and must be received on or before May 18, 1995.

ADDRESSES: Written comments (3 copies) should be directed to: U.S. Department of Energy, c/o Lois Smith, TRW Environmental Safety Systems, 2650 Park Tower Drive, Suite 800, Vienna, Virginia 22180, ATTN: Section 180(c) Comments. Persons submitting comments should include their names and addresses. Receipt of comments in response to this Notice will be acknowledged if a stamped, self-addressed postal card or envelope is enclosed.

FOR FURTHER INFORMATION CONTACT: For further information on the transportation of spent fuel and high-level radioactive waste under the Nuclear Waste Policy Act, please contact: Mr. Allen Benson, Operational Activities Team Leader, Office of Civilian Radioactive Waste Management (RW–45), U.S. Department of Energy, 1000 Independence Avenue, SW., Washington, D.C. 20585, Telephone: (202) 586–2280. For general information on this Notice, please contact: Ms. Ellen Ott, Office of General Counsel, (GC–52), U.S. Department of Energy, 1000 Independence Avenue, SW., Washington, D.C. 20585, Telephone: (202) 586–6975.

Information packets are available for interested persons who want background information about Office of Civilian Radioactive Waste Management (OCRWM) transportation prior to providing comments. To receive an information packet, please call: 1–800–225–NWPA (or call 488–5513 in Washington, D.C.) or write to the OCRWM Information Center, Post Office Box 44375, Washington, D.C. 20026.

Copies of comments received will be available for examination and may be photocopied at the Department's public reading room at 1000 Independence Avenue SW, room 1E–190, Washington, D.C.

Daniel A. Dreyfus,

Director, Office of Civilian Radioactive Waste Management.

[FR Doc. 95–6249 Filed 3–13–95; 8:45 am]

BILLING CODE 6450–01–P

Energy Information Administration

Forms CE–63A/B, ''Annual Solar Thermal Collector Manufacturers Survey'' and ''Annual Photovoltaic Module/Cell Manufacturers Survey''

AGENCY: Energy Information Administration, Department of Energy.

ACTION: Notice of the proposed extension of the Forms CE–63A/B, ''Annual Solar Thermal Collector Manufacturers Survey'' and ''Annual Photovoltaic Module/Cell Manufacturers Survey,'' and solicitation of comments.

SUMMARY: The Energy Information Administration (EIA), as part of its continuing effort to reduce paperwork and respondent burden (required by the Paperwork Reduction Act of 1980), conducts a presurvey consultation program to provide the general public and other Federal agencies the opportunity to comment on continuing or proposed new data collection forms. This program helps to ensure that requested data can be provided in the desired format, reporting burden is minimized, data collection forms are clearly understood, and that the impact of collection requirements on respondents can be properly assessed. Currently, EIA is soliciting comments concerning the proposed extension of

the Forms CE–63A/B, ''Annual Solar Thermal Collector Manufacturers Survey'' and ''Annual Photovoltaic Module/Cell Manufacturers Survey.''

DATES: Written comments must be submitted by April 13, 1995. If you anticipate that you will be submitting comments, but find it difficult to do so within the period of time allowed by this notice, you should advise the contact person listed below of your intention to do so as soon as possible.

ADDRESSES: Send comments to Peter Holihan, EI–522, Energy Information Administration, U.S. Department of Energy, Washington, D.C. 20585. Phone: (202) 254–5432.

FOR FURTHER INFORMATION CONTACT: Requests for additional information or copies of the form and instructions should be directed to Peter Holihan at the address listed above.

SUPPLEMENTARY INFORMATION:

I. Background
II. Current Actions
III. Request for Comments

I. Background

In order to fulfill its responsibilities under the Federal Energy Administration Act of 1974 (Pub. L. 93–275) and the Department of Energy Organization Act (Pub. L. 95–91), the Energy Information Administration is obliged to carry out a comprehensive, and integrated energy data and information program for the collection, evaluation, assembly, analysis, and dissemination of data and information relating to energy resource reserves, production, demand, technology and relevant economic and statistical information relating to the adequacy of energy resources to meet demands in the near and longer term future for the Nation's economic and social needs.

Form CE–63A collects data on solar thermal collector shipments, solar thermal systems, and solar-related manufacturing, marketing, and geographic information from companies in the United States that are engaged in manufacturing or importing solar thermal collectors. Solar thermal shipments are in terms of square feet.

Form CE–63B collects data on photovoltaic cell and module shipments, photovoltaic systems, and photovoltaic-related manufacturing and marketing information from companies in the United States that are engaged in manufacturing or importing photovoltaic cells and modules. Photovoltaic cell and module shipments are in terms of electrical capacity expressed in peak kilowatts.

II. Current Actions

At this time, the EIA is proposing a three-year extension of Forms CE–63A/B. The EIA is planning to meet with solar industry companies and associations, DOE personnel, and other interested parties to discuss Forms CE–63A/B. If changes are made to Forms CE–63A and/or CE–63B as a result of this notice, the meeting, or other activities, the changes will be highlighted in the **Federal Register** notice announcing the submission of the forms to the Office of Management and Budget later this year.

III. Request for Comments

Prospective respondents and other interested parties should comment on the proposed extension of the Forms CE–63A/B. The following general guidelines are provided to assist in the preparation of responses. When commenting, please indicate to which form your comments apply.

As a potential respondent:

A. Are the instructions and definitions clear and sufficient? If not, which instructions require clarification?

B. Can the data be submitted using the definitions included in the instructions?

C. Can data be submitted in accordance with the response time specified in the instructions?

D. Public reporting burden for this collection is estimated to average 3 hours per response. How much time, including time for reviewing instructions, searching existing data sources, gathering and maintaining the data needed, and completing and reviewing the collection of information, do you estimate it will require you to complete and submit the required form?

E. What is the estimated cost of completing this form, including the direct and indirect costs associated with the data collection? Direct costs should include all costs, such as administrative costs, directly attributable to providing this information.

F. How can the form be improved?

G. Do you know of any other Federal, State, or local agency that collects similar data? If you do, specify the agency, the data element(s), and the means of collection.

As a potential user:

A. Can you use data at the levels of detail indicated on the form?

B. For what purpose would you use the data? Be specific.

C. How could the form be improved to better meet your specific needs?

D. Are there alternate sources of data and do you use them? What are their deficiencies and/or strengths?

EIA is also interested in receiving comments from persons regarding their views on the need for the information contained in the ''Annual Solar Thermal Collector Manufacturers Survey'' and ''Annual Photovoltaic Module/Cell Manufacturers Survey.''

Comments submitted in response to this notice will be summarized and/or included in the request for OMB approval of the forms; they also will become a matter of public record.

Statutory Authority: Section 2(a) of the Paperwork Reduction Act of 1980, (Pub. L. 96–511), which amended Chapter 35 of Title 44 United States Code (See 44 U.S.C. § 3506(a) and (c)(1)).

Issued in Washington, DC, March 7, 1995.

Yvonne M. Bishop,

Director, Statistical Standards, Energy Information Administration.

[FR Doc. 95–6246 Filed 3–13–95; 8:45 am]

BILLING CODE 6450–01–P

Federal Energy Regulatory Commission

[Docket No. ER95–529–000 et al.]

Kentucky Utilities Company et al.; Electric Rate and Corporate Regulation Filings

March 7, 1995.

Take notice that the following filings have been made with the Commission:

1. Kentucky Utilities Co.

[Docket No. ER95–529–000]

Take notice that on February 21, 1995, Kentucky Utilities Company tendered for filing an amendment to its February 1, 1995 filing in the above-referenced docket.

Comment date: March 21, 1995, in accordance with Standard Paragraph E at the end of this notice.

2. Ohio Edison Co.

[Docket No. ER95–550–000]

Take notice that on February 17, 1995, Ohio Edison Company tendered for filing an amendment to its February 3, 1995 filing in the above-referenced docket.

Comment date: March 21, 1995, in accordance with Standard Paragraph E at the end of this notice.

3. Wisconsin Power and Light Co.

[Docket No. ER95–649–000]

Take notice that on February 27, 1995, Wisconsin Power and Light Company (WP&L), tendered for filing a signed Service Agreement under WP&L's Bulk Power Sales Tariff between itself and InterCoast Power Marketing Company. WP&L respectfully requests a waiver of the Commission's notice requirements, and an effective date of February 1, 1995.

Comment date: March 21, 1995, in accordance with Standard Paragraph E at the end of this notice.

4. Wisconsin Public Service Corp.

[Docket No. ER95–650–000]

Take notice that on February 27, 1995, Wisconsin Public Service Corporation (WPSC), tendered for filing an executed Supplement No. 2 to Transmission Service Agreement No. 2 between WPSC and Manitowoc Public Utilities. The Agreement provides for transmission service under the T–1 Transmission Tariff, FERC Original Volume No. 4.

WPSC asks that the agreement become effective June 1, 1995.

Comment date: March 21, 1995, in accordance with Standard Paragraph E at the end of this notice.

5. The United Illuminating Co.

[Docket No. ER95–651–000]

Take notice that on February 27, 1995, The United Illuminating Company (UI), 157 Church Street, New Haven, Connecticut, submitted for filing a rate schedule confirming daily sales of system power by UI to Fitchburg Gas and Electric Company between November 16, 1991 and February 13, 1994. UI has sought waiver of the sixty-day notice requirement under 18 CFR 35.3 to permit an effective date of November 16, 1991. UI also requests that the rate schedule terminate on February 17, 1994.

Comment date: March 21, 1995, in accordance with Standard Paragraph E at the end of this notice.

6. Arizona Public Service Co.

[Docket No. ER95–653–000]

Take notice that on February 27, 1995, Arizona Public Service Company (APS), tendered for filing a Service Agreement under APS-FERC Electric Tariff Original Volume No. 1 (APS Tariff) with the following entity:

LG&E Power Marketing, Inc.

A copy of this filing has been served on the above listed entity and the Arizona Corporation Commission.

Comment date: March 21, 1995, in accordance with Standard Paragraph E at the end of this notice.

7. Idaho Power Co.

[Docket No. ER95–654–000]

Take notice that on February 27, 1995, Idaho Power Company (IPC), tendered for filing wholesale or transmission agreements between Idaho Power Company and Bonneville Power Administration, Sierra Pacific Power Company, Utah Associated Municipal Power Systems and Washington City, Utah regarding monthly contract demand values or monthly capacity and energy values.

IPC has requested waiver of the notice provisions of § 35.3 of the Commission's regulations in order to permit the revisions to become effective as of January 1, 1995.

Comment date: March 21, 1995, in accordance with Standard Paragraph E at the end of this notice.

8. Niagara Mohawk Power Corp.

[Docket No. ER95–655–000]

Take notice that on February 27, 1995, Niagara Mohawk Power Corporation (Niagara Mohawk), tendered for filing an agreement between Niagara Mohawk and CNG Power Services Corporation (CNG) dated February 22, 1995 providing for certain transmission services to CNG.

Copies of this filing were served upon CNG and the New York State Public Service Commission.

Comment date: March 21, 1995, in accordance with Standard Paragraph E at the end of this notice.

9. Jersey Central Power & Light Co., Metropolitan Edison Co., Pennsylvania Electric Co.

[Docket No. ER95–656–000]

Take notice that on February 28, 1995, GPU Service Corporation (GPU), on behalf of Jersey Central Power & Light Company, Metropolitan Edison Company and Pennsylvania Electric Company (jointly referred to as the GPU Operating Companies), filed an executed Service Agreement between GPU and Catex Vitol Electric Inc. (Catex Vitol), dated February 15, 1995. This Service Agreement specifies that Catex Vitol has agreed to the rates, terms and conditions of the GPU Operating Companies' Operating Capacity and/or Energy Sales Tariff (Sales Tariff) designated as FERC Electric Tariff, Original Volume No. 1. The Sales Tariff was accepted by the Commission by letter order issued on February 10, 1995 in *Jersey Central Power & Light Co., Metropolitan Edison Co. and Pennsylvania Electric Co.,* Docket No. ER95–276–000 and allows GPU and Catex Vitol to enter into separately scheduled transactions under which the GPU Operating Companies will make available for sale, surplus operating capacity and/or energy at negotiated rates that are no higher than the GPU Operating Companies' cost of service.

GPU requests a waiver of the Commission's notice requirements for good cause shown and an effective date of February 15, 1995 for the Service Agreement.

GPU has served copies of the filing on regulatory agencies in New Jersey and Pennsylvania.

Comment date: March 21, 1995, in accordance with Standard Paragraph E at the end of this notice.

10. Sierra Pacific Power Co.

[Docket No. ER95–657–000]

Take notice that on February 28, 1995, Sierra Pacific Power Company (Sierra) tendered for filing pursuant to Part 35 *et seq.* of the Commission's regulations, the Electric Service Agreement dated February 27, 1995 (the Agreement) between Sierra and Truckee Donner Public Utility District (the District).

Sierra states that the Agreement provides for a continuation of the existing firm electric service by Sierra to the District, but at rates that reflect a revenue reduction for such service. The Agreement provides for commencement of service thereunder as of March 1, 1995 or such later date as the Commission permits the filing to be effective. Sierra requests waiver of the 60-day notice requirement of section 205 of the Federal Power Act to provide for a March 1, 1995 effective date. While Sierra states its belief that no other waivers of the Act or the Commission's rules or regulations are necessary to make effective the Agreement pursuant to its terms, Sierra requests any such waiver necessary or desirable for that purpose.

Sierra asserts that the filing has been served on the District and on the regulatory commissions of Nevada and California.

Comment date: March 21, 1995, in accordance with Standard Paragraph E at the end of this notice.

11. Montaup Electric Co.

[Docket No. ER95–658–000]

Take notice that on February 28, 1995, Montaup Electric Company tendered for filing an annual report titled Conservation and Load Management Informational Report Proposed Surcharge—February 28, 1995—supporting surcharges for the period March 1, 1995 through February 28, 1996. This annual report filing is required under a conservation and load management (C&LM) clause applied to service to Montaup's affiliated M-rate customers as amended by Montaup in a filing approved by the Commission on May 4, 1993 in Docket No. ER93–79–000. The informational report shows the surcharges that will be required to true up collections for the twelve months ended December 31, 1994 with actual C&LM costs during that period.

Comment date: March 21, 1995, in accordance with Standard Paragraph E at the end of this notice.

12. Tucson Electric Power Co.

[Docket No. ER95–659–000]

Take notice that on February 28, 1995, Tucson Electric Power Company (Tucson), tendered for filing (i) Service Schedule D, Power Exchange Agreement, between Tucson and M–S–R Public Power Agency (MSR) and (ii) Service Schedule E, Reserve Sharing, between Tucson and MSR. Service Schedule D and Service Schedule E were entered into pursuant to an Interconnection Agreement, dated as of September 20, 1982, Docket No. ER82–828–000. Service Schedule D provides for an exchange of capacity and energy between Tucson and MSR in which MSR will deliver its capacity and energy entitlement in San Juan Unit 4 to TEP at San Juan in exchange for a like amount of capacity and energy deliverable by Tucson at certain delivery points on Tucson's system. Service Schedule E provides for a reserve sharing arrangement involving MSR's San Juan capacity rights and Tucson's San Juan capacity rights which will enable the parties to reduce their respective reserve requirements. Tucson requests an effective date of May 1, 1995.

Copies of this filing have been served upon all parties affected by this proceeding.

Comment date: March 21, 1995, in accordance with Standard Paragraph E at the end of this notice.

Standard Paragraphs

E. Any person desiring to be heard or to protest said filing should file a motion to intervene or protest with the Federal Energy Regulatory Commission, 825 North Capitol Street NE., Washington, DC 20426, in accordance with Rules 211 and 214 of the Commission's Rules of Practice and Procedure (18 CFR 385.211 and 18 CFR 385.214). All such motions or protests should be filed on or before the comment date. Protests will be considered by the Commission in determining the appropriate action to be taken, but will not serve to make protestants parties to the proceeding. Any person wishing to become a party must file a motion to intervene. Copies of this filing are on file with the Commission and are available for public inspection.

Lois D. Cashell,

Secretary.

[FR Doc. 95–6178 Filed 3–13–95; 8:45 am]

BILLING CODE 6717–01–P

[Docket Nos. CP94–682–000 and CP94–682–001]

Southern Natural Gas Company; Availability of the Environmental Assessment for the Proposed Cleveland Branch Line Project

March 8, 1995.

The staff of the Federal Energy Regulatory Commission (FERC or Commission) has prepared this environmental assessment (EA) on the natural gas pipeline facilities proposed by Southern Natural Gas Company (Southern) in the above dockets.

The EA was prepared to satisfy the requirements of the Natural Environmental Policy Act. The staff concludes that approval of the proposed project, with appropriate mitigating measures, would not constitute a major Federal action significantly affecting the quality of the human environment.

The EA assesses the potential environmental effects of the construction and operation of Southern's proposed Cleveland Branch Line Project, which includes the following facilities:

- About 20.2 miles of 12-inch-diameter pipeline in Catoosa and Whitfield Counties, Georgia, and Hamilton and Bradley Counties, Tennessee. This pipeline, referred to as the ''Cleveland Branch Line'', would extend from milepost 101.44 on Southern's existing 12-inch Chattanooga Branch Line in Catoosa County, Georgia, to a proposed interconnection owned by East Tennessee Natural Gas Company in Bradley County, Tennessee;
- One new meter station in Bradley County. The meter station would consist of two 6-inch meter runs, pressure regulators, flow control values, about 125 feet of miscellaneous buried piping, and an 8-foot by 10-foot instrumentation building; and
- One 1,452-horsepower turbine compressor unit and other facilities at Southern's existing McConnells Compressor Station in Tuscaloosa County, Alabama.

Southern indicates that proposed facilities would deliver a total firm and interruptible transportation service to nine municipal gas districts and two distribution companies in eastern Tennessee. These customers would receive about 11,350 thousand cubic feet per day of firm transportation from Southern.

The EA has been placed in the public files of the FERC and is available for public inspection at: Federal Energy Regulatory Commission, Public Reference and Files Maintenance Branch, 941 North Capitol Street, N.E., Room 3104, Washington, D.C. 20426, (202) 208–1371.

Copies of this EA have been mailed to Federal, state and local agencies, public interest groups, interested individuals, newspapers, and parties to this proceeding.

A limited number of copies of the EA are available from: Ms. Alisa Lykens, Environmental Project Manager, Environmental Review and Compliance Branch I, Office of Pipeline Regulation, Room 7312, 825 North Capitol Street NE., Washington, D.C. 20426, (202) 208–0766.

Any person wishing to comment on the EA may do so. Written comments must reference Docket Nos. CP94–682–000 and CP94–682–001. Comments should be addressed to: Office of the Secretary, Federal Energy Regulatory Commission, 825 North Capitol Street, NE., Washington, D.C. 20426.

Comments should be filed as soon as possible, but must be received no later than April 10, 1995, to ensure consideration prior to a Commission decision on this proposal. A copy of any comments should be sent to Ms. Alisa Lykens, Environmental Project Manager, at the above address.

Comments will be considered by the Commission but will not serve to make the commentor a party to the proceeding. Any person seeking to become a party to the proceeding must file a motion to intervene pursuant to Rule 214 of the Commission's Rules of Practice and Procedure (18 CFR 385.214).

The date for filing timely motions to intervene in this proceeding has passed. Therefore, parties now seeking to file late interventions must show good cause, as required by § 385.214(b)(3), why this time limitation should be waived. Environmental issues have been reviewed as good cause for late intervention. You do not need intervener status to have your comments considered.

Additional information about this project is available from Ms. Alisa Lykens, Environmental Review and Compliance Branch I, Office of Pipeline Regulation, at (202) 208–0766.

Lois D. Cashell,

Secretary.

[FR Doc. 95–6179 Filed 3–13–95; 8:45 am]

BILLING CODE 6717–01–M

[Docket No. CP89–661–030]

Algonquin Gas Transmission Co., Notice of Changes in FERC Gas Tariff

March 8, 1995.

Take notice that on March 3, 1995, Algonquin Gas Transmission Company

(Algonquin) submitted for filing as part of its FERC Gas Tariff, effective January 23, 1995, the following revised tariff sheets:

Fourth Revised Volume No. 1

Sub Ninth Revised Sheet No. 21
Sub Ninth Revised Sheet No. 22
Sub Sixth Revised Sheet No. 33

Original Volume No. 2

Sub Third Revised Sheet No. 401

Algonquin states that the purpose of this filing is to replace tariff sheets that were accepted by the Commission effective January 1, 1995, with tariff sheets that have an effective date of January 23, 1995.

On December 1, 1994, Algonquin filed the above-referenced tariff sheets to implement revised firm transportation rates under Rate Schedules AFT–2 and X–38. In that filing Algonquin requested that the Commission accept the tariff sheets effective January 1, 1995, to coincide with the commencement of service on the upstream facilities of Columbia Gas Transmission Corporation. In a February 3, 1995 letter order, the Commission accepted the tariff sheets with a January 1, 1995 effective date, as requested by Algonquin. Due to a delay in construction, however, service by Columbia did not commence until January 23, 1995. Accordingly, Algonquin is providing to the Commission substitute tariff sheets that reflect the January 23, 1995 effective date. Except for the change in effective date, the substitute tariff sheets are identical to the sheets accepted by the Commission on February 3, 1995.

Algonquin states that copies of its filing were mailed to all affected customers and interested State Commissions.

Any person desiring to protest said filing should file a protest with the Federal Energy Regulatory Commission, 825 North Capitol Street, N.E., Washington, DC 20426, in accordance with Section 385.211 of the Commission's Rules of Practice and Procedures. All such protests should be filed on or before March 15, 1995. Protests will be considered by the Commission in determining the appropriate action to be taken, but will not serve to make protestants parties to the proceeding. Copies of this filing are on file with the Commission and are available for public inspection in the Public Reference Room.

Lois D. Cashell,

Secretary.

[FR Doc. 95–6170 Filed 3–13–95; 8:45 am]

BILLING CODE 6717–01–M

[Docket No. RP95–200–000]

ANR Pipeline Co.; Notice of Request for Limited Waiver of FERC Gas Tariff

March 8, 1995

Take notice that on March 3, 1995, ANR Pipeline Company (ANR) filed, pursuant to Rule 207 of the Rules of Practice and Procedure of the Federal Energy Regulatory Commission, 18 CFR 385.207, a request for limited waiver, to the extent necessary, of its tariff provisions regarding the time for the filing of restatements of its Gas Supply Realignment (GSR) and Pricing Differential (PD) Reservation Surcharges. ANR explains that its tariff requires it to update its Eligible MDQ as of April 1, 1995.

In order to avoid using estimated Eligible MDQs or different Eligible MDQs for different transition cost surcharges, however, ANR is requesting that it be permitted to restate its GSR and PD Reservation Surcharges effective June 1, 1995, the same date that its next quarterly Above-Market Dakota Costs Reservation Surcharge will become effective.

Any person desiring to be heard or to protest said filing should file a motion to intervene or protest with the Commission, 825 North Capitol Street NE., Washington, DC 20426 in accordance with Rules 211 and 214 of the Commission's Rules of Practice and Procedure (18 CFR 385.211, 385.214). All such motions or protests should be filed on or before March 15, 1995. Protests will be considered by the Commission in determining the appropriate action to be taken, but will not serve to make protestants parties to the proceeding. Any person wishing to become a party must file a motion to intervene. Copies of this application are on file with the Commission and are available for public inspection.

Lois D. Cashell,

Secretary.

[FR Doc. 95–6169 Filed 3–13–95; 8:45 am]

BILLING CODE 6717–01–M

[Docket No. ER93–568–000]

Consolidated Edison Company of New York, Inc.; Notice of Filing

March 8, 1995.

Take notice that on February 27, 1995, Consolidated Edison Company of New York, Inc. tendered for filing an amendment in the above-referenced docket.

Any person desiring to be heard or to protest said filing should file a motion to intervene or protest with the Federal Energy Regulatory Commission, 825 North Capitol Street, NE., Washington, DC 20426, in accordance with Rules 211 and 214 of the Commission's Rules of Practice and Procedure (18 CFR 385.211 and 18 CFR 385.214). All such motions or protests should be filed on or before March 17, 1995. Protests will be considered by the Commission in determining the appropriate action to be taken, but will not serve to make the protestants parties to the proceeding. Any person wishing to become a party must file a motion to intervene. Copies of this filing are on file with the Commission and are available for public inspection.

Lois D. Cashell,

Secretary.

[FR Doc. 95–6171 Filed 3–13–95; 8:45 am]

BILLING CODE 6717–01–M

K N Interstate Gas Transmission Co.; Notice of Filing

March 8, 1995.

On March 1, 1995, K N Interstate Gas Transmission Co. (KN), filed pursuant to Section 4 of the Natural Gas Act, 15 U.S.C. § 717c, Section 154.63, of the Federal Energy Regulatory Commission's (Commission) Regulations, 18 CFR 154.63, and the Commission's order issued December 22, 1994, in Docket Nos. CP94–397–000 and CP94–430–000, for authorization to terminate its non-jurisdictional gathering and processing services in the Bowdoin gathering system to K N Gas Gathering, Inc. KN requests approval as of April 1, 1995.

Any person desiring to be heard or objecting to the granting of qualifying status should file a motion to intervene or protest with the Federal Energy Regulatory Commission, 825 North Capitol Street NE., Washington, D.C. 20426, in accordance with rules 211 and 214 of the Commission's Rules of Practice and Procedure. All such motions or protests must be filed by March 17, 1995 and must be served on the applicant. Protests will be considered by the Commission in determining the appropriate action to be taken but will not serve to make protestants parties to the proceeding. Any person wishing to become a party must file a petition to intervene. Copies of this filing are on file with the Commission and are available for public inspection.

Lois D. Cashell,

Secretary.

[FR Doc. 95–6172 Filed 3–13–95; 8:45 am]

BILLING CODE 6717–01–M

[Docket No. RP95–137–002]

Northern Natural Gas Co.; Notice of Proposed Changes in FERC Gas Tariff

March 8, 1995.

Take notice that on March 6, 1995, Northern Natural Gas Company (Northern), tendered for filing changes in its FERC Gas Tariff, Fifth Revised Volume No. 1.

Northern states that the filing is being made in compliance with the February 23, 1995, Commission Order in the captioned Docket. That Order directed Northern; (1) to re-establish the direct bill amounts by shipper resulting from the buyout of the Pan Alberta Gas (U.S.) Exchange Agreement by removing the costs of the January 1996 payment which is yet to be made, and (2) to provide specific additional supporting information. Therefore Northern has filed the additional supporting information and a Second Substitute Third Revised Sheet No. 68 and will commence billing effective March 1, 1995.

Northern states that copies of this filing were served upon the company's customers and interested State Commissions.

Any person desiring to protest said filing should file a protest with the Federal Energy Regulatory Commission, 825 North Capitol Street, NE., Washington, DC 20426, in accordance with Section 385.211 of the Commission's Rules and Regulations. All such protests should be filed on or before March 15, 1995. All protests will be considered by the Commission in determining the appropriate proceeding, but will not serve to make protestant a party to the proceedings. Copies of this filing are on file with the Commission and are available for inspection.

Lois D. Cashell,

Secretary.

[FR Doc. 95–6173 Filed 3–13–95; 8:45 am]

BILLING CODE 6717–01–M

South Georgia Natural Gas Co.; Notice of Filing

[Docket No. MG88–16–004]

March 8, 1995.

Take notice that on March 3, 1995, South Georgia Natural Gas Company (South Georgia) submitted revised standards of conduct under Order Nos. 497 *et seq.*[1] and Order Nos. 566 *et seq.*[2] South Georgia states that it is revising its standards to incorporate the changes required by the Commission's February 1, 1995 Order on Standards of Conduct.[3]

South Georgia states that copies of this filing have been mailed to all parties on the official service list compiled by the Secretary in this proceeding.

Any person desiring to be heard or to protest said filing should file a motion to intervene or protest with the Federal Energy Regulatory Commission, 825 North Capitol Street NE., Washington, D.C., 20426, in accordance with Rules 211 or 214 of the Commission's Rules of Practice and Procedure (18 CFR 385.211 or 385.214). All such motions to intervene or protest should be filed on or before March 22, 1995. Protests will be considered by the Commission in determining the appropriate action to be taken but will not serve to make protestants parties to the proceeding. Any person wishing to become a party must file a motion to intervene. Copies of this filing are on file with the Commission and are available for public inspection.

Lois D. Cashell,

Secretary.

[FR Doc. 95–6174 Filed 3–13–95; 8:45 am]

BILLING CODE 6717–01–M

---

[1] Order No. 497, 53 FR 22139 (June 14, 1988), III FERC Stats. & Regs. ¶ 30,820 (1988); Order No. 497–A, order on rehearing, 54 FR 52781 (December 22, 1989), III FERC Stats. & Regs. 30,868 (1989); Order No. 497–B Order extending sunset date, 55 FR 53291 (December 28, 1990), III FERC Stats. & Regs. ¶ 30,908 (1990); Order No. 497–C order extending sunset date, 57 FR 9 (January 2, 1992), III FERC Stats. & Regs. ¶ 30,934 (1991), rehearing denied, 57 FR 5815 (February 18, 1992), 58 FERC ¶ 61,139 (1992); Tenneco Gas v. FERC (affirmed in part and remanded in part), 969 F. 2d 1187 (D.C. Cir. 1992); Order No. 497–D, order on remand and extending sunset date, III FERC Stats. & Regs. ¶ 30,958 (December 4, 1992), 57 FR 58978 (December 14, 1992); Order No. 497–E, order on rehearing and extending sunset date, 59 FR 243 (January 4, 1994), 65 FERC ¶ 61,381 (December 23, 1993); Order No. 497–F, order denying rehearing and granting clarification, 59 FR 15336 (April 1, 1994), 66 FERC ¶ 61,347 (March 24, 1994); and Order No. 497–G, order extending sunset date, 59 FR 32884 (June 27, 1994), III FERC Stats. & Regs. ¶ 30,996 (June 17, 1994).

[2] Standards of Conduct and Reporting Requirements for Transportation and Affiliate Transactions, Order No. 566, 59 FR 32885 (June 27, 1994), III FERC Stats. & Regs. ¶ 30,997 (June 17, 1994); Order No. 566–A, order on rehearing, 59 FR 52896 (October 20, 1994), 69 FERC ¶ 61,044 (October 14, 1994); Order No. 566–B, *order on rehearing,* 59 FR 65707 (December 21, 1994); 69 FERC ¶ 61,334 (December 14, 1994); appeal docketed sub nom. *Conoco, Inc.* v. *FERC,* D.C. Cir. No. 94–1745 (December 14, 1994).

[3] 70 FERC ¶ 61,129 (1995).

[Docket No. MG88–15–005]

Southern Natural Gas Co.; Notice of Filing

March 8, 1995.

Take notice that on March 3, 1995, Southern Natural Gas Company (Southern) submitted revised standards of conduct under Order Nos. 497 *et seq.*[1] and Order Nos. 566 *et seq.*[2] Southern states that it is revising its standards to incorporate the changes required by the Commission's February 1, 1995 Order on Standards of Conduct.[3]

Southern states that copies of this filing have been mailed to all parties on the official service list compiled by the Secretary in this proceeding.

Any person desiring to be heard or to protest said filing should file a motion to intervene or protest with the Federal Energy Regulatory Commission, 825 North Capitol Street, N.E., Washington, D.C., 20426, in accordance with Rules 211 or 214 of the Commission's Rules of Practice and Procedure (18 CFR 385.211 or 385.214). All such motions to intervene or protest should be filed on or before March 22, 1995. Protests will be considered by the Commission in determining the appropriate action to be taken but will not serve to make protestants parties to the proceeding. Any person wishing to become a party must file a motion to intervene. Copies of this filing are on file with the

---

[1] Order No. 497, 53 FR 22139 (June 14, 1988), III FERC Stats. & Regs. ¶ 30,820 (1988); Order No. 497–A, order on rehearing, 54 FR 52781 (December 22, 1989), III FERC Stats. & Regs. 30,868 (1989); Order No. 497–B, order extending sunset date, 55 FR 53291 (December 28, 1990), III FERC Stats. & Regs. ¶ 30,908 (1990); Order No. 497–C, order extending sunset date, 57 FR 9 (January 2, 1992), III FERC Stats. & Regs. ¶ 30,934 (1991), rehearing denied, 57 FR 5815 (February 18, 1992), 58 FERC ¶ 61,139 (1992); *Tenneco Gas* v. *FERC* (affirmed in part and remanded in part), 969 F. 2d 1187 (D.C. Cir. 1992); Order No. 497–D, order on remand and extending sunset date, III FERC Stats. & Regs. ¶ 30,958 (December 4, 1992), 57 FR 58978 (December 14, 1992); Order No. 497–E, order on rehearing and extending sunset date, 59 FR 243 (January 4, 1994), 65 FERC ¶ 61,381 (December 23, 1993); Order No. 497–F, order denying rehearing and granting clarification, 59 FR 15336 (April 1, 1994), 66 FERC ¶ 61,347 (March 24, 1994); and Order No. 497–G, order extending sunset date, 59 FR 32884 (June 27, 1994), III FERC Stats. & Regs. ¶ 30,996 (June 17, 1994).

[2] Standards of Conduct and Reporting Requirements for Transportation and Affiliate Transactions, Order No. 566, 59 FR 32885 (June 27, 1994), III FERC Stats. & Regs. ¶ 30,997 (June 17, 1994); Order No. 566–A, order on rehearing, 59 FR 52896 (October 20, 1994), 69 FERC ¶ 61,044 (October 14, 1994); Order No. 566–B, order on rehearing, 59 FR 65707 (December 21, 1994); 69 FERC ¶ 61,334 (December 14, 1994); appeal docketed sub nom. *Conoco, Inc.* v. *FERC,* D.C. Cir. No. 94–1745 (December 14, 1994).

[3] 70 FERC ¶ 61,129 (1995).

Commission and are available for public inspection.

Lois D. Cashell,

Secretary.

[FR Doc. 95–6175 Filed 3–13–95; 8:45 am]

BILLING CODE 6717–01–M

Tennessee Gas Pipeline Co.; Notice of Filing

[Docket No. RP95–112–003]

March 8, 1995.

Take notice that on March 3, 1995, Tennessee Gas Pipeline Company (Tennessee) tendered for filing to become part of its FERC Gas Tariff, Original Volume No. 2, the following tariff sheets to be effective February 1, 1995:

First Revised Sub 30th Revised Sheet No. 5

Tennessee states that the purpose of this filing is to comply with the Commission's February 23, 1995 Order in Docket No. RP95–112 requiring Tennessee to make the Rate Schedule T–180 rate effective February 1, 1995.

Tennessee states that copies of the filing have been mailed to all affected parties.

Any persons desiring to protest said filing should file a protest with the Federal Energy Regulatory Commission, 825 North Capitol Street NE., Washington, D.C. 20426, in accordance with Rule 211 of the Commission's Rules of Practice and Procedure (18 CFR 385.211). All such protests should be filed before March 15, 1995. Protests will be considered by the Commission in determining the appropriate action to be taken, but will not serve to make protestants parties to the proceeding. Copies of this filing are on file with the Commission and are available for public inspection.

Lois D. Cashell,

Secretary.

[FR Doc. 95–6176 Filed 3–13–95; 8:45 am]

BILLING CODE 6717–01–M

Williston Basin Interstate Pipeline Co.; Notice of Technical Conference

[Docket Nos. RP90–137–015, RP90–137–018, and RP90–137–019]

March 8, 1995.

Pursuant to the Commission's letter order, issued on February 15, 1995, a technical conference will be held to resolve the issues raised in the above-captioned proceeding. The conference will be held on Tuesday, March 21, 1995 at 10 a.m. in a room to be designated at the offices of the Federal Energy Regulatory Commission, 810 First Street NE., Washington, DC 20426.

All interested persons and Staff are permitted to attend.

Lois D. Cashell,

Secretary.

[FR Doc. 95–6177 Filed 3–13–95; 8:45 am]

BILLING CODE 6717–01–M

Office of Fossil Energy

[FE Docket No. 94–81–LNG]

Phillips Alaska Natural Gas Corporation and Marathon Oil Company; Order Amending Authorization to Export Liquefied Natural Gas

AGENCY: Office of Fossil Energy, DOE.

ACTION: Notice of order.

SUMMARY: The Office of Fossil Energy of the Department of Energy gives notice that it has issued an order amending the long-standing authorization granted to Phillips Alaska Natural Gas Corporation (PANGC) and Marathon Oil Company (Marathon) to export liquefied natural gas (LNG) to Japan. Specifically, the order approves a modified LNG pricing formula, in accordance with an amendment to PANGC's and Marathon's June 17, 1988, LNG purchase agreement.

This order is available for inspection and copying in the Office of Fuels Programs Docket Room, 3F–056, Forrestal Building, 1000 Independence Avenue, SW., Washington, DC 20585, (202) 586–9478. The docket room is open between the hours of 8:00 a.m. and 4:30 p.m., Monday through Friday, except Federal holidays.

Issued in Washington, DC, March 2, 1995.

Clifford P. Tomaszewski,

Director, Office of Natural Gas, Office of Fuels Programs, Office of Fossil Energy.

[FR Doc. 95–6247 Filed 3–13–95; 8:45 am]

BILLING CODE 6450–01–P

[FE Docket No 95–12–NG]

Petro-Canada Hydrocarbons Inc.; Order Granting Blanket Authorization To Import Natural Gas From Canada

AGENCY: Office of Fossil Energy, DOE.

ACTION: Notice of order.

SUMMARY: The Office of Fossil Energy of the Department of Energy gives notice that it has issued an order granting Petro-Canada Hydrocarbons Inc. authorization to import up to 150 Bcf of natural gas from Canada over a two-year term beginning on the date of the first delivery after March 3, 1995.

This order is available for inspection and copying in the Office of Fuels Programs Docket Room, 3F–056, Forrestal Building, 1000 Independence Avenue, SW., Washington, DC 20585, (202) 586–9478. The docket room is open between the hours of 8:00 a.m. and 4:30 p.m., Monday through Friday, except Federal holidays.

Issued in Washington, DC, March 1, 1995.

Clifford P. Tomaszewski,

Director, Office of Natural Gas, Office of Fuels Programs, Office of Fossil Energy.

[FR Doc. 95–6248 Filed 3–13–95; 8:45 am]

BILLING CODE 6450–01–P

ENVIRONMENTAL PROTECTION AGENCY

[HERL–RTP; FRL–5–5172–1]

Workshop on Endocrine Disruptors

AGENCY: Environmental Protection Agency.

ACTION: Notice of public meeting.

SUMMARY: The U.S. Environmental Protection Agency (EPA) is sponsoring a workshop to develop research needs to address the hypothesis that chemicals present in the environment may have adverse hormonally-mediated effects on humans and wildlife. The goals of this workshop are twofold: (1) to provide a forum for communication of information on endocrine disruptors among a diverse assembly of organizations and scientific specialities; and (2) to develop a national strategy that delineates short term and long term projects necessary for understanding the magnitude and nature of the issues related to endocrine disruptors. Specific activities will be focused on research needs related to potential effects on reproductive, immunologic, and neurologic function as well as on carcinogenic effects. How such research will be of use in the risk assessment process will be an important consideration in the deliberations.

DATES: The workshop will be held April 10–13, 1995, at the Radisson Plaza Hotel, Raleigh, North Carolina. The workshop is open to the public, although seating will be limited and advanced registration is required. Interested parties should contact Ms. Theresa Harris, U.S. Environmental Protection Agency, HERL, MD–70, Research Triangle Park, NC 27711; telephone 919–541–1133.

Dated: March 7, 1995.

Henry L. Longest II,

Acting Assistant Administrator for Research and Development.

[FR Doc. 95–6268 Filed 3–13–95; 8:45 am]

BILLING CODE 6560–50–M

[FRL–5171–7]

National Advisory Council for Environmental Policy and Technology; Public Meetings

AGENCY: Environmental Protection Agency (EPA).

ACTION: Notice of public meetings.

SUMMARY: Under the Federal Advisory Committee Act, Public Law 92–463, EPA gives notice of a two-day series of meetings involving four of the Standing Committees of the National Advisory Council for Environmental Policy and Technology (NACEPT). NACEPT provides advice and recommendations to the Administrator of EPA on a broad range of environmental policy issues. These meetings are being held to continue discussions of recommendations from these NACEPT Committees on actions EPA can take to implement Community-Based Environmental Protection.

The four NACEPT Committees that will be meeting are:

- The Ecosystems Sustainable Economies Committee—which is examining issues associated with harmonizing economic activity and ecosystem management, and is focusing on the economic, social, and political factors needed to achieve sustainable economies.
- The Ecosystems Information and Assessments Committee—which is examining the role and use of data and information in ecosystem management strategies, including data needs, data accessibility, and opportunities for partnerships and data sharing with public and private organizations.
- The Ecosystems Implementation Tools Committee—which is evaluating the opportunities to re-orient existing statutory and regulatory authorities to integrate place-driven environmental management into the Agency's decision-making processes.
- The NACEPT Executive Committee—which serves as a steering Committee for all NACEPT activities and is coordinating the efforts of the three NACEPT Ecosystems Committees.

Scheduling constraints preclude oral comments from the public during the meeting. Written comments can be submitted by mail and will be transmitted to Committee members for consideration

DATES: The public meetings will be held on Wednesday, April 12, and Thursday, April 13, 1995. The NACEPT Executive Committee will meet in plenary session from 8:30 a.m. to 12:00 p.m. on Wednesday, April 12, and again on Thursday, April 13 from 3:00 p.m. to 5:00 p.m. The Ecosystems Sustainable Economies Committee, the Ecosystems Information and Assessments Committee, and the Ecosystems Implementation Tools Committee will meet concurrently from 1:00 p.m. to 5:00 p.m. on Wednesday, April 12, and again from 8:30 a.m. to 3:00 p.m. on Thursday, April 13. On both days, the meetings will be held at the Dupont Plaza Hotel; 1500 New Hampshire Avenue, N.W., Washington, D.C.

ADDRESSES: Written comments should be sent to: Abby J. Pirnie, Director, Office of Cooperative Environmental Management, U.S. EPA (1601), 401 M. Street S.W., Washington, D.C. 20460.

FOR FURTHER INFORMATION CONTACT: Abby J. Pirnie, Designated Federal Official, Direct line (202) 260–8079, Secretary's line (202) 260–7567.

Dated: March 8, 1995.

Abby J. Pirnie,

Designated Federal Official.

[FR Doc. 95–6271 Filed 3–13–95; 8:45 am]

BILLING CODE 6560–50–M

[FRL–5171–9]

State of New York: Final Determination of Adequacy of State/Tribal Municipal Solid Waste Permit Program

AGENCY: Environmental Protection Agency.

ACTION: Notice of final determination of adequacy to fully approve the New York State Municipal Solid Waste Permit Program.

SUMMARY: Section 4005(c)(1)(B) of the Resource Conservation and Recovery Act (RCRA), as amended by the Hazardous and Solid Waste Amendments (HSWA) of 1984, requires States to develop and implement permit programs to ensure that municipal solid waste landfills (MSWLFs) which may receive hazardous household waste or small quantity generator waste will comply with the revised Federal MSWLF Criteria (40 CFR Part 258). RCRA Section 4005(c)(1)(C) requires the Environmental Protection Agency (EPA) to determine whether States have adequate ''permit'' programs for MSWLFs, but does not mandate issuance of a rule for such determinations. EPA has drafted and is in the process of proposing a State/Tribal Implementation Rule (STIR) that will provide procedures by which EPA will approve, or partially approve, State/Tribal landfill permit programs. The Agency intends to approve adequate State/Tribal MSWLF permit programs as applications are submitted. Thus, these approvals are not dependent on final promulgation of the STIR. Prior to promulgation of the STIR, adequacy determinations will be made based on the statutory authorities and requirements. In addition, States/Tribes may use the draft STIR as an aid in interpreting these requirements. The Agency believes that early approvals have an important benefit. Approved State/Tribal permit programs provide interaction between the State/Tribe and the owner/operator regarding site-specific permit conditions. Only those owners/operators located in State/Tribes with approved permit programs can use the site-specific flexibility provided by Part 258 to the extent the State/Tribal permit program allows such flexibility. EPA notes that regardless of the approval status of a State/Tribe and the permit status of any facility, the Federal landfill criteria will apply to all permitted and unpermitted MSWLF facilities.

The State of New York applied for a determination of adequacy under section 4005 of RCRA. The components of authority and capability were contained in New York State's application and its revisions. EPA reviewed New York State's application, and certain revisions thereto, and on July 28, 1994, proposed a determination that New York State's MSWLF permit program is adequate to ensure compliance with the revised MSWLF Criteria. After consideration of all comments received regarding the tentative determination of adequacy, EPA is today issuing a final determination that New York State's program is adequate.

EFFECTIVE DATE: The determination of adequacy for the New York State shall be effective on March 14, 1995.

FOR FURTHER INFORMATION CONTACT: David Savetsky, U.S. EPA Region II, Mail Stop 2AWM, Room 1006, 26 Federal Plaza, New York, New York, 10278, telephone (212) 637–4098.

SUPPLEMENTARY INFORMATION:

A. Background

On October 9, 1991, EPA promulgated revised Criteria for MSWLFs (40 CFR Part 258). Subtitle D of RCRA, as amended by the Hazardous and Solid Waste Amendments of 1984 (HSWA), requires States to develop permitting programs to ensure that facilities comply with the Federal Criteria under Part 258. Subtitle D also requires in Section 4005 that EPA determine the adequacy of State municipal solid waste landfill permit programs to ensure that facilities comply with the revised Federal Criteria. To fulfill this requirement, the Agency has drafted

and is in the process of proposing a State/Tribal Implementation Rule (STIR). The rule will specify the requirements which State/Tribal programs must satisfy to be determined adequate.

EPA intends to approve State/Tribal MSWLF permit programs prior to the promulgation of STIR. EPA interprets the requirements for States or Tribes to develop ''adequate'' programs for permits or other forms of prior approval to impose several minimum requirements. First, each State/Tribe must have enforceable standards for new and existing MSWLFs that are technically comparable to EPA's revised MSWLF criteria. Next, the State/Tribe must have the authority to issue a permit or other notice of prior approval to all new and existing MSWLFs in its jurisdiction. The State/Tribe also must provide for public participation in permit issuance and enforcement as required in Section 7004(b)(1) of RCRA. Finally, EPA believes that the State/Tribe must show that it has sufficient compliance monitoring and enforcement authorities to take specific action against any owner or operator that fails to comply with an approved MSWLF program.

EPA Regions will determine whether a State/Tribe has submitted an ''adequate'' program based on the interpretation outlined above. EPA plans to provide more specific criteria for this evaluation when it proposes the State/Tribal Implementation Rule. EPA expects States/Tribes to meet all of these requirements for all elements of a MSWLF program before it gives full approval to a MSWLF program.

On September 24, 1993, the State of New York submitted an application for adequacy determination for New York State's municipal solid waste landfill permit program. On March 14, 1994, May 10, 1994, and June 28, 1994, New York made revisions to its original submission. On July 28, 1994, after reviewing New York State application and the revised submissions, EPA published a tentative determination of adequacy for all portions of New York State's program. Further background on the tentative determination of adequacy appears at 59 FR 38463, July 28, 1993.

Along with the tentative determination, EPA announced the availability of the application for public comment. New York State's application for program adequacy determination and its revisions were available for public review and comment at the New York State Department of Environmental Conservation, in Albany New York and at the EPA Region II Library in New York City. The public comment period commenced on July 28, 1994 and ended on September 13, 1994.

Although RCRA does not require EPA to hold a hearing on any determination to approve a State/Tribe's MSWLF program, the Region scheduled two public hearings on this tentative determination. A public hearing was held in Albany New York and in New York City. A summary of the comments received, and EPA's responses thereto is contained in the public comment section of this notice.

On October 9, 1993, New York, acting through the New York State Department of Environmental Conservation, adopted comprehensive, revised regulations governing solid waste disposal. These regulations are patterned after the 40 CFR Part 258 criteria, and are intended to bring New York into full conformity with the Federal criteria. The New York State Department of Environmental Conservation has sufficient authority and responsibility for implementing and enforcing solid waste management regulations, including a permit program, inspection authority and enforcement activities.

New York does not have the statutory authority to enforce the MSWLF permit program on Indian Lands. MSWLFs located on Indian Lands are subjected to the Federal Criteria.

In addition, in its application, New York states that adequate technical, support and legal personnel will be assigned to implement its permit program.

B. Public Comment

A summary of the public comments received on the tentative determination of adequacy and EPA's responses thereto follows below. The major comments suggested the Fresh Kills landfill in Staten Island, New York is illegally operating without a permit and is continuing to operate under consent orders since 1980. The commentors believed that this demonstrates the inability of New York to effectively enforce landfill criteria. A facility not meeting Federal Criteria must be upgraded in a reasonable time to meet such criteria before or after approval of the state program. Upgrading can take place concurrent with or after state program approval. The use of enforcement tools such as consent orders as a method by which a facility is brought into compliance is not a basis for disapproving a state program. In fact, preliminary findings of an EPA study of the Fresh Kills facility compliance status indicates relatively minor violations currently exist and the facility exceeds some Federal requirements such as groundwater monitoring. In fact, we see no loss of enforcement authority by approving the State program. The State regulatory program will enhance compliance with Federal Criteria which remain in effect in any case.

EPA believes that the State has the statutory and regulatory authority to implement and enforce such a program. Many of the numerous citings of past and or continuing site-specific violations do not recognize that the State Part 360 regulations underwent a significant revision which became effective on October 9, 1993, to conform to the Federal Part 258 Criteria.

Landfill closures in New York State have been primarily a result of the State enforcement of policies and procedures for compliance with laws and regulations governing closures of active solid waste landfills. In 1984, the Commissioner of the New York State Department of Environmental Conservation formally initiated a landfill closure strategy to obtain closure of unlined landfills in the State of New York. Pursuant to the 1984 Landfill Closure Enforcement Directive and subsequent amendments of 1988, a methodical program was pursued by the NYSDEC whereby solid waste disposal facility planning and landfill closures were to be coordinated. This strategy contemplated a process of consolidation of solid waste disposal into a few regional landfills, pending planning, design and permitting of new, properly designed disposal facilities. The State's approach to solid waste compliance by New York City was in accordance with this strategy, while at the same time recognizing the need to allow for efficient and economic transition to sound solid waste management practices by the City.

There were several additional comments. These are addressed in the responsiveness summary which is made part of the public record.

C. Decision

After reviewing the public comments, I conclude that New York State's application for adequacy determination meets all of the statutory and regulatory requirements established by RCRA. Accordingly, the State of New York is granted a determination of adequacy for all portions of its municipal solid waste permit program.

Section 4005(a) of RCRA provides that citizens may use the citizen suit provisions of Section 7002 of RCRA to enforce the Federal MSWLF criteria in 40 CFR Part 258 independent of any State/Tribal enforcement program.

As EPA explained in the preamble to the final MSWLF criteria, EPA expects

that any owner or operator complying with provisions in a State/Tribal program approved by EPA should be considered to be in compliance with the Federal Criteria. See 56 FR 50978, 50995 (October 9, 1991).

Today's action takes effect on March 14, 1995. EPA believes it has good cause under section 553(d) of the Administrative Procedure Act, 5 U.S.C 553(d), to put this action into effect less than 30 days after publication in the **Federal Register**.

All of the requirements and obligations in New York State program are already in effect as a matter of law. EPA's action today does not impose any new requirements that the regulated community must begin to comply with. Nor do these requirements become enforceable by EPA as Federal law. Consequently, EPA finds that it does not need to give notice prior to making its approval effective.

Compliance with Executive Order 12866

The Office of Management and Budget has exempted this notice from the requirements of Section 6 of Executive Order 12866.

Certification Under the Regulatory Flexibility Act

Pursuant to the provisions of 5 U.S.C. 605(b), I hereby certify that this approval will not have a significant economic impact on a substantial number of small entities.

It does not impose any new burdens on small entities. This notice, therefore, does not require a regulatory flexibility analysis.

Authority: This notice is issued under the authority of Sections 2002, 4005 and 4010(c) of the Solid Waste Disposal Act as amended; 42 U.S.C. 6912, 6945, 6949a(c).

Dated: February 21, 1995.

Jeanne M. Fox,

Regional Administrator.

[FR Doc. 95–6269 Filed 3–13–95; 8:45 am]

BILLING CODE 6560–50–P

FEDERAL COMMUNICATIONS COMMISSION

Public Information Collection Requirement Submitted to Office of Management and Budget for Review

March 9, 1995.

The Federal Communications Commission has submitted the following information collection requirement to OMB for review and clearance under the Paperwork Reduction Act of 1980 (44 U.S.C. 3507).

Copies of this submission may be purchased from the Commission's copy contractor, International Transcription Service, Inc., 2100 M Street, N.W., Suite 140, Washington, DC 20037, (202) 857–3800. For further information on this submission contact Judy Boley, Federal Communications Commission, (202) 418–0214. Persons wishing to comment on this information collection should contact Timothy Fain, Office of Management and Budget, Room 10236 NEOB, Washington, DC 20503, (202) 395–3561.

Please note: The Commission has requested emergency OMB review of this item by March 17, 1995, under the provisions of 5 CFR 1320.18.

OMB Number: None
Title: Survey Governing Effects of the ''Must Carry'' Requirements
Action: New collection
Respondents: Businesses or other for-profit
Frequency of Response: One time collection
Estimated Annual Burden: 2,000 responses; .25 hours average burden per response; 500 hours total annual burden
Needs and Uses: In cooperation with the U.S. Department of Justice, the Federal Communications Commission seeks information from cable television operators in connection with pending litigation involving cable television ''must carry'' requirements (*Turner Broadcasting System* v. *FCC.* Civil Action No. 92–2247 and consolidated cases D.D.C.)). The survey asks cable operators to indicate the number of broadcast stations carried on their systems under ''must carry'' requirements or ''retransmission consent'' so that the courts are fully informed of the ''must carry'' requirements' impact.

Federal Communications Commission.

William F. Caton,

Acting Secretary.

Survey Concerning Effects of the ''Must-Carry'' Requirements

March _____, 1995.

In *Turner Broadcasting Co., Inc.* v. *FCC,* 114 S. Ct 2445 (1994), the United States Supreme Court considered the constitutionality of the ''Must-Carry'' requirements, the provisions of the Cable Television Consumer Protection and Competition Act of 1992 which require cable operators to carry local television broadcast stations on their cable systems. 47 U.S.C. §§ 534, 535. The Court did not rule on the constitutionality of Must-Carry, but returned the case to the lower court for additional inquiry into a number of issues. These include the impact of the Must-Carry requirements on cable system operators. The Court described the extent to which Must-Carry requires cable operators to make changes in their programming selections as one of several questions ''critical'' to determining whether the Must-Carry requirements are constitutional.

Accordingly, the FCC, in cooperation with the United States Department of Justice, which is defending the constitutionality of the Must-Carry requirements in the *Turner Broadcasting* case, seeks your assistance in responding to the enclosed survey questionnaire, so that the Department can more fully inform the courts of Must-Carry's impact.

Notice to Individuals Required by the Privacy Act of 1974 and the Paperwork Reduction Act

The request for information in this survey is authorized by the Communications Act of 1934, as amended. The Commission will use the information as described above. The Department of Justice will also use the information. All information provided in response to this survey will be available for public inspection. A response is requested, but your response to the survey is voluntary.

Public reporting burden for this information is estimated to average 15 minutes per response, including the time for reviewing instructions, searching existing data, gathering and maintaining the data needed, and completing and reviewing the information. Send comments regarding the burden estimate or any other aspect of this request for information, including suggestions for reducing the burden, to the Federal Communications Commission, Records Management Division, Washington, D.C. 20554, and to the Office of Management and Budget, Paperwork Reduction Project (3060–_____), Washington, D.C. 20503.

This notice is required by the Privacy Act of 1974, P.L. 93–579, Dec. 31, 1975, 5 U.S.C. § 522a(e)(3) and the Paperwork Reduction Act of 1980, P.L. 96–511, Dec. 11, 1980, 47 U.S.C. § 3507.

Please complete and return the enclosed survey form by mail or fax by April 7, 1995. Thank you for your cooperation.

For further information, please contact:

Adam Issenberg (202) 616–8476, Eric Angel (202) 514–4775, United States Dept. of Justice
Grey Pash (202) 418–1740, Federal Communications Commission, Office of General Counsel

Survey Concerning Effects of the ''Must-Carry'' Requirements

Please complete this form and return it by mail in the enclosed envelope or by fax to one of the numbers listed below no later than April 7, 1995.

Physical System Identification No.: _____

Operator:

_____

_____
_____
_____

1. How many usable activated channels are there on your cable system? (''Usable activated channels'' are the channels engineered at the headend which are generally available to residential subscribers, including channels designated for public, educational or governmental use, regardless of whether those channels are currently in use, and excluding channels that could not, for technical or safety reasons, be used for distribution of broadcast signals.) ..... 1. _____
2. How many local broadcast television stations now carried on your system are carried in fulfillment of the must-carry requirements? (This information is required by the FCC's rules to be kept in your public inspection file.) ..... 2. _____
3. Of these signals you carry because of the must-carry requirements, how many (a) noncommercial educational and (b) commercial broadcast television stations were *added* to your system *after* the date the must-carry rules became effective? (The effective date of the rules was Dec. 4, 1992 for noncommercial educational television stations and June 2, 1993 for commercial television stations.).
   Non-commercial educational stations *added* ..... 3.a. _____
   Commercial stations *added* ..... 3.b. _____
4. How many local broadcast television stations are carried on your system pursuant to retransmission consent? ..... 4. _____
5. Of the usable activated channels on your system (see explanation in No. 1 above), how many are not currently used to provide video signals to subscribers? ..... 5. _____

Return to: Federal Communications Commission, 1919 M St., N.W., Mail Stop 1400A, Washington, D.C. 20554, Attention: Must-Carry Survey, or Fax to: (202) 418–2819, (202) 418–2822.

[FR Doc. 95–6291 Filed 3–13–95; 8:45 am]

BILLING CODE 6712–01–M

Petition For Reconsideration of Action In Rulemaking Proceeding

March 7, 1995.

A petition for reconsideration has been filed in the Commission rulemaking proceeding listed in this Public Notice and published pursuant to 47 CFR 1.429(e). The full text of this document is available for viewing and copying in Room 239, 1919 M Street NW., Washington, DC or may be purchased from the Commission's copy contractor ITS, Inc. (202) 857–3800. Opposition to this petition must be filed on or before March 29, 1995.

See § 1.4(b)(1) of the Commission's rules (47 CFR 1.4(b)(1)). Replies to an opposition must be filed within 10 days after the time for filing oppositions has expired.

SUBJECT: In the Matter of Authority to Issue Subpoenas (FCC 94–319).

FILED BY: Mark J. Golden, Vice President of The Personal Communications Industry Association on January 26, 1995.

Federal Communications Commission.

William F. Caton,

Acting Secretary.

[FR Doc. 95–6162 Filed 3–13–95; 8:45 am]

BILLING CODE 6712–01–M

FEDERAL RESERVE SYSTEM

John Ashley Dukes; Change in Bank Control Notice

Acquisition of Shares of Banks or Bank Holding Companies

The notificant listed below has applied under the Change in Bank Control Act (12 U.S.C. 1817(j)) and § 225.41 of the Board's Regulation Y (12 CFR 225.41) to acquire a bank or bank holding company. The factors that are considered in acting on notices are set forth in paragraph 7 of the Act (12 U.S.C. 1817(j)(7)).

The notice is available for immediate inspection at the Federal Reserve Bank indicated. Once the notice has been accepted for processing, it will also be available for inspection at the offices of the Board of Governors. Interested persons may express their views in writing to the Reserve Bank indicated for the notice or to the offices of the Board of Governors. Comments must be received not later than March 28, 1995.

A. Federal Reserve Bank of Atlanta (Zane R. Kelley, Vice President) 104 Marietta Street, N.W., Atlanta, Georgia 30303:

1. John Ashley Dukes, Jesup, Georgia; to acquire an additional .03 percent, for a total of 10.02 percent, of the voting shares of Wayne Bancorp. Inc., Jesup, Georgia, and thereby indirectly acquire Wayne National Bank, Jesup, Georgia.

Board of Governors of the Federal Reserve System, March 8, 1995.

Jennifer J. Johnson,

Deputy Secretary of the Board.

[FR Doc. 95–6200 Filed 3–13–95; 8:45 am]

BILLING CODE 6210–01–F

Farmington Bancorp; Change in Bank Control Notices; Acquisitions of Shares of Banks or Bank Holding Companies; Correction

This notice corrects a notice (FR Doc. 95-4351) published on page 10082 of the issue for Thursday, February 23, 1995.

Under the Federal Reserve Bank of of San Francisco heading, the entry for Farmington Bancorp, is revised to read as follows:

1. Farmington Bancorp, Seattle, Washington, and Farmington Finance Corporation, Hong Kong; to become bank holding companies by acquiring 100 percent of the voting shares of Farmington State Bank, Farmington, Washington.

Comments on this application must be received by March 17, 1995.

Board of Governors of the Federal Reserve System, March 8, 1995.

Jennifer J. Johnson,

Deputy Secretary of the Board.

[FR Doc. 95–6201 Filed 3–13–95; 8:45 am]

BILLING CODE 6210–01–F

GreatBanc, Inc., et al.; Formations of; Acquisitions by; and Mergers of Bank Holding Companies

The companies listed in this notice have applied for the Board's approval under section 3 of the Bank Holding Company Act (12 U.S.C. 1842) and § 225.14 of the Board's Regulation Y (12 CFR 225.14) to become a bank holding company or to acquire a bank or bank holding company. The factors that are considered in acting on the applications are set forth in section 3(c) of the Act (12 U.S.C. 1842(c)).

Each application is available for immediate inspection at the Federal Reserve Bank indicated. Once the application has been accepted for processing, it will also be available for inspection at the offices of the Board of

Governors. Interested persons may express their views in writing to the Reserve Bank or to the offices of the Board of Governors. Any comment on an application that requests a hearing must include a statement of why a written presentation would not suffice in lieu of a hearing, identifying specifically any questions of fact that are in dispute and summarizing the evidence that would be presented at a hearing.

Unless otherwise noted, comments regarding each of these applications must be received not later than April 7, 1995.

A. Federal Reserve Bank of Chicago (James A. Bluemle, Vice President) 230 South LaSalle Street, Chicago, Illinois 60690:

1. GreatBanc, Inc., Aurora, Illinois; to acquire 54.5 percent of the voting shares of GreatBank, Algonquin, Illinois, a *de novo* bank.

B. Federal Reserve Bank of Kansas City (John E. Yorke, Senior Vice President) 925 Grand Avenue, Kansas City, Missouri 64198:

1. Armstrong Bancshares, Inc., Vian, Oklahoma; to become a bank holding company by acquiring 100 percent of the voting shares of Vian State bank, Vian, Oklahoma.

2. Western Oklahoma Financial Services, Inc., Elk City, Oklahoma; to become a bank holding company by acquiring 100 percent of the voting shares of First National Bank, Elk City, Oklahoma.

Board of Governors of the Federal Reserve System, March 8, 1995.

Jennifer J. Johnson,

Deputy Secretary of the Board.

[FR Doc. 95–6202 Filed 3–13–95; 8:45 am]

BILLING CODE 6210–01–F

HSBC Holdings plc and HSBC Holdings BV; Application to Engage in Nonbanking Activities

HSBC Holdings plc, London, England, and HSBC Holdings BV, Amsterdam, The Netherlands (Applicants), have applied pursuant to section 4(c)(8) of the Bank Holding Company Act (12 U.S.C. 1843(c)(8)) (BHC Act) and section 225.23 of the Board's Regulation Y (12 CFR 225.23), to engage *de novo* through their wholly owned subsidiary, James Capel Incorporated, New York, New York (Company), in the following nonbanking activities:

(1) Providing investment and financial advice, pursuant to § 225.25(b)(4) of Regulation Y;

(2) Providing securities brokerage service on a discount and full-service basis, pursuant to § 225.25(b)(15) of Regulation Y;

(3) Acting as agent in the private placement of all types of securities, and providing related advisory services; and

(4) Purchasing and selling all types of securities on the order of customers as a ''riskless principal.''

Applicant seeks approval to conduct the proposed activities throughout the United States.

Section 4(c)(8) of the BHC Act provides that a bank holding company may, with Board approval, engage in any activity ''which the Board after due notice and opportunity for hearing has determined (by order or regulation) to be so closely related to banking or managing or controlling banks as to be a proper incident thereto.'' 12 U.S.C. § 1843(c)(8). In determining whether a proposed activity is closely related to banking for purposes of the BHC Act, the Board considers, *inter alia*, the criteria set forth in *National Courier Association v. Board of Governors of the Federal Reserve System*, 516 F.2d 1229 (D.C. Cir. 1975). These considerations are: (1) whether banks generally have in fact provided the proposed services; (2) whether banks generally provide services that are operationally or functionally so similar to the proposed services as to equip them particularly well to provide the proposed services; and (3) whether banks generally provide services that are so integrally related to the proposed services as to require their provision in a specialized form. *See* 516 F.2d at 1237. In addition, the Board may consider any other basis that may demonstrate that the activity has a reasonable or close relationship to banking or managing or controlling banks. *Board Statement Regarding Regulation Y*, 49 Federal Register 806 (1984).

Applicant states that the Board previously has determined by regulation that some of the proposed activities, when conducted within limitations established by the Board, are closely related to banking for purposes of section 4(c)(8) of the BHC Act. *See* 12 CFR 225.25(b)(4) (providing investment and financial advice); 12 CFR 225.25(b)(15) (providing securities brokerage service on a discount and full-service basis).

Applicant also states that the Board has determined by order that the remaining proposed activities, when conducted within the limitations established by the Board in its previous orders, are closely related to banking. *See J.P. Morgan & Co. Incorporated*, 76 Federal Reserve Bulletin 26 (1990) and *Bankers Trust New York Corporation*, 75 Federal Reserve Bulletin 829 (1989) (private placement and riskless principal activities).

Applicant maintains that Company would conduct the foregoing, previously approved activities in conformity with the conditions and limitations established by the Board in prior cases.

In order to approve the proposal, the Board must determine that the proposed activities to be conducted by Company ''can reasonably be expected to produce benefits to the public, such as greater convenience, increased competition, or gains in efficiency, that outweigh possible adverse effects, such as undue concentration of resources, decreased or unfair competition, conflicts of interests, or unsound banking practices.'' 12 U.S.C. 1843(c)(8).

Applicant believes that the proposal will produce public benefits that outweigh any potential adverse effects. In particular, Applicant maintains that the proposal will enhance competition and efficiency. In addition, Applicant states that the proposed activities will not result in adverse effects such as an undue concentration of resources, decreased or unfair competition, conflicts of interest, or unsound banking practices.

In publishing the proposal for comment, the Board does not take a position on issues raised by the proposal. Notice of the proposal is published solely in order to seek the views of interested persons on the issues presented by the application, and does not represent a determination by the Board that the proposal meets or is likely to meet the standards of the BHC Act.

Any comments or requests for hearing should be submitted in writing and received by William W. Wiles, Secretary, Board of Governors of the Federal Reserve System, Washington, D.C. 20551, on or before March 28, 1995. Any request for a hearing on this application must, as required by § 262.3(e) of the Board's Rules of Procedure (12 CFR 262.3(e)), be accompanied by a statement of the reasons why a written presentation would not suffice in lieu of a hearing, identifying specifically any questions of fact that are in dispute, summarizing the evidence that would be presented at a hearing, and indicating how the party commenting would be aggrieved by approval of the proposal.

This application may be inspected at the offices of the Board of Governors or the Federal Reserve Bank of New York.

Board of Governors of the Federal Reserve System, March 8, 1995.

Jennifer J. Johnson,

Deputy Secretary of the Board.

[FR Doc. 95–6203 Filed 3–13–95; 8:45 am]

BILLING CODE 6210–01–F

Sequatchie Valley Bancshares, Inc.; Notice of Application to Engage de novo in Permissible Nonbanking Activities

The company listed in this notice has filed an application under § 225.23(a)(1) of the Board's Regulation Y (12 CFR 225.23(a)(1)) for the Board's approval under section 4(c)(8) of the Bank Holding Company Act (12 U.S.C. 1843(c)(8)) and § 225.21(a) of Regulation Y (12 CFR 225.21(a)) to commence or to engage *de novo*, either directly or through a subsidiary, in a nonbanking activity that is listed in § 225.25 of Regulation Y as closely related to banking and permissible for bank holding companies. Unless otherwise noted, such activities will be conducted throughout the United States.

The application is available for immediate inspection at the Federal Reserve Bank indicated. Once the application has been accepted for processing, it will also be available for inspection at the offices of the Board of Governors. Interested persons may express their views in writing on the question whether consummation of the proposal can ''reasonably be expected to produce benefits to the public, such as greater convenience, increased competition, or gains in efficiency, that outweigh possible adverse effects, such as undue concentration of resources, decreased or unfair competition, conflicts of interests, or unsound banking practices.'' Any request for a hearing on this question must be accompanied by a statement of the reasons a written presentation would not suffice in lieu of a hearing, identifying specifically any questions of fact that are in dispute, summarizing the evidence that would be presented at a hearing, and indicating how the party commenting would be aggrieved by approval of the proposal.

Comments regarding the application must be received at the Reserve Bank indicated or the offices of the Board of Governors not later than March 28, 1995.

A. Federal Reserve Bank of Atlanta (Zane R. Kelley, Vice President) 104 Marietta Street, N.W., Atlanta, Georgia 30303:

1. Sequatchie Valley Bancshares, Inc., Chattanooga, Tennessee; to engage *de novo* through its subsidiary Tennessee Business and Industrial Development Corporation, Chattanooga, Tennessee, in community development activities, pursuant to § 225.25(b)(6) of the Board's Regulation Y. The proposed activity will be conducted throughout the state of Tennessee.

Board of Governors of the Federal Reserve System, March 8, 1995.

Jennifer J. Johnson,

Deputy Secretary of the Board.

[FR Doc. 95–6204 Filed 3–13–95; 8:45 am]

BILLING CODE 6210–01–F

DEPARTMENT OF HEALTH AND HUMAN SERVICES

Administration on Aging

White House Conference on Aging Advisory Committee on Disability; Notice of Establishment

Pursuant to Public Law 92–463, the Federal Advisory Committee Act, the Department of Health and Human Services announces the establishment by the Secretary of the White House Conference on Aging Advisory Committee on Disabilities.

The Committee shall advise and make recommendations with respect to disability issues to the Secretary and the Assistant Secretary for Aging to assist in planning and conducting the Conference and in reviewing the resolutions produced by the Conference delegates.

The Committee shall terminate on September 30, 1995.

Dated: March 8, 1995.

Fernando M. Torres-Gil,

Assistant Secretary for Aging.

[FR Doc. 95–6190 Filed 3–13–95; 8:45 am]

BILLING CODE 4130–02–M

White House Conference on Aging Business Advisory Committee; Notice of Establishment

Pursuant to Public Law 92–463, the Federal Advisory Committee Act, the Department of Health and Human Services announces the establishment by the Secretary of the White House Conference on Aging Business Advisory Committee.

The Committee shall advise and make recommendations with respect to business issues to the Secretary and the Assistant Secretary for Aging to assist in planning and conducting the Conference and in reviewing the resolutions produced by the Conference delegates.

The Committee shall terminate on September 30, 1995.

Dated: March 8, 1995.

Fernando M. Torres-Gil,

Assistant Secretary for Aging.

[FR Doc. 95–6191 Filed 3–13–95; 8:45 am]

BILLING CODE 4130–02–M

DEPARTMENT OF HEALTH AND HUMAN SERVICES

Administration for Children and Families

Administration on Children, Youth and Families

[Program Announcement No. ACF–93588.951–A]

DEPARTMENT OF EDUCATION

Office of Elementary and Secondary Education

Safe and Drug Free Schools Program; The Community Schools Youth Services and Supervision Grant Program, and

The Family and Community Endeavor Schools Grant Program; Availability of Fiscal Year (FY) 1995 Funds and Request for Applications; Correction

AGENCIES: Administration for Children and Families (ACF), Department of Health and Human Services (HHS), and the Office of Elementary and Secondary Education (OESE), Department of Education (ED).

ACTION: Correction Notice to amend the announcement of the availability of funds and request for applications under the Family and Community Endeavor School Grant Program.

SUMMARY: This Notice will correct several items in Program Announcement No. ACF–93588.951, prepared by the Family and Youth Services Bureau of the ACYF and the Safe and Drug Free Schools Program of the Office of Elementary and Secondary Education and published in the March 6, 1995 **Federal Register** Notice (60 FR 12332).

Part II of the announcement describes the three priority areas under which application may be made. In the Table of Contents and in the body of the announcement, Part II, subparts D, E, F, and G were mistakenly identified as ''Priority Areas''. Only subparts A, B, and C of Part II are priority areas under which applications may be submitted. Subparts D through G provide supplemental information and are *not* priority areas.

DATES: The closing date for receipt of applications under this announcement

is May 5, 1995. Please note that this is a departure from the traditional approach of using postmarks instead of receipt date to determine eligibility of applications for review.

ADDRESSES: Application receipt: Department of Health and Human Services, ACF Division of Discretionary Grants, 370 L'Enfant Promenade, S.W., Washington, D.C. 20447. Attn: ACF–93588.951–A.

FOR FURTHER INFORMATION ON THE COMMUNITY SCHOOLS PROGRAM CONTACT: Department of Health and Human Services, AC/ACYF, Family and Youth Services Bureau, P.O. Box 1182, Washington, D.C. 20013. Telephone (202) 205–8076. Information is also available on the ACF Electronic Bulletin Board. To access, set modem to No Parity, 8 Data Bits, 1 Stop Bit and dial 1–800–627–8886. Under ''Program Office Subsystems, Family and Youth Services Bureau,'' relevant files are found under COMMSCH.

FOR FURTHER INFORMATION ON THE FACES PROGRAM CONTACT: Department of Education, OESE, Safe and Drug Free Schools Program, 600 Independence Avenue, S.W., Washington, D.C. 20202. Telephone (202) 260–3954.

Catalog of Federal Domestic Assistance Number 84.285A for the FACES Program and Number 93.588 for the Community School Program.)

Dated: March 7, 1995.

Olivia A. Golden,

Commissioner, Administration on Children, Youth and Families.

[FR Doc. 95–6252 Filed 3–13–95; 8:45 am]

BILLING CODE 4184–01–P

Centers for Disease Control and Prevention

Disease, Disability, and Injury Prevention and Control Special Emphasis Panel (SEP): Cooperative Agreements for National/Regional Minority Organization Human Immunodeficiency Virus (HIV)/Sexually Transmitted Diseases (STD) Prevention, Immunization, and Tuberculosis (TB) Projects-Program Announcement 305b: Meeting

In accordance with section 10(a)(2) of the Federal Advisory Committee Act (Pub. L. 92–463), the Centers for Disease Control and Prevention (CDC) announces the following committee meeting.

Name: Disease, Disability, and Injury Prevention and Control SEP: Cooperative Agreements for National/Regional Minority Organization HIV/STD Prevention, Immunization, and TB Projects-Program Announcement 305b.

Time and Date: 8:30 a.m.-4:30 p.m., April 18, 1995.

Place: Corporate Square, Building 11, Room 2320, Corporate Square Boulevard, Atlanta, Georgia 30329.

Status: Closed.

Matters to be Discussed: The meeting will include the review, discussion, and evaluation of applications received in response to Program Announcement 305b. The applications being reviewed include information of a confidential nature, including personal information concerning individuals associated with the applications.

The meeting will be closed to the public in accordance with provisions set forth in section 552b(c) (4) and (6), Title 5 U.S.C., and the Determination of the Associate Director for Management and Operations, CDC, pursuant to Public Law 92–463.

Contact Person for More Information: John R. Lehnherr, Chief, Resource Analysis Office (E07), National Center for Prevention Services, CDC, Corporate Square, Corporate Square Boulevard, Atlanta, Georgia 30329, telephone 404/639–8023.

Dated: March 7, 1995.

Arthur C. Jackson,

Associate Director for Management and Operations, Centers for Disease Control and Prevention (CDC).

[FR Doc. 95–6236 Filed 3–13–95; 8:45 am]

BILLING CODE 4163–18–M

Food and Drug Administration

Comparing Treatments: Safety, Effectiveness, and Cost-Effectiveness; Notice of Meeting

AGENCY: Food and Drug Administration, HHS.

ACTION: Notice.

SUMMARY: The Food and Drug Administration (FDA) is announcing that it is holding a meeting to explore methodological and regulatory issues in the design and review of studies intended to show differences or similarities among active drug and biological therapies. As the pharmaceutical marketplace evolves, there are new pressures on the developers of drug/biological products to demonstrate comparative effects. This meeting will examine the needs for this type of information, how the pharmaceutical industry is responding to new demands for comparative information, case-study experience ruling out biases in study design, the use of observational studies, methodological concerns in effectiveness trials, and promotional considerations. The study will examine issues concerning evaluation of safety, effectiveness, and cost-effectiveness.

DATES: The meeting will be held on Thursday, March 23, 1995, 8 a.m. to 5:30 p.m., and on Friday, March 24, 1995, 8:30 a.m. to 5 p.m.

ADDRESSES: The meeting will be held at the National Institutes of Health, Clinical Center, Bldg. 10, Jack Masur Auditorium, 9000 Rockville Pike, Bethesda, MD. Copies of the transcript of the meeting will be available from the contact person listed below. There is no registration fee for this meeting. Interested persons are encouraged to register early because space is limited.

FOR FURTHER INFORMATION CONTACT: Regarding information concerning the meeting and registration forms: Louis A. Morris, Center for Drug Evaluation and Research (HFD–240), Food and Drug Administration, 5600 Fishers Lane, Rockville, MD 20857, 301–594–6812, FAX 301–594–6759.

Dated: March 8, 1995.

William B. Schultz,

Deputy Commissioner for Policy.

[FR Doc. 95–6199 Filed 3–13–95; 8:45 am]

BILLING CODE 4160–01–F

Health Resources and Services Administration

Rural Regional Trauma and Emergency Medical Services System Demonstration Grant Project in South Central Florida

AGENCY: Health Resources and Services Administration, Public Health Service, Department of Health and Human Services.

ACTION: Notice of extension of application due date.

SUMMARY: This notice extends the application due date for a Rural Regional Trauma and Emergency Medical Services (EMS) Demonstration Grant Project in South Central Florida. The application due date for the South Central Florida project is extended to May 15, 1995. All other aspects of the February 15, 1995 Federal Register Notice remain the same.

Dated: March 9, 1995.

Ciro V. Sumaya,

Administrator.

[FR Doc. 95–6198 Filed 3–13–95; 8:45 am]

BILLING CODE 4160–15–M

National Institutes of Health

National Institute of General Medical Sciences; Notice of Closed Meeting

Pursuant to Section 10(d) of the Federal Advisory Committee Act, as amended (5 U.S.C. Appendix 2), notice is hereby given of the following meeting:

Commitee Name: National Institute of General Medical Sciences, Special Emphasis Panel—Minority Biomedical Research Support and Undergraduate Program Expertise.

Date: March 28.

Time: 1 p.m.—adjournment.

Place: Holiday Inn, 348 N. Dupont Highway, Dover, DE 19901.

Contact Person: Dr. Bruce Wetzel, Scientific Review Administrator, NIGMS, 45 Center Drive, Room 1AS–19K, Bethesda, MD 20892–6200.

Purpose: To review and evaluate grant applications.

This meeting will be closed in accordance with the provisions set forth in secs. 552b(c)(4) and 552b(c)(6), Title 5, U.S.C. The discussions of these applications could reveal confidential trade secrets or commercial property such as patentable material and personal information concerning individuals associated with the applications, the disclosure of which would constitute a clearly unwarranted invasion of personal privacy.

This notice is being published less than fifteen days prior to the meeting due to the urgent need to meet timing limitations imposed by the grant review cycle.

(Catalog of Federal Domestic Assistance Program Nos. 93.821, Biophysics and Physiological Sciences; 93.859, Pharmacological Sciences; 93.862, Genetics Research; 93.863, Cellular and Molecular Basis of Disease Research; 93.880, Minority Access Research Careers [MARC]; and 93.375, Minority Biomedical Research Support [MBRS].

Dated: March 8, 1995.

Susan K. Feldman,

Committee Management Officer, NIH.

[FR Doc. 95–6186 Filed 3–13–95; 8:45 am]

BILLING CODE 4140–01–M

National Institute of Allergy and Infectious Diseases; Notice of Meeting: Chronic Fatigue Syndrome Interagency Coordinating Committee; Public Meeting

Notice is hereby given of the public meeting of the Chronic Fatigue Syndrome (CFS) Interagency Coordinating Committee, Department of Health and Human Services, on April 12, 1995 at the Hubert H. Humphrey Building, Room 729G, 200 Independence Avenue, SW, Washington, DC.

The meeting will be open to the public from noon to 3 p.m., on April 12, to discuss the current CFS activities and future plans of the various member agencies. It will be chaired by the Assistant Secretary for Health. During the meeting there will be an opportunity for interested persons to present information and views on issues related to CFS. Attendance by the public will be limited only by space available.

If you plan to attend the meeting, please provide your name, organization, address, telephone and FAX numbers to Dr. John La Montagne, Co-Chair, Chronic Fatigue Syndrome Interagency Coordinating Committee, Division of Microbiology and Infectious Diseases, National Institute of Allergy and Infectious Diseases, National Institutes of Health, Solar Building, Room 3A18 MSC 7630, Bethesda, MD 20892–7630. Telephone: 301–496–1884, FAX: 301–480–4528. If you also plan to make a presentation, please notify Dr. La Montagne. The time available will be allocated among the individuals who request an opportunity for a presentation (limited to five minutes). Formal written statements (five copies) may be presented to the Chair on the day of the meeting for inclusion in the minutes.

Dated: March 2, 1995.

Anthony S. Fauci,

Director, NIAID, NIH.

[FR Doc. 95–6188 Filed 3–13–95; 8:45 am]

BILLING CODE 4140–01–M

Division of Research Grants; Notice of Closed Meetings

Pursuant to Section 10(d) of the Federal Advisory Committee Act, as amended (5 U.S.C. Appendix 2), notice is hereby given of the following Division of Research Grants Special Emphasis Panel (SEP) meetings:

Purpose/Agenda

To review Small Business Innovation Research Program grant applications.

Name of SEP: Behavioral and Neurosciences.

Date: April 14, 1995.

Time: 9 a.m.

Place: Holiday Inn, Chevy Chase, MD.

Contact Person: Dr. A. Keith Murray, Scientific Review Admin., 5333 Westbard Ave., Room 325, Bethesda, MD 20892, (301) 594–7145.

Purpose/Agenda

To review individual grant applications

Name of SEP: Microbiological and Immunological Sciences.

Date: March 23, 1995.

Time: 1 p.m.

Place: NIH, Westwood Building, Room 406B, Telephone Conference.

Contact Person: Dr. Gil Meier, Scientific Review Administrator, 5333 Westbard Ave., Room 406B, Bethesda, MD 20892, (301) 594–7118.

Name of SEP: Microbiological and Immunological Sciences.

Date: March 27, 1995.

Time: 1 p.m.

Place: NIH, Westwood Building, Room 406B, Telephone Conference.

Contact Person: Dr. Gil Meier, Scientific Review Administrator, 5333 Westbard Ave., Room 406B, Bethesda, MD 20892, (301) 594–7118.

Name of SEP: Microbiological and Immunological Sciences.

Date: March 28, 1995.

Time: 1 p.m.

Place: NIH, Westwood Building, Room 406B, Telephone Conference.

Contact Person: Dr. Gil Meier, Scientific Review Administrator, 5333 Westbard Ave., Room 406B, Bethesda, MD 20892, (301) 594–7118.

Name of SEP: Microbiological and Immunological Sciences.

Date: March 29, 1995.

Time: 1 p.m.

Place: Holiday Inn, Chevy Chase, MD.

Contact Person: Dr. Gil Meier, Scientific Review Administrator, 5333 Westbard Ave., Room 406B, Bethesda, MD 20892, (301) 594–7118.

Name of SEP: Microbiological and Immunological Sciences.

Date: March 30, 1995.

Time: 1:30 p.m.

Place: NIH, Westwood Building, Room 406B, Telephone Conference.

Contact Person: Dr. Gil Meier, Scientific Review Administrator, 5333 Westbard Ave., Room 406B, Bethesda, MD 20892, (301) 594–7118.

Name of SEP: Microbiological and Immunological Sciences.

Date: March 31, 1995.

Time: 1 p.m.

Place: NIH, Westwood Building, Room 406B, Telephone Conference.

Contact Person: Dr. Gil Meier, Scientific Review Administrator, 5333 Westbard Ave., Room 406B, Bethesda, MD 20892, (301) 594–7118.

Name of SEP: Multidisciplinary Sciences.

Date: April 3, 1995.

Time: 9 a.m.

Place: NIH, Westwood Bulding, Room 437, Telephone Conference.

Contact Person: Dr. Paul Parakkal, Scientific Review Admin., 5333 Westbard Ave., Room 437, Bethesda, MD 20892, (301) 594–7258.

The meetings will be closed in accordance with the provisions set forth in sections 552b(c)(4) and 552b(c)(6), Title 5, U.S.C. Applications and/or proposals and the discussions could reveal confidential trade secrets or commercial property such as patentable material and personal information concerning individuals associated with the applications and/or proposals, the disclosure of which would constitute a clearly unwarranted invasion of personal privacy.

This notice is being published less than 15 days prior to the meeting due to the urgent need to meet timing limitations imposed by the grant review cycle.

(Catalog of Federal Domestic Assistance Program Nos. 93.306, 93.333, 93.337, 93.393–93.396, 93.837–93.844, 93.846–93.878, 93.892, 93.893. National Institutes of Health, HHS)

Dated: March 8, 1995.

Susan K. Feldman,

Committee Management Officer, NIH.

[FR Doc. 95–6187 Filed 3–13–95; 8:45 am]

BILLING CODE 4140–01–M

DEPARTMENT OF THE INTERIOR

Bureau of Land Management

[CO–070–5101–CO12]

Notice of Intent To Prepare an Environmental Assessment (EA) and Notice To Scoping Meetings, and, if Determined To Be Necessary, Prepare an Environmental Impact Statement (EIS) on a Proposed Replacement Raw Water Pipeline in Mesa County, CO

AGENCY: Bureau of Land Management, Interior.

ACTION: Notice of Intent to Prepare an Environmental Assessment (EA), and Notice to Scoping Meetings, and, if determined to be necessary, prepare an Environmental Impact Statement (EIS) on a Proposed Replacement Raw Water Pipeline in Western Colorado.

SUMMARY: Pursuant to section 102(2)(C) of the National Environmental Policy Act of 1969 (NEPA), the Grand Junction Resource Area Office, Grand Junction District, will be directing the preparation of a NEPA document. The NEPA document will be initiated as an EA, with the understanding that it may be upgraded to an EIS. The document will be prepared by a third party contractor, and will address impacts of the Plateau Creek Pipeline Replacement project proposed by the Ute Water Conservancy District (Ute Water). The project is a raw water conveyance system proposed on private and public lands in Mesa County, Colorado to replace a deteriorated and under sized pipeline currently approved under BLM ROW grant C 081282.

DATES: Written comments will be accepted until 4:00 p.m., MST, on April 13, 1995. A public scoping meeting will be held at 7:00 p.m. on March 29, 1995, at the Two Rivers Convention Center, 159 Main Street, Grand Junction, Colorado.

ADDRESSES: Comments should be sent to the Grand Junction Area Manager, Bureau of Land Management, 2815 H Road, Grand Junction, CO 81506, ATTN: Plateau Creek Pipeline Replacement Project.

FOR FURTHER INFORMATION CONTACT: Dave Stevens, (303) 244–3009.

SUPPLEMENTARY INFORMATION: The existing Plateau Creek Pipeline is an essential part of the Ute Water system which provides water to more than 55,000 Grand Valley residents. The Ute Water service area includes most of the Grand Valley area surrounding the City of Grand Junction, Colorado, and extends from east of the Town of Palisade to within 5 miles of the Colorado-Utah stateline. Ute Water is a political subdivision of the State of Colorado formed under the Water Conservancy Act of 1937, and is considered to be a quasi-municipal entity.

The existing prestressed concrete pipe was installed in the early 1960s. A pipeline consisting of 42-inch and 36-inch diameter pipe carries raw water for approximately 4.5 miles from the Lower Molina Power Plant tail race to two storage reservoirs. From the reservoirs, water is conveyed via a 24-inch-diameter pipeline approximately 14 miles along Plateau Creek Canyon and adjacent to Interstate Highway 70 to Ute Water's treatment plant located on Rapid Creek, near the Town of Palisade. As of 1994, the pipeline was no longer able to provide an adequate flow rate to meet the peak day customer demands. The pipeline is presently subject to frequent breaks due to deteriorated pipe condition, and is unreliable due to its location within geologic hazards and stream erosion areas. In order for Ute Water to meet its commitment of providing a reliable, cost effective, high quality water source, replacement of the pipeline is necessary. The pipeline size and capacity will be determined from independent water demand projections based on population estimates to be generated and documented as part of this effort.

Ute Water has preliminary scoping to: (1) identify interested stakeholders and agencies, (2) define key issues, and (3) identify initial alternatives. On the basis of the preliminary scoping, 16 alternatives were developed. These include seven alternatives along the Plateau Creek corridor, three different alternatives involving use of water from nearby utilities, a Colorado River pump station alternative, two alternatives for supplying water from the Kannah Creek watershed, two alternatives for supplying water from the Whitewater Creek watershed, and a No Action alternative. Groundwater alternatives and conservation actions will be addressed in the EA. Four of the initially considered alternatives, selected on the basis of screening criteria described in Section 404(b) of the Clean Water Act, are proposed for evaluation in the EA. These are:

Alternative A—Replacement of the pipeline on an alignment parallel to Plateau Creek such that impacts to all resources are minimized.

Alternative B—Replacement of the pipeline parallel to Plateau Creek entirely within the existing state highway 65 and 330 rights-of-way.

Alternative C—Replacement of the pipeline in either alignment A or B with a smaller pipeline. This alternative includes provisions for construction of a booster station at the mouth of Plateau Canyon to be built at a future date to meet long-term demands.

Alternative D—A ''no federal action'' alternative.

Major issues identified during the preliminary scoping include: (1) wetlands and riparian areas, (2) threatened and endangered species, (3) wildlife habitat, (4) need for demand projections, and (5) water depletion issues. Preliminary review by the Bureau of Land Management (BLM), Fish and Wildlife Service (FWS), and Army Corps of Engineers (ACOE) indicates that the anticipated impacts may be entirely mitigable, and may be limited to temporary disturbance. However, there is a potential that significant impacts may be identified during the EA process and it may be necessary to convert this documentation effort into an EIS. Therefore, it is also the intent of this NOI to provide for public notice and review necessary for an EIS pursuant to NEPA.

The tentative project schedule is:

Begin Public Comment Period—March 1995
Complete Final EA—January 1996
EA Finding—March 1996
Complete Final Design—January 1997
Begin Construction—March 1997

The BLM's scoping process will include: (1) Identification of additional issues to be addressed; (2) Identification of additional viable alternatives, and (3) Notification of interested groups, individuals and agencies so that additional information concerning these issues can be obtained.

The scoping process will be initiated by publication of this NOI in the **Federal Register** and issuance of a news release announcing the start of the process; letters of invitation to participate in the scoping process, and distribution of a scoping document describing the proposed action, alternatives and significant issues being considered is available upon request.

Mark T. Morse,

District Manager.

[FR Doc. 95–6280 Filed 3–13–95; 8:45 am]

BILLING CODE 4310–JB–M

Minerals Management Service

One-Year Provisional Approval Period of Arco's Safety System Training Program (SIM STATION for Interactive Video Training and Simulation)

AGENCY: Minerals Management Service, Interior.

ACTION: Notice.

SUMMARY: This notice announces a 1-year provisional approval of Arco's Production Safety System Training Program (SIM STATION for Interactive Video Training and Simulation). The Minerals Management Service (MMS) is announcing the approval of this program to inform the public about evolving training technology. The program offers a unique learning system that uses computerized enactments of real-life situations to enhance learning.

FOR FURTHER INFORMATION CONTACT: Joseph R. Levine, Chief, Information and Training Branch; Mail Stop 4810; Minerals Management Service; 381 Elden Street; Herndon, Virginia 22070–4817; telephone (703) 787–1033; FAX (703) 787–1575.

SUPPLEMENTARY INFORMATION: On January 24, 1991 (56 FR 2679), MMS amended the rules to revise the minimum training requirements for personnel engaged in drilling and production operations in the Outer Continental Shelf (OCS) and established new minimum training requirements for personnel engaged in well-completion, well-workover, and well-servicing operations in the OCS. These requirements were effective on February 25, 1991. After February 24, 1993, MMS required training organizations to submit training programs in accordance with the requirements in 30 CFR part 250, subpart O.

The reason for this notice is to announce the 1-year provisional approval of Arco's Production Safety System Training Program (SIM STATION for Interactive Video Training and Simulation). Unlike traditional classroom based training programs, Arco based its program on interactive computer and laser disc based technology. This program allows the unassisted training of individual workers. The system provides for instruction, simulation, and testing.

Arco will administer the MMS certification test through a Training Administrator (TA). The TA is a company designated person who will provide a student with all the material for Production Safety System Training. During a training course the TA will be available to answer any questions the students have about the course material.

During this 1-year provisional approval period, MMS will conduct onsite evaluations and unannounced audits of the training program at Arco's shorebase facilities located in Ingleside, Texas, and Venice, Louisiana.

The MMS will conduct these onsite evaluations and unannounced audits to evaluate the operation of the training program to observe the student's ability to interact with the system.

The MMS granted a 1-year provisional approval of the training program under the departure provisions of 30 CFR 250.210(h) which states that, ''Departures. The MMS may approve departures from these requirements when it is determined that such departure will not result in a reduction of the qualifications of personnel and that the departure is necessary due to unavoidable circumstances that make compliance with the requirements infeasible or impractical.'' Final approval will be contingent upon MMS' assessment of the effectiveness of this type of training in fulfilling the requirements of subpart O.

Dated: March 7, 1995.

Thomas Gernhofer,

Associate Director for Offshore Minerals Management.

[FR Doc. 95–6185 Filed 3–13–95; 8:45 am]

BILLING CODE 4310–MR–M

National Park Service

Maine Acadian Culture Preservation Commission; Notice of Meeting

Notice is hereby given in accordance with the Federal Advisory Committee Act (Pub. L. 92–463) that the Maine Acadian Culture Preservation Commission will meet on Friday, April 7, 1995. The meeting will convene at 7:00 p.m. in the All-purpose Room in the Physical Education Building on the campus of the University of Maine at Fort Kent, Aroostook County, Maine. The Physical Education Building (Gym) is located off Pleasant Street, near U.S. Route 1 in Fort Kent.

The eleven-member Maine Acadian Culture Preservation Commission was appointed by the Secretary of the Interior pursuant to the Maine Acadian Culture Preservation Act (Pub. L. 101–543). The purpose of the Commission is to advise the National Park Service with respect to:

- The development and implementation of an interpretive program of Acadian culture in the state of Maine; and
- The selection of sites for interpretation and preservation by means of cooperative agreements.

The Agenda for this meeting is as follows:

1. Review and approval of the summary reports of the meetings held November 17, 1994, and February 16, 1995.
2. Review and approval of the commission's annual report for fiscal year 1994.
3. Reports of Maine Acadian Culture Preservation Commission working groups.
4. Report of the National Park Service planning team.
5. Opportunity for public comment.
6. Proposed agenda, place, and date of the next Commission meeting.

The meeting is open to the public. Further information concerning Commission meetings may be obtained from the Superintendent, Acadia National Park. Interested persons may make oral/written presentations to the Commission or file written statements. Such requests should be made at least seven days prior to the meeting to: Superintendent, Acadia National Park, P.O. Box 177, Bar Harbor, ME 04609–0177; telephone (207) 288–5472.

Dated: March 6, 1995.

Chrysandra L. Walter,

Acting Regional Director.

[FR Doc. 95–6192 Filed 3–13–95; 8:45 am]

BILLING CODE 4310–70–P

National Register of Historic Places; Notification of Pending Nominations

Nominations for the following properties being considered for listing in the National Register were received by the National Park Service before March 4, 1995. Pursuant to § 60.13 of 36 CFR Part 60 written comments concerning the significance of these properties under the National Register criteria for evaluation may be forwarded to the National Register, National Park Service, P.O. Box 37127, Washington, D.C. 20013–7127. Written comments should be submitted by March 29, 1995.

Carol D. Shull,

Chief of Registration, National Register.

ARKANSAS

Clay County

Scatterville Cemetery, Co. Rd. 404, 1.5 mi. W of AR 90, Rector vicinity, 95000364

Johnson County

Pioneer House, Poplar St. (AR 64), S of AR 123 and W of Johnson Co. Hospital, Clarksville, 95000363

Washington County

Wilson Park Historic District, Roughly bounded by College Ave., Maple St., Wilson Ave, and Louise St., Fayetteville, 95000365

CALIFORNIA

Los Angeles County

Montebello Woman's Club, 201 S. Park Ave., Montebello, 95000266

Orange County

Masonic Temple, 501 N. Harbor Blvd., Fullerton, 95000355

San Luis Obispo County

Eight Mile House, Off CA 101 on Stagecoach Rd., Santa Margarita, 95000358

San Luis Obispo Carnegie Library (California Carnegie Libraries MPS), 696 Monterey St., San Luis Obispo, 95000357

Santa Barbara County

Val Verde, 2549 Sycamore Canyon Rd., Santa Barbara, 95000359

Sonoma County

Petaluma Historic Commercial District, Along Petaluma Blvd., between B and Prospect Sts., Petaluma, 95000354

Tuolumne County

Watts & Tannahill Company Store, 18761 Main St. (CA 120), Groveland, 95000265

COLORADO

Denver County

Cole Neighborhood Historic District, 3200–3300 Vine and Race Sts., Denver, 95000264

DISTRICT OF COLUMBIA

District of Columbia State Equivalent

Garfinckel's Department Store, 1401 F St., NW., Washington, 95000353

Hotel Washington, 515 15th St., NW., Washington, 95000352

FLORIDA

Lee County

Boca Grande Community Center (Lee County MPS], E of Park Ave., between First and Second Sts., Boca Grande, 95000306

IOWA

Hancock County

Pilot Knob State Park: Portals (CCC Properties in Iowa State Parks MPS), Off IA 9 SE of Forest City, Pilot Knob State Park, Forest City vicinity, 95000362

KENTUCKY

Bourbon County

Tucker, John, House, 405 McNees Rd., Paris vicinity, 95000302

Boyle County

Rice—Worthington House, 3 mi. S of Faulconer Rd., on S. Buster Pike, Danville vicinity, 95000301

McCracken County

Tilghman, Augusta, High School, 401 Walter Jetton Blvd., Paducah, 95000300

LOUISIANA

Lafourche Parish

Bank of Lockport, 111 Barataria St., Lockport, 95000299

Merchants and Planters Bank, 110 Main St., Lockport, 95000297

St. Martin Parish

Dautreuil House, 517 E. Bridge St., St. Martinville, 95000356

Union Parish

Alabama Methodist Church, LA Alt. 2, Bernice vicinity, 95000298

MICHIGAN

Marquette County

Negaunee State Bank Building, 331 Iron St., Negaunee, 95000295

NEVADA

Humboldt County

Adorno Station, 9535 US 95 N, Winnemucca vicinity, 95000329

Humboldt River Bridge, N. Bridge St., over the Humboldt R., Winnemucca, 95000322

Winnemucca State Bank and Trust Company Building, 136 Bridge St., Winnemucca, 95000324

Washoe County

Veterans Memorial School, 1200 Locust St., Reno, 95000326

NEW JERSEY

Cumberland County

Sara Store, 17903 NW. 41st Ave., Ridgefield vicinity, 95000304

Essex County

Seated Lincoln (Public Sculpture in Newark MPS), Jct. of Springfield and Market Sts., Essex County Courthouse Plaza, Newark, 95000303

NEW YORK

Steuben County

World War Memorial Library, 149 Pine St., Corning, 95000361

OHIO

Hamilton County

Warder, John Aston, House (Boundary Decrease), 71 Shady Ln., North Bend vicinity, 95000351

TENNESSEE

Bedford County

Maple Dean Farm (Historic Family Farms in Middle Tennessee MPS), 400 New Herman Rd., Shelbyville vicinity, 95000269

Bledsoe County

Bledsoe County Courthouse (Historic County Courthouses of Tennessee MPS), Town Sq., Pikesville, 95000346

Dickson County

Neblett Place Farm (Historic Family Farms in Middle Tennessee MPS), 1160 St. Paul Rd., Charlotte vicinity, 95000267

Franklin County

Franklin County Courthouse (Historic County Courthouses of Tennessee MPS), Public Sq., Winchester, 95000345

Hamilton County

Central Block Building, 630—638 Market St., Chattanooga, 95000293

Lauderdale County

Lauderdale County Courthouse (Historic County Courthouses of Tennessee MPS), Town Sq., Ripley, 95000343

Madison County

Madison County Courthouse (Historic County Courthouses of Tennessee MPS), Public Sq., Jackson, 95000342

Monroe County

Monroe County Courthouse (Historic County Courthouses of Tennessee MPS), Town Sq., Madisonville, 95000341

Montgomery County

McCauley Hill Farm (Historic Family Farms in Middle Tennessee MPS), 1535 Harville Rd., Clarksville vicinity, 95000268

Obion County

Obion County Courthouse (Historic County Courthouses of Tennessee MPS), Jct. of Third and Washington Sts., Union City, 95000340

Perry County

Perry County Courthouse (Historic County Courthouses of Tennessee MPS), Town Sq., Linden, 95000339

Pickett County

Pickett County Courthouse (Historic County Courthouses of Tennessee MPS), Town Sq., Byrdstown, 95000338

Rutherford County

Allen Chapel A.M.E. Church, 224 S. Maney Ave., Murfreesboro, 95000291

Shelby County

Wells School, 4140 Collierville—Arlington Rd., Eads vicinity, 95000292

VERMONT

Essex County

Hibbard, Judge David, Homestead, Woodland Rd., Concord, 95000294

Washington County

Woodbury Town Hall, VT 14, Woodbury, 95000296

WASHINGTON

Pierce County

Dadisman, David, House, 1814 A St., Key Peninsula N, Home, 95000305

[FR Doc. 95–6155 Filed 3–13–95; 8:45 am]

BILLING CODE 4310–70–M

Wrangell-St. Alias National Park and Reserve; Proposed Plan of Operations to Conduct Mining Operations

AGENCY: National Park Service, Interior.

ACTION: Notice of availability.

SUMMARY: Notice is hereby given that pursuant to the provisions of section 2 of the Act of September 28, 1976, 16 U.S.C. 1901 et seq., and in accordance with the provisions of § 9.17 of Title 36 Code of Federal Regulation part 9

subpart A, James Moody has filed a proposed plan of operations to conduct mining operations on lands embracing the Bonanza Creek No. 1 through No. 6, placer claims within the Wrangell-St. Elias National Park and Preserve.

ADDRESSES: This plan of operations is available for inspection during normal business hours at the following locations:

Wrangell-St. Elias National Park and Preserve, Mile 105.5 Old Richardson Highway, Glennallen, Alaska 99588

Alaska Regional Office—Minerals Management Division, National Park Service, 2525 Gambell Room 107, Anchorage, Alaska 99503–2892

FOR FURTHER INFORMATION CONTACT: Jonathan B. Jarvis, Superintendent, Wrangell-St. Elias National Park and Preserve, Post Office Box 29, Glennallen, Alaska 99588, (907) 822–5234.

Robert D. Barbee,

Alaska Regional Director.

[FR Doc. 95–6237 Filed 3–13–95; 8:45 am]

BILLING CODE 4310–70–M

DEPARTMENT OF JUSTICE

Lodging of Consent Decree Pursuant to the Clean Air Act

In accordance with Departmental policy and 28 CFR 50.7, notice is hereby given that two proposed consent decrees in *United States* v. *Rocky Ford Storage, Inc., et al.,* Civil Action No. *94–N–1709,* were lodged on February 15th and 24th, 1995 respectively with the United States District Court for the District of Colorado. The proposed consent decrees resolve claims in the complaint filed against Michael L. Skorka and Rocky Ford Storage, Inc. involving alleged violations of the National Emissions Standard for Hazardous Air Pollutants regarding the removal of asbestos at the Rocky Ford Sugar Factory located in Rocky Ford, Colorado from 1989 through 1991. The consent decrees provide for payment of civil penalties to the United States for the violations alleged in the complaint. After a demonstration of a inability to pay a higher penalty by both Mr. Skorka and Rocky Ford Storage, Inc., Mr. Skorka will pay a civil penalty in the amount of $5,000 and Rocky Ford Storage, Inc. will pay a civil penalty in the amount of $22,000.

The Department of Justice will receive, for a period of thirty (30) days from the date of this publication, comments relating to the proposed consent decrees. Comments should be addressed to the Assistant Attorney General for the Environment and Natural Resources Division, Department of Justice, Washington, D.C. 20530, and should refer to *United States* v. *Rocky Ford Storage, Inc., et al.,* Doj Ref. #90–5–2–1–1833.

The proposed consent decrees may be examined at the Office of the United States Attorney, 12th Floor, Federal Office Building, 1961 Stout Street, Denver, Colorado 80294; the Region VIII Office of the Environmental Protection Agency, 999 18th Street, Suit 500, Denver, Colorado 80202; and at the Consent Decree Library, 1120 G Street, NW., 4th Floor, Washington, DC 20005, 202–624–0892. Copies of the proposed consent decrees may be obtained in person or by mail from the Consent Decree Library, 1120 G Street, NW., 4th Floor, Washington, DC 20005. In requesting a copy, please refer to the referenced case and enclose a check in the amount of $*5.50* (25 cents per page reproduction costs), for the Skorka consent decree or $*3.00* (25 cents per page reproduction costs) for the Rocky Ford Storage, Inc. consent decree, payable to the Consent Decree Library.

Joel M. Gross,

Acting Chief, Environmental Enforcement Section, Environment and Natural Resources Division.

[FR Doc. 95–6193 Filed 3–13–95; 8:45 am]

BILLING CODE 4410–01–M

Antitrust Division

Pursuant to the National Cooperative Research and Production Act of 1933—Laser Power Corporation

Notice is hereby given that, on December 2, 1994, pursuant to Section 6(a) of the National Cooperative Research and Production Act of 1993, 15 U.S.C. 4301 *et seq.* (''the Act''), Laser Power Corporation has filed written notifications simultaneously with the Attorney General and the Federal Trade Commission disclosing (1) the identities of the parties and (2) the nature and objectives of the venture. The notifications were filed for the purpose of invoking the Act's provisions limiting the recovery of antitrust plaintiffs to actual damages under specified circumstances. Pursuant to Section 6(b) of the Act, the identities of the parties are Laser Power Corporation, San Diego CA, and Proxima Corporation, San Diego, CA.

The nature and objectives of this joint venture is to conduct cooperative research and development on the ''High Resolution Multimedia Laser Projection Display'' (HRMLPD) (ATP #94–01–0133) program awarded by the Department of Commerce's NIST Advanced Technology Program.

Constance K. Robinson,

Director of Operations, Antitrust Division.

[FR Doc. 95–6194 Filed 3–13–95; 8:45 am]

BILLING CODE 4410–01–M

Pursuant to the National Cooperative Research and Production Act of 1993—Poweropen Association, Inc.

Notice is hereby given that, on December 28, 1994, pursuant to Section 6(a) of the National Cooperative Research and Production Act of 1993, 15 U.S.C. 4301 *et seq.* (''the Act''), PowerOpen Association, Inc. (''PowerOpen''), has filed written notifications simultaneously with the Attorney General and the Federal Trade Commission disclosing changes in membership. The notifications were filed for the purpose of extending the Act's provisions limiting the recovery of antitrust plaintiffs to actual damages under specified circumstances. Specifically, the identities of the new members of PowerOpen are: Aspect Communications, Inc., San Jose, CA; Bolt Bernack and Newman, Inc., Cambridge, MA; CelsiusTech Systems AB, Jarfalla, SWEDEN; and Gradient Technologies, Inc., Marlboro, MA.

No other changes have been made in either the membership or planned activity of the project. Membership remains open and PowerOpen intends to file additional written notification disclosing all changes in membership.

On April 21, 1993, PowerOpen filed its original notification pursuant to Section 6(a) of the Act. The Department of Justice published a notice in the **Federal Register** pursuant to Section 6(b) of the Act on June 22, 1993 (58 FR 33954). The last notification was filed with the Department of September 30, 1994. A notice for this filing has not yet been published in the **Federal Register**.

Constance K. Robinson,

Director of Operations, Antitrust Division.

[FR Doc. 95–6197 Filed 3–13–95; 8:45 am]

BILLING CODE 4410–01–M

Notice Pursuant to the National Cooperation Research and Production Act of 1993—the Durability Validation of Composite NGV Fuel Cylinders Program

Notice is hereby given, that on September 6, 1994, pursuant to Section 6(a) of the National Cooperative Research and Production Act of 1993, 15 U.S.C. 4301 *et seq.* (''the Act''), Southwest Research Institute (''SwRI'') has filed written notification

simultaneously with the Attorney General and the Federal Trade Commission disclosing a change in membership of the Durability Validation of Composite NGV Fuel Cylinders Program, and correcting an error in the last notice published. The notification was filed for the purpose of extending the Act's provisions limiting the recovery of antitrust plaintiffs to actual damages under specified circumstances. Specifically, Southern California Gas Company, Los Angeles, CA, has become a party to the group research project. Further, in the title of the August 31, 1994 notice published at 59 FR 45013, the word ''Valuation'' should read ''Validation''.

No other changes have been made in either the membership or planned activity of the group research project. Membership in the project remains open, and SwRI intends to file additional written notification disclosing all changes in membership.

On July 12, 1994, SwRI filed its original notification pursuant to Section 6(a) of the Act. The Department of Justice published a notice in the **Federal Register** pursuant to Section 6(b) of the Act on August 31, 1994, 59 FR 45013.

Constance K. Robinson,

Director of Operations, Antitrust Division.

[FR Doc. 95–6196 Filed 3–13–95; 8:45 am]

BILLING CODE 4410–01–M

Notice Pursuant to the National Cooperative Research and Production Act of 1993—Processes for the Production of Steel From Iron Carbide and Related Technologies

Notice is hereby given that, on January 5, 1995, pursuant to Section 6(a) of the National Cooperative Research and Production Act of 1993, 15 U.S.C. 4301 *et seq.* (''the Act''), the parties to a cooperative research and production venture relating to processes for the production of steel from iron carbide and related technologies has filed a notification simultaneously with the Attorney General and the Federal Trade Commission disclosing (1) the identities of the parties and (2) the nature and objectives of the venture. The notifications were filed for the purpose of invoking the Act's provisions limiting the recovery of antitrust plaintiffs to actual damages under specified circumstances. Pursuant to Section 6(b) of the Act, the identities of the parties are: U.S. Steel Group, a unit of USX Corporation, Pittsburgh, PA; Nucor Corporation, Charlotte, NC; and Praxair, Inc., Danbury, CT. None of the parties are controlled by any other person. The nature and objectives of the venture are to jointly conduct a feasibility study of a specific process for producing low-carbon alloys (steel) from iron carbide (the ''Process''). If the feasibility study is successful, the venture will design, construct and operate a plant to demonstrate the feasibility of the Process (the ''Demonstration Plant'').

The venture will involve the testing of steel produced at the plant; the collection, exchange and analysis of research and production data and information obtained from operating the plant and concerning the Process, the iron carbide processed and steel produced at the plant; improvements and modifications to the Process; and development of related processes for the production of steel from iron carbide. The venture will also prosecute patent applications (domestic and foreign) covering the Process, improvements and related processes, and will hold title to such patents. The venture will license its patents and unpatented technology to third persons.

The parties have executed a Letter of Intent, dated as of October 5, 1994, which contemplates that they will enter into a written definitive agreement concerning the venture. No written definitive agreement has yet been executed.

Constance K. Robinson,

Director of Operations, Antitrust Division.

[FR Doc. 95–6195 Filed 3–13–95; 8:45 am]

BILLING CODE 4410–01–M

Drug Enforcement Administration

Manufacturer of Controlled Substances; Notice of Registration

By Notice dated November 21, 1994, and published in the **Federal Register** on November 29, 1994, (59 FR 61002), Isotec, Inc., 3858 Benner Road, Miamisburg, Ohio 45342, made application to the Drug Enforcement Administration (DEA) to be registered as a bulk manufacturer of the basic classes of controlled substances listed below:

Drug	Schedule
Cathinone (1235)	I
Methcathinone (1237)	I
N-Ethylamphetamine (1475)	I
N,N-Dimethylamphetamine (1480)	I
Aminorex (1585)	I
Methaqualone (2565)	I
Lysergic acid diethylamide (7315)	I
Tetrahydrocannabinols (7370)	I
Mescaline (7381)	I
2,5-Dimethoxyamphetamine (7396).	I
3,4-Methylenedioxyamphetamine (7400).	I
3,4-Methylenedioxy-N-ethylamphetamine (7404).	I
3,4-Methylenedioxymethamphetamine (7405).	I
4-Methoxyamphetamine (7411)	I
N-Ethyl-1-phenylcyclohexylamine (7455).	I
Dihydromorphine (9145)	I
Normorphine (9313)	I
Acetylmethadol (9601)	I
Alphacetylmethadol Except Levo-Alphacetylmethadol (9603).	I
Normethadone (9635)	I
3-Methylfentanyl (9813)	I
Amphetamine (1100)	II
Methamphetamine (1105)	II
Methylphenidate (1724)	II
Amobarbital (2125)	II
Pentobarbital (2270)	II
Secobarbital (2315)	II
1-Phenylcyclohexylamine (7460)	II
Phencyclidine (7471)	II
Phenylacetone (8501)	II
1-Piperidinocyclohexanecarbonitrile (8603).	II
Codeine (9050)	II
Dihydrocodeine (9120)	II
Oxycodone (9143)	II
Hydromorphone (9150)	II
Benzoylecgonine (9180)	II
Ethylmorphine (9190)	II
Hydrocodone (9193)	II
Isomethadone (9226)	II
Meperidine (9230)	II
Methadone (9250)	II
Methadone intermediate (9254)	II
Dextropropoxyphene, bulk (non-dosage forms) (9273).	II
Morphine (9300)	II
Levo-Alphacetylmethadol (9648)	II
Oxymorphone (9652)	II
Fentanyl (9801)	II

Comments were filed by two registered manufacturers. The comments were considered, however, DEA determined that the application should be approved. Therefore, pursuant to Section 303 of the Comprehensive Drug Abuse Prevention and Control Act of 1970 and Title 21, Code of Federal Regulations, Deputy Assistant Administrator, Office of Diversin Control, Deputy Assistant Administrator, Office of Diversion Control, hereby orders that the application submitted by the above firm for registration as a bulk manufacturer of the basic classes of controlled substances listed above is approved and registration is granted.

Dated: March 8, 1995.

Gene R. Haislip,

Deputy Assistant Administrator, Office of Diversion Control, Drug Enforcement Administration.

[FR Doc. 95–6218 Filed 3–13–95; 8:45 am]

BILLING CODE 4410–09–M

Importer of Controlled Substances; Notice of Registration

By Notice dated January 17, 1995, and published in the **Federal Register** on January 25, 1995, (60 FR 4925), Knight Seed Company, Inc., 151 W. 126th Street, Burnsville, Minnesota 55337, made application to the Drug Enforcement Administration (DEA) to be registered as an importer of Marihuana (7360), a basic class of controlled substance listed in Schedule I.

No comments or objections have been received. Therefore, pursuant to Section 1008(a) of the Controlled Substances Import and Export Act and in accordance with Title 21, Code of Federal Regulations, Section 1311.42, the above firm is granted registration as an importer of the basic class of controlled substance listed above.

Dated: March 8, 1995.

Gene R. Haislip,

Deputy Assistant Administrator, Office of Diversion Control, Drug Enforcement Administration.

[FR Doc. 95–6219 Filed 3–13–95; 8:45 am]

BILLING CODE 4410–09–M

[Docket No. 94–52]

Mallinckrodt Chemical, Inc.; St. Louis, Missouri; Notice of Administrative Hearing, Summary of Comments and Objections; Notice of Hearing

This Notice of Administrative Hearing, Summary of Comments and Objections, regarding the application of Mallinckrodt Chemical, Inc. (Mallinckrodt) for registration as a bulk manufacturer of methylphenidate, a Schedule II controlled substance, is published pursuant to 21 CFR 1301.43(a). Notice was published in the **Federal Register** on March 28, 1994,[1] and May 13, 1994,[2] respectively, naming the applicant and stating that the applicant has applied to be registered as a bulk manufacturer of methylphenidate.

On June 14, 1994, MD Pharmaceutical Inc. (MD Pharmaceutical) filed an objection and requested a hearing on the application, in accordance with 21 CFR 1301.43(a). Notice is hereby given that a hearing with respect to the Mallinckrodt's application to be registered as a bulk manufacturer of methylphenidate will be conducted pursuant to the provisions of 5 U.S.C. 552 et seq. and 21 CFR 1301.43 et seq. and 1316.41 et seq.

[1] 59 FR 14426.

[2] 59 FR 25126.

Hearing Date: The hearing is scheduled for May 2 through 5 1994, commencing at 9:30 a.m. on May 2, 1995, at the Drug Enforcement Administration Headquarters, 600 Army Navy Drive, Hearing Room, Room E–2103, Arlington, Virginia.

Notice of Appearance: Any person entitled to participate in this hearing pursuant to 21 CFR 1301.43(a), and interested in doing so, may participate by filing a notice of intention to participate in accordance with 21 CFR 1301.54, in duplicate, with the Hearing Clerk, Office of the Administrative Law Judge, Drug Enforcement Administration, Washington, D.C. 20537, within 30 days of the date of publication of this notice in the **Federal Register**. Each notice of appearance must be in the form prescribed in 21 CFR 1316.48. The entities whose comment and/or objections are referenced below need not file a notice of intention to participate.

For Further Information Contact: Ms. Helen Farmer, Hearing Clerk, Drug Enforcement Administration, Washington, D.C. 20537; Telephone (202) 307–8188.

Summary of Comments and Objections

Drug Enforcement Adminstration Comments

The Government does not know of any reason to deny Mallinckrodt's application.

MD Pharmaceutical's Comments and Objections

MD Pharmaceutical intends to show that the registration of Mallinckrodt to manufacture methylphenidate in its generic form is not consistent with the public interest as that term is used in 21 U.S.C. 823(a). MD Pharmaceutical seeks to establish that Mallinckrodt does not satisfy the public interest standard by showing that: (1) Mallinckrodt does not meet the Controlled Substances Act requirements for registration as a bulk manufacturer of methylphenidate; and (2) the Food and Drug Administration has cited Mallinckrodt frequently in the twelve months preceding MD Pharmaceutical's hearing request for serious violations directly related to the manufacture and distribution of adulterated drug products.

Mallinckrodt's Comments

Mallinckrodt intends to establish that it meets the requirements of 21 USC 823(a) and, therefore, qualifies for registration as a manufacturer of methylphenidate. Mallinckrodt seeks to demonstrate that it satisfies the requirements of § 823(a) by showing that: (1) Mallinckrodt is registered as a bulk manufacturer of numerous Schedule II controlled substances; (2) Mallinckrodt has been a bulk manufacturer of narcotics for more than ninety-five years; (3) Mallinckrodt has a long history of successful controls against diversion and is prepared to apply that experience to its Mallinckrodt production; (4) Mallinckrodt has proven its commitment to insuring that there is an adequate and uninterrupted supply of bulk narcotics; (5) Mallinckrodt has a proven track record of promoting technical advances in the field of bulk narcotics manufacture; and (6) Mallinckrodt has used its special status as a registered manufacturer of narcotics to promote public health and safety.

Dated: March 8, 1995.

Stephen H. Greene,

Deputy Administrator, Drug Enforcement Administration.

[FR Doc. 95–6159 Filed 3–13–95; 8:45 am]

BILLING CODE 4410–09–M

Manufacturer of Controlled Substances; Notice of Registration

By Notice dated January 17, 1995, and published in the **Federal Register** on January 25, 1995, (60 FR 4926), MD Pharmaceutical, Inc., 3501 West Garry Avenue, Santa Ana, California 92704, made application to the Drug Enforcement Administration (DEA) to be registered as a bulk manufacturer of the basic classes of controlled substances listed below:

Drug	Schedule
Methylphenidate (1724)	II
Diphenoxylate (9170)	II

No comments or objections have been received. Therefore, pursuant to Section 303 of the Comprehensive Drug Abuse Prevention and Control Act of 1970 and Title 21, Code of Federal Regulations, Section 1301.54(e), the Deputy Assistant Administrator, Office of Diversion Control, hereby orders that the application submitted by the above firm for registration as a bulk manufacturer of the basic classes of controlled substances listed above is granted.

Dated: March 8, 1995.

Gene R. Haislip,

Deputy Assistant Administrator, Office of Diversion Control, Drug Enforcement Administration.

[FR Doc. 95–6220 Filed 3–13–95; 8:45 am]

BILLING CODE 4410–09–M

Importation of Controlled Substances; Notice of Application

Pursuant to Section 1008 of the Controlled Substances Import and Export Act (21 U.S.C. 958(i)), the Attorney General shall, prior to issuing a registration under this Section to a bulk manufacturer of a controlled substance in Schedule I or II and prior to issuing a regulation under Section 1002(a) authorizing the importation of such a substance, provide manufacturers holding registrations for the bulk manufacture of the substance an opportunity for a hearing.

Therefore, in accordance with Section 1311.42 of Title 21, Code of Federal Regulations (CFR), notice is hereby given that on February 2, 1995, Roche Diagnostic System, Inc., 1080 U.S. Highway 202, Somerville, New Jersey 08876, made application to the Drug Enforcement Administration to be registered as an importer of Tetrahydrocannabinols (7370) a basic class of controlled substance in Schedule I.

The Tetrahydrocannabinols will be utilized exclusively for non-human consumption in drug of abuse detection kits.

Any manufacturer holding, or applying for, registration as a bulk manufacturer of this basic class of controlled substance may file written comments on or objections to the application described above and may, at the same time, file a written request for a hearing on such application in accordance with 21 CFR 1301.54 in such form as prescribed by 21 CFR 1316.47.

Any such comments, objections, or requests for a hearing may be addressed to the Deputy Assistant Administrator, Office of Diversion Control, Drug Enforcement Administration, United States Department of Justice, Washington, D.C. 20537, Attention: DEA Federal Register Representative (CCR), and must be filed no later than April 13, 1995.

This procedure is to be conducted simultaneously with and independent of the procedures described in 21 CFR 1311.42 (b), (c), (d), (e), and (f). As noted in a previous notice at 40 FR 43745–46 (September 23, 1975), all applicants for registration to import a basic class of any controlled substance in Schedule I or II are and will continue to be required to demonstrate to the Deputy Assistant Administrator, Office of Diversion Control, Drug Enforcement Administration that the requirements for such registration pursuant to 21 U.S.C. 958(a), 21 U.S.C. 823(a), and 21 CFR 1311.42 (a), (b), (c), (d), (e), and (f) are satisfied.

Dated: March 8, 1995.

Gene R. Haislip,

Deputy Assistant Administrator, Office of Division Control, Drug Enforcement Administration.

[FR Doc. 95–6221 Filed 3–13–95; 8:45 am]

BILLING CODE 4410–09–M

Immigration and Naturalization Service

[INS No. 1714–95]

Announcement of Membership of Citizens' Advisory Panel and First Meeting

AGENCY: Immigration and Naturalization Service, Justice.

ACTION: Notice of meeting.

SUMMARY: The Immigration and Naturalization Service (Service) in accordance with the Federal Advisory Committee Act [5 U.S.C. App. 2] and 41 CFR 101–6.1001–101–6.1035, has established a Citizens' Advisory Panel (CAP) to provide the Department of Justice with recommendations on ways to reduce the number of complaints of abuse made against employees of the Service, and to minimize or eliminate the causes for those complaints. This notice announces CAP membership, a forthcoming meeting, and the agenda for the meeting.

DATES AND TIMES: April 12–13, 1995 at 9:00 A.M.

ADDRESSES: Immigration and Naturalization Service, Chester Arthur Building, 425 I Street, NW., 6th Floor Conference Room, Washington, DC 20536.

FOR FURTHER INFORMATION CONTACT: Kathy Morland, CAP Facilitator, Immigration and Naturalization Service, Room 6042, Chester Arthur Building, 425 I Street, NW., Washington, DC 20536, Telephone (202) 616–7766.

SUPPLEMENTARY INFORMATION: Pursuant to the charging language of the Senate Appropriations Committee Report 102–331 on the FY 1993 Budget for the Immigration and Naturalization Service, Department of Justice, the Service established a Citizens' Advisory Panel for the purpose of providing recommendations to the Attorney General on ways to reduce the number of complaints of abuse made against employees of the Service and, most importantly, to minimize or eliminate the causes for those complaints. The CAP is authorized by the Attorney General to (1) accept and review civilian complaints made against Service employees, and (2) review the systems and procedures used by the Service for responding to such complaints. (February 11, 1994 at 59 FR 6658)

In accordance with the Federal Advisory Committee Act, the Charter for the Citizens' Advisory Panel (CAP) was filed with Congress, and the Attorney General has approved the following members to serve on the Panel.

CAP Members

Private Citizen Members

Miguel A. Conchas, President and C.E.O., Laredo Chamber of Commerce, Laredo, TX; Edwin J. Delattre, Dean of the School of Education, Boston University, Boston, MA; Carol Rogoff Hallstrom, Regional Director, The National Conference, San Diego, CA; Bill Ong Hing, Associate Professor, Stanford Law School, Stanford, CA; Jose G. Moreno, Executive Director, Diocesan Migrant and Refugee Services, El Paso, TX; Elsie L. Scott, Deputy Commissioner of Training, New York City Police Academy, New York, NY;

Anna Ochoa Thorne, Immigration Attorney, Phoenix, AZ; and

Edward J. Tully, Director of Research, FBI National Executive Institute Associates, Fredericksburg, VA.

(A ninth private citizen member will be announced shortly).

Government Members

Doris Meissner, Commissioner, Immigration and Naturalization Service (Chairperson);

Yvonne Campos, Assistant to the Attorney General, Office of the Attorney General, Department of Justice;

Kenneth Leutbecker, Associate Director, Immigration and Refugee Affairs, Community Relations Service, Department of Justice;

Michael S. Williams, Director, Central Region, Immigration and Naturalization Service;

John Chase, Director, Office of Internal Audit, Immigration and Naturalization Service (non-voting); and

Armando Ortiz Rocha, Consul General, Consulate of the Government of Mexico (non-voting).

Summary of Agenda

As this is the first meeting of the CAP, the principal purposes of the meeting will be to introduce the members to each other and to discuss future activities of the CAP. There will also be an overview of the Service as well as a general discussion of the current complaint review process. The CAP will be chaired by Doris Meissner, Commissioner of the Immigration and Naturalization Service.

Public Participation

The CAP meeting is open to the interested public, but limited to the space available. Persons wishing to attend should notify the CAP Facilitator at least two days before the meeting. Any member of the public may file a written statement with the CAP Facilitator before the meeting. Minutes of the meeting will be available on request.

Dated: March 8, 1995.

Doris Meissner,

Commissioner, Immigration and Naturalization Service.

[FR Doc. 95–6213 Filed 3–13–95; 8:45 am]

BILLING CODE 4410–10–M

NATIONAL AERONAUTICS AND SPACE ADMINISTRATION

[Notice (95–023)]

Intent To Grant an Exclusive Patent License

AGENCY: National Aeronautics and Space Administration.

ACTION: Notice of intent to grant a patent license.

SUMMARY: NASA hereby gives notice of its intent to negotiate with KVH Industries, Inc., of Middletown, Rhode Island, an exclusive, royalty-bearing revocable license to practice the invention described in U.S. Patent Application Serial Number 07/999/794, filed November 30, 1992, entitled ''Satellite-Tracking Millimeter Wave Reflector Antenna System for Mobile Satellite Tracking,'' which will issue on March 14, 1995, to the United States of America as represented by the Administrator of the National Aeronautics and Space Administration. The proposed license agreement will contain appropriate terms, limitations, and conditions to be negotiated in accordance with the regulations governing the licensing of government-owned inventions as described in 37 CFR part 404. NASA will negotiate the final terms and conditions and grant the exclusive license, unless within 60 days of the date of this Notice, the NASA Director of Patent Licensing receives written objections to the grant of an exclusive license, together with any supporting documentation. The NASA Director of Patent Licensing will review all written responses to the notice and then recommend to the Associate General Counsel (Intellectual Property) whether or not to grant the exclusive license.

DATES: Comments to the notice must be received by May 15, 1995.

ADDRESSES: National Aeronautics and Space Administration, Code GP, Washington, DC 20546.

FOR FURTHER INFORMATION CONTACT: Mr. Harry Lupuloff, NASA, Director of Patent Licensing, (202) 358–2041.

Dated: March 6, 1995.

Edward A. Frankle,

General Counsel.

[FR Doc. 95–6233 Filed 3–13–95; 8:45 am]

BILLING CODE 7510–01–M

NUCLEAR REGULATORY COMMISSION

Organization of Agreement State Managers' Meeting

AGENCY: U.S. Nuclear Regulatory Commission.

ACTION: Notice of meeting.

SUMMARY: The U.S. Nuclear Regulatory Commission (NRC) staff plans to hold a public meeting for managers of the Organization of Agreement States. Agreement States are States which have assumed regulatory authority over certain radioactive materials. The purpose of the meeting is to discuss Agreement State Program issues with Agreement State managers and other interested parties. Topics for discussion will include, among others: Status of NRC Agreement States Program Improvements; Open Discussion of Agreement State Issues; Integrated Materials Performance Evaluation Program; Event Reporting and Data Gathering; NRC Materials Licensing Business Process Redesign Project; and Licensee Wrongdoing Awareness Workshop.

DATES: The meeting will be held on April 5–6, 1995 from 8:30 a.m. to 5:00 p.m. each day.

ADDRESSES: The meeting will be held at NRC's Two White Flint North Auditorium, located at 11545 Rockville Pike, Rockville, Maryland.

FOR FURTHER INFORMATION CONTACT: Rosetta Virgilio, Office of State Programs, Mail Stop OWFN–3–D–23, U.S. Nuclear Regulatory Commission, Washington, D.C. 20555, Telephone 301/415–2307.

CONDUCT OF THE MEETING: The meeting will be conducted in a manner that will expedite the orderly conduct of business. A transcript of the meeting will be available for inspection, and copying for a fee, at the NRC Public Document Room, 2120 L Street N.W. (Lower Level), Washington, D.C. 20555 on or about June 5, 1995.

The following procedures apply to public attendance at the meeting:

1. Questions or statements will be entertained on a first-come, first-served basis.

2. Seating will be on a first-come, first-served basis.

Dated at Rockville, Maryland this 6th day of March, 1995.

For the U.S. Nuclear Regulatory Commission.

Richard L. Bangart,

Director, Office of State Programs.

[FR Doc. 95–6208 Filed 3–13–95; 8:45 am]

BILLING CODE 7590–01–M

[Docket No. 50–213]

Connecticut Yankee Atomic Power Co.; Notice of Issuance of Amendment to Facility Operating License

The U.S. Nuclear Regulatory Commission (Commission) has issued Amendment No. 184 to Facility Operating License No. DPR–61 issued to the Connecticut Yankee Atomic Power Company (the licensee), which revised the Technical specifications for operation of the Haddam Neck Plant located in Middlesex County, Connecticut. The amendment is effective as of the date of issuance to be implemented within 30 days of issuance.

The amendment revises Technical Specification (TS) 3/4.4.10, ''Structural Integrity,'' surveillance requirement 4.4.10. In particular, the change will add a footnote to the TS for an extension for one cycle of the ultrasonic volumetric inspection for the areas of higher stress concentration for RCPs 1 and 2.

The application for the amendment complies with the standards and requirements of the Atomic Energy Act of 1954, as amended (the Act), and the Commission's rules and regulations. The Commission has made appropriate findings as required by the Act and the Commission's rules and regulations in 10 CFR Chapter I, which are set forth in the license amendment.

Notice of Consideration of Issuance of Amendment and Opportunity for Hearing in connection with this action was published in the **Federal Register** on February 8, 1994 (59 FR 5787). No request for a hearing or petition for leave to intervene was filed following the notice.

The Commission has prepared an Environmental Assessment related to the action and has determined not to prepare an environmental impact statement. Based upon the environmental assessment, the Commission has concluded that the issuance of the amendment will not have a significant effect on the quality

of the human environment (60 FR 11124).

For further details with respect to the action see (1) the application for amendment dated December 22, 1993, (2) Amendment No. 184 to License No. DPR–61, (3) the Commission's related Safety Evaluation, and (4) the Commission's Environmental Assessment. All of these items are available for public inspection at the Commission's Public Document Room, the Gelman Building, 2120 L Street, NW., Washington, DC, and at the local public document room located at the Russell Library, 123 Broad Street, Middletown, CT 06457.

Dated at Rockville, Maryland, this 6th day of March 1995.

For the Nuclear Regulatory Commission.

Alan B. Wang,

Project Manager, Project Directorate I–4, Division of Reactor Projects—I/II, Office of Nuclear Reactor Regulation.

[FR Doc. 95–6209 Filed 3–13–95; 8:45 am]

BILLING CODE 7590–01–M

[Docket No. 50–413]

Duke Power Company, et al. (Catawba Nuclear Station, Unit No. 1); Exemption

I

The Duke Power Company, et al. (DPC or the licensee) is the holder of Facility Operating License No. NPF–35, which authorizes operation of the Catawba Nuclear Station, Unit No. 1 (the facility), at a steady-state reactor power level not in excess of 3411 megawatts thermal. The facility is a pressurized water reactor located at the licensee's site in York County, South Carolina. The license provides, among other things, that the Catawba Nuclear Station is subject to all rules, regulations, and Orders of the U.S. Nuclear Regulatory Commission (the Commission or NRC) now or hereafter in effect.

II

Section III.D.1.(a) of Appendix J to 10 CFR Part 50 requires the performance of three Type A containment integrated leakage rate tests (ILRTs) at approximately equal intervals during each 10-year service period of the primary containment. The third test of each set shall be conducted when the plant is shut down for a 10-year inservice inspection of the primary containment.

III

By letters dated October 18, 1994, and February 7, 1995, the licensee requested temporary relief from the requirement to perform a set of three Type A tests at approximately equal intervals during each 10-year service period of the primary containment. The requested exemption would permit a one-time interval extension of the third Type A test by approximately 16 months (from the 1995 refueling outage, which began on February 11, 1995, to the end-of-cycle 9 (EOC–9) refueling outage, currently scheduled for June 1996) and would permit the third Type A test of the second 10-year inservice inspection period to not correspond with the end of the current inservice inspection interval.

The licensee's request concluded that the proposed change, a one-time extension of the interval between the second and third ILRTs at Catawba Unit 1, is justified for the following reasons:

The previous testing history at Catawba Unit 1 provides substantial justification for the proposed test interval extension. In each of the two previous periodic ILRTs at Catawba Unit 1, the as-found leakage was less than or equal to 22.5% of the allowable leakage, thereby demonstrating that Catawba Unit 1 is a low-leakage containment. There are no mechanisms which would adversely affect the structural integrity of the containment, or that would be a factor in extending the test interval by 20 months. However, as a preventative maintenance measure, a containment civil inspection, currently required by Appendix J prior to a Type A test, will be performed during EOC–8 to verify that no structural degradation exists. Any additional risk created by the longer interval between ILRTs is considered to be negligible, primarily because Type B and C testing will continue unchanged.

Additionally, the licensee stated that its exemption request meets the requirements of 10 CFR 50.12, paragraphs (a)(1) and (a)(2)(ii), for the following reasons:

In order to justify the granting of an exemption to the requirements of 10 CFR Part 50, paragraph 50.12(a)(1) requires that the licensee show that the proposed exemption will not pose an undue risk to the public. That this proposed change will not pose an undue risk is demonstrated by the analysis presented in draft NUREG–1493, which concludes that an increase in the test interval to once every 20 years would ''lead to an imperceptible increase in risk.'' The analyses in draft NUREG–1493 are considered to be specifically applicable to Catawba because: (1) The requested exemption would result in a one-time increase in the test interval to 5 years, not 20; (2) the population density around Catawba is less than that used in the study (329 people per square mile, vs. 340 used in the study; (3) no ILRT at Catawba has jailed; (4) the core inventory used in the study was represented by a 3412 Mwt PWR [pressurized water reactor]. Catawba is a 3411 Mwt PWR. Other factors which lead to the conclusion that the proposed change will not pose an undue risk include the fact that local leak rate testing, which identifies 97% of leakage in excess of prescribed limits, will remain in place at its current test frequency; the detailed, proceduralize containment civil inspection which is normally performed in conjunction with an ILRT will be performed in place of the scheduled ILRT, to identify potential structural deteriorations; and the historical leak-tightness of the containment structure, as evidenced by two successive ILRTs in which the as-found leakage did not exceed 22.5% of the allowable leakage rate.

A comparison was made between the risk analysis presented in draft NUREG–1493 and a probabilistic risk assessment performed for Catawba Nuclear Station. While the quantitative results of the NUREG are not directly applicable to plants not used in the study, similar conclusions can be made concerning Catawba. NUREG–1493 indicates that reactor accident risks are dominated by accident sequences that result in failure or bypass of the containment. This conclusion is also valid for Catawba. Considering only the Catawba accident sequences that do not result in containment failure, containment leakage contributes approximately 0.08 to 0.09 percent to off-site risk (whole-body person-rem, thyroid nodules, and latent fatalities). NUREG–1493 indicated that containment leakage contributed from 0.02 to 0.10 percent to latent cancer risk. The comparison between the analysis of NUREG–1493 and the Catawba PRA concludes that increases in containment leakage at Catawba are expected to produce increases in accident risk similar to the results in NUREG–1493.

Special circumstances, as defined in 10 CFR [50].12(a)(2)(ii), are present in that the requirement to perform the third ILRT during the ISI outage is not necessary to achieve the underlying purpose of the rule. The purposes of the rule, as stated in Section I of Appendix J, are to ensure that: (a) Leakage through the primary reactor containment and systems and components penetrating containment shall not exceed allowable values, and (b) periodic surveillance of reactor containment penetrations and isolation valves is performed so that proper maintenance and repairs are made. One of the significant factors in assuring that the proposed exemption will not pose an undue risk to the public, as noted above, is the local leak rate testing (LLRT) which is performed. That the LLRT program at Catawba provides an effective mechanism for maintaining containment integrity is perhaps best demonstrated by the fact that the most recent ILRT at Catawba Unit 1 was performed at the front end of the refueling outage; before any repairs or adjustments were made to valves or penetrations. Nevertheless, the as-found leakage did not exceed 22.5% of the allowable leakage rate. The fact that no leakage paths were identified by an ILRT, and that the ILRT met the acceptance criteria with significant margin confirms the results of the Type B and C testing.

The frequency and scope of the Type B and C LLRT program are not being changed by this exemption request. The LLRT program

will continue to effectively detect containment leakage resulting from the degradation of active containment isolation components, as well as containment penetrations. Administrative limits have been established for each Type B or C component at a fraction of the allowable leak rate, such that any leakage detected in excess of the administrative limit will indicate a potential valve or penetration degradation. In instances in which a component's leakage exceeds its administrative limit, proceduralized controls in the test program require that a work order be written to repair the component.

IV

Section III.D.1.(a) of Appendix J to 10 CFR Part 50 states that a set of three Type A leakage rate tests shall be performed at approximately equal intervals during each 10-year service period.

The licensee proposes an exemption to this section which would provide a one-time interval extension for the Type A test by approximately 16 months. The Commission has determined that, pursuant to 10 CFR 50.12(a)(1), this exemption is authorized by law, will not present an undue risk to the public health and safety, and is consistent with the common defense and security. The Commission further determined, for the reasons discussed below, that special circumstances, as provided in 10 CFR 50.12(a)(2)(ii), are present justifying the exemption; namely, that application of the regulation in the particular circumstances is not necessary to achieve the underlying purpose of the rule. The underlying purpose of the requirement to perform Type A containment leak rate tests at intervals during the 10-year service period, is to ensure that any potential leakage pathways through the containment boundary are identified within a time span that prevents significant degradation from continuing or becoming unknown. The NRC staff has reviewed the basis and supporting information provided by the licensee in the exemption request. The NRC staff has noted that the licensee has a good record of ensuring a leak tight containment. All Type A tests have passed with significant margin and the licensee has noted that the results of the Type A testing have been confirmatory of the Type B and C tests which will continue to be performed. The licenses has stated that it will continue to perform the general containment civil inspection although it is only required by Appendix J (Section V.A.) to be performed in conjunction with Type A tests. The NRC staff considers that these inspections, though limited in scope, provide an important added level of confidence in the continued integrity of the containment boundary.

The NRC staff has also made use of a draft staff report, NUREG–1493, which provides the technical justification for the present Appendix J rulemaking effort which also includes a 10-year test interval for Type A tests. The integrated leakage rate test, or Type A test, measures overall containment leakage. However, operating experience with all types of containments used in this country demonstrates that essentially all containment leakage can be detected by local leakage rate tests (Type B and C). According to results given in NUREG–1493, out of 180 ILRT reports covering 110 individual reactors and approximately 770 years of operating history, only 5 ILRT failures were found which local leakage rate testing could not detect. This is 3% of all failures This study agrees with previous NRC staff studies which show that Type B and C testing can detect a very large percentage of containment leaks. the Catawba Unit 1 experience has also been consistent with this.

The Nuclear Management and Resources Council (NUMARC), now the Nuclear Energy Institute (NEI), collected and provided the NRC staff with summaries of data to assist in the Appendix J rulemaking effort. NUMARC collected results of 144 ILRTs from 33 units; 23 ILRTs exceeded $1.0L_a$. Of these, only nine were not due to Type B or C leakage penalties. The NEI data also added another perspective. The NEI data show that in about one-third of the cases exceeding allowable leakage, the as-found leakage was less than $2L_a$; in one case the leakage was found to be approximately $2L_a$; in one case the as-found leakage was less than $3L_a$; one case approached $10L_a$; and in one case the leakage was found to be approximately $21L_a$. For about half of the failed ILRTs, the as-found leakage was not quantified. These data show that, for those ILRTs for which the leakage was quantified, the leakage values are small in comparison to the leakage value at which the risk to the public starts to increase over the value of risk corresponding to L_a (approximately $200L_a$, as discussed in NUREG–1493).

Based on generic and plant-specific data, the NRC staff finds the licensee's proposed one-time exemption to permit a schedular extension of one cycle for the performance of the Appendix Type A test to be acceptable.

Pursuant to 10 CFR 51.32, the Commission has determined that granting this exemption will not have a significant impact on the human environment (60 CFR 11125).

This exemption is effective upon issuance and shall expire at the completion of the 1996 refueling outage.

Dated at Rockville, Maryland, this 7th day of March 1995.

For the Nuclear Regulatory Commission.

John A. Zwolinski,

Acting Director, Division of Reactor Projects — I/II, Office of Nuclear Reactor Regulation.

[FR Doc. 95–6205 Filed 3–13–95; 8:45 am]

BILLING CODE 7590–01–M

Forrest L. Roudebush, Kansas City, Missouri; Order Prohibiting Involvement in NRC-Licensed Activities and Requiring Certain Notification to NRC

I

Mr. Forrest L. Roudebush has been, from its inception, the owner and president of Piping Specialists Incorporated (PSI or Licensee), also known as PSI Inspection, which was the holder of Byproduct Material License No. 24–24826–01 issued by the U.S. Nuclear Regulatory Commission (NRC or Commission) pursuant to 10 CFR Parts 30 and 34 on March 6, 1987. The license authorized the use of byproduct material (iridium-192 and cobalt-60) for industrial radiography in devices approved by the NRC or an Agreement State. The facility where licensed materials were authorized for storage was located at 1010 East 10th Street, Kansas City, Missouri. The use of licensed materials was authorized at temporary job sites anywhere in the United States that the NRC maintains jurisdiction for regulating the use of licensed materials. On October 17, 1991, the NRC staff issued an Order Suspending License (Effective Immediately) to PSI. On April 22, 1992, the NRC staff issued to PSI an Order Modifying Order Suspending License (Effective Immediately) and Order Revoking License. The revocation of the license was upheld by a decision of the NRC Atomic Safety and Licensing Board (ASLB), Piping Specialists, Inc. and Forrest L. Roudebush, LBP 92–25, 36 NRC 156 (1992), which the Commission declined to review, CLI–92–16, 36 NRC 351 (1992).

II

NRC Region III initiated an inspection of the Licensee on September 4, 1991, and on September 24, 1991, the NRC Office of Investigations (OI) commenced an investigation based on information received on August 29, 1991, that the PSI radiation safety program was not being conducted in compliance with NRC rules, regulations, and license

conditions. The inspection and investigation focused on the Licensee's compliance with NRC regulations, including possible willful violations involving: (1) False statements to NRC inspectors and investigators; (2) use of unauthorized and/or unqualified radiographer's assistants while conducting radiography; (3) preparation of false, inaccurate, and incomplete records; (4) failure to provide or use personnel dosimetry devices while conducting radiography; and (5) failure to survey and post radiation area boundaries to provide notice of radiation hazards to the public while performing radiography.

The OI investigation was completed on February 21, 1992, and identified the following deliberate violations of NRC requirements attributable to Mr. Roudebush:

A. In violation of 10 CFR 30.9, the PSI Radiation Safety Officer (RSO), with the prior knowledge of Mr. Roudebush, deliberately provided incomplete and inaccurate information to NRC inspectors during inspections conducted on March 21 and September 17–18, 1991. Specifically, the RSO presented to the inspectors the Licensee's utilization log, records of pocket dosimeter readings, and records of surveys of radiographic exposure devices performed at the time of the storage of the device at the end of the work day. Those records were neither complete nor accurate because: (1) The records did not document the Licensee's uses of the radiographic exposure devices which occurred during periods when the Licensee's personnel dosimetry service was interrupted due to the nonpayment of service fees; and (2) the information in the records had not been recorded daily as required, but instead, had been fabricated en masse shortly before the inspections. Further, the RSO and Mr. Roudebush knew that the records were inaccurate and that the records had been fabricated by the RSO immediately before the inspections.

B. In violation of 10 CFR 30.9, during an interview with OI on October 16, 1991, Mr. Roudebush, under oath, after defining a radiographer's assistant as one who "* * * handles and operates the enclosure, handle [sic] and operates the device, handles and operates the survey meter, takes charge of that dosimeter", denied to an OI investigator that he had performed work as a radiographer's assistant. This statement was deliberately false because during the NRC inspection conducted on September 17–18, 1991, Mr. Roudebush acknowledged that he had attached the control cable and guide tube to a radiographic exposure device and had exposed and retracted the source during radiographic operations. Mr. Roudebush was not qualified as a radiographer or assistant radiographer.

The investigation found other deliberate violations of NRC requirements, as well as a number of violations that in the aggregate represented a breakdown in the management of the PSI radiation safety program. Those violations are discussed in the October 17, 1991 Order Suspending License (Effective Immediately), EA 91–136; and the April 22, 1992 Order Modifying Order Suspending License (Effective Immediately) and Order Revoking License, EA 92–054. Those orders discuss why the staff does not have reasonable assurance that the licensee or Mr. Roudebush would comply with NRC requirements in the future.

The ASLB conducted a hearing from April 28 to May 1, 1992 on the October 17, 1991 Order Suspending License (Effective Immediately) and the April 22, 1992 Order Modifying Order Suspending License (Effective Immediately) and Order Revoking License.

The ASLB, in its Final Initial Decision (Revoking License), LBP–92–25, 36 NRC 156 (1992), stated:

> We conclude that there have been extensive failures on the part of PSI and Mr. Roudebush to comply with NRC regulations. The Board finds that the Licensee has failed to act as a reasonable manager of licensed activities; failed to detect and correct violations caused by an employee; willfully attempted to conceal violations from NRC Staff, and given untruthful information to the Staff during its inspections and investigations. Moreover, we find that Mr. Roudebush was untruthful in some aspects of his testimony both during a formal investigation and this Licensing Board. *Id.*, at 186.

Pursuant to a plea agreement, on August 18, 1994, Mr. Roudebush pled guilty in the U.S. District Court for the Western District of Missouri to one criminal count of violating Title 42, United States Code, Sections 2273 and 2201 (b) and (i) (§§ 161b, 161i, and 223 of the Atomic Energy Act). Specifically, the agreement describes the nature of the offense as the failure to provide dosimetry devices to employees. As a result, on December 12, 1994, an amended judgment was filed whereby Mr. Roudebush was sentenced to two years probation. The terms of the probation, in part, provide that Mr. Roudebush shall not apply for or obtain a license for radiography during the probation period.

III

Based on the above, the NRC concludes that Forrest L. Roudebush, the owner and president of PSI, engaged in deliberate misconduct that caused the Licensee to be in violation of 10 CFR 30.9, 30.10, and 34.33. Mr. Roudebush deliberately provided information to NRC inspectors and investigators that he knew to be incomplete or inaccurate in some material respect to the NRC, and Mr. Roudebush was deliberately untruthful during portions of his testimony to the ASLB, in violation of 10 CFR 30.9 and 30.10. Further, Mr. Roudebush deliberately failed to provide dosimetry devices to his employees, in violation of 10 CFR 34.33 and 30.10. The NRC must be able to rely on its licensees, including their officers and employees, to comply with NRC requirements, including the requirement to provide information and to maintain records that are complete and accurate in all respects material to the NRC. The deliberate actions of Forrest L. Roudebush in causing the Licensee to violate 10 CFR 30.9, 30.10, and 34.33, and his misrepresentations to the NRC have raised serious doubt as to whether he can be relied on to comply with NRC requirements and to provide complete and accurate information to the NRC.

Consequently, I lack the requisite reasonable assurance that Forrest L. Roudebush will conduct licensed activities in compliance with the Commission's requirements or that the health and safety of the public will be protected if Forrest L. Roudebush were permitted at this time to be involved in NRC-licensed activities. Therefore, the public health, safety and interest require that, for a period of five years from October 17, 1991, the date that the PSI license was suspended by Immediately Effective Order, Forrest L. Roudebush be prohibited from any involvement in NRC-licensed activities for either: (1) An NRC licensee, or (2) an Agreement State licensee performing licensed activities in areas of NRC jurisdiction in accordance with 10 CFR 150.20. In addition, for a period of five years commencing after completion of the five year period of prohibition, Mr. Roudebush must notify the NRC of his employment or involvement in NRC-licensed activities to ensure that the NRC can monitor the status of Mr. Roudebush's compliance with the Commission's requirements and his understanding of his commitment to compliance. If Mr. Roudebush is currently involved with another licensee in NRC-licensed activities, Mr. Roudebush must immediately cease such activities, and inform the NRC of

the name, address and telephone number of the employer, and provide a copy of this order to the employer.

IV

Accordingly, pursuant to sections 81, 161b, 161i, 182 and 186 of the Atomic Energy Act of 1954, as amended, and the Commission's regulations in 10 CFR 2.202, 10 CFR 30.10, and 10 CFR 150.20, *it is hereby ordered* that:

1. Forrest L. Roudebush is prohibited until October 17, 1996 from engaging in any NRC-licensed activities. NRC-licensed activities are those activities that are conducted pursuant to a specific or general license issued by the NRC, including, but not limited to, those activities of Agreement State licensees conducted pursuant to the authority granted by 10 CFR 150.20.

2. For a period of five years, beginning October 17, 1996, after the five-year period of prohibition has expired, Forrest L. Roudebush shall, within 20 days of his acceptance of each employment offer involving NRC-licensed activities or his becoming involved in NRC-licensed activities, as defined in Paragraph IV.1 above, provide notice to the Director, Office of Enforcement, U.S. Nuclear Regulatory Commission, Washington, D.C. 20555, of the name, address, and telephone number of the employer or the entity where he is, or will be, involved in the NRC-licensed activities. In the first such notification, Forrest L. Roudebush shall include a statement of his commitment to compliance with regulatory requirements and the basis why the Commission should have confidence that he will now comply with applicable NRC requirements.

3. If Forrest L. Roudebush is currently involved with any NRC licensee or Agreement State licensee engaging in NRC-licensed activities, then Forrest L. Roudebush must, as of the effective date of this Order, cease such activities and inform the NRC of the name, address and telephone number of the licensee, and provide a copy of this Order to the licensee.

The Director, Office of Enforcement, may, in writing, relax or rescind any of the above conditions upon demonstration by Mr. Roudebush of good cause.

V

In accordance with 10 CFR 2.202, Forrest L. Roudebush must, and any other person adversely affected by this Order may, submit an answer to this Order, and may request a hearing on this Order, within 20 days of the date of this Order. The answer may consent to this Order. Unless the answer consents to this Order, the answer shall, in writing and under oath or affirmation, specifically admit or deny each allegation or charge made in this Order and shall set forth the matters of fact and law on which Mr. Roudebush or other person adversely affected relies and the reasons as to why the Order should not have been issued. Any answer or request for a hearing shall be submitted to the Secretary, U.S. Nuclear Regulatory Commission, Attn: Chief, Docketing and Service Section, Washington, DC 20555. Copies also shall be sent to the Director, Office of Enforcement, U.S. Nuclear Regulatory Commission, Washington, DC 20555, to the Assistant General Counsel for Hearings and Enforcement at the same address, and to the Regional Administrator, NRC Region III, 801 Warrenville Road, Lisle, Illinois 60532–4531 if the answer or hearing request is by a person other than Mr. Roudebush. If a person other then Mr. Roudebush requests a hearing, that person shall set forth with particularity the manner in which his or her interest is adversely affected by this Order and shall address the criteria set forth in 10 CFR 2.714(d).

If a hearing is requested by Mr. Roudebush or a person whose interest is adversely affected, the Commission will issue an Order designating the time and place of any hearing. If a hearing is held, the issue to be considered at such hearing shall be whether, on the basis of the matters described in: (1) this Order; (2) EA 91–136; (3) EA 92–054; and (4) LBP–92–25, 36 NRC 156 (1992), this Order should be sustained.

In the absence of any request for hearing, the provisions specified in Section IV above shall be final 20 days from the date of this Order without further order or proceedings.

Dated at Rockville, Maryland this 3rd day of March 1995.

From the Nuclear Regulatory Commission.

Hugh L. Thompson, Jr.,

Deputy Executive Director for Nuclear Materials Safety, Safeguards and Operations Support.

[FR Doc. 95–6206 Filed 3–13–95; 8:45 am]

BILLING CODE 7590–01–M

NUCLEAR WASTE TECHNICAL REVIEW BOARD

Board Meeting: Waste Isolation Strategy, Thermal Management Strategy, The Engineered Barrier System

Pursuant to its authority under section 5051 of Public Law 100–203, the Nuclear Waste Policy Amendments Act of 1987, the Nuclear Waste Technical Review Board will hold its spring meeting on April 19–20, 1995, in Las Vegas, Nevada. The meeting will be held at the Holiday Inn Crowne Plaza, 4255 S. Paradise Road, Las Vegas, Nevada 89109; Tel. (702) 369–4400; Fax (702) 369–3770. The meeting is open to the public and will begin at 8:30 a.m. both days. Presentations during the meeting will address three main topics: The Department of Energy's (DOE) emerging waste isolation strategy; the DOE's thermal management strategy, including thermal testing planned or being conducted for the Yucca Mountain project; and engineered barrier system research, development, design, and analysis. Additional presentations also will provide updates on the DOE's perspectives concerning current legislative issues (fiscal year 1996 budget and initiatives to amend or replace the Nuclear Waste Policy Act).

Topics that will be covered on Wednesday, April 19, include the current status of the DOE's waste management program and its evolving waste isolation strategy, the linkage between the waste isolation strategy and site suitability, the fiscal year 1996 DOE budget, and thermal management strategy. An afternoon panel discussion will explore the integration of these topics. Prior to recessing for the day, those attending the meeting will be invited to direct questions or comments to the Board and the discussion panel members.

On Thursday, April 20, the meeting will focus on the engineered barrier system and include repository subsurface operations concepts, multipurpose container (MPC) interface with a potential repository, waste package design, engineered barrier system performance assessment, corrosion research, in-repository criticality, potential use of backfill, and in-repository shielding. Following a time for public questions and comments, a panel discussion will address the compatibility of waste package and engineered barrier designs with the DOE's concept of repository operations and thermal management strategies. A final period for public comment will end the meeting's activities.

The Nuclear Waste Technical Review Board was created by Congress in the Nuclear Waste Policy Amendments Act of 1987 to evaluate the technical and scientific validity of activities undertaken by the DOE in its program to manage the disposal of the nation's spent nuclear fuel and defense high-level waste. In that same legislation, Congress directed the DOE to characterize a site at Yucca Mountain,

Nevada, for its suitability as a potential location for a permanent repository for the disposal of that waste.

Transcripts of the meeting will be available on computer disk or on a library-loan basis in paper format from Victoria Reich, Board librarian, beginning June 2, 1995. For further information, contact Frank Randall, External Affairs, 1100 Wilson Boulevard, Suite 910, Arlington, Virginia 22209; Tel: 703–235–4473; Fax 703–235–4495.

Dated: March 9, 1995.

William Barnard,

Executive Director, Nuclear Waste Technical Review Board.

[FR Doc. 95–6234 Filed 3–13–95; 8:45 am]

BILLING CODE 6820–AM–M

SECURITIES AND EXCHANGE COMMISSION

[Release No. 34–35451; File No. SR–Amex–95–10]

Self-Regulatory Organizations; Notice of Filing of Proposed Rule Change by the American Stock Exchange, Inc. Relating to Amendments Updating Various Exchange Rules

March 7, 1995.

Pursuant to Section 19(b)(1) of the Securities Exchange Act of 1934 (''Act''), 15 U.S.C. 78s(b)(1), notice is hereby given that on February 22, 1995, the American Stock Exchange, Inc. (''Amex'' or ''Exchange'') filed with the Securities and Exchange Commission (''Commission'') the proposed rule change as described in Items I, II, and III below, which Items have been prepared by the self-regulatory organization. The Commission is publishing this notice to solicit comments on the proposed rule change from interested persons.

I. Self-Regulatory Organization's Statement of the Terms of Substance of the Proposed Rule Change

The Exchange proposes to amend several of its rules to reflect current practices and to update various rules that have become obsolete. The text of the proposed rule change is as follows [new text is italicized; deleted text is bracketed]:

Over-the-Counter Execution of Equity Securities Transactions

Rule 5.

(d)

[viii any acquisition of a security by a member organization as principal in anticipation of making an immediate special offering or exchange distribution on the Exchange under Rule 560 or Rule 570;]

[ix] *viii*

[x] *ix*

[xi] *x*

Precedence Accorded to Orders Entrusted to Specialists

Rule 155.

Commentary .01 [When a broker inquiries of a specialist as to the price at which a block of stock may be sold, the specialist may not specify the amount that would be purchased by the book and the amount he would take as dealer.]

If [the] *a* block is to be sold at a ''clean up'' price the specialist should execute at the ''clean-up'' price all of the executable buy orders on his book. The report of the block transaction on the tape is to be accompanied by a reprint of the last prior transaction in the regular-way market in the security.

However, if the block is sold at different price limits and the specialist buys part of the block for his own account he should to the extent practicable, buy round lots for his own account at each price limit at which buy orders on the book are executed, and in doing so, he should divide the stock purchased for his own account into round lots of approximately equal size among the price limits at which he participates.

The same principles apply in the case of a purchase of a block of stock.

Cancellations Must Be Written

Rule 181. A cancellation of an order given to a specialist on the Floor of the Exchange personally by a Regular member or member representative shall not be deemed effective unless in writing [and signed].

Specialist Registration Fee

Rule 183. Each regular specialist registered with the Exchange shall pay to the Exchange *each year* a registration fee [of $400.000 per year] *as imposed by the Exchange,* [which fee shall be] payable [in equal quarterly installments in each year] *as directed by the Exchange* during [which] *the year* such specialist remains so registered.

Specialist Clerks

Rule 184. (a) A specialist or specialist unit may regularly employ, subject to such rules and regulations as the Board of Governors may adopt, one or more clerks, to aid such specialist or specialist unit on the floor of the Exchange, provided each such clerk receives the approval of the Exchange. A *yearly* fee [of $180.00 per year,] *as imposed by the Exchange and* payable *as directed by the Exchange* [in equal quarterly installments,] shall be charged the specialist or specialist unit for each clerk. No rebate shall be given with respect to the [quarterly] fee in the event that a specialist or specialist unit discontinues the services of such a clerk during any [quarterly] period.

Normal Buy-Ins

Rule 783.

(d) The Buy-in Desk will deliver a copy of the Floor report to the booth of the member or member organization which initiated the order. The executing broker will have the responsibility of notifying promptly as to the details of the execution, the member or member organization listed on the order as being in default. [The member executing the order shall be entitled to receive a Floor brokerage commission.]

II. Self-Regulatory Organization's Statement of the Purpose of, and Statutory Basis for, the Proposed Rule Change

In its filing with the Commission, the self-regulatory organization included statements concerning the purpose of and basis for the proposed rule change and discussed any comments it received on the proposed rule change. The text of these statements may be examined at the places specified in Item IV below. The self-regulatory organization has prepared summaries, set forth in Sections A, B, and C below, of the most significant aspects of such statements.

A. Self-Regulatory Organization's Statement of the Purpose of, and Statutory Basis for, the Proposed Rule Change

1. Purpose

The Exchange proposes a rule change that would conform its rule to a comparable New York Stock Exchange (''NYSE'') rule, which recently has been amended. The Exchange proposes to amend Commentary .01 to Rule 155 (Precedence Accorded to Orders Entrusted to Specialists) to delete the prohibition that a specialist may not disclose the amount of stock that the specialist and the book would be buying or selling in cleaning up the block. This proposed rule change is similar to the NYSE amendment to its Rule 104.10(7), which has been approved by the Commission.[1]

The Exchange is also updating other rules to eliminate obsolete references and reflect accurately current Exchange practices. The references in Rule

[1] See Exchange Act Release No. 34231 (June 17, 1994), 59 FR 32722 (approving File No. SR–NYSE–90–10).

5(d)(viii) (Over-the-Counter Execution of Equity Securities Transactions) to Rules 560 and 570 are being deleted because Rules 560 and 570 have been rescinded. The Exchange is also deleting the signature requirement in Rule 181 (Cancellations Must Be Written) to reflect the current practice. The signature requirement, going back to the N.Y. Curb Exchange circa 1939, has not been deemed necessary on the Trading Floor in the era of the printed ticket.

The Exchange is also amending Rules 183 (Specialist Registration Fee) and 184 (Specialist Clerks) to eliminate out-of-date charges and timing of payments. The Exchange proposes to use general language in the rules to alleviate the need for repeated amendments to the Exchange Rules each time these fees are changed. The Exchange will make the necessary rule filings with the Commission before any fee changes become effective. The Exchange is also amendment Rule 783(d) (Normal Buy-Ins) to delete the reference to a member's entitlement to a Floor brokerage commission because the commissions are negotiated.

2. Statutory Basis

The proposed rule change is consistent with Section 6(b)(5) of the Act in that it is designed to prevent fraudulent and manipulative acts and practices and to perfect the mechanism of a free and open market.

B. Self-Regulatory Organization's Statement on Burden on Competition

The Exchange does not believe that the proposed rule change will impose any inappropriate burden on competition.

C. Self-Regulatory Organization's Statement on Comments on the Proposed Rule Change Received From Members, Participants, or Others

No written comments were either solicited or received.

III. Date of Effectiveness of the Proposed Rule Change and Timing for Commission Action

Within 35 days of the publication of this notice in the **Federal Register** or within such other period (i) as the Commission may designate up to 90 days of such date if it finds such longer period to be appropriate and publishes its reasons for so finding or (ii) as to which the self-regulatory organization consents, the Commission will:

(A) By order approve the proposed rule change, or

(B) Institute proceedings to determine whether the proposed rule change should be disapproved.

IV. Solicitation of Comments

Interested persons are invited to submit written data, views, and arguments concerning the foregoing. Persons making written submissions should file six copies thereof with the Secretary, Securities and Exchange Commission, 450 Fifth Street, N.W., Washington, D.C. 20549. Copies of the submission, all subsequent amendments, all written statements with respect to the proposed rule change that are filed with the Commission, and all written communications relating to the proposed rule change between the Commission and any person, other than those that may be withheld from the public in accordance with the provisions of 5 U.S.C. 552, will be available for inspection and copying at the Commission's Public Reference Section, 450 Fifth Street, N.W., Washington, D.C. 20549. Copies of such filing will also be available for inspection and copying at the principal office of the Exchange. All submissions should refer to File No. SR–Amex–95–10 and should be submitted by April 4, 1995.

For the Commission, by the Division of Market Regulation, pursuant to delegated authority.

Margaret H. McFarland,

Deputy Secretary.

[FR Doc. 95–6164 Filed 3–13–95; 8:45 am]

BILLING CODE 8010–01–M

[Release No. 34–35452; File No. SR–DTC–95–03]

Self-Regulatory Organizations; The Depository Trust Company; Notice of Filing and Immediate Effectiveness of Proposed Rule Change Clarifying Exclusion of Money Market Instrument Programs From DTC's Charge Back and Return of Funds Procedures for Erroneous or Improper Payments of Dividends and Interest and Redemption Proceeds

March 7, 1995.

Pursuant to Section 19(b)(1) of the Securities Exchange Act of 1934 (''Act''),[1] notice is hereby given that on January 31, 1995, The Depository Trust Company (''DTC'') filed with the Securities and Exchange Commission (''Commission'') the proposed rule change as described in Items I, II, and III below, which Items have been prepared primarily by DTC. The Commission is publishing this notice to solicit comments on the proposed rule change from interested persons.

I. Self-Regulatory Organization's Statement of the Terms of Substance of the Proposed Rule Change.

The proposed rule change clarifies that DTC's procedures for charging back from participants' accounts erroneous or improper payments of dividends and interest and redemption proceeds, as well as DTC's procedures for the subsequent return of such funds to payors,[2] do not apply to such payments made for instruments in DTC's Money Market Instrument (''MMI'') programs.[3]

II. Self-Regulatory Organization's Statement of the Purpose of, and Statutory Basis for, the Proposed Rule Change

In its filing with the Commission, DTC included statements concerning the purpose of and basis for the proposed rule change and discussed any comments it received on the proposed rule change. The text of these statements may be examined at the places specified in Item IV below. DTC has prepared summaries, set forth in sections (A), (B), and (C) below, of the most significant aspects of such statements.

(A) Self-Regulatory Organization's Statement of the Purpose of, and Statutory Basis for, the Proposed Rule Change

The purpose of the proposed rule change is to clarify that DTC's procedures for charging back from participants' accounts erroneous or improper payments of dividends and interest and redemption proceeds, as well as DTC's procedures for the subsequent return of funds to payors, do not apply to payments made for instruments in DTC's MMI programs. DTC's charge back and return of funds procedures do not apply to those instruments that are included in DTC's

[1] 15 U.S.C. 78s(b)(1) (1988).

[2] For a complete description of these procedures, refer to Securities Exchange Act Release Nos. 23219 (May 8, 1986), 51 FR 17845 [SR–DTC–86–03] (notice of filing and immediate effectiveness on a temporary basis of a proposed rule change implementing procedures for charging back erroneous dividend and interest payments from participants' accounts), 23686 (October 7, 1986), 51 FR 37104 [SR–DTC–86–04] (order approving proposed rule change implementing charge back procedures), and 26070 (September 9, 1988) 53 FR 36142 [SR–DTC–88–17] (notice of filing and immediate effectiveness of proposed rule change clarifying that charge back procedures apply to DTC's same-day funds settlement system as well as its next-day funds settlement system).

[3] For a complete description of DTC's MMI programs, refer to Securities Exchange Act Release No. 33958 (April 22, 1994), 59 FR 22878 [SR–DTC–93–12] (notice of order temporarily approving a proposed rule change expanding the Money Market Instrument Settlement Program).

MMI programs because MMIs are processed differently as discussed more fully below.

DTC sweeps maturing MMIs from the accounts of ''presenting participants'' and initiates book-entry deliveries versus payment to paying agents' accounts on maturity date for inclusion in that day's same-day settlement system net settlement. Paying agents can refuse to accept maturity presentments of an issuer's MMIs so long as the paying agents notify DTC of their intention by 3:00 p.m. Eastern Standard Time on the day the MMI matures. If a paying agent refuses to accept maturity presentments, DTC will communicate this to all DTC participants and will reverse the maturity presentments by recrediting the participants' accounts with the maturing MMI, thus offsetting settlement credits in those accounts. DTC also will unwind any other maturity presentments, valued issuance, periodic income payments (*e.g.,* interest or dividend), principal presentments, and reorganization presentments that it may have processed earlier that day in the same and other MMIs of a ''defaulting issuer.''

DTC believes that the proposed rule change is consistent with the requirements of Section 17A of the Act and the rules and regulations thereunder applicable to DTC because the proposal will improve the timeliness of dividend and redemption payments to DTC participants and will improve the processing and recordkeeping in the Dividends and Reorganization Departments of DTC and its participants. The proposed rule change also will improve the procedures for safeguarding funds in DTC's custody or control of for which it is responsible.

(B) Self-Regulatory Organization's Statement on Burden on Competition

DTC does not believe that the proposed rule change will impose any burden on competition not necessary or appropriate in furtherance of the purposes of the Act.

(C) Self-Regulatory Organization's Statement on Comments on the Proposed Rule Change Received from Members, Participants or Others

Written comments from DTC participants or others have not been solicited or received.

III. Date of Effectiveness of the Proposed Rule Change and Timing for Commission Action

The foregone rule change has become effective pursuant to Section 19(b)(3)(A)(i)[4] of the Act and Rule 19b-4(e)(1)[5] promulgated thereunder because it constitutes a state policy, practice, or interpretation with respect to the meaning, administration, or enforcement of DTC's existing procedures for the payment of dividends, interest, and redemption proceeds. At any time within sixty days of the filing of this proposed rule change, the Commission summarily may abrogate the rule change if it appears to the Commission that such action is necessary or appropriate in the public interests, for the protection of investors, or otherwise in furtherance of the proposed of the Act.

IV. Solicitation of Comments

Interested persons are invited to submit written data, views, and arguments concerning the foregoing. Persons making written submission should file six copies thereof with the Secretary, Securities and Exchange Commission, 450 Fifth Street, N.W., Washington, D.C. 20549. Copies of the submission, all subsequent amendments, all written statements with respect to the proposed rule change that are filed with the Commission, and all written communications relating to the proposed rule change between the Commission and any person, other than those that may be withheld from the public in accordance with the provisions of 5 U.S.C. 552, will be available for inspection and copying in the Commission's Public Reference Section, 450 Fifth Street, N.W., Washington, D.C. 20549. Copies of such filing will also be available for inspection at DTC. All submissions should refer to File No. SR–DTC–95–03 and should be submitted by April 13, 1995.

For the Commission by the Division of Market Regulation, pursuant to the delegated authority.[6]

Margaret H. McFarland,

Deputy Secretary.

[FR Doc. 95–6214 Filed 3–13–95; 8:45 am]

BILLING CODE 8010–01–M

[4] 15 U.S.C. 78s(b)(3)(A)(i) (1988).

[5] 17 CFR 240.19b–4(e)(1) (1994).

[6] 17 CFR 200.30–3(a)(12) (1994).

[Release No. 34–35450; File Nos. SR–NYSE–94–39; SR–Phlx–94–29; SR–PSE–94–34; SR–BSE–94–15; SR–CHX–94–28; SR–NASD–94–67; SR–CBOE–94–55]

Self-Regulatory Organizations; New York Stock Exchange, Inc., Philadelphia Stock Exchange, Inc., Pacific Stock Exchange, Inc., Boston Stock Exchange, Inc., Chicago Stock Exchange, Inc., National Association of Securities Dealers, Inc., and Chicago Board Options Exchange; Supplemental Order Regarding Recently Adopted Rules for Short Position Reporting

March 7, 1995.

I. Background

The New York Stock Exchange, Inc. (''NYSE''), on October 27, 1994, the Philadelphia Stock Exchange, Inc., (''Phlx''), on October 20, 1994, the Pacific Stock Exchange, Inc. (''PSE''), on November 23, 1994, the Boston Stock Exchange, Inc. (''BSE''), on November 28, 1994, the Chicago Stock Exchange, Inc. (''CHX''), on December 12, 1994, the National Association of Securities Dealers, Inc. (''NASD''), on December 2, 1994[1] and the Chicago Board Options Exchange (''CBOE''), on January 3, 1995, (collectively, ''self-regulatory organizations'' or ''SROs'') submitted to the Securities and Exchange Commission (''SEC'' or ''Commission''), pursuant to Section 19(b)(1) of the Securities Exchange Act of 1934 (''Act'')[2] and Rule 19b–4 thereunder,[3] proposed rule changes to facilitate uniform short position reporting requirements.[4]

The proposed rule change filed by the CBOE was published for comment in Securities Exchange Act Release No. 35227 (January 13, 1995), 60 FR 4208 (January 20, 1995). In addition, all of the other proposed rule changes were published for comment in Securities Exchange Act Release No. 35147 (December 23, 1994), 60 FR 518 (January 4, 1995). No comments were received on

[1] In addition, the NASD filed Amendment No. 1 on January 11, 1995, to clarify who must report to the NASD, what the entities must report, and the mechanics of how to transmit such report. Because the Amendment did not substantively change the proposal, the Commission did not publish it for comment. See letter from Joan C. Conley, Secretary, NASD, to Mark Barracca, Attorney, SEC, dated January 11, 1995.

[2] 15 U.S.C. 78s(b)(1) (1988).

[3] 17 CFR 240.19b–4 (1991).

[4] ''Short'' positions to be reported are those resulting from ''short'' sales as defined in SEC Rule 3b–3, but excludes positions resulting from sales specified in clauses (1), (6), (7), (8), (9) and (10) of paragraph (e) of SEC Rule 10a–1. Also to be excluded are ''short'' positions carried for other members and member organizations reporting for themselves.

the proposal from either notice publication.

The Commission issued an order on January 27, 1995, approving the proposed rule changes referenced above.[5]

II. Discussion

As explained in the Approval Order, the purpose of the rule changes is to ensure that all broker-dealers registered in the United States report open short positions to an SRO. The proposed rule changes emanated from an initiative by the SROs, as Intermarket Surveillance Group (''ISG'') members, to ensure uniform short position reporting in U.S. traded securities.

Substantively, the new reporting requirements will continue to include stocks and warrants, including odd-lots, in each such security traded on a United States securities exchange or association. Further, the reports will continue to include both customer and proprietary positions.

At the time the Approval Order was published, the Commission understood that broker-dealers with multiple proprietary accounts netted such accounts for purposes of reporting their short positions. In the interim, however, it has come to light that industry practice varies and that the preferred method is not to net multiple accounts. Specifically, the NYSE indicated in a letter submitted to the Commission on March 1, 1995, that ''firms will use the gross method of reporting short interest positions rather than netting.'' The remaining ISG participants that adopted the rules at hand have confirmed that industry practice should not be disrupted for purposes of reporting firm short interest positions. The NYSE requested that the Approval Order be modified to reflect industry practice at the time of the rule filing.[6]

The Commission notes that the method of calculation was not a determinative factor in the decision to approve the short interest reporting rules. Rather, the Commission's goal was to assure uniformity in the calculation of short positions to provide comparable information to the marketplace. In this regard, the Commission has not identified advantages of one method over the other and agrees that, consistent with industry practice, short interest positions for both like and non-like accounts may be reported gross for purposes of the new reporting requirements.

The Approval Order included an example to illustrate the method, net reporting, which the Commission understood to be the industry standard.[7] The modification requested by the NYSE would be reflected in this example by providing that the firm would not net its proprietary accounts.[8]

The Commission finds that the clarification does not alter the statutory basis relied upon in the Approval Order. The Commission continues to believe, therefore, that the short interest position reporting rules and methodology for such calculation as outlined herein is consistent with the requirements of the Act and the rules and regulations thereunder applicable to a national securities exchange, and, in particular, with the requirements of Section 6(b) and 15A.[9] In particular, the Commission believes the proposal is consistent with the Sections 6(b)(5) and 15A(b)(6) requirements that the rules of an exchange be designed to promote just and equitable principles of trade, to prevent fraudulent and manipulative acts, and, in general, to protect investors and the public, in that the proposal should enhance the ability of the SROs, both collectively and individually, to monitor short interest reporting, and to reinforce their regulatory and surveillance capabilities in this area.

III. Conclusion

It Is Therefore Ordered, pursuant to Section 19(b)(2) of the Act,[10] that the Approval Order is hereby revised as described above.

For the Commission, by the Division of Market Regulation, pursuant to delegated authority.[11]

Margaret H. McFarland,

Deputy Secretary.

[FR Doc. 95–6163 Filed 3–13–95; 8:45 am]

BILLING CODE 8010–01–M

[5] Securities Exchange Act Release No. 35287 (January 27, 1995), 60 FR 6743 (February 3, 1995) (''Approval Order'').

[6] See letter from Salvatore Pallante, Senior Vice President, Member Firm Regulation, NYSE, to Holly Smith, Associate Director, Division of Market Regulation, Commission, dated March 1, 1995.

[7] See Approval Order, footnote 7.

[8] The example in the Approval Order concerns a broker-dealer with three accounts—account 1 has short interest of 100 shares, account 2 has short interest of 225 shares and account 3 is long 150 shares. As indicated in the Approval Order, if the three accounts are for different customers then the broker-dealer shall report a gross short interest of 325 (not netted to 175). In contrast to the Approval Order, however, if account 1 is a firm customer account, and accounts 2 and 3 are firm proprietary accounts, the broker-dealer would still report total short interest of 325 (not netted to 75), as the broker-dealer would not net the firm's proprietary positions but would report a total gross short position (customer 100 and firm 225).

[9] 15 U.S.C. 78f(b) and 78o–3 (1988).

[10] 15 U.S.C. 78s(b)(2) (1988).

[11] 17 CFR 200.30–3(a)(12) (1994).

SMALL BUSINESS ADMINISTRATION

Reporting and Recordkeeping Requirements Under OMB Review

ACTION: Notice of reporting requirements submitted for review.

SUMMARY: Under the provisions of the Paperwork Reduction Act (44 U.S.C. Chapter 35), agencies are required to submit proposed reporting and recordkeeping requirements to OMB for review and approval, and to publish a notice in the **Federal Register** notifying the public that the agency has made such a submission.

DATE: Comments should be submitted within 30 days of this publication in the **Federal Register.** If you intend to comment but cannot prepare comments promptly, please advise the OMB Reviewer and the Agency Clearance Officer before the deadline.

COPIES: Request for clearance (OMB 83–1), supporting statement, and other documents submitted to OMB for review may be obtained from the Agency Clearance Officer. Submit comments to the Agency Clearance Officer and the OMB Reviewer.

FOR FURTHER INFORMATION CONTACT:

Agency Clearance Officer: Cleo Verbillis, Small Business Administration, 409 3rd Street, SW., 5th Floor, Washington, DC 20416, Telephone: (202) 205–6629.

OMB Reviewer: Donald Arbuckle, Office of Information and Regulatory Affairs, Office of Management and Budget, New Executive Office Building, Washington, DC 20503.

Title: Program Evaluation SBA 7(a) Loan Program.

Form No.: N/A.

Frequency: On Occasion.

Description of Respondents: 7(a) loan applicants.

Annual Responses: 1,700.

Annual Burden: 312.

Dated: March 2, 1995.

Calvin Jenkins,

Assistant Administrator for Administration.

[FR Doc. 95–6251 Filed 3–13–95; 8:45 am]

BILLING CODE 8025–01–M

[Declaration of Disaster Loan Area #2760; Amendment #3]

California; Declaration of Disaster Loan Area

The above-numbered Declaration is hereby amended, effective February 27, 1995, to include Kings County in the State of California as a disaster area due to damages resulting from winter storms causing flooding, landslides, mud and

debris flows beginning on January 3, 1995, and continuing.

All counties contiguous to Kings County have previously been declared.

All other information remains the same, i.e., the termination date for filing applications for physical damage is March 13, 1995, and for economic injury the deadline is October 10, 1995.

(Catalog of Federal Domestic Assistance Program Nos. 59002 and 59008.)

Dated: March 8, 1995.

Bernard Kulik,

Associate Administrator for Disaster Assistance.

[FR Doc. 95–6250 Filed 3–13–95; 8:45 am]

BILLING CODE 8025–01–M

[License No. 01/71–0363

Notice of Issuance of a Small Business Investment Company License

On November 7, 1994, a notice was published in the **Federal Register** (59 FR 55522) stating that an application had been filed by Pioneer Ventures Limited Partnership II, Boston, Massachusetts with the Small Business Administration (SBA) pursuant to Section 107.102 of the Regulations governing small business investment companies (13 CFR 107.102 (1994)) for a license to operate as a small business investment company.

Interested parties were given until close of business on November 22, 1994 to submit their comments to SBA. No comments were received. Notice is hereby given that, pursuant to Section 301(c) of the Small Business Investment Act of 1958, as amended, after having considered the application and all other pertinent information, SBA issued License No. 01/71–0363 on February 6, 1995, to Pioneer Ventures Limited Partnership II to operate as a small business investment company.

The Licensee will have initial private capital of $2.6 million and has commitments for additional capital which are expected to reflect total capital of $15.0 million when fully invested. The Licensee will be owned by institutional investors. Limited partners with a larger than 10% partnership interest include the Massachusetts Bay Transportation Authority Retirement Fund, Middlesex County Contributory Retirement System, The Pioneer Group, Inc., Worcester County Contributory Retirement System, and Cambridge Retirement System.

(Catalog of Federal Domestic Assistance Program No. 59.011, Small Business Investment Companies)

Dated: March 7, 1995.

Robert D. Stillman,

Associate Administrator for Investment.

[FR Doc. 95–6225 Filed 3–13–95; 8:45 am]

BILLING CODE 8025–01–M

OFFICE OF THE UNITED STATES TRADE REPRESENTATIVE

Negotiation of Chilean Accession to the North American Free Trade Agreement

AGENCY: Office of the United States Trade Representative.

ACTION: Notice of negotiations regarding Chile's entry into the North American Free Trade Agreement (NAFTA), notice of goods and services that may be covered by such negotiations, and of public hearings and request for public comment concerning such negotiations.

SUMMARY: This publication gives notice that the United States, along with the Governments of Canada and Mexico, expects to undertake negotiations with the Republic of Chile regarding its accession to (*i.e.*, inclusion in) the NAFTA. This publication also (1) identifies the range of Chilean articles (products) for which U.S. tariffs and non-tariff measures may be reduced or eliminated as a result of the negotiations; (2) provides notice of a request by the United States Trade Representative (the USTR) to the International Trade Commission (Commission) for advice concerning the economic effects of Chilean accession; and (3) gives notice that the Trade Policy Staff Committee (TPSC) invites public comments on, and will conduct public hearings concerning, the negotiations.

FOR FURTHER INFORMATION CONTACT: For procedural questions concerning public comments or public hearings, contact Carolyn Frank, Executive Secretary, Trade Policy Staff Committee, Office of the USTR, (202) 395–9557. All other questions should be directed to Jane Earley, Director for Chilean Affairs, (202) 395–5190, or James Southwick, Assistant General Counsel, (202) 395–7203.

SUPPLEMENTARY INFORMATION:

1. Background

The NAFTA entered into force between the United States, Canada, and Mexico on January 1, 1994. On December 11, 1994, President Clinton, and the heads of state of Canada, Chile, and Mexico agreed to begin the process by which Chile will accede to the NAFTA. The four governments plan to hold a ministerial meeting in May, 1995, concerning Chile's accession, and substantive negotiations may begin shortly thereafter.

2. Articles That May Be Considered in Trade Negotiations

All articles provided for in the Harmonized Tariff Schedule of the United States (HTSUS) that are products of Chile will be considered for duty reduction or elimination and for the elimination or reduction of non-tariff barriers.

3. Advice From the U.S. International Trade Commission

On March 7, 1995, under authority delegated by the President, the USTR requested the Commission, pursuant to section 332(g) of the Tariff Act of 1930 (codified at 19 U.S.C. 1332(g)), to provide advice to the President, with respect to each article listed in the HTSUS, as to the probable economic effect of (1) providing duty-free treatment for imports of products of Chile on industries in the United States producing like or directly competitive articles and on consumers; and (2) eliminating U.S. non-tariff measures that are inconsistent with the NAFTA. In addition, the USTR requested advice on the probable economic effect on U.S. exports to Chile of (3) the removal of Chilean import duties; and (4) the removal of Chilean nontariff measures that are inconsistent with the NAFTA. Finally, the USTR requested the Commission to provide a report on (5) the nature and extent of services transactions between the United States and Chile, the key U.S. services industries that export services to Chile, the principal barriers impeding the participation of U.S. service providers in the Chilean market, and the effect of such barriers on U.S. services providers.

The USTR requested the Commission to provide its advice as soon as possible, but no later than six months after the date of the letter.

4. Public Comments and Testimony

In conformity with TPSC regulations (15 CFR part 2003), the Chairman of the TPSC invites written comments and/or oral testimony of interested persons in a public hearing on the desirability and economic effects of Chilean accession to the NAFTA.

Comments are particularly invited on:

(a) Economic costs and benefits to U.S. producers and consumers of removal of all tariff barriers to trade between Chile and the United States and between and among Chile and the current NAFTA parties and, in the case of articles for which immediate

elimination of tariffs is not appropriate, the appropriate staging schedule for such elimination.

(b) Existing nontariff barriers to trade in goods between Chile and the United States and between and among Chile and the current NAFTA parties and the economic costs and benefits to U.S. producers and consumers of removing those barriers.

(c) Existing barriers to trade in services between Chile and the United States and between and among Chile and the current NAFTA parties, and economic costs and benefits to U.S. services firms and consumers of removing such barriers.

(d) Existing restrictions on investment flows between Chile and the United States and between and among Chile and the current NAFTA parties, and the costs and benefits to U.S. investors and consumers of eliminating such restrictions.

(e) Any other measures, policies, or practices of the Government of Chile falling within the scope of the NAFTA that should be addressed in the negotiations.

In addition, comments are invited on the possible environmental effects of Chile's accession to the NAFTA, as well as the possible effects on basic workers' rights, working conditions, and living standards.

5. Requests to Participate in Public Hearings

A hearing will be held on Tuesday, April 25, 1995 in the Truman Room, White House Conference Center, 726 Jackson Place, Washington, DC. Hearings will continue on succeeding days if necessary.

Parties wishing to testify orally at the hearings must provide written notification of their intention by noon, Friday, April 14, 1995 to Carolyn Frank, Executive Secretary, Trade Policy Staff Committee, Office of the United States Trade Representative, 600 Seventeenth Street, N.W., Washington, D.C. 20506. The notification should include (1) the name, address, and telephone number of the person presenting the testimony; and (2) a brief summary of the presentation, including the product(s) (with HTSUS numbers), service sector(s), or other subjects to be discussed.

Parties presenting oral testimony must also submit to the above address by noon, Friday, April 14, 1995 a written brief, in 20 copies. Remarks at the hearing should be limited to no more than five minutes to allow for possible questions from the Chairman and the interagency panel. Participants should provide 30 typed copies of their oral statement at the time of the hearings.

Any business confidential material must be clearly marked as such on the cover page (or letter) and succeeding pages. Such submissions must be accompanied by a nonconfidential summary of the confidential information.

6. Written Comments

Those persons not wishing to participate in the hearing may submit written comments, in 20 typed copies, no later than noon, Friday, April 28, 1995 to Carolyn Frank, Executive Secretary, Trade Policy Staff Committee, Office of the United States Trade Representative, 600 Seventeenth Street, N.W., Washington, D.C. 20506. Comments should state clearly the position taken and should describe with particularity the evidence supporting that position. Any business confidential material must be clearly marked as such on the cover page (or letter) and succeeding pages. Such submissions must be accompanied by a nonconfidential summary of the confidential information.

Nonconfidential submissions will be available for public inspection at the USTR Reading Room, Room 101, Office of the United States Trade Representative, 600 Seventeenth Street, N.W., Washington, D.C. An appointment to review the file may be made by calling Brenda Webb (202) 395–6186. The Reading Room is open to the public from 10 a.m. to 12 noon and from 1 p.m. to 4 p.m. Monday through Friday.

Frederick L. Montgomery,

Chairman, Trade Policy Staff Committee.

[FR Doc. 95–6154 Filed 3–13–95; 8:45 am]

BILLING CODE 3190–01–M

DEPARTMENT OF TRANSPORTATION

Federal Aviation Administration

Notice of Passenger Facility Charge (PFC) Approvals and Disapprovals

AGENCY: Federal Aviation Administration (FAA), DOT.

ACTION: Monthly Notice of PFC Approvals and Disapprovals. In February 1995, there were six applications and one amendment approved.

SUMMARY: The FAA publishes a monthly notice, as appropriate, of PFC approvals and disapprovals under the provisions of 49 U.S.C. 40117 (Pub. L. 103–272) and Part 158 of the Federal Aviation Regulations (14 CFR Part 158). This notice is published pursuant to paragraph d of § 158.29.

PFC Applications Approved

Public Agency: City of Austin, Austin, Texas.

Application Number: 95–03–C–00–AUS.

Application Type: Impose and use PFC revenue.

PFC Level: $3.00.

Total Approved Net PFC Revenue: $1,199,000.

Charge Effective Date: July 1, 1995.

Estimated Charge Expiration Date: September 1, 1995.

Class of Air Carriers Not Required to Collect PFC's: On-demand air taxi/commercial operators that (1) do not enplane or deplane at Robert Mueller Municipal Airport's (AUS) main terminal building or (2) enplane fewer than 500 passengers per year at AUS.

Determination: Approved. Based on information submitted in the City of Austin's application, the FAA has determined that the proposed class accounts for less than 1 percent of the total annual enplanements at AUS.

Brief Description of Project Approved for Collection and Use:

East perimeter road pavement rehabilitation,
Terminal apron lighting upgrade,
Airfield pavement rehabilitation,
Airfield security fence replacement/rehabilitation,
Runway 13R/31L surface roughness remediation.

Decision Date: February 8, 1995.

For Further Information Contact: Ben Guttery, Southwest Region Airports Division, (817) 222–5614.

Public Agency: Indian Wells Valley Airport District, Inyokern, California.

Application Number: 95–02–C–00–IYK.

Application Type: Impose and use PFC revenue.

PFC Level: $3.00.

Total Approved Net Use PFC Revenue: $248,500.

Estimated Charge Effective Date: September 1, 1995.

Estimated Charge Expiration Date: September 1, 1999.

Class of Air Carriers Not Required to Collect PFC's: Unscheduled air taxi/commercial operators not providing scheduled service to Inyokern Airport (IYK).

Determination: Approved. Based on information submitted in the Indian Wells Valley Airport District's application, the FAA has determined the proposed class accounts for less than 1 percent of IYK's total annual enplanements.

Brief Description of Project Approved for Use: Terminal renovations.

Brief Description of Projects Approved for Collection and Use:

Construct parking lot and airport road extention,

Purchase hydraulic passenger lift.

Brief Description of Project Approved for Collection: Overlay taxiways.

Decision Date: February 11, 1995.

For Further Information Contact: John P. Milligan, Western Pacific Region Airports Division, (310) 297–1029.

Public Agency: City of Riverton, Riverton, Wyoming.

Application Number: 95–01–I–00–RIW.

Application Type: Impose PFC.

PFC Level: $3.00.

Total Approved Net PFC Revenue: $515,955.

Charge Effective Date: May 1, 1995.

Estimated Charge Expiration Date: March 1, 2007.

Class of Air Carriers Not Required to Collect PFC's: None.

Brief Description of Projects Approved to Impose: New terminal development and equipment acquisition.

Decision Date: February 14, 1995.

For Further Information Contact: Don O'Brien, Denver Airports District Office, (303) 286–5549.

Public Agency: Little Rock Regional Airport, Little Rock, Arkansas.

Application Number: 95–01–I–00–LIT.

Application Type: Impose PFC.

PFC Level: $3.00.

Total Approved Net PFC Revenue: $32,765,055.

Charge Effective Date: May 1, 1995.

Estimated Charge Expiration Date: June 1, 2003.

Class of Air Carriers Not Required to Collect PFC'S: Air taxi/commercial operators filing FAA Form 1800–31.

Determination: Approved. Based on information submitted in the Little Rock Regional Airport's application, the FAA has determined that the proposed class accounts for less than 1 percent of Little Rock Regional Airport-Adams Field's total annual enplanements.

Brief Description of Project Approved for Collection: Extend runway 4L/22R.

Brief Description of Project Approved, in Part, for Collection: Prepare site for approach lighting system with sequenced flashers (ALSF–II) and for Category III instrument landing system (ILS) on runway 22R.

Determination: The project meets the nominal requirements for AIP eligibility as an incidental cost related to the extension of runway 4L/22R; however, those costs specifically associated with the upgraded preparation for the ALSF–II and CAT III ILS are not eligible in accordance with paragraph 513 of the AIP Handbook.

Decision Date: February 23, 1995.

For Further Information Contact: Ben Guttery, Southwest Region Airports Division, (817) 222–5614.

Public Agency: Milwaukee County Airport Division, Milwaukee, Wisconsin.

Application Number: 95–01–C–00–MKE.

Application Type: Impose and use PFC revenue.

PFC Level: $3.00.

Total Approved Net PFC Revenue: $28,785,277.

Charge Effective Date: May 1, 1995.

Estimated Charge Expiration Date: April 1, 1999.

Class of Air Carriers Not Required To Collect PFC's: Air taxi/commercial operators exclusively filing FAA Form 1800–31.

Determination: Approved. Based on information submitted in the Milwaukee County Airport Division's application, the FAA has determined that the proposed class accounts for less than 1 percent of General Mitchell International Airport's (MKE) total annual enplanements.

Brief Description of Projects Approved for Collection and Use at MKE:

Acquire scattered homes within runway protection zone and 70 LDN,

Noise monitoring/flight track system,

Cargo apron expansion—phase I,

Replacement equipment,

Acquire undeveloped land zoned for residential use,

Terminal apron rehabilitation,

Surface movement guidance control system (design),

Perimeter fencing replacement,

Rehabilitate west fixed base operator apron.

Brief Description of Project Approved to Impose a PFC at MKE and use PFC Revenue at Lawrence J. Timmerman Airport: Install pavement sensors.

Brief Description of Projects Approved for Collection Only at MKE:

Storm water and deicing system—design and construction—phase III,

Sales assistance in runway C–1 area,

Realign runway 7L–25R.

Decision Date: February 24, 1995.

For Further Information Contact: Franklin Benson, Minneapolis Airports District Office, (612) 725–4221.

Public Agency: City of Philadelphia, Department of Commerce, Division of Aviation (DOA), Philadelphia, Pennsylvania.

Application Number: 95–03–C–00–PHL.

Application Type: Impose and use PFC revenue.

PFC Level: $3.00.

Total Approved PFC Revenue: $65,500,000.

Charge Effective Date: July 1, 1995.

Estimated Charge Expiration Date: September 1, 1997.

Class of Air Carriers Not Required to Collect PFC's: Air taxi/commercial operators filing FAA Form 1800–31.

Determination: Approved. Based on information submitted in the DOA's application, the FAA has determined that the proposed class accounts for less than 1 percent of Philadelphia International Airport's total annual enplanements.

Brief Description of Projects Approved for Collection and Use:

Terminals B, C, D, and E general renovations,

Terminals A and E expansion and upgrade.

Brief Description of Projects Approved for Use:

Airfield expansion—land acquisition,

Terminals B and C improvements,

Terminals D and E improvements.

Decision Date: February 27, 1995.

For Further Information Contact: L.W. Walsh, Harrisburg Airports District Office, (717) 975–3413.

AMENDMENT TO PFC APPROVALS

Amendment No: City, State	Amendment approved date	Amended approved net PFC revenue	Original approved net PFC revenue	Original estimated charge exp. date	Amended estimated charge exp. date
93–01–C–01–EAT, East Wenatchee, WA	02/15/95	$622,488	$280,500	10/01/95	10/01/00

Issued in Washington, DC on March 7, 1995.

Kendall L. Ball,

Passenger Facility Charge Branch.

[FR Doc. 95–6275 Filed 3–13–95; 8:45 am]

BILLING CODE 4910–13–M

Notice of Passenger Facility Charge (PFC) Approvals and Disapprovals

AGENCY: Federal Aviation Administration (FAA), DOT.

ACTION: Monthly Notice of PFC Approvals and Disapprovals. In January 1995, there were seven applications and two amendments approved.

SUMMARY: The FAA publishes a monthly notice, as appropriate, of PFC approvals and disapprovals under the provisions of 49 U.S.C. 40117 (Pub. L. 103–272 and Part 158 of the Federal Aviation Regulations (14 CFR Part 158). This notice is published pursuant to paragraph d of § 158.29.

PFC Application Approved

Public Agency: Rock Springs-Sweetwater County Airport Board, Rock Springs, Wyoming.

Application Number: 95–01–C–00–RKS.

Application Type: Impose and use PFC revenue.

PFC Level: $3.00.

Total Approved Net PFC Revenue: $332,500.

Charge Effective Date: April 1, 1995.

Estimated Charge Expiration Date: May 1, 2002.

Classes of Air Carriers Not Required to Collect PFC's: (1) Air taxi/commercial operators filing FAA Form 1800–31 and (2) foreign air carriers.

Determination: Approved. Based on information submitted in the Rock Springs-Sweetwater County Airport Board's application, the FAA has determined that each proposed class accounts for less than 1 percent of the total annual enplanements at Rock Springs-Sweetwater County Airport.

Brief Description of Project Approved for Collection and Use: Replace terminal building roof and acquire lift device.

Decision Date: January 3, 1995.

FOR FURTHER INFORMATION CONTACT: Don O'Brien, Denver Airports District Office, (303) 286–5549.

Public Agency: City of Killeen, Texas.

Application Number: 95–02–C–00–ILE.

Application Type: Impose and use PFC revenue.

PFC Level: $3.00.

Total Approved Net PFC Revenue: $321,200.

Charge Effective Date: April 1, 1995.

Estimated Charge Expiration Date: May 1, 1997.

Class of Air Carriers Not Required to Collect PFC's: Part 135 air charter operators.

Determination: Approved. Based on information submitted in the City of Killeen's application, the FAA has determined the proposed class accounts for less than 1 percent of Killeen Municipal Airport's total annual enplanements.

Brief Description of Projects Approved for Collection and Use:

Airport drainage,
Security fencing (safety fencing),
Runway extension study,
Terminal building master plan,
Signage and graphics,
Fog seal and paint runway (slurry seal),
Reconstruct air carrier concrete ramp,
Reconstruct taxiway A and associated ramp,
Fog seal taxiway B (slurry seal),
Canopy and landscaping,
Distance remaining signs,
Taxiway G repair,
Upgrade lighting, fog seal and paint terminal ramp (slurry seal).

Brief Description of Projects Approved for Collection and Use: Access road to fuel area.

Determination: Disapproved. The FAA has determined that this project is not Airport Improvement Program (AIP) eligible in accordance with Appendix 3, FAA Order 5100.38A, which specifically excludes fuel farms from AIP eligibility.

Construct parking lot.

Determination: Disapproved. The FAA has determined that this project is not AIP eligible in accordance with 49 U.S.C. 47110, as amended by Public Law No. 103–305 (August 23, 1994), and section 158.15(b)(6), which specifically exclude employee automobile parking facilities from eligibility.

Decision Date: January 6, 1995.

FOR FURTHER INFORMATION CONTACT: Ben Guttery, Southwest Region Airports Division, (817) 222–5614.

Public Agency: Spokane Airport Board, Spokane, Washington.

Application Number: 95–02–C–00–GEG.

Application Type: Impose and use PFC revenue.

PFC Level: $3.00.

Total Approved Net PFC Revenue: $8,200,000.

Charge Effective Date: April 1, 1998.

Estimated Charge Expiration Date: May 1, 2000.

Classes of Air Carriers Not Required to Collect PFC's: None.

Brief Description of Projects Approved for Collection and Use:

SIA access road improvements,
Aircraft deicing facility,

Decision Date: January 20, 1995.

FOR FURTHER INFORMATION CONTACT: Paul Johnson, Seattle Airports District Office, (206) 227–2650.

Public Agency: Lehigh-Northampton Airport Authority, Allentown, Pennsylvania.

Application Number: 94–03–U–00–ABE.

Application Type: Use PFC revenue.

PFC Level: $3.00.

Total Approved Net PFC Revenue: $4,350,000.

Charge Effective Date: November 1, 1992.

Estimated Charge Expiration Date: July 1, 1996.

Class of Air Carriers Not Required To Collect PFC's: The Lehigh-Northampton Airport Authority has previously been approved to exclude air taxi/commercial operators filing FAA Form 1800–31 in the FAA's August 28, 1992, Record of Decision.

Determination: No change from previously approved application.

Brief Description of Project Approved for Use: Design and construct satellite terminal expansion.

Decision Date: January 20, 1995.

For Further Information Contact: L.W. Walsh, Harrisburg Airports District Office, (717) 782–4548.

Public Agency: Jackson Hole Airport Board (Board), Jackson, Wyoming.

Application Number: 94–02–C–00–JAC.

Application Type: Impose and use PFC revenue.

PFC Level: $3.00

Total Approved PFC Revenue: $1,000,000.

Charge Effective Date: April 1, 1995

Estimated Charge Expiration Date: December 1, 1997.

Class of Air Carriers Not Required To Collect PFC's: None.

Brief Description of Projects Approved for Collection and Use:

Safety equipment,
Terminal baggage improvements.

Brief Description of Project Disapproved: Terminal building expansion.

Determination: Disapproved. This project was originally included in the Board's first PFC application. However, on September 26, 1994, the Board amended their first application and deleted this project. The Board justified deleting this project in the amendment, stating that it could not begin implementation within the regulatory timeframe due to the need to complete a master plan update and address local community concerns. Given the nature

of the community concerns cited by the Board in its amendment, the FAA has no assurance that the project will be implemented until the community involvement and all other concerns associated with the ongoing master plan update are addressed. Therefore, the FAA is disapproving this project at this time.

Brief Description of Project Withdrawn: Runway safety project.

Determination: This project was withdrawn by the Jackson Hole Airport Board by letter dated October 25, 1994.

Decision Date: January 25, 1995.

For Further Information Contact: Philip Braden, Denver Airports District Office, (303) 286–5530.

Public Agency: Charlottesville-Albermarle Airport Authority, Charlottesville, Virginia.

Application Number: 94–05–I–00–CHO.

Application Type: Impose PFC revenue.

PFC Level: $3.00.

Total Approved Net PFC Revenue: $1,524,300.

Charge Effective Date: April 1, 1995.

Estimated Charge Expiration Date: April 1, 1999.

Classes of Air Carriers Not Required To Collect PFC's: (1) Air taxi/commercial operators filing FAA Form 1800–31 and (2) foreign air carriers.

Determination: Approved. Based on information submitted in the Charlottesville-Albermarle Airport Authority's application, the FAA has determined that each proposed class accounts for less than 1 percent of the Charlottesville-Albermarle Airport's total annual enplanements.

Brief Description of Projects Approved for Collection Only:

Acquire snow blower and broom,
Snow loader/plow,
Overlay runway 3–21,
Runway deicing vehicle,
Aircraft rescue and firefighting vehicle,
Extend runway 3, safety area.

Decision Date: January 26, 1995.

For Further Information Contact: Robert Mendez, Washington Airports District Office, (703) 285–2570.

Public Agency: Sarasota Manatee Airport Authority, Sarasota, Florida.

Application Number: 95–02–U–00–SRQ.

Application Type: Use PFC revenue.

PFC Level: $3.00.

Total Approved Net PFC Revenue: $38,715,000.

Charge Effective Date: September 1, 1992.

Estimated Charge Expiration Date: September 1, 2005.

Class of Air Carriers Not Required To Collect PFC's: The Sarasota Manatee Airport Authority has previously been approved to exclude air taxi/commercial operators filing FAA Form 1800–31.

Determination: No change from previously approved application.

Brief Description of Projects Approved for Use:

Federal Aviation Regulations Part 150 program funding,
Environmental assessment,
Runway protection zone land acquisition,
Rehabilitate taxiway ''A'',
Rehabilitate taxiway ''F'' (formerly taxiway ''I'').

Decision Date: January 31, 1995.

For Further Information Contact: Pegy Jones, Orlando Airports District Office, (407) 648–6582.

AMENDMENTS TO PFC APPROVALS

Amendment No.: City, state	Amendment approved date	Amended approved net PFC revenue	Original approved net PFC revenue	Estimated charge exp. date	Amended estimated charge exp. date
92–01–C–01–TWF, Twin Falls, ID	01/09/95	$310,500	$270,000	05/01/98	05/01/98
93–02–U–01–TUL, Tulsa, OK	12/06/94	$14,818,000	$8,450,000	08/01/94	03/01/96

Issued in Washington, D.C. on March 7, 1995.

Kendall L. Ball,

Passenger Facility Charge Branch.

[FR Doc. 95–6276 Filed 3–13–95; 8:45 am]

BILLING CODE 4910–13–M

Federal Highway Administration

Environmental Impact Statement: City of Charlottesville and Albemarle County, VA

AGENCY: Federal Highway Administration, DOT.

ACTION: Cancellation of the Notice of Intent.

SUMMARY: This notice rescinds the previous Notice of Intent issued on October 3, 1984, to prepare an environmental impact statement for a proposal to provide a four-lane divided facility from the intersection of existing McIntire Road and Preston Avenue to an intersection with Rio Road. The proposed highway project involved in part the upgrading of an existing two-lane facility to a four-lane divided roadway. The remaining part of the proposed highway project called for a four-lane facility on new location.

FOR FURTHER INFORMATION CONTACT: Mr. Bruce Turner, Transportation Planner, Federal Highway Administration, 1504 Santa Rosa Road, Suite 205, Richmond, Virginia 23229, Telephone (804) 281–5111.

SUPPLEMENTARY INFORMATION: When the Notice of Intent was published, there was reason to believe that one or more of the alternatives might significantly affect the environment. However, after conducting exhaustive environmental studies of all the alternatives under consideration, documenting this information in a draft Environmental Impact Statement, circulating the draft EIS for comment, and holding the location public hearing, a reduced alternative without any significant environmental impacts was selected to meet the proposed project's purpose and need.

Therefore, in accordance with Federal regulations, the selected alternative is considered a Class III Action, and the assessment of the environmental impacts will be finalized and documented with an Environmental Assessment.

J. Bruce Turner,

Transportation Planner, Richmond, Virginia.

[FR Doc. 95–6182 Filed 3–13–95; 8:45 am]

BILLING CODE 4910–22–M

Federal Railroad Administration

Notice of Application for Approval of Discontinuance or Modification of a Railroad Signal System or Relief from the Requirements of 49 CFR Part 236

Pursuant to 49 CFR Part 235 and 49 U.S.C. App. 26, the following railroads have petitioned the Federal Railroad Administration (FRA) seeking approval for the discontinuance or modification of the signal system or relief from the requirements of 49 CFR Part 236 as detailed below.

Block Signal Application (BS–AP)—No. 3340

Applicants: Consolidated Rail Corporation, Mr. J. F. Noffsinger, Chief Engineer—C&S, 2001 Market Street, P.O. Box 41410, Philadelphia, Pennsylvania 19101–1410; Norfolk Southern Railway Company, Mr. J. W. Smith, Chief Engineer—C&S, Communication and Signal Department, 99 Spring Street, S.W., Atlanta, Georgia 30303.

The Consolidated Rail Corporation (Conrail) and Norfolk Southern Railway Company jointly seek approval of the proposed discontinuance and removal of ''Hager'' Interlocking, milepost 74.8, at Hagerstown, Maryland, Conrail's Harrisburg Division. The proposed changes consist of the discontinuance and removal of the power-operated derail and two interlocking signals, associated with track reconfiguration and installation of a traffic control system on the No. 1 Running Track between milepost 74.8 and ''Town'' Interlocking, milepost 73.7.

The reasons given for the proposed changes is to retire facilities no longer required for present operation while upgrading the signal system and improving train operations in the area.

BS–AP—No. 3341

Applicant: Burlington Northern Railroad Company, Mr. William G. Peterson, Director Signal Engineering, 9401 Indian Creek Parkway, Overland Park, Kansas 66210–9136.

The Burlington Northern Railroad Company seeks approval of the proposed modification of the automatic block signal system on the single main track, between Singleton, milepost 130.0 and Iola, milepost 147.0, Texas, and between Corsicana, milepost 242.0 and Bardwell, milepost 259.0, Texas, on the Southern Corridor, Ft. Worth Division, Houston Subdivision; consisting of the removal of 16 automatic signals, removal of 3 absolute signals, and installation of 19 automatic signals.

The reason given for the proposed changes is to respace signals associated with the installation of coded track circuits.

BS–AP—No. 3342

Applicant: Burlington Northern Railroad Company, Mr. William G. Peterson, Director Signal Engineering, 9401 Indian Creek Parkway, Overland Park, Kansas 66210–9136.

The Burlington Northern Railroad Company seeks approval of the proposed modification of the automatic block signal system, on the main track, between Auburn, milepost 21.3 and Puyallup, milepost 30.6, Washington, on the Northern Corridor, Pacific Division, Seattle Subdivision; consisting of the discontinuance and removal of 11 electric locks from 11 hand-operated switches.

The reasons given for the proposed changes is that the ABS territory does not require the application of electric locks at these locations, also these locks were installed at a time when foreign railroads used these locks for entering the main line and this condition no longer exists.

BS–AP—No. 3343

Applicant: Burlington Northern Railroad Company, Mr. William G. Peterson, Director Signal Engineering, 9401 Indian Creek Parkway, Overland Park, Kansas 66210–9136.

The Burlington Northern Railroad Company seeks approval of the proposed modification of the traffic control system, on the single main track, at Tupelo, Mississippi, between milepost 584.5 and milepost 588.0, on the Southern Corridor, Memphis Division, Birmingham Subdivision; consisting of the removal of controlled signals 138L, 138RA, and 138RB, removal of automatic signals 5859 and 5846, and installation of two intermediate automatic signals back to back near milepost 585.7.

The reason given for the proposed changes is the upgrading of the crossing signals to motion detecting control and the existing crossing control cutouts are no longer required.

BS–AP—No. 3344

Applicant: Consolidated Rail Corporation, Mr. J. F. Noffsinger, Chief Engineer—C&S, 2001 Market Street, P.O. Box 41410, Philadelphia, Pennsylvania 19101–1410.

The Consolidated Rail Corporation seeks approval of the proposed modification and reduction of the eastward limits of ''MO'' Interlocking, milepost 250.5, at Cresson, Pennsylvania, Pittsburgh Line, Harrisburg Division; consisting of the conversion of ''Old No. 1'' power-operated switch on the ''0'' track to hand operation, and the discontinuance and removal of interlocking signals 12W, 12E and 6L.

The reason given for the proposed changes is to retire facilities no longer required for present operation.

BS–AP–No. 3345

Applicant: CSX Transportation, Incorporated, Mr. D. G. Orr, Chief Engineer—Train Control, 500 Water Street (S/C J–350), Jacksonville, Florida 32202.

CSX Transportation, Incorporated seeks approval of the proposed modification of the signal system, on the two main tracks, between Leewood, milepost F372.38 and Aulon, milepost F374.50, Tennessee, Nashville Division, Memphis Subdivision; consisting of the discontinuance and removal of automatic signals 372.9 and 374.4.

The reason given for the proposed changes is to improve operations and increase efficiency.

BS–AP—No. 3346

Applicant: Soo Line Railroad Company, Mr. J. C. Thomas, Manager S&C Maintenance, 105 South 5th Street, Box 530, Minneapolis, Minnesota 55440.

The Soo Line Railroad Company seeks approval of the proposed discontinuance and removal of the Conley frog locks on the movable bridge at LaCrosse, Wisconsin, Heartland Division, Tomah Subdivision.

The reason given for the proposed changes is to reduce maintenance costs associated with maintaining the frog locks, which are not required to be in compliance with applicable rule Part 236.312.

BS–AP—No. 3347

Applicant: Soo Line Railroad Company, Mr. J. C. Thomas, Manager S&C Maintenance, 105 South 5th Street, Box 530, Minneapolis, Minnesota 55440.

The Soo Line Railroad Company seeks approval of the proposed discontinuance and removal of the Conley frog locks on the movable bridge at Hastings, Minnesota, Heartland Division, River Subdivision.

The reason given for the proposed changes is to reduce maintenance costs associated with maintaining the frog locks, which are not required to be in compliance with applicable rule Part 236.312.

BS–AP—No. 3348

Applicant: Soo Line Railroad Company, Mr. J. C. Thomas, Manager S&C Maintenance, 105 South 5th Street, Box 530, Minneapolis, Minnesota 55440.

The Soo Line Railroad Company seeks approval of the proposed discontinuance and removal of the Conley frog locks on the movable bridge at Sabula, Iowa, Gateway Division, Davenport Subdivision.

The reason given for the proposed changes is to reduce maintenance costs associated with maintaining the frog locks, which are not required to be in compliance with applicable rule Part 236.312.

BS–AP—No. 3349

Applicant: Consolidated Rail Corporation, Mr. J. F. Noffsinger, Chief Engineer—C&S, 2001 Market Street, P.O. Box 41410, Philadelphia, Pennsylvania 19101–1410.

The Consolidated Rail Corporation seeks approval of the proposed modification of the automatic block signal system, on the two main tracks, between Scioto Interlocking, milepost 132.1 and Bannon Interlocking, milepost 137.6, near Columbus, Ohio, Western Branch, Indianapolis Division; consisting of the discontinuance and removal of automatic signals 1321, 1332, 1351, 1352, 1361, and 1362, and the relocation of automatic signals 1341 and 1342, 350 feet north of milepost 135.

The reason given for the proposed changes is to retire facilities no longer required for present operation and improve braking distance.

Any interested party desiring to protest the granting of an application shall set forth specifically the grounds upon which the protest is made, and contain a concise statement of the interest of the protestant in the proceeding. The original and two copies of the protest shall be filed with the Associate Administrator for Safety, FRA, 400 Seventh Street, S.W., Washington, D.C. 20590 within 45 calendar days of the date of issuance of this notice. Additionally, one copy of the protest shall be furnished to the applicant at the address listed above.

FRA expects to be able to determine these matters without oral hearing. However, if a specific request for an oral hearing is accompanied by a showing that the party is unable to adequately present his or her position by written statements, an application may be set for public hearing.

Issued in Washington, D.C. on March 8, 1995.

Phil Olekszyk,

Acting Deputy Associate Administrator for Safety Compliance and Program Implementation.

[FR Doc. 95–6223 Filed 3–13–95; 8:45 am]

BILLING CODE 4910–06–P

National Highway Traffic Safety Administration

[Docket No. EA92–041; Notice 4]

General Motors Pickup Truck Defect Investigation

AGENCY: National Highway Traffic Safety Administration (NHTSA), DOT

ACTION: Notice of closing of investigation.

SUMMARY: The purpose of this Notice is to announce that Engineering Analysis (EA) 92–041 has been closed in accordance with the settlement agreement between the United States Department of Transportation and General Motors Corporation, dated March 7, 1995 (Attachment A). Secretary of Transportation Federico Peña announced the parties' initial agreement to settle the matter and explained the basis for this Departmental decision in a statement issued December 2, 1994, which is available as an attachment to the March 9, 1995 memorandum to the public file for EA92–041 announcing the closing of that investigation. For procedural reasons, the October 17, 1994 initial decision that the C/K pickup trucks subject to EA92–041 contain a defect related to motor vehicle safety is vacated.

FOR FURTHER INFORMATION CONTACT: Ellen Berlin, Director, Office of Public and Consumer Affairs, NHTSA, 400 Seventh Street, SW., Washington, DC 20590; (202) 366–9550.

Authority: 49 U.S.C. 30118; delegations of authority at 49 CFR 1.50(a) and 501.8(g).

Issued on: March 9, 1995.

William A. Boehly,

Associate Administrator for Safety Assurance.

Attachment A—Settlement Agreement Between the United States Department of Transportation and General Motors Corporation

March 7, 1995.

Settlement Agreement

Whereas, the National Highway Traffic Safety Administration (NHTSA), an agency of the United States Department of Transportation (DOT), conducted an investigation (EA92–041) into an alleged defect related to motor vehicle safety of model year 1970–1991 full-sized General Motors Corporation (GM) pickup trucks and cab-chassis equipped with fuel tanks mounted outboard of the frame rails (C/K pickup trucks); and

Whereas, on October 17, 1994, Secretary of Transportation Federico Peña announced his initial decision that the C/K pickup trucks contain a defect related to motor vehicle safety; and

Whereas, no final decision had been made by the Secretary of Transportation as to whether the C/K pickup trucks contain a defect related to motor vehicle safety; and

Whereas, DOT and GM each determined that the settlement of the above-referenced investigation, as memorialized in a letter agreement dated December 2, 1994, is in the public interest and best furthers their mutual interest in motor vehicle safety; and

Whereas, DOT and GM agree that this settlement will avoid time-consuming, costly litigation of a complex matter that raises difficult factual and legal issues; and instead offers an opportunity for meaningful cooperation between government and industry to significantly enhance the safety of the driving public;

Now therefore, the Department of Transportation and General Motors Corporation hereby agree to the following settlement of this matter:

I. Terms and Conditions

A. Enhance Federal Motor Vehicle Safety Standard (FMVSS) No. 301

1. GM and DOT will support enhancement of the current standard regarding fuel system integrity, FMVSS 301, through a public rulemaking process.

a. GM will support the development by DOT, on an expedited basis, of a revised standard that best simulates the real-world crash conditions that result in post-crash fires.

b. GM agrees that the current FMVSS 301 standard should be enhanced to meet today's high pressure fuel system designs and in today's traffic environment to provide higher levels of occupant protection from post-crash fires.

c. It is envisioned that the revised standard would employ a more representative impacting device than the current standard, would involve higher test speeds (approximately 40 m.p.h.) than the current standard, and would include separate tests of the integrity of fuel system components in addition to full vehicle tests at different impact locations.

2. GM agrees that its support will take the following form:

a. GM will, to the extent legally permissible, take an active part in the rulemaking process.

b. GM will undertake and/or finance research, including research described in the other provisions of this agreement, which will further the development of an enhanced standard.

c. GM will submit to NHTSA's rulemaking docket all research undertaken or financed in accordance with the other provisions of this agreement that support the development of an enhanced standard.

3. GM and DOT will work together to improve other Federal motor vehicle safety standards.

4. None of the provisions in this section A. shall operate to give GM

rights it does not otherwise have under the Administrative Procedure Act or under any other provision of law, nor deny or abridge such rights to any other person.

B. Fire Safety Research

1. GM will finance motor vehicle fire safety research, or otherwise contract to conduct such research. GM agrees to expend at least $5,000,000 within the two-year period following the effective date of this agreement for this activity. GM will expend at least an additional $5,000,000 during the subsequent three years for this activity unless both NHTSA and GM agree that this activity should no longer be funded. Research to be conducted shall include, among other possible projects: (i) Detailed accident analysis and development of new vehicle crash and component level testing procedures; (ii) testing of materials that would reduce the risk of fire; and (iii) development of techniques for preventing, containing and extinguishing vehicle fires. The research projects shall be undertaken in accordance with paragraph B.2., below.

2. Within 30 days of the effective date of this agreement, GM and NHTSA representatives will meet, at which time GM will provide NHTSA with a proposal identifying the facilities to be used and the research projects to be undertaken during the initial two-year period of activity. The NHTSA representatives will promptly review GM's proposal and provide recommendations and comments on it. The NHTSA and GM representatives will continue to meet and confer as is necessary to reach agreement on the research projects. Thereafter, the NHTSA and GM representatives will meet periodically to review the status and progress of the projects and to consider any proposed modifications to those projects.

3. Six months prior to the end of the initial two-year period of activity, GM will submit to NHTSA a description of the projects proposed to be funded during the subsequent three-year period. The parties shall then follow the procedures set forth in paragraph B. 2, above, in reaching agreement as to the projects for the subsequent period and in monitoring such projects.

4. GM will provide NHTSA with such reports as may reasonably be required by NHTSA to inform NHTSA of the status, progress, and results of fire safety research projects conducted under this agreement.

5. All research undertaken pursuant to this provision shall be submitted to NHTSA and shall be made publicly available. Neither GM nor any of its contractors or grantees shall be entitled to receive or retain any proprietary interest in such research.

6. DOT will provide, in its discretion and consistent with applicable law, available resources to support this project. Such resources may include, but are not limited to, project reviews, research on post-crash fire prevention, research related to the FMVSS No. 301 rulemaking, public information, and other similar activities.

C. Public Education

1. GM agrees to expend at least $11,855,000 within the five-year period following the effective date of this agreement in the areas of public education, as generally described herein. GM will expend approximately one-fifth of this amount each year over the five-year period. GM, with NHTSA's concurrence, may alter the rate of spending if doing so would further the goals of this section.

2. Funds shall be spent in the following areas: (i) Support for enactment, upgrading and/or retention of state legislation for the enhancement of driver and vehicle safety including, for example, administrative license revocation laws and blood alcohol content laws (e.g., .08 BAC laws, zero tolerance laws for youth), and for the primary enforcement of seat belt laws; (ii) public information and education materials (including public service announcements) on driver and vehicle safety (e.g., anti-drinking and driving messages, encouragement of seat belt usage), particularly in support of legislative and/or enforcement campaigns and/or to publicize new or existing laws, and development and distribution of special safety awareness materials for targeted hard-to-reach populations; and (iii) support of the Network of Employers for Traffic Safety (NETS) program and the Techniques for Effective Alcohol Management (TEAM) program.

3. All public information and education materials prepared by, or under contract to, GM shall be submitted to NHTSA for its comments and recommendations prior to their issuance. GM will provide NHTSA with a copy of all such finalized materials.

4. Within 30 days of the effective date of this agreement, GM and NHTSA representatives will meet, at which time GM will provide NHTSA with a proposal for the projects and activities to be undertaken by GM during the first year for purposes of satisfying the requirements of this section. The NHTSA representatives will promptly review GM's proposal and provide recommendations and comments on it. The NHTSA and GM representatives will continue to meet and confer as is necessary to reach agreement on the projects or activities to be undertaken or financed. Thereafter, the NHTSA and GM representatives will meet periodically to review the status and progress of such projects or activities and to consider any proposed modifications to them.

5. Sixty days prior to the end of the first year period of activity, and thereafter on an annual basis or on such other basis as GM and NHTSA mutually shall determine, GM shall submit to NHTSA a description of the projects and activities to be undertaken during the following year or other agreed-upon time period. The parties shall then follow the procedures set forth in paragraph C.4 above in reaching agreement as to the projects and activities for the subsequent period and in monitoring such projects and activities.

6. GM will provide NHTSA with such reports as may reasonably be required by NHTSA to inform NHTSA of the status, progress, and results of the projects or activities conducted pursuant to this section.

7. GM's commitment to expend these funds is dependent upon DOT's direct or indirect support, through expenditures, grants to states and/or other third parties, or otherwise, for public education programs and activities at approximately equivalent levels. If DOT does not provide such support, GM and DOT will use their best efforts to discuss, in good faith, whether and how to redirect GM's commitment of expenditures to other alternative programs furthering motor vehicle safety to which DOT is committing funds at equivalent levels.

D. Crash Test Dummy Research and Development

1. GM agrees to expend at least $6,500,000 within the five-year period following the effective date of this agreement in the area of research into and development of crash test dummies. GM will expend approximately one-fifth of this amount each year of the five-year period. GM, with NHTSA's concurrence, may alter the rate of spending if doing so would further the goals of this section.

2. Within 30 days of the effective date of this agreement, GM and NHTSA representatives will meet, at which time GM will provide NHTSA with a proposal describing the projects and activities to be undertaken by GM during the first year for purposes of satisfying the requirements of this section. The NHTSA representatives

will promptly review GM's proposal and provide recommendations and comments on it. The NHTSA and GM representatives will continue to meet and confer as is necessary to reach agreement on the projects or activities to be undertaken. Thereafter, the NHTSA and GM representatives will meet periodically to review the status and progress of the projects or activities and to consider any proposed modifications to those projects.

3. Sixty days prior to the end of the first year period of activity, and thereafter on an annual basis or on such other basis as GM and NHTSA mutually shall determine, GM shall submit to NHTSA a description of the projects and activities to be undertaken during the following year or other agreed-upon time period. The parties shall then follow the procedures set forth in paragraph D.2 above in reaching agreement as to the projects and activities for the subsequent period and in monitoring such projects and activities.

4. GM will provide NHTSA with such reports as may reasonably be required by NHTSA to inform NHTSA of the status, progress, and results of crash dummy research and development projects conducted pursuant to this agreement.

5. All research undertaken pursuant to this provision shall be submitted to NHTSA and shall be made publicly available. Neither GM nor any of its contractors or grantees shall be entitled to receive or retain any proprietary interest in such research.

6. GM's commitment to expend these funds is dependent upon DOT supporting crash dummy research at approximately equivalent levels. Such support may include, but is not limited to grants and contracts, as well as direct and indirect expenditures, for biomechanical testing, analytical modeling, dummy component development, and accident data analyses. If DOT does not provide such support, GM and DOT will use their best efforts to discuss, in good faith, whether and how to redirect GM's commitment to other alternative programs furthering motor vehicle safety to which DOT is committing funds at equivalent levels.

E. Burn & Trauma Research

1. GM agrees to expend at least $5,000,000 within the five-year period following the effective date of this agreement to further research relating to the causes and treatment of burns and trauma. GM shall accomplish this task by means of donations and/or grants to one or more institutions with experience in burn and/or trauma research. Institutions selected as recipients of these funds shall use the funds for specific research projects designed to advance medical science's understanding and treatment of burn or trauma injuries, particularly those arising out of motor vehicle accidents. GM will donate approximately $1,000,000 each year over the five-year period to agreed-upon projects. GM, with NHTSA's concurrence, may alter the rate of spending if doing so would further the goals of this section.

2. Within 60 days of the effective date of this agreement, GM and NHTSA representatives will meet, at which time GM will provide NHTSA with a proposal identifying the institutions to be selected and the projects to be undertaken during the first year for purposes of satisfying the requirements of this section. The NHTSA representatives will promptly review GM's proposal and provide recommendations and comments on it. The NHTSA and GM representatives will continue to meet and confer as is necessary to reach agreement on the institutions to be selected and the projects to be undertaken. Thereafter, the NHTSA and GM representatives will meet periodically to review the status and progress of the projects and to consider any proposed modifications to those projects.

3. Sixty days prior to the end of the first year period of activity, and thereafter on an annual basis or on such other basis as GM and NHTSA mutually shall determine, GM shall submit to NHTSA a description of the projects and activities to be undertaken during the following year or other agreed-upon time period. The parties shall then follow the procedures set forth in paragraph E.2 above in reaching agreement as to the projects for the subsequent period and in monitoring such projects.

4. The terms of any donation or grant shall require appropriate recordkeeping and reporting obligations, including progress reports, by the recipient institutions sufficient to assure NHTSA and GM that the funds are being prudently spent for their intended purposes, and that the objectives of the research program are being realized.

5. GM shall notify NHTSA of each donation or grant made by it and shall provide NHTSA with an annual summary of its donations under this provision of the agreement.

6. All research undertaken pursuant to this provision shall be submitted to NHTSA and shall be made publicly available. Neither GM nor any of its grantees shall be entitled to receive or retain any proprietary interest in such research.

F. Computer Modeling

1. GM agrees to expend $2,000,000 within the first year following the effective date of this agreement in the area of computer-based design modeling of accident-related injuries arising from fire, trauma, and exposure to toxic substances. GM agrees to expend an additional $3,000,000 for these purposes over the subsequent three-year period. The parties expect that this activity will assist in the development of more effective crash test dummies.

2. Within 30 days of the effective date of this agreement, GM and NHTSA representatives will meet, at which time GM will provide NHTSA with a proposal describing the projects and activities to be undertaken by GM during the initial one-year period of activity for purposes of satisfying the requirements of this section. The NHTSA representatives will promptly review GM's proposal and provide recommendations and comments on it. The NHTSA and GM representatives will continue to meet and confer as is necessary to reach agreement on the projects or activities to be undertaken. Thereafter, the NHTSA and GM representatives will meet periodically to review the status and progress of the projects or activities and to consider any proposed modifications to those projects or activities.

3. Three months prior to the end of the initial one-year period of activity, GM will submit to NHTSA a description of the projects and activities proposed to be funded during the subsequent three-year period. The parties shall then follow the procedures set forth in paragraph F.2, above, in reaching agreement as to the projects or activities for the subsequent period and in monitoring such projects or activities.

4. GM will provide NHTSA with such progress reports as may reasonably be required by NHTSA to inform NHTSA of the status, progress, and results of such computer-based design modeling projects conducted under this agreement.

5. All research undertaken pursuant to this provision shall be submitted to NHTSA and shall be made publicly available. Neither GM nor any of its contractors or grantees shall be entitled to receive or retain any proprietary interest in such research.

6. GM's commitment to expend the $3,000,000 for the latter three-year period is dependent on DOT, in good faith, supporting these or similar activities during the latter three-year period. DOT support may take the form

of, but is not limited to, grants and contracts, as well as direct and indirect expenditures, for computer modeling for side impact and frontal impact dummies. If DOT does not provide such support, GM and DOT will use their best efforts to discuss, in good faith, whether and how to redirect GM's commitment to other alternative programs furthering motor vehicle safety to which DOT is committing funds at equivalent levels.

G. Impairment Research

1. GM agrees to expend at least $5,000,000 within the five-year period following the effective date of this agreement for research into the areas of driver impairment, including but not limited to (i) the effects of aging, (ii) the effects of alcohol, and (iii) the effects of the use of prescription and other lawful drugs. GM will expend approximately one-fifth of this amount each year of the five-year period. GM, with NHTSA's concurrence, may alter the rate of spending if doing so would further the goals of this section.

2. Within 30 days of the effective date of this agreement, GM and NHTSA representatives will meet, at which time GM will provide NHTSA with a proposal describing the projects and activities to be undertaken by GM during the first year for purposes of satisfying the requirements of this section. The NHTSA representatives will promptly review GM's proposal and provide recommendations and comments on it. The NHTSA and GM representatives will continue to meet and confer as is necessary to reach agreement on the projects or activities to be undertaken. Thereafter, the NHTSA and GM representatives will meet periodically to review the status and progress of the projects or activities and to consider any proposed modifications to those projects or activities.

3. Sixty days prior to the end of the first year period of activity, and thereafter on an annual basis or on such other basis as GM and NHTSA mutually shall determine, GM shall submit to NHTSA a description of the projects and activities to be undertaken during the following year or other agreed-upon time period. The parties shall then follow the procedures set forth in paragraph G.2 above in reaching agreement as to the projects or activities for the subsequent period and in monitoring such projects or activities.

4. GM will provide NHTSA with such reports as may reasonably be required by NHTSA to inform NHTSA of the status, progress, and results of driver impairment research projects conducted under this agreement.

5. All research undertaken pursuant to this provision shall be submitted to NHTSA and shall be made publicly available. Neither GM nor any of its contractors or grantees shall be entitled to receive or retain any proprietary interest in such research.

6. GM's commitment to expend these funds is dependent upon DOT supporting driver impairment research at approximately equivalent levels. Such support may include, but is not limited to, grants and contracts, as well as direct and indirect expenditures, for research, and other activities which further the development of facilities, tools or other means to support such research. If DOT does not provide such support, GM and DOT will use their best efforts to discuss, in good faith, whether and how to redirect GM's commitment to other alternative programs furthering motor vehicle safety to which DOT is committing funds at equivalent levels.

H. Child Safety Seats

1. GM agrees to donate to one or more qualified organizations at least $4,000,000 for the purchase and distribution of child safety seats during the first year following the effective date of this settlement agreement. GM shall donate such funds in the approximate amount of $1,000,000 during each quarter of that year. GM also agrees to donate at least $4,000,000 within the subsequent four years to one or more qualified organizations for the purchase and distribution of additional child safety seats.

2. DOT shall identify, on an ongoing basis so as to facilitate timely GM donations, qualified organizations which DOT in its sole discretion deems appropriate to receive donations from GM for the purchase and distribution of child safety seats. GM, in its sole discretion, shall select from the list of qualified organizations provided by DOT, the organization(s) to which it will donate funds, and shall decide the exact amount of funds that each such organization will receive.

3. In order to be identified by DOT as a qualified organization, an organization shall certify to DOT in writing that it shall: (i) Work, through its state or local affiliates, with agencies such as children's hospitals and health agencies to identify families who could not otherwise afford seats or who have special needs; (ii) have an existing loaner or give-away child safety seat program or have staff trained in child passenger safety issues; (iii) distribute the seats to low-income families and/or families with special needs across a broad geographical area throughout the United States; (iv) comply with NHTSA guidelines with respect to the approximate mix of child safety seats (e.g., infant, toddler, booster, special needs); (v) distribute all of the seats purchased with the funds provided by GM to the local agencies within 120 days of the receipt of the funds; (vi) educate recipients of the seats as to methods of proper installation and use; (vii) not use more than 10 percent of the funds provided by GM for administrative expenses related to distribution of the seats; (viii) add the GM-provided funds to the total of its existing funds spent on the distribution of child safety seats to low-income families and not divert any funds currently budgeted to such activities to other activities; (ix) allow the activities conducted pursuant to this provision to be audited by such third party as selected by DOT; (x) acknowledge and agree that such commitments and promises shall be enforceable; and (xi) acknowledge and agree that GM does not assume or bear any responsibility for the organization's commitments, the selection of the safety seats actually purchased or distributed, or the education of recipients of the seats as to proper use.

4. GM's commitment to donate the second $4,000,000 of funds during the subsequent four-year period is dependent upon DOT's expenditure of funds for the development and support of child safety seat loaner and give-away programs during that period. If DOT makes such expenditures, GM shall donate funds in accordance with this section at equivalent levels as DOT until such time as GM's total $8,000,000 commitment is fulfilled. If DOT does not make such expenditures, DOT and GM will use their best efforts to discuss, in good faith, whether and how to redirect GM's commitment to other alternative programs furthering motor vehicle safety to which DOT is committing funds at equivalent levels. Costs and expenses attributable to DOT's efforts in identifying qualified organizations shall not count as part of DOT's expenditure of funds for purposes of this section.

I. Dismissal of Lawsuit

Within five days after the execution of this final settlement agreement, GM will dismiss *General Motors Corporation* v. *Peña*, C.A. No. 94–75668 E.D. Mich. (filed Nov. 17, 1994) by filing a notice of dismissal in the form attached as Exhibit A.

J. Pending Investigation

1. Within five days after the execution of this final settlement agreement, DOT

will close its investigation into whether the GM C/K pickup trucks contain a defect related to motor vehicle safety (EA 92–041). DOT will not, in connection with that investigation, seek to have GM, either voluntarily or involuntarily, recall or take other field action with respect to the C/K pickup trucks.

2. The initial decision of October 17, 1994, was not a final decision or final finding of a defect and was subject to further review by DOT. DOT will not reach a final decision in this matter as to whether the GM C/K pickup trucks contain a defect related to motor vehicle safety. For procedural reasons, the initial decision will be vacated within five days after the execution of this final settlement agreement. Within five days after the execution of this agreement, DOT will publish in the **Federal Register** and place in the public file for EA92–041 a closing memo indicating DOT's reasons for entering into this agreement and containing notice of vacation of DOT's initial decision in the matter.

II. Reporting and Recordkeeping

A. GM will certify its compliance with the terms and conditions of this settlement agreement (including without limitation the requirement that all expenditures shall be ''new'' as defined in section III.E below), shall maintain such records as are necessary to demonstrate its compliance, and shall make such records available as may be reasonably required by DOT.

B. In addition to the requirements contained in the above provisions, GM will provide annual reports to NHTSA within 30 days following the end of each one- year period after the effective date of this agreement, until the terms of the agreement are satisfied, describing how GM is meeting its commitments and obligations under this agreement. Each annual report shall contain information relating to the nature and levels of expenditures for all projects undertaken pursuant to this settlement agreement, including the methodology for computing the value of GM's contributions.

C. Upon request, DOT will make available to GM information to confirm that DOT has provided support to certain projects as specified in Part I of this settlement agreement.

III. General Provisions

A. This agreement contains the entire agreement between the parties regarding the subject matter. There are no promises, agreements, conditions, undertakings, warranties or representations oral or written, express or implied, between them relating to this subject matter, other than as herein set forth. This agreement is intended by the parties to be an integration of all prior or contemporaneous promises, agreements, conditions, negotiations and undertakings between them.

B. This agreement may not be modified or amended except by an agreement in writing, signed by the parties.

C. This settlement agreement, and any amendments or modifications thereto, shall conform to and be carried out in accordance with all applicable laws and regulations. GM and DOT shall work in good faith to ensure that any amendments or modifications reflect consistency with these principles. If any portion of this agreement or any amendment or modification is not consistent with applicable laws and regulations, that portion shall be severable and the parties shall work in good faith to restructure that portion of the agreement consistent with the parties' original intent. The remainder of this agreement and any amendment or modification shall continue to be binding on the parties.

D. The headings in the agreement are for convenience only, and shall not limit or otherwise affect or describe the scope or intent of any of the terms hereof or of any particular section thereof. Any references to ''NHTSA'' in this agreement shall mean the National Highway Traffic Safety Administration or its successor(s).

E. GM's financial obligations hereunder shall represent, in all instances, new expenditures not heretofore provided for in any approved GM budget or otherwise planned (prior to the execution of the parties' December 2, 1994 letter agreement) to be undertaken by GM during the period of this settlement agreement. Annually repeated expenditures, e.g., annual contributions to charities or lobbying organizations, made or committed to by GM prior to the execution of the parties' December 2, 1994, letter agreement, shall not count as new expenditures except those portions, if any, of such expenditures that are over and above such annually repeated expenditure amounts.

F. Research reports submitted to NHTSA by or on behalf of GM and made publicly available pursuant to this agreement may, consistent with applicable law, identify GM as a source or sponsor of the report by stating that the report was financed, produced, or prepared, as applicable, ''by GM pursuant to an agreement between GM and the U.S. Department of Transportation.'' Public education materials produced or distributed by a third party (e.g., lobbying organization, AD Council, state or local government agency) pursuant to this agreement shall, absent legal prohibition to the contrary, contain a source identification which identifies such third party as the source of the materials in question. Public education materials produced and distributed directly by GM pursuant to this agreement may contain a source identification, assuming no other appropriate third party source exists, which states discretely, ''Brought to you, produced, or sponsored by the U.S. Department of Transportation and General Motors Corporation pursuant to an agreement between the parties.''

G. For the projects and activities encompassed by this agreement, GM's expenditures may be made, where appropriate, in the form of a combination of money, facilities, human resources, salaries, and other things directly related to the performance of such projects and activities and valued according to generally accepted accounting principles. However, GM's expenditures may not include general and administrative expenses attributable to GM corporate activities not directly related to the projects and activities conducted under this agreement; nor may GM's expenditures include indirect costs, such as depreciation of facilities and equipment, amortization of intangible rights, and insurance of all types, not directly related to the projects and activities conducted under this agreement. Furthermore, costs and expenses attributed to the development of GM's proposals pursuant to paragraphs B.2, B.3, C.4, C.5, D.2, D.3, E.2, E.3, F.2, F.3, G.2, and G.3 of Part I of this settlement agreement shall not be used by GM to fulfill its financial commitments.

H. This settlement agreement reflects the parties' desire to fully and completely settle the current investigation by DOT into an alleged defect of 1970–91 full-sized GM pickup trucks. Nonetheless, DOT reserves the right at any time, based on new information, to open a new defect investigation with respect to whether the GM C/K pickup trucks contain defect(s) related to motor vehicle safety. Nothing in this agreement shall nullify any obligation the Secretary may have under law to consider new evidence that was not part of the administrative record in this case. If a subsequent defect investigation involving the same alleged safety defect in the C/K trucks is opened, any unfulfilled commitments by GM under this agreement shall become null and void and GM shall not be deemed to have waived, by reason of

the execution of this agreement, any defense to or argument against any action by NHTSA, DOT or the Secretary.

I. The provisions regarding the redirection of funds, which appear in paragraphs C.7, D.6, F.6, G.6, and H.4 of Part I of this agreement, are intended by GM and DOT to require both parties to act in good faith to consider alternative programs of mutual interest in motor vehicle safety to which the funds may be redirected and to reflect a strong presumption that the funds in question will be redirected to such alternative programs.

J. In attempting to reach agreement on the projects or activities to be undertaken or financed by GM pursuant to sections C, D, F, and G of Part I of this agreement, the parties shall meet and confer in the utmost good faith and NHTSA shall not unreasonably withhold its agreement to a GM proposal that falls within the applicable description of activities and otherwise reasonably furthers the goals of the section in question.

K. All questions with respect to the construction of this agreement and the rights and liabilities of the parties shall be determined in accordance with the laws of the United States.

L. GM and DOT agree that this settlement agreement shall constitute a binding and enforceable contractual agreement upon GM and DOT and any successor corporations or agencies. In the event of a breach of this agreement, either party may institute a civil action in the United States District Court for the District of Columbia to enforce the terms of this agreement or to seek other appropriate relief.

M. By entering into this settlement agreement, neither GM nor DOT concedes the validity of each other's claims or defenses, and nothing in this settlement agreement shall constitute an admission by either party concerning its claims or defenses.

N. This settlement agreement is entered into solely for the purposes of settling the matters described herein and shall not confer any rights or benefits upon persons who are not parties to this agreement.

IV. Effective Date

The effective date of this agreement shall be March 7, 1995.

Agreed to by:

Dated: March 6, 1995.

John F. Smith,

Chief Executive Officer and President, General Motors Corporation.

Dated: March 7, 1995.

Federico Peña,

Secretary, Department of Transportation.

BILLING CODE 4910–59–P

EXHIBIT A

IN THE UNITED STATES DISTRICT COURT
FOR THE EASTERN DISTRICT OF MICHIGAN

GENERAL MOTORS CORPORATION, Plaintiff, v. FEDERICO PEÑA, Secretary of Transportation, UNITED STATES DEPARTMENT OF TRANSPORTATION and NATIONAL HIGHWAY TRAFFIC SAFETY ADMINISTRATION, Defendants.	)	Civ. Action No. 94 CV 74668

NOTICE OF DISMISSAL

Plaintiff, by its undersigned counsel, hereby dismisses this action pursuant to Fed. R. Civ. P. 41(a)(1).

Respectfully submitted,

_____
Jeffrey A. Rosen
John G. Mullan
James F. Basile
KIRKLAND & ELLIS
655 Fifteenth Street, N.W.
12th Floor
Washington, D.C. 20005
Telephone: (202) 879-5000

Eugene Driker
BARRIS, SOTT, DENN & DRIKER
211 West Fort Street
15th Floor
Detroit, MI 48227-3281
Telephone: (313) 965-9725

Counsel for Plaintiff
GENERAL MOTORS CORPORATION

Of Counsel:
Thomas A. Gottschalk
James A. Durkin
GENERAL MOTORS CORPORATION
New Center One Building
3031 West Grand Boulevard
Detroit, MI 48202

Erika Z. Jones
MAYER, BROWN & PLATT
2000 Pennsylvania Avenue
Washington, D.C. 20006

Dated:

[FR Doc. 95–6138 Filed 3–10–95; 8:45 am]
BILLING CODE 4910–59–p

[Docket No. 95–15; Notice 1]

Receipt of Petition for Decision That Nonconforming 1985 Suzuki GS850 Motorcycles Are Eligible for Importation

AGENCY: National Highway Traffic Safety Administration, DOT.

ACTION: Notice of receipt of petition for decision that nonconforming 1985 Suzuki GS850 motorcycles are eligible for importation.

SUMMARY: This notice announces receipt by the National Highway Traffic Safety Administration (NHTSA) of a petition for a decision that a 1985 Suzuki GS850 that was not originally manufactured to comply with all applicable Federal motor vehicle safety standards is eligible for importation into the United States because it has safety features that comply with, or are capable of being altered to comply with, all such standards.

DATES: The closing date for comments on the petition is on April 13, 1995.

ADDRESSES: Comments should refer to the docket number and notice number, and be submitted to: Docket Section, Room 5109, National Highway Traffic Safety Administration, 400 Seventh St., SW, Washington, DC 20590. [Docket hours are from 9:30 am to 4 pm].

FOR FURTHER INFORMATION CONTACT: Ted Bayler, Office of Vehicle Safety Compliance, NHTSA (202–366–5306).

SUPPLEMENTARY INFORMATION:

Background

Under 49 U.S.C. 30141(a)(1)(A) (formerly section 108(c)(3)(A)(i)(I) of the National Traffic and Motor Vehicle Safety Act (the Act)), a motor vehicle that was not originally manufactured to conform to all applicable Federal motor vehicle safety standards shall be refused admission into the United Sates unless NHTSA has decided that the motor vehicle is substantially similar to a motor vehicle originally manufactured for importation into and sale in the United States, certified under 49 U.S.C. 30115 (formerly section 114 of the Act), and of the same model year as the model of the motor vehicle to be compared, and is capable of being readily altered to conform to all applicable Federal motor vehicle safety standards. Where there is no substantially similar U.S.-certified motor vehicle, 49 U.S.C. 30141(a)(1)(B) (formerly section 108(c)(3)(A)(i)(II) of the Act, 15 U.S.C. 1397(c)(3)(A)(i)(II)) permits a nonconforming motor vehicle to be admitted into the United States if its safety features comply with, or are capable of being altered to comply with, all applicable Federal motor vehicle safety standards based on destructive test data or such other evidence as NHTSA decides to be adequate.

Petitions for eligibility decisions may be submitted by either manufacturers or importers who have registered with NHTSA pursuant to 49 CFR Part 592. As specified in 49 CFR 593.7, NHTSA publishes notice in the **Federal Register** of each petition that it receives, and affords interested persons an opportunity to comment on the petition. At the close of the comment period, NHTSA decides, on the basis of the petition and any comments that it has received, whether the vehicle is eligible for importation. The agency then publishes this decision in the **Federal Register**.

G&K Automotive Conversion, Inc. of Santa Ana, California (Registered Importer No, R–90–007) has petitioned NHTSA to decide whether 1985 Suzuki GS850 motorcycles are eligible for importation into the United States. The petitioner contends that this vehicle is eligible for importation under 49 U.S.C. 30141(a)(1)(B) because it has safety features that comply with, or are capable of being altered to comply with, all applicable Federal motor vehicle safety standards.

Specifically, the petitioner claims that the 1985 Suzuki GS850 has safety features that comply with Standards Nos. 106 *Brake Hoses,* 116 *Brake Fluids,* 119 *New Pneumatic Tires for Vehicles other than Passenger Cars,* and 122 *Motorcycle Brake Systems.*

The petitioner further contends that the vehicle is capable of being readily altered to meet the following standards, in the manner indicated:

Standard No. 108 *Lamps, Reflective Devices, and Associated Equipment:* (a) Installation of headlamps with DOT markings; (b) installation of stoplamp and taillamp lenses with DOT markings; (c) installation of turn signal lamps and lenses with DOT markings; (d) installation of amber front and red rear reflectors with DOT markings; (e) installation of a white license plate lamp and lens with DOT markings; (f) rewiring of the ignition switch so that the headlamp and taillamp are illuminated when the ignition is turned on.

Standard No. 111 *Rearview Mirrors:* Installation of rearview mirrors with DOT markings.

Standard No. 115 *Vehicle Identification Number:* Installation of a VIN plate and VIN reference label on the vehicle.

Standard No. 120 *Tire Selection and Rims for Motor Vehicles other than Passenger Cars:* Installation of a tire information placard.

Standard No. 123 *Motorcycle Controls and Displays:* (a) Installation of an illuminated speedometer, calibrated in miles per hour; (b) installation of approve symbols on controls for supplemental engine stop, turn signal, headlamp, and horn.

Standard No. 205 *Glazing Materials:* Installation of a windscreen with DOT markings.

Interested persons are invited to submit comments on the petition described above. Comments should refer to the docket number and be submitted to: Docket Section, National Highway Traffic Safety Administration, Room 5109, 400 Seventh Street, SW, Washington, DC 20590. It is requested but not required that 10 copies be submitted.

All comments received before the close of business on the closing date indicated above will be considered, and will be available for examination in the docket at the above address both before and after that date. To the extent possible, comments filed after the closing date will also be considered. Notice of final action on the petition will be published in the **Federal Register** pursuant to the authority indicated below.

Authority: 49 U.S.C. 30141 (a)(1)(B) and (b)(1); 49 CFR 593.8; delegations of authority at 49 CFR 1.50 and 501.8.

Issued on March 8, 1995.

Harry Thompson,

Acting Director, Office of Vehicle Safety Compliance.

[FR Doc. 95–6147 Filed 3–13–95; 8:45 am]

BILLING CODE 4910–59–M

[Docket No. 95–14; Notice 1]

Receipt of Petition for Decision That Nonconforming 1973 Lancia Fulvia 1.3 S 2-Door Coupes Are Eligible for Importation

AGENCY: National Highway Traffic Safety Administration, DOT.

ACTION: Notice of receipt of petition for decision that nonconforming 1973 Lancia Fulvia 1.3 S 2-Door Coupe passenger cars are eligible for importation.

SUMMARY: This notice announces receipt by the National Highway Traffic Safety Administration (NHTSA) of a petition for a decision that a 1973 Lancia Fulvia 1.3 S 2-Door Coupe that was not originally manufactured to comply with all applicable Federal motor vehicle safety standards is eligible for importation into the United States

because it has safety features that comply with, or are capable of being altered to comply with, all such standards.

DATES: The closing date for comments on the petition is on April 13, 1995.

ADDRESSES: Comments should refer to the docket number and notice number, and be submitted to: Docket Section, Room 5109, National Highway Traffic Safety Administration, 400 Seventh St., SW, Washington, DC 20590. [Docket hours are from 9:30 am to 4 pm.]

FOR FURTHER INFORMATION CONTACT: Ted Bayler, Office of Vehicle Safety Compliance, NHTSA (202–366–5306).

SUPPLEMENTARY INFORMATION:

Background

Under 49 U.S.C. 30141(a)(1)(A) (formerly section 108(c)(3)(A)(i)(I) of the National Traffic and Motor Vehicle Safety Act (the Act)), a motor vehicle that was not originally manufactured to conform to all applicable Federal motor vehicle safety standards shall be refused admission into the United States unless NHTSA has decided that the motor vehicle is substantially similar to a motor vehicle originally manufactured for importation into and sale in the United States, certified under 49 U.S.C. 30115 (formerly section 114 of the Act), and of the same model year as the model of the motor vehicle to be compared, and is capable of being readily altered to conform to all applicable Federal motor vehicle safety standards. Where there is no substantially similar U.S.—certified motor vehicle, 49 U.S.C. 30141(a)(1)(B) (formerly section 108(c)(3)(A)(i)(II) of the Act, 15 U.S.C. 1397(c)(3)(A)(i)(II)) permits a nonconforming motor vehicle to be admitted into the United States if its safety features comply with, or are capable of being altered to comply with, all applicable Federal motor vehicle safety standards based on destructive test data or such other evidence as NHTSA decides to be adequate.

Petitions for eligibility decisions may be submitted by either manufacturers or importers who have registered with NHTSA pursuant to 49 CFR Part 592. As specified in 49 CFR 593.7, NHTSA publishes notice in the **Federal Register** of each petition that it receives, and affords interested persons an opportunity to comment on the petition. At the close of the comment period, NHTSA decides, on the basis of the petition and any comments that it has received, whether the vehicle is eligible for importation. The agency then publishes this decision in the **Federal Register**.

G&K Automotive Conversion, Inc. of Santa Ana, California (Registered Importer No. R–90–007) has petitioned NHTSA to decide whether 1973 Lancia Fulvia 1.3 S 2-Door Coupes are eligible for importation into the United States. The petitioner contends that this vehicle is eligible for importation under 49 U.S.C. § 30141(a)(1)(B) because it has safety features that comply with, or are capable of being altered to comply with, all applicable Federal motor vehicle safety standards.

Specifically, the petitioner claims that the 1973 Lancia Fulvia 1.3 S 2-Door Coupe has safety features that comply with Standards Nos. 102 *Transmission Shift Lever Sequence . . . .,* 103 *Defrosting and Defogging Systems,* 104 *Windhsield Wiping and Washing Systems,* 105 *Hydraulic Brake Systems,* 106 *Brakes Hoses,* 107 *Reflecting Surfaces,* 109 *New Pneumatic Tires,* 111 *Rearview Mirrors,* 113 *Hood Latch Systems,* 201 *Occupant Protection in Interior Impact,* 202 *Head Restraints,* 203 *Impact Protection for the Driver From the Steering Control System,* 204 *Steering Control Rearward Displacement,* 205 *Glazing Materials,* 206 *Door Locks and Door Retention Components,* 207 *Seating Systems,* 209 *Seat Belt Assemblies,* 210 *Seat Belt Assembly Anchorages,* 211 *Wheel Nuts, Wheel Discs and Hubcaps,* 212 *Windshield Retention,* 301 *Fuel System Integrity,* and 302 *Flammability of Interior Materials.*

The petitioner further contends that the vehicle is capable of being readily altered to meet the following standards, in the manner indicated:

Standard No. 101 *Controls and Displays:* (a) Substitution of a lens marked ''Brake'' for a lens with an ECE symbol on the brake failure indicator lamp; (b) placement of approved symbols on the controls for the lights, hazard warning flasher, windshield washer, and windshield wipers.

Standard No. 108 *Lamps, Reflective Devices, and Associated Equipment:* (a) Installation of sealed beam headlamps and front sidemarkers with a DOT marking; (b) installation of taillamp lenses and rear sidemarkers with a DOT marking.

Standards No. 110 *Tire Selection and Rims:* Installation of a tire information placard.

Standard No. 114 *Theft Protection:* Installation of a buzzer microswitch in the steering lock assembly, and a warning buzzer.

Standard No. 115 *Vehicle Identification Number:* Installation of a VIN plate that can be read from outside the left windshield pillar, and a VIN reference label on the edge of the door or latch post nearest the driver.

Standard No. 116 *Brake Fluids:* Installation of a label with required information near the brake fluid cap.

Standard No. 208 *Occupant Crash Protection:* Installation of a seat belt warning system and light.

Standard No. 214 *Side Impact Protection:* Installation of reinforcing beams.

Additionally, the petitioner claims that the bumpers on the 1973 Lancia Fulvia 1.3 S 2-Door Coupe must be reinforced to comply with the Bumper Standard found in 49 CFR Part 581.

Interested persons are invited to submit comments on the petition described above. Comments should refer to the docket number and be submitted to: Docket Section, National Highway Traffic Safety Administration, Room 5109, 400 Seventh Street, SW, Washington, DC 20590. It is requested but not required that 10 copies be submitted.

All comments received before the close of business on the closing date indicated above will be considered, and will be available for examination in the docket at the above address both before and after that date. To the extent possible, comments filed after the closing date will also be considered. Notice of final action on the petition will be published in the **Federal Register** pursuant to the authority indicated below.

Authority: 49 U.S.C. 30141 (a)(1)(B) and (b)(1); 49 CFR 593.8; delegations of authority at 49 CFR 1.50 and 501.8.

Issued on March 8, 1995.

Harry Thompson,

Acting Director, Office of Vehicle Safety Compliance.

[FR Doc. 95–6148 Filed 3–13–95; 8:45 am]

BILLING CODE 4910–59–M

[Docket No. 95–10; Notice 2]

Receipt of Petition for Decision That Nonconforming 1973 Dodge Colt 2-Door Coupe Passenger Cars Are Eligible for Importation

AGENCY: National Highway Traffic Safety Administration, DOT.

ACTION: Notice of receipt of petition for decision that nonconforming 1973 Dodge Colt 2-Door Coupe passenger cars are eligible for importation.

SUMMARY: This notice announces receipt by the National Highway Traffic Safety Administration (NHTSA) of a petition for a decision that a 1973 Dodge Colt 2-Door Coupe that was not originally manufactured to comply with all

applicable Federal motor vehicle safety standards is eligible for importation into the United States because (1) it is substantially similar to a vehicle that was originally manufactured for importation into and sale in the United States and that was certified by its manufacturer as complying with the safety standards, and (2) it is capable of being readily altered to conform to the standards.

DATES: The closing date for comments on the petition is on April 13, 1995.

ADDRESSES: Comments should refer to the docket number and notice number, and be submitted to: Docket Section, Room 5109, National Highway Traffic Safety Administration, 400 Seventh St., SW, Washington, DC 20590. [Docket hours from 9:30 a.m. to 4 p.m.]

FOR FURTHER INFORMATION CONTACT: Ted Bayler, Office of Vehicle Safety Compliance, NHTSA (202–366–5306).

SUPPLEMENTARY INFORMATION:

Background

Under 49 U.S.C. 30141(a)(1)(A) (formerly section 108(c)(A)(i)(I) of the National Traffic and Motor Vehicle Safety Act (the Act)), a motor vehicle that was not originally manufactured to conform to all applicable Federal motor vehicle safety standards shall be refused admission into the United States unless NHTSA has decided that the motor vehicle is substantially similar to a motor vehicle originally manufactured for importation into and sale in the United States, certified under 49 U.S.C. 30115 (formerly section 114 of the Act), and of the same model year as the model of the motor vehicle to be compared, and is capable of being readily altered to conform to all applicable Federal motor vehicle safety standards.

Petitions for eligibility decisions may be submitted by either manufacturers or importers who have registered with NHTSA pursuant to 49 CFR part 592. As specified in 49 CFR 593.7, NHTSA publishes notice in the **Federal Register** of each petition that it receives, and affords interested persons an opportunity to comment on the petition. At the close of the comment period, NHTSA decides, on the basis of the petition and any comments that it has received, whether the vehicle is eligible for importation. The agency then publishes this decision in the **Federal Register**.

G&K Automotive Conversion, Inc. of Santa Ana, California (''G&K'') (Registered Importer 90–007) has petitioned NHTSA to decide whether 1973 Dodge Colt 2-Door Coupe passenger cars are eligible for importation into the United States. The vehicle which G&K believes is substantially similar is the 1973 Dodge Colt 2-Door Coupe that was manufactured for importation into, and sale in, the United States and certified by its manufacturer, Mitsubishi Motors Corporation, as conforming to all applicable Federal motor vehicle safety standards.

The petitioner claims that it carefully compared the non-U.S. certified 1973 Dodge Colt 2-Door Coupe to its U.S. certified counterpart, and found the two vehicles to be substantially similar with respect to compliance with most Federal motor vehicle safety standards.

G&K submitted information with its petition intended to demonstrate that the non-U.S. certified 1973 Dodge Colt 2-Door Coupe, as originally manufactured, conforms to many Federal motor vehicle safety standards in the same manner as its U.S. certified counterpart, or is capable of being readily altered to conform to those standards.

Specifically, the petitioner claims that the non-U.S. certified 1973 Dodge Colt 2-Door Coupe is identical to its U.S. certified counterpart with respect to compliance with Standards Nos. 102 *Transmission Shift Lever Sequence* * * *., 103 *Defrosting and Defogging Systems,* 104 *Windshield Wiping and Washing Systems,* 105 *Hydraulic Brake Systems,* 106 *Brake Hoses,* 107 *Reflecting Surfaces,* 109 *New Pneumatic Tires,* 111 *Rearview Mirror,* 113 *Hood Latch Systems,* 201 *Occupant Protection in Interior Impact,* 202 *Head Restraints,* 203 *Impact Protection for the Driver From the Steering Control System,* 204 *Steering Control Rearward Displacement,* 205 *Glazing Materials,* 206 *Door Locks and Door Retention Components,* 207 *Seating Systems,* 209 *Seat Belt Assemblies,* 210 *Seat Belt Assembly Anchorages,* 211 *Wheel Nuts, Wheel Discs and Hubcaps,* 212 *Windshield Retention,* 301 *Fuel System Integrity,* and 302 *Flammability of Interior Materials.*

Petitioner also contends that the vehicle is capable of being readily altered to meet the following standards, in the manner indicated:

Standard No. 101 *Controls and Displays:* (a) Inscription of the word ''Brake'' on the brake failure indicator lamp lens; (b) placement of the required symbols on the controls for lights, hazard warning flasher, windshield washer, and windshield wipers.

Standard No. 108 *Lamps, Reflective Devices and Associated Equipment:* (a) Installation of U.S.-model sealed beam headlamps and front sidemarkers; (b) installation of U.S.-model taillamp lenses and rear sidemarkers.

Standard No. 110 *Tire Selection and Rims:* Installation of a tire information placard.

Standard No. 114 *Theft Protection:* Installation of a warning buzzer microswitch and a warning buzzer in the steering lock assembly.

Standard No. 115 *Vehicle Identification Number:* installation of a VIN plate that can be read from outside the left windshield pillar, and a VIN reference label on the edge of the door or latch post nearest the driver.

Standard No. 116 *Brake Fluid:* Placement of a label containing required information on or near the brake fluid cap.

Standard No. 208 *Occupant Crash Protection:* Installation of a seat belt warning light and buzzer.

Standard No. 214 *Side Impact Protection:* Installation of a seat belt warning light and buzzer.

Standard No. 214 *Side Impact Protection:* Installation of reinforcing beams.

Additionally, the petitioner states that the bumpers on the non-U.S. certified 1973 Dodge Colt 2-Door Coupe must be reinforced to comply with the Bumper Standard found in 49 CFR Part 581.

Interested persons are invited to submit comments on the petition described above. Comments should refer to the docket number and be submitted to: Docket Section, National Highway Traffic Safety Administration, Room 5109, 400 Seventh Street, S.W., Washington, DC 20590. It is requested but not required that 10 copies be submitted.

All comments received before the close of business on the closing date indicated above will be considered, and will be available for examination in the docket at the above address both before and after that date. To the extent possible, comments filed after the closing date will be considered. Notice of final action on the petition will be published in the **Federal Register** pursuant to the authority indicated below.

Authority: 49 U.S.C. 30141(a)(1)(A) and (b)(1); 49 CFR 593.8; delegations of authority at 49 CFR 1.50 and 501.8.

Issued on March 8, 1995.

Harry Thompson,

Acting Director, Office of Vehicle Safety Compliance.

[FR Doc. 95–6149 Filed 3–13–95; 8:45 am]

BILLING CODE 4190–59–M

[Docket No. 74–40; Notice 8]

Insurance Cost Information Regulation

AGENCY: National Highway Traffic Safety Administration (NHTSA), DOT.

ACTION: Notice of text and data for 1995 insurance cost information booklet.

SUMMARY: This notice provides the 1995 text and data that new car dealers must include in an insurance cost information booklet that they must make available to prospective purchasers, pursuant to 49 CFR 582.4. This information may assist prospective purchasers in comparing differences in passenger vehicle collision loss experience that could affect auto insurance costs.

FOR FURTHER INFORMATION CONTACT: Mr. Orron Kee, Office of Market Incentives, NHTSA, 400 Seventh Street SW., Washington, DC 20590 (202–366–0846).

SUPPLEMENTARY INFORMATION: Pursuant to section 201 (e) of the Motor Vehicle Information and Cost Savings Act, 15 U.S.C. 1941 (e), on March 5, 1993, 58 FR 12545, the National Highway Traffic Safety Administration (NHTSA) amended 49 CFR Part 582, Insurance Cost Information Regulation, to require dealers of new automobiles to distribute to prospective customers information that compares differences in insurance costs of different makes and models of passenger cars based on differences in damage susceptibility. On March 17, 1994, NHTSA denied a petition submitted by the National Automobile Dealers Association (NADA) for NHTSA to reconsider Part 582 insofar as it requires new automobile dealers to prepare the requisite number of copies for distribution of the insurance cost information to prospective purchasers (59 FR 13630). On March 22, 1994, NHTSA published a Notice of Proposed Rulemaking (NPRM) to amend Part 582 in a number of respects (59 FR 13634). NHTSA is currently considering the comments received in response to that NPRM, and the publication of today's Notice, which is statutorily mandated, should not be construed as implying any agency decision on the pending NPRM.

Pursuant to 49 CFR 582.4, new automobile dealers are required to make available to prospective purchasers booklets that include this comparative information as well as certain mandatory explanatory text that is set out in § 582.5. Early each year, NHTSA publishes updated annual data in the Notices section of the **Federal Register**. Booklets reflecting the updated data must be available for distribution to prospective purchasers without charge within 30 days from the date of publication of the data in the **Federal Register**.

NHTSA has mailed a sample copy of the 1995 booklet to each dealer on the mailing list that the Department of Energy uses to distribute the ''Gas Mileage Guide.'' Dealers will have the responsibility of reproducing a sufficient number of copies of the booklet to assure that they are available for retention by prospective purchasers by April 13, 1995. Dealers who do not receive a copy of the booklet within 15 days of the date of this notice should contact Mr. Orron Kee of NHTSA's Office of Market Incentives ((202) 366–0846) to receive a copy of the booklet and to be added to the mailing list.

The required text and data are as follows:

Comparison of Differences in Insurance Costs for Passenger Motor Vehicles on the Basis of Damage Susceptibility

February 1995.

The National Highway Traffic Safety Administration (NHTSA) has provided the information in this booklet in compliance with Federal law as an aid to consumers considering the purchase of a new vehicle. The booklet compares differences in insurance costs for different makes and models of passenger cars on the basis of damage susceptibility. However, it does not indicate a vehicle's relative safety.

The following table contains the best available information regarding the effect of damage susceptibility on insurance premiums. It was taken from data compiled by the Highway Loss Data Institute (HLDI) in its December 1994 Insurance Collision Report, and reflects the collision loss experience of passenger vehicles sold in the United States in terms of the average loss payment per insured vehicle year for model years 1992–1994. NHTSA has not verified the data in this table.

The table presents vehicles' collision loss experience in relative terms, with 100 representing the average for all passenger vehicles. Thus, a rating of 122 reflects a collision loss experience that is 22 percent higher (worse) than average while a rating of 96 reflects a collision loss experience that is 4 percent lower (better) than average. The table does not include information about new models, models that have been substantially redesigned, and models without enough claim experience.

Although many insurance companies use the HLDI information to adjust the ''base rate'' for the collision portion of their insurance premiums, the amount of any such adjustment is usually small. It is unlikely that your total premium will vary more than ten percent depending upon the collision loss experience of a particular vehicle. If you do not purchase collision coverage or your insurance company does not use the HLDI information, your premium will not vary at all in relation to these rankings.

In addition, different insurance companies often charge different premiums for the same driver and vehicle. Therefore, you should contact insurance company agents directly to determine the actual premium that you will be charged for insuring a particular vehicle.

Please Note: In setting insurance premiums, insurance companies mainly rely on factors that are not directly related to the vehicle itself (except for its value). Rather, they mainly consider driver characteristics (such as age, gender, marital status, and driving record), the geographic area in which the vehicle is driven, how many miles are traveled, and how the vehicle is used. Therefore, to obtain complete information about insurance premiums, you should contact insurance companies directly.

Insurance companies do not generally adjust their premiums on the basis of data reflecting the crashworthiness of different vehicles. However, some companies adjust their premiums for personal injury protection and medical payments coverage if the insured vehicle has features that are likely to improve its crashworthiness, such as air bags and automatic seat belts.

Test data relating to vehicle crashworthiness are available from NHTSA's New Car Assessment Program (NCAP). NCAP test results demonstrate relative frontal crash protection in new vehicles. Information on vehicles that NHTSA has tested in the NCAP program can be obtained by calling the agency's toll-free Auto Safety Hotline at (800) 424–9393.

COLLISION INSURANCE LOSSES, MODEL YEAR 1992–94 PASSENGER MOTOR VEHICLES*

Make	Model	Relative loss payment
Small Cars—Two-Door Models		
Average for small two-door models		123
Subaru	Justy	91
Suzuki	Swift	104
Saturn	SC	106
Toyota	Tercel	110
Dodge	Shadow	115
Mitsubishi	Precis	115
Plymouth	Laser	115
Mazda	323	116
Geo	Metro	116
Plymouth	Sundance	117
Mitsubishi	Eclipse	121
Plymouth	Laser 4WD	123
Mitsubishi	Eclipse 4WD	125
Eagle	Talon	125
Hyundai	Excel	128
Ford	Escort	135
Toyota	Paseo	138
Nissan	Sentra	142
Eagle	Talon 4WD	145
Nissan	240SX Conv.	150
Hyundai	Scoupe	154
Mitsubishi	Mirage	169
Volkswagen	Corrado	247
Four-Door Models		
Average for small four-door models		110
Mercury	Tracer	93
Subaru	Impreza 4WD	95
Ford	Escort	100
Dodge	Shadow	102
Plymouth	Sundance	108
Geo	Metro	109
Suzuki	Swift	114
Geo	Prizm	116
Toyota	Tercel	117
Subaru	Impreza	119
Nissan	Sentra	119
Toyota	Corolla	121
Volkswagen	Golf III	122
Volkswagen	Jetta III	123
Mazda	Protege	127
Hyundai	Excel	131
Hyundai	Elantra	147
Station Wagons/Passenger Vans		
Average for small station wagons/passenger vans		79
Subaru	Loyale 4WD	74
Subaru	Impreza 4WD	79
Subaru	Impreza	83
Ford	Escort	85
Mercury	Tracer	86
Toyota	Corolla	101
Sports Models		
Average for small sports models		144
Mazda	MX–5 Miata Conv	91
Mercedes	SL Class Conv	101
Mercury	Capri Conv	113
Honda	Civic Del Sol. Conv	116
Chevrolet	Corvette Conv	134
Dodge	Stealth	138
Porsche	911 Targa/Coupe	140
Chevrolet	Corvette	147
Mitsubishi	3000 GT	152

COLLISION INSURANCE LOSSES, MODEL YEAR 1992–94 PASSENGER MOTOR VEHICLES*—Continued

Make	Model	Relative loss payment
Toyota	MR2	157
Alpha Romeo	Spider Conv	171
Saab	900 Convertible	181
Porsche	968 Coupe	203
Nissan	300ZX	218
Nissan	300ZX Conv	244
Dodge	Stealth 4WD	256
Mazda	RX–7 Coupe	282
Mitsubishi	3000 GT 4WD	286
Porsche	911 Convertible	324
Midsize Cars—Two-Door Models		
Average for midsize two-door models		109
Oldsmobile	Cutlass Supreme	68
Oldsmobile	Achieva	70
Oldsmobile	Cutlass Supreme Conv	71
Buick	Regal	81
Chevrolet	Lumina	83
Pontiac	Grand Am	92
Pontiac	Grand Prix	92
Chevrolet	Cavalier	97
Pontiac	Sunbird Convertible	99
Pontiac	Sunbird	99
Honda	Accord	100
Chevrolet	Cavalier Convertible	101
Mercury	Topaz	101
Ford	Tempo	104
Toyota	Camry	105
Chrysler	LeBaron Convertible	107
Honda	Civic	112
Chevrolet	Beretta	116
Honda	Civic Coupe	130
Mazda	MX–6	140
Acura	Integra	145
Toyota	Celica	149
Honda	Prelude	156
Ford	Probe	159
Four-Door Models		
Average for midsize 4-door models		91
Buick	Skylark	56
Chevrolet	Lumina	62
Oldsmobile	Cutlass Supreme	62
Oldsmobile	Achieva	67
Buick	Regal	67
Buick	Century	68
Oldsmobile	Cutlass Ciera	77
Chrysler	LeBaron	77
Pontiac	Grand Prix	80
Dodge	Spirit	80
Pontiac	Grand Am	81
Ford	Taurus	81
Plymouth	Acclaim	82
Mercury	Sable	83
Saturn	SL	83
Ford	Tempo	87
Chevrolet	Cavalier	87
Chevrolet	Corsica	92
Pontiac	Sunbird	93
Honda	Accord	93
Nissan	Altima	99
Mitsubishi	Diamante	101
Subaru	Legacy	103
Toyota	Camry	104
Subaru	Legacy 4WD	104
Honda	Civic	107
Mitsubishi	Galant	113
Infiniti	G20	114

COLLISION INSURANCE LOSSES, MODEL YEAR 1992–94 PASSENGER MOTOR VEHICLES*—Continued

Make	Model	Relative loss payment
Volvo	850	117
Mercury	Topaz	119
Hyundai	Sonata	121
Nissan	Maxima	123
Mazda	626	125
Acura	Integra	127
Lexus	ES 300	127
Saab	900	139
Audi	90	143
Volkswagen	Passat	146
Station-Wagons/Passenger Vans		
Average for midsize station wagons/passenger vans		80
Buick	Century	55
Honda	Accord	61
Mitsubishi	Diamante	64
Oldsmobile	Cutlass Ciera	64
Subaru	Legacy	70
Saturn	SW	71
Chevrolet	Cavalier	75
Ford	Taurus	76
Mercury	Sable	77
Subaru	Legacy 4WD	99
Volvo	850	100
Volkswagen	Passat	106
Toyota	Camry	111
Sports Models		
Average for midsize sports models		141
Ford	Mustang Convertible	130
Ford	Mustang	135
Pontiac	Firebird	154
Chevrolet	Camaro	163
Subaru	SVX 4WD	175
Nissan	300ZX 2+2	208
Toyota	Supra	372
Acura	NSX	554
Luxury Models		
Average for midsize luxury models		149
Lincoln	Continental	93
BMW	300i Series Conv.	109
Volvo	940/960 SW	112
Cadillac	Eldorado	116
Mercedes	C Class 4-door	122
Volvo	940/960 4-door	123
Audi	100 4-door	128
Infiniti	J30	153
Saab	9000	168
BMW	500iT Series SW	169
BMW	500i Series 4-door	170
Audi	100/S4 Quattro	173
Lexus	SC 300/400	178
Lexus	GS 300	185
BMW	300i Series 2-door	196
BMW	300i Series 4-door	214
Jaguar	XJ 2-door	253
Jaguar	XJ Convertible	258
Large Cars—Two-Door Models		
Average for large two-door models		87
Mercury	Cougar	73
Ford	Thunderbird	87

COLLISION INSURANCE LOSSES, MODEL YEAR 1992–94 PASSENGER MOTOR VEHICLES*—Continued

Make	Model	Relative loss payment
Four-Door Models		
Average for large four-door models		85
Ford	Crown Victoria	74
Chevrolet	Caprice	79
Buick	LeSabre	80
Chrysler	Concorde	81
Mercury	Grand Marquis	83
Eagle	Vision	85
Oldsmobile	Eighty-Eight	86
Oldsmobile	Ninety-Eight	86
Dodge	Intrepid	87
Pontiac	Bonneville	88
Chrysler	New Yorker (LH Body)	92
Buick	Roadmaster	92
Buick	Park Avenue	96
Acura	Vigor	127
Station Wagons/Passenger Vans		
Average for large station wagons/passenger vans		69
Chevrolet	Astro Van	53
Oldsmobile	Silhouette	54
Dodge	Caravan 4WD	56
GMC	Safari Van	63
Plymouth	Voyager 4WD	63
Nissan	Quest Wagon	63
Dodge	Caravan	63
Mercury	Villager Wagon	63
Pontiac	Trans Sport	65
Chevrolet	Astro Van 4WD	65
Plymouth	Voyager	65
Chrysler	Town & Country	65
Chevrolet	Lumina APV	66
Chrysler	Town &Country 4WD	75
Ford	Aerostar Van	77
Toyota	Previa Van	83
Buick	Estate Wagon	84
Volkswagen	Eurovan	88
Chevrolet	Caprice	91
Ford	Aerostar Van 4WD	92
Toyota	Previa Van 4WD	98
Mazda	MPV Van	120
Madza	MPV Van 4WD	122
Luxury Models		
Average for Large Luxury Models		122
Cadillac	DeVille 4-door	79
Lincoln	Town Car	93
Chrysler	LHS	98
Cadillac	Seville	110
Lincoln	Mark VIII	112
Cadillac	Brougham	127
Acura	Legend 4-door	139
Lexus	LS 400	151
Infiniti	Q45	160
Mercedes	SL Class LWB 4-door	161
Mercedes	E Class 4-door	171
Mazda	929	173
Acura	Legend 2-door	189
BMW	700iL	194
BMW	740i	202
Jaguar	XJ 4-door	217
Pickups—Small Pickups		
Average for small pickups		86
Mazda	Reg/ext. cab	63
Dodge	Dakota 4WD	76

COLLISION INSURANCE LOSSES, MODEL YEAR 1992–94 PASSENGER MOTOR VEHICLES*—Continued

Make	Model	Relative loss payment
Ford	Ranger	77
Dodge	Dakota	78
Chevrolet	T10 4WD	79
Chevrolet	S10	83
Nissan	Regular/ext. cab	86
GMC	T15 4WD	88
Mitsubishi	Regular/ext. Cab	91
GMC	S15	93
Nissan	Reg/ext. cab 4WD	93
Mitsubishi	Standard Bed 4WD	95
Ford	Ranger 4WD	97
Isuzu	Regular/ext. cab	98
Mazda	Regular/ext. cab 4WD	105
Isuzu	Reg/ext. cab 4WD	107
Toyota	Reg/ext. Cab 4WD	108
Toyota	Regular/ext. Cab	110
Standard Pickups		
Average for standard pickups		65
Ford	F–150 4WD	58
GMC	1500	61
Chevrolet	1500	61
GMC	2500	62
Ford	F–250	62
GMC	1500 4WD	62
Ford	F–350	62
Chevrolet	1500 4WD	63
Chevrolet	2500 4WD	66
Ford	F–150	66
GMC	2500 4WD	66
Chevrolet	2500	67
GMC	3500 4WD	73
Ford	F–350 4WD	73
Ford	F–250 4WD	75
Chevrolet	3500	77
Dodge	Ram 2500	77
Chevrolet	3500 4WD	77
Dodge	Ram 1500	78
Dodge	Ram 1500 4WD	81
Dodge	Ram 2500 4WD	84
GMC	3500	86
Utility Vehicles—Small Utility Vehicles		
Average for small utility vehicles		95
Jeep	Wrangler	77
Suzuki	Sidekick 4-door 4WD	83
Suzuki	Samurai 4WD	84
Suzuki	Sidekick 4-door	85
Suzuki	Sidekick 2-door 4WD	98
Suzuki	Sidekick 2-door	105
Isuzu	Amigo 4WD	116
Geo	Tracker	117
Geo	Tracker 4WD	127
Isuzu	Amigo	132
Intermediate Utility Vehicles		
Average for intermediate utility vehicles		87
Ford	Explorer 4-door	57
Jeep	Grand Cherokee 4-door	65
Jeep	Cherokee 4-door	72
Chevrolet	K1500 Blazer	73
Jeep	Cherokee 2-door	73
Ford	Explorer 4-door 4WD	74
Ford	Explorer 2-door	74
Mazda	Navajo 2-door	74
GMC	Yukon 4WD	75
Ford	Bronco	78
GMC	S15 Jimmy 4-door	80

COLLISION INSURANCE LOSSES, MODEL YEAR 1992–94 PASSENGER MOTOR VEHICLES*—Continued

Make	Model	Relative loss payment
Jeep	Grand Cherokee 4-dr 4WD	84
Chevrolet	S10 Blazer 4-door	85
Jeep	Cherokee 4-door 4WD	86
Mazda	Navajo 2-door 4WD	88
Ford	Explorer 2-door 4WD	90
GMC	T15 Jimmy 4-door 4WD	91
GMC	S15 Jimmy 2-door	93
Chevrolet	T10 Blazer 4-door 4WD	94
Jeep	Cherokee 2-door 4WD	95
Chevrolet	S–10 Blazer 2-door	98
Isuzu	Rodeo 4-door	100
Oldsmobile	Bravada 4-door 4WD	105
Isuzu	Trooper 4-door 4WD	110
Chevrolet	T10 Blazer 2-door 4WD	112
Isuzu	Rodeo 4-door 4WD	114
Toyota	4Runner Wagon 4-door	119
Nissan	Pathfinder 4-door 4WD	120
Mitsubishi	Montero 4-door 4WD	122
Nissan	Pathfinder 4-door	125
GMC	T15 Jimmy 2-door 4WD	131
Honda	Passport 4-door 4WD	133
Toyota	4Runner Wagon 4-dr 4WD	140
Toyota	Land Cruiser	141
Land Rover	Range Rover LWB	252
Land Rover	Range Rover	269
Large Utility Vehicles		
Average for large utility vehicles		67
Chevrolet	Suburban 2500	54
Chevrolet	Suburban 1500	60
GMC	Suburban 1500	62
GMC	Suburban 2500	64
Chevrolet	Suburban 1500 4WD	67
Chevrolet	Suburban 2500 4WD	69
GMC	Suburban 1500 4WD	80
GMC	Suburban 2500 4WD	98
Large Vans		
Average for large vans		64
Dodge	B150	38
Dodge	B250	42
Chevrolet	Sportvan 30	50
GMC	Vandura 2500	53
Chevrolet	Astro Cargo Van	55
Ford	E–250 Econoline	60
Ford	E–150 Club Wagon	60
Chevrolet	Chevy Van 20	60
Ford	E–150 Econoline	61
Dodge	B250 Cargo Van	68
Chevrolet	Chevy Van 30	70
Dodge	B150 Cargo Van	71
Dodge	B350 Cargo Van	73
Ford	E–350 Club Wagon	84
Ford	E–350 Econoline	86
Ford	Aerostar Cargo Van	90
Dodge	B350	91
Dodge	Caravan Cargo Van	116

If you would like more details about the information in this table, or wish to obtain the complete Insurance Collision Report, please contact HLDI directly, at: Highway Loss Data Institute, 1005 North Glebe Road, Arlington, VA 22201, Tel: (703) 247–1600.

(49 U.S.C. 32302; delegation of authority at 49 CFR 1.50(f).)

Issued on March 9, 1995.

Barry Felrice,

Associate Administrator for Safety Performance Standards.

[FR Doc. 95–6229 Filed 3–13–95; 8:45 am]

BILLING CODE 4910–59–P

DEPARTMENT OF THE TREASURY

Public Information Collection Requirements Submitted to OMB for Review

March 7, 1995.

The Department of the Treasury has submitted the following public information collection requirement(s) to OMB for review and clearance under the Paperwork Reduction Act of 1980, Public Law 96–511. Copies of the submission(s) may be obtained by calling the Treasury Bureau Clearance Officer listed. Comments regarding this information collection should be addressed to the OMB reviewer listed and to the Treasury Department Clearance Officer, Department of the Treasury, Room 2110, 1425 New York Avenue, NW., Washington, DC 20220.

Internal Revenue Service (IRS)

OMB Number: 1545–0429.

Form Number: IRS Form 4506.

Type of Review: Extension.

Title: Request for Copy or Transcript of Tax Form.

Description: 26 U.S.C. 7513 allows for taxpayers to request a copy of a return. Form 4506 is used by a taxpayer to request a copy of a Federal tax form. The information provided will be used for research to locate the tax form and to ensure that the requestor is the taxpayer.

Respondents: Business or other for-profit, Individuals or households, Farms, Federal Government, State, Local or Tribal Government.

Estimated Number of Respondents/Recordkeepers: 914,540.

Estimated Burden Hours Per Respondent/Recordkeeper:

Recordkeeping—13 min.
Learning about the law or the form—7 min.
Preparing the form—25 min.
Copying, assembling, and sending the form to the IRS—17 min.

Frequency of Response: On occasion.

Estimated Total Reporting/Recordkeeping Burden: 960,267 hours.

OMB Number: 1545–0441.

Form Number: IRS Forms 6559 and 6559–A.

Type of Review: Extension

Title:

1. Transmitter Report and Summary of Magnetic Media (6559), and
2. Continuation Sheet for Form 6559.

Description: Forms 6559 and 6559–A are used by filers of Form W–2 wage and tax data to transmit filing on magnetic media. The Social Security Administration (SSA) and the Internal Revenue Service (IRS) need signed jurat and summary data for processing purposes. The forms are used primarily by large employers and tax filing services (service bureaus).

Respondents: Business or other for-profit, not-for-profit institutions, farms, Federal Government, State, Local or Tribal Government.

Estimated Number of Respondents: 100,000

Estimated Burden Hours Per Respondent: 15 minutes.

Frequency of Response: Annually.

Estimated Total Recordkeeping Burden: 30,000 hours.

OMB Number: 1545–0720.

Form Number: IRS Forms 8038, 8038–G, and 8038–GC.

Type of Review: Revision.

Title:

1. Information Return for Tax-Exempt Private Activity Bond Issues (8038);
2. Information Return for Tax-Exempt Governmental Obligations (8038–G); and
3. Information Return for Small Tax-Exempt Governmental Bond Issues, Leases, and Installment Sales (8038–GC).

Description: Forms 8039, 8038–G and 8038–GC collect the information that IRS is required to collect by Code section 149(e). IRS uses the information to assure that tax-exempt bonds are issued consistent with the rules of Internal Revenue Code (IRC) sections 141–149.

Respondents: State, Local or Tribal Government, Not-for-profit institutions.

Estimated Number of Respondents/Recordkeepers: 14,500.

Estimated Burden Hours Per Respondent/Recordkeeper:

	Form 8038	Form 8038–G	Form 8038–GC
Recordkeeping	6 hours, 2 minutes	2 hours, 17 minutes	1 hour, 46 minutes.
Preparing the form	7 hours, 37 minutes	2 hours, 22 minutes	2 hours, 50 minutes.
Copying, assembling, and sending the form to the IRS.	16 minutes	0 minutes	16 minutes.

Frequency of Response: Quarterly, Annually, Other.

Estimated Total Reporting/Recordkeeping Burden: 836,140 hours.

OMB Number: 1545–0959.

Regulation ID Number: LR–213–76 Final Regulations.

Type of Review: Extension.

Title: Estate and Gift Taxes; Qualified Disclaimers of Property.

Description: Section 2518 allows a person to disclaim an interest in property received by gift or inheritance. The interest is treated as if the disclaimant never received or transferred such interest for Federal gift tax purposes. A qualified disclaimer must be in writing and delivered to the transferor or trustee.

Respondents: Individuals or households.

Estimated Number of Respondent: 2,000.

Estimated Burden Hours Per Respondent: 30 minutes.

Frequency of Response: On occasion.

Estimated Total Recordkeeping Burden: 1,000 hours.

OMB Number: 1545–1057.

Form Number: IRS Form 8800.

Type of Review: Revision.

Title: Application for Additional Extension of Time to File U.S. Return for a Partnership, REMIC, or for Certain Trusts.

Description: Form 8800 is used by partnerships, REMICs, and by certain trusts to request an additional extension of time (up to 3 months) to file Form 1065, Form 1041, or Form 1066. Form 8800 contains data needed by the IRS to determine whether or not a taxpayer qualifies for such an extension.

Respondents: Business or other for-profit, Farms.

Estimated Number of Respondents: 20,000.

Estimated Burden Hours Per Respondent: 13 minutes.

Frequency of Response: Annually.

Estimated Total Reporting Burden: 4,210 hours.

Clearance Officer: Garrick Shear, (202) 622–3869, Internal Revenue Service, Room 5571, 1111 Constitution Avenue NW., Washington, DC 20224.

OMB Reviewer: Milo Sunderhauf, (202) 395–7340, Office of Management and Budget, Room 10226, New Executive Office Building,Washington, DC 20503.

Lois K. Holland,

Departmental Reports, Management Officer.

[FR Doc. 95–6232 Filed 3–13–95; 8:45 am]

BILLING CODE 4830–01–P

Office of Thrift Supervision

[No. 94–260]

Privacy Act of 1974 as Amended; Systems of Records

AGENCY: Office of Thrift Supervision, Treasury.

ACTION: Notice of Privacy Act Systems of Records.

SUMMARY: The Office of Thrift Supervision (OTS) is publishing this notice to notify all interested parties of its complete systems of records in accordance with the Privacy Act of 1974, 5 U.S.C. 552a (Privacy Act).

EFFECTIVE DATE: Comments must be received no later than April 13, 1995.

The systems will be effective May 15, 1995, unless the OTS receives comments on the systems which would result in a contrary determination.

ADDRESSES: Send comments to: Director, Information Services Division, Records and Management Information, Office of Thrift Supervision, 1700 G Street, NW., Washington, DC, 20552, Attention Docket No. 94–260. These submissions may be hand delivered to 1700 G Street, NW., from 9 a.m. to 5 p.m. on business days; they may be sent by facsimile transmission to FAX number (202) 906–7755. Submissions must be received by 5 p.m. on the date that they are due in order to be considered by the OTS. Comments will be available for inspection at 1700 G Street, NW., from 1 p.m. until 4 p.m. on business days. Visitors will be escorted to and from the Public Reading Room at established intervals.

FOR FURTHER INFORMATION CONTACT: Mary Ann Reinhart, Chief, Disclosure Branch, Office of Thrift Supervision, 1700 G Street, NW, Washington, DC 20552, Telephone No. (202) 906–5896.

SUPPLEMENTARY INFORMATION: The Federal Home Loan Bank Board (FHLBB), the OTS's predecessor in interest, for purposes of the Privacy Act, was abolished by the Financial Institutions Reform, Recovery, and Enforcement Act of 1989 (FIRREA), Pub. L. 101–73, 103 Stat. 183, enacted August 9, 1989. The Privacy Act regulations formerly appearing at 12 CFR part 505a were substantially superseded because the OTS, as a component part of the Treasury Department, is covered by the Privacy Act regulations appearing at 31 CFR part 1, subpart C. At 54 FR 49411, Nov. 30, 1989, chapter V was revised. At 55 FR 43434, October 29, 1990, the OTS adopted the systems of records of the FHLBB. 12 CFR part 503 was published as an interim measure to ensure that all necessary and appropriate information was available to the public concerning OTS's Privacy Act provisions. A complete list of the systems of records is attached.

Dated: March 6, 1995.

Alex Rodriguez,

Deputy Assistant Secretary (Administration).

Table of Contents

Treasury/OTS .001 Confidential Individual Information System
Treasury/OTS .002 Correspondence/Correspondence Tracking
Treasury/OTS .003 Consumer Complaint
Treasury/OTS .004 Criminal Referral Database
Treasury/OTS .005 Employee Counseling Service
Treasury/OTS .006 Employee Locator File
Treasury/OTS .007 Employee Parking
Treasury/OTS .008 Employee Training Database
Treasury/OTS .009 Health Files
Treasury/OTS .010 Inquiry/Request Control
Treasury/OTS .011 Positions/Budget
Treasury/OTS .012 Payroll/Personnel System & Payroll Records
Treasury/OTS .013 Personnel Security and Suitability Program

Treasury/OTS .001

SYSTEM NAME:

Confidential Individual Information System.

SYSTEM LOCATION:

Office of Thrift Supervision, Department of the Treasury, 1700 G Street, NW., Washington, DC 20552.

See Appendix A for appropriate local address of OTS Regional Offices.

CATEGORIES OF INDIVIDUALS COVERED BY THE SYSTEM:

These records contain certain information concerning individuals who have filed notices of intention to acquire control of a savings association; controlling persons of companies that have applications to acquire control of a savings association; organizers of savings associations who have sought Federal Savings and Loan Insurance Corporation or Savings Association Insurance Fund insurance of accounts or federal charters; individuals who have been the subject of administrative enforcement actions or other civil actions by any agency with authority to supervise or regulate federally insured depository institutions; those who have been named in criminal referrals by such agencies or by federally insured depository institutions or who have been referred to professional societies, licensing authorities or ethics committees for disciplinary purposes; individuals identified as the subjects of criminal investigations by the Department of Justice or state law enforcement authorities in connection with the operation of Federally insured depository institutions; individuals denied employment as senior executive officers with or member of a board of directors of a savings association or savings and loan holding company pursuant to 12 U.S.C. section 1831i; and persons engaging in significant business transactions with savings associations. This system also contains the identity of the custodian of any documents describing the specific event causing entry into the system.

CATEGORIES OF RECORDS IN THE SYSTEM:

These records identify the individual involved, and his or her relationship to the savings association, service corporation or savings and loan holding company; identify and describe the event causing entry of information into the system (e.g., a change in control filing, enforcement action, or criminal referral) and any regulatory, judicial, or supervisory action taken as a result; and the location and nature of any additional records concerning the specific event.

AUTHORITY FOR MAINTENANCE OF THE SYSTEM:

12 U.S.C. 1464.

PURPOSE(S):

This system is the primary OTS database to record information on individuals subject to criminal referrals, enforcement actions, liability suits, or investigations on unusual transactions; and on application activity to acquire control, obtain a charter, elect an officer of a thrift, and several other application types. It also keeps track of the names of criminal referrals and individual defendants in directors' and officers' liability lawsuits brought by Federal banking agencies.

ROUTINE USES OF RECORDS MAINTAINED IN THE SYSTEM, INCLUDING CATEGORIES OF USERS AND THE PURPOSES OF SUCH USES:

Informaiton in these records may be used to:

(1) Provide the Department of Justice with periodic reports on the number, place, and individual identify of outstanding potential criminal violations of the law that have been referred to the Department;

(2) provide information or records to any other appropriate domestic or foreign governmental agency or self-regulatory organization charged with the responsibility of administering law or investigating or prosecuting violations of law or charged with enforcing or implementing a statute, rule, regulation, order or license;

(3) provide information to third parties during the course of an investigation to the extent necessary to

obtain information pertinent to the investigation;

(4) provide information to receivers or conservators of savings associations or formerly insured savings associations;

(5) when considered appropriate, provide information to a bar assocaiton, the American Institute of Certified Public Accountants, or other professional organizations performing similar functions, for possible disciplinary action; and

(6) provide information to any person with whom the OTS contracts to reproduce, by typing, photocopying or other means, any record within this system for use by the OTS and its staff in connection with their official duties or to any person who is utilized by the OTS to perform clerical or stenographic functions relating to the official business of the OTS.

POLICIES AND PRACTICES FOR STORING, RETRIEVING, ACCESSING, RETAINING, AND DISPOSING OF RECORDS IN THE SYSTEM:

STORAGE:

Records are maintained in paper files and on magnetic media.

RETRIEVABILITY:

Records are retrievable by the name of the individual and/or by the individual's relationship to the thrift or thrift holding company involved.

SAFEGUARDS:

Paper records are maintained in locked file cabinets with access limited to those persons who have need for information from the system in the performance of their duties. Access to computerized records is limited, through the use of a password, to those whose official duties require access.

RETENTION AND DISPOSAL:

Records are retained for fifteen years and then destroyed.

SYSTEM MANAGER(S) AND ADDRESS:

National Administrator, Corporate Activities Division. See ''System Location'' for address.

NOTIFICATION PROCEDURE:

This system is exempt from notification and record-access requirements and requirements that an individual be permitted to contest its contents under 5 U.S.C. 552a (j)(2) and (k)(2) as relating to investigatory material compiled for law enforcement purposes.

RECORD ACCESS PROCEDURES:

See ''Notification Procedure'' above.

CONTESTING RECORD PROCEDURES:

See ''Notification Procedure'' above.

RECORD SOURCE CATEGORIES:

This system is exempted under 5 U.S.C. 552a (j)(2) and (k)(2) from the requirements that the sources of records used in the system be published, because it contains investigatory material compiled for law enforcement purposes.

EXEMPTIONS CLAIMED FOR THE SYSTEM:

This system is exempt from 5 U.S.C. 552a (c)(3), (d), (e)(1), (e)(4) (G), (H) and (I), and (f) of the Privacy Act pursuant to 5 U.S.C. 552a (j)(2) and (k)(2).

Treasury/OTS .002

SYSTEM NAME:

Correspondence/Correspondence Tracing.

SYSTEM LOCATION:

Office of Thrift Supervision, Department of the Treasury, 1700 G Street, NW., Washington, DC 20552.

CATEGORIES OF INDIVIDUALS COVERED BY THE SYSTEM:

White House and Executive Office of the President officials, Members of Congress, Treasury Department officials, the general public, and businesses.

CATEGORIES OF RECORDS IN THE SYSTEM:

Incoming correspondence addressed to the Director of OTS; letters from members of Congress transmitting letters from constituents or making inquiries; OTS responses; OTS memoranda and notes used to prepare responses; and information concerning internal office assignments, processing and response to the correspondence.

AUTHORITY FOR MAINTENANCE OF THE SYSTEM:

5 U.S.C. 301.

PURPOSE(S):

To maintain written records of correspondence addressed to the Director of OTS and Congressional correspondence; to track the progress of the response; to document the completion of the response to the incoming correspondence.

ROUTINE USES OF RECORDS MAINTAINED IN THE SYSTEM, INCLUDING CATEGORIES OF USERS AND THE PURPOSES OF SUCH USES:

(1) Disclosures may be made to a Congressional office from the records of an individual in response to an inquiry made at the request of the individual to whom the record pertains;

(2) Information may be disclosed to the appropriate governmental agency charged with the responsibility of administering law or investigating or prosecuting violations of law or charged with enforcing or implementing a statute, rule, regulation, order or license.

POLICIES AND PRACTICES FOR STORING, RETRIEVING, ACCESSING, RETAINING, DISPOSING OF RECORDS IN THE SYSTEM:

STORAGE:

Records are maintained in magnetic media and in paper files.

RETRIEVABILITY:

Records are maintained by name of individual; assignment control number.

SAFEGUARDS: Access to paper records is limited to authorized personnel with a direct need to know. Some paper records are maintained in locked file cabinets in a secured office with access limited to those personnel whose official duties require access. Access to computerized records is limited, through the use of a password, to those whose official duties require access.

RETENTION AND DISPOSAL:

Computerized records and paper records are retained for two (2) years after the Director's or member of Congress' term, then transferred directly to the National Archives.

SYSTEM MANAGER(S) AND ADDRESS:

Director, Congressional Affairs. See ''System Location'' for address.

NOTIFICATION PROCEDURE:

Individuals wishing to be notified if they are named in this system or gain access to records maintained in this system must submit a request containing the following elements:

(1) Identify the record system;

(2) identify the category and type of records sought; and

(3) provide at least two items of secondary identification (date of birth, employee identification number, dates of employment or similar information). Address inquiries to Chief, Disclosure Branch, Office of Thrift Supervision, 1700 G Street, NW., Washington, DC 20552.

RECORD ACCESS PROCEDURES:

See ''Notification Procedure'' above.

CONTESTING RECORD PROCEDURES:

See ''Notification Procedure'' above.

RECORD SOURCE CATEGORIES:

Incoming correspondence and Office of Thrift Supervision responses.

EXEMPTIONS CLAIMED FOR THE SYSTEM:

None:

Treasury/OTS .003

SYSTEM NAME:

Consumer Complaint System.

SYSTEM LOCATION:

Office of Thrift Supervision, Department of the Treasury, 1700 G Street, NW., Washington, DC., 20552.

See Appendix A for appropriate local address of OTS Regional Offices.

CATEGORIES OF INDIVIDUALS COVERED BY THE SYSTEM:

Persons who submit inquiries of complaints concerning federally insured depository institutions, service corporations, and subsidiaries.

CATEGORIES OF RECORDS IN THE SYSTEM:

Consumer's name, savings association's docket number, case number as designated by a Consumer Complaint Case number. Within these categories of records, the following information may be obtained: Consumer's address, source of inquiry or complaint, nature of the inquiry or complaint, nature of the inquiry or complaint designated by instrument and complaint code, information on the investigation and resolution of inquiries and complaints.

AUTHORITY FOR MAINTENANCE OF THE SYSTEM:

PURPOSE(S):

OTS uses this system to track individual complaints and to provide additional information about each institution's compliance with regulatory requirements.

ROUTINE USES FOR RECORDS MAINTAINED IN THE SYSTEM, INCLUDING CATEGORIES OR USERS AND THE PURPOSES OF SUCH USES:

(1) Information may be disclosed to officials of regulated savings associations in connection with investigation and resolution of complaints and inquiries;

(2) relevant information may be made available to appropriate law enforcement agencies or authorities in connection with investigation and/or prosecution of alleged civil, criminal and administrative violations;

(3) disclosures may be made to a Congressional office in response to an inquiry made at the request of the individual to whom the record pertains;

(4) disclosures may be made to other Federal and nonfederal governmental supervisory or regulatory authorities when the subject matter is within such other agency's jurisdiction.

POLICIES AND PRACTICES FOR STORING, RETRIEVING, ACCESSING, RETAINING, AND DISPOSING OF RECORDS IN THE SYSTEM:

STORAGE:

Records are maintained in paper files and on magnetic media.

RETRIEVABILITY:

By name of the individual, complaint case number, savings association name, docket number, district complaint code, instrument code, source code or by some combination thereof.

SAFEGUARDS:

Paper records are maintained in locked file cabinets with access limited to those personnel whose official duties require access. Access to computerized records is limited, through use of system passwords, to those whose official duties require access.

RETENTION AND DISPOSAL:

Active files are maintained until the case is closed. Closed files are retained for six (6) years then destroyed.

SYSTEM MANAGER(S) AND ADDRESS:

Manager, Consumer Programs, See ''System Location'' for address.

NOTIFICATION PROCEDURE:

Individuals wishing to be notified if they are named in this system or gain access to records maintained in this system must submit a request containing the following elements:

(1) Identify the record system;

(3) provide at least two items of secondary identification (date of birth, employee identification number, dates of employment or similar information). Address inquiries to Chief, Disclosure Branch, Office of Thrift Supervision, 1700 G Street, NW., Washington, DC 20552.

RECORD ACCESS PROCEDURES:

See ''Notification Procedure'' above.

CONTESTING RECORD PROCEDURES:

See ''Notification Procedure'' above.

RECORD SOURCE CATEGORIES:

Inquirer or complainant (or his or her representative which may include a member of Congress or an attorney); savings association officials and employees; compliance/safety and soundness examiner(s); and other supervisory records.

EXEMPTIONS CLAIMED FOR THE SYSTEM:

None.

Treasury/OTS .004

SYSTEM NAME:

Criminal Referral Database.

SYSTEM LOCATION:

Office of Thrift Supervision, Department of the Treasury, 1700 G Street, NW., Washington, DC 20552.

See Appendix A for appropriate local address of OTS Regional Offices.

CATEGORIES OF INDIVIDUALS COVERED BY THE SYSTEM:

Individuals suspected of having committed crime(s) and individuals indicated or convicted of crime(s) against or involving savings associations.

CATEGORIES OF RECORDS IN THE SYSTEM:

Criminal Referrals.

AUTHORITY FOR MAINTENANCE OF THE SYSTEM:

12 U.S.C. 1464; 44 U.S.C. 3101.

PURPOSE(S):

This system lists all matters referred to the Department of Justice for possible criminal proceedings.

ROUTINE USES OF RECORDS MAINTAINED IN THE SYSTEM, INCLUDING CATEGORIES OF USERS AND THE PURPOSES OF SUCH USES:

Information may be disclosed to the appropriate governmental agency charged with the responsibility of administering law or investigating or prosecuting violations of law or charged with enforcing or implementing a statute, rule, regulation, order or license.

POLICIES AND PRACTICES FOR STORING, RETRIEVING, ACCESSING, RETAINING, AND DISPOSING OF RECORDS IN THE SYSTEM:

STORAGE:

Records are maintained in paper files and on magnetic media.

RETRIEVABILITY:

Records are filed by name of individual, savings institution or referral control number.

SAFEGUARDS:

Paper records are maintained in locked file cabinets. Access is limited to personnel whose official duties require such access and who have a need to know the information in a record for a job-related purpose. Access to computerized records is limited, through use of a password, to those whose official duties require access.

RETENTION AND DISPOSAL:

Records are retained and disposed of in accordance with appropriate National Archives and Records Administration General Records Schedules.

SYSTEM MANAGER(S) AND ADDRESS:

Chief Counsel, Office of Enforcement. See ''System Location'' for address.

NOTIFICATION PROCEDURE:

This system is exempt from notification and record-access requirements and requirements that an individual be permitted to contest its contents under 5 U.S.C. 552a(j)(2) and (k)(2) as relating to investigatory material complied for law enforcement purposes.

RECORD ACCESS PROCEDURES:

See ''Notification Procedure'' above.

CONTESTING RECORD PROCEDURES:

See ''Notification procedure'' above.

RECORD SOURCE CATEGORIES:

Criminal referral forms compiled for law enforcement purposes.

EXEMPTIONS CLAIMED FOR THE SYSTEM:

This system is exempt from 5 U.S.C. 552a(c)(3), (c)(4), (d), (e)(1), (e)(4) (G), (H) and (I), and (f) of the Privacy Act pursuant to 5 U.S.C. 552a(j)(2) and (k)(2).

Treasury/OTS .005

SYSTEM NAME:

Employee Counseling Service.

SYSTEM LOCATION:

Office of Thrift Supervision, Department of the Treasury, 1700 G Street, NW., Washington, DC 20552.

See appendix A for appropriate local address of OTS Regional Officers.

CATEGORIES OF INDIVIDUALS COVERED BY THE SYSTEM:

Employees who seek counseling services.

CATEGORIES OF RECORDS IN THE SYSTEM:

Counseling records.

AUTHORITY FOR MAINTENANCE OF THE SYSTEM:

5 U.S.C. 301, 44 U.S.C. 3101.

PURPOSE(S):

To provide a history and record of the employee counseling session(s) and to assist the counselor in identifying and resolving employee problem(s).

ROUTINE USES OF RECORDS MAINTAINED IN THE SYSTEM, INCLUDING CATEGORIES OF USERS AND THE PURPOSES OF SUCH USES:

The system will have minimal effect on individual privacy because access is limited to the employee counseling service program counselor. Under special and emergency circumstances records may be released to medical personnel, research personnel, and as result of a court order.

POLICIES AND PRACTICES FOR STORING, RETRIEVING, ACCESSING, RETAINING, AND DISPOSING OF RECORDS IN THE SYSTEM:

STORAGE:

Records are maintained in paper files.

RETRIEVABILITY:

Records are retrieved by a number assigned to employee.

SAFEGUARDS:

Records are maintained in locked file cabinet. Access is limited to the employee counselor.

RETENTION AND DISPOSAL:

Records are retained and disposed of in accordance with the appropriate National Archives and Records Administration General Records Schedules.

SYSTEM MANAGER(S) AND ADDRESS:

Director of Human Resources. See ''System Location'' for address.

NOTIFICATION PROCEDURE:

Individuals wishing to be notified if they are named in this system or gain access to records maintained in this system must submit a request containing the following elements:

(1) Identify the record system;

(2) identify the category and type of records sought; and

(3) provide at least two items of secondary identification (date of birth, employee identification number, dates of employment or similar information). Address inquiries to Chief, Disclosure Branch, Office of Thrift Supervision, 1700 G Street, NW., Washington, DC 20552.

RECORD ACCESS PROCEDURES:

See ''Notification Procedure'' above.

CONTESTING RECORD PROCEDURES:

See ''Notification Procedure'' above.

RECORD SOURCE CATEGORIES:

Employees and Counselors.

EXEMPTIONS CLAIMED FOR THE SYSTEM:

None.

Treasury/OTS .006

SYSTEM NAME:

Employee Locator File.

SYSTEM LOCATION:

Office of Thrift Supervision, Department of the Treasury, 1700 G Street, NW., Washington, DC 20552.

See Appendix A for appropriate local address of OTS Regional Offices.

CATEGORIES OF INDIVIDUALS COVERED BY THE SYSTEM:

All present employees of the OTS and persons whose employment has been terminated within the last six months.

CATEGORIES OF RECORDS COVERED BY THE SYSTEM:

Employee's name, present address, telephone number, and the name, address, and telephone number of another person to notify in case of emergency.

AUTHORITY FOR MAINTENANCE OF THE SYSTEM:

5 U.S.C. 301, 44 U.S.C. 3101.

PURPOSE(S):

This system provides current information on employee's address and emergency contact person.

ROUTINE USES OF RECORDS MAINTAINED IN THE SYSTEM, INCLUDING CATEGORIES OF USERS AND THE PURPOSES OF SUCH USES:

(1) Disclosure of information may be made to a Congressional office in response to an inquiry made at the request of the individual to whom the record pertains;

(2) Medical personnel in case of an emergency.

POLICIES AND PRACTICES FOR STORING, RETRIEVING, ACCESSING, RETAINING, AND DISPOSING OF RECORDS IN THE SYSTEM:

STORAGE:

Records are maintained in paper files and on magnetic media.

RETRIEVABILITY:

Records are filed by name of individual.

SAFEGUARDS:

Paper records are maintained in locked file cabinets. Access is limited to personnel whose official duties require such access and who have a need to know information in a record for a particular job-related purpose. Access to computerized records is limited, through use of a password, to those whose official duties require access.

RETENTION AND DISPOSAL:

Records are maintained until the termination of the employee's employment with OTS. After termination, records are retained for six months then destroyed.

SYSTEM MANAGER(S) AND ADDRESS:

Director, Human Resources. See ''System Location'' for address.

NOTIFICATION PROCEDURE:

Individuals wishing to be notified if they are named in this system or gain access to records maintained in this system must submit a request containing the following elements:

(1) Identify the record system;

(2) Identify the category and type of records sought; and

(3) Provide at least two items of secondary identification (date of birth, employee identification number, dates of employment or similar information). Address inquiries to Chief, Disclosure Branch, Office of Thrift Supervision, 1700 G Street, NW., Washington, DC 20552.

RECORD ACCESS PROCEDURES:

See ''Notification Procedure'' above.

CONTESTING RECORD PROCEDURES:

See ''Notification Procedure'' above.

RECORD SOURCE CATEGORIES:

The individual whose record is being maintained.

EXEMPTIONS CLAIMED FOR THE SYSTEM:

None.

Treasury/OTS .007

SYSTEM NAME:

Employee Parking.

SYSTEM LOCATION:

Office of Thrift Supervision, Department of the Treasury, 1700 G Street, NW., Washington, DC 20552.

CATEGORIES OF INDIVIDUALS COVERED BY THE SYSTEM:

All OTS employees (and their corresponding car-pool members) who apply for agency-controlled parking.

CATEGORIES OF RECORDS IN THE SYSTEM:

Information is contained in parking applications and computerized reports and consists of (for each rider): Name, home address, office phone number, and place of employment (for non-OTS riders). For OTS employees only: Work hours, supervisor's name, office code, social security number and years of service.

AUTHORITY FOR MAINTENANCE OF THE SYSTEM:

5 U.S.C. 301, 44 U.S.C. 3101.

PURPOSE(S):

To control and maintain parking applications and spaces.

ROUTINE USES OF RECORDS MAINTAINED IN THE SYSTEM, INCLUDING CATEGORIES OF USERS AND THE PURPOSES OF SUCH USES:

No disclosures are made outside of OTS.

POLICIES AND PRACTICES FOR STORING, RETRIEVING, ACCESSING, RETAINING, AND DISPOSING OF RECORDS IN THE SYSTEM:

STORAGE:

Records are maintained in paper files and on magnetic media.

RETRIEVABILITY:

Records are filed by parking pass number, name of OTS employee and social security number.

SAFEGUARDS:

Paper records are maintained in locked file cabinets. Access is limited to personnel whose official duties require such access and who have a need to know the information in a record for a job-related purpose. Access to computerized records is limited, through use of a password, to those whose official duties require access.

RETENTION AND DISPOSAL:

Records are retained and disposed of in accordance with National Archives and Records Administration General Records Schedules.

SYSTEM MANAGER(S) AND ADDRESS:

Director for Administration. See ''System Location'' for address.

NOTIFICATION PROCEDURE:

Individuals wishing to be notified if they are named in this system or gain access to records maintained in this system must submit a request containing the following elements:

(1) Identify the record system;

(2) Identify the category and type of records sought; and

(3) Provide at least two items of secondary identification (date of birth, employee identification number, dates of employment or similar information). Address inquiries to Chief, Disclosure Branch, Office of Thrift Supervision, 1700 G Street, NW., Washington, DC 20552.

RECORD ACCESS PROCEDURES:

See ''Notification Procedure'' above.

CONTESTING RECORD PROCEDURES:

See ''Notification Procedure'' above.

RECORD SOURCE CATEGORIES:

Applications submitted by OTS employees and non-OTS riders.

EXEMPTIONS CLAIMED FOR THE SYSTEM:

None.

Treasury/OTS .008

SYSTEM NAME:

Employee Training Database.

SYSTEM LOCATION:

Office of Thrift Supervision, Department of the Treasury, 1700 G Street, NW., Washington, DC 20552.

CATEGORIES OF INDIVIDUALS COVERED BY THE SYSTEM:

All employees of the Office of Thrift Supervision.

CATEGORIES OF RECORDS IN THE SYSTEM:

Individual employee records are maintained by name, course taken, social security number, position, division, and manager name.

AUTHORITY FOR MAINTENANCE OF THE SYSTEM:

5 U.S.C. 301 and 44 U.S.C. 3101.

PURPOSE(S):

To maintain necessary information on training taken by employees through outside sources and vendors.

ROUTINE USES OF RECORDS MAINTAINED IN THE SYSTEM, INCLUDING CATEGORIES OF USERS AND THE PURPOSES OF SUCH USES:

Records are not disclosed outside of OTS.

POLICIES AND PRACTICES FOR STORING, RETRIEVING, ACCESSING, RETAINING, AND DISPOSING OF RECORDS IN THE SYSTEM:

STORAGE:

Records are maintained on magnetic media.

RETRIEVABILITY:

Records are filed by individual name, social security number and course taken.

SAFEGUARDS:

Access to computerized records is limited, through use of a password, to those whose official duties require access.

RETENTION AND DISPOSAL:

Records are retained and disposed of in accordance with the appropriate National Archives and Records Administration General Records Schedules.

SYSTEM MANAGER(S) AND ADDRESS:

Training Manager, Human Resources Division. See ''System Location'' for address.

NOTIFICATION PROCEDURES:

Individuals wishing to be notified if they are named in this system or gain access to records to maintained in this system must submit a request containing the following elements:

(1) Identify the record system;

(2) Identify the category and type of records sought; and

(3) Provide at least two items of secondary identification (date of birth, employee identification number, dates of employment or similar information). Address inquiries to Chief, Disclosure Branch, Office of Thrift Supervision, 1700 G Street, NW., Washington, DC 20552.

RECORD ACCESS PROCEDURES:

See ''Notification Procedure'' above.

CONTESTING RECORD PROCEDURES:

See ''Notification Procedure'' above.

RECORD SOURCE CATEGORIES:

Personnel records and training request forms completed by employee.

EXEMPTIONS CLAIMED FOR THE SYSTEM:

None.

Treasury/OTS .009

SYSTEM NAME:

Health Files.

SYSTEM LOCATION:

Office of Thrift Supervision, Department of the Treasury, 1700 G Street, NW., Washington, DC 20552.

Categories of individuals covered by the system:

Participating employees.

CATEGORIES OF RECORDS IN THE SYSTEM:

Health Records.

AUTHORITY FOR MAINTENANCE OF THE SYSTEM:

5 U.S.C. 301, 44 U.S.C. 3101.

PURPOSE(S):

To maintain records regarding medical care provided to employees of OTS by the health care unit which is now closed.

ROUTINE USES OF RECORDS MAINTAINED IN THE SYSTEM, INCLUDING CATEGORIES OF USERS AND THE PURPOSES OF SUCH USES:

No disclosures are made outside of OTS.

POLICIES AND PRACTICES FOR STORING, RETRIEVING, ACCESSING, RETAINING, AND DISPOSING OF RECORDS IN THE SYSTEM:

STORAGE:

Records are maintained in paper files.

RETRIEVABILITY:

Records are maintained by name of individual.

SAFEGUARDS:

Records re maintained at the Federal Records Center. Only authorized personnel have access to location.

RETENTION AND DISPOSAL:

Records are retained and disposed of in accordance with the appropriate National Archives and Records Administration General Records Schedules.

SYSTEM MANAGER(S) AND ADDRESS:

Director, Human Resources. See ''System Location'' for address.

NOTIFICATION PROCEDURES:

Individuals wishing to be notified if they are named in this system or gain access to records maintained in this system must submit a request containing the following elements:

(1) Identify the record system;

(2) Identify the category and type of records sought; and

(3) Provide at least two items of secondary identification (date of birth, employee identification number, dates of employment or similar information). Address inquiries to Chief, Disclosure Branch, Office of Thrift Supervision, 1700 G Street, NW., Washington, DC 20552.

RECORD ACCESS PROCEDURES:

See ''Notification Procedure'' above.

CONTESTING RECORD PROCEDURES:

See ''Notification Procedure'' above.

RECORD SOURCE CATEGORIES:

Health unit staff and subject of the record.

EXEMPTIONS CLAIMED FOR THE SYSTEM:

None.

Treasury/OTS .010

SYSTEM NAME:

Inquiry/Request Control System.

SYSTEM LOCATION:

Office of Thrift Supervision, Department of the Treasury, 1700 G Street, NW., Washington, DC 20052.

CATEGORIES OF INDIVIDUALS COVERED BY THE SYSTEM:

Persons who make inquiries, requests for records or information concerning activities of the OTS, regulated financial institutions and related individuals and organizations; e.g., holding companies, service corporations, directors of thrifts, advisors or representatives of the thrift industry and also requests for records under the Freedom of Information Act and the Privacy Act.

CATEGORIES OF RECORDS IN THE SYSTEM:

Selected items of information extracted from incoming inquiry, and records concerning internal office case assignments, processing and resolution of the inquiry/request.

AUTHORITY FOR MAINTENANCE OF THE SYSTEM:

5 U.S.C. 301.

PURPOSE(S):

To internally control work flow and assignments; to track progress of the inquiry/request; and to provide statistical information for budgetary, resource allocation, and statutory reporting purposes.

ROUTINE USES OF RECORDS MAINTAINED IN THE SYSTEM, INCLUDING CATEGORIES OF USERS AND THE PURPOSE OF SUCH USES:

Disclosure of information may be made to a Congressional office in response to an inquiry made at the request of the individual to whom the record pertains.

POLICIES AND PRACTICES FOR STORING, RETRIEVING, ACCESSING, RETAINING, AND DISPOSING OF RECORDS IN THE SYSTEM:

STORAGE:

Records are maintained in paper files and magnetic media.

RETRIEVABILITY:

Records are maintained by individual name, case control number, subject of inquiry, savings and loan association and/or financial institution, docket number, receipt date, inquiry code, disposition code, or any combination thereof.

SAFEGUARDS:

Paper records are maintained in secured offices with access limited to those personnel whose official duties require access. Access to computerized records is limited, through use of a password, to those whose official duties require access.

RETENTION AND DISPOSAL:

Records are retained for one (1) year and then destroyed. Freedom of Information Act and Privacy Act records are retained and disposed of in accordance with appropriate National Archives and Records Administration General Records Schedule.

SYSTEM MANAGER(S) AND ADDRESS:

Director, Information Services Division. See ''System Location'' for address.

NOTIFICATION PROCEDURE:

Individuals wishing to be notified if they are named in this system or gain access to records maintained in this system must submit a request containing the following elements:

(1) Identify the record system;

(2) Identify the category and type of records sought; and

(3) Provide at least two items of secondary identification (date of birth, employee identification number, dates of employment or similar information). Address inquiries to Chief, Disclosure Branch, Office of Thrift Supervision, 1700 G Street, NW., Washington, DC 20552.

RECORD ACCESS PROCEDURES:

See ''Notification Procedure'' above.

CONTESTING RECORD PROCEDURES:

See ''Notification Procedure'' above.

RECORD SOURCE CATEGORIES:

Incoming inquiry or request (by mail, fax, or telephone), internal case assignment notations, case control, and close-out forms.

EXEMPTIONS CLAIMED FOR THE SYSTEM:

None.

Treasury/OTS .011

SYSTEM NAME:

Positions/Budget.

SYSTEM LOCATION:

Office of Thrift Supervision, Department of the Treasury, 1700 G Street, NW., Washington, DC 20052.

See Appendix A for appropriate local address of OTS Regional Offices.

CATEGORIES OF INDIVIDUALS COVERED BY THE SYSTEM:

All current employees of the Office of Thrift Supervision.

CATEGORIES OF RECORDS IN THE SYSTEM:

Individual employee records are kept by office and agency as follows: Name,

title, entered on duty date, service computation date, occupation series, social security number, grade, current salary, location of employee, date of last promotion, and eligibility for promotion. Records are kept for each office (and, where appropriate, for the agency) on number of vacancies, authorized position ceilings, and number of employees.

AUTHORITY FOR MAINTENANCE OF THE SYSTEM:

5 U.S.C. 301, 44 U.S.C. 3101.

PURPOSE(S):

The system allows the OTS Budget Division the ability to track positions by office to assure the assigned Full-Time Equivalent ceilings are not exceeded and remain within the limits set by the Director of the OTS. The system also provides information to each office which can be used in developing their calendar year compensation budgets.

ROUTINE USES OF RECORDS MAINTAINED IN THE SYSTEM, INCLUDING CATEGORIES OF USERS AND THE PURPOSES OF SUCH USES:

Information may be disclosed to the appropriate governmental agency charged with the responsibility of administering law or investigating or prosecuting violations of law or charged with enforcing or implementing a statute, rule, regulation, order or license.

POLICIES AND PRACTICES FOR STORING, RETRIEVING, ACCESSING, RETAINING AND DISPOSING OF RECORDS IN THE SYSTEM:

STORAGE:

Records are maintained in paper files and magnetic media.

RETRIEVABILITY:

Records are filed by name of individual.

SAFEGUARD:

Paper records are maintained in file folders in secured areas. Access is limited to personnel whose official duties require such access and who have a need to know the information in a record for a particular job-related purpose. Access to computerized records is limited, through use of a password, to those whose official duties require access.

RETENTION AND DISPOSAL:

Records are being retained and disposed of in accordance with appropriate National Archives and Records Administration General Records Schedule.

SYSTEM MANAGER(S) AND ADDRESS:

Director Budget Division, See ''System Location'' for address.

NOTIFICATION PROCEDURE:

Individuals wishing to be notified if they are named in this system or gain access to records maintained in this system must submit a request containing the following elements:

(1) Identify the record system;

(2) Identify the category and type of records sought; and

(3) Provide at least two items of secondary identification (date of birth, employee identification number, dates of employment or similar information). Address inquiries to Chief, Disclosure Branch, Office of Thrift Supervision, 1700 G Street, NW., Washington, DC 20552.

RECORD ACCESS PROCEDURES:

See ''Notification Procedure'' above.

CONTESTING RECORD PROCEDURES:

See ''Notification Procedure'' above.

RECORD SOURCE CATEGORIES:

Personnel records.

EXEMPTIONS CLAIMED FOR THE SYSTEM:

None.

Treasury/OTS .012

SYSTEM NAME:

Payroll/Personnel System & Payroll Records.

SYSTEM LOCATIONS:

Office of Thrift Supervision, Department of the Treasury, 1700 G Street NW., Washington, DC 20552.

See Appendix A for appropriate local address of OTS Regional Offices.

CATEGORIES OF INDIVIDUALS COVERED BY THE SYSTEM:

All current Office of Thrift Supervision (OTS) employees and all former employees of the OTS, within the past three years.

CATEGORIES OF RECORDS IN THE SYSTEM

Information pertaining to:

(1) employee status, grade, salary, pay plan, hours worked, hours of leave taken and earned, hourly rate, gross pay, taxes, deductions, net pay, location, and payroll history;

(2) employee's residence, office, social security number, and address;

(3) Personnel actions (SF–50), State employees' withholding exemption certificates, Federal employees' withholding allowance certificates (W4), Bond Allotment File (SF–1192), Federal Employee's Group Life Insurance (SF–2810 & 2811), Savings Allotment-Financial Institutions, Address File (OTS Form 108), Union Dues Allotment, time and attendance reports, individual retirement records (SF–2806), Combined Federal Campaign allotment, direct deposit, health benefits, and thrift investment elections to either the Federal Thrift Savings Plan (TSP–1) or OTS' Financial Institutions Savings Plan (FITP–107 and K 1–2).

AUTHORITY FOR MAINTENANCE OF THE SYSTEM:

5 U.S.C. 301, 44 U.S.C. 3101.

PURPOSE(S):

Provides all the key personnel and payroll data for each employee which is required for a variety of payroll and personnel functions.

ROUTINE USES OF RECORDS MAINTAINED IN THE SYSTEM, INCLUDING CATEGORIES OF USERS AND THE PURPOSES OF SUCH USES:

(1) In the event that records maintained in this system of records indicate a violation or potential violation of law, whether civil, criminal or regulatory in nature, and whether arising by general statute or particular program statute, or by regulation, rule or order pursuant thereto, the relevant records in the system of records may be referred, as a routine use, to the appropriate agency, whether Federal, state, local, or foreign, charged with the responsibility of implementing the statute, or rule or regulation or order issued pursuant thereto;

(2) records from this system may be disclosed as a routine use to other Federal agencies including the Office of Personnel Management if necessary for or regarding the payment of salaries and expenses incident to employment at the Office of Thrift Supervision or other Federal employment, or the vesting, computation, and payment of retirement or disability benefits;

(3) records from this system may be necessary to support the assessment, computation, and collection of Federal, state, and local taxes, in accordance with established procedures;

(4) disclosure of information may be made to a Congressional office in response to an inquiry made at the request of the individual to whom the record pertains.

POLICIES AND PRACTICES FOR STORING, RETRIEVING, ACCESSING, RETAINING, AND DISPOSING OF RECORDS IN THE SYSTEM:

STORAGE:

Records are maintained on magnetic media, microfiche, and in paper files.

RETRIEVABILITY:

Records are filed by individual name, social security number and by office.

SAFEGUARDS:

Paper and microfiche records are maintained in secured offices and access is limited to personnel whose official duties require such access and

who have a need to know the information in a record for particular job-related purpose. Access to computerized records is limited, through the use of a password, to those whose official duties require access.

RETENTION AND DISPOSAL:

Records are retained and disposed of in accordance with appropriate National Archives and Records Administration General Records Schedules.

SYSTEM MANAGER(S) AND ADDRESS:

Director, Human Resources. See ''System Location'' for address.

NOTIFICATION PROCEDURE:

Individuals wishing to be notified if they are named in this system or gain access to records maintained in this system must submit a request containing the following elements:

(1) Identify the records;

(2) Identify the category and type of records sought; and

(3) Provide at least two items of secondary identification (date of birth, employee identification number, dates of employment or similar information). Address inquiries to Chief, Disclosure Branch, Office of Thrift Supervision, 1700 G Street NW., Washington, DC 20552.

RECORD ACCESS PROCEDURES:

See ''Notification Procedure'' above.

CONTESTING RECORD PROCEDURES:

See ''Notification Procedure'' above.

RECORD SOURCE CATEGORIES:

Personnel and payroll records of current and former employees.

EXEMPTIONS CLAIMED FOR THE SYSTEM:

None.

Treasury/OTS .013

SYSTEM NAME:

Personnel Security and Suitability Program.

SYSTEM LOCATION:

Office of Thrift Supervision, Department of the Treasury, 1700 G Street, NW., Washington, DC 20552.

CATEGORIES OF INDIVIDUALS COVERED BY THE SYSTEM:

Current and former government employees and applicants applying for employment with the Office of Thrift Supervision.

CATEGORIES OF RECORDS IN THE SYSTEM:

Background investigations, limited background investigations, minimal background investigations, national agency check investigations, periodic re-investigations, and FBI and other agency name checks, investigative information relating to personnel investigations conducted by the Department of the Treasury, the Office of Personnel Management, and other Federal agencies and departments on preplacement and postplacement basis to make suitability for employment determinations and for granting security clearances. Card records, automated data systems, or logs comprised of notices of personnel security and suitability investigations reflecting identification data on incumbents and former employees, and record type of E.O. 10450 investigations and degree and date of security clearance, if any.

AUTHORITY FOR MAINTENANCE OF THE SYSTEM:

Executive Order 10450, sections 2 and 3, Executive Order 12356, part 4, Executive Order 10577, 5 USC 3301, and 5 CFR parts 731, 732 and 736.

PURPOSE(S):

The purpose of the records in the Personnel Security and Suitability System is to enable the OTS to determine and document each employee's suitability or security risk for selection, employment and continued employment according to appropriate Federal regulations.

ROUTINE USES OF RECORDS MAINTAINED IN THE SYSTEM, INCLUDING CATEGORIES OF USERS AND THE PURPOSES OF SUCH USES:

These records and information in these records may be disclosed to departmental and agency officials or other Federal agencies as relevant to or necessary for making suitability or employability retention or security clearance determinations.

POLICIES AND PRACTICES FOR STORING, RETRIEVING, ACCESSING, RETAINING, AND DISPOSING OF RECORDS IN THE SYSTEM:

STORAGE:

File folders, logs and index cards.

RETRIEVABILITY:

Records are retrieved by name.

SAFEGUARDS:

Records are stored in locked metal containers and in locked rooms. They are limited to officials who have a need to know in the performance of their official duties. Officials are required to sign an access form.

RETENTION AND DISPOSAL:

Records are retained and disposed of in accordance with the appropriate National Archives and Records Administration General Records Schedules.

SYSTEM MANAGER(S) AND ADDRESS:

Director, Human Resources Division. See ''System Location'' for address.

NOTIFICATION PROCEDURE:

Individuals wishing to be notified if they are named in this system or gain access to records maintained in this system must submit a request containing the following elements:

(1) Identify the record system;

(2) Identify the category and type of records sought; and

(3) Provide at least two items of secondary identification (date of birth, employee identification number, dates of employment or similar information). Address inquiries to Chief, Disclosure Branch, Office of Thrift Supervision, 1700 G Street, NW, Washington, DC 20552.

RECORD ACCESS PROCEDURES:

See ''Notification Procedure'' above.

CONTESTING RECORD PROCEDURES:

See ''Notification Procedure'' above.

RECORD SOURCE CATEGORIES:

Information is obtained from current and former employees, coworkers, neighbors, acquaintances, educational records and instructors, and police and credit record checks.

EXEMPTIONS CLAIMED FOR THE SYSTEM:

None.

Appendix A—Addresses of Office of Thrift Supervision Regional Offices:

Northeast Region

10 Exchange Place Centre, 18th Floor, Jersey City, New Jersey 07302

Southeast Region

1475 Peachtree Street, NE., Atlanta, Georgia 30309

Central Region

111 East Wacker Drive, Suite 800, Chicago, Illinois 60601

Midwest Region

122 W. John Carpenter Freeway, Suite 600, Irving, Texas 75039

West Region

One Montgomery Street, Suite 400, San Francisco, California 94104

[FR Doc. 95–6166 Filed 3–13–95; 8:45 am]

BILLING CODE 6720–01–M

Sunshine Act Meetings

Federal Register
Vol. 60, No. 49
Tuesday, March 14, 1995

This section of the FEDERAL REGISTER contains notices of meetings published under the ''Government in the Sunshine Act'' (Pub. L. 94-409) 5 U.S.C. 552b(e)(3).

FEDERAL DEPOSIT INSURANCE CORPORATION

Notice of Agency Meeting

Pursuant to the provisions of the ''Government in the Sunshine Act'' (5 U.S.C. 552b), notice is hereby given that the Federal Deposit Insurance Corporation's Board of Directors will meet in open session at 9:00 a.m. on Friday, March 17, 1995, to conduct a public hearing, and to consider testimony, on the Corporation's proposals to amend the assessment rate schedule for members of the Bank Insurance Fund while retaining the existing assessment rate schedule applicable to members of the Savings Association Insurance Fund.

The meeting will be held in the Board Room on the sixth floor of the FDIC Building located at 550—17th Street, NW., Washington, DC.

The FDIC will provide attendees with auxiliary aids (e.g., sign language interpretation) required for this meeting. Those attendees needing such assistance should call (202) 942–3132 (Voice); (202) 942–3111 (TTY), to make necessary arrangements.

Requests for further information concerning the meeting may be directed to Mr. Robert E. Feldman, Acting Executive Secretary of the Corporation, at (202) 898–6757.

Dated: March 10, 1995.

Federal Deposit Insurance Corporation.

Robert E. Feldman,

Acting Executive Secretary.

[FR Doc. 95–6433 Filed 3–10–95; 8:45 am]

BILLING CODE 6714–01–M

INTERSTATE COMMERCE COMMISSION

Commission Conference

TIME AND DATE: 10:00 a.m., March 21, 1995.

PLACE: Hearing Room A, Interstate Commerce Commission, 12th and Constitution Avenue, NW., Washington, DC 20423.

STATUS: The Commission will meet to discuss among themselves the following agenda items. Although the conference is open for the public observation, no public participation is permitted.

MATTERS TO BE DISCUSSED:

Finance Docket No. 32518, *The Phillips Company—Petition For Declaratory Order.*

Finance Docket No. 32479, *Caddo Antoine and Little Missouri Railroad Company—Feeder Line Acquisition—Arkansas Midland Railroad Company Line Between Gurdon and Birds Mill, AR.*

Ex Parte No. 511, *Petition for Rulemaking—Protection of Surveying Benchmarks in Railroad Abandonments.*

Finance Docket No. 31922 (Sub-No. 1), *Wisconsin Central Ltd.—Purchase Exemption—Soo Line Railroad Company Line Between Superior and Ladysmith, WI (Arbitration Review).*

CONTACT PERSONS FOR MORE INFORMATION: Alvin H. Brown or A. Dennis Watson, Office of External Affairs, Telephone: (202) 927–5350, TDD: (202) 927–5721.

Vernon A. Williams,

Secretary.

[FR Doc. 95–6374 Filed 3–10–95; 3:17 pm]

BILLING CODE 7035–01–P

NATIONAL TRANSPORTATION SAFETY BOARD

TIME AND PLACE: 9:30 a.m., Tuesday, March 21, 1995.

PLACE: The Board Room, 5th Floor, 490 L'Enfant Plaza, SW., Washington, DC 20594.

STATUS: Open.

MATTERS TO BE CONSIDERED:

6420A Railroad Accident Report: Collision and Derailment of Amtrak Train 87 With An Intermodal Trailer Carried on CSXT Train 176 at Selma, North Carolina, May 16, 1994

6503A Briefs of Aviation Accidents: Two Briefs Previously Sent to the Board for Approval—Talladega, Alabama and Hohenwald, Tennessee

NEWS MEDIA CONTACT: Telephone: (202) 382–0660.

FOR MORE INFORMATION CONTACT: Bea Hardesty, (202) 382–6525.

Dated: March 10, 1995.

Bea Hardesty,

Federal Register Liaison Officer.

[FR Doc. 95–6324 Filed 3–10–95; 10:01 am]

BILLING CODE 7533–01–P

NEIGHBORHOOD REINVESTMENT CORPORATION

Regular Meeting of the Board of Directors

TIME AND DATE: 2:00 p.m., Friday, March 17, 1995.

PLACE: Neighborhood Reinvestment Corporation, 1325 G Street, N.W., Suite 800, Board Room, Washington, D.C. 20005.

STATUS: Open.

CONTACT PERSON FOR MORE INFORMATION: Jeffrey T. Bryson, General Counsel/Secretary 202/376–2441.

Agenda

I. Call to Order
II. Approval of Minutes:
  December 16, 1994
III. Audit Committee Report:
  February 22, 1995, Meeting
  a. Receive FY 1994 Audit Report from Outside Auditors
  b. Selection of Outside Auditors
  c. Proposed Revisions to the Corporate Investment Policy
IV. Budget Committee Report:
  February 23, 1995, Meeting
  a. Proposed FY 1995 Budget Revisions
V. Treasurer's Report
VI. Executive Director's Quarterly Management Report
VII. Adjourn

Veronica D. Dean

Assistant Secretary/Paralegal.

[FR Doc. 95–6325 Filed 3–10–95; 10:01 am]

BILLING CODE 7570–01–M

NUCLEAR REGULATORY COMMISSION

DATE: Weeks of March 13, 20, 27, and April 3, 1995.

PLACE: Commissioners' Conference Room, 11555 Rockville Pike, Rockville, Maryland.

STATUS: Public and Closed.

MATTERS TO BE CONSIDERED:

Week of March 13

Tuesday, March 14

11:00 a.m.
  Briefing on Investigative Matters (Closed—Ex. 5 and 7)

Wednesday, March 15

2:00 p.m.
  Briefing on Proposed Changes to NRC Fee Rule (Public Meeting)
  (Contact: Jesse Funches, 301–415–7322)
3:30 p.m.
  Affirmation/Discussion and Vote (Public Meeting) (if needed)

Week of March 20—Tentative

Wednesday, March 22

10:00 a.m.
Briefing on Status of Action Plan for Fuel Cycle Facilities (Public Meeting)
(Contact: John Hickey, 301–415–7192)
11:30 a.m.
Affirmation/Discussion and Vote (Public Meeting) (if needed)

Week of March 27—Tentative

Tuesday, March 28

2:00 p.m.
Briefing on Status of Reactor Regulatory Reform Initiatives (Public Meeting)
(Contact: Gene Imbro, 301–415–2969)

Wednesday, March 29

10:00 a.m.
Briefing by National Academy of Sciences on Status of Independent Review of Medical Use Program (Public Meeting)
(Contact: Pat Rathbun, 301–415–7178)
2:00 p.m.
Briefing on Lessons Learned from Enhanced Participatory Rulemakings (Public Meeting)
(Contact: Chip Cameron, 301–415–1642)
3:30 p.m.
Affirmation/Discussion and Vote (Public Meeting) (if needed)

Friday, March 31

10:00 a.m.
Briefing by IG and Staff Concerning Audit of HLW Licensing Support System (LSS) (Public Meeting)
(Contact: Moe Levin, 301–415–7458)

Week of April 3—Tentative

Wednesday, April 5

10:00 a.m.
Briefing on PRA Implementation Plan (Public Meeting)
(Contact: Edward Butcher, 301–415–3183)
11:30 a.m.
Affirmation/Discussion and Vote (Public Meeting) (if needed)

ADDITIONAL INFORMATION: By a vote of 3–0 on March 8, the Commission determined pursuant to U.S.C. 552b(e) and § 9.107(a) of the Commission's rules that ''Discussion of Management and Personnel Matters'' (CLOSED—Ex. 2 and 6) be held on March 8, and on less than one week's notice to the public.

By a vote of 3–0 on March 9, the Commission determined pursuant to U.S.C. 552b(e) and § 9.107(a) of the Commission's rules that ''Affirmation of Sequoyah Fuels Corporation—Intervenor's Petition for Review of the Presiding Officer's Order LBP–93–25'' (Public Meeting) be held on March 9, and on less than one week's notice to the public.

Note: Affirmation sessions are initially scheduled and announced to the public on a time-reserved basis. Supplementary notice is provided in accordance with the Sunshine Act as specific items are identified and added to the meeting agenda. If there is no specific subject listed for affirmation, this means that no item has as yet been identified as requiring any Commission vote on this date.

The schedule for Commission meetings is subject to change on short notice. To verify the status of meetings call (Recording)—(301) 415–1292:

CONTACT PERSON FOR MORE INFORMATION: William Hill (301) 415–1661.

This notice is distributed by mail to several hundred subscribers; if you no longer wish to receive it, or would like to be added to it, please contact the Office of the Secretary, Attn: Operations Branch, Washington, DC 20555 (301–415–1963).

In addition, distribution of this meeting notice over the internet system will also become available in the near future. If you are interested in receiving this Commission meeting schedule electronically, please send an electronic message to alb@nrc.gov or gkt@nrc.gov.

Dated: March 9, 1995.

William M. Hill, Jr.,

SECY Tracking Officer, Office of the Secretary.

[FR Doc. 95–6390 Filed 3–10–95; 3:17 pm]

BILLING CODE 7590–01–M

Corrections

Federal Register

Vol. 60, No. 49

Tuesday, March 14, 1995

This section of the FEDERAL REGISTER contains editorial corrections of previously published Presidential, Rule, Proposed Rule, and Notice documents. These corrections are prepared by the Office of the Federal Register. Agency prepared corrections are issued as signed documents and appear in the appropriate document categories elsewhere in the issue.

DEPARTMENT OF AGRICULTURE

Agricultural Marketing Service

7 CFR Part 56

[Docket No. PY–92–004]

RIN 0581–AA60

Voluntary Shell Egg Grading

Correction

In rule document 95–5543 beginning on page 12401 in the issue of Tuesday, March 7, 1995, make the following correction:

On page 12403, the table is corrected to read as follows:

§56.231 [Corrected]

	Nest-run grade, description [1]	U.S. nest-run ____ percent AA quality [2]
Minimum percentage of quality required (lot average) [3]	AA quality [4]	20
	A quality or better [5]	85
Maximum percentage tolerance permitted (15 percent lot average) [3]	B quality for shell shape, pronounced ridges or thin spots, interior quality (including blood & meat spots) or cage marks [6] and blood stains	10
	Checks	6
	Loss	3
	Adhering dirt or foreign material ½ inch or larger in diameter	5

[1] Stains (other than rusty or blackish appearing cage marks or blood stains), and adhering dirt and foreign material on the shell less than ½ inch in diameter shall not be considered as quality factors in determining the grade designation.
[2] The actual total percentage must be stated in the grade name.
[3] Substitution of eggs of higher qualities for lower specified qualities is permitted.
[4] No case may contain less than 10 percent AA quality.
[5] No case may contain less than 75 percent A quality and AA quality eggs in any combination.
[6] Cage marks which are rusty or blackish in appearance shall be considered as quality factors. Marks which are slightly gray in appearance are not considered as quality factors.

BILLING CODE 1505–01–D

DEPARTMENT OF COMMERCE

National Oceanic and Atmospheric Administration

50 CFR Parts 611, 675, and 676

[Docket No. 950206040–5040–01; I.D. 111494A]

Groundfish Fishery of the Bering Sea and Aleutian Islands; Foreign Fishing; Limited Access Management of Federal Fisheries In and Off of Alaska; Final 1995 Harvest Specifications of Groundfish

Correction

In rule document 95–3485 beginning on page 8479, in the issue of Tuesday, February 14, 1995, make the following corrections:

1.On page 8481, in the first column, in the first paragraph, after the word ''below'' insert a period.

2.On the same page, in the 2nd column, in the 21st line from the top, after the word ''specifications'' insert ''(Table 1)''.

3.On page 8482, in the third column, in the table, under the heading entitled ''Roe season[4]'', in the eighth line, ''552 ([6])'' should read ''552''.

4.On page 8484, in the third column, in the first paragraph, in the first line from the bottom, after the word ''mortality'' insert a period.

BILLING CODE 1505–01–D

DEPARTMENT OF DEFENSE

Office of the Secretary

Proposed Changes to U.S. Court of Appeals for the Armed Forces Rles

Correction

In notice document 95–1879 beginning on page 4893 in the issue of Wednesday, January 25, 1995, make the following correction:

On page 4895, in the first column, under **DATES**, in the last line, ''February 24, 1995.'' should read ''March 27, 1995.''.

BILLING CODE 1505–01–D

federal register

Tuesday
March 14, 1995

Part II

Department of Labor

Occupational Safety and Health Administration

29 CFR Part 1910, et al.

Powered Industrial Truck Operator Training; Proposed Rule

DEPARTMENT OF LABOR

Occupational Safety and Health Administration

29 CFR Parts 1910, 1915, 1917, and 1918

[Docket No. S–008]

Powered Industrial Truck Operator Training

AGENCY: Occupational Safety and Health Administration, Labor.

ACTION: Proposed rule.

SUMMARY: The Occupational Safety and Health Administration (OSHA) is proposing to revise the general industry safety standard for training powered industrial truck operators and to add equivalent training requirements for the maritime industries. The existing standard in part 1910 requires that only trained operators who are authorized to do so can operate powered industrial trucks and that methods of training be devised. The proposed training requirements would mandate the development of a training program that would base the amount, type, degree, and sufficiency of training on the knowledge of the trainee and the ability of the vehicle operator to acquire, retain, and use the knowledge and the skills and abilities that are necessary to safely operate the truck. A periodic evaluation of each operator's performance would be required. Refresher or remedial training also would be required, based primarily on unsafe operation, an accident or near miss, or deficiencies found in a periodic evaluation of the operator.

DATES: Written comments and requests for a hearing on this proposed rule must be postmarked by July 12, 1995.

ADDRESSES: Comments, information, and hearing requests should be sent in quadruplicate to: Docket Office, Docket No. S–008; Room N2624; U.S. Department of Labor, Occupational Safety and Health Administration; 200 Constitution Avenue NW; Washington, DC 20210 (202–219–7894).

FOR FURTHER INFORMATION CONTACT: Mr. Richard P. Liblong, Office of Information and Consumer Affairs, U.S. Department of Labor, Occupational Safety and Health Administration, Room N3641; 200 Constitution Avenue NW; Washington, DC 20210 (202–219–8148).

SUPPLEMENTARY INFORMATION:

I. Background

a. The General Industry Standard

On May 29, 1971 (36 FR 10466), OSHA adopted some of the existing Federal standards and national consensus standards as OSHA standards under the procedures described in section 6(a) of the Occupational Safety and Health Act (OSH Act) (29 U.S.C. 655, et.al.). Section 6(a) permitted OSHA to adopt, without rulemaking, within 2 years of the effective date of the Act, any established Federal standard or national consensus standard.

One of the consensus standards that was adopted under the 6(a) procedure was the American National Standards Institute (ANSI) B56.1–1969 Safety Standard for Powered Industrial Trucks. Among the provisions adopted from that standard was the operator training requirement codified at 29 CFR 1910.178(l), which states:

> Only trained and authorized operators shall be permitted to operate a powered industrial truck. Methods of training shall be devised to train operators in the safe operation of powered industrial trucks.

In that consensus standard, a powered industrial truck is defined as a mobile, power-driven vehicle used to carry, push, pull, lift, stack, or tier material. One truck may be known by several different names. Included are vehicles that are commonly referred to as high lift trucks, counterbalanced trucks, cantilever trucks, rider trucks, forklift trucks; high lift trucks, high lift platform trucks; low lift trucks, low lift platform trucks; motorized hand trucks, pallet trucks; narrow aisle rider trucks, straddle trucks; reach rider trucks; single side loader rider trucks; high lift order picker rider trucks; motorized hand/rider trucks; or counterbalanced front/side loader lift trucks. Excluded from the scope of the OSHA standard are vehicles used for earth moving or over-the-road haulage.

b. The Maritime Safety Standards

In 1958, Congress amended the Longshoremen's and Harbor Workers' Compensation Act (LHWCA) (44 Stat. 1424; 33 U.S.C. 901 et seq.) to provide maritime employees with a safe work environment. The amendments (Pub. L. 85–742, 72 Stat. 835) required employers covered by the LHWCA to ''furnish, maintain and use'' equipment and to establish safe working conditions in accordance with regulations promulgated by the Secretary of Labor. Two years later, the Labor Standards Bureau (LSB) issued the first set of safety and health regulations for longshoring activities as 29 CFR part 9 (25 FR 1565, February 20, 1960). These regulations only covered longshoring activities taking place aboard vessels.

Passage of the OSH Act (84 Stat. 1590; 29 U.S.C. 650 et seq.) authorized the Secretary of Labor to adopt established Federal standards issued under other statutes, including the LHWCA, as occupational safety and health standards under the OSH Act. Accordingly, the Secretary adopted the existing shipyard employment and longshoring regulations and recodified these rules as 29 CFR parts 1915 and 1918 (39 FR 22074, June 19, 1974). Since the OSH Act comprehensively covered all private employment, the longshoring standards also applied to shoreside cargo-handling operations. (See 29 CFR 1910.16.) The requirements for the use of mechanically powered vehicles used aboard vessels were codified at § 1918.73. These provisions did not include a requirement for the training of vehicle operators.

In addition, in accordance with established policy codified at 29 CFR 1910.5(c)(2), OSHA has applied its general industry regulations to shoreside activities not covered by its older longshoring rules. Citations also have been issued under section 5(a)(1) (the General Duty Clause) of the OSH Act (84 Stat. 1593; 29 U.S.C. 654), since some serious hazards are not addressed by the requirements of part 1910, 1915, or 1918.

On July 5, 1983 (48 FR 30886), OSHA published its final standard for Marine Terminals. These rules were intended to address the shoreside segment of marine cargo handling. Section 1917.27 Personnel required that:

> (a) *Qualifications of machinery operators.*
>
> (1) Only those employees determined by the employer to be competent by reason of training or experience, and who understand the signs, notices and operating instructions and are familiar with the signal code in use shall be permitted to operate a crane, winch or other power operated cargo handling apparatus, or any power operated vehicle, or give signals to the operator of any hoisting apparatus.
>
> Exception: Employees being trained and supervised by a designated person may operate such machinery and give signals to operators during training.
>
> (2) No employee known to have defective uncorrected eyesight or hearing, or to be suffering from heart disease, epilepsy, or other ailments which may suddenly incapacitate him shall be permitted to operate a crane, winch or other power-operated cargo handling apparatus or a power-operated vehicle.

The Marine Terminal Standards also had requirements for powered industrial

trucks at § 1917.43 Powered industrial trucks. However, these requirements were for the operation, maintenance and outfitting of those vehicles and did not expand upon the training requirements found at § 1917.27.

On June 2, 1994, OSHA published in the **Federal Register** (59 FR 28594) a Notice of Proposed Rulemaking (NPRM) for the revision of the longshoring and marine terminals standards.

That NPRM did not propose to amend significantly the aforementioned training requirements of § 1917.27 or to incorporate a training requirement for longshoring (on-board vessel) operations.

c. Updated Consensus Standard

Since promulgation of the OSHA standards, the consensus standard (ANSI B56.1) has undergone four complete revisions (dated 1975, 1983, 1988 and 1993). The current consensus standard (Ex. 3–1) states:

4.18 Operator qualifications.

Only trained and authorized persons shall be permitted to operate a powered industrial truck. Operators of powered industrial trucks shall be qualified as to visual, auditory, physical, and mental ability to operate the equipment safely according to 4.19 and all other applicable parts of Section 4.

4.19 Operator training.

4.19.1 Personnel who have not been trained to operate powered industrial trucks may operate a truck for the purposes of training only, and only under the direct supervision of the trainer. This training should be conducted in an area away from other trucks, obstacles, and pedestrians.

4.19.2 The operator training program should include the user's policies for the site where the trainee will operate the truck, the operating conditions for that location, and the specific truck the trainee will operate. The training program shall be presented to all new operators regardless of previous experience.

4.19.3 The training program shall inform the trainee that:

(a) The primary responsibility of the operator is to use the powered industrial truck safely following the instructions given in the training program.

(b) Unsafe or improper operation of a powered industrial truck can result in: death or serious injury to the operator or others; damage to the powered industrial truck or other property.

4.19.4 The training program shall emphasize safe and proper operation to avoid injury to the operator and others and prevent property damage, and shall cover the following areas:

(a) Fundamentals of the powered industrial truck(s) the trainee will operate, including:

(1) characteristics of the powered industrial truck(s), including variations between trucks in the workplace;

(2) similarities to and differences from automobiles:

(3) significance of nameplate data, including rated capacity, warnings, and instructions affixed to the truck;

(4) operating instructions and warnings in the operating manual for the truck, and instructions for inspection and maintenance to be performed by the operator;

(5) type of motive power and its characteristics;

(6) method of steering;

(7) braking method and characteristics, with and without load;

(8) visibility, with and without load, forward and reverse;

(9) load handling capacity, weight and load center.

(10) stability characteristics with and without load, with and without attachments;

(11) controls-location, function, method of operation, identification of symbols;

(12) load handling capabilities; forks, attachments;

(13) fueling and battery charging;

(14) guards and protective devices for the specific type of truck;

(15) other characteristics of the specific industrial truck.

(b) Operating environment and its effect on truck operation, including:

(1) floor or ground conditions including temporary conditions;

(2) ramps and inclines, with and without load;

(3) trailers, railcars, and dockboards (including the use of wheel chocks, jacks, and other securing devices;

(4) fueling and battery charging facilities;

(5) the use of ''classified'' trucks in areas classified as hazardous due to risk of fire or explosion, as defined in ANSI/NFPA 505;

(6) narrow aisles, doorways, overhead wires and piping, and other areas of limited clearance;

(7) areas where the truck may be operated near other powered industrial trucks, other vehicles, or pedestrians;

(8) use and capacity of elevators;

(9) operation near edge of dock or edge of improved surface;

(10) other special operating conditions and hazards which may be encountered.

(c) Operation of the powered industrial truck, including:

(1) proper preshift inspection and approved method for removing from service a truck which is in need of repair;

(2) load handling techniques, lifting, lowering, picking up, placing, tilting;

(3) traveling, with and without loads; turning corners;

(4) parking and shutdown procedures;

(5) other special operating conditions for the specific application.

(d) Operating safety rules and practices, including:

(1) provisions of this Standard in Sections 5.1 to 5.4 address operating safety rules and practices;

(2) provisions of this Standard in Section 5.5 address care of the truck;

(3) other rules, regulations, or practices specified by the employer at the location where the powered industrial truck will be used.

(e) Operational training practice, including;

(1) if feasible, practice in the operation of powered industrial trucks shall be conducted in an area separate from other workplace activities and personnel;

(2) training practice shall be conducted under the supervision of the trainer;

(3) training practice shall include the actual operation or simulated performance of all operating tasks such as load handling, maneuvering, traveling, stopping, starting, and other activities under the conditions which will be encountered in the use of the truck.

4.19.5 Testing, Retraining, and Enforcement.

(a) During training, performance and oral and/or written tests shall be given by the employer to measure the skill and knowledge of the operator in meeting the requirements of the Standard. Employers shall establish a pass/fail requirement for such tests. Employers may delegate such testing to others but shall remain responsible for the testing. Appropriate records shall be kept.

(b) Operators shall be retrained when new equipment is introduced, existing equipment is modified, operating conditions change, or an operator's performance is unsatisfactory.

(c) The user shall be responsible for enforcing the safe use of the powered industrial truck according to the provisions of this Standard.

Note: Information on operator training is available from such sources as powered industrial truck manufacturers, government agencies dealing with employee safety, trade organizations of users of powered industrial trucks, public and private organizations, and safety consultants.

(For an explanation of why OSHA decided to propose a somewhat different standard, see section entitled Summary and Explanation of the Proposed Standard, below.)

Since 1971, the consensus committee has adopted other volumes for additional types of vehicles that fall within the broad definition of a powered industrial truck. Specifically, requirements have been adopted for guided industrial vehicles, rough terrain forklift trucks, industrial crane trucks, personnel and burden carriers, operator controlled industrial tow tractors, and manually propelled high lift industrial trucks. This rulemaking would adopt training requirements for all types of powered industrial trucks regardless of their usage and the industry in which they are operating.

d. Petitions and Requests

On March 15, 1988, the Industrial Truck Association (ITA) petitioned OSHA to revise its standard requiring the training of powered industrial truck operators (Ex. 3–2). The petition contained suggested language for a proposed requirement along with a model operator training program by which compliance with the recommended requirement could be met. OSHA responded to the petition on April 8, 1988, stating that work on the

revision of the OSHA powered industrial truck operator training requirement would begin as soon as other priority projects were completed.

In addition to the petition, other interested persons have frequently asked questions about training operators of powered industrial trucks, such as:

- What constitutes the necessary and sufficient training of forklift operators?
- How can one ensure that all forklift operators have been trained?
- What testing, if any, should be conducted as part of the training?
- Should the prior experience of a newly hired employee be considered as fulfilling part or all of the training requirement or totally fulfilling the employer's obligation to train that employee?

Some interested persons have suggested that OSHA develop a standardized training course or at least review and comment on or endorse various training courses, programs, agenda, or outlines. Others have suggested that OSHA license or certify all powered industrial truck operators to attest to their ability to properly operate powered industrial trucks. These concerns also were considered in the development of the proposed rulemaking. OSHA is proposing to amend the current powered industrial truck operator training requirements for general industry and to adopt the same requirement for the maritime industries.

e. Reasons for the Proposal

As discussed in the benefits discussed below and in the Regulatory Impact Analysis, powered industrial truck accidents cause approximately 85 fatalities and 34,900 serious injuries each year. It is estimated that approximately 20 to 25 percent are at least in part caused by inadequate training.

As just discussed, the ITA and others have requested that OSHA improve its training requirement for powered industrial truck operators. ANSI has substantially upgraded its recommended training requirements. OSHA preliminarily concludes that upgrading the training requirements for powered industrial truck operators will substantially reduce a significant risk of death and injury from untrained operators driving powered industrial trucks.

II. The Powered Industrial Truck

The term powered industrial truck is defined in the American Society of Mechanical Engineers, ASME B56.1 (formerly the ANSI B56.1 standard) as a ''mobile, power propelled truck used to carry, push, pull, lift, stack, or tier material.''

There are presently approximately 822,830 powered industrial trucks in use in American industry. This number was generated using the available information on truck shipments of powered industrial trucks and the percentage of market that ITA members control. This information was provided OSHA by the Industrial Truck Association.

The Industrial Truck Association stated in conversations with OSHA representatives that it considers the average useful life of a powered industrial truck to be 8 years. The 8-year life cycle has been used throughout the preparation of this proposed rule and in the formulation of the Preliminary Regulatory Impact Analysis. The vehicle manufacturers also estimate that there are, on average, 1.5 operators for each industrial truck. A search of the available literature indicates that this number has not been disputed. OSHA believes that this number is a fair assessment of the number of powered industrial operators since many employers (particularly small employers) have one operator per truck and the vehicle is used only during one shift per day whereas other vehicles are used by multiple operators during multiple shifts.

Powered industrial trucks are classified by the manufacturers according to their individual characters.

There are seven classes of powered industrial trucks:

Class 1—Electric Motor, Sit-down Rider, Counter-Balanced Trucks (Solid and Pneumatic Tires).

Class 2—Electric Motor Narrow Aisle Trucks (Solid Tire).

Class 3—Electric Motor Hand Trucks or Hand/Rider Trucks (Solid Tires).

Class 4—Internal Combustion Engine Trucks (Solid Tires).

Class 5—Internal Combustion Engine Trucks (Pneumatic Tires).

Class 6—Electric and Internal Combustion Engine Tractors (Solid and Pneumatic Tires).

Class 7—Rough Terrain Fork Lift Trucks (Pneumatic Tires).

Each of these different types of powered industrial trucks has its own unique characteristics, and inherent hazards. To maximize the effectiveness of the training, it must be somewhat unique for each type vehicle. For example, an operator of a high lift rider truck must have an understanding of the basics of the vehicle's stability (including those factors which affect that stability), the need to not overload the vehicle, and the need to operate the vehicle according to established rules (such as not using the vehicle to elevate employees who are standing on its forks). On the other hand, order picker trucks elevate the operator along with a platform that is used to hold material destined for storage or retrieval from storage in high stacking racks or bins. The platforms on these trucks are not completely enclosed by railings, toe boards, or other similar fall protection devices to prevent an operator from falling off an elevated platform. To be protected, the operator must wear a body harness or belt with a lanyard affixed to the mast of the vehicle or the overhead guard. Therefore, training for employees who use order picker trucks must emphasize that the use of the body belt or harness and lanyard is essential whenever the operator is aloft.

Powered industrial trucks may be powered by gasoline, propane, diesel or liquified petroleum gas engines or by electric motors. Each of the basic powerplants (except propane) and their associated components (such as mufflers on internal combustion engines and switches and wiring on electric trucks) may be upgraded and the entire truck may be approved by a nationally recognized testing laboratory for operation in certain classified hazardous areas. These classified hazardous areas are those parts of a plant, factory or other workplace where there exists or may exist concentrations of flammable gases or vapors, combustible dust, or easily ignitible flyings or fibers so that the risk of fire or explosion is increased. The current OSHA general industry standard for powered industrial trucks contains basic descriptions of the types of approved powered industrial trucks and the various classes, divisions, and groups of classified hazardous areas and some of the materials whose presence would cause classification of those areas. However, the number of substances whose presence causes the hazards of fire and/or explosion have increased greatly since promulgation of the OSHA standards. (For additional information on the properties and classifications of materials, see the National Fire Protection Association (NFPA) 505–1992 Fire Safety Standard for Powered Industrial Trucks Including Type Designation, Areas of Use, Maintenance, and Operation.) (Ex. 3–3).

In addition to the general requirements for truck operation, such as vehicle stability and load carrying capability, training must be provided for unusual situations, such as training operators to handle asymmetrical loads when their work includes this activity. The only way that unusual loads may be moved safely with some powered

industrial trucks is for the operator to understand and apply the principles of moments and stability of the vehicle. (These principles are explained in more detail in the part of this preamble entitled ''Powered Industrial Truck Hazards.'') With many powered industrial trucks, the capacity is given as some weight at some load center [usually 24″ (61 cm)]. If the operator does not understand that the load center is the distance from the vertical face of the forks to the center of gravity of the load and that loads are usually symmetrical, then the operator may pick up a load incorrectly. If the operator understands that the capacity of the vehicle decreases as the load center increases, then some asymmetrical or off-center loads may be safely picked up and moved using a high lift truck. Other type trucks, such as low lift platform trucks, can handle asymmetrical or off-center loads with minimum danger to an employee because the load is not raised far above the ground. However, because these type trucks are unable to raise loads far above the ground, they are of little or no use when working in a workplace that has high stacking racks or bins where powered industrial trucks must be able to deposit and retrieve loads from considerable distances above the ground or floor.

Powered industrial trucks also are used to move large items or many smaller items about the workplace without the restrictions that generally exist with other mechanical material handling equipment. Other material handling equipment, like overhead cranes or conveyors, are restricted to moving material along a particular, predetermined pathway. A powered industrial truck, on the other hand, may operate along any aisleway or passageway provided it is wide enough to accommodate the vehicle and can support the vehicle and its load. Once one of these trucks has left an area, there is no remaining obstruction to the flow of employee or vehicular traffic, as would normally occur when fixed equipment is used.

Powered industrial trucks may be operated in and among employees with little or no inconvenience to the employees. Although it may be convenient to operate a powered industrial truck around employees, this can be dangerous, particularly when the employees may be hidden from view (for example, when they are working behind stored material.)

These trucks may operate on almost any type surface, from smooth and level floors to rocky, uneven ground, provided they were manufactured to operate on that type floor or ground and the surface does not have an excessive slope. Different type trucks are designed and manufactured to operate in various work environments. Not only may powered industrial trucks be used for moving material about the workplace, high lift trucks are used to raise loads up to 30 or 40 feet above the floor and deposit the material on a rack, mezzanine or other elevated location and then retrieve and lower the material. Many trucks were designed specifically to operate in restricted areas such as narrow aisles and passageways.

Because powered industrial trucks are intended to accomplish specific tasks in a particular manner, their use is restricted. For example, a powered industrial truck that was designed to operate in a restricted space (such as in a narrow aisle or passageway) must be manufactured with a narrow track (the distance between the two wheels on the same axle or at the same end of the vehicle). In many cases, the maximum width of a truck must be significantly less than the minimum width of the area in which it is operated since the vehicle will normally have to make turns so that loads may be deposited in and retrieved from racks or bins which are adjacent to the aisle or passageway. Narrow aisle trucks cannot be safely operated on a floor or the ground that is not smooth.

Another design criterion, the maximum lateral dimension of the vehicle, usually dictates where the various components of the vehicle, such as the engine or motor, the transmission and the seat for the operator, will be placed. The placement of these components may be higher or lower than their most desirable locations. The placement of the various components at a higher point of the vehicle than is desirable, which is the usual case, raises the center of gravity of the entire vehicle, thereby making the vehicle less stable. The greater the distance that the center of gravity of the vehicle and its load is above the ground, the less stable the vehicle (if all other factors remain constant). A more stable design of a powered industrial truck would require a wider track. This would allow installing the engine, transmission, and other components at a lower level of the truck, thereby lowering the center of gravity of the vehicle.

Because the powered industrial truck is a motor vehicle, its operation is similar to the automobile and some of its hazards are the same as those experienced during operation of the automobile. Like the automobile, the internal combustion engine powered industrial truck will move when the gas pedal depressed, and stop when the brake is applied. Some internal combustion engine and electric powered industrial trucks have both the accelerator and brake functions combined in one pedal or other controller providing restriction to movement of the vehicle when no pressure is applied to the pedal (or when the controller is in the neutral position). As pressure is applied to the pedal or other controller, the brake is gradually released, until at a given point of controller travel, the brake is completely disengaged. At this point, the vehicle can coast without restriction from the brake. Finally, as the pedal or other controller is actuated further, the motor or engine is engaged and the vehicle moves under the power supplied by the engine or motor. The vehicle then moves progressively faster as the pedal or controller is further actuated. Clearly good training is needed when design characteristics may reduce stability, limit vision or cause non-uniform methods of control.

Powered industrial trucks also may come equipped with, or can be modified to accept, attachments that allow movement of odd shaped materials or permit the truck to carry out tasks that may not have been envisioned when the truck was designed and manufactured. Many of these attachments may be added to or installed on the vehicle by the dealer or by the employer. For example, there are powered industrial truck attachments for grasping barrels or drums of material. Some of these attachments will not only grasp a barrel or drum but allow the vehicle operator to rotate the barrel or drum to empty the vessel or lay it on its side. Another attachment that looks like a long spike may be positioned within rolled material, such as carpeting. This attachment allows the movement of material without causing damage to the material being handled. All of these attachments may adversely effect the ability of a powered industrial truck to perform its primary function or may cause the vehicle to be used safely only under limited operating conditions, such as under reduced speed or load-carrying capacity. OSHA recognizes that certain attachments may limit the safe use of the vehicle. To ensure that modifications or additions do not adversely affect the safe use of the vehicle, OSHA requires at § 1910.178(b)(4) that:

(4) Modifications and additions which affect capacity and safe operation shall not be performed by the customer or user without the manufacturer's prior written approval. Capacity, operation, and maintenance instruction plates, tags, or decals shall be changed accordingly.

When the use of specialized attachments restricts the use of the powered industrial truck or when the truck is used to lift people, it is essential that operator training must include instruction on the safe use of the vehicle so that the operator knows and understands the restrictions or limitations that are imposed upon the operation of the vehicle by the utilization of those attachments.

Another type of attachment that alters the basic use of the vehicle and presents unique hazards is an overhead hoist attachment. It is made up of a rail (like an I-beam) that is attached to the truck and supports an overhead hoist. It is very easy for an operator to pick up a load with an overhead hoist attachment while the load is close to the vehicle and, without realizing it, exceed the moment of the vehicle by moving the load further from the body of the vehicle. In order to operate this type attachment successfully, the operator must have specific training in the use of this attachment, including training in calculating the maximum load at different points in front of the vehicle and instruction in the causes of longitudinal vehicle tipover and its prevention.

In an attempt to improve the load carrying capability of the vehicle, some people add extra counterweights to powered industrial trucks. Although this will increase the ability of the vehicle to resist longitudinal tipover when the vehicle is overloaded, additional weight imposes extra stresses on the vehicle and its components. The added stresses also can cause changes in the driving characteristics of the vehicle and premature failure of the truck and its components, sometimes with catastrophic effects. Training is needed so that operators avoid creating those hazards.

III. Powered Industrial Truck Hazards

Powered industrial trucks are used in all industries. Their principle utility lies in the fact that either a large number of objects confined in a large box, crate or other container or large objects may be moved about the workplace with relative ease. Since powered industrial truck movement is controlled by the operator and is not restricted by the frame of the machine or other impediments, virtually unrestricted movement of the vehicle about the workplace is possible.

The hazards that are commonly associated with powered industrial trucks may not exist or be as pronounced for every type, make or model vehicle. For example, the hazard of tipping over the vehicle due to unstable operation does not exist (except in the most extraordinary circumstance) with the low lift platform truck, the motorized hand truck or the motorized hand/rider truck because each of these trucks does not allow the raising of the load to a point that will cause the vehicle to become unstable. On the other hand, the counterbalanced rider truck and the order picker truck allow the load to be raised very high, causing the vehicle to become less stable as the load is raised.

Each type truck has different hazards associated with its operation. For example, the chance of a falling load accident occurring when the truck is a sitdown, counterbalanced rider truck is much greater than when the vehicle is a motorized hand truck because the height that the load can be raised on the sitdown rider truck is much greater than the hand truck.

Correspondingly, the method or means to prevent the accident or to protect the employee from injury may be different with different type trucks. When a rider truck is involved in a tipover accident, the operator has the opportunity to remain in the operator's position on the vehicle during the tipover, thereby minimizing the potential for injury. In most cases, the operator of a rider truck is injured in a tipover accident when he or she attempts to jump clear of the vehicle when it begins to tip over. Because the natural tendency of the operator is to jump downward, he or she lands on the floor or ground and is then crushed by the overhead guard of the vehicle. Consequently, the operator should be trained to stay with the vehicle during a lateral tipover. On the other hand, when an order picker tips over with the platform in a raised position, generally the operator should attempt to jump clear of the vehicle, and should be trained accordingly.

Because the powered industrial truck is a motor vehicle, its operation is similar to the automobile and some of its hazards are the same as those experienced during operation of the automobile. Both the automobile and the powered industrial truck are subject to some of the same hazards such as contacting both fixed and movable objects (including employees) and tipping over.

Additionally, there are hazards associated with operating the vehicle at an excessive rate of speed and the hazard of skidding on a wet or otherwise slippery ground or floor. Driving a powered industrial truck at an excessive rate of speed may result in the loss of control of the vehicle, causing the vehicle to skid, tipover, or fall off a loading dock or other elevated walking or working surface. Failure to maintain control of the vehicle also may cause the vehicle to strike an employee or some stored material, causing the material to topple and possibly injure another employee. In these cases, training which reinforces driver training is necessary so that the operator will react properly to minimize the hazard to him or herself and to other employees.

Although there are many similarities between the automobile and the powered industrial truck, there are also many differences. Here greater training is required so that operators are aware of the differences. Some of the characteristics of a powered industrial truck that have a pronounced effect upon its operation and safety that are outside their auto driving experience are its ability to change its dynamic stability, to raise, lower and tilt loads, and to steer with the rear wheels while powered by the front wheels. The capability to move loads upwards, downwards, forwards and backwards causes a shift of the center of gravity of the vehicle and can adversely affect the overall stability. When a load is raised or moved away from the vehicle, the vehicle's longitudinal stability is decreased. When the load is lowered or moved closer to the vehicle, its longitudinal stability is increased.

To mitigate the hazards of stability caused by the movement of the material being handled, OSHA has seven provisions that address proper operation of a powered industrial truck. These provisions are § 1910.178 (n)(15), (o)(1), (o)(2), (o)(3), (o)(4), (o)(5), and (o)(6). These provisions specify:

(15) While negotiating turns, speed shall be reduced to a safe level by means of turning the hand steering wheel in a smooth, sweeping motion. Except when maneuvering at a very low speed, the hand steering wheel shall be turned at a moderate, even rate.

(O) *Loading.* (1) Only stable or safely arranged loads shall be handled. Caution shall be exercised when handling off-center loads which cannot be centered.

(2) Only loads within the rated capacity of the truck shall be handled.

(3) The long or high (including multiple-tiered) loads which may affect capacity shall be adjusted.

(4) Trucks equipped with attachments shall be operated as partially loaded trucks when not handling a load.

(5) A load engaging means shall be placed under the load as far as possible; the mast shall be carefully tilted backward to stabilize the load.

(6) Extreme care shall be used when tilting the load forward or backward, particularly when high tiering. Tilting forward with load engaging means elevated shall be prohibited except to pick up a load. An elevated load shall not be tilted forward except when the

load is in a deposit position over a rack or stack. When stacking or tiering, only enough backward tilt to stabilize the load shall be used.

Knowledge of, and adherence to these principles, as well as the other requirements of the OSHA standard, are essential for safe load handling and vehicle operation. Training is needed in these requirements.

Each powered industrial truck has a different ''feel'' that makes its operation slightly different from the operation of other trucks. The workplaces where these trucks are being used also present particular hazards. For these reasons, a uniform or consistent set of hazards for all industrial trucks and their operation cannot be delineated. The hazards addressed in this section relating to the use of powered industrial trucks have been generalized rather than being make or model specific. For this reason, development of a single ''generic'' training program which fits all powered industrial trucks and their operation is impractical. In developing an effective training program, there are three major areas of concern regarding the hazards of the operation of powered industrial trucks. The three major groups of hazards of powered industrial trucks and their operation are hazards associated with the particular make and model truck, hazards of the workplace, and general hazards that apply to the operation of all or most powered industrial trucks.

There are other hazards caused by improper operation of a powered industrial truck. Among these hazards are: Falling loads caused by overloading or improperly loading powered industrial trucks (including carrying unbalanced or unstable loads); the vehicle falling from platforms, curbs, trailers or other surfaces on which the vehicle is operating; driving the vehicle while the operator has obstructed view in the direction of travel or the operator not paying full attention to the operation of the powered industrial truck; and the vehicle being operated at an excessive rate of speed. OSHA has identified several accidents that have occurred when an employee other than the operator is ''given a ride'' on a powered industrial truck. Most trucks were designed and are intended to allow only the operator to ride on the vehicle. The carrying of other persons may result in an accident when that other person either falls from the vehicle or contacts some obstruction when the vehicle is driven in proximity to that obstruction. Finally, powered industrial truck accidents have occurred because the vehicle was not maintained (most commonly, employees being overcome by excessive carbon monoxide exposure) or when the powered industrial truck was not being maintained properly.

Each of these hazards may be more or less consequential based upon the method of operation of the powered industrial truck, the loads being carried, and the workplace where the vehicle is being operated. Truck operators must be trained to recognize unsafe conditions and how to react to them when they occur.

Several features of a powered industrial truck contribute either directly or indirectly to the existence or severity of the hazards of the vehicle. Some of the factors, that would either create or enhance the hazards of the particular truck, are the placement of the critical components of the vehicle, the age of the vehicle, and the manner in which the vehicle is operated and maintained.

There are other hazards related to the use of powered industrial trucks that are caused or enhanced by the characteristics of the workplace. Those hazards include the following: operating powered industrial trucks on rough, uneven or unlevel surfaces; operating powered industrial trucks with unusual loads; operations in hazardous (classified) areas; operation in areas where there are narrow aisles; where there is pedestrian traffic; or where employees are working in or adjacent to the path of travel of the powered industrial truck.

The operation of a powered industrial truck presents hazards not only to the operator, but also endangers other employees working with or around the vehicle. As explained in the section entitled ''Accident, injury and other data'', below, employees other than operators have been injured or killed in accidents involving powered industrial trucks. Proper training can reduce accidents resulting from the above causes.

IV. Accident, Injury and Other Data

This section of the preamble contains a discussion of the reports, studies and other sources of data and information that were analyzed to determine the magnitude and extent of the problems that powered industrial truck operator training can mitigate.

A. The Bureau of Labor Statistics (BLS) maintains a database entitled, Census of Fatal Occupational Injuries (CFOI). The CFOI is a compilation of information on fatal work injuries that occurred in the 50 States and the District of Columbia. The CFOI uses death certificates, workers compensation reports and other Federal and State records to gather pertinent information. Work relationships are verified by using at least two source documents.

The program collects information on the workers and the circumstances surrounding each fatality. The data are compiled on an annual basis.

In April, 1994, BLS published a booklet entitled, Fatal Workplace Injuries in 1992: A Collection of Data and Analysis (Ex. 3–4). In this booklet, there was an article written by Gary A. Helmer entitled, Fatalities Involving Forklifts and Other Powered Industrial Carriers, 1991–1992. This report contains information contained in the CFOI on 170 fatal powered industrial truck accidents. Table 1 lists the classifications of those powered industrial truck accidents.

TABLE 1.—CLASSIFICATION OF FORKLIFT FATALITIES, CFOI, 1991–1992

How accident occurred	No.	Percent
Forklift overturned	41	24
Forklift struck something, or ran off dock	13	8
Worker pinned between objects	19	11
Worker struck by material	29	17
Worker struck by forklift	24	14
Worker fell from forklift	24	14
Worker died during forklift repair	10	6
Other accident	10	6
Total	170	100

Source: Bureau of Labor Statistics, *Fatal Workplace Injuries in 1992, A Collection of Data and Analysis,* Report 870, April 1994.

B. Measuring the Effectiveness of an Industrial Lift Truck Safety Training Program.

In 1984, H. Harvey Cohen and Roger C. Jensen, working under contract with the National Institute for Occupational Safety and Health (NIOSH), published an article in the Journal of Safety Research (Fall 1984, Vol. 15, No. 3, pps. 125–135) entitled, Measuring the Effectiveness of an Industrial Lift Truck Safety Training Program (Ex. 3–5). The article contained an analysis of two studies that were undertaken to measure objectively the effects of safety training of powered industrial truck operators.

This article detailed the results of an experiment that was conducted to evaluate the value of training powered industrial truck operators using a behavioral (work) sampling procedure to obtain objective data about work practices that correlate with injury risk. There were two separate studies conducted in this experiment, one at each of two similar warehouses. The

studies that comprised the experiment were conducted to assess the value of training and the influence of post training actions on the safety performance of workers.

There were 14 criteria used in measuring the performance of the trainees. Each of the criterion was selected because it was (a) measurable, (b) frequently observable, (c) capable of being reliably observed, (d) related to accident occurrence, and (e) amenable to corrective action through training. The fourteen criteria observed were: Warns other operators, yields to trucks, warns co-workers, yields to co-workers, sounds horn at blind intersection, slows down at blind intersection, looks at blind intersection, looks in direction of travel, maintains moderate speed, avoids quick starts/changes of direction, keeps all body parts within truck, maintains forks in proper position, maintains balanced load, and drives properly in reverse. Each observation of the operation of the powered industrial trucks resulted in all criteria being evaluated (either correctly performed, incorrectly performed, or not observed). An error rate for each criterion was calculated by dividing the number of incorrect behaviors observed by the total behaviors observed.

Each of the groups of employees were subdivided into smaller groups. These groups were then given training at different times during the study and, in some cases, additional feedback following the training.

The first study was conducted in four phases. The pretraining phase was conducted with none of the operators having received special training. During the second phase, the control group remained untrained, the treatment group received training, and the treatment-plus-feedback group received training and also received performance feedback. In the third phase, the control group received training so that all three groups had received training but only the training-plus-feedback group received performance feedback. The retention phase started three months after the end of the third phase of the study and the performance of all operators was evaluated without regard to their previous categorization.

The error rates of the various groups during the different phases of the study are given in Table 2.

TABLE 2.—SUMMARY OF MEAN ERROR RATES [1]

[Warehouse 1]

Group	Pre-training	Post-training 1	Post-training 2	Retention
Control	.34	.32	.23	
Training	.33	.27	.26	
Training + Feedback	.35	.27	.25	
All operators	.34	.27	.25	.19

The mean error rate is defined in the study as the number of incorrect behaviors observed divided by the total behaviors observed.

NOTE: The mean error rate for all operators began at .34, that is, in 34 percent of the observed criteria, the tasks observed and evaluated were performed improperly.

Source: Measuring the Effectiveness of Industrial Lift Truck Safety Training Program, Journal of Safety Research, Vol. 15, No. 3, Fall 1984, pp. 125–135.

Following the initial training (post-training 1), all three groups showed a decrease in their mean error rates with the training-plus-feedback group showing the largest decrease (from .35 to .27, a 23 percent decrease) followed by the training-only (from .33 to .27, an 18 percent decrease) and the control group (from .34 to .32, a 6 percent decrease). The reduction in the error rate of the control group from the pre-training to the post-training 1 phase of the study was attributed to a peer modeling influence, i.e., the control group operators were copying the behavior of their previously trained counterparts. Toward the end of the post-training 1 phase, the error rates of the three groups converged, suggesting that the effects of the training program had begun to wear off. Observers also noted that some behaviors were being compromised when employees of different knowledge levels were required to interact, particularly in conflict avoidance situations such as signaling and yielding at blind intersections.

During the post-training 2 phase of the study, all groups improved in performance, particularly the original control group. This group's performance improved by 28 percent (from a mean error rate of .32 to .23). Additional evidence of the effect of peer modeling may be deduced from the fact that the performance of the other two groups (the training and the training and feedback groups) continued to improve although there was no additional instruction given to those groups.

The retention phase of the study was conducted three months following the completion of the post-training 2 phase of the study. It was intended to determine the longer term effects of the training. The results of this phase of the study indicate an additional improvement in the performance of the operators with the mean error rate decreasing from .25 to .19, a 24 percent improvement in their performance. The total performance gain achieved during this study was a 44 percent improvement from the pre-training (baseline) phase through the retention phase (from a mean error rate of .34 to a final error rate of .19). The data indicate that there were significantly fewer errors at each successive phase of the study.

The second study was conducted in order to verify and extend the findings of the first study. Consequently, a modified experimental design was used to eliminate the mitigating influence of the untrained control group. In the second study, all operators were trained at the same time and all received performance feedback. Comparisons were made only before and after training. The study was divided into three phases: Pre-training, post-training and retention. The retention phase of the study was again conducted three months after the conclusion of the prior phase. The mean error rates during the three phases of the study are given in Table 3.

TABLE 3.—SUMMARY OF MEAN ERROR RATES STUDY 2

Pre-training	Post-training	Retention
.23	.09	.07

Source: Measuring the Effectiveness of Industrial Lift Truck Safety Training Program, Journal of Safety Research, Vol. 15, No. 3, Fall 1984, pp. 125–135.

Following the training of the vehicle operators, there was a 61 percent

improvement in performance scores (from an error rate of .23 to .09). Observation in the retention phase of this study showed an additional reduction of 22 percent in mean error rates (from .09 to .07 mean error rate). This corresponds closely to the 24 percent gain experienced in Study 1. The overall improvement in mean error rates between the pre-training error rate (.23) to that achieved during the retention phase (.07) was a reduction of 70 percent.

C. In 1987, Nancy Stout-Wiegand of the National Institute for Occupational Safety and Health (NIOSH) published an article in the Journal of Safety Research (Winter 1987, Vol 18, No. 4, pp. 179–190) entitled, Characteristics of Work-Related Injuries Involving Forklift Trucks (Ex. 3–6). This article analyzed powered industrial truck injuries reported in two occupational injury databases—the National Electronic Injury Surveillance System (NEISS) and the Bureau of Labor Statistics' Supplementary Data System (SDS).

The NEISS database is composed of records from a national sample of 200 hospital emergency rooms and burn centers handling all types of injuries. The NEISS database was originally established by the Consumer Product Safety Commission, therefore, the original intent was to gather data about accidents involving commercial products rather than industrial injuries. The hospital emergency rooms were not necessarily those located in industrial areas that would predominantly treat industrial injuries and illnesses. The data from this sample are weighted to represent the nation in numbers and characteristics of traumatic injuries treated in emergency rooms and burn centers. A subset of this database—the work related injuries—is maintained by NIOSH. Since the NEISS database records only injuries treated in emergency rooms and burn centers, traumatic work injuries treated by private practitioners or by industry or private clinics are not included in the NEISS database. Moreover, chronic injuries, such as injuries due to overexertion, are not as likely to be treated in emergency room as are acute traumatic injuries, and, therefore are probably underrepresented in the NEISS database. Other probable sources of error in the calculation of accident rates include misclassification of the sources of injury or the agent of injury. For example, if an employee fell while elevated on the forks of a powered industrial truck, the accident could be misclassified as a fall from elevation rather than a fall from a forklift. Similarly, if an employee were struck in the head by part of a load which fell from a powered industrial truck, the accident could be classified as employee struck by falling object. In either case, the accident would have involved a powered industrial truck, but in neither case would the accident have been classified as one in which a powered industrial truck was involved.

The Supplementary Data System (SDS) database is composed of workers' compensation claims for injuries involving lost workdays. There were 30 states that provided information to the SDS system. The SDS system reports the occupations of injured workers and states where the claim was filed. SDS includes only compensable injuries. The definition of a compensable injury varies from state to state, with some injuries being compensable, for example, if they result in one day or more away from work. In other states, the time away from work may be up to 7 days before the injury becomes compensable.

The SDS and NEISS data do not necessarily represent the same injuries because injuries treated in emergency rooms do not always result in lost workdays. At the same time, compensable injuries included in SDS may not have been treated in emergency rooms and thus would not be represented in NEISS. However, both of these databases represent the more serious injuries involving powered industrial trucks, that is, those requiring treatment in emergency rooms and those which result in compensable injuries.

In 1983, the SDS system identified 13,417 workers' compensation claims for lost-workday injuries involving powered industrial trucks that occurred in 30 states. Assuming that these 30 states represent an average of the whole population, then the number of accidents which occurred nationally would be five-thirds of the 13,417 accidents, or approximately 22,400 compensation claims for lost-workday injuries involving powered industrial trucks filed nationally. This number is comparable to the estimated 24,000 forklift-related injuries that were treated in U.S. emergency rooms in 1983 as reported by NIOSH from information gathered by the NEISS system. In 1985, the NEISS system figures were used to determine that about 34,000 powered industrial truck related accidents were treated in emergency rooms. This is an increase of about 39% over a three-year period of time.

This report also contained a tabulation of the occupations of the injured workers. The breakdown of the occupations of those employees and the corresponding percentage of the accidents is listed in Table 4.

TABLE 4.—PERCENTAGE DISTRIBUTION OF POWERED INDUSTRIAL TRUCK INJURIES BY OCCUPATION OF INJURED EMPLOYEE

Occupation	Percent
Professional, technical and kindred workers	0.3
Managers and administrators (except farm)	2.0
Sales workers	0.8
Clerical and kindred workers	5.0
Craftsmen and kindred workers	(15.5)
Mechanics	6.5
Foremen	3.0
Other craftsmen and kindred workers	6.0
Operatives (except transportation)	(17.5)
Assemblers	1.4
Packers/wrappers	1.1
Welders	0.9
Miscellaneous/unspecified operatives	9.2
Other operatives	4.9
Transportation equipment operatives	(20.8)
Powered industrial truck operators	12.3
Truck drivers	5.5
Motormen	1.7
Deliverymen	1.2
Other transportation equipment operators	0.1
Laborers (except farm)	(37.3)
Warehousemen	10.4
Freight and material handlers	7.3
Stock handlers	4.4
Construction laborers	2.2
Miscellaneous/unspecified laborers	8.0
Other laborers	1.6
Farmers (managers and laborers)	1.5
Service workers	1.8
Occupations unspecified	1.1

Source: *Characteristics of Work-Related Injuries Involving Forklift Trucks*, Journal of Safety Research, Vol. 18 No. 4, Winter 1987, pp. 179–190.

D. Industrial Forklift Truck Fatalities—A Summary.

The Office of Data Analysis (ODA) of OSHA's Directorate of Policy conducted an examination of 53 investigative case files involving powered industrial truck fatalities that occurred between 1980 and 1986 (Ex. 3–7). The results of their analysis is summarized below.

TABLE 5.—OFFICE OF DATA ANALYSIS TYPE ACCIDENTS—53 POWERED INDUSTRIAL TRUCK FATALITIES

Type accident	No.	Percent
Crushed by tipping vehicle	22	42
Crushed between vehicle and a surface	13	25

TABLE 5.—OFFICE OF DATA ANALYSIS TYPE ACCIDENTS—53 POWERED INDUSTRIAL TRUCK FATALITIES—Continued

Type accident	No.	Percent
Crushed between two vehicles	6	11
Struck or run over by vehicle	5	10
Struck by falling material	4	8
Fall from platform on forks	2	4
Accidental activation of controls	1	2

Source: *Industrial Forklift Truck Fatalities—A Summary*, Report from Office of Data Analysis, Directorate of Policy, OSHA, dated June 1990.

The single largest cause of the accidents was vehicle tipovers. These tipovers were attributed to the following: (1) The vehicle being out of control (speeding, elevated loads, mechanical problems, etc.; 7 instances—13 percent); (2) the vehicle being run off/over the edge of the surface (4 instances—8 percent); (3) attempting to make too sharp a turn (excessive speed, unbalanced load, etc.; 4 instances—8 percent); (4) employee jumped from overturning vehicle being pulled by another vehicle (2 instances—4 percent); vehicle skidded or slipped on slippery surface (2 instances—4 percent); (5) wheels on one side of vehicle ran over raised surface or object (2 instances—4 percent); and (6) vehicle tipped over when struck by another vehicle (1 instance—2 percent).

The second highest number of fatalities reported in the ODA study was caused by an employee being crushed between a vehicle and a surface. The accidents were attributed to: (1) The operator getting off the vehicle while it was running (7 instances—13 percent); (2) worker on platform being crushed between platform and overhead surface (2 instances—4 percent); (3) employees leg being caught when vehicle sideswiped metal surface (1 instance—2 percent); (4) employee attempting to prevent vehicle tipover by holding up overhead guard (1 instance—2 percent); (5) employee changing tire and vehicle fell from jack (1 instance—2 percent) and (6) empty 55 gallon drum used for support vehicle during maintenance collapsed (1 instance—2 percent).

The six accidents that were attributed to employees being crushed between two vehicles were caused by contact between two moving powered industrial trucks (4 cases) and between a powered industrial truck and a stationary vehicle in the other two instances.

Of the five accidents which were identified as an employee being struck or run over by vehicle, four were accidents where employees other than the vehicle operator were struck by the vehicle. The remaining one was an operator trying unsuccessfully to board a free rolling vehicle.

E. The OSHA Fatality/Catastrophe Reports. OSHA records a summary of the results of investigations of all accidents resulting in fatalities, catastrophes, amputations and hospitalizations of two or more days, and those accidents that have received significant publicity or property damage. These summaries are recorded on an OSHA Form 170 and include an abstract describing the activities taking place at the time of the accident and the causes of the accident. These reports are stored in a computerized database system.

OSHA queried the computer for all reports that contained the keyword ''industrial truck''. There were 4268 total reports in the system that resulted in 3038 fatalities, 3244 serious injuries, and 1413 non-serious injuries (many of the accidents resulted in multiple fatalities and/or injuries). The use of the keyword ''industrial truck'' produced a printout of 208 accidents (Ex. 3–8). These 208 accidents resulted in 147 fatalities, 115 serious injuries and 34 non-serious injuries.

By adding the number of fatalities, serious injuries and non-serious injuries and dividing by the number of accidents, it was determined that 1.4 injuries of some nature occurred per accident. OSHA also determined the percent of each of the three classes of accidents that involved powered industrial trucks. Those percentages are 4.8 percent of the fatalities, 3.5 percent of the serious injuries and 2.4 percent of the non-serious injuries were attributable to an accident that involved a powered industrial truck.

OSHA looked at the OSHA 170s to determine the causes of the accidents that were attributable to the use of powered industrial trucks in general industry. Table 6 presents a compilation of the causes of those accidents.

TABLE 6.—CAUSES OF ACCIDENTS [1]—OSHA INVESTIGATION SUMMARIES (OSHA 170S)

Cause	No. of reports
No training [2]	19
Improper equipment	10
Overturn	53
Unstable load	45
Overload, improper use	15

TABLE 6.—CAUSES OF ACCIDENTS [1]—OSHA INVESTIGATION SUMMARIES (OSHA 170S)—Continued

Cause	No. of reports
Obstructed view	10
Carrying excess passenger	8
Operator inattention	59
Falling from platform or curb	9
Falling from trailer	6
Elevated employee	26
Operator struck by load	37
Other employee struck by load	8
Accident during maintenance	14
Vehicle left in gear	6
Speeding	5
Not powered industrial truck accident	9

[1] The causes of the accidents were determined by the narrative in the accident report. In most cases, the narrative emphasized the cause of the accident, however, in a few cases, reasonable and appropriate assumptions were made. In some cases, multiple accident causes were described in the narrative portion of the report, or were assumed to have caused the accident. (See Ex. 3–8.)

[2] Of the 19 instances when the report contained the indication that a lack of training was one of the causal factors of the accident, there were 6 serious violations issued, 2 other (nonserious) violations and 11 instances where no citation was issued.

Source: Office of Electrical, Electronic and Mechanical Engineering Safety Standards, Directorate of Safety Standards Programs, OSHA.

Using the OSHA Form 170 data, OSHA also compiled a listing of the industries in which accidents occurred. Table 7 presents a tabulation of the SIC codes, the description of the industry, and the number of times that accidents were identified as having occurred in those industries. For a complete listing of the individual industries, see Ex. 3–9.

TABLE 7.—INDUSTRIES WHERE ACCIDENTS OCCURRED—OSHA INVESTIGATIVE SUMMARY (OSHA FORM 170) REPORTS

SICP division	Description	Times cited
B	Mining	4
C	Construction	25
D	Manufacturing	95
E	Transportation, communication and utilities.	22
F	Wholesale trades	25
G	Retail trades	18
I	Services	7
J	Public administration	4

NOTE: The breakdown of accidents does not include agricultural accidents since establishments of 10 or less employees in this industry are exempt from OSHA jurisdiction.

Source: Office of Electrical, Electronic and Mechanical Engineering Safety Standards, Directorate of Safety Standards Programs, OSHA.

F. *The OSHA Emergency Communications System Reports.*

OSHA has another internal system for collecting information about serious accidents. This is a telephone system which requires that serious and/or significant accidents be telephoned into the National Office.

The telephone call system is part of the OSHA emergency communications system. Regional Administrators are required to file a first report of fatalities, catastrophes and other important events (such as those that receive significant publicity) to the National Office. The information contained in these reports is disseminated to the responsible officials in OSHA and to the directorates of the Agency. These reports are broken down within the various offices and distributed to the appropriate personnel. There are approximately 1200 reports received by the National Office yearly. See Ex. 3–10.

None of the reports are screened before the OSHA National Office receives them to eliminate those from a certain industry, occupation or because of other factors. Although these reports may not be considered statistically significant by themselves in attempting to determine the number of accidents that have occurred, the lack of prior screening indicates that they represent a reasonable sampling of the most serious type accidents and that the causes of the accidents closely parallel the distribution of the causes of all accidents.

OSHA has examined the First Report of Serious Injury reports and identified 247 that involved powered industrial trucks. These accidents occurred between 1980 and the present. OSHA looked at the number of accidents reported through its telephonic system and determined the percentage of those accidents that involved powered industrial trucks. Table 8 contains a listing of the number of First Reports of Serious Accident reports which were received from 1980 to present, the number of those accidents which involved powered industrial trucks, and the corresponding percentage.

TABLE 8.—YEARLY SUMMARY OF FIRST REPORT OF SERIOUS ACCIDENTS

Year	Total reports	Pit accidents	Percent
1980	200	2	1
1981	125	2	1.6
1982	113	0	0
1983	115	3	2.6
1984	181	1	.6
1985	456	15	3.3
1986	1,147	44	3.8
1987	1,236	38	3.1
1988	1,330	47	3.5
1989	1,150	44	3.8
1990	1,105	41	3.7
1991	[1] 215	10	4.7
Totals [2]	6,424	247	3.6

[1] These are the number of total reports received between the first of the year until March 31.

[2] The total number of reports, the number of accidents involving powered industrial trucks and the percentage were calculated using the figures from 1985–1990. The number of accidents reported during the years 1980–1984 and those reported during 1991 were too few to be representative.

Source: Office of Electrical, Electronic and Mechanical Engineering Safety Standards, Directorate of Safety Standards Programs, OSHA.

Each of these reports were examined to determine the causes of the accidents. In some instances, multiple causes were identified. Table 9 lists the causes of the accidents and the number of accidents which were attributable to that cause.

TABLE 9.—CAUSES OF ACCIDENTS (POWERED INDUSTRIAL TRUCKS) FIRST REPORTS OF SERIOUS ACCIDENT

Cause of the accident	No. Accidents
Tipover	58
Struck by powered industrial truck	43
Struck by falling load	33
Elevated employee on truck	28
Ran off loading dock or other surface	16
Improper maintenance procedures	14
Lost control of truck	10
Truck struck material	10

TABLE 9.—CAUSES OF ACCIDENTS (POWERED INDUSTRIAL TRUCKS) FIRST REPORTS OF SERIOUS ACCIDENT—Continued

Cause of the accident	No. Accidents
Employees overcome by carbon monoxide or propane fuel	10
Faulty powered industrial truck	7
Unloading unchocked trailer	7
Employee fell from vehicle	7
Improper use of vehicle	6
Electrocutions	2

Source: Office of Electrical, Electronic and Mechanical Engineering Safety Standards, Directorate of Safety Standards Programs, OSHA.

G. The OSHA General Duty Clause Citation Analysis.

The Office of Mechanical Engineering Safety Standards of OSHA, conducted an analysis of the citations which were issued between 1979 and 1984 for violations of the general duty clause (section 5(a)(1)) of the Occupational Safety and Health Act. During that period, there were a total of 3637 inspections in which at least one 5(a)(1) citation was issued. See Ex. 3–11.

Sixty-five general duty clause citations involved powered industrial truck operations. Each was examined to determine the nature of the violation. Table 10 lists the violation that was alleged to have occurred.

TABLE 10.—SUMMARY OF GENERAL DUTY CLAUSE (5(A)(1)) CITATIONS

Violation	No. instances
Employee elevated on forks	44
Improper operation of vehicle	13
Improper maintenance on vehicle	5
No vehicle operator training	2

TABLE 10.—SUMMARY OF GENERAL DUTY CLAUSE (5(A)(1)) CITATIONS—Continued

Violation	No. instances
Order picker without fall protection	1

Source: Office of Electrical, Electronic and Mechanical Engineering Safety Standards, Directorate of Safety Standards Programs, OSHA.

V. Basis for Agency Action

OSHA believes that, as the above discussion indicates, that there is a sufficient body of data and information on which to base a revision of the existing standard for powered industrial truck operator training and the promulgation of the same requirement for powered industrial truck operator training in the construction, maritime and agriculture industries. These requirements would reduce the number of fatalities and injuries resulting from accidents involving powered industrial trucks operated by untrained or insufficiently trained employees.

According to OSHA's data and information, powered industrial truck accidents account for approximately 4.8 percent of the fatalities, 3.5 percent of the serious injuries and 2.4 percent of the non-serious injuries that occur in general industry each year. These accidents resulted in an average of 107 fatalities, 33,800 serious injuries, and 61,800 non-serious injuries per year from 1981 through 1990.

In analyzing its accident data, OSHA has derived two separate estimates of the number of fatalities and serious injuries that occur to employees due to powered industrial truck accidents. Because the two set of numbers are in the same range, the Agency has presented both. It should be noted that the number of fatalities is virtually identical using either method of derivation. However, slightly different definitions are used for estimating injuries. The other set of estimates are presented in the Preliminary Regulatory Impact Analysis, below.

There are approximately 68,400 accidents involving powered industrial trucks in general industry per year. This figure was arrived at by totaling the fatalities, serious, and non-serious injuries and dividing this result by 1.4 (the number of injuries per accident determined from the OSHA Fatality/Catastrophe Reports). According to the Industrial Truck Association (ITA), there are currently approximately 855,900 powered industrial trucks in the United States, therefore approximately 8 percent of the powered industrial trucks will be involved in an accident this year (this assumes a truck is involved in only one accident this year). Since the ITA has stated that the useful life of a powered industrial truck is 8 years, that means that at some point during its useful life, almost two-thirds of the powered industrial trucks will be involved in some type accident (again, assuming there is only one accident per truck).

OSHA also looked at the type accidents that were described in the section of this preamble entitled ''Accident, injury and other data.'' The three reports that contained that information were the ''Industrial Forklift Truck Fatalities—A Summary'' (ODA Study); ''The OSHA Fatality/Catastrophe Reports'' (Fat/Cat Study); and the ''OSHA Emergency Communications System Reports, First Reports.'' The number of different types of accidents are given in Table 12, below. Since the Industrial Forklift Truck Fatalities report was the only one that used a single causation methodology for categorizing the accidents, this is the only study for which percentages of the accidents were calculated. These percentages appear in parentheses following the numbers.

TABLE 11.—CAUSES OF POWERED INDUSTRIAL TRUCK ACCIDENTS

Cause	Study		
	ODA study	Fat/cats	First reports
Tipovers	22 (42%)	53	58
Struck by vehicle	24 (46%)	.....	43
Struck by falling material	4 (8%)	90	[1] 43
Elevated employees	2 (4%)	26	28
Control activation	1 (2%)	[2] 6	.....
Improper equipment or usage	.....	10	[3] 13
Vehicle overloaded	.....	15	.....
Obstructed view	.....	10	.....
Maintenance acc	.....	14	14
Speeding	.....	5	.....
Fell from platform	.....	.....	[4] 23
Lost control	.....	.....	10
Overcome by CO	.....	.....	10
Employee fell from vehicle	.....	.....	7
Electrocution	.....	.....	2

[1] This number represents the accidents due to material that was in the powered industrial truck (a portion of the load) falling on an employee-33 cases, and stacked material falling on an employee when struck by a powered industrial truck-10 cases.

[2] This number represents the accidents due to the operator leaving the vehicle in gear, dismounting the vehicle and being struck when the vehicle moved.

[3] This number represents the number of accidents when either the vehicle was used improperly (6 instances) or the vehicle was defective (7 instances).

[4] This number represents the number of accidents when the operator drove the vehicle off an elevated dock (16 instances) or fell against the face of the dock when an unchocked trailer rolled away from the dock when being loaded or unloaded.

Sources: ''The Forklift Truck Fatalities—A Summary Report'' (ODA Study); ''The OSHA Fatality/Catastrophe Reports'' (Fat/Cats); and ''The OSHA Emergency Communications System Reports (First Reports)''.

In 9 percent of the accident investigations in which an OSHA 170 was prepared (19 of 208), lack of training was identified as a causal factor. In more than half of these accident investigations (11 of 19), lack of training was not cited by OSHA compliance officers. However, OSHA's standard specifies that only trained and authorized operators are allowed to operate powered industrial trucks. Absence of a citation when lack of training was identified as a causal factor in the accident can only be attributed to the fact that many compliance officers believe that the powered industrial truck training requirement (29 CFR 1910.178(l)) is vague and unenforceable in its present form.

In addition, most of the accidents where lack of training was not mentioned, clearly could have been avoided through better training. When OSHA completes this rulemaking, in light of the large number of industrial truck accidents, based on priorities and resources, it will consider whether to revise the entire powered industrial truck standard. Persons also may wish to comment on whether OSHA should revise the entire standard in the future.

VI. The Need for Training

Training is generally defined as making a person proficient through the use of specialized instruction and practice. Training is the means by which an employer ensures that employees have the knowledge, skills, and abilities that are necessary for the employees to do their jobs correctly.

Once an employee acquires the basic knowledge, skills, and abilities, refresher or remedial training may be used to reinforce or improve those attributes, to provide new material, to provide material that was previously discussed in a new manner, or to simply maintain an awareness of the material that had previously been taught. Refresher or remedial training is normally conducted on a predetermined periodic basis, that is, on a monthly, semi-annual, or annual basis.

Training may be as simple and informal as a supervisor pointing out either an error in the manner in which an employee is doing a job (making an on-the-spot correction) or showing an employee how to do a particular task (demonstrating the proper method to do the job). On the other end of the spectrum is the detailed, structured instruction that uses the classical methods of training (lectures, conferences, formal demonstrations, practical exercises, examinations, etc.). Formal training is usually used to impart a greater amount of, more complicated, or more detailed information to a trainee.

For the most part, employees do not start out with the innate knowledge, skills, and abilities to perform many of the complicated or difficult practices and procedures that occur commonly in the workplace. For example, many states require potential car drivers to pass either driver training and/or driver education programs to qualify for a drivers license. Even with this training, young drivers are involved in a disproportionate number of accidents. It is only after the drivers have more experience that the number of accidents decreases. Although many employees who are selected or assigned to drive powered industrial trucks are licensed to drive automobiles, there are enough dissimilarities between these two types of vehicles and their operation to require additional knowledge, skills, and abilities to operate a powered industrial trucks safely. Operational characteristics of powered industrial trucks, such as using vehicles equipped with rear-wheel steering and front-wheel drive and the hoisting—moving—lowering of loads, require operator training and practice to master the different driving skills that must be used when an employee operates powered industrial trucks.

Many of these accidents either can be prevented, or the seriousness of the injury to the employee can be mitigated by training employees. Effective training and supervision also can prevent the occurrence of unsafe acts such as speeding, failing to look in the direction of travel, and failing to slow down or stop and sound the vehicle's horn at blind intersections and other areas where pedestrian traffic may not be observable. Another example in which training can prevent or lessen the severity of an accident of this kind is directly related to the stability of powered industrial trucks when traveling with an elevated load. Effective operator training should include the admonition that the vehicle can only be moved when the load is at its lowest point. Even if this admonition is ignored and the vehicle tips over, the injury to the operator is usually minimal if the he or she stays with the vehicle. As previously discussed, the usual injury in a powered industrial truck tipover occurs when the operator attempts to jump off the vehicle when it is tipping over. Since the normal tendency is for a person to jump downward, the operator lands on the floor or ground in the path of the overhead guard and the usual injury is a crushing injury of the head, neck or back when the overhead guard contacts the employee. Training an employee to stay with the vehicle will reduce the severity of some of these injuries.

In 1990, the Office of Technology Assessment of the U.S. Congress published a book at the request of the Senate Labor and Human Resources Committee, the House Education and Labor Committee, and the Senate Finance Committee. This book is entitled, Worker Training: Competing in the New International Economy, OTA–ITE–457 (Washington, DC: U.S. Government Printing Office, September 1990; Ex. 3–12) Although this book addresses the need for training so that American industry can remain competitive in the world marketplace, there were many salient facts presented, both about the state of training in the workplace and the need for additional training.

To be effective, training must impart appropriate skills, must not include irrelevant information and must accommodate varying employee backgrounds and learning styles. Training is most effective when it is quickly reinforced on the job. Poor timing of training, lack of reinforcement at work, and other factors prevent effective transfer of knowledge to the job.

The book also pointed out that small business access to new employees with good skills is limited. Employees hired by companies reflect the labor pool available and is dependent upon the size of the company. Small companies must draw their employees from the locally available talent pool whereas larger companies can attract prospective employees from a much larger geographical area. In order to make up for the limitations of the limited talent pool, small employers usually must provide additional training and education to achieve comparable employee performance.

The OTA book pointed out that inadequate training costs firms and employers not only in health and safety risks, but also downtime, defective parts and equipment, wasted material, late deliveries, inferior quality products and poor customer service. To maximize its effectiveness, training must be focused on workplace problems because simply providing more generalized, non-directed training will not promote industrial competitiveness. If the work is not organized to tap employee skills, the training investment will be wasted.

Finally, the book emphasized that employers historically have not trained their workers for several reasons. First, high labor turnover has mistakenly led employers to believe that skilled workers will leave so their companies will not recoup their training investment. Second, many employers believe that an increase in productivity will not offset the cost of training employees. As the book points out, that is not the case.

The studies conducted by Cohen and Jensen, discussed under *Accident, injury and other data* earlier in this preamble, found a reduction in operator error rate of up to 70 percent. Although a 70 percent error rate reduction can not be directly equated to a corresponding reduction in the number of accidents that this or any other group of operators will experience, improper or unsafe operation of a powered industrial truck is the major cause of the accidents and their resultant fatalities and injuries. Therefore, a reduction in the unsafe operation of a powered industrial truck will reduce the number of accidents, and the resultant fatalities and injuries.

Many standards promulgated by OSHA explicitly require the employer to train employees in the safety and health aspects of their jobs. These requirements reflect OSHA's belief that training is an essential part of an effective employer's program for protecting workers from accidents and illnesses. (See Ex. 3–13

for a complete list of the OSHA standards that require training.)

Although not all powered industrial truck accident reports spell out the lack of training as a causal factor of the accidents, each accident can, in part, be attributed to either being caused or worsened by the actions or inactions of the operator. For example, when a powered industrial truck tips over, the accident is caused by one or more of several factors, including speeding, traveling with the load in an elevated position, or improperly negotiating a turn. Training can minimize the times that these events occur.

Proper training of an employee must take into account the fact that different operating conditions (including the type and size of the load, the type and condition of the surface on which the vehicle is being operated, and other factors) can adversely affect vehicle operation. Operator training must emphasize two points regarding any potential accident scenario. These two factors are: (1) The employee should not engage in activities that may cause an accident, and (2) the employee should minimize the potential for injury (either to himself or herself or to other employees) by taking appropriate actions.

OSHA is not proposing a program of licensing or certification of powered industrial truck operators either by itself or as an adjunct to operator training. OSHA does not have the resources to conduct such a program since there are close to 1.5 million employees who operate powered industrial trucks.

VII. Summary and Explanation of the Proposed Rule

OSHA is proposing to revise the training requirement for powered industrial truck operators, 29 CFR 1910.178(l), contained in the general industry standards, and to add equivalent training requirements for the maritime industries. This proposal is intended to enhance the safe operation of powered industrial trucks in the workplace.

On February 27, 1995, OSHA submitted to the Advisory Committee on Construction Safety and Health (AC) a draft of this document. The ACCOSH recommended to OSHA that the Agency not proceed with rulemaking for that industry until the Advisory Committee had sufficient time to completely study the document and provide further recommendations. Consequently, this rulemaking is limited to general industry and the maritime industries. The Agency intends to propose to adopt for the construction industry similar requirements for training the operators of powered industrial trucks after receiving and taking into account the recommendations of the ACCOSH.

In developing this proposal, OSHA looked at the training requirements of the existing national consensus standard for powered industrial trucks, ANSI B56.1–1993, as well as training requirements from other standards (both industry and government). The non-training related requirements of those standards are beyond the scope of this proposal.

OSHA has not included suggestive language contained at paragraph 4.19.2 of the consensus standard because other enforceable language in the proposed standard covers the issue. This paragraph states, ''The operator training program should include the user's policies for the site where the trainee will operate the truck, the operating conditions for that location, and the specific truck the trainee will operate. The training program shall be presented to all new operators regardless of previous experience.''

The Agency has not adopted the language contained in 4.19.3(a) of the consensus standard because the responsibility for providing a safe workplace (including the use of a powered industrial truck) is vested with the employer under the OSH Act. This paragraph specifies, ''The primary responsibility of the operator is to use the powered industrial truck safely following the instructions given in the training program.''

The consensus standard, at 4.19.4(e) and 4.19.5 specifies the type of training and the testing that should be conducted, whereas the OSHA standard leaves the methods of training up to the employer. As explained elsewhere in this preamble, the employer is responsible for selecting the methods that are employed to train the operators. In some circumstances, the employee may be able to gain valuable information from reading the operators manual for the vehicle. In other circumstances, the employee may not be able to read and comprehend the contents of the manual and may have to be shown how to operate the truck safely.

Many of the other OSHA standards and the consensus standards specify that some means be used to verify that training was conducted. Examples of such verification include: (1) Requiring documentation of the training, (2) the production and retention of lesson plans, (3) attendance rosters, and (4) the issuance of training certificates. When refresher or remedial training is specified, these other rules usually require that a set amount of training be conducted at a regular interval (for example, a certain number of hours of refresher training be conducted annually). OSHA is including evaluation by a designated person and certification that the employee has taken the training and can competently operate the truck. Course materials also must be kept. OSHA believes that this is the appropriate method of verification. As operators vary greatly in the experience and backgrounds and they will be required to operate different types of vehicles, different types and amounts of training are necessary and OSHA does not believe it can specify a rigid curriculum.

This proposed revision of the training requirement found in § 1910.178(l) for operators of powered industrial trucks and the imposition of the same requirement for operators of powered industrial trucks in other industries (construction and maritime) specifies that the employer develop a complete training program. This program consists of an evaluation of each potential truck operator and the training of the potential operator in those subject matters relating to the operation of the truck, the work environment in which the truck will be operated and the requirements of the OSHA standard. This training program also must include a periodic evaluation of the performance of the operator and refresher or remedial training as necessary. To maximize the effectiveness of the training, OSHA is proposing to allow the employer to avoid having to conduct training that is duplicative of other training the employee has previously received. Finally, the training provisions would require that the employer certify that the training and evaluations have been conducted.

At paragraph (1)(i), OSHA specifies that each potential operator of a powered industrial truck must be capable of performing the duties that are required of the job after training and appropriate accommodation. This would include being able to climb onto and off of a truck, to sit on the vehicle for extended periods of time, and to turn his or her body to be able to look in the direction of travel when driving in reverse. Elements of this evaluation may include the employee having the physical and mental abilities to perform the job. Information obtained during the initial employee evaluation can be used to, among other things, determine how best to train the employee. For example, if the employee cannot read and comprehend the operator's manuals for the type trucks that the employee will operate, then this information would have to taught by means other than

having the employee try to read the truck manuals. The initial evaluation can be useful for the avoidance of duplicative training.

Paragraph (1)(ii) provides that the employer shall assure that the employee has received required training, that the employee has been evaluated and that the potential operator can perform the job competently. The evaluation must be carried out after the training by a designated person so that the employer can assure that the potential operator can perform the duties required of an operator in a competent manner. The conduct of this evaluation during the training is known as a practical exercise or a performance test. OSHA believes that only through evaluation by a knowledgeable person after training can an employer know that the employee has been adequately trained and can safely perform the job.

The designated person may be the employer if qualified. A small business person who has employees may send the employees to an outside training organization. Alternately, the employer may take or have training so that the employer is qualified as a designated person.

At paragraph (2), OSHA is proposing to require that the employer implement a training program for all powered industrial truck operators. This program would ensure that only trained drivers who have successfully completed the training program would be allowed to operate these vehicles. An exception to the rule would allow trainees to operate powered industrial trucks provided the operation is under the direct supervision of a designated person and the operation is conducted where is minimum danger to the trainee or other employees.

OSHA is proposing at paragraph (2)(ii) that the training consist of a combination of classroom instruction and practical training. The Agency believes that only by the use of a combination of training methods will the employee be adequately trained. Although classroom training is invaluable for the teaching of the principles of vehicle operation, it is the hands-on training and the evaluation of the operation of the vehicle that finally proves the adequacy of the training and the ability of the employee to use that training to successfully operate a powered industrial truck.

At paragraph (2)(iii), OSHA is proposing to require that all training be conducted by a designated person. OSHA defines a designated person as one who has the requisite knowledge, training and experience to train powered industrial truck operators. As discussed elsewhere in this preamble, the employer may have the necessary prerequisites to qualify as a designated person or he or she may assign the training responsibility to another person (either a knowledgeable employee or an trainer from outside the company).

To ensure that the training contains the appropriate information for the operator, OSHA has provided a list of subjects at paragraph (3). Under this rule, it is the responsibility of the employer to select the particular items that are pertinent to the type trucks that the employee will be allowed to operate and the work environment in which the vehicle will be operated. For example, if the employee will be allowed to operate an order picker, it is essential that he or she understand the location and function of the controls, the location and operation of the powerplant, steering and maneuvering, visibility, inspection and maintenance and other general operating functions of the vehicle. Additionally, it is essential that the employee know and understand that he or she must be restrained from falling when the platform of the truck is in an elevated position and that the truck must never be driven when the platform is elevated. Under this proposed requirement, it is the responsibility of the employer to select those elements of the training that are necessary for the type vehicle to be used and the workplace in which that vehicle will be operated. The employer may leave out elements if the employer can demonstrate that they are not relevant to safe operation in the employer's workplace.

An additional component of the training program is a continuing evaluation of the operator. At paragraph (4), OSHA specifies that this evaluation be conducted on a periodic basis so that the employee retains and uses the knowledge, skills and abilities that are necessary for the safe operation of the vehicle. This evaluation need not be conducted continuously, however, the employer should conduct these evaluations at intervals that will ensure that the operators have not forgotten or chosen to disregard their training. This evaluation does not have to be formalized but must consist of a designated person observing the operation to ensure that the use of the powered industrial truck is being conducted safely. OSHA requires that this evaluation be carried out at least annually.

OSHA is requiring at paragraph (5) that the employer certify that the required training and evaluations have been conducted. To minimize the paperwork burden on the employer, OSHA is specifying that the certification consist of the name of the employee, the date of the training or evaluation and the signature of the person conducting the training or evaluation.

Under this paragraph, OSHA also specifies that all the current training materials used in the conduct of training or the name and address of the outside trainer, if one is used, be maintained.

At paragraph (6), OSHA is proposing to allow the employer to forgo that portion of the training that an employee has previously received. The intent of these provisions is to allow the employer to not have to train an employee in those phases of the operation of a powered industrial truck if the employee knows the necessary information and has been evaluated and has proven to be competent to perform those duties.

As previously discussed, there are three major areas of consideration that must be emphasized when conducting a powered industrial truck training program. These three areas are: (1) The characteristics, operation and limitations of the vehicles that the trainee will be authorized to operate, (2) the hazards due to the characteristics of the workplace in which these vehicles will operate, and (3) the general safety rules that apply to these vehicles and their operation.

This proposed rule has been drafted in performance language to allow reasonable flexibility to the employer for developing the training program and conducting the training. OSHA recognizes the inherent differences in the capabilities and limitations of employees, both to assimilate the training and then to utilize the knowledge that has been gained. Therefore, the proposed regulation does not limit the employer by specifying the manner in which the training must be conducted. Similarly, the specific content of the training course has not been stated because there are different topics which must be taught due to variances in the operation of the many makes and models of vehicles and because there are different hazards in each workplace. However, OSHA has proposed the various subject matters that should be covered unless the employer determines they are not relevant to the employer's vehicle and workplace. Although some areas of concern may not be pertinent to any one workplace and vehicle, other areas are pertinent to all vehicles and workplaces.

OSHA believes that a training program needs to be conducted before the employee begins to operate a vehicle. To this end, OSHA has required initial training of employees so that they

will acquire the knowledge and skills are necessary for the safe operation of the powered industrial truck before being allowed to operate the vehicle without close supervision.

OSHA has left the particulars of the type of training (lecture, conference, demonstration, practical exercise, test or examination, etc.) to the employer. The length of the training and other variables must be based on the employee's experience and other qualifications and the nature of the work environment. The training must be based upon the type of vehicles the employee will be allowed to operate, the conditions that exist in the workplace, the general safety rules from this OSHA standard, the ability of the trainer to teach, and the ability of the trainee to learn. The ability of the employee to assimilate the information presented in the training must be used as the primary criterion for the length, type and other details of the training. Since each employee is different in his or her ability to comprehend, assimilate and use the information received in the training, OSHA believes that one standardized training course will not suffice for all employees.

The employer may choose the training provider. This could include contracting with an outside professional training company to come into the company and train the powered industrial truck operators or the employer developing and conducting the training program. In either case, the employer can choose the method or methods by which the employees will be trained and when the training is conducted.

The standard requires not only appropriate training but evaluation of the operators competency by a designated person with the knowledge to make that evaluation. This is the method that will most accurately prove that the operator has been trained and that the training has been, and continues to be, effective. Through observation of the operation of the vehicle, these questions can be answered.

When a new employee claims prior experience in operating a powered industrial truck, the employer must ensure that the employee knows how to operate the vehicle safely. This can be ascertained by questioning the employee on various aspects of the operation of the truck and by requiring the operator to demonstrate his or her ability to operate the vehicle safely through the conduct of a practical exercise.

In making a determination of an employee's claim of sufficient prior experience, the employer must consider the type of equipment that this employee professes to have operated, how long ago this experience was gained, and the type work environment in which the employee worked. Written documentation of the earlier training is also necessary to determine that proper training has been given. In addition, the competency of the employee must be evaluated. Based on the resolution of these issues, the employer can determine whether the experience is recent and thorough enough, the documentation complete, and the competency sufficient to forgo some or much of the initial training. Some training on the specific factors of the new employees workplace is always going to be necessary. Again, the major criterion of evaluation of the employee is: Does the person know how to do the job and does the vehicle operator use those knowledge, skills and abilities to do the job safely?

OSHA also is proposing to add two non-mandatory appendices. These appendices are intended to provide guidance to employers in establishing a training program (Appendix A) and in understanding to basic principles of stability (Appendix B). In neither case is the information contained in these appendices intended to provide a exhaustive explanation of the techniques of conducting training or of understanding the principles of stability, but each appendix is intended to introduce the basic concepts so that the employer can utilize the material to provide basic training.

VIII. Statutory Considerations

A. Introduction

Section 2(b)(3) of the Occupational Safety and Health Act authorizes ''the Secretary of Labor to set mandatory *occupational safety and health standards* applicable to businesses affecting interstate commerce'', and section 5(a)(2) provides that ''[e]ach employer shall comply with *occupational safety and health standards* promulgated under this Act'' (emphasis added). Section 3(8) of the OSH Act (29 U.S.C. 652(8)) provides that ''the term 'occupational safety and health standard' means a standard which requires conditions, or the adoption or use of one or more practices, means, methods, operations, or processes, reasonably necessary or appropriate to provide safe or healthful employment and places of employment.''

OSHA considers a standard to be ''reasonably necessary or appropriate'' within the meaning of section 3(8) if it meets the following criteria:

(1) The standard will substantially reduce a significant risk of material harm;

(2) Compliance is technologically feasible in the sense that the protective measures being required already exist, can be brought into existence with available technology, or can be created with technology that can reasonably be developed;

(3) Compliance is economically feasible in the sense that industry can absorb or pass on the costs without major dislocation or threat of instability; and

(4) The standard is cost effective in that it employs the least expensive protective measures capable of reducing or eliminating significant risk. Additionally, safety standards must better effectuate the Act's protective purpose than any applicable national consensus standard, must be compatible with prior agency action, must be responsive to significant comment in the record, and, to the extent allowed by statute, must be consistent with applicable Executive Orders. OSHA believes that application of these criteria results in standards that provide a high degree of worker protection without undue burden on employers.

OSHA has long interpreted section 3(8) of the OSH Act to require that, before it promulgates ''a health or safety standard, it must find that a place of employment is unsafe—in the sense that significant risks are present and can be eliminated or lessened by a change in practices [See *Industrial Union Dep't, AFL-CIO* v. *American Petroleum Inst.,* 448 U.S. 607, 642 (1980) (plurality) (Benzene).'' When, as frequently happens in safety rulemaking, OSHA promulgates standards that differ from existing national consensus standards, it must explain ''why the rule as adopted will better effectuate the purposes of this Act than the national consensus standard [29 U.S.C. 655(b)(8)].'' Thus, national consensus standards provide the minimum level of effectiveness for standards which OSHA may adopt (29 U.S.C. 655(a)).

As a result, OSHA is precluded from regulating insignificant safety risks or from issuing safety standards that do not lessen risk in a significant way.

The OSH Act also limits OSHA's discretion to issue overly burdensome rules, as the agency also has long recognized that ''any standard that was not economically or technologically feasible would *a fortiori* not be 'reasonably necessary or appropriate' under the Act. See *Industrial Union Dep't* v. *Hodgson,* [499 F.2d 467, 478 (D.C. Cir. 1974)] ('Congress does not appear to have intended to protect

employees by putting their employers out of business.') [*American Textile Mfrs. Inst. Inc.*, 452 U.S. at 513 n. 31 (a standard is economically feasible even if it portends ''disaster for some marginal firms,'' but it is economically infeasible if it ''threaten[s] massive dislocation to, or imperil[s] the existence of,'' the industry)].''

By stating the test in terms of ''threat'' and ''peril,'' the Supreme Court made clear in *ATMI* that economic infeasibility begins short of industry-wide bankruptcy. OSHA itself has placed the line considerably below this level. (See for example, *ATMI*, 452 U.S. at 527 n. 50; 43 FR 27,360 (June 23, 1978). Proposed 200 μg/m3 PEL for cotton dust did not raise serious possibility of industry-wide bankruptcy, but impact on weaving sector would be severe, possibly requiring reconstruction of 90 percent of all weave rooms. OSHA concluded that the 200 μg/m3 level was not feasible for weaving and that 750 μg/m3 was all that could reasonably be required). See also 54 FR 29,245–246 (July 11, 1989); *American Iron & Steel Institute*, 939 F.2d at 1003. OSHA raised the engineering control level for lead in small nonferrous foundries to avoid the possibility of bankruptcy for about half of small foundries even though the industry as a whole could have survived the loss of small firms.) Although the cotton dust and lead rulemakings involved health standards, the economic feasibility ceiling established therein applies equally to safety standards. Indeed, because feasibility is a necessary element of a ''reasonably necessary or appropriate'' standard, this ceiling boundary is the same for health and safety rulemaking since it comes from section 3(8), which governs all permanent OSHA standards.

All OSHA standards must also be cost-effective in the sense that the protective measures being required must be the least expensive measures capable of achieving the desired end (*ATMI*, at 514 n. 32; *Building and Constr. Trades Dep't AFL-CIO* v. *Brock*, 838 F.2d 1258, 1269 (D.C. Cir. 1988)). OSHA gives additional consideration to financial impact in setting the period of time that should be allowed for compliance allowing as much as ten years for compliance phase-in. (See *United Steelworkers of Am.* v. *Marshall*, 647 F.2d 1189, 1278 (D.C. Cir. 1980), *cert. denied*, 453 U.S. 913 (1981).) Additionally, OSHA's enforcement policy takes account of financial hardship on an individualized basis. OSHA's Field Operations Manual provides that, based on an employer's economic situation, OSHA may extend the period within which a violation must be corrected after issuance of a citation (CPL. 2.45B, Chapter III, paragraph E6d(3)(a), Dec. 31, 1990).

To reach the necessary findings and conclusions that a safety standard substantially reduces a significant risk of harm, is both technologically and economically feasible, and is cost effective, OSHA must conduct rulemaking in accord with the requirements of section 6 of the OSH Act. The regulatory proceeding allows it to determine the qualitative and, if possible, the quantitative nature of the risk with and without regulation, the technological feasibility of compliance, the availability of capital to the industry and the extent to which that capital is required for other purposes, the industry's profit history, the industry's ability to absorb costs or pass them on to the consumer, the impact of higher costs on demand, and the impact on competition with substitutes and imports. (See *ATMI* at 2501–2503; *American Iron & Steel Institute* generally.)

Finally, general principles of administrative law require the Agency to justify significant departures from prior practice. (See *International Union, UAW* v. *Pendergrass*, 878 F.2d 389, 400 (D.C. 1989)). In the twenty years since enactment of the OSH Act, OSHA has promulgated numerous safety standards—standards that provide benchmarks for judging risks, benefits, and feasibility of compliance in subsequent rulemakings. (OSHA's Hazardous Waste Operations and Emergency Response Standard, for example, required use of existing technology and well accepted safety practices to eliminate at least 32 deaths and 18,700 lost workday injuries at a cost of about $153 million per year (54 FR 9311–9312; March 6, 1989). The Excavation standard also drew on existing technology and recognized safety practices to save 74 lives and over 800 lost workday injuries annually at a cost of about $306 million. (54 FR 45,954; Oct. 31, 1989). OSHA's Grain Handling Facilities standard relied primarily on simple housekeeping measures to save 18 lives and 394 injuries annually, at a total net cost of $5.9 to $33.4 million (52 FR 49,622; Dec. 31, 1991).)

B. The proposed amendment to the standard for the training of powered industrial truck operators and the promulgation of like requirements for the construction and maritime industries complies with the statutory criteria described above.

As explained in Section I, *Background*, Section II, *The Powered Industrial Truck*, Section III, *Powered Industrial Truck Hazards*, Section IV, *Accident, Injury and Other Data*, and Section V, *Basis for Agency Action*, earlier in this preamble, and in Section IX, *Summary of the Regulatory Impact and Regulatory Flexibility Analysis and Environmental Impact Assessment*, later in this preamble, OSHA has determined that the operation of powered industrial trucks by untrained or inadequately trained operators pose significant risks to employees. There have been on average 85 fatalities, 34,900 serious injuries and 61,800 non-serious injuries annually since 1981 due to unsafe powered industrial truck operation. OSHA estimates that compliance with the revised training requirement for powered industrial truck operator will reduce the risk of hazards to those operators and other employees by 25 percent (preventing 17 to 22 fatalities, 10,898 to 14,118 serious injuries and 15,450 non-serious injuries annually). This constitutes a substantial reduction of significant risk of material harm.

The Agency believes that compliance is technologically feasible because there exists a current rule for the training of powered industrial truck operators and the revised regulation specifies in more detail what is to be taught to those operators, and requires the employer to institute effective supervisory measures to ensure continued safe operation of those vehicles. In many companies, the training of vehicle operators and the subsequent supervisory measures required by the standard have already been implemented.

Additionally, OSHA believes that compliance is economically feasible, because, as documented by the Regulatory Impact Analysis, all regulated sectors can readily absorb or pass on compliance costs.

The standard's costs, benefits, and compliance requirements are reasonable, amounting to approximately 34.9 million in the first year and 19.4 million per year thereafter, preventing 17 to 22 fatalities, 10,898 to 14,118 serious injuries and 15,450 non-serious injuries per year. As explained above, using another definition, OSHA estimates that it will eliminate between 11,968 and 15,504 lost workday injuries in addition to the fatalities prevented. These percentages are consistent with those of other OSHA safety standards.

C. The requirement for the training of powered industrial truck operators is necessary to address the significant risks of material harm posed by the operation of those vehicles.

OSHA believes that Section I, *Background*, Section II, *The Powered Industrial Truck*, Section III, *Powered*

Industrial Truck Hazards, Section IV, *Accident, Injury and Other Data*, and Section V, *Basis for Agency Action*, earlier in this preamble have clearly and comprehensively set out the Agency's bases for concluding that the operation of powered industrial trucks by untrained or inadequately trained employees pose significant risks and that the training of those operators is reasonably necessary to protect affected employees from those risks. In particular, as detailed in Section IX, *Preliminary Regulatory Impact and Regulatory Flexibility Analysis and Environmental Impact Assessment*, later in this preamble, OSHA estimates that the improper operation of powered industrial trucks causes 85 fatalities, 34,902 serious injuries, and 61,800 non-serious injuries annually, and that revision of and compliance with the requirements of the OSHA standard for the training of powered industrial truck operators will reduce the risk of fatality and injury by 25 percent (preventing 17 to 22 fatalities, 10,898 to 14,118 serious injuries and 15,450 non-serious injuries).

OSHA emphasizes that its risk assessment is based on employee exposure to the hazards of the operation of powered industrial trucks, hazards that exists in a large range of industries. Although Section IX, *Preliminary Regulatory Impact and Regulatory Flexibility Analysis and Environmental Impact Assessment*, later in this preamble, presents OSHA's estimate of the costs and benefits of the revision of the training requirement in terms of the Standard Industrial Classification (SIC) codes for the industries regulated, OSHA does not believe that the risk associated with these hazards vary according to what SIC code a vehicle may be operated in. Thus, some of the industry categories within the scope of the final rule that will have compliance costs have had few or no documented powered industrial truck accidents or injuries or fatalities during the period covered by the PRIA. In this case, OSHA has considered developing a scope of the rule to cover those situations it has determined to be hazardous. As explained more fully below, OSHA has determined that the lack of prior documented injuries and deaths in some SIC Codes does not indicate that the employees in those industries are not exposed to significant risks from the unsafe operation of powered industrial trucks. As the summary of the PRIA explains in detail, OSHA has determined that it is appropriate to include those industries within the scope of the standard because employees in those industries are exposed to the same kinds of hazards as employees in industries for which there are reported injuries and fatalities.

Even in industry sectors in which no injuries or fatalities have been reported, the Agency believes there is sufficient information for OSHA to determine that employees who work in areas in which powered industrial trucks are operated or operate those vehicles face significant risks, based on analysis of the elements of the hazards identified and of the similarity of hazard elements between industry sectors. Therefore, the Agency has determined that all employees who operate those vehicles or work in areas in which those vehicles are operated face a significant risk of material harm and that compliance with the powered industrial truck standard is reasonably necessary to protect affected employees from those risks, regardless of the number of accidents and injuries reported for the SIC code to which the employer has been assigned.

Also, because of the difficulties the Agency has experienced in compiling a database for powered industrial truck accidents, injuries or fatalities may have occurred in industries, including those for which no incidents have been documented, without being recorded. In addition, the SIC code-based organization of incident data may mask actual or potential hazards of the operation of powered industrial trucks because, while a business is classified for SIC purposes according to its principal activity, the workplace may also contain warehousing areas where materials are stored as a ''secondary'' purpose, that have necessitated the use of powered industrial trucks with their resultant injuries or fatalities. For example, a new car dealer would be classified under the new car dealer SIC, even though the dealer may store a large number of auto accessories, such as tires and batteries. In many instances, large quantities of items like batteries are palletized for ease of handling. When these pallets of material are delivered to the dealer, the items are either removed from the pallet and handling manually, or the pallet and the material are moved with some type of powered industrial truck, such as a pallet jack. Although the workplace is a new car dealer, a powered industrial truck is in use and an accident would have nothing to do with selling new cars. Therefore, OSHA believes, based on the limitations of the accident data and the circumstantial nature of many vehicle accidents, that it is appropriate to require that employers protect affected employees from the hazards of vehicle operations in all workplaces where powered industrial trucks are used, rather than to characterize workplaces according to the injury or fatality experience of the SIC codes in which they have been classified.

The Agency also notes that many accidents that occur as a result of powered industrial truck operations are not classified as an accident involving a truck. For example, if a powered industrial truck is used to lift an employee who is standing on the forks of the vehicle and the employee falls from those forks while aloft, the accident could be classified as a fall from height or a fall from an elevated platform. In both instances, the fact that the employee was unsafely taken aloft on the forks of a powered industrial truck and fell from those forks is not transferred to the accident report because the accident was attributed to other causes.

Finally, it is well established in the OSH Act enforcement context that the lack of injuries or deaths to a particular employer's employees does not establish that the employees are not exposed to a hazard. In a frequently quoted passage, the Fifth Circuit long ago observed that ''the goal of the Act is to prevent the first accident, not to serve as a source of consolation for the first victim or his survivors'' *(Mineral Industries & Heavy Construction Group* v. *OSHRC*, 639 F.2d 1289, 1294 (5th Cir. 1981)). This principle applies to regulatory actions as well. Once the agency determines that exposure to a particular condition constitutes a significant risk, it need not repeat that analysis for every situation or type of workplace in which the condition is found.

In addition, those segments with fewer trucks and, consequently fewer accidents, will have lower costs for training and evaluation. However, the risk to each individual operator for each year of operation is approximately the same as in industries with more trucks and operators. This approach was upheld in *International Union, UAW,* v. *OSHA*, —F. 2d—, (D.C. Circ., October 21, 1994)

For all of the foregoing reasons, OSHA has determined that it is inappropriate to exclude any of the SICs merely because they have not recently had documented powered industrial truck injuries or fatalities, insofar as those SICs contain workplaces where those vehicles are operated.

D. Conclusion

OSHA has determined that the powered industrial truck standard, like other safety standards, is subject to the constraints of section 3(8) of the OSH

Act, that the standard is ''reasonably necessary or appropriate to provide safe or healthful employment and places of employment.'' But the standard is not subject to the section 6(b)(5) requirement that it limit significant risk ''to the extent feasible.''

The Agency believes that the use of powered industrial trucks in the workplace by untrained or poorly trained employees poses significant risks and that the need to require that only properly trained employees operate those vehicles is reasonably necessary to protect affected employees from those risks. OSHA also has determined that compliance with the standard for the training of those operators is technologically feasible because many companies offer the type training that the standard would require. In addition, OSHA believes that compliance is economically feasible, because, as documented by the Preliminary Regulatory Impact Analysis (Ex. 2), all regulated sectors can readily absorb or pass on initial compliance costs and economic benefits will ultimately exceed compliance costs. In particular, the Agency believes that compliance with the powered industrial truck training requirement will result in substantial cost savings and productivity gains at facilities that utilize powered industrial trucks that might otherwise be disrupted by accidents and injuries.

As detailed in the Summary of the Preliminary Regulatory Impact Analysis, the standard's costs, benefits, and compliance requirements are consistent with those of other OSHA safety standards. For example, the Hazardous Waste Operations and Emergency Response standard (29 CFR 1910.120) requires the use of existing technology and well accepted safety practices to eliminate at least 32 deaths and 18,700 lost workday injuries at a cost of about $153 million per year (54 FR 9311–9312; March 6, 1989). The Excavations standard (29 CFR 1926, Subpart P) also drew on existing technology and recognized safety practices to save 74 lives and over 800 lost workday injuries annually at a cost of about $306 million (54 FR 45,954; Oct. 31, 1989). Additionally, the Grain Handling Facilities standard (29 CFR 1910.272) relied primarily on simple housekeeping measures to save 18 lives and 394 injuries annually, at a total net cost of between $5.9 million and $33.4 million (52 FR 49,622; Dec. 31, 1987). Also, compliance with the planning, work practice, and training provisions of the Process Safety Management standard (29 CFR 1910.119) will reduce the risk of catastrophic fire and explosion (330 fatalities and 1917 injuries and illnesses annually) by 80 percent, at an annualized cost of $888.7 million in the first five years and at an annualized cost of $470.8 million in the following five years.

IX. Summary of the Preliminary Economic, Feasibility and Regulatory Flexibility Analyses and Environmental Impact Assessment

A. Introduction

Executive Order 12866 and the Regulatory Flexibility Act require Federal Agencies to analyze the costs, benefits and other consequences and impacts of proposed standards and final rules. Consistent with these requirements, OSHA has prepared a preliminary economic analysis for the proposed revisions to and adoption of the powered industrial truck operator training provisions which are proposed in this document.

This analysis includes a description of the industries that would be affected by the regulation, an assessment of the benefits attributable to adoption of the proposal, a determination of the technological feasibility of the proposed revisions, estimation of the costs of compliance, a determination of the economic feasibility of compliance with the proposed provisions, and an analysis of the economic and other impacts of this rulemaking. The Advisory Committee on Construction Safety and Health is currently reviewing the proposed rule for applicability to the construction industry and based on the Advisory Committee's recommendations, OSHA may extend the coverage of the proposed rule to this sector in the future.

Affected Industries

Using powered industrial truck sales data provided by the Industrial Truck Association (ITA), OSHA estimates that there are 822,831 industrial trucks in use in industries covered by the proposed standard. Industries with the largest number of powered industrial trucks include wholesale trade-non-durable goods (SIC 51) with an estimated 109,232 powered industrial trucks, and food and kindred products (SIC 20) with an estimated 71,275 such trucks.

The proposed OSHA revisions will cover workers who operate powered industrial trucks. This includes operators using these vehicles in the general industry and maritime sectors. The population-at-risk in powered industrial truck accidents consists primarily of the operators of these trucks. Operators of powered industrial trucks include workers employed as designated truck operators as well as those who might operate powered industrial truck as part of another job. These alternate users of powered industrial trucks include shipping and receiving clerks, order pickers, maintenance personnel, and general temporary workers. Non-driving workers such as warehousemen, materials handlers, laborers and pedestrians who work on or are present in the vicinity of powered industrial trucks are also injured or killed in powered industrial truck accidents. Estimates of the number of non-driving employees are not included in the population-at-risk numbers presented in this economic analysis. However, non-driving employees are included in the number of preventable fatal and non-fatal injuries estimated to be associated with compliance with the proposed rule.

OSHA estimates that approximately 1.2 million workers are employed as industrial truck operators in industries regulated by OSHA. Industries with the largest number of operators include wholesale trade (SIC 51) with 163,848 operators, and food and kindred products (SIC 20) with 106,913 operators.

Technological Feasibility

OSHA could not identify any requirement in the proposed standard that raises technological feasibility problems for establishments that use industrial trucks. On the contrary, there is substantial evidence that establishments can achieve compliance with all requirements using existing methods and equipment. In addition, the standard introduces no technological requirements of any type. Therefore, OSHA has preliminarily concluded that technological feasibility is not an issue for the proposed standard.

Costs of Compliance

The proposed OSHA industrial truck operator training standard would expand the initial training required by the existing standard to include information on the operating instructions and warnings appropriate to the type of truck used, the specific hazards in the workplace where the truck will be operated, and instructions pertaining to the requirements of the OSHA standard. Additionally, the proposed standard requires employers to monitor the performance of industrial truck operators through an annual evaluation and to provide remedial training when this evaluation suggests that such training is needed.

OSHA estimates that the first year cost of compliance with the proposed standard will be $34.9 million and that the annual cost of compliance thereafter will be $19.4 million. Table 12 outlines the annual costs by each sector affected by the proposed standard. Industry sectors with the highest estimated annualized compliance costs are manufacturing, with $9.8 million, and wholesale and retail trade with $5.6 million. Existing industry practice was taken into consideration when calculating costs, i.e., where employers have already voluntarily implemented practices that would be required by the proposed standard, no cost is attributed to the standard. OSHA welcomes comments on the preliminary costs and assumptions presented in this Preliminary Economic Analysis.

TABLE 12.—ESTIMATED ANNUALIZED COMPLIANCE COSTS FOR THE PROPOSED INDUSTRIAL TRUCK OPERATOR TRAINING STANDARD

Sector	Initial evaluation	Initial training	Monitoring	Remedial training	Total
Agriculture	$2,457	$28,637	$39,404	$2,251	$72,749
Mining [a]	1,109	12,923	17,778	1,016	32,825
Manufacturing	332,222	3,872,651	5,327,726	304,441	9,837,040
Transportation and Utilities	91,344	1,064,777	1,464,847	83,706	2,704,674
Wholesale and Retail Trade	189,193	2,205,396	3,034,033	173,373	5,601,996
Finance, Insurance, & Real Estate	2,607	30,389	41,807	2,389	77,192
Services	37,477	436,859	601,001	34,343	1,109,679
Total	656,408	7,651,632	10,526,595	601,519	19,436,154

[a] Oil and gas extraction.

Note: Costs are annualized over 10 years at a 7 percent interest rate (annualization factor 0.1424).
Source: US Department of Labor, OSHA, Office of Regulatory Analysis, based on ERG [1, Section 3].

Benefits

An estimated 85 fatalities and 34,902 injuries result annually from industrial truck-related accidents. As presented in Table 13, OSHA estimates that full compliance with the proposed standard will prevent between 17 and 22 of these fatalities per year and between 10,898 and 14,118 lost workday injuries. These preventable fatalities and injuries are in addition to lives saved and injuries prevented by OSHA's existing standard.

The proposed standard will also reduce property damage and training-related litigation. OSHA's preliminary analysis of the impacts of improved training show reductions in property damage valued at an estimated $8 million to $42 million annually. In addition, OSHA estimates that approximately $770,018 will be saved annually in damages and settlements in court cases that would have been awarded as a result of injuries caused by deficiencies in industrial truck operator training.

TABLE 13.—NUMBER OF FATALITIES AND INJURIES PREVENTED BY COMPLIANCE WITH THE PROPOSED POWERED INDUSTRIAL TRUCK TRAINING STANDARD

Industry group	Total number of industrial truck fatalities	Preventable fatalities under proposed standard		Total number of industrial truck injuries	Preventable injuries under proposed standard	
		Low	High		Low	High
Forestry, Fishing and Agricultural Services	0	0	0	219	68	88
Mining—oil and gas extraction	1	0.2	0.3	84	26	34
Manufacturing	30	5.9	7.7	14,895	4,651	6,025
Transportation, communication, and utilities	20	3.9	5.1	4,265	1,332	1,725
Wholesale and retail trade	25	4.9	6.4	12,012	3,751	4,859
Finance, insurance, and real estate	0	0	0	212	66	86
Services	9	1.8	2.3	3,215	1,004	1,300
All industries	85	17	22	34,902	10,898	14,118

Source: U.S. Department of Labor, OSHA, Office of Regulatory Analysis, based on ERG Report (1, Section 4).

Economic Impacts and Regulatory Flexibility Analysis

OSHA assessed the potential economic impacts of compliance with the proposed standard and has preliminarily determined that the standard is economically feasible for all industry groups. Detailed information at the three-digit SIC level is presented in OSHA's Preliminary Economic Analysis. When an industry enjoys an inelastic demand for its products, an increase in operating costs can ordinarily be passed on to consumers. In this case, the maximum expected price increase is calculated by dividing the average estimated compliance cost in each industry by the average revenue for that industry. OSHA estimates that the average price increase would be negligible, about 0.0002 percent. Table 14 shows that the average price increase at the two-digit SIC level would be extremely small. (For impacts at the three-digit SIC level, see economic analysis, Table V–1). These estimates indicate that even if all costs were passed on to consumers through price increases, the proposed standard would have a negligible impact on prices overall.

Given the minuscule price increases necessary to cover the cost of the proposed training requirements, employers should be able to pass along compliance costs to customers. However, even if all costs were absorbed by the affected firms, the average

reduction in profits would be only 0.007 percent. As presented in Table 14, the largest potential decrease in profits—0.038 percent—would occur in SIC 51, Nondurable Goods. Because most firms will not find it necessary to absorb all of the costs from profits and should be able to pass most if not all of the standard's costs on to consumers, average profits are not expected to decline to the extent calculated here. OSHA, therefore, does not expect the revised standard to have a significant economic impact on affected firms or industries.

TABLE 14.—ECONOMIC IMPACT OF THE PROPOSED POWERED INDUSTRIAL TRUCKS OPERATOR TRAINING STANDARD

	SIC/Industry sector	Value of industry shipments, receipts or sales ($ millions)	Annualized compliance costs	Compliance costs as a percent of sales	Pre-tax income ($ millions)	Compliance costs as a percent of pre-tax income
07	Agricultural services	NA	$72,749			
13	Mining—oil and gas extraction	$48,178	32,825	Negligible		
20	Food and kindred products	387,601	1,774,023	0.0005	36,213	0.005
21	Tobacco products	32,032	43,951	0.0001	(1)	(1)
22	Textile mill products	65,706	384,461	0.0006	5,102	0.008
23	Apparel and other textile products	65,345	109,656	0.0002	3,548	0.003
24	Lumber and wood products	70,569	415,093	0.0006	2,881	0.014
25	Furniture and fixtures	40,027	194,006	0.0005	1,942	0.010
26	Paper and allied products	128,824	760,042	0.0006	7,307	0.010
27	Printing, publishing, and allied industries	156,685	435,959	0.0003	13,171	0.003
28	Chemicals and allied products	292,326	931,407	0.0003	24,169	0.004
29	Petroleum refining and related industries	158,076	92,786	0.0001	11,193	0.001
30	Rubber and miscellaneous plastics products	100,668	522,973	0.0005	5,366	0.010
31	Leather and leather products	9,142	47,059	0.0005	(2)	(2)
32	Stone, clay, glass, and concrete products	59,611	396,003	0.0007	2,664	0.015
33	Primary metal industries	132,837	567,368	0.0004	3,133	0.018
34	Fabricated metal products	157,077	717,423	0.0005	7,660	0.009
35	Industrial and commercial machinery and computer equip	243,479	900,774	0.0004		
36	Electric and electronic equipment	197,880	492,784	0.0002	15,378	0.003
37	Transportation equipment	364,032	691,674	0.0002	1,916	0.036
38	Instruments and related equipment	127,160	141,176	0.0001	8,326	0.002
39	Miscellaneous manufacturing industries	37,131	218,423	0.0006	2,418	0.009
40	Railroad transportation	44,422	69,042	0.0002		
41	Local, suburban, and interurban passenger transit	8,094	51,782	0.0006		
42	Trucking and warehousing	110,103	1,800,849	0.0016		
44	Water transportation	18,336	105,655	0.0006		
45	Transportation by air	82,055	188,820	0.0002		
46	Pipelines, except natural gas	2,098	4,707	0.0002		
47	Transportation services	54,432	156,391	0.0003		
48	Communications	232,257	60,673	Negligible		
49	Electric, gas and sanitary services	292,280	266,754	0.0001		
50	Durable goods	981,208	1,335,982	0.0001	4,880	0.027
51	Nondurable goods	943,174	2,201,118	0.0002	5,831	0.038
52	Building materials and garden supplies	115,855	426,997	0.0004		
53	General merchandise stores	266,991	683,253	0.0003		
54	Food stores	392,400	690,815	0.0002		
55	Automatic dealers and service stations	587,890	67,212	Negligible		
56	Apparel and accessory stores	106,128	39,537	Negligible		
57	Furniture and home furnishings stores	113,673	136,581	0.0001		
58	Eating and drinking places	211,036	28,035	Negligible		
59	Miscellaneous retails	249,463	265,974	0.0001		
60	Banking	48,477	15,103	Negligible		
61	Credit agencies other than banks	69,148	6,293	Negligible		
62	Security and commodity brokers and services	41,226	5,034	Negligible		
63	Insurance carriers	521,036	27,269	Negligible		
64	Insurance agents, brokers, and services	31,623	2,937	Negligible		
65	Real estate	96,942	13,425	Negligible		
67	Holding and other investment offices	47,301	7,132	Negligible		
70	Hotels and other lodging places	64,630	13,486	Negligible		
72	Personal services	59,052	13,486	Negligible		
78	Motion pictures	43,838	17,164	Negligible		
79	Amusement and recreation services	51,107	25,746	Negligible		
80	Health services	285,040	72,743	Negligible		
81	Legal services	96,179	4,495	Negligible		
82	Educational services	4,617	64,569	0.0014		
83	Social services	68,312	22,068	Negligible		
84	Museums, art galleries, botanical and zoological gardens	3,551	1,226	Negligible		
86	Membership organizations	39,118	7,765	Negligible		
87	Engineering, accounting, research and management svcs	224,238	52,309	Negligible		
89	Miscellaneous services, n.e.c.	23,871	15,938	0.0001		

TABLE 14.—ECONOMIC IMPACT OF THE PROPOSED POWERED INDUSTRIAL TRUCKS OPERATOR TRAINING STANDARD—Continued

SIC/Industry sector	Value of industry shipments, receipts or sales ($ millions)	Annualized compliance costs	Compliance costs as a percent of sales	Pre-tax income ($ millions)	Compliance costs as a percent of pre-tax income
Totals	.....	19,436,154	0.0002	.....	0.007

[1] =included under SIC 20.
[2] =included under SIC 23.
Negligible denotes less than 0.00001 percent.
Source: US Department of Labor, OSHA, Office of Regulatory Analysis, based on ERG Report (1, Chapter 6).

In accordance with the Regulatory Flexibility Act of 1980 (5 U.S.C. 601 *et seq.*), OSHA has also analyzed the economic impact of the proposed standard on small establishments (19 or fewer employees), looking particularly for evidence that the rule would have a significant impact on a substantial number of small entities. Small businesses will incur lower compliance costs than larger businesses because the compliance costs depend directly on the number of industrial truck operators in a given facility. OSHA has preliminarily concluded that it would not have a significant impact upon a substantial number of small entities. Assuming a 15 percent turnover rate, compliance costs for a typical small business in public warehousing and storage (SIC 422) will be $1,188 in the first year and $280 annually thereafter. OSHA estimates that the average price impact for small establishments will not exceed 0.12 percent. Similarly, OSHA estimates that, if the average establishment could not pass any of these costs to its customers through this very small price increase (a highly unlikely scenario), the costs would impact average profits by less than 1.2 percent. These impacts are judged to be relatively minor; therefore, the proposed standard is economically feasible for small establishments.

XI. Environmental Assessment

The proposed rules have been reviewed in accordance with the requirements of the National Environmental Policy Act (NEPA) of 1969 (42 U.S.C. 4321 *et seq.*), the regulations of the Council of Environmental Quality (CEQ) (40 CFR part 1500), and DOL NEPA procedures (29 CFR part 11). The provision of the standard focuses on the reduction and avoidance of incidents involving powered industrial trucks. Consequently, no major negative impact is foreseen on air, water or soil quality, plant or animal life, the use of land or other aspects of the environment. Therefore, this revision is categorized as an excluded action according to subpart B, § 11.10 of the DOL NEPA regulations.

X. International Trade

This revision of the OSHA standards on powered industrial trucks and the promulgation of the same standard for other industries is not likely to have a significant effect on international trade because of the small magnitude of any price increase that would be required for passing forward compliance costs. As shown above, the maximum price increases generated from the proposed rule would be less that 1.0 percent for the majority of affected establishments. Further, none of the compliance requirements affect the demand for foreign-made safety equipment. It can be concluded, therefore, that there will be no measurable impacts on foreign trade.

XII. Federalism

This proposed regulation has been reviewed in accordance with Executive Order 12612 (52 FR 41685, October 30, 1987), regarding Federalism. This Order requires that agencies, to the extent possible, refrain from limiting state policy options, consult with states prior to taking any actions which would restrict state policy options, and take such actions only when there is clear constitutional authority and the presence of a problem of national scope. The Order provides for preemption of state law only if there is a clear Congressional intent for the Agency to do so. Any such preemption is to be limited to the extent possible.

Section 18 of the Occupational Safety and Health Act (OSH Act) expresses Congress' intent to preempt state laws relating to issues on which Federal OSHA has promulgated occupational safety and health standards. Under the OSH Act, a state can avoid preemption in issues covered by Federal standards only if it submits, and obtains Federal approval of, a plan for the development of such standards and their enforcement. Occupational safety and health standards developed by such Plan states must, among other things, be at least as effective in providing safe and healthful employment and places of employment as the Federal standards. When such standards are applicable to products distributed or used in interstate commerce they may not unduly burden commerce and must be justified by compelling local conditions.

The Federal proposed standard on powered industrial truck operator training addresses hazards that are not unique to any one state or region of the country. Nonetheless, states with occupational safety and health plans approved under section 18 of the OSH Act will be able to develop their own state standards to deal with any special problems which might be encountered in a particular state. Moreover, because this standard is written in general, performance-oriented terms, there is considerable flexibility for state plans to require, and for affected employers to use, methods of compliance which are appropriate to the working conditions covered by the standard.

In brief, this proposed rule addresses a clear national problem related to occupational safety and health in general industry. Those states which have elected to participate under section 18 of the OSH Act are not preempted by this standard, and will be able to address any special conditions within the framework of the Federal Act while ensuring that the state standards are at least as effective as their standard. State comments are invited on this proposal and will be fully considered prior to promulgation of a final rule.

XIII. Public Participation

Interested persons are requested to submit written data, views and arguments concerning this proposal. These comments must be postmarked by July 12, 1995, and submitted in quadruplicate to the Docket Office; Docket No. S–008, Room N2624; U.S. Department of Labor, Occupational Safety and Health Administration; 200

Constitution Ave., NW., Washington, DC 20210.

All written comments received within the specified comment period will be made a part of the record and will be available for public inspection and copying at the above Docket Office address.

Additionally, under section 6(b)(3) of the OSH Act and 29 CFR 1911.11, interested persons may file objections to the proposal and request an informal hearing. The objections and hearing requests should be submitted in quadruplicate to the Docket Office at the above address and must comply with the following conditions:

1. The objection must include the name and address of the objector;
2. The objections must be postmarked by July 12, 1995;
3. The objections must specify with particularity grounds upon which the objection is based;
4. Each objection must be separately numbered; and
5. The objections must be accompanied by a detailed summary of the evidence proposed to be adduced at the requested hearing.

Interested persons who have objections to various provisions or have changes to recommend may of course make those objections and their recommendations in their comments and OSHA will fully consider them. There is only need to file formal ''objections'' separately if the interested person requests a public hearing.

OSHA recognizes that there may be interested persons who, through their knowledge of safety or their experience in the operations involved, would wish to endorse or support certain provisions in the standard. OSHA welcomes such supportive comments, including any pertinent accident data or cost information which may be available, in order that the record of this rulemaking will present a balanced picture of the public response on the issues involved.

XIV. State Plan Standards

The 25 States with their own OSHA approved occupational safety and health plans must adopt a comparable standard within six months of the publication date of the final standard. These States are: Alaska, Arizona, California, Connecticut (for State and local government employees only), Hawaii, Indiana, Iowa, Kentucky, Maryland, Michigan, Minnesota, Nevada, New Mexico, New York (for State and local government employees only), North Carolina, Oregon, Puerto Rico, South Carolina, Tennessee, Utah, Vermont, Virginia, Virgin Island, Washington, and Wyoming. Until such time as a State standard is promulgated, Federal OSHA will provide interim enforcement assistance, as appropriate, in those States.

List of Subjects

29 CFR Part 1910

Motor vehicle safety, Occupational safety and health, Transportation.

29 CFR Part 1915

Motor vehicle safety, Occupational safety and health, Transportation, Vessels.

29 CFR Part 1917

Marine terminals, Motor vehicle safety, Occupational safety and health, Vessels.

29 CFR Part 1918

Longshoring, Motor vehicle safety, Occupational safety and health, Vessels.

XV. Authority

This document was prepared under the direction of Joseph A. Dear, Assistant Secretary of Labor for Occupational Safety and Health, U.S. Department of Labor, 200 Constitution Avenue, NW., Washington, DC 20210.

Accordingly, pursuant to section 4, 6(b), 8(c) and 8(g) of the Occupational Safety and Health Act of 1970 (29 U.S.C. 653, 655, 657), Secretary of Labor's Order No. 1–90 (55 FR 9033), and 29 CFR part 1911, it is proposed to amend 29 CFR parts 1910, 1915, 1917, 1918 and 1926 as set forth below.

Signed at Washington, DC, this 24th day of February, 1995.

Joseph A. Dear,

Assistant Secretary of Labor.

PART 1910—OCCUPATIONAL SAFETY AND HEALTH STANDARDS

1. The authority citation for subpart N of part 1910 would be revised to read as follows:

Authority: Secs. 4, 6, 8 of the Occupational Safety and Health Act of 1970 (29 U.S.C. 653, 655, 657); Secretary of Labor's Order No. 12–71 (36 FR 8754), 8–76 (41 FR 25059), 9–83 (48 FR 35736) or 1–90 (55 FR 9033), as applicable.

Section 1910.177 also issued under 5 U.S.C. 553 and 29 CFR part 1911.

Sections 1910.176, 1910.178, 1910.179, 1910.183, 1910.184, 1910.189, and 1910.190 also issued under 29 CFR part 1911.

2. Section 1910.178 would be amended by revising paragraph (l) and by adding appendices A and B at the end of the section to read as follows:

§ 1910.178 Powered industrial trucks.

* * * * *

(l) *Operator training.*

(1) *Operator qualifications.* (i) The employer shall ensure that each potential operator of a powered industrial truck is capable of performing the duties that are required of the job.

(ii) In determining operator qualifications, the employer shall ensure that each potential operator has received the training required by this paragraph (l), that each potential operator has been evaluated by a designated person while performing the required duties, and that each potential operator performs those operations competently.

(2) *Training program implementation.*

(i) The employer shall implement a training program and ensure that only trained drivers who have successfully completed the training program are allowed to operate powered industrial trucks. Exception: Trainees under the direct supervision of a designated person shall be allowed to operate a powered industrial truck provided the operation of the vehicle is conducted in an area where other employees are not near and the operation of the truck is under controlled conditions.

(ii) Training shall consist of a combination of classroom instruction (Lecture, discussion, video tapes, and/or conference) and practical training (demonstrations and practical exercises by the trainee).

(iii) All training and evaluation shall be conducted by a designated person who has the requisite knowledge, training and experience to train powered industrial truck operators and judge their competency.

(3) *Training program content.* Powered industrial truck operator trainees shall be trained in the following topics unless the employer can demonstrate that some of the topics are not needed for safe operation.

(i) Truck related topics.

(A) All operating instructions, warnings and precautions for the types of trucks the operator will be authorized to operate;

(B) Similarities to and differences from the automobile;

(C) Controls and instrumentation: location, what they do and how they work;

(D) Power plant operation and maintenance;

(E) Steering and maneuvering;

(F) Visibility (including restrictions due to loading);

(G) Fork and attachment adaption, operation and limitations of their utilization;

(H) Vehicle capacity;

(I) Vehicle stability;

(J) Vehicle inspection and maintenance;

(K) Refueling or charging, recharging batteries;

(L) Operating limitations; and

(M) Any other operating instruction, warning or precaution listed in the operator's manual for the type vehicle which the employee is being trained to operate.

(ii) Workplace related topics.

(A) Surface conditions where the vehicle will be operated;

(B) Composition of probable loads and load stability;

(C) Load manipulation, stacking, unstacking;

(D) Pedestrian traffic;

(E) Narrow aisles and other restricted places of operation;

(F) Operating in hazardous classified locations;

(G) Operating the truck on ramps and other sloped surfaces that could affect the stability of the vehicle;

(H) Other unique or potentially hazardous environmental conditions that exist or may exist in the workplace; and

(I) Operating the vehicle in closed environments and other areas where insufficient ventilation could cause a buildup of carbon monoxide or diesel exhaust.

(iii) The requirements of this section.

(4) *Evaluation and refresher or remedial training.*

(i) Sufficient evaluation and remedial training shall be conducted so that the employee retains and uses the knowledge, skills and ability needed to operate the powered industrial truck safely.

(ii) An evaluation of the performance of each powered industrial truck operator shall be conducted at least annually by a designated person.

(iii) Refresher or remedial training shall be provided when there is reason to believe that there has been unsafe operation, when an accident or a near-miss occurs or when an evaluation indicates that the operator is not capable of performing the assigned duties.

(5) *Certification.*

(i) The employer shall certify that each operator has received the training, has been evaluated as required by this paragraph, and has demonstrated competency in the performance of the operator's duties. The certification shall include the name of the trainee, the date of training, and the signature of the person performing the training and evaluation.

(ii) The employer shall retain the current training materials and course outline or the name and address of the person who conducted the training if it was conducted by an outside trainer.

(6) *Avoidance of Duplicative Training.*

(i) Each current truck operator who has received training in any of the elements specified in paragraph (l)(3) of this section for the types of trucks the employee is authorized to operate and the type workplace that the trucks are being operated in need not be retrained in those elements if the employer certifies in accordance with paragraph (l)(5)(i) of this section that the operator has been evaluated to be competent to perform those duties.

(ii) Each new truck operator who has received training in any of the elements specified in paragraph (l)(3) of this section for the types of trucks the employee will be authorized to operate and the type of workplace in which the trucks will be operated need not be retrained in those elements before initial assignment in the workplace if the employer has written documentation of the training and if the employee is evaluated pursuant to paragraph (l)(4) of this section to be competent.

Note to paragraph (l): Appendices A and B at the end of this section provide non-mandatory guidance to assist employers in implementing this paragraph (l).

* * * * *

Appendixes to 31910.178

Appendix A—Training of Powered Industrial Truck Operators

(Non-mandatory appendix to paragraph (l) of this section)

A–1. Operator Selection

A–1.1. Prospective operators of powered industrial trucks should be identified based upon their ability to be trained and accommodated to perform job functions that are essential to the operation of a powered industrial truck. Determination of the capabilities of a prospective operator to fulfill the demands of the job should be based upon the tasks that the job demands.

A–1.2. The employer should identify all the aspects of the job that the employee must meet/perform when doing his or her job. These aspects could include the level at which the employee must see and hear, the physical demands of the job, and the environmental extremes of the job.

A–1.3. One factor to be considered is the ability of the candidate to see and hear within reasonably acceptable limits. Included in the vision requirements are the ability to see at distance and peripherally. In certain instances, there also is a requirement for the candidate to discern different colors, primarily red, yellow and green.

A–1.4. The environmental extremes that might be demanded of a potential powered industrial truck operator include that ability of the person to work in areas of excessive cold or heat.

A–1.5. After an employee has been trained and appropriate accommodations have been made, the employer needs to determine whether the employee can safely perform the job.

A–2. The Method(s) of Training

A–2.1. Among the many methods of training are the lecture, conference, demonstration, test (written and/or oral) and the practical exercise. In most instances, a combination of these methods have been successfully used to train employees in the knowledge, skills and abilities that are essential to perform the job function that the employee is being trained to perform. To enhance the training and to make the training more understandable to the employee, employers and other trainers have used movies, slides, video tapes and other visual presentations. Making the presentation more understandable has several advantages including:

(1) The employees being trained remain more attentive during the presentation if graphical presentation are used, thereby increasing the effectiveness of the training;

(2) The use of visual presentations allows the trainer to ensure that the necessary information is covered during the training;

(3) The use of graphics makes better utilization of the training time by decreasing the need for the instructor to carry on long discussions about the instructional material; and

(4) The use of graphics during instruction provides greater retention by the trainees.

A–3. Training Program Content

A–3.1. Because each type (make and model) powered industrial truck has different operating characteristics, limitations and other unique features, an optimum employee training program for powered industrial truck operators must be based upon the type vehicles that the employee will be trained and authorized to operate. The training must also emphasize the features of the workplace which will affect the manner in which the vehicle must be operated. Finally, the training must include the general safety rules applicable to the operation of all powered industrial trucks.

A–3.2. Selection of the methods of training the operators has been left to the reasonable determination of the employer. Whereas some employees can assimilate instructional material while seated in a classroom, other employees may learn best by observing the conduct of operations (demonstration) and/or by

having to personally conduct the operations (practical exercise). In some instances, an employee can receive valuable instruction through the use of electronic mediums, such as the use of video tapes and movies. In most instances, a combination of the different training methods may provide the mechanism for providing the best training in the least amount of time. OSHA has specified at paragraph (l)(2)(ii) of this section that the training must consist of a combination classroom instruction and practical exercise. The use of both these modes of instruction is the only way of assuring that the trainee has received and comprehended the instruction and can utilize the information to safely operate a powered industrial truck.

A–4. Initial Training

A–4.1. The following is an outline of a generalized forklift operator training program:

(1) Characteristics of the powered industrial truck(s) the employee will be allowed to operate:

(a) Similarities to and differences from the automobile;

(b) Controls and instrumentation: location, what they do and how they work;

(c) Power plant operation and maintenance;

(d) Steering and maneuvering;

(e) Visibility;

(f) Fork and/or attachment adaption, operation and limitations of their utilization;

(g) Vehicle capacity;

(h) Vehicle stability;

(i) Vehicle inspection and maintenance;

(j) Refueling or charging, recharging batteries.

(k) Operating limitations.

(l) Any other operating instruction, warning or precaution listed in the operator's manual for the type vehicle which the employee is being trained to operate.

(2) The operating environment:

(a) Floor surfaces and/or ground conditions where the vehicle will be operated;

(b) Composition of probable loads and load stability;

(c) Load manipulation, stacking, unstacking;

(d) Pedestrian traffic;

(e) Narrow aisle and restricted place operation;

(f) Operating in classified hazardous locations;

(g) Operating the truck on ramps and other sloped surfaces which would affect the stability of the vehicle;

(h) Other unique or potentially hazardous environmental conditions which exist or may exist in the workplace.

(i) Operating the vehicle in closed environments and other areas where insufficient ventilation could cause a buildup of carbon monoxide or diesel exhaust.

(3) The requirements of this OSHA Standard.

A–5. Trainee Evaluation

A–5.1. The provisions of these proposed requirements specify that an employee evaluation be conducted both as part of the training and after completion of the training. The initial evaluation is useful for many reasons, including:

(1) the employer can determine what methods of instruction will produce a proficient truck operator with the minimum of time and effort;

(2) the employer can gain insight into the previous training that the trainee has received; and

(3) a determination can be made as to whether the trainee will be able to successfully operate a powered industrial truck. This initial evaluation can be completed by having the employee fill out a questionnaire, by an oral interview, or by a combination of these mechanisms. In many cases, answers received by the employee can be substantiated by contact with other employees or previous employers.

A–6. Refresher or Remedial Training

A–6.1. (The type information listed at paragraph A–6.2 of this appendix would be used when the training is more than an on-the-spot correction being made by a supervisor or when there have been multiple instances of on-the-spot corrections having to be made.) When an on-the-spot correction is used, the person making the correction should point out the incorrect manner of operation of the truck or other unsafe act being conducted, tell the employee how to do the operation correctly, and then ensure that the employee does the operation correctly.

A–6.2. The following items may be used when a more general, structured retraining program is utilized to train employees and eliminate unsafe operation of the vehicle:

(1) Common unsafe situations encountered in the workplace;

(2) Unsafe methods of operating observed or known to be used;

(3) The need for constant attentiveness to the vehicle, the workplace conditions and the manner in which the vehicle is operated.

A–6.3. Details about the above subject areas need to be expanded upon so that the operator receives all the information which is necessary for the safe operation of the vehicle. Insight into some of the specifics of the above subject areas may be obtained from the vehicle manufacturers' literature, the national consensus standards [e.g. the ANSI B56 series of standards (current revisions)] and this OSHA Standard.

Appendix B—Stability of Powered Industrial Trucks

(Non-mandatory appendix to paragraph (l) of this section)

B–1. Definitions

To understand the principle of stability, understanding definitions of the following is necessary:

Center of gravity is that point of an object at which all of the weight of an object can be considered to be concentrated.

Counterweight is the weight that is a part of the basic structure of a truck that is used to offset the weight of a load and to maximize the resistance of the vehicle to tipping over.

Fulcrum is the axis of rotation of the truck when it tips over.

Grade is the slope of any surface that is usually measured as the number of feet of rise or fall over a hundred foot horizontal distance (this measurement is designated as a percent).

Lateral stability is the resistance of a truck to tipping over sideways.

Line of action is an imaginary vertical line through the center of gravity of an object.

Load center is the horizontal distance from the edge of the load (or the vertical face of the forks or other attachment) to the line of action through the center of gravity of the load.

Longitudinal stability is the resistance of a truck to overturning forward or rearward.

Moment is the product of the weight of the object times the distance from a fixed point. In the case of a powered industrial truck, the distance is measured from the point that the truck will tip over to the line of action of the object. The distance is always measured perpendicular to the line of action.

Track is the distance between wheels on the same axle of a vehicle.

Wheelbase is the distance between the centerline of the front and rear wheels of a vehicle.

B–2. General

B–2.1. Stability determination for a powered industrial truck is not complicated once a few basic principles are understood. There are many factors that influence vehicle stability. Vehicle wheelbase, track, height and weight distribution of the load, and the location

of the counterweights of the vehicle (if the vehicle is so equipped), all contribute to the stability of the vehicle.

B–2.2. The ''stability triangle'', used in most discussions of stability, is not mysterious but is used to demonstrate truck stability in rather simple fashion.

B–3. Basic Principles

B–3.1. The determination of whether an object is stable is dependent on the moment of an object at one end of a system being greater than, equal to or smaller than the moment of an object at the other end of that system. This is the same principle on which a see saw or teeter-totter works, that is, if the product of the load and distance from the fulcrum (moment) is equal to the moment at the other end of the device, the device is balanced and it will not move. However, if there is a greater moment at one end of the device, the device will try to move downward at the end with the greater moment.

B–3.2. Longitudinal stability of a counterbalanced powered industrial truck is dependent on the moment of the vehicle and the moment of the load. In other words, if the mathematic product of the load moment (the distance is from the front wheels, the point about which the vehicle would tip forward) the system is balanced and will not tip forward. However, if the load-moment is greater than the vehicle-moment, the greater load-moment will force the truck to tip forward.

B–4. The Stability Triangle

B–4.1. Almost all counterbalanced powered industrial trucks have a three point suspension system, that is, the vehicle is supported at three points. This is true even if it has four wheels. The steer axle of most trucks is attached to the truck by means of a pivot pin in the center of the axle. This three point support forms a triangle called the stability triangle when the points are connected with imaginary lines. Figure 1 depicts the stability triangle.

BILLING CODE 4510–26–P

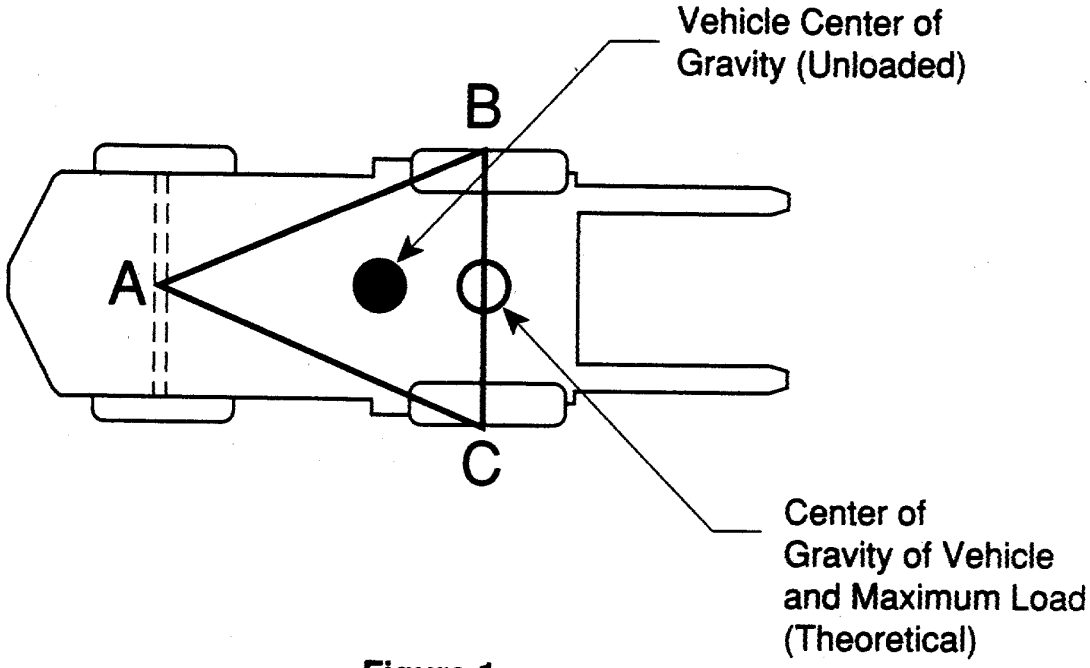

Figure 1.

NOTES:

1. When the vehicle is loaded, the combined center of gravity shifts toward line B-C. Theoretically the max load will result in the CG at the line B-C. In actual practice, the combined CG should never be at line B-C.

2. The addition of additional counterweight will cause the truck CG to shift toward point A and result in a truck that is less stable laterally.

BILLING CODE 4510–26–C

B–4.2. When the line of action of the vehicle or load-vehicle falls within the stability triangle, the vehicle is stable and will not tip over. However, when the line of action of the vehicle or the vehicle/load combination falls outside the stability triangle, the vehicle is unstable and may tip over. (See Figure 2.)

BILLING CODE 4510–26–P

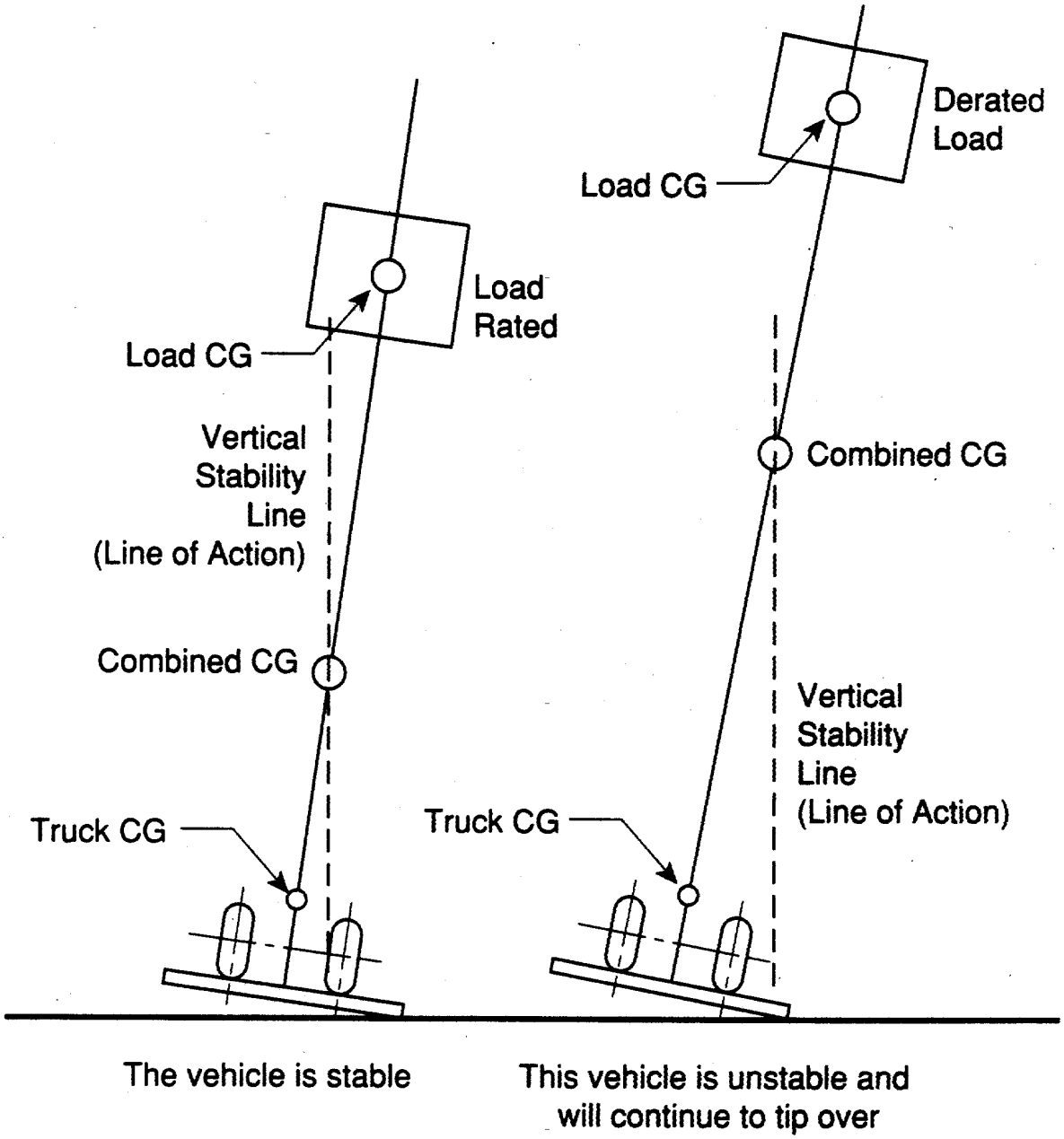

Figure 2.

BILLING CODE 4510–26–C

B–5. Longitudinal Stability

B–5.1. The axis of rotation when a truck tips forward is the point of contact of the front wheels of the vehicle with the pavement. When a powered industrial truck tips forward, it is this line that the truck will rotate about. When a truck is stable the vehicle-moment must exceed the load-moment. As long as the vehicle-moment is equal to or exceeds the load-moment, the vehicle will not tip over. On the other hand, if the load-moment slightly exceeds the vehicle-moment, the truck will begin the tip forward, thereby causing loss of steering control. If the load-moment greatly exceeds the vehicle-moment, the truck will tip forward.

B–5.2. In order to determine the maximum safe load moment, the truck manufacturer normally rates the truck at a maximum load at a given distance from the front face of the forks. The specified distance from the front face of the forks to the line of action of the load is commonly called a load center. Because larger trucks normally handle loads that are physically larger, these vehicles have greater load centers. A truck with a capacity of 30,000 pounds or less capacity is normally rated at a given load weight at a 24 inch load center. For trucks of greater than 30,000 pound capacity, the load center is normally rated at 36 or 48 inch load center distance. In order to safely operate the vehicle, the operator should always check the data plate and determine the maximum allowable weight at the rated load center.

B–5.3. Although the true load moment distance is measured from the front wheels, this distance is greater than the distance from the front face of the forks. Calculation of the maximum allowable load moment using the load center distance always provides a lower load moment than the truck was designed to handle. When handling unusual loads, such as those that are larger than 48 inches long (the center of gravity is greater than 24 inches), with an offset center of gravity, etc., then calculation of a maximum allowable load moment should be undertaken and this value used to determine whether a load can be handled. For example, if an operator is operating a 3,000 pound capacity truck (with a 24 inch load center), the maximum allowable load moment is 72,000 inch-pounds (3,000 times 24). If a probable load is 60 inches long (30 inch load center), then the maximum weight that this load can weigh is 2,400 pounds (72,000 divided by 30).

B–6. Lateral Stability

B–6.1. The lateral stability of a vehicle is determined by the position of the line of action (a vertical line that passes through the combined center of gravity of the vehicle and the load) relative to the stability triangle. When the vehicle is not loaded, the location of the center of gravity of the truck is the only factor to be considered in determining the stability of the truck. As long as the line of action of the combined center of gravity of the vehicle and the load falls within the stability triangle, the truck is stable and will not tip over. However, if the line of action falls outside the stability triangle, the truck is not stable and may tip over.

B–6.2. Factors that affect the lateral stability of a vehicle include the placement of the load on the truck, the height of the load above the surface on which the vehicle is operating, and the degree of lean of the vehicle.

B–7. Dynamic Stability

B–7.1. Up to this point, we have covered stability of a powered industrial truck without consideration of the dynamic forces that result when the vehicle and load are put into motion. The transfer of weight and the resultant shift in the center of gravity due to the dynamic forces created when the machine is moving, braking, cornering, lifting, tilting, and lowering loads, etc., are important stability considerations.

B–7.2. When determining whether a load can be safely handled, the operator should exercise extra caution when handling loads that cause the vehicle to approach its maximum design characteristics. For example, if an operator must handle a maximum load, the load should be carried at the lowest position possible, the truck should be accelerated slowly and evenly, and the forks should be tilted forward cautiously. However, no precise rules can be formulated to cover all of these eventualities.

PART 1915—OCCUPATIONAL SAFETY AND HEALTH STANDARDS FOR SHIPYARD EMPLOYMENT

3. The authority citation for part 1915 would be revised to read as follows:

Authority: Section 41, Longshore and Harbor Workers' Compensation Act (33 U.S.C. 941); secs. 4, 6, 8, Occupational Safety and Health Act of 1970 (29 U.S.C. 653, 655, 657); Secretary of Labor's Order No. 12–71 (36 FR 8754), 8–76 (41 FR 25059), 9–83 (48 FR 35736) or 1–90 (55 FR 9033), as applicable.

Sections 1915.120 and 1915.152 also issued under 29 CFR part 1911.

4. A new § 1915.120 with appendices A and B would be added to subpart G to read as follows:

§ 1915.120 Powered industrial trucks.

(a) *Operator training.* (1) Operator qualifications. (i) The employer shall ensure that each potential operator of a powered industrial truck is capable of performing the duties that are required of the job.

(ii) In determining operator qualifications, the employer shall ensure that each potential operator has received the training required by this paragraph, that each potential operator has been evaluated by a designated person while performing the required duties, and that each potential operator performs those operations competently.

(2) *Training program implementation.*

(i) The employer shall implement a training program and ensure that only trained drivers who have successfully completed the training program are allowed to operate powered industrial trucks. Exception: Trainees under the direct supervision of a designated person shall be allowed to operate a powered industrial truck provided the operation of the vehicle is conducted in an area where other employees are not near and the operation of the truck is under controlled conditions.

(ii) Training shall consist of a combination of classroom instruction (Lecture, discussion, video tapes, and/or conference) and practical training (demonstrations and practical exercises by the trainee).

(iii) All training and evaluation shall be conducted by a designated person who has the requisite knowledge, training and experience to train powered industrial truck operators and judge their competency.

(3) *Training program content.* Powered industrial truck operator trainees shall be trained in the following topics unless the employer can demonstrate that some of the topics are not needed for safe operation.

(i) Truck related topics.

(A) All operating instructions, warnings and precautions for the types of trucks the operator will be authorized to operate;

(B) Similarities to and differences from the automobile;

(C) Controls and instrumentation: location, what they do and how they work;

(D) Power plant operation and maintenance;

(E) Steering and maneuvering;

(F) Visibility (including restrictions due to loading);

(G) Fork and attachment adaption, operation and limitations of their utilization;

(H) Vehicle capacity;
(I) Vehicle stability;
(J) Vehicle inspection and maintenance;
(K) Refueling or charging, recharging batteries;
(L) Operating limitations; and
(M) Any other operating instruction, warning or precaution listed in the operator's manual for the type vehicle which the employee is being trained to operate.
(ii) Workplace related topics.
(A) Surface conditions where the vehicle will be operated;
(B) Composition of probable loads and load stability;
(C) Load manipulation, stacking, unstacking;
(D) Pedestrian traffic;
(E) Narrow aisles and other restricted places of operation;
(F) Operating in hazardous classified locations;
(G) Operating the truck on ramps and other sloped surfaces that could affect the stability of the vehicle;
(H) Other unique or potentially hazardous environmental conditions that exist or may exist in the workplace; and
(I) Operating the vehicle in closed environments and other areas where insufficient ventilation could cause a buildup of carbon monoxide or diesel exhaust.
(iii) The requirements of this section.
(4) *Evaluation and refresher or remedial training.*
(i) Sufficient evaluation and remedial training shall be conducted so that the employee retains and uses the knowledge, skills and ability needed to operate the powered industrial truck safely.
(ii) An evaluation of the performance of each powered industrial truck operator shall be conducted at least annually by a designated person.
(iii) Refresher or remedial training shall be provided when there is reason to believe that there has been unsafe operation, when an accident or a near-miss occurs or when an evaluation indicates that the operator is not capable of performing the assigned duties.
(5) *Certification.*
(i) The employer shall certify that each operator has received the training, has been evaluated as required by this paragraph, and has demonstrated competency in the performance of the operator's duties. The certification shall include the name of the trainee, the date of training, and the signature of the person performing the training and evaluation.
(ii) The employer shall retain the current training materials and course outline or the name and address of the person who conducted the training if it was conducted by an outside trainer.
(6) *Avoidance of duplicative training.*
(i) Each current truck operator who has received training in any of the elements specified in paragraph (a)(3) of this section for the types of trucks the employee is authorized to operate and the type workplace that the trucks are being operated in need not be retrained in those elements if the employer certifies in accordance with paragraph (a)(5)(i) of this section that the operator has been evaluated to be competent to perform those duties.
(ii) Each new truck operator who has received training in any of the elements specified in paragraph (a)(3) of this section for the types of trucks the employee will be authorized to operate and the type of workplace in which the trucks will be operated need not be retrained in those elements before initial assignment in the workplace if the employer has written documentation of the training and if the employee is evaluated pursuant to paragraph (a)(4) of this section to be competent.
(b) [Reserved]

Appendixes to § 1915.120

Appendix A—Training of Powered Industrial Truck Operators

(Non-mandatory appendix to paragraph (a) of this section)

A–1. Operator Selection

A–1.1. Prospective operators of powered industrial trucks should be identified based upon their ability to be trained and accommodated to perform job functions that are essential to the operation of a powered industrial truck. Determination of the capabilities of a prospective operator to fulfill the demands of the job should be based upon the tasks that the job demands.

A–1.2. The employer should identify all the aspects of the job that the employee must meet/perform when doing his or her job. These aspects could include the level at which the employee must see and hear, the physical demands of the job, and the environmental extremes of the job.

A–1.3. One factor to be considered is the ability of the candidate to see and hear within reasonably acceptable limits. Included in the vision requirements are the ability to see at distance and peripherally. In certain instances, there also is a requirement for the candidate to discern different colors, primarily red, yellow and green.

A–1.4. The environmental extremes that might be demanded of a potential powered industrial truck operator include that ability of the person to work in areas of excessive cold or heat.

A–1.5. After an employee has been trained and appropriate accommodations have been made, the employer needs to determine whether the employee can safely perform the job.

A–2. The Method(s) of Training

A–2.1. Among the many methods of training are the lecture, conference, demonstration, test (written and/or oral) and the practical exercise. In most instances, a combination of these methods have been successfully used to train employees in the knowledge, skills and abilities that are essential to perform the job function that the employee is being trained to perform. To enhance the training and to make the training more understandable to the employee, employers and other trainers have used movies, slides, video tapes and other visual presentations. Making the presentation more understandable has several advantages including:

(1) The employees being trained remain more attentive during the presentation if graphical presentation are used, thereby increasing the effectiveness of the training;
(2) The use of visual presentations allows the trainer to ensure that the necessary information is covered during the training;
(3) The use of graphics makes better utilization of the training time by decreasing the need for the instructor to carry on long discussions about the instructional material; and
(4) The use of graphics during instruction provides greater retention by the trainees.

A–3. Training Program Content

A–3.1. Because each type (make and model) powered industrial truck has different operating characteristics, limitations and other unique features, an optimum employee training program for powered industrial truck operators must be based upon the type vehicles that the employee will be trained and authorized to operate. The training must also emphasize the features of the workplace which will affect the manner in which the vehicle must be operated. Finally, the training must include the general safety rules applicable to the operation of all powered industrial trucks.

A–3.2. Selection of the methods of training the operators has been left to the reasonable determination of the employer. Whereas some employees can assimilate instructional material while seated in a classroom, other employees may learn best by observing the conduct of operations (demonstration) and/or by

having to personally conduct the operations (practical exercise). In some instances, an employee can receive valuable instruction through the use of electronic mediums, such as the use of video tapes and movies. In most instances, a combination of the different training methods may provide the mechanism for providing the best training in the least amount of time. OSHA has specified at paragraph (a)(2)(ii) of this section that the training must consist of a combination classroom instruction and practical exercise. The use of both these modes of instruction is the only way of assuring that the trainee has received and comprehended the instruction and can utilize the information to safely operate a powered industrial truck.

A–4. Initial Training

A–4.1. The following is an outline of a generalized forklift operator training program:

(1) Characteristics of the powered industrial truck(s) the employee will be allowed to operate:

(a) Similarities to and differences from the automobile;

(b) Controls and instrumentation: location, what they do and how they work;

(c) Power plant operation and maintenance;

(d) Steering and maneuvering;

(e) Visibility;

(f) Fork and/or attachment adaption, operation and limitations of their utilization;

(g) Vehicle capacity;

(h) Vehicle stability;

(i) Vehicle inspection and maintenance;

(j) Refueling or charging, recharging batteries;

(k) Operating limitations;

(l) Any other operating instruction, warning or precaution listed in the operator's manual for the type vehicle which the employee is being trained to operate.

(2) The operating environment:

(a) Floor surfaces and/or ground conditions where the vehicle will be operated;

(b) Composition of probable loads and load stability;

(c) Load manipulation, stacking, unstacking;

(d) Pedestrian traffic;

(e) Narrow aisle and restricted place operation;

(f) Operating in classified hazardous locations;

(g) Operating the truck on ramps and other sloped surfaces which would affect the stability of the vehicle;

(h) Other unique or potentially hazardous environmental conditions which exist or may exist in the workplace;

(i) Operating the vehicle in closed environments and other areas where insufficient ventilation could cause a buildup of carbon monoxide or diesel exhaust.

(3) The requirements of this OSHA Standard.

A–5. Trainee Evaluation

A–5.1. The provisions of these proposed requirements specify that an employee evaluation be conducted both as part of the training and after completion of the training. The initial evaluation is useful for many reasons, including:

(1) the employer can determine what methods of instruction will produce a proficient truck operator with the minimum of time and effort;

(2) the employer can gain insight into the previous training that the trainee has received; and

(3) a determination can be made as to whether the trainee will be able to successfully operate a powered industrial truck. This initial evaluation can be completed by having the employee fill out a questionnaire, by an oral interview, or by a combination of these mechanisms. In many cases, answers received by the employee can be substantiated by contact with other employees or previous employers.

A–6. Refresher or Remedial Training

A–6.1. (The type information listed at paragraph A–6.2 of this appendix would be used when the training is more than an on-the-spot correction being made by a supervisor or when there have been multiple instances of on-the-spot corrections having to be made.) When an on-the-spot correction is used, the person making the correction should point out the incorrect manner of operation of the truck or other unsafe act being conducted, tell the employee how to do the operation correctly, and then ensure that the employee does the operation correctly.

A–6.2. The following items may be used when a more general, structured retraining program is utilized to train employees and eliminate unsafe operation of the vehicle:

(1) Common unsafe situations encountered in the workplace;

(2) Unsafe methods of operating observed or known to be used;

(3) The need for constant attentiveness to the vehicle, the workplace conditions and the manner in which the vehicle is operated.

A–6.3. Details about the above subject areas need to be expanded upon so that the operator receives all the information which is necessary for the safe operation of the vehicle. Insight into some of the specifics of the above subject areas may be obtained from the vehicle manufacturers' literature, the national consensus standards [e.g. the ANSI B56 series of standards (current revisions)] and this OSHA Standard.

Appendix B—Stability of Powered Industrial Trucks

(Non-mandatory appendix to paragraph (a) of this section)

B–1. Definitions

To understand the principle of stability, understanding definitions of the following is necessary:

Center of Gravity is that point of an object at which all of the weight of an object can be considered to be concentrated.

Counterweight is the weight that is a part of the basic structure of a truck that is used to offset the weight of a load and to maximize the resistance of the vehicle to tipping over.

Fulcrum is the axis of rotation of the truck when it tips over.

Grade is the slope of any surface that is usually measured as the number of feet or rise of fall over a hundred foot horizontal distance (this measurement is designated as a percent).

Lateral stability is the resistance of a truck to tipping over sideways.

Line of action is a imaginary vertical line through the center of gravity of an object.

Load center is the horizontal distance from the edge of the load (or the vertical face of the forks or other attachment) to the line of action through the center of gravity of the load.

Longitudinal stability is the resistance of a truck to overturning forward or rearward.

Moment is the product of the weight of the object times the distance from a fixed point. In the case of a powered industrial truck, the distance is measured from the point that the truck will tip over to the line of action of the object. The distance is always measured perpendicular to the line of action.

Track is the distance between wheels on the same axle of a vehicle.

Wheelbase is the distance between the centerline of the front and rear wheels of a vehicle.

B–2. General

B–2.1. Stability determination for a powered industrial truck is not complicated once a few basic principles are understood. There are many factors that influence vehicle stability. Vehicle wheelbase, track, height and weight distribution of the load, and the location

of the counterweights of the vehicle (if the vehicle is so equipped), all contribute to the stability of the vehicle.

B–2.2. The ''stability triangle'', used in most discussions of stability, is not mysterious but is used to demonstrate truck stability in rather simple fashion.

B–3. Basic Principles

B–3.1. The determination of whether an object is stable is dependent on the moment of an object at one end of a system being greater than, equal to or smaller than the moment of an object at the other end of that system. This is the same principle on which a see saw or teeter-totter works, that is, if the product of the load and distance from the fulcrum (moment) is equal to the moment at the other end of the device, the device is balanced and it will not move. However, if there is a greater moment at one end of the device, the device will try to move downward at the end with the greater moment.

B–3.2. Longitudinal stability of a counterbalanced powered industrial truck is dependent on the moment of the vehicle and the moment of the load. In other words, if the mathematic product of the load moment (the distance is from the front wheels, the point about which the vehicle would tip forward) the system is balanced and will not tip forward. However, if the load-moment is greater than the vehicle-moment, the greater load-moment will force the truck to tip forward.

B–4. The Stability Triangle

B–4.1. Almost all counterbalanced powered industrial trucks have a three point suspension system, that is, the vehicle is supported at three points. This is true even if it has four wheels. The steer axle of most trucks is attached to the truck by means of a pivot pin in the center of the axle. This three point support forms a triangle called the stability triangle when the points are connected with imaginary lines. Figure 1 depicts the stability triangle.

BILLING CODE 4510–26–P

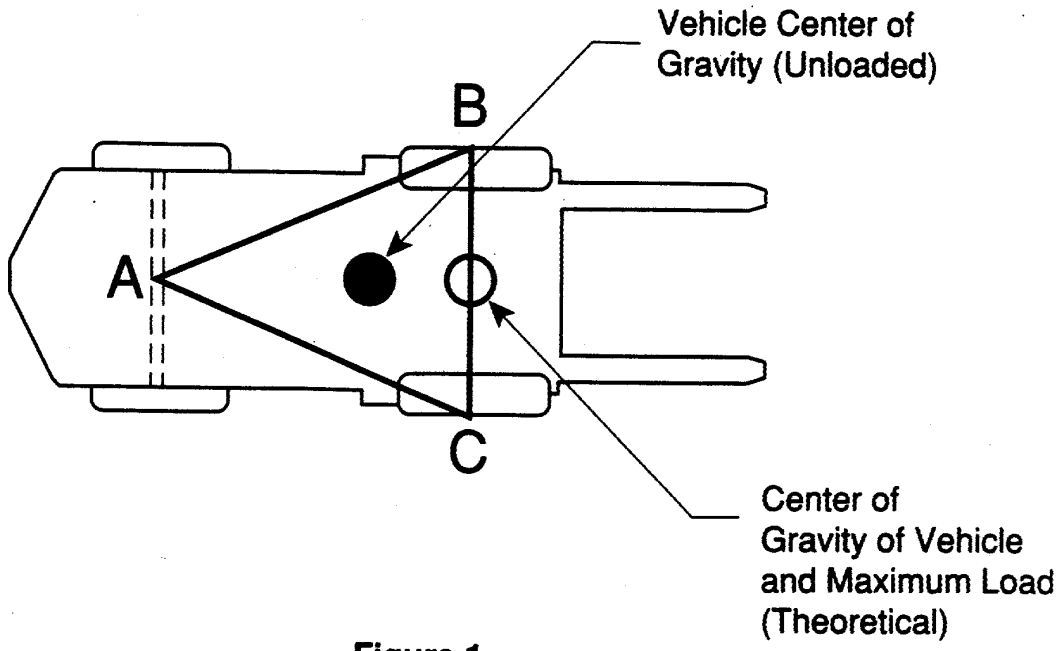

Figure 1.

NOTES:

1. When the vehicle is loaded, the combined center of gravity shifts toward line B-C. Theoretically the max load will result in the CG at the line B-C. In actual practice, the combined CG should never be at line B-C.

2. The addition of additional counterweight will cause the truck CG to shift toward point A and result in a truck that is less stable laterally.

BILLING CODE 4510–26–C

B–4.2. When the line of action of the vehicle or load-vehicle falls within the stability triangle, the vehicle is stable and will not tip over. However, when the line of action of the vehicle or the vehicle/load combination falls outside the stability triangle, the vehicle is unstable and may tip over. (See Figure 2.)

BILLING CODE 4510–26–P

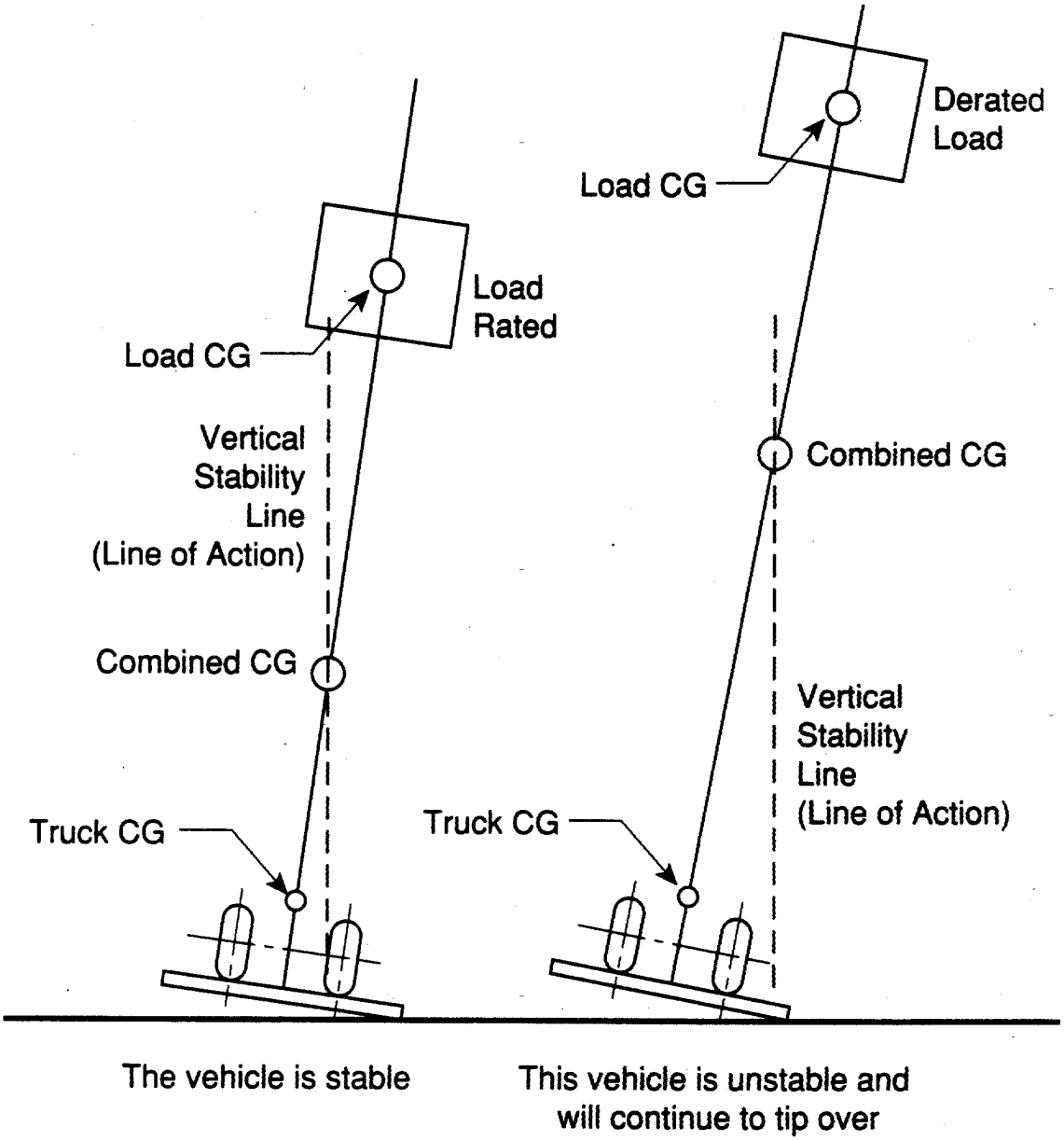

Figure 2.

BILLING CODE 4510–26–P

B–5. Longitudinal Stability

B–5.1. The axis of rotation when a truck tips forward is the point of contact of the front wheels of the vehicle with the pavement. When a powered industrial truck tips forward, it is this line that the truck will rotate about. When a truck is stable the vehicle-moment must exceed the load-moment. As long as the vehicle-moment is equal to or exceeds the load-moment, the vehicle will not tip over. On the other hand, if the load-moment slightly exceeds the vehicle-moment, the truck will begin the tip forward, thereby causing loss of steering control. If the load-moment greatly exceeds the vehicle-moment, the truck will tip forward.

B–5.2. In order to determine the maximum safe load moment, the truck manufacturer normally rates the truck at a maximum load at a given distance from the front face of the forks. The specified distance from the front face of the forks to the line of action of the load is commonly called a load center. Because larger trucks normally handle loads that are physically larger, these vehicles have greater load centers. A truck with a capacity of 30,000 pounds or less capacity is normally rated at a given load weight at a 24 inch load center. For trucks of greater than 30,000 pound capacity, the load center is normally rated at 36 or 48 inch load center distance. In order to safely operate the vehicle, the operator should always check the data plate and determine the maximum allowable weight at the rated load center.

B–5.3. Although the true load moment distance is measured from the front wheels, this distance is greater than the distance from the front face of the forks. Calculation of the maximum allowable load moment using the load center distance always provides a lower load moment than the truck was designed to handle. When handling unusual loads, such as those that are larger than 48 inches long (the center of gravity is greater than 24 inches), with an offset center of gravity, etc., then calculation of a maximum allowable load moment should be undertaken and this value used to determine whether a load can be handled. For example, if an operator is operating a 3000 pound capacity truck (with a 24 inch load center), the maximum allowable load moment is 72,000 inch-pounds (3,000 times 24). If a probable load is 60 inches long (30 inch load center), then the maximum weight that this load can weigh is 2,400 pounds (72,000 divided by 30).

B–6. Lateral Stability

B–6.1. The lateral stability of a vehicle is determined by the position of the line of action (a vertical line that passes through the combined center of gravity of the vehicle and the load) relative to the stability triangle. When the vehicle is not loaded, the location of the center of gravity of the truck is the only factor to be considered in determining the stability of the truck. As long as the line of action of the combined center of gravity of the vehicle and the load falls within the stability triangle, the truck is stable and will not tip over. However, if the line of action falls outside the stability triangle, the truck is not stable and may tip over.

B–6.2. Factors that affect the lateral stability of a vehicle include the placement of the load on the truck, the height of the load above the surface on which the vehicle is operating, and the degree of lean of the vehicle.

B–7. Dynamic Stability

B–7.1. Up to this point, we have covered stability of a powered industrial truck without consideration of the dynamic forces that result when the vehicle and load are put into motion. The transfer of weight and the resultant shift in the center of gravity due to the dynamic forces created when the machine is moving, braking, cornering, lifting, tilting, and lowering loads, etc., are important stability considerations.

B–7.2. When determining whether a load can be safely handled, the operator should exercise extra caution when handling loads that cause the vehicle to approach its maximum design characteristics. For example, if an operator must handle a maximum load, the load should be carried at the lowest position possible, the truck should be accelerated slowly and evenly, and the forks should be tilted forward cautiously. However, no precise rules can be formulated to cover all of these eventualities.

PART 1917—MARINE TERMINALS

5. The authority citation for part 1917 would be revised to read as follows:

Authority: Section 41, Longshore and Harbor Workers' Compensation Act (33 U.S.C. 941); secs. 4, 6, 8, Occupational Safety and Health Act of 1970 (29 U.S.C. 653, 655, 657); Secretary of Labor's Order No. 12–71 (36 FR 8754), 8–76 (41 FR 25059), 9–83 (48 FR 35736) or 1–90 (55 FR 9033), as applicable.

Section 1917.43 also issued under 29 CFR part 1911.

6. Section 1917.43 would be amended by adding a new paragraph (i) and by adding appendices A and B at the end of the section to read as follows:

§ 1917.43 Powered industrial trucks.

* * * * *

(i) *Operator training.*

(1) *Operator qualifications.* (i) The employer shall ensure that each potential operator of a powered industrial truck is capable of performing the duties that are required of the job.

(ii) In determining operator qualifications, the employer shall ensure that each potential operator has received the training required by this paragraph, that each potential operator has been evaluated by a designated person while performing the required duties, and that each potential operator performs those operations competently.

(2) *Training program implementation.*

(i) The employer shall implement a training program and ensure that only trained drivers who have successfully completed the training program are allowed to operate powered industrial trucks. Exception: Trainees under the direct supervision of a designated person shall be allowed to operate a powered industrial truck provided the operation of the vehicle is conducted in an area where other employees are not near and the operation of the truck is under controlled conditions.

(ii) Training shall consist of a combination of classroom instruction (Lecture, discussion, video tapes, and/or conference) and practical training (demonstrations and practical exercises by the trainee).

(iii) All training and evaluation shall be conducted by a designated person who has the requisite knowledge, training and experience to train powered industrial truck operators and judge their competency.

(3) *Training program content.* Powered industrial truck operator trainees shall be trained in the following topics unless the employer can demonstrate that some of the topics are not needed for safe operation.

(i) Truck related topics.

(A) All operating instructions, warnings and precautions for the types of trucks the operator will be authorized to operate;

(B) Similarities to and differences from the automobile;

(C) Controls and instrumentation: location, what they do and how they work;

(D) Power plant operation and maintenance;

(E) Steering and maneuvering;

(F) Visibility (including restrictions due to loading);

(G) Fork and attachment adaption, operation and limitations of their utilization;

(H) Vehicle capacity;

(I) Vehicle stability;

(J) Vehicle inspection and maintenance;

(K) Refueling or charging, recharging batteries;

(L) Operating limitations; and

(M) Any other operating instruction, warning or precaution listed in the operator's manual for the type vehicle which the employee is being trained to operate.

(ii) Workplace related topics.

(A) Surface conditions where the vehicle will be operated;

(B) Composition of probable loads and load stability;

(C) Load manipulation, stacking, unstacking;

(D) Pedestrian traffic;

(E) Narrow aisles and other restricted places of operation;

(F) Operating in hazardous classified locations;

(G) Operating the truck on ramps and other sloped surfaces that could affect the stability of the vehicle;

(H) Other unique or potentially hazardous environmental conditions that exist or may exist in the workplace; and

(I) Operating the vehicle in closed environments and other areas where insufficient ventilation could cause a buildup of carbon monoxide or diesel exhaust.

(iii) The requirements of this section.

(4) *Evaluation and refresher or remedial training.* (i) Sufficient evaluation and remedial training shall be conducted so that the employee retains and uses the knowledge, skills and ability needed to operate the powered industrial truck safely.

(ii) An evaluation of the performance of each powered industrial truck operator shall be conducted at least annually by a designated person.

(iii) Refresher or remedial training shall be provided when there is reason to believe that there has been unsafe operation, when an accident or a near-miss occurs or when an evaluation indicates that the operator is not capable of performing the assigned duties.

(5) *Certification.*

(i) The employer shall certify that each operator has received the training, has been evaluated as required by this paragraph, and has demonstrated competency in the performance of the operator's duties. The certification shall include the name of the trainee, the date of training, and the signature of the person performing the training and evaluation.

(ii) The employer shall retain the current training materials and course outline or the name and address of the person who conducted the training if it was conducted by an outside trainer.

(6) *Avoidance of duplicative training.*

(i) Each current truck operator who has received training in any of the elements specified in paragraph (i)(3) of this section for the types of trucks the employee is authorized to operate and the type workplace that the trucks are being operated in need not be retrained in those elements if the employer certifies in accordance with paragraph (i)(5)(i) of this section that the operator has been evaluated to be competent to perform those duties.

(ii) Each new truck operator who has received training in any of the elements specified in paragraph (i)(3) of this section for the types of trucks the employee will be authorized to operate and the type of workplace in which the trucks will be operated need not be retrained in those elements before initial assignment in the workplace if the employer has written documentation of the training and if the employee is evaluated pursuant to paragraph (i)(4) of this section to be competent.

Note to paragraph (i): Appendices A and B provide non-mandatory guidance to assist employers in implementing this paragraph (i).

Appendices to § 1917.43

Appendix A—Training of Powered Industrial Truck Operators

(Non-mandatory appendix to paragraph (i) of this section)

A–1. Operator Selection

A–1.1. Prospective operators of powered industrial trucks should be identified based upon their ability to be trained and accommodated to perform job functions that are essential to the operation of a powered industrial truck. Determination of the capabilities of a prospective operator to fulfill the demands of the job should be based upon the tasks that the job demands.

A–1.2. The employer should identify all the aspects of the job that the employee must meet/perform when doing his or her job. These aspects could include the level at which the employee must see and hear, the physical demands of the job, and the environmental extremes of the job.

A–1.3. One factor to be considered is the ability of the candidate to see and hear within reasonably acceptable limits. Included in the vision requirements are the ability to see at distance and peripherally. In certain instances, there also is a requirement for the candidate to discern different colors, primarily red, yellow and green.

A–1.4. The environmental extremes that might be demanded of a potential powered industrial truck operator include that ability of the person to work in areas of excessive cold or heat.

A–1.5. After an employee has been trained and appropriate accommodations have been made, the employer needs to determine whether the employee can safely perform the job.

A–2. The Method(s) of Training

A–2.1. Among the many methods of training are the lecture, conference, demonstration, test (written and/or oral) and the practical exercise. In most instances, a combination of these methods have been successfully used to train employees in the knowledge, skills and abilities that are essential to perform the job function that the employee is being trained to perform. To enhance the training and to make the training more understandable to the employee, employers and other trainers have used movies, slides, video tapes and other visual presentations. Making the presentation more understandable has several advantages including:

(1) The employees being trained remain more attentive during the presentation if graphical presentation are used, thereby increasing the effectiveness of the training;

(2) The use of visual presentations allows the trainer to ensure that the necessary information is covered during the training;

(3) The use of graphics makes better utilization of the training time by decreasing the need for the instructor to carry on long discussions about the instructional material; and

(4) The use of graphics during instruction provides greater retention by the trainees.

A–3. Training Program Content

A–3.1. Because each type (make and model) powered industrial truck has different operating characteristics, limitations and other unique features, an optimum employee training program for powered industrial truck operators must be based upon the type vehicles that the employee will be trained and authorized to operate. The training must also emphasize the features of the workplace which will affect the manner in which the vehicle must be operated. Finally, the training must include the general safety rules applicable to the operation of all powered industrial trucks.

A–3.2. Selection of the methods of training the operators has been left to the reasonable determination of the employer. Whereas some employees can assimilate instructional material while seated in a classroom, other employees may learn best by observing the conduct

of operations (demonstration) and/or by having to personally conduct the operations (practical exercise). In some instances, an employee can receive valuable instruction through the use of electronic mediums, such as the use of video tapes and movies. In most instances, a combination of the different training methods may provide the mechanism for providing the best training in the least amount of time. OSHA has specified at paragraph (i)(2)(ii) of this section that the training must consist of a combination classroom instruction and practical exercise. The use of both these modes of instruction is the only way of assuring that the trainee has received and comprehended the instruction and can utilize the information to safely operate a powered industrial truck.

A–4. Initial Training

A–4.1. The following is an outline of a generalized forklift operator training program:

(1) Characteristics of the powered industrial truck(s) the employee will be allowed to operate:

(a) Similarities to and differences from the automobile;

(b) Controls and instrumentation: location, what they do and how they work;

(c) Power plant operation and maintenance;

(d) Steering and maneuvering;

(e) Visibility;

(f) Fork and/or attachment adaption, operation and limitations of their utilization;

(g) Vehicle capacity;

(h) Vehicle stability;

(i) Vehicle inspection and maintenance;

(j) Refueling or charging, recharging batteries.

(k) Operating limitations.

(l) Any other operating instruction, warning or precaution listed in the operator's manual for the type vehicle which the employee is being trained to operate.

(2) The operating environment:

(a) Floor surfaces and/or ground conditions where the vehicle will be operated;

(b) Composition of probable loads and load stability;

(c) Load manipulation, stacking, unstacking;

(d) Pedestrian traffic;

(e) Narrow aisle and restricted place operation;

(f) Operating in classified hazardous locations;

(g) Operating the truck on ramps and other sloped surfaces which would affect the stability of the vehicle;

(h) Other unique or potentially hazardous environmental conditions which exist or may exist in the workplace.

(i) Operating the vehicle in closed environments and other areas where insufficient ventilation could cause a buildup of carbon monoxide or diesel exhaust.

(3) The requirements of this OSHA Standard.

A–5. Trainee Evaluation

A–5.1. The provisions of these proposed requirements specify that an employee evaluation be conducted both as part of the training and after completion of the training. The initial evaluation is useful for many reasons, including:

(1) the employer can determine what methods of instruction will produce a proficient truck operator with the minimum of time and effort;

(2) the employer can gain insight into the previous training that the trainee has received; and

(3) a determination can be made as to whether the trainee will be able to successfully operate a powered industrial truck. This initial evaluation can be completed by having the employee fill out a questionnaire, by an oral interview, or by a combination of these mechanisms. In many cases, answers received by the employee can be substantiated by contact with other employees or previous employers.

A–6. Refresher or Remedial Training

A–6.1. (The type information listed in paragraph A–6.2 of this appendix would be used when the training is more than an on-the-spot correction being made by a supervisor or when there have been multiple instances of on-the-spot corrections having to be made.) When an on-the-spot correction is used, the person making the correction should point out the incorrect manner of operation of the truck or other unsafe act being conducted, tell the employee how to do the operation correctly, and then ensure that the employee does the operation correctly.

A–6.2. The following items may be used when a more general, structured retraining program is utilized to train employees and eliminate unsafe operation of the vehicle:

(1) Common unsafe situations encountered in the workplace;

(2) Unsafe methods of operating observed or known to be used;

(3) The need for constant attentiveness to the vehicle, the workplace conditions and the manner in which the vehicle is operated.

A–6.3. Details about the above subject areas need to be expanded upon so that the operator receives all the information which is necessary for the safe operation of the vehicle. Insight into some of the specifics of the above subject areas may be obtained from the vehicle manufacturers' literature, the national consensus standards [e.g. the ANSI B56 series of standards (current revisions)] and this OSHA Standard.

Appendix B—Stability of Powered Industrial Trucks

(Non-mandatory appendix to paragraph (i) of this section)

B–1. Definitions

To understand the principle of stability, understanding definitions of the following is necessary:

Center of Gravity is that point of an object at which all of the weight of an object can be considered to be concentrated.

Counterweight is the weight that is a part of the basic structure of a truck that is used to offset the weight of a load and to maximize the resistance of the vehicle to tipping over.

Fulcrum is the axis of rotation of the truck when it tips over.

Grade is the slope of any surface that is usually measured as the number of feet of rise of fall over a hundred foot horizontal distance (this measurement is designated as a percent).

Lateral stability is the resistance of a truck to tipping over sideways.

Line of action is a imaginary vertical line through the center of gravity of an object.

Load center is the horizontal distance from the edge of the load (or the vertical face of the forks or other attachment) to the line of action through the center of gravity of the load.

Longitudinal stability is the resistance of a truck to overturning forward or rearward.

Moment is the product of the weight of the object times the distance from a fixed point. In the case of a powered industrial truck, the distance is measured from the point that the truck will tip over to the line of action of the object. The distance is always measured perpendicular to the line of action.

Track is the distance between wheels on the same axle of a vehicle.

Wheelbase is the distance between the centerline of the front and rear wheels of a vehicle.

B–2. General

B–2.1. Stability determination for a powered industrial truck is not complicated once a few basic principles are understood. There are many factors

that influence vehicle stability. Vehicle wheelbase, track, height and weight distribution of the load, and the location of the counterweights of the vehicle (if the vehicle is so equipped), all contribute to the stability of the vehicle.

B–2.2. The ''stability triangle'', used in most discussions of stability, is not mysterious but is used to demonstrate truck stability in rather simple fashion.

B–3. Basic Principles

B–3.1. The determination of whether an object is stable is dependent on the moment of an object at one end of a system being greater than, equal to or smaller than the moment of an object at the other end of that system. This is the same principle on which a see saw or teeter-totter works, that is, if the product of the load and distance from the fulcrum (moment) is equal to the moment at the other end of the device, the device is balanced and it will not move. However, if there is a greater moment at one end of the device, the device will try to move downward at the end with the greater moment.

B–3.2. Longitudinal stability of a counterbalanced powered industrial truck is dependent on the moment of the vehicle and the moment of the load. In other words, if the mathematic product of the load moment (the distance is from the front wheels, the point about which the vehicle would tip forward) the system is balanced and will not tip forward. However, if the load-moment is greater than the vehicle-moment, the greater load-moment will force the truck to tip forward.

B–4. The Stability Triangle

B–4.1. Almost all counterbalanced powered industrial trucks have a three point suspension system, that is, the vehicle is supported at three points. This is true even if it has four wheels. The steer axle of most trucks is attached to the truck by means of a pivot pin in the center of the axle. This three point support forms a triangle called the stability triangle when the points are connected with imaginary lines. Figure 1 depicts the stability triangle.

BILLING CODE 4510–26–P

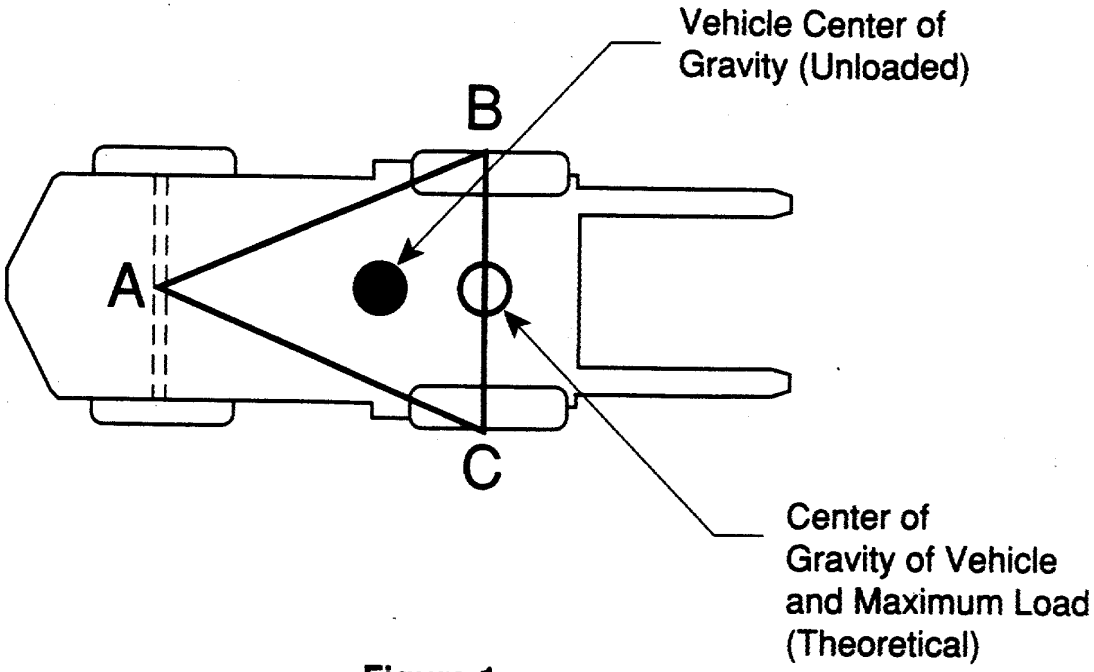

Figure 1.

NOTES:

1. When the vehicle is loaded, the combined center of gravity shifts toward line B-C. Theoretically the max load will result in the CG at the line B-C. In actual practice, the combined CG should never be at line B-C.

2. The addition of additional counterweight will cause the truck CG to shift toward point A and result in a truck that is less stable laterally.

BILLING CODE 4510–26–C

B–4.2. When the line of action of the vehicle or load-vehicle falls within the stability triangle, the vehicle is stable and will not tip over. However, when the line of action of the vehicle or the vehicle/load combination falls outside the stability triangle, the vehicle is unstable and may tip over. (See Figure 2.)

BILLING CODE 4510–26–P

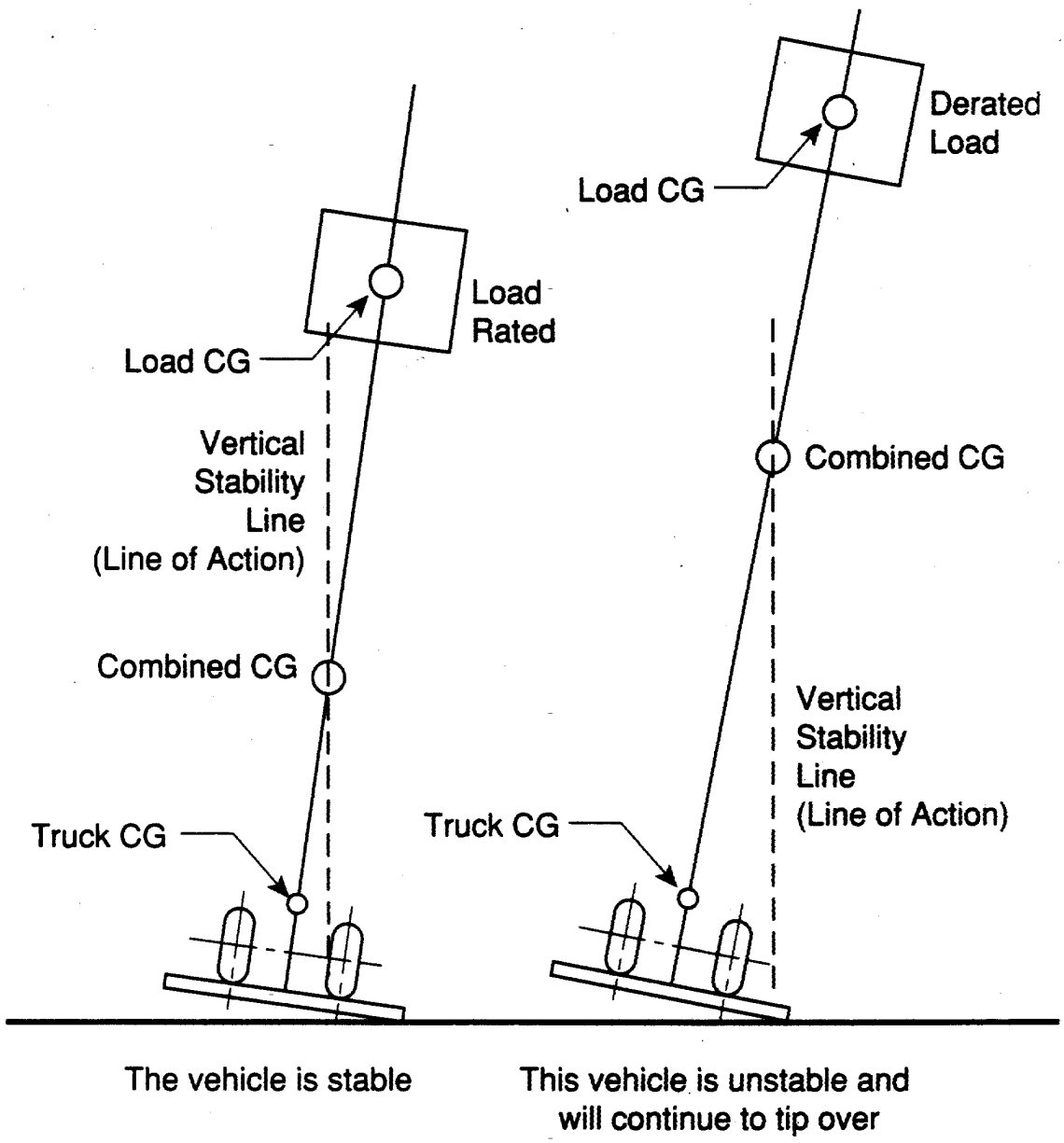

Figure 2.

BILLING CODE 4510–26–C

B–5. Longitudinal Stability

B–5.1. The axis of rotation when a truck tips forward is the point of contact of the front wheels of the vehicle with the pavement. When a powered industrial truck tips forward, it is this line that the truck will rotate about. When a truck is stable the vehicle-moment must exceed the load-moment. As long as the vehicle-moment is equal to or exceeds the load-moment, the vehicle will not tip over. On the other hand, if the load-moment slightly exceeds the vehicle-moment, the truck will begin the tip forward, thereby causing loss of steering control. If the load-moment greatly exceeds the vehicle-moment, the truck will tip forward.

B–5.2. In order to determine the maximum safe load moment, the truck manufacturer normally rates the truck at a maximum load at a given distance from the front face of the forks. The specified distance from the front face of the forks to the line of action of the load is commonly called a load center. Because larger trucks normally handle loads that are physically larger, these vehicles have greater load centers. A truck with a capacity of 30,000 pounds or less capacity is normally rated at a given load weight at a 24 inch load center. For trucks of greater than 30,000 pound capacity, the load center is normally rated at 36 or 48 inch load center distance. In order to safely operate the vehicle, the operator should always check the data plate and determine the maximum allowable weight at the rated load center.

B–5.3. Although the true load moment distance is measured from the front wheels, this distance is greater than the distance from the front face of the forks. Calculation of the maximum allowable load moment using the load center distance always provides a lower load moment than the truck was designed to handle. When handling unusual loads, such as those that are larger than 48 inches long (the center of gravity is greater than 24 inches), with an offset center of gravity, etc., then calculation of a maximum allowable load moment should be undertaken and this value used to determine whether a load can be handled. For example, if an operator is operating a 3,000 pound capacity truck (with a 24 inch load center), the maximum allowable load moment is 72,000 inch-pounds (3,000 times 24). If a probable load is 60 inches long (30 inch load center), then the maximum weight that this load can weigh is 2,400 pounds (72,000 divided by 30).

B–6. Lateral Stability

B–6.1. The lateral stability of a vehicle is determined by the position of the line of action (a vertical line that passes through the combined center of gravity of the vehicle and the load) relative to the stability triangle. When the vehicle is not loaded, the location of the center of gravity of the truck is the only factor to be considered in determining the stability of the truck. As long as the line of action of the combined center of gravity of the vehicle and the load falls within the stability triangle, the truck is stable and will not tip over. However, if the line of action falls outside the stability triangle, the truck is not stable and may tip over.

B–6.2. Factors that affect the lateral stability of a vehicle include the placement of the load on the truck, the height of the load above the surface on which the vehicle is operating, and the degree of lean of the vehicle.

B–7. Dynamic Stability

B–7.1. Up to this point, we have covered stability of a powered industrial truck without consideration of the dynamic forces that result when the vehicle and load are put into motion. The transfer of weight and the resultant shift in the center of gravity due to the dynamic forces created when the machine is moving, braking, cornering, lifting, tilting, and lowering loads, etc., are important stability considerations.

B–7.2. When determining whether a load can be safely handled, the operator should exercise extra caution when handling loads that cause the vehicle to approach its maximum design characteristics. For example, if an operator must handle a maximum load, the load should be carried at the lowest position possible, the truck should be accelerated slowly and evenly, and the forks should be tilted forward cautiously. However, no precise rules can be formulated to cover all of these eventualities.

PART 1918—SAFETY AND HEALTH REGULATIONS FOR LONGSHORING

7. The authority citation for part 1918 would be revised to read as follows:

Authority: Section 41, Longshore and Harbor Workers' Compensation Act (33 U.S.C. 941); secs. 4, 6, 8, Occupational Safety and Health Act of 1970 (29 U.S.C. 653, 655, 657); Secretary of Labor's Order No. 12–71 (36 FR 8754), 8–76 (41 FR 25059), 9–83 (48 FR 35736) or 1–90 (55 FR 9033), as applicable. Section 1918.77 also issued under 29 CFR part 1911.

8. A new § 1918.77 with appendices A and B would be added to subpart G to read as follows:

§ 1918.77 Powered Industrial Trucks.

(a) *Operator training.*

(1) *Operator qualifications.* (i) The employer shall ensure that each potential operator of a powered industrial truck is capable of performing the duties that are required of the job.

(ii) In determining operator qualifications, the employer shall ensure that each potential operator has received the training required by this paragraph, that each potential operator has been evaluated by a designated person while performing the required duties, and that each potential operator performs those operations competently.

(2) *Training program implementation.*

(i) The employer shall implement a training program and ensure that only trained drivers who have successfully completed the training program are allowed to operate powered industrial trucks. Exception: Trainees under the direct supervision of a designated person shall be allowed to operate a powered industrial truck provided the operation of the vehicle is conducted in an area where other employees are not near and the operation of the truck is under controlled conditions.

(ii) Training shall consist of a combination of classroom instruction (Lecture, discussion, video tapes, and/or conference) and practical training (demonstrations and practical exercises by the trainee).

(iii) All training and evaluation shall be conducted by a designated person who has the requisite knowledge, training and experience to train powered industrial truck operators and judge their competency.

(3) *Training program content.* Powered industrial truck operator trainees shall be trained in the following topics unless the employer can demonstrate that some of the topics are not needed for safe operation.

(i) Truck related topics.

(A) All operating instructions, warnings and precautions for the types of trucks the operator will be authorized to operate;

(B) Similarities to and differences from the automobile;

(C) Controls and instrumentation: location, what they do and how they work;

(D) Power plant operation and maintenance;

(E) Steering and maneuvering;

(F) Visibility (including restrictions due to loading);

(G) Fork and attachment adaption, operation and limitations of their utilization;

(H) Vehicle capacity;

(I) Vehicle stability;

(J) Vehicle inspection and maintenance;

(K) Refueling or charging, recharging batteries;

(L) Operating limitations; and

(M) Any other operating instruction, warning or precaution listed in the operator's manual for the type vehicle which the employee is being trained to operate.

(ii) Workplace related topics.

(A) Surface conditions where the vehicle will be operated;

(B) Composition of probable loads and load stability;

(C) Load manipulation, stacking, unstacking;

(D) Pedestrian traffic;

(E) Narrow aisles and other restricted places of operation;

(F) Operating in hazardous classified locations;

(G) Operating the truck on ramps and other sloped surfaces that could affect the stability of the vehicle;

(H) Other unique or potentially hazardous environmental conditions that exist or may exist in the workplace; and

(I) Operating the vehicle in closed environments and other areas where insufficient ventilation could cause a buildup of carbon monoxide or diesel exhaust.

(iii) The requirements of this section.

(4) *Evaluation and refresher or remedial training.*

(i) Sufficient evaluation and remedial training shall be conducted so that the employee retains and uses the knowledge, skills and ability needed to operate the powered industrial truck safely.

(ii) An evaluation of the performance of each powered industrial truck operator shall be conducted at least annually by a designated person.

(iii) Refresher or remedial training shall be provided when there is reason to believe that there has been unsafe operation, when an accident or a near-miss occurs or when an evaluation indicates that the operator is not capable of performing the assigned duties.

(5) *Certification.*

(i) The employer shall certify that each operator has received the training, has been evaluated as required by this paragraph, and has demonstrated competency in the performance of the operator's duties. The certification shall include the name of the trainee, the date of training, and the signature of the person performing the training and evaluation.

(ii) The employer shall retain the current training materials and course outline or the name and address of the person who conducted the training if it was conducted by an outside trainer.

(6) *Avoidance of Duplicative Training.*

(i) Each current truck operator who has received training in any of the elements specified in paragraph (a)(3) of this section for the types of trucks the employee is authorized to operate and the type workplace that the trucks are being operated in need not be retrained in those elements if the employer certifies in accordance with paragraph (a)(5)(i) of this section that the operator has been evaluated to be competent to perform those duties.

(ii) Each new truck operator who has received training in any of the elements specified in paragraph (a)(3) of this section for the types of trucks the employee will be authorized to operate and the type of workplace in which the trucks will be operated need not be retrained in those elements before initial assignment in the workplace if the employer has written documentation of the training and if the employee is evaluated pursuant to paragraph (a)(4) of this section to be competent.

(b) [Reserved]

Appendixes to § 1918.77

Appendix A—Training of Powered Industrial Truck Operators

(Non-mandatory appendix to paragraph (a) of this section)

A–1. Operator Selection

A–1.1. Prospective operators of powered industrial trucks should be identified based upon their ability to be trained and accommodated to perform job functions that are essential to the operation of a powered industrial truck. Determination of the capabilities of a prospective operator to fulfill the demands of the job should be based upon the tasks that the job demands.

A–1.2. The employer should identify all the aspects of the job that the employee must meet/perform when doing his or her job. These aspects could include the level at which the employee must see and hear, the physical demands of the job, and the environmental extremes of the job.

A–1.3. One factor to be considered is the ability of the candidate to see and hear within reasonably acceptable limits. Included in the vision requirements are the ability to see at distance and peripherally. In certain instances, there also is a requirement for the candidate to discern different colors, primarily red, yellow and green.

A–1.4. The environmental extremes that might be demanded of a potential powered industrial truck operator include that ability of the person to work in areas of excessive cold or heat.

A–1.5. After an employee has been trained and appropriate accommodations have been made, the employer needs to determine whether the employee can safely perform the job.

A–2. The Method(s) of Training

A–2.1. Among the many methods of training are the lecture, conference, demonstration, test (written and/or oral) and the practical exercise. In most instances, a combination of these methods have been successfully used to train employees in the knowledge, skills and abilities that are essential to perform the job function that the employee is being trained to perform. To enhance the training and to make the training more understandable to the employee, employers and other trainers have used movies, slides, video tapes and other visual presentations. Making the presentation more understandable has several advantages including:

(1) The employees being trained remain more attentive during the presentation if graphical presentation are used, thereby increasing the effectiveness of the training;

(2) The use of visual presentations allows the trainer to ensure that the necessary information is covered during the training;

(3) The use of graphics makes better utilization of the training time by decreasing the need for the instructor to carry on long discussions about the instructional material; and

(4) The use of graphics during instruction provides greater retention by the trainees.

A–3. Training Program Content

A–3.1. Because each type (make and model) powered industrial truck has different operating characteristics, limitations and other unique features, an optimum employee training program for powered industrial truck operators must be based upon the type vehicles that the employee will be trained and authorized to operate. The training must also emphasize the features of the workplace which will affect the manner in which the vehicle must be operated. Finally, the training must include the general safety rules applicable to the operation of all powered industrial trucks.

A–3.2. Selection of the methods of training the operators has been left to the reasonable determination of the employer. Whereas some employees can assimilate instructional material while seated in a classroom, other employees may learn best by observing the conduct of operations (demonstration) and/or by having to personally conduct the operations (practical exercise). In some instances, an employee can receive valuable instruction through the use of

electronic mediums, such as the use of video tapes and movies. In most instances, a combination of the different training methods may provide the mechanism for providing the best training in the least amount of time. OSHA has specified at paragraph (a)(2)(ii) of this section that the training must consist of a combination classroom instruction and practical exercise. The use of both these modes of instruction is the only way of assuring that the trainee has received and comprehended the instruction and can utilize the information to safely operate a powered industrial truck.

A–4. Initial Training

A–4.1. The following is an outline of a generalized forklift operator training program:

(1) Characteristics of the powered industrial truck(s) the employee will be allowed to operate:

(a) Similarities to and differences from the automobile;

(b) Controls and instrumentation: location, what they do and how they work;

(c) Power plant operation and maintenance;

(d) Steering and maneuvering;

(e) Visibility;

(f) Fork and/or attachment adaption, operation and limitations of their utilization;

(g) Vehicle capacity;

(h) Vehicle stability;

(i) Vehicle inspection and maintenance;

(j) Refueling or charging, recharging batteries.

(k) Operating limitations.

(l) Any other operating instruction, warning or precaution listed in the operator's manual for the type vehicle which the employee is being trained to operate.

(2) The operating environment:

(a) Floor surfaces and/or ground conditions where the vehicle will be operated;

(b) Composition of probable loads and load stability;

(c) Load manipulation, stacking, unstacking;

(d) Pedestrian traffic;

(e) Narrow aisle and restricted place operation;

(f) Operating in classified hazardous locations;

(g) Operating the truck on ramps and other sloped surfaces which would affect the stability of the vehicle;

(h) Other unique or potentially hazardous environmental conditions which exist or may exist in the workplace.

(i) Operating the vehicle in closed environments and other areas where insufficient ventilation could cause a buildup of carbon monoxide or diesel exhaust.

(3) The requirements of this OSHA Standard.

A–5. Trainee Evaluation

A–5.1. The provisions of these proposed requirements specify that an employee evaluation be conducted both as part of the training and after completion of the training. The initial evaluation is useful for many reasons, including:

(1) the employer can determine what methods of instruction will produce a proficient truck operator with the minimum of time and effort;

(2) the employer can gain insight into the previous training that the trainee has received; and

(3) a determination can be made as to whether the trainee will be able to successfully operate a powered industrial truck. This initial evaluation can be completed by having the employee fill out a questionnaire, by an oral interview, or by a combination of these mechanisms. In many cases, answers received by the employee can be substantiated by contact with other employees or previous employers.

A–6. Refresher or Remedial Training

A–6.1. (The type information listed at paragraph A–6.2 of this appendix would be used when the training is more than an on-the-spot correction being made by a supervisor or when there have been multiple instances of on-the-spot corrections having to be made.) When an on-the-spot correction is used, the person making the correction should point out the incorrect manner of operation of the truck or other unsafe act being conducted, tell the employee how to do the operation correctly, and then ensure that the employee does the operation correctly.

A–6.2. The following items may be used when a more general, structured retraining program is utilized to train employees and eliminate unsafe operation of the vehicle:

(1) Common unsafe situations encountered in the workplace;

(2) Unsafe methods of operating observed or known to be used;

(3) The need for constant attentiveness to the vehicle, the workplace conditions and the manner in which the vehicle is operated.

A–6.3. Details about the above subject areas need to be expanded upon so that the operator receives all the information which is necessary for the safe operation of the vehicle. Insight into some of the specifics of the above subject areas may be obtained from the vehicle manufacturers' literature, the national consensus standards [e.g. the ANSI B56 series of standards (current revisions)] and this OSHA Standard.

Appendix B—Stability of Powered Industrial Trucks

(Non-mandatory appendix to paragraph (a) of this section)

B–1. Definitions

To understand the principle of stability, understanding definitions of the following is necessary:

Center of Gravity is that point of an object at which all of the weight of an object can be considered to be concentrated.

Counterweight is the weight that is a part of the basic structure of a truck that is used to offset the weight of a load and to maximize the resistance of the vehicle to tipping over.

Fulcrum is the axis of rotation of the truck when it tips over.

Grade is the slope of any surface that is usually measured as the number of feet of rise of fall over a hundred foot horizontal distance (this measurement is designated as a percent).

Lateral stability is the resistance of a truck to tipping over sideways.

Line of action is a imaginary vertical line through the center of gravity of an object.

Load center is the horizontal distance from the edge of the load (or the vertical face of the forks or other attachment) to the line of action through the center of gravity of the load.

Longitudinal stability is the resistance of a truck to overturning forward or rearward.

Moment is the product of the weight of the object times the distance from a fixed point. In the case of a powered industrial truck, the distance is measured from the point that the truck will tip over to the line of action of the object. The distance is always measured perpendicular to the line of action.

Track is the distance between wheels on the same axle of a vehicle.

Wheelbase is the distance between the centerline of the front and rear wheels of a vehicle.

B–2. General

B–2.1. Stability determination for a powered industrial truck is not complicated once a few basic principles are understood. There are many factors that influence vehicle stability. Vehicle wheelbase, track, height and weight distribution of the load, and the location of the counterweights of the vehicle (if the vehicle is so equipped), all contribute to the stability of the vehicle.

B–2.2. The ''stability triangle'', used in most discussions of stability, is not

mysterious but is used to demonstrate truck stability in rather simple fashion.

B–3. Basic Principles

B–3.1. The determination of whether an object is stable is dependent on the moment of an object at one end of a system being greater than, equal to or smaller than the moment of an object at the other end of that system. This is the same principle on which a seesaw or teeter-totter works, that is, if the product of the load and distance from the fulcrum (moment) is equal to the moment at the other end of the device, the device is balanced and it will not move. However, if there is a greater moment at one end of the device, the device will try to move downward at the end with the greater moment.

B–3.2. Longitudinal stability of a counterbalanced powered industrial truck is dependent on the moment of the vehicle and the moment of the load. In other words, if the mathematic product of the load moment (the distance is from the front wheels, the point about which the vehicle would tip forward) the system is balanced and will not tip forward. However, if the load-moment is greater than the vehicle-moment, the greater load-moment will force the truck to tip forward.

B–4. The Stability Triangle

B–4.1. Almost all counterbalanced powered industrial trucks have a three-point suspension system, that is, the vehicle is supported at three points. This is true even if it has four wheels. The steer axle of most trucks is attached to the truck by means of a pivot pin in the center of the axle. This three-point support forms a triangle called the stability triangle when the points are connected with imaginary lines. Figure 1 depicts the stability triangle.

BILLING CODE 4510–26–P

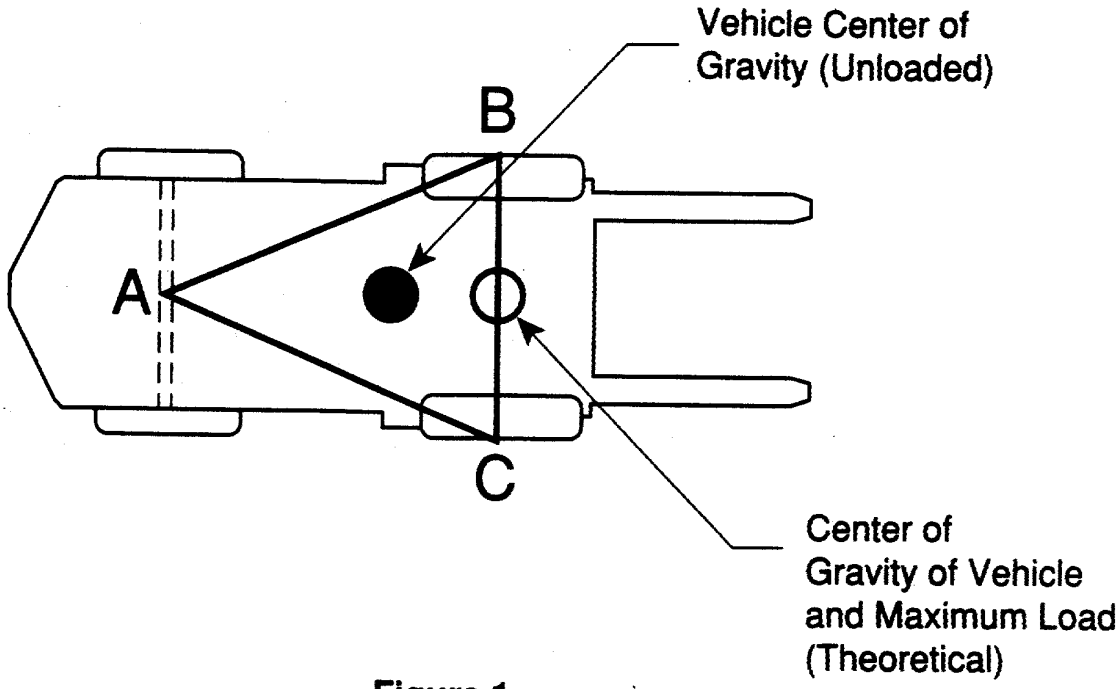

Figure 1.

NOTES:

1. When the vehicle is loaded, the combined center of gravity shifts toward line B-C. Theoretically the max load will result in the CG at the line B-C. In actual practice, the combined CG should never be at line B-C.

2. The addition of additional counterweight will cause the truck CG to shift toward point A and result in a truck that is less stable laterally.

BILLING CODE 4510–26–C

B–4.2. When the line of action of the vehicle or load-vehicle falls within the stability triangle, the vehicle is stable and will not tip over. However, when the line of action of the vehicle or the vehicle/load combination falls outside the stability triangle, the vehicle is unstable and may tip over. (See Figure 2.)

BILLING CODE 4510–26–P

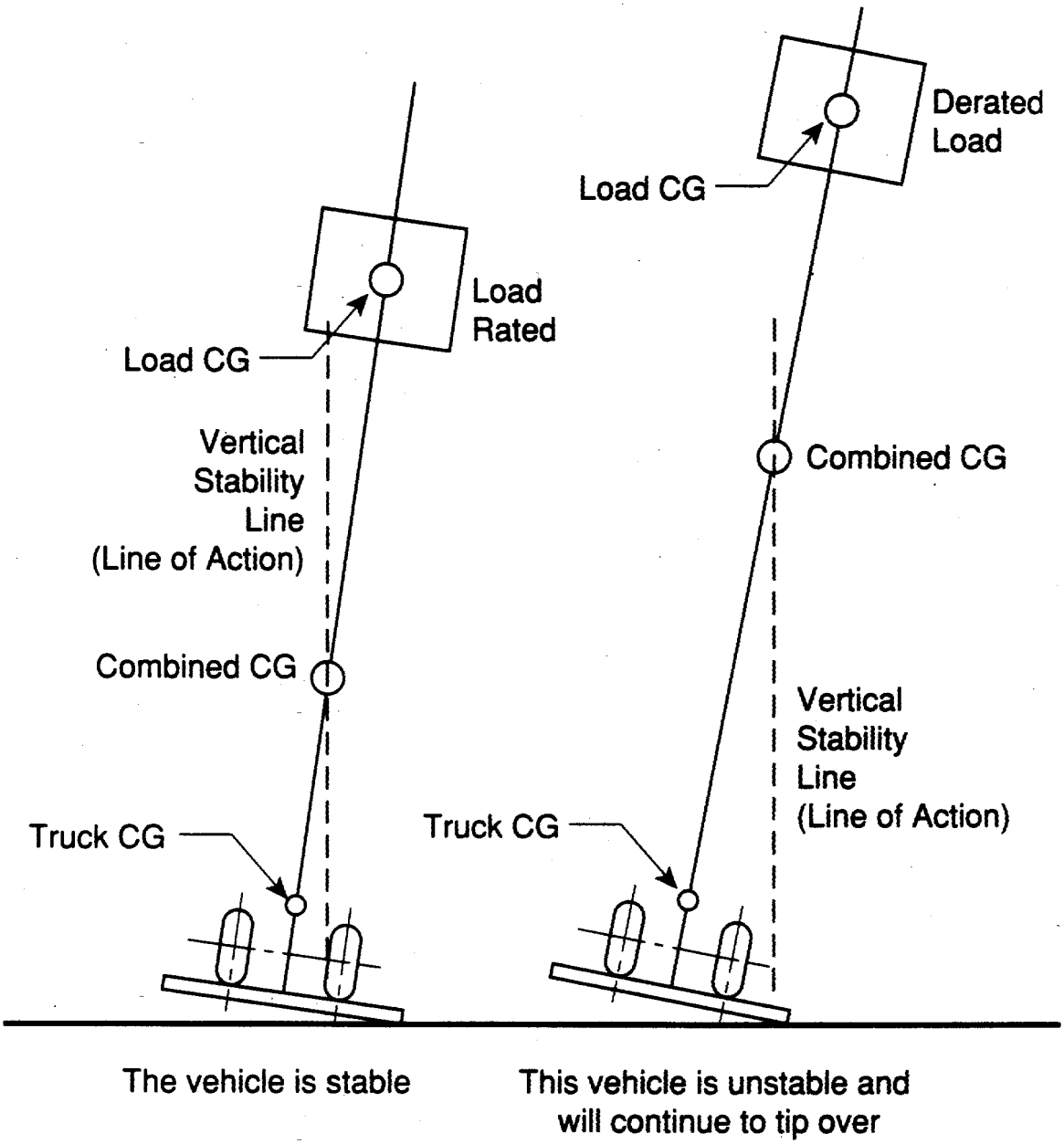

Figure 2.

BILLING CODE 4510–26–C

B–5. Longitudinal Stability

B–5.1. The axis of rotation when a truck tips forward is the point of contact of the front wheels of the vehicle with the pavement. When a powered industrial truck tips forward, it is this line that the truck will rotate about. When a truck is stable the vehicle-moment must exceed the load-moment. As long as the vehicle-moment is equal to or exceeds the load-moment, the vehicle will not tip over. On the other hand, if the load-moment slightly exceeds the vehicle-moment, the truck will begin the tip forward, thereby causing loss of steering control. If the load-moment greatly exceeds the vehicle-moment, the truck will tip forward.

B–5.2. In order to determine the maximum safe load moment, the truck manufacturer normally rates the truck at a maximum load at a given distance from the front face of the forks. The specified distance from the front face of the forks to the line of action of the load is commonly called a load center. Because larger trucks normally handle loads that are physically larger, these vehicles have greater load centers. A truck with a capacity of 30,000 pounds or less capacity is normally rated at a given load weight at a 24 inch load center. For trucks of greater than 30,000 pound capacity, the load center is normally rated at 36 or 48 inch load center distance. In order to safely operate the vehicle, the operator should always check the data plate and determine the maximum allowable weight at the rated load center.

B–5.3. Although the true load moment distance is measured from the front wheels, this distance is greater than the distance from the front face of the forks. Calculation of the maximum allowable load moment using the load center distance always provides a lower load moment than the truck was designed to handle. When handling unusual loads, such as those that are larger than 48 inches long (the center of gravity is greater than 24 inches), with an offset center of gravity, etc., then calculation of a maximum allowable load moment should be undertaken and this value used to determine whether a load can be handled. For example, if an operator is operating a 3000 pound capacity truck (with a 24 inch load center), the maximum allowable load moment is 72,000 inch-pounds (3,000 times 24). If a probable load is 60 inches long (30 inch load center), then the maximum weight that this load can weigh is 2,400 pounds (72,000 divided by 30).

B–6. Lateral Stability

B–6.1. The lateral stability of a vehicle is determined by the position of the line of action (a vertical line that passes through the combined center of gravity of the vehicle and the load) relative to the stability triangle. When the vehicle is not loaded, the location of the center of gravity of the truck is the only factor to be considered in determining the stability of the truck. As long as the line of action of the combined center of gravity of the vehicle and the load falls within the stability triangle, the truck is stable and will not tip over. However, if the line of action falls outside the stability triangle, the truck is not stable and may tip over.

B–6.2. Factors that affect the lateral stability of a vehicle include the placement of the load on the truck, the height of the load above the surface on which the vehicle is operating, and the degree of lean of the vehicle.

B–7. Dynamic Stability

B–7.1. Up to this point, we have covered stability of a powered industrial truck without consideration of the dynamic forces that result when the vehicle and load are put into motion. The transfer of wight and the resultant shift in the center of gravity due to the dynamic forces created when the machine is moving, braking, cornering, lifting, tilting, and lowering loads, etc., are important stability considerations.

B–7.2. When determining whether a load can be safely handled, the operator should exercise extra caution when handling loads that cause the vehicle to approach its maximum design characteristics. For example, if an operator must handle a maximum load, the load should be carried at the lowest position possible, the truck should be accelerated slowly and evenly, and the forks should be tilted forward cautiously. However, no precise rules can be formulated to cover all of these eventualities.

[FR Doc. 95–5826 Filed 3–13–95; 8:45 am]

BILLING CODE 4510–26–P

federal register

Tuesday
March 14, 1995

Part III

Department of Housing and Urban Development

Office of the Assistant Secretary for Housing—Federal Housing Commissioner

24 CFR Parts 25, 201, and 202

Approval of Lending Institutions and Mortgagees; Investing Lenders in the Title I Property Improvement and Manufactured Home Insurance Programs; Final Rule

DEPARTMENT OF HOUSING AND URBAN DEVELOPMENT

Office of the Assistant Secretary for Housing—Federal Housing Commissioner

24 CFR Parts 25, 201, and 202

[Docket No. R–95–1769; FR–3847–F–01]

RIN 2502–AG43

Approval of Lending Institutions and Mortgagees; Investing Lenders in the Title I Property Improvement and Manufactured Home Insurance Programs

AGENCY: Office of the Assistant Secretary for Housing—Federal Housing Commissioner, HUD.

ACTION: Final rule.

SUMMARY: This final rule amends the regulations that govern the approval of lending institutions to participate in the property improvement and manufactured home loan insurance programs under Title I, section 2 of the National Housing Act. The rule creates a new category of approved lending institutions, to be known as ''investing lenders,'' and provides minimum requirements and criteria for their approval and operation. In addition, this rule makes conforming changes to several HUD regulations.

EFFECTIVE DATE: April 13, 1995.

FOR FURTHER INFORMATION CONTACT: Karen Garner-Wing, Director, Lender Approval and Recertification Division, Room 9146, U.S. Department of Housing and Urban Development, 451 Seventh Street SW., Washington, D.C. 20410. Telephone 202–708–3976, ext. 2024. Hearing- or speech-impaired individuals may call the Office of Housing's TDD number, 202–708–4594. (These are not toll-free numbers.)

SUPPLEMENTARY INFORMATION:

Introduction

Under Title I, section 2 of the National Housing Act (12 U.S.C. 1703), the Department insures approved lending institutions against losses sustained as a result of borrower defaults on property improvement loans and manufactured home loans. The regulations governing the approval of lending institutions to participate in the Title I property improvement and manufactured home loan insurance programs are found in 24 CFR part 202.

This final rule amends part 202 to create a new category of approved lending institutions, to be known as ''investing lenders.'' This change will provide opportunities for a wider range of financial institutions, including charitable and nonprofit associations and pension funds, to invest in Title I loans, without the obligation of maintaining the staff and facilities needed for loan origination and servicing.

By making greater levels of capital available, both the property improvement and manufactured home loan programs will benefit. Increased capital investment in Title I loans will help expand the availability of the property improvement loan program to all areas of the nation, and will increase its use in carrying out community revitalization and the rehabilitation of housing for low- and moderate-income families. In addition, making more funds available for Title I loans will help make the manufactured home loan program a more competitive financing vehicle to enable first-time buyers to achieve homeownership.

The rule adds a new § 202.2(f), which defines an ''investing lender'' as a financial institution, including a charitable or nonprofit organization or pension fund, which is approved by the Secretary to purchase, hold, and sell loans that have been originated and insured under the Title I program. An investing lender may not originate Title I loans in its own name, and it may not service such loans except with the prior approval of the Secretary.

In addition to the general approval requirements applicable to all Title I lenders, the rule adds a new § 202.7 that establishes the following additional requirements for approval as an investing lender:

1. An investing lender must have lawful authority to purchase, hold, and sell Title I property improvement and manufactured home loans in its own name. Since a Title I loan correspondent is not authorized to report loans for insurance, an investing lender may purchase loans only from a lender holding a valid Title I contract of insurance, and not from a loan correspondent.

2. An investing lender must have, or have made arrangements for, funds sufficient to support a projected investment of at least $1,000,000 in property improvement and manufactured home loans. For example, the investing lender may have a warehouse line of credit or other funding program that would meet this requirement.

3. In lieu of the staffing and facilities requirements in § 202.3(b), an investing lender must have officers or employees who are capable of managing its activities in purchasing, holding, and selling Title I loans.

4. An investing lender must be responsible for the servicing of the Title I loans that it holds, through contractual or other arrangements with another lender holding a valid Title I contract of insurance, but it may not directly service such loans except with the prior approval of the Secretary.

Conforming and Clarifying Amendments

The Department is also amending other sections of parts 25, 201, and 202 to conform them to the changes outlined above and to clarify the text of the regulations. The rule includes the following amendments:

1. The last sentence of § 25.2 is amended to clearly list those violations of the Title I lender approval requirements in part 202 that are subject to redelegation by the Mortgagee Review Board.

2. In § 25.3, the definition of ''lender'' is amended to more closely conform to the definition of this term in parts 201 and 202. In addition, a definition of ''loan correspondent'' is added, and the definition of ''mortgagee'' is revised to include Title I lenders and loan correspondents, as provided for in section 202(c)(7) of the National Housing Act (12 U.S.C. 1708(c)(7)).

3. Section 25.9(cc) is amended to correct an obsolete reference to the section in part 202 that lists the grounds for an administrative action against a Title I lender or loan correspondent.

4. In §§ 201.2(o) and 202.2(a), the definition of ''lender'' is amended to specify that a Title I lender may be approved for the purpose of holding Title I loans.

5. Section 202.3(c) is amended to clarify that a corporate officer or other person authorized to bind the lender shall be responsible for reporting all originations, purchases, and sales of Title I loans to the Secretary for the purpose of obtaining or transferring insurance coverage.

6. In § 202.7, which has been redesignated § 202.8, paragraph (c)(3) is amended to correct an obsolete reference to the Title I lender approval requirements.

7. In § 202.8 (redesignated § 202.9), the introductory text to paragraph (a) is amended to clarify that, for purposes of that section, the term ''lender'' also includes loan correspondents. In addition, paragraph (b)(8) is amended to change an obsolete reference to the Under Secretary and to correct a typographical error.

Justification for Final Rulemaking

The requirements for approval as an investing lender in §§ 202.2(f) and 202.7

are based upon § 202.16, which contains the approval requirements for an investing mortgagee in HUD's mortgage insurance programs. Section 202.16 had its genesis in an interim rule published in the **Federal Register** on July 30, 1980 (45 FR 50561). One of the provisions added by the interim rule was § 203.6 to create a new class of investing mortgagees. Although the Department solicited public comments, it received no comments with regard to § 203.6.

In 1991, the Department published a proposed rule that would revise the mortgagee approval regulations and move them from part 203 to part 202 (see 56 FR 29100, June 25, 1991). In this proposed rule, the section on investing mortgagees would be redesignated as § 202.16 and would incorporate the existing requirements for investing mortgagees found in § 203.6, except that trusts would no longer be eligible to be approved as mortgagees. None of the public comments received on the June 25, 1991 proposed rule addressed the provisions of § 202.16, and the proposed rule was published in the **Federal Register** essentially without change in a final rule on December 9, 1992 (57 FR 58326).

As previously stated, creation of a new category of investing lender will provide opportunities for a wider range of financial institutions, including charitable and nonprofit associations and pension funds, to invest in Title I loans and make greater levels of capital available to these programs. Considering the past experience with the investing mortgagee provision, the Department believes that publishing a proposed rule and requesting public comments on these regulatory changes would be unnecessary. Therefore, the Department finds good cause to omit prior public procedure, and promulgates these changes as a final rule.

Findings and Other Matters

Environmental Impact

Under HUD's regulations implementing the National Environmental Policy Act at 24 CFR 50.20(k), this rule is exempt from the requirements of an environmental finding. The rule relates solely to internal administrative procedures that do not involve a development decision or affect the physical condition of project areas or building sites, but only relate to criteria and requirements for the approval of lending institutions to participate in HUD loan insurance programs.

Regulatory Flexibility Act

The Secretary, in accordance with the Regulatory Flexibility Act (5 U.S.C. 605(b)) has reviewed and approved this final rule, and in so doing certifies that this final rule would not have a significant economic impact on a substantial number of small entities. The majority of institutions that would participate in the Title I program as investing lenders are large financial institutions and pension funds.

Executive Order 12612, Federalism

The General Counsel, as the Designated Official under section 6(a) of Executive Order 12612, Federalism, has determined that this rule will not have substantial direct effects on States or their political subdivisions, or the relationship between the Federal government and the States, or on the distribution of power and responsibilities among the various levels of government. Specifically, the requirements of this rule relate solely to the approval of lending institutions, and will not impinge upon the relationship between the Federal government and State and local governments. As a result, the rule is not subject to review under the Order.

Executive Order 12606, The Family

The General Counsel, as the Designated Official under section 6(a) of Executive Order 12606, The Family, has determined that this rule will not have potential for significant impact on family formation, maintenance, or general well-being, and thus, is not subject to review under the Order. The rule relates solely to the approval of lending institutions. No significant changes in existing HUD policies or programs will result from promulgation of this rule.

Regulatory Agenda

This rule was not listed in the Department's Semiannual Agenda of Regulations published November 14, 1994 (59 FR 57632) under Executive Order 12291 and the Regulatory Flexibility Act.

Catalog of Federal Domestic Assistance

The Catalog of Federal Domestic Assistance program numbers are:

14.110 Manufactured Home Loan Insurance—Financing Purchase of Manufactured Homes as Principal Residences of Borrowers;

14.142 Property Improvement Loan Insurance for Improving All Existing Structures and Building of New Nonresidential Structures; and

14.162 Mortgage Insurance—Combination and Manufactured Home Lot Loans.

List of Subjects

24 CFR Part 25

Administrative practice and procedure, Loan programs—housing and community development, Organization and functions (Government agencies).

24 CFR Part 201

Health facilities, Historic preservation, Home improvement, Loan programs—housing and community development, Manufactured homes, Mortgage insurance, Reporting and recordkeeping requirements.

24 CFR Part 202

Administrative practice and procedure, Home improvement, Manufactured homes, Mortgage insurance, Reporting and recordkeeping requirements.

Accordingly, 24 CFR parts 25, 201, and 202 are amended as follows:

PART 25—MORTGAGEE REVIEW BOARD

1. The authority citation for 24 CFR part 25 continues to read as follows:

Authority: 12 U.S.C. 1715b; 42 U.S.C. 3535(d).

2. Section 25.2 is amended by revising the last sentence to read as follows:

§ 25.2 Establishment of Board.

* * * With respect to actions taken against Title I lenders and loan correspondents, the Mortgagee Review Board may redelegate its authority to take administrative actions for failure to remain in compliance with the requirements for approval in 24 CFR 202.3(j), 202.4(a), 202.5 (a) and (c), and 202.6 (a) and (e).

3. Section 25.3 is amended by revising the definitions of ''Lender'' and ''Mortgagee'', and by adding a definition of ''Loan correspondent'' in alphabetical order, to read as follows:

§ 25.3 Definitions.

* * * * *

Lender. A financial institution that holds a valid Title I contract of insurance and is approved by the Secretary under 24 CFR part 202 to originate, purchase, hold, service, and/or sell loans insured under 24 CFR part 201. In matters involving the imposition of civil money penalties, the term ''lender'' also includes a financial institution that holds a Title I contract of insurance that has been terminated, but that remains responsible for

servicing or selling Title I loans that it holds and is authorized to file insurance claims on such loans.

* * * * *

Loan correspondent. A financial institution approved by the Secretary to originate direct loans under Title I, section 2 of the National Housing Act, 12 U.S.C. 1703, for sale or transfer to a sponsoring lending institution that holds a valid Title I contract of insurance and that is not under suspension.

Mortgagee. For purposes of this regulation, the term ''mortgagee'' includes:

(1) The original lender under the mortgage, as that term is defined at sections 201(a) and 207(a)(1) of the National Housing Act, 12 U.S.C. 1707(a) and 1713(a)(1);

(2) A lender or loan correspondent as defined in this section; or

(3) A branch office or subsidiary of the mortgagee, lender, or loan correspondent. The term ''mortgagee'' also includes successors and assigns of the mortgagee, lender, or loan correspondent, as are approved by the Commissioner.

* * * * *

4. Section 25.9 is amended by revising paragraph (cc) to read as follows:

§ 25.9 Grounds for an administrative action.

* * * * *

(cc) Violation by a Title I lender or loan correspondent of any of the applicable provisions of this section or of 24 CFR 202.9(b).

* * * * *

PART 201—TITLE I PROPERTY IMPROVEMENT AND MANUFACTURED HOME LOANS

5. The authority citation for 24 CFR part 201 continues to read as follows:

Authority: 12 U.S.C. 1703; 42 U.S.C. 3535(d).

6. Section 201.2 is amended by revising paragraph (o) to read as follows:

§ 201.2 Definitions.

* * * * *

(o) *Lender* means a financial institution that:

(1) Holds a valid Title I contract of insurance and is approved by the Secretary under 24 CFR part 202 to originate, purchase, hold, service, and/or sell loans insured under this part; or

(2) Is under suspension or holds a Title I contract of insurance that has been terminated, but that remains responsible for servicing or selling Title I loans that it holds and is authorized to file insurance claims on such loans. For purposes of loan origination under subparts A, B, and C of this part, the term ''lender'' also includes a ''loan correspondent'' as defined in paragraph (q) of this section.

* * * * *

PART 202—APPROVAL OF LENDING INSTITUTIONS AND MORTGAGEES

7. The authority citation for 24 CFR part 202 continues to read as follows:

Authority: 12 U.S.C. 1703, 1709, and 1715b; 42 U.S.C. 3535(d).

8. Section 202.2 is amended by revising paragraph (a) and by adding a new paragraph (f) to read as follows:

§ 202.2 Definitions.

* * * * *

(a) *Lender* means a financial institution that:

(1) Holds a valid Title I contract of insurance and is approved by the Secretary under this part to originate, purchase, hold, service, and/or sell loans insured under 24 CFR part 201; or

(2) Is under suspension or holds a Title I contract of insurance that has been terminated, but that remains responsible for servicing or selling Title I loans that it holds and is authorized to file insurance claims on such loans.

* * * * *

(f) *Investing lender* means a financial institution, including a charitable or nonprofit organization or pension fund, that is approved under this part to purchase, hold, and sell loans that have been originated and insured under 24 CFR part 201. An investing lender may not originate Title I loans in its own name, and it may not service such loans except with the prior approval of the Secretary.

9. Section 202.3 is amended by revising paragraph (c) to read as follows:

§ 202.3 General approval requirements.

* * * * *

(c) It shall ensure that a corporate officer or other person authorized to bind the lender shall be responsible for reporting all originations, purchases, and sales of Title I loans to the Secretary for the purpose of obtaining or transferring insurance coverage.

* * * * *

10. Part 202 is amended by redesignating §§ 202.7 and 202.8 as §§ 202.8 and 202.9, respectively, and by adding a new § 202.7 to read as follows:

§ 202.7 Requirements for investing lenders.

In addition to the general approval requirements in § 202.3, a financial institution shall meet the following requirements to qualify as an investing lender:

(a) An investing lender shall have lawful authority to purchase, hold, and sell Title I property improvement and manufactured home loans in its own name.

(b) An investing lender shall have, or have made arrangements for, funds sufficient to support a projected investment of at least $1,000,000 in property improvement and manufactured home loans.

(c) In lieu of the staffing and facilities requirements in § 202.3(b), an investing lender shall have officers or employees who are capable of managing its activities in purchasing, holding, and selling Title I loans.

(d) An investing lender shall be responsible for the servicing of the Title I loans that it holds, through contractual or other arrangements with another lender holding a valid Title I contract of insurance, but it may not directly service such loans except with the prior approval of the Secretary.

11. Newly designated § 202.8 is amended by revising paragraph (c)(3) to read as follows:

§ 202.8 Termination of insurance contract.

* * * * *

(c) * * *

(3) A lender's right to apply for and be granted a new Title I contract of insurance, provided that the requirements for approval under this subpart are met.

12. Newly designated § 202.9 is amended by revising the paragraph (a) introductory text and paragraph (b)(8) to read as follows:

§ 202.9 Administrative actions.

(a) *General.* Administrative actions that may be taken against Title I lenders are set forth in 24 CFR 25.5 and paragraph (a) of this section. Civil money penalties may also be imposed against Title I lenders in accordance with 24 CFR 25.13 and 24 CFR part 30. For purposes of this section, the term ''lender'' shall also include loan correspondents as defined in § 202.2(b) of this subpart.

* * * * *

(b) * * *

(8) Such other reason as the Mortgagee Review Board, Secretary, Deputy Secretary, or Hearing Officer, as appropriate, determines to be justified. Such reasons include, but are not limited to, failure to exercise prudent credit judgment; failure to observe proper business practices; failure to observe proper loan origination or servicing procedures; or failure to

comply with HUD requirements or other requirements of law or regulation.

* * * * *

Dated: February 8, 1995.

Nicolas P. Retsinas,

Assistant Secretary for Housing Federal Housing Commissioner.

[FR Doc. 95–6158 Filed 3–13–95; 8:45 am]

BILLING CODE 4210–27–P

federal register

Tuesday
March 14, 1995

Part IV

Department of Housing and Urban Development

Office of the Assistant Secretary for Fair Housing and Equal Opportunity

24 CFR Part 100

Housing for Older Persons; Defining Significant Facilities and Services; Proposed Rule

DEPARTMENT OF HOUSING AND URBAN DEVELOPMENT

Office of the Assistant Secretary for Fair Housing and Equal Opportunity

24 CFR Part 100

[Docket No. R–95–1706; FR–3502–P–06]

RIN: 2529–AA66

Housing for Older Persons; Defining Significant Facilities and Services; Proposed Amendments

AGENCY: Office of the Secretary for Fair Housing and Equal Opportunity, HUD.

ACTION: Proposed rule.

SUMMARY: This proposed rule would implement section 919 of the Housing and Community Development Act of 1992. Section 919 requires the Secretary of HUD to issue ''rules defining what are 'significant facilities and services especially designed to meet the physical or social needs of older persons' required under section 807(b)(2) of the Fair Housing Act to meet the definition of the term 'housing for older persons' in such section.'' This proposed rule would amend HUD's regulations governing ''housing for older persons'', to provide the definitions required by section 919.

DATES: Comments due date: May 15, 1995.

ADDRESSES: Interested persons are invited to submit comments regarding this proposed rule to the Office of the General Counsel, Rules Docket Clerk, Room 10276, Department of Housing and Urban Development, 451 Seventh Street, SW., Washington, DC 20410–0500. Communications should refer to the above docket number and title and to the specific sections in the regulation. Facsimile (FAX) comments are not acceptable. A copy of each communication submitted will be available for public inspection and copying during regular business hours at the above address.

FOR FURTHER INFORMATION CONTACT: Sara K. Pratt, Office of Investigations, Office of Fair Housing and Equal Opportunity, Room 5204, U.S. Department of Housing and Urban Development, 451 Seventh Street, SW., Washington, DC 20410–0500, telephone (202) 708–0836. Hearing or speech-impaired individuals may call HUD's TDD number (202) 708–0113, or 1–800–877–8399 (Federal Information Relay Service TDD). (Other than the ''800'' number, these are not toll-free numbers.)

SUPPLEMENTARY INFORMATION:

I. Background

A. The Significant Facilities and Services Requirement

The Fair Housing Act (Title VIII of the Civil Rights Act of 1968, as amended by the Fair Housing Amendments Act of 1988, 42 U.S.C. 3601–19) (the Act) exempts ''housing for older persons'' from the prohibitions against discrimination because of familial status. Specifically, section 807(b)(2)(C) of the Act exempts housing intended and operated for occupancy by at least one person 55 years of age or older per unit that satisfies certain criteria. The purpose of the prohibition against discrimination on the basis of familial status and the ''housing for older persons'' exemption is to protect families with children from discrimination in housing without unfairly limiting housing choices for elderly persons (see 134 Cong. Rec. S 19722 (Aug. 1, 1988) statement of Senator Karnes).

The Department has implemented the housing for older persons exemption at 24 CFR part 100, subpart E. Congress mandated that, in determining whether housing qualifies as housing for persons 55 years of age or older, the Secretary develop regulations which require at least the following factors:

(1) The existence of significant facilities and services specifically designed to meet the physical or social needs of older persons, or if the provision of such facilities is not practicable, that such housing is necessary to provide important housing opportunities for older persons; and

(2) that at least 80 percent of the units are occupied by at least one person 55 years of age or older per unit; and

(3) the publication of, and adherence to, policies and procedures which demonstrate an intent by the owner or manager to provide housing for persons 55 years of age or older.

Section 919 of the Housing and Community Development Act of 1992 (Pub. L. 102–550, approved October 28, 1992), requires the Secretary of HUD to issue a rule further defining what are ''significant facilities and services especially designed to meet the physical or social needs of older persons'' required under section 807(b)(2) of the Fair Housing Act to meet the definition of the term ''housing for older persons.''

B. The July 7, 1994 Proposed Rule

On July 7, 1994 (59 FR 34902) the Department published for public comment a proposed rule intended to implement section 919 of the Housing and Community Development Act of 1992. Customarily proposed rules provide for a 60-day public comment period. However, in order to ensure broad public input into the rulemaking process, the Department granted a 90-day comment period. As the October 5, 1994 public comment deadline approached it became clear to the Department that there was significant public interest in the proposed rule. On September 26, 1994 (59 FR 49035), the Department extended the comment period to November 30, 1994.

The Department also scheduled public meetings to hear from those affected by the proposed rule. Five such meetings were held across the country: Fontana, California on August 15, 1994; Tampa, Florida on August 25, 1994; Phoenix, Arizona on September 29, 1994; Washington, DC on October 6, 1994 and; Spokane, Washington on November 17, 1994. Transcribed records of these meetings were prepared and made part of the public comment docket.

The July 7, 1994 proposed rule was of great interest to many seniors. By close of business on November 30, 1994, 15,219 comments had been received. Based on the written comments received on the proposed rule, and the comments received at the five public meetings, the Department decided to make significant changes to the July 7, 1994 proposed rule.

On December 12, 1994 (59 FR 64104), the Department published a notice in the **Federal Register** announcing it would not proceed to final rulemaking on the July 7, 1994 proposed rule. Instead, as a result of the significant changes to the July 7, 1994 rule, the Department is issuing this new proposed rule, which addresses the issues raised by the commenters and solicits additional public comment.

II. Overview of Proposed Rule

Like the July 7, 1994 rule, this proposed rule would implement the rulemaking required by section 919 of the Housing and Community Development Act of 1992. Specifically, this proposed rule would revise the 55-or-over housing currently set forth in § 100.304(b)(1). A new § 100.305 would be added and would address the standards housing providers must meet in order to qualify as 55-or-over housing. A new § 100.306 would be added and would address the requirement for ''significant facilities and services specifically designed to meet the physical or social needs of

older persons.''[1] A new § 100.307 would be added and would set forth the standards for housing providers choosing to self-certify their compliance with the Act's requirements. In addition to adding these three sections, the substance of existing § 100.304(b)(2) would be amended and located in new § 100.310. Existing subsection § 100.304(e) would be deleted and existing subsections §§ 100.304(c)(1) and 100.304(d) would be amended and provide the substance of new § 100.315. Existing subsection § 100.304(c)(2) would be amended and redesignated as new § 100.316.

The Department recognizes that the majority of seniors are healthy and lead active and independent lives. In developing this proposed regulation, the Department has rejected the assumption that all residents of senior housing are frail or disabled. This proposed rule does not require that a facility or service be accessible to the disabled in order to be classified as ''significant'' or ''specifically designed to meet the physical or social needs of older persons.'' Neither does this proposed regulation require that a housing provider furnish congregate dining areas, nursing services, or expensive and unwanted facilities to qualify for the housing for older persons exemption.

In developing this proposed regulation, the Department desires to provide as much certainty as possible regarding the determination that housing qualifies as housing for older persons. It has sought to structure the regulations to allow both housing providers and protected classes alike to ascertain with confidence whether a community qualifies under the Act.

Proposed § 100.306 sets forth a diverse ''menu'' of facilities and services which a community may choose to provide. The facilities and services are listed under twelve broad categories (e.g. Social Needs, Leisure Needs, Educational Needs). In order to qualify as 55-or-over housing, the community must provide at least two facilities or services from five of the categories, for a total of at least ten facilities or services. Both facilities and services must be provided.

Once a community has met the requirements of proposed § 100.306, a new § 100.307 would permit the community to self-certify that it qualifies under the Act. Absent evidence to the contrary, the Department will assume that those communities which have chosen to self-certify are in compliance with the Act's requirements.

However, the Department does not wish to provide certainty in complying with the requirements of the Act at the expense of flexibility. The Department has concluded that a flexible standard is necessary in order to reflect regional variations in services and facilities that distinguish housing for older persons from other similar housing, as well as variations determined by the geography of the site or by the differences in the nature or cost of the housing in question. The Department believes that the ''menu'' set forth in proposed § 100.306 is sufficiently broad to accommodate regional differences in the need for facilities and services.

In addition, the Department recognizes that housing for older persons is not limited to the affluent. Therefore, § 100.306's menu includes many facilities and services which are not costly and may be provided by volunteers. Furthermore, the proposed rule allows facilities and services to be provided away from the housing premises, so long as there is sufficient transportation to ensure that the off-premise facility or service is truly accessible to the community residents.

As is the case with other exemptions to civil rights statutes and other exemptions under the Act, the burden of demonstrating that the ''older persons'' exemption applies rests on the party asserting the exemption. Part of that party's burden in establishing qualification for the exemption requires affirmatively demonstrating through credible and objective evidence that the requirements for the exemption exist as of the date of an alleged violation of the Act. The Department believes that the Act imposes a strict burden upon a person claiming the exemption to provide credible and objective evidence showing that the facilities and services offered by the housing provider were designed, constructed or adapted to meet the particularized needs of older persons. In order to be considered as sufficient to qualify a housing facility for the exemption, the evidence must show that the housing in question is clearly distinguished from the bulk of other housing (except for other older persons housing) in a particular area, by the existence of those facilities and services which set the housing facility apart as housing intended for and operated as housing for older persons. Without such evidence, the familial status prohibitions of the Act will apply. However, absent evidence to the contrary, the Department will assume that communities which have chosen to self-certify under proposed § 100.307 are in compliance with the Act's requirements.

III. Proposed Amendments

New § 100.305—Criteria

New § 100.305 proposes to establish the criteria by which a community will be determined to qualify under the ''housing for older persons'' exemption to the Act's requirements.

New § 100.306—Significant Facilities and Services Specifically Designed for Older Persons

New § 100.306 proposes to set forth the standards by which to ascertain whether a facility or service is ''significant'' or is ''specifically designed to meet the physical or social needs of older persons.'' New § 100.306 sets forth a ''menu'' of facilities and services a housing provider may choose to furnish. A housing provider which provides ten items from the menu (two items from five of the menu categories), is deemed to be in compliance with the Act's requirements.

New § 100.307—Self Certification

New § 100.307 sets forth the requirements for those communities which choose to self-certify their compliance with the Act. Absent evidence to the contrary, the Department will assume that a community that has elected to self-certify qualifies as 55-or-over housing.

New § 100.310—Impracticability

Existing § 100.304(b)(2), which would be redesignated as new § 100.310, would be revised by adding the following language as the introductory text to the current provisions contained in paragraph (b)(2):

> The provisions regarding familial status in this part shall not apply to housing intended and operated for occupancy by at least one person 55 years of age or older per unit, provided that the person or entity affirmatively proves through credible and objective evidence that the housing satisfies the requirements of §§ 100.305, 100.306, 100.315 and 100.316 or 100.310, 100.315 and 100.316. Housing satisfies the requirements of § 100.310 if * * *

New § 100.315—80 percent occupancy

Existing § 100.304(e) would be deleted and existing §§ 100.304(c)(1) and 100.304(d) would be combined as

[1] The language of section 919 contains the word ''especially'': ''* * * rules defining what are 'significant facilities and services *especially* designed to meet the physical or social needs of older persons' required under section 807(b)(2) of the Fair Housing Act to meet the definition of the term 'housing for older person' in such section.'' (emphasis added) This proposed rule uses the word ''specifically'' rather than the word ''especially'' to comply with congressional intent and reflect the actual language of section 807(b)(2) of the Fair Housing Act.

new § 100.315. The following language would be added to the new § 100.315:

The provisions regarding familial status in this part shall not apply to housing intended and operated for occupancy by at least one person 55 years of age or older per unit, provided that the person or entity affirmatively proves through credible and objective evidence that the housing satisfies the requirements of §§ 100.305, 100.306, 100.315 and 100.316 or 100.310, 100.315 and 100.316. Housing satisfies the requirements of this § 100.315 if * * *

Additionally, there is also new language further describing how a housing provider may meet the 55-or-over exemption if it does not have 80 percent of its units occupied by at least one person who is 55 and older.

New § 100.316—Intent to Provide Housing for Older Persons

Existing § 100.304(c)(2), which would be redesignated as new § 100.316, would be revised by adding the following language as the introductory text to new § 100.316:

The provisions regarding familial status in this part shall not apply to housing intended and operated for occupancy by at least one person 55 years of age or older per unit, provided that the person or entity affirmatively proves through credible and objective evidence that the housing satisfies the requirements of §§ 100.305, 100.306, 100.315 and 100.316 or 100.310, 100.315 and 100.316. Housing satisfies the requirements of § 100.316 if * * *

With respect to the use of age verification procedures, while the Department does not require the use of any particular type of age verification, nor does it require the use of age verification procedures at all, if such procedures are utilized, they must be reliable and consistently utilized.

IV. Other Matters

A. Environmental Impact

A Finding of No Significant Impact with respect to the environment has been made in accordance with HUD regulations at 24 CFR part 50, which implements section 102(2)(C) of the National Environmental Policy Act of 1969 (NEPA). This Finding of No Significant Impact is available for public inspection between 7:30 a.m. and 5:30 p.m. weekdays in the Office of the Rules Docket Clerk, Office of the General Counsel, Department of Housing and Urban Development, Room 10276, 451 Seventh Street, SW., Washington, DC 20410–0500.

B. Executive Order 12866

This proposed rule was reviewed by the Office of Management and Budget (OMB) under Executive Order 12866 on Regulatory Planning and Review, issued by the President on September 30, 1993. Any changes made in this proposed rule as a result of that review are clearly identified in the docket file, which is available for public inspection in the office of the Department's Rules Docket Clerk, Room 10276, 451 Seventh Street, SW., Washington, DC 20410–0500.

C. Impact on Small Entities

The Secretary, in accordance with the Regulatory Flexibility Act (5 U.S.C. 605(b)), has reviewed this proposed rule before publication and, by approving it, certifies that the proposed rule will not have a significant impact on a substantial number of small entities. The proposed rule would implement section 919 of the Housing and Community Development Act of 1992, which requires the Secretary of HUD to further define the term ''significant facilities and services specifically designed to meet the physical or social needs of older persons.'' The Department anticipates that the proposed rule will have an impact on some small housing providers. However, the number of small housing providers affected is not considered to be so great as to constitute a significant economic impact on a substantial number of small entities.

D. Executive Order 12606, the Family

The General Counsel, as the Designated Official under Executive Order 12606, The Family, has determined that this proposed rule does not have potential for significant impact on family-formation, maintenance, and general well-being, and, thus is not subject to review under the Order.

E. Executive Order 12612, Federalism

The General Counsel, as the Designated Official under section 6(a) of Executive Order 12612, Federalism, has determined that this proposed rule would not have substantial, direct effects on States, on their political subdivisions, or on their relationship with the Federal government, or on the distribution of power and responsibilities among the various levels of government. The Fair Housing Act, and section 919 of the Housing and Community Development Act of 1992 direct HUD to provide further guidance on the meaning of significant facilities and services so that States, local governments, and housing providers will have a better understanding of what housing is exempt from the Fair Housing Act's prohibition against discrimination on the basis of familial status.

F. Regulatory Agenda

This proposed rule was listed as sequence 1860 in the Department's Semiannual Regulatory Agenda, published on November 14, 1994 (59 FR 57632, 57637) under Executive Order 12866 and the Regulatory Flexibility Act.

List of Subjects in 24 CFR Part 100

Aged, Fair housing, Individuals with disabilities, Mortgages, Reporting and recordkeeping requirements.

Accordingly, 24 CFR part 100, subpart E, would be amended as follows:

PART 100—DISCRIMINATORY CONDUCT UNDER THE FAIR HOUSING ACT

1. The authority citation for part 100 be revised to read as follows:

Authority: 42 U.S.C. 3535(d) and 3600–3620.

Subpart E—Housing for Older Persons

2. In subpart E, § 100.304 would be revised, and new §§ 100.305, 100.306, 100.307, 100.310, 100.315 and 100.316 would be added, to read as follows:

§ 100.304 55 or over housing.

(a) The provisions regarding familial status in this part shall not apply to housing intended and operated for occupancy by at least one person 55 years of age or older per unit, provided that, at the time of an alleged violation of the Act, the housing satisfies the requirements of:

(1) Sections 100.304, 100.305, 100.306, 100.315 and 100.316; or

(2) Sections 100.310, 100.315 and 100.316.

(b) With reference to complaints filed pursuant to the Act, this means that the person or entity claiming the exemption must affirmatively prove by a preponderance of evidence as of the date of the alleged violation of the Act that the housing meets the requirements of paragraph (a) of this section.

(c) For purposes of this part, ''*older persons*'' means persons 55 years of age or older.

(d) For purposes of this part, ''*housing provider*'' means:

(1) The owner or manager of a housing facility; or

(2) The owner or manager of the common and public use areas of a housing facility, where the dwelling units are individually owned.

(3) The term ''housing provider'' may include any person or entity which operates a housing facility, including but not limited to homeowner's associations or resident associations.

(e) For purposes of this part, ''occupied by'' means one or more persons over the age of 55 actually occupying a unit at the time of an alleged violation of the Act and for at least 60 days in the preceding 365 day period.

(f) With reference to self-certifications of compliance with the provisions of this part, the housing provider claiming the exemption for 55 and older housing may demonstrate publicly, by the posting of one of the notices described in § 100.307, compliance with the provisions of this part.

§ 100.305 Criteria.

(a) The provisions regarding familial status in this part shall not apply to housing intended and operated for occupancy by at least one person 55 years of age or older per unit, pursuant to this part.

(b) The housing shall have significant facilities and services specifically designed to meet the physical or social needs of older persons as described in § 100.306.

(c) At least 80 percent of the units in the housing shall be occupied by at least one person who is at least 55 years of age or older as described in § 100.315.

(d) The housing provider shall publish and adhere to policies and procedures which demonstrate an intent by the housing provider to provide housing for older persons as described in § 100.316. The publication of policies and procedures describing an intent to provide housing as ''adult housing'' shall not suffice for this purpose.

§ 100.306 Significant facilities and services specifically designed for older persons.

(a) The provisions regarding familial status in this part shall not apply to housing intended and operated for occupancy by at least one person 55 years of age or older per unit, *provided that* the person or entity asserting the exemption affirmatively demonstrates through credible and objective evidence that facilities and services specifically designed to meet the needs of older persons are ''significant''. Significant facilities and services which are specifically designed for older persons are those which actually or predictably benefit the health, safety, social, educational or leisure needs of older persons.

(b) The facilities and services provided by a housing provider are significant and specifically designed to meet the housing needs of older persons when the housing provider meets the criteria found in paragraphs (c), (d), and (e) of this section and complies with the criteria found in paragraph (f) of this section.

(c) A housing provider provides significant facilities and services if it makes available, directly or indirectly, at least 2 facilities or services of the facilities described in paragraph (d) of this section, in paragraph (d)(10) of this section (category 10) or in paragraph (d)(11) of this section (category 11).

(d) Facilities and services which may be considered for purposes of qualifying for the 55 and older housing exemption are the following:

(1) Category #1 (Social Needs)

Social and Recreational Services provided on a regular, organized basis

—softball, golf, shuffleboard tournaments, or similar team activity
—bridge club, card games, chess, checkers
—exercise classes—low-impact, stretching, tai-chi, swim-therapy
—bingo
—fellowship meetings
—musical theater group
—dances, square dancing, polka, ballroom dancing
—monthly or weekly potluck dinners, breakfasts, luncheons, coffees
—coordinated holiday parties for residents
—Lions club, clubs or classes for sewing, needlepoint, art, gardening, music, books, golf, bowling, photography, travel, etc.
—cooking classes
—crafts classes: ceramics, macrame, woodworking, jewelry, quilting, painting
—field trips—bowling, sightseeing, concerts, plays, hiking, shopping outlets
—fashion shows
—on-site movies or other theatrical events
—liaison/coordination with activities at community-wide senior centers and activities
—emergency meal service for residents who are ill or in need
—organized travel opportunities

(2) Category #2 (Educational Needs)

Continuing education activities

—at least monthly presentations on subjects such as health care, nutrition, stress management, medicare, insurance, social security, tax preparation, vacation planning, gardening, crime prevention
—consumer protection education
—regularly offered CPR classes
—regularly offered language study classes
—regularly offered videotapes on health care
—courses available at local educational institutions

(3) Category #3 (Educational Needs)

Information and counseling services

—providing new residents with package of information about local services of interest to seniors
—bulletin board for exchange of information or services
—printed resident directory provided to each resident
—bus schedules
—free cable TV programs information to residents internal or external support groups for residents
—seminars on the aging process, estate planning, dealing with death or other issues affecting older persons
—on-site legal services
—informational sessions on fire safety, mental health issues, political and environmental issues
—seminars on governmental benefits programs

(4) Category #4 (Physical Needs)

Homemaker services

—employees assist with housework or yardwork
—organized committee of residents to perform light household tasks or yard work for those who cannot do them themselves
—referrals to housecleaning services
—bill-paying services
—pet care/pet therapy services
—minor home repair service
—tool loan service

(5) Category #5 (Safety Needs)

Outside maintenance/health and safety services

—on-staff medical personnel with first aid/CPR training
—on-staff repair, maintenance and painting services
—meals on wheels
—lawn care and grass cutting, shrubbery and tree trimming
—snow shoveling and plowing
—referrals to doctors or other health care professionals
—regular system to contact residents who are house-bound to make sure they are o.k.
—referrals for transportation
—referrals to income tax preparer
—referrals to repair and maintenance services
—security guards/patrols, organizing neighborhood or block watch
—organizing committee of residents to do household repairs and yard work for those who cannot do them themselves
—exterior lighting—alarm systems monitoring
—vacation house watch
—limited access to property by controlled access gate or similar system

(6) Category #6 (Health Needs)

Emergency and preventative health care programs

—meetings about nutrition, back care, breast cancer/self-examination/mammogram, prostate cancer screening, vision care, or other health care topics (see continuing education)
—monthly blood pressure checks
—annual flu vaccine shots available
—periodic vision or hearing tests
—staff or volunteers pick up food from social services for mobility impaired seniors
—organizing committees of residents to do errands for people who become ill and/or to stay with sick persons while their spouses do errands

—emergency telephone network, staff or volunteers monitor people who have serious medical problems
—doctor/medical facilities located within two miles of facility
—health care equipment pool for resident use

(7) Category #7 (Social/Health Needs)

Congregate dining

—available congregate dining for at least one meal each day
—sit-down service
—special menus for dietary needs
—activities conducted in conjunction with congregate dining

(8) Category #8 (Transportation)

Transportation to facilitate access to social services

—transportation provided to doctors' offices, shopping, religious services, outside social or recreational activities
—public bus stop or train station within walking distance
—organized system to provide transportation for residents who cannot drive
—sign-up board for shared transportation needs
—shared ride services to social events, functions, medical care, shopping

(9) Category #9 (Social Needs)

Services to encourage and assist residents to use available facilities and services

—volunteer or staff activity planner
—lifeguards, swimming or water aerobics instructors
—dance or exercise instructors
—crafts instructors
—newsletters, newspapers or flyers informing residents of activities, trips, clubs, etc.
—monthly calendar of events
—resident council or committees to encourage participation in activities

(10) Category #10 (Leisure Needs)

Social and Recreational Facilities

—clubhouse, communal kitchen, or communal dining area
—library with large print books or subscriptions to publications targeted to older persons
—swimming pool, sauna or whirlpool
—recreation or game room, arts and crafts room, community room or meeting room
—television room for communal use
—exercise equipment
—ping pong, pool tables, shuffleboard courts, horseshoe pits or bocce ball (with functional equipment)
—golf course
—stage, piano and dance floor
—picnic area, picnic tables, barbecue grills
—woodworking shop
—restaurant for resident use
—bank
—lawyer's office
—travel agency
—convenience store
—barber shop
—dry cleaners
—hair salon
—lapidary
—kiln
—fishing pond

(11) Category #11 (Health/Safety Needs)

Accessible physical environment

—accessible clubhouse
—at least one accessible bathroom facility in public and common use areas
—ramps (curbs or drainage ditches are cut to allow wheelchair/walker access)
—ramped sidewalks in public and common use areas; stairs at a minimum
—benches in public and common use areas
—assigned and designated parking spaces, including handicapped parking
—accessible swimming pool (i.e., ramped entrance to pool area)
—accessible management office
—accessible dining area or activity area
—vans, buses available with wheelchair lifts or easy access for persons with mobility difficulties
—lift to assist in swimming pool use

(12) Category #12 (Social, Leisure, Health, Safety or Educational Needs)

Other

—Any facility or service which is not listed above but which is designed to meet the health, safety, social or leisure needs of persons who are 55 and older and which is actually available to and used by residents of the property.

(e) A housing provider provides significant facilities and services if the facilities and services are provided on the premises by paid staff, resident volunteers, or by agencies, entities or persons other than the housing provider. A housing provider provides significant facilities and services if the facilities or services are provided off the premises by paid staff, resident volunteers, or by agencies, entities or persons other than the housing provider on the premises of the housing or off the premises, *provided that* if facilities or services are made available off the premises, the housing provider, through paid staff, resident volunteers, or by agencies, entities or persons other than the housing provider, shall make available transportation services or coordination of information and transportation resources which ensure that residents are aware of and have ready access to such facilities or services.

(f) In determining whether a housing provider provides significant facilities and services, the Department will evaluate each facility or service that meets the requirements of § 100.305 by the following criteria to determine whether the facilities in the aggregate and the services in the aggregate are ''significant'':

(1) The extent to which a facility or service can accommodate the older population of the housing facility. The capacity of each facility or service specifically designed to meet the physical or social needs of older persons depends upon but is not limited to such factors as:

(i) The size of the facility in relationship to the scope of the service offered;

(ii) The length of time during which the facility or service is made available or the service is offered;

(iii) The frequency with which the facility or service is made available or the service is offered; and

(iv) Whether the facility or service is offered only at one location or there are a number of locations at which the facility is made available or at which the service is offered.

(2) The extent to which the facility or service will be of benefit to older persons, given the climate and physical setting of the housing facility.

(3) The extent to which the facility or service is actually usable by and regularly available to residents on a day-to-day basis.

§ 100.307 Self-Certification.

(a) A housing provider may indicate, by display of a notice complying with this part, its intent to provide housing for older persons in substantially the same form as that attached as Appendix 1 to this part.

(b) Such a notice shall be provided by the Department, and shall include, at a minimum, a certification of compliance with § 100.315 and an indication of the housing provider's intent to provide, and its certification that it does in fact provide, facilities and services which comply with § 100.306.

(c) Such a notice shall be signed by one or more housing providers, with authority to sign.

(d) Such a notice shall be signed under penalty of perjury of the laws of the United States.

(e) Such a notice shall be posted in every public or common area where housing transactions are conducted.

(f) A copy of a current self-certification shall be considered by the Department to be sufficient evidence of compliance with the Act to allow the publication of advertisements, notices or the making of other statements as evidencing the operation of the property in question as housing for older persons and as excluding families with children as described in section 807(b)(2) of the Act, but not as conclusive evidence of eligibility for the housing for older persons exemption.

§ 100.310 Impracticability.

(a) The provisions regarding familial status in this part shall not apply to

housing intended and operated for occupancy by at least one person 55 years of age or older per unit, provided that the person or entity affirmatively demonstrates through credible and objective evidence that the housing satisfies the requirements of §§ 100.305, 100.306, 100.315 and 100.316 or §§ 100.310, 100.315 and 100.316. Housing satisfies the requirements of § 100.310 if it is not practicable to provide significant facilities and services designed to meet the physical or social needs of older persons and the housing facility is necessary to provide important housing opportunities for older persons.

(b) In order to satisfy the requirements of § 100.310 the housing provider must affirmatively demonstrate through credible and objective evidence that the provision of significant facilities and services designed to meet the physical or social needs of older persons would result in depriving older persons in the relevant geographic area of needed and desired housing. The following factors, among others, are relevant in meeting the requirements of § 100.310:

(1) Whether the owner or manager of the housing facility has endeavored to provide significant facilities and services designed to meet the physical or social needs of older persons either by the owner or by some other entity. Demonstrating that such services and facilities are expensive to provide is not alone sufficient to demonstrate that the provision of such services is not practicable.

(2) The amount of rent charged, if the dwellings are rented, or the price of the dwellings, if they are offered for sale.

(3) The geographical or other physical limitations inherent in the property which makes the provisions of facilities or services impracticable.

(4) The income range of the residents of the housing facility.

(5) The demand for housing for older persons in the relevant geographic area.

(6) The vacancy rate of the housing facility.

(7) The certification of 90 percent of the residents of the housing facility that a particular category of facility or service is not necessary or desired. Such certification shall be maintained as part of the official records of the housing facility, be made available for public inspection, and updated by certifications from new residents of the housing facility.

(8) The availability of other similarly priced housing for older persons in the relevant geographic area. If similarly priced housing for older persons with significant facilities and services is reasonably available in the relevant geographic area then the housing facility does not meet the requirements of § 100.310.

§ 100.315 80 percent occupancy.

(a) The provisions regarding familial status in this part shall not apply to housing intended and operated for occupancy by at least one person 55 years of age or older per unit, provided that the person or entity demonstrates through credible and objective evidence that housing satisfies the requirements of §§ 100.305, 100.306, 100.315 and 100.316 or §§ 100.310, 100.315 and 100.316. Housing satisfies the requirements of § 100.315 if at least 80 percent of the units in the housing facility are occupied by at least one person 55 years of age or older per unit except that a newly constructed housing facility for first occupancy after March 12, 1989 need not comply with § 100.315 until 25 percent of the units in the facility are occupied.

(b) Housing satisfies the requirements of this section even though:

(1) On September 13, 1988, under 80 percent of the occupied units in the housing facility are occupied by at least one person 55 years of age or older per unit, provided that at least 80 percent of the units that are occupied by new occupants after September 13, 1988 are occupied by at least one person 55 years of age or older.

(2) There are unoccupied units, provided that at least 80 percent of the occupied units are occupied by at least one person 55 years of age or over.

(3) There are units occupied by employees of the housing (and family members residing in the same unit) who are under 55 years of age provided they perform substantial duties directly related to the management or maintenance of the housing.

(4) There are insufficient units occupied by at least one person 55 years of age or over to meet the 80 percent requirement, but the housing provider, at the time the exemption is asserted:

(i) Reserves all unoccupied units for occupancy by at least one person 55 years of age or older until at least 80 percent of the units are occupied by at least one person who is 55 and older; and

(ii) Meets the requirements of:

(A) Sections 100.305, 100.306, 100.307, and 100.316; or

(B) Sections 100.310, 100.315, and 100.316.

(iii) Where application of the 80 percent rule results in a fraction of a unit, that unit shall be considered to be included in the units which must be occupied by at least one person who is 55 or older.

§ 100.316 Intent to provide housing for older persons.

(a) The provisions regarding familial status in this part shall not apply to housing intended and operated for occupancy by at least one person 55 years of age or older per unit, provided that the person or entity proves that the housing satisfies the requirements of §§ 100.305, 100.306, 100.315 and 100.316 or §§ 100.310, 100.315 and 100.316. Housing satisfies the requirements of § 100.316 if the owner or manager of a housing facility publishes and adheres to policies and procedures which demonstrate an intent by the housing provider to provide housing for persons 55 years of age or older.

(b) The following factors, among others, are relevant in determining whether the owner or manager of a housing facility has complied with the requirements of § 100.316:

(1) The manner in which the housing facility is described to prospective residents.

(2) The nature of any advertising designed to attract prospective residents.

(3) Age verification procedures.

(4) Lease provisions.

(5) Written rules and regulations.

(6) Actual practices of the owner or manager in enforcing relevant lease provisions and relevant rules or regulations.

(7) The public posting of the self-certification described in this part.

3. Appendix 1 is added to part 100 to read as follows:

Appendix 1 to Part 100—Housing For Older Persons—Self-Certification

BILLING CODE 4210–28–P

U.S. Department of Housing and Urban Development

Housing for Older Persons — Self-Certification

The Undersigned hereby certifies that

intends to meet the criteria set forth in the Federal Fair Housing Act in order to qualify as housing for older persons.

This housing facility provides the following facilities and/or services:

Category #1 (Social Needs)
Social and Recreational Services provided on a regular, organized basis

- ❒ softball, golf, shuffleboard tournaments, or similar team activities
- ❒ bridge club, card games, chess, checkers
- ❒ exercise classes - low-impact, stretching, t'ai-chi, swim-therapy
- ❒ bingo
- ❒ fellowship meetings
- ❒ musical theater group
- ❒ dances, square dancing, polka, ballroom dancing
- ❒ monthly or weely potluck dinners, breakfasts, luncheons, coffees
- ❒ coordinated holiday parties for residents
- ❒ Lions club, clubs or classes for sewing, needlepoint, art, gardening, music, books, golf, bowling, photography, travel, etc.
- ❒ cooking classes
- ❒ crafts classes: ceramics, macrame, woodworking, jewelry, quilting, painting
- ❒ field trips - bowling, sightseeing, concerts, plays, hiking, shopping outlets
- ❒ fashion shows
- ❒ on-site movies or other theatrical events
- ❒ liaison/coordination with activities at community-wide senior centers and activities
- ❒ emergency meal service for residents who are ill or in need
- ❒ organized travel opportunities

Category #2 (Educational Needs)
Continuing education activities

- ❒ at least monthly presentations on subjects such as health care, nutrition, stress management, medicare, insurance, social security, tax preparation, vacation planning, gardening, crime prevention
- ❒ consumer protection education
- ❒ regularly offered CPR classes
- ❒ regularly offered language study classes
- ❒ regularly offered videotapes on health care
- ❒ courses available at local educational institutions

Category #3 (Educational Needs)
Information and counseling services

- ❒ providing new residents with package of information about local services of interest to seniors
- ❒ bulletin board for exchange of information or services
- ❒ printed resident directory provided to each resident
- ❒ bus schedules
- ❒ free cable TV programs information to residents
- ❒ internal or external support groups for residents
- ❒ seminars on the aging process, estate planning, dealing with death or other issues affecting older persons
- ❒ on-site legal services
- ❒ informational sessions on fire safety, mental health issues, political and environmental issues
- ❒ seminars on governmental benefits programs

Category #4 (Physical Needs)
Homemaker services

- ❒ employees assist with housework or yardwork
- ❒ organized committee of residents to perform light household tasks or yard work for those who cannot do them themselves
- ❒ referrals to housecleaning services
- ❒ bill-paying services
- ❒ pet care/pet therapy services
- ❒ minor home repair service
- ❒ tool loan service

Category #5 (Safety Needs)
Outside maintenance/health and safety services

- ❒ on-staff medical personnel with first aid/CPR training
- ❒ on-staff repair, maintenance and painting services
- ❒ meals on wheels
- ❒ lawn care and grass cutting, shrubbery and tree trimming
- ❒ snow shoveling and plowing
- ❒ referrals to doctors or other health care professionals
- ❒ regular system to contact residents who are house-bound to make sure they are o.k.
- ❒ referrals for transportation
- ❒ referrals to income tax preparer
- ❒ referrals to repair and maintenance services
- ❒ security guards/patrols, organizing neighborhood or block watch
- ❒ organizing committee of residents to do household repairs and yard work for those who cannot do them themselves
- ❒ exterior lighting - alarm systems monitoring
- ❒ vacation house watch
- ❒ limited access to property by controlled access gate or similar system

Category #6 (Health Needs)
Emergency and preventative health care programs

- ❒ meetings about nutrition, back care, breast cancer/self-examination/mammogram, prostate cancer screening, vision care, or other health care topics (see continuing education)
- ❒ monthly blood pressure checks
- ❒ annual flu vaccine shots available
- ❒ periodic vision or hearing tests
- ❒ staff or volunteers pick up food from social services for mobility impaired seniors
- ❒ organizing committees of residents to do errands for people who become ill and/or to stay with sick persons while their spouses do errands
- ❒ emergency telephone network, staff or volunteers monitor people who have serious medical problems
- ❒ doctor/medical facilities located within two miles of facility
- ❒ health care equipment pool for resident use

This housing facility has determined to provide and does in fact provide at least 10 of the following services and facilities by offering at least 2 facilities or services in at least 5 of the following categories, including specifically at least two facilities from category 10 or category 11 (and requires that at least 80% of its units be occupied by at least one person who is 55 years of age or older). As housing for older persons, we claim an exemption from the provisions of the Fair Housing Act regarding discrimination based on familial status -- that is, the presence of persons under the age of 18.

Category #7 (Social/Health Needs)
Congregate dining

- ❒ available congregate dining for at least one meal each day
- ❒ sit-down service
- ❒ special menus for dietary needs
- ❒ activities conducted in conjunction with congregate dining

Category #8 (Transportation)
Transportation to facilitate access to social services

- ❒ transportation provided to doctors' offices, shopping, religious services, outside social or recreational activities
- ❒ public bus stop or train station within walking distance
- ❒ organized system to provide transportation for residents who cannot drive
- ❒ sign-up board for shared transportation needs
- ❒ shared ride services to social events, functions, medical care, shopping

Category #9 (Social Needs)
Services to encourage and assist residents to use available facilities and services

- ❒ volunteer or staff activity planner
- ❒ lifeguards, swimming or water aerobics instructors
- ❒ dance or exercise instructors
- ❒ crafts instructors
- ❒ newsletters, newspapers or flyers informing residents of activities, trips, clubs, etc.
- ❒ monthly calendar of events
- ❒ resident council or committees to encourage participation in activities

Category #10 (Leisure Needs)
Social and Recreational Facilities

- ❒ clubhouse, communal kitchen, or communal dining area
- ❒ library with large print books or subscriptions to publications targeted to older persons
- ❒ swimming pool, sauna or whirlpool
- ❒ recreation or game room, arts and crafts room, community room or meeting room
- ❒ television room for communal use
- ❒ exercise equipment
- ❒ ping pong, pool tables, shuffleboard courts, horseshoe pits or bocce ball (with functional equipment)
- ❒ golf course
- ❒ stage, piano and dance floor
- ❒ picnic area, picnic tables, barbecue grills
- ❒ woodworking shop
- ❒ restaurant for resident use
- ❒ bank
- ❒ lawyer's office
- ❒ travel agency
- ❒ convenience store
- ❒ barber shop
- ❒ dry cleaners
- ❒ hair salon
- ❒ lapidary
- ❒ kiln
- ❒ fishing pond

Category #11 (Health/Safety Needs)
Accessible physical environment

- ❒ accessible clubhouse
- ❒ at least one accessible bathroom facility in public and common use areas
- ❒ ramps (curbs or drainage ditches are cut to allow wheelchair/walker access)
- ❒ ramped sidewalks in public and common use areas; stairs at a minimum
- ❒ benches in public and common use areas
- ❒ assigned and designated parking spaces, including handicapped parking
- ❒ accessible swimming pool (i.e., ramped entrance to pool area)
- ❒ accessible management office
- ❒ accessible dining area or activity area
- ❒ vans, buses available with wheelchair lifts or easy access for persons with mobility difficulties
- ❒ Lift to assist in swimming pool use

Category #12 (Social, Leisure, Health, Safety or Educational Needs)
Other

- ❒ Any facility or service which is not listed above but which is designed to meet the health, safety, social or leisure needs of persons who are 55 and older and which is actually available to and used by residents of the property. (Describe)

SIGNED UNDER PENALTY OF PERJURY OF THE LAWS OF THE UNITED STATES OF AMERICA:

_____
signature

Authorized representative of

_____

Dated: February 8, 1995.

Roberta Achtenberg,

Assistant Secretary for Fair Housing and Equal Opportunity.

[FR Doc. 95–5968 Filed 3–9–95; 2:57 pm]

BILLING CODE 4210–28–C

federal register

Tuesday
March 14, 1995

Part V

Department of Housing and Urban Development

Office of the Assistant Secretary for Public and Indian Housing

Public Housing Family Investment Centers After-School Program: Notice of Demonstration; Notice

DEPARTMENT OF HOUSING AND URBAN DEVELOPMENT

Office of the Assistant Secretary for Public and Indian Housing

[Docket No. N–95–3886; FR–3871–N–01]

Public Housing Family Investment Centers After-School Program: Notice of Demonstration

AGENCY: Office of the Assistant Secretary for Public and Indian Housing, HUD.

ACTION: Notice of demonstration program.

SUMMARY: This Notice announces the Department's intention to contribute up to $3.5 million from the Family Investment Center (FIC) program to assist in developing and expanding effective after-school programs that provide safe environments that help children to develop their full potential while permitting their parents to receive education or training or go to work. These programs will be located at housing authorities in Los Angeles, CA; Oakland, CA; Philadelphia, PA; and Kansas City, MO. The purpose of this effort is to demonstrate ways to promote, through supervised activities and joint community and private sector collaboration, the long-term welfare of children ages 7 to 13 living in public housing communities. This demonstration will create safe havens where children can develop skills, knowledge, and competencies, while simultaneously exposing the children to different lifestyle choices that will assist in their positive development. These intervention programs will pull together public and private resources to link adults who work with children to build self-confidence, provide homework counseling, tutoring, mentoring, and support as an alternative to gang-related activities that exist in and around public housing communities. This demonstration will also improve accessibility and supportive service coordination efforts among public housing authorities, local schools systems, the colleges and universities system, and the public and private sectors. This notice provides guidelines for the use of these funds and invites comments on the proposed demonstration.

DATES: Comment due date: April 13, 1995. Applications will be due May 30, 1995, unless as a result of significant changes made in the application requirements upon consideration of public comments, the Department publishes a separate notice changing that deadline.

ADDRESSES: Interested persons are invited to submit comments regarding this rule to the Rules Docket Clerk, Office of General Counsel, Room 10276, Department of Housing and Urban Development, 451 Seventh Street, SW, Washington, DC 20410–0500. Communications should refer to the above docket number and title. Facsimile (FAX) comments are *not* acceptable. A copy of each communication submitted will be available for public inspection and copying between 7:30 a.m. and 5:30 p.m. weekdays at the above address.

FOR FURTHER INFORMATION CONTACT: Beverly Hardy, Housing Management Specialist, Office of Community Relations and Involvement, Department of Housing and Urban Development, 451 Seventh Street SW, Room 4112, Washington, DC 20410; telephone number (202) 708–4214 (TDD users may call the Federal Information Relay Service at (202) 708–9300 or 1–800–877–8339). (Other than the ''800'' number, telephone numbers are not toll free.)

SUPPLEMENTARY INFORMATION:

Paperwork Reduction Act Statement

The information collection requirements contained in this notice have been approved by the Office of Management and Budget, under section 3504(h) of the Paperwork Reduction Act of 1980 (44 U.S.C. 3501–3520), and assigned OMB control number 2577–0189.

Authority

Section 22 of the United States Housing Act of 1937 (42 U.S.C. 1437t) provides for the establishment of Family Investment Centers (FICs). As indicated in the FIC NOFA published on February 15, 1995 (60 FR 8900), the Department intends to use $3.5 million of the funds available for the FIC program in FY 1995 for purposes of demonstrating ways for families living in public and Indian housing in a neighborhood undergoing a concentrated effort of local revitalization to gain access to 4–H After-School programs for children to develop the self-confidence needed to reach their full potential and achieve success.

The demonstration will enable housing authorities to create after-school programs for children who may otherwise have no supervised place to go during non-school hours. These funds will be used to: (1) Cover administrative costs and other eligible activities; (2) mobilize public and private resources to expand and improve delivery of supportive services; (3) improve the capacity of management to assess the supportive services and training needs; and (4) provide for supportive services and related training that cannot otherwise be funded. The Department expects that this funding will demonstrate the importance of comprehensive support services in contributing to the local neighborhood revitalization.

The FIC, as described in Section 22 of the Housing Act of 1937 and the FIC NOFA published on February 15, is to ''provide families living in public and Indian housing with better access to education and job opportunities to achieve self-sufficiency and independence.'' Appropriately, the FIC After-School Program provides safe havens for children that will help their parents to take better advantage of education, job opportunities and social services to achieve self-sufficiency and independence, as well as directly helping the children to develop similar skills, knowledge, and competencies, while simultaneously exposing them to different lifestyle choices that will assist in their positive development. This demonstration will be a part of a comprehensive strategy to bring together resources among housing authorities, local school systems, the colleges and universities system, and the public/private sector.

In accordance with the requirements of section 470(a) of the Housing and Urban-Rural Recovery Act of 1983 (42 U.S.C. 3542), this notice describes the proposed demonstration and invites public comment. Any changes made in this demonstration as a result of the Department's consideration of public comments, and any extension of time for the commitment of funds necessary because of these changes, also will be published in the **Federal Register**. The Department will not commit funds for the proposed demonstration until after the latest of: (1) The date the Department has considered any comments received in response to this notice; (2) May 15, 1995, which is 60 days after today's publication date; and (3) the date the Department has received and approved proposals that meet the requirements imposed in this notice and any subsequent notice announcing changes in the demonstration. Applications will be due May 30, 1995, unless as a result of significant changes made in the application requirements upon consideration of public comments, the Department publishes a separate notice changing that deadline.

Background of Demonstration

The 4–H After-School program is a partnership between the public and

private sector to bring organized, after-school activities to children ages 7–13 who live in public housing communities with strong private sector support. The funds will be used to expand the Los Angeles model and replicate the program in Oakland, CA; Philadelphia, PA; and Kansas City, MO. The Los Angeles model is a strong partnership among the private sector; HUD; Extension Service, United States Department of Agriculture (USDA); University of California Cooperative Extension Service; and the National 4–H Council. The program is coordinated by the UNOCAL Petroleum Corporation and the Los Angeles 4–H Council, is backed by the Los Angeles City Council, and draws on the resources of VISTA, the University of California, the Housing Authority of the City of Los Angeles, the Los Angeles Unified School District, and HUD.

Inner cities are experiencing a serious crisis with youth gangs. The demonstration will involve joint investment by the public and private sectors to provide counseling, tutoring, mentoring, and other supportive services designed to reduce gang-related activities. HUD expects that this funding will demonstrate the success of public/private partnerships and commitments in public housing communities that address specific, long-term counseling needs, thereby resulting in reduced gang-related activities and enhanced lifestyle choices. This demonstration serves ''at-risk'' children living in public housing communities, 2–5 times per week on a year-round basis. The program is intended to create a nurturing environment that offers a positive alternative to unstructured, unsupervised free time in neighborhoods where gang-related activities are prevalent.

The system of services and outreach planned by the community will not only increase the intensity and variety of youth activities and supportive services available to neighborhood residents, it will also establish a delivery system involving residents who will work with neighbors to ensure progression towards resolving gang-related activities. Residents will work with trained coordinators to manage the program. Together with service providers, the public and private sector will form ''Community Vision Teams'' at the community level to bring together the multiple supportive service programs and financial supporters.

As a result of this demonstration, HUD expects that the children participating will be more likely to avoid the lure of the gangs and instead choose to stay in school with a goal of employment and economic independence. HUD also expects that the parents of participating children will be encouraged to pursue training, education, and employment opportunities leading to self-sufficiency, because their children will be in secure environments while the parents are away from home.

Because of the working partnership taking place at the local level in Los Angeles, there is an ideal demonstration environment for service delivery integrated across existing Federal and private sector program lines. Too often the requirements of Federal programs have dictated institutional structures at the local level that stand in the way of comprehensive delivery of housing and services to those who need these services to achieve self-sufficiency. This coordination creates a rare opportunity for the Department to test the capacity of its existing programs to serve in the context of a truly integrated and comprehensive transformation effort.

HUD has chosen four public housing agencies that already have partnerships in place to develop a comprehensive strategy to provide safe environments for children ages 7–13 living in public housing communities. This will happen through cooperative arrangements among housing authorities, local school systems, the colleges and universities system, the active involvement of supportive service agencies, and strong private sector support. The strategy must provide activities that link adults who work with children to build self-confidence, provide homework counseling, tutoring, mentoring, and supportive services during non-school hours.

The key factors that make Oakland, CA; Philadelphia, PA; and Kansas City, MO, unique have been the strong interest of the housing authorities of those cities, USDA, the University Cooperative Extension Service, the National 4–H Council, and the private sector to form Community Vision Teams that bring together educational and other public and private resources for the benefit of public housing children who otherwise have no safe place to go during non-school hours.

Funding

For purposes of this demonstration, the Department will make up to $3.5 million available to the Los Angeles, Oakland, Philadelphia, and Kansas City Housing Authorities for use in establishing and expanding FIC 4–H After-School programs in the public housing neighborhoods. The funding will be used in accordance with the statutory requirements of the FIC program, and as established in this notice and any subsequent notice issued after the comment period has closed, to contribute to an integrated network of supportive services for public housing and other neighborhood residents.

Most of the funding provided under this demonstration will be used for administration and service coordination by the Community Vision Team and for core support services. The 4–H After-School activities and supportive services will help children to overcome personal difficulties that inhibit their readiness to learn and be successful in school. Core support services and Community Vision Team activities supported by FIC funding provided under this demonstration will be targeted to ensure that a proportionate number of public housing families are served.

In addition to the FIC funding proposed under this demonstration, public and private organizations will support the demonstration project. This network will deliver necessary services to public housing children as part of the larger community, through the community-wide system developed by the housing authorities, the University Extension provider, and the private sector. The Department believes that the institutional integration—of which this demonstration will be one part—will enhance the quality, continuity, and impact of support provided to public housing children and their families. The private sector entity must have committed funding and in-kind donations to the project. The Department expects that this demonstration will leverage more public and private funding as the effort progresses, with private funding ultimately being responsible for contributing total financial support.

Eligible Activities

Funds may be used for the following activities:

(1) The provision of not more than 15 percent of the total cost of supportive services (which may be provided directly to eligible residents by the HA or by contract or lease through other appropriate agencies or providers), but only if the HA demonstrates that:

(a) The supportive services are appropriate to improve the access of eligible residents to educational opportunities; and

(b) The HA has made diligent efforts to use or obtain other available resources to fund or provide such services; and

(2) The employment of service coordinators.

Eligible Costs

Activities that may be funded and carried out by an HA include, but are not limited to, the following:

(1) *Administrative costs.* Costs that are reasonable and include maintenance, utility costs (telephone, fax, light, gas), postage, printing, copier, building leasing/rent costs, Service Coordinator/Case Manager, accounting staff, initial equipment purchase (i.e., desks, chairs, computer equipment, tools, etc.).

(2) *Other program costs.* Costs that include advertisement, reimbursement for participant travel costs, travel stipends, vehicle lease (to transport participants to program-related activities), insurance liability costs (personal property/property off HA site) and technical assistance (T/A contractor fees, etc.).

Applicable Requirements

The PHA will be required to meet the applicable programmatic and application requirements set out in the NOFA for Public and Indian Housing Family Investment Centers (published at 60 FR 8900, February 15, 1995) and any subsequent notice that is published after the comment period for this notice has closed. When applicable, recipients of funding under this demonstration also are subject to the certifications, findings, determinations, and requirements listed in the ''Other Matters'' section of the FIC NOFA.

In order to receive the funding proposed in this notice, each housing authority must submit an original and one copy of a proposal describing its program in detail. Proposals must be prepared in accordance with instructions in the FIC Application Kit (available by contacting the person listed in **FOR FURTHER INFORMATION CONTACT,** above) and must include:

(1) A brief summary of the proposed program (not to exceed 150 words), including a brief description of the key program components;

(2) A copy of the signed agreement(s) between the PHA, 4–H Extension Service, United States Department of Agriculture (USDA), the private sector entity, and the community vision team members for each demonstration site;

(3) A description of how the eligible participants will be recruited, with an accompanying implementation schedule;

(4) A description of supervised activities and joint community and private sector youth intervention projects;

(5) A description of resident (including parents) involvement in the program's planning and implementation;

(6) A description (based on projected needs) of the type of supportive services that are to be provided over at least a 5-year period after the initial receipt of funding under this program;

(7) A description of efforts to use or obtain other available resources to fund or provide supportive services that enhance educational opportunities;

(8) A description of efforts to improve accessibility and provide supportive services coordination efforts among public housing authorities, local schools systems, the college and university system, and the public and private sectors;

(9) A description of how the program will be evaluated, describing the baseline indicators against which success will be measured and replicated;

(10) A description of plans for continuing operation of the program and the provision of services to residents after completion of the demonstration phase;

(11) A narrative on the location and accessibility of the 4–H After-School facility; and

(12) A narrative, budget, timetable, and list of milestones for the 5-year period. Milestones shall include number of families to be served, types of services, and dollar amounts to be allocated over the 5-year period.

Authority: 42 U.S.C. 1437t and 3535(d).

Dated: March 3, 1995.

Joseph Shuldiner,

Assistant Secretary for Public and Indian Housing.

[FR Doc. 95–6156 Filed 3–13–95; 8:45 am]

BILLING CODE 4210–33–P

federal register

Tuesday
March 14, 1995

Part VI

Department of Housing and Urban Development

24 CFR Part 201

Title I Property Improvement and Manufactured Home Loans; Electronic Payment of Title I Insurance Charges; Final Rule

DEPARTMENT OF HOUSING AND URBAN DEVELOPMENT

Office of the Assistant Secretary for Housing—Federal Housing Commissioner

24 CFR Part 201

[Docket No. R–95–1765; FR–3823–F–01]

RIN 2502–AG41

Title I Property Improvement and Manufactured Home Loans; Electronic Payment of Title I Insurance Charges

AGENCY: Office of the Assistant Secretary for Housing—Federal Housing Commissioner, HUD.

ACTION: Final rule.

SUMMARY: This final rule amends the regulations governing the property improvement and manufactured home loan insurance programs under Title I, section 2 of the National Housing Act. This rule permits the Secretary to require that Title I insurance charge payments be made through the Automated Clearing House (ACH) program. The purpose of this rule is to improve the efficiency of the Federal Housing Administration (FHA) Title I insurance program and reduce costs to HUD lenders.

EFFECTIVE DATE: April 13, 1995.

FOR FURTHER INFORMATION CONTACT: James A. White, Acting Director, Title I Accounting and Servicing Division, Room 3100, Department of Housing and Urban Development, 470 L'Enfant Plaza, East, Washington, DC 20024; telephone (202) 755–7545, extension 105; or (202) 708–4594 (voice/TDD). (These are not toll-free telephone numbers.)

SUPPLEMENTARY INFORMATION:

I. Background

In 1985 the Department of Housing and Urban Development (HUD) implemented the Automated Clearing House (ACH) program, with voluntary participation by mortgagees, for the payment of up-front mortgage insurance premiums for single-family mortgages that are obligations of the Mutual Mortgage Insurance Fund.

On June 9, 1992, HUD published a proposed rule in the **Federal Register** (57 FR 24424) that would amend the Title II regulations to permit the FHA Commissioner to require that all such premium payments be made through ACH. Five comments were received in response to that proposed rule. Two comments were from automated clearing house associations, and expressed general approval of HUD's proposal. Two comments were from national trade associations; both of these were favorable to the proposal, although one expressed a number of technical operational concerns. The fifth comment, from a small lender, expressed a similar concern to one raised by one of the trade associations, namely the financial impact on small lenders.

On March 8, 1993, HUD published a final rule in the **Federal Register** (58 FR 12901) that was unchanged from the proposed rule. However, because of the concerns communicated in the comments, HUD allowed a one-year grace period for institutions making 300 or fewer new FHA single family loans per year. Also in 1993, HUD implemented the ACH program on a voluntary basis for the payment of Title I insurance charges.

The ACH system is designed to process the collection of Title I insurance charges from lenders, using remote terminals instead of sending checks and HUD–646 forms by mail. The lender's terminal operator dials a number that ties the terminal or personal computer into the collection agent's telenet system. The collection agent originates an ACH file of debit transactions based on the data keyed by the lender.

Each day at 6 p.m. eastern time, the collection agent originates an ACH file of debit transactions based on the data keyed by the lender. When the debit transactions have been processed, the ACH will transmit the Title I insurance charge data to HUD's Title I Insurance System. Through this ACH process, the debit amount is drawn electronically from the designated lender's bank account the next day, or can be ''warehoused'' and drawn on the lender's bank account on a future date. The corresponding credit entry will update HUD's account.

Without ACH, HUD personnel must correct all incorrect data submitted by lenders, and the HUD system must prepare, key, and then reprocess the corrected transaction. The ACH transfer system eliminates most errors. Built-in edits will verify data and produce an error message for lenders entering their payment data via terminal/personal computer, and an error fax confirmation for lenders entering their payment data via mainframe to mainframe. The ACH transfer system uses the lender contract number as part of the logon procedure. Any error in the lender contract number results in the ACH transfer system rejecting the logon attempt. In addition, the ACH transfer system will verify that the payment amount equals the billing amount less the exceptions.

Penalty charges and interest charges will be processed in the same manner as in the past and billed on the next statement. Penalty charges are levied if payment is received later than 25 days after the billing date. Interest charges are assessed when payment is received on or after the 55th day after the billing date. For the ACH program, penalty charge and interest charge amounts are automatically calculated by the system.

ACH provides lenders with numerous tangible benefits that should reduce their servicing costs. The advantages of ACH are:

(1) Control of payment timing—The use of ACH debits and credits can increase control of payment initiation and funds availability;

(2) Banking costs are reduced—ACH transfers cost less than paper checks and wire transfers;

(3) Accounting reconciliation is reduced—Payments are computerized and cash application is more automated than with manual systems;

(4) On-line edits can reduce data errors created by manual recording;

(5) The chance of lost/late mail is eliminated;

(6) ACH payments are fully traceable;

(7) The premium payments are drawn down electronically from the lender's designated bank account.

Because ACH provides lenders as well as HUD with numerous tangible benefits that reduce servicing costs, HUD intends to use ACH as the sole method for collecting Title I insurance charges. HUD believes that this rule does not have a significant economic impact on the smaller lending community for two reasons. First, lenders need only have access to a personal computer to participate in the ACH program, and personal computing is pervasive within the industry. Second, implementation of this process will be phased in and coordinated with lenders on an individual basis. This rule implements a program that will enhance operations and be cost beneficial for all Title I lenders.

Under this final rule, insurance charges will be collected by the ACH program for all property improvement and manufactured home loan insurance programs under Title I, section 2 of the National Housing Act (12 U.S.C. 1703). Instructions implementing this rule will be transmitted to all Title I lenders at least 30 days before payment of Title I insurance charges by ACH will be required. The instructions will provide for a grace period of up to one year for compliance by small lenders with portfolios of fewer than 200 loans.

II. Justification for Final Rulemaking

In general, HUD publishes a rule for public comment before issuing a rule for effect, in accordance with its own regulations on rulemaking (24 CFR part 10). However, part 10 provides for exceptions from that general rule if HUD finds good cause to omit advance notice and public participation. The good cause requirement is satisfied when prior public procedure is ''impracticable, unnecessary, or contrary to the public interest'' (24 CFR 10.1). HUD finds that good cause exists to publish this rule for effect without first soliciting public comment. Due to HUD's experience in promulgating the amendment to the Title II regulations for payment of insurance premiums through ACH, and the voluntary participation in the ACH program by some Title I lenders, HUD finds that prior public procedure is unnecessary.

III. Other Matters

Environmental Impact

In accordance with 40 CFR 1508.4 of the regulations of the Council on Environmental Quality, and 24 CFR 50.20(k) of the HUD regulations, this rule is categorically excluded from the requirements of the National Environmental Policy Act. The rule relates solely to internal administrative procedures, the content of which do not involve a development decision or affect the physical condition of project areas or building sites, but only relate to the performance of accounting, auditing, and fiscal functions.

Regulatory Flexibility Act

The Secretary, in accordance with the Regulatory Flexibility Act (5 U.S.C. 605(b)), has reviewed this rule before publication and by approving it certifies that this rule does not have a significant economic impact on a substantial number of small entities. The rule implements a program that will enhance operations and be cost beneficial for all Title I lenders. In addition, the plan to phase in the program with lenders on an individual basis assures against undue burdens on small organizations.

Regulatory Agenda

This rule was not listed in the Department's Semiannual Agenda of Regulations published on November 14, 1994 (59 FR 57632) in accordance with Executive Order 12866 and the Regulatory Flexibility Act.

Executive Order 12612, Federalism

The General Counsel, as the Designated Official under section 6(a) of Executive Order 12612, Federalism, has determined that the policies contained in this rule will not have substantial direct effects on States or their political subdivisions, or the relationship between the Federal government and the States, or on the distribution of power and responsibilities among the various levels of government. As a result, the rule is not subject to review under the Order. Specifically, the requirements of this rule are directed to lenders, and do not impinge upon the relationship between the Federal government and State and local governments.

Executive Order 12606, The Family

The General Counsel, as the Designated Official under Executive Order 12606, The Family, has determined that this rule does not have potential for significant impact on family formation, maintenance, and general well-being, and thus is not subject to review under the Order. No significant change in existing HUD policies or programs will result from promulgation of this rule, as those policies and programs relate to family concerns.

Catalog of Federal Domestic Assistance

Program numbers are:

14.110 Manufactured Home Loan Insurance—Financing Purchase of Manufactured Homes as Principal Residences of Borrowers;

14.142 Property Improvement Loan Insurance for Improving All Existing Structures and Building of New Nonresidential Structures; and

14.162 Mortgage Insurance—Combination and Manufactured Home Lot Loans.

List of Subjects in 24 CFR Part 201

Health facilities, Historic preservation, Home improvement, Loan programs—housing and community development, Manufactured homes, Mortgage insurance, Reporting and recordkeeping requirements.

Accordingly, 24 CFR part 201 is amended as follows:

PART 201—TITLE I PROPERTY IMPROVEMENT AND MANUFACTURED HOME LOANS

1. The authority citation for 24 CFR part 201 continues to read as set forth below:

Authority: 12 U.S.C. 1703; 42 U.S.C. 3535(d).

2. A new paragraph (b)(4) is added to § 201.31 to read as follows:

§ 201.31 Insurance charge.

* * * * *

(b) * * *

(4) The Secretary may require that loan insurance charges be remitted electronically. Instructions implementing this requirement shall be communicated to all affected lenders.

* * * * *

Dated: February 8, 1995.

Nicolas P. Retsinas,

Assistant Secretary for Housing—Federal Housing Commissioner.

[FR Doc. 95–6157 Filed 3–13–95; 8:45 am]

BILLING CODE 4210–27–P

federal register

Tuesday
March 14, 1995

Part VII

Department of the Interior

Office of Surface Mining Reclamation and Enforcement

30 CFR Part VII

Establishment of an Advisory Committee to Negotiate Regulations; Proposed Rule

DEPARTMENT OF THE INTERIOR

Office of Surface Mining Reclamation and Enforcement

30 CFR Part VII

Establishment of an Advisory Committee to Negotiate Regulations

AGENCY: Office of Surface Mining Reclamation and Enforcement, Interior.

ACTION: Proposed rule.

SUMMARY: Notice is hereby given that the Secretary of the Interior is administratively establishing an advisory committee to be known as the Office of Surface Mining Reclamation and Enforcement Negotiated Rulemaking Committee on Coal Refuse Disposal. This notice is published in accordance with the Federal Advisory Committee Act (FACA), and the Negotiated Rulemaking Act of 1990. The notice is attached as an appendix.

The Office of Surface Mining Reclamation and Enforcement (OSM) seeks comments on the establishment of the advisory committee chartered to negotiate a rule on Coal Refuse Disposal, and nominations for its membership. Issues to be considered by the advisory committee include general permits, baseline hydrologic studies and hydrologic requirements at refuse sites, the application of valid existing rights to coal refuse sites, the collection of Abandoned Mine Land fees from companies processing coal refuse for reuse, and other environmental protection standards. OSM anticipates that the negotiation process will help resolve at least some of these outstanding issues.

DATES: Interested parties may file comments and/or nominations for Committee Membership on or before April 13, 1995.

ADDRESSES: *Written Comments:* Hand-deliver to the Office of Surface Mining Reclamation and Enforcement, Administrative Record, room 660, 800 North Capitol Street, Washington, DC: or mail to the Office of Surface Mining Reclamation and Enforcement, Administrative Record, room 660 NC, 1951 Constitution Avenue NW., Washington, DC 20240. Comments may also be sent electronically through the Internet to: OSMRULES@OSMRE.GOV.

FOR FURTHER INFORMATION CONTACT: Melanie Wilson, Office of Surface Mining Reclamation and Enforcement, 1951 Constitution Avenue NW., room 52, Washington, DC 20240, (202) 208–4609. For the hearing impaired, contact TTD (202) 208–2737.

SUPPLEMENTARY INFORMATION:

I. Negotiated Rulemaking
II. Subject and Scope of Rule for Negotiated Rulemaking
III. How Does Negotiated Rulemaking Work?
IV. What is the Purpose of the Committee?
V. How are Committee Members Selected?
VI. Who Has Been Contacted to Participate in this Process?
VII. Will All of These Groups Participate in the Regulatory Negotiation Process?
VIII. How Can You Participate in the Process?

I. Negotiated Rulemaking

The purpose of a negotiated rulemaking committee (or ''reg neg'' as it is frequently called) is to develop a consensus on a proposed rule. Before establishing such a committee, § 583(a) of the Negotiated Rulemaking Act directs the head of an agency to consider whether—

- There is a need for the rule
- There are a limited number of identifiable interests that will be affected by the rule
- There is a reasonable likelihood that a committee can be convened with a balanced representation of persons who can adequately represent those interests and are willing to negotiate in good faith to reach a consensus on a proposed rule
- There is a reasonable likelihood that a committee will reach consensus on the proposed rule within a fixed period of time
- The negotiated rulemaking will not unreasonably delay the notice of proposed rulemaking and the issuance of the final rule
- The agency has adequate resources and is willing to commit such resources, including technical assistance, to the committee, and
- The agency, to the maximum extent possible consistent with the legal obligations, will use the consensus of the committee with respect to the proposed rule as the basis for the rule proposed by the agency for notice and comment.

''Consensus'' in tern means the unanimous concurrence among the interests represented on the negotiated rulemaking committee unless the committee explicitly adopts some other definition. Thus, under the Negotiated Rulemaking Act, each interest on the committee has a veto: nothing can be adopted by the committee over the dissent of an interest. That has served to provide important protection for the parties and to help the parties focus on developing an entire regulation. This definition also means that the agency itself participates in the negotiations in a manner similar to that of any other party.

Negotiated rulemaking has been used quite successfully to address highly controversial subjects in a practical manner. For that reason, OSM thought it would be an appropriate process to use for the coal refuse rule.

II. Subject and Scope of Rule for Negotiated Rulemaking

Numerous coal refuse piles exist throughout the coal fields in the eastern United States. These piles are a major source of aesthetic and environmental degradation. A significant number of these piles, however, still contain large, potentially marketable quantities of coal. Modern technology enables the recovery of the coal in these piles, and in some cases the direct utilization of the material, for example in refuse burning power plants, electric power generation and co-generation facilities.

Under current law and policies, permitting and performance standards are the same for refuse pile operations as for any other mining operations. Section 2503 of the Energy Policy Act of 1992 requires the publication of new regulations on permitting and performance standards that distinguish between (1) operations that reprocess abandoned coal refuse on-site and (2) those that completely remove abandoned coal refuse from a site for the direct use of such coal refuse or for the reprocessing of such coal refuse at another location. These standards must recognize the distinct differences between these operations and other surface coal mining operations.

The committee will try to reach consensus on the major issues that could not be resolved in the draft rulemaking, specifically:

- Environmental protection standards
- Permits
- The application of valid existing rights to coal refuse sites
- Abandoned mine land fees

If the committee is able to reach consensus on these issues, the committee will propose a rule on coal refuse.

In addition, the committee may also address other appropriate remining issues that may arise from the discussion of coal refuse.

III. How Does Negotiated Rulemaking Work?

Negotiated Rulemaking typically occurs in two stages:

1. *The Convening Stage.* During this stage, an outside neutral party assists the agency in selecting participants to ensure balanced representation and helps the agency identify which specific issues should be negotiated. He or she educates the participants about the

negotiation process and attempts to get the parties to commit to the product that will be produced. Convening typically takes one or two months.

2. *The Negotiation Stage.* This stage typically takes six to eight months. Again, a neutral outside party is often used to facilitate group meetings, which are generally held once a month. The goal of this stage is to produce regulatory language and, if possible, preamble text.

IV. What is the Purpose of the Committee?

The purpose of the Committee is to provide a forum to discuss the regulatory and reclamation issues of concern to the public, primacy States which regulate surface coal mining, environmental groups, coal mine region residents, industry, the Congress, and other State and Federal agencies.

V. How Are Committee Members Selected?

The Secretary of the Interior will appoint 20–25 members to the Committee to represent a cross-section of those who are interested in and directly affected by this proposed rulemaking. OSM has sought the advice of an outside neutral professional convener in an effort to carefully monitor membership to ensure that there is a balance among those interests affected by the Surface Mining Control and Reclamation Act of 1977 (30 U.S.C. 1201 *et seq.*). Members will represent the following segments of the population in appropriate mix and balance for the task at hand.

Categories of Members

- Environmental groups
- Representatives from the coal refuse removal and reprocessing industry
- Primary states with responsibility for regulating surface coal mining operations
- General coal mining industry
- Citizens/residents of areas with significant deposits of coal refuse

VI. Who Has Been Contacted to Participate in this Process?

The following parties were identified as potentially affected interests and were contacted during the convening stage of the process.

Environmental Groups

Citizen's Coal Council
Kentucky Resources Council, Inc.
National Wildlife Federation
Western Pennsylvania Land Conservancy
West Virginia Highlands Conservancy
Armstrong Conservation District

Industry

Inter-Power/AHICon Partners
Western Kentucky Coal Association
Kentucky Coal Association
Pennsylvania Coal Association
WV Mining & Reclamation Assoc.
Gilberton Power Company
Inter-Power Development Corporation
National Coal Association
American Mining Congress
Consol, Inc.

States

Interstate Mining Compact Commission
West Virginia Department of Environmental Protection
Pennsylvania Department of Reclamation
Illinois Division of Land Reclamation
Abandoned Mine Lands Reclamation Council
Kentucky Department for Surface Mining

Federal

Office of Surface Mining
Environmental Protection Agency

VII. Will All of These Groups Participate in the Regulatory Negotiation Process?

No. First, the Secretary of the Interior will select committee members based on whether the entity will be substantially affected by this rule. Second, some of the groups, for various reasons, may decide not to participate in this specific regulatory negotiation.

VIII. How Can You Participate in the Process?

If you believe that your interests may not have been adequately represented by any of the parties listed above you may apply for, or nominate another entity for membership on the committee to represent your interests. Each application for nomination must include:

1. The name of the applicant or nominee and a description of the interests the entity will represent.
2. Evidence that the applicant or nominee is authorized to represent parties related to the interests the entity proposes to represent.
3. A written commitment that the applicant or nominee shall actively participate in good faith in the development of the rule under consideration.
4. The reasons that the entities specified above do not adequately represent the interests of the entity submitting the application or nomination.

The OSM will advise the Secretary whether that entity should be added to the group. The decision will be based on whether the entity would be substantially affected by the rule and whether that entity is already adequately represented in the negotiating group.

IX. What Happens After the Committee Members are Selected?

Once membership in the Committee has been selected, an organizational meeting will be held to develop the specific issues and groundrules for how the negotiation will be conducted. The location and dates of future meetings will be published in the **Federal Register**. Meetings will be open to the public unless specifically noted as being closed in the **Federal Register**, as authorized by FACA.

X. Conclusion

OSM requests public comment on whether: (1) It should establish a Federal Advisory Commission, (2) it has properly identified the interests that are significantly affected by the key issues listed above, (3) the suggested committee membership reflects a balanced representation of these interests, and (4) regulatory negotiation is appropriate for this rulemaking.

Dated: March 2, 1995.

Bob Armstrong,

Assistant Secretary, Land and Minerals Management.

Appendix

This notice is published in accordance with Section 9(a) (2) of the Federal Advisory Committee Act (FACA), 5 U.S.C. App. (1988). Following consultation with the General Services Administration and the Office of the Management and Budget, notice is hereby given that the Secretary of the Interior is administratively establishing an advisory committee to be known as the Office of Surface Mining Reclamation and Enforcement Negotiated Rulemaking Committee on Coal Refuse Disposal.

The purpose of the Committee is to provide a forum to discuss a variety of regulatory and reclamation issues of concern to the public, primacy States which regulate surface coal mining, environmental groups, coal mine region residents, industry, the Congress, and other State and Federal agencies.

The Secretary of the Interior will appoint 20–25 members to the Committee to represent a cross-section of those who are interested in and directly affected by regulatory and reclamation activities. OSM has sought the advice of an outside neutral professional convener in an effort to carefully monitor membership to ensure that there is a balance among those interests affected by the Surface Mining Control and Reclamation Act of 1977 (30 U.S.C. 1201 et seq.). Members will represent the following segments of the population in appropriate mix and balance for the task at hand.

Categories of Members:

* Environmental groups;

* Representatives from the coal refuse removal and reprocessing industry;

* Primacy States with responsibility for regulating surface coal mining operations;

* General coal mining industry; and

* Citizens/residents of areas with significant deposits of coal refuse.

Certification

I hereby certify that the administrative establishment of the Office of Surface Mining Reclamation and Enforcement Negotiated Rulemaking Committee on Coal Refuse Disposal is necessary and in the public interest in connection with the performance of duties imposed on the Department of the Interior by the Surface Mining Control and Reclamation Act of 1977 (30 U.S.C. 1201 et. seq.).

Dated: August 18, 1994.

Bruce Babbitt,

Secretary of the Interior.

[FR Doc. 95–6226 Filed 3–13–95; 8:45 am]

BILLING CODE 4310–05–M

federal register

Tuesday
March 14, 1995

Part VIII

Department of Transportation

Federal Aviation Administration

14 CFR Parts 121, 125, and 135

Increased Flight Data Recorder Parameters; Proposed Rule

DEPARTMENT OF TRANSPORTATION

Federal Aviation Administration

14 CFR Parts 121, 125, and 135

[Docket No. 28109, Notice No. 95–4]

Increased Flight Data Recorder Parameters

AGENCY: Federal Aviation Administration, DOT.

ACTION: Notice of public meeting and request for comments.

SUMMARY: The FAA is soliciting comments from the public, aircraft manufacturers and operators, and manufacturers of flight data recorders (FDR's) on the recent recommendations issued by the National Transportation Safety Board (NTSB) on increased FDR parameters. The FAA seeks comment on any aspect of the NTSB recommendations, including the potential safety benefits and financial costs for each of the NTSB recommendations. Comments received on the recommendations will assist the Federal Aviation Administration (FAA) in preparing potential regulatory action and in analyzing specific exceptions or alternatives that should be considered.

DATES: Comments must be received on or before March 31, 1995.

A public meeting to discuss the NTSB recommendations will be held on April 20, 1995, starting at 9 a.m.

ADDRESSES: Comments on the NTSB recommendations discussed in this document should be mailed or delivered, in triplicate, to: Federal Aviation Administration, Attention: Rules Docket (AGC–200), 800 Independence Ave., SW., Washington, DC 20591. Comments must be marked: Docket No. 28109. Comments may also be sent electronically to the following Internet address: nprmcmts@mail.hq.faa.gov. Comments may be examined in room 915G weekdays between 8:30 a.m. and 5 p.m., except Federal holidays.

The public meeting will be held at the FAA National Headquarters, 800 Independence Ave., SW., Washington, DC 20591.

FOR FURTHER INFORMATION CONTACT: Requests to present a statement at the meeting or questions regarding the logistics of the meeting should be directed to Jeanne Trapani, Office of Rulemaking, 800 Independence Avenue, SW., Washington, DC 20591; telephone (202) 267–7624.

Questions concerning the subject matter of the meeting should be directed to Frank Rock, Technical Analysis Branch (AIR–120), Aircraft Certification Service, Federal Aviation Administration, 800 Independence Avenue, SW., Washington, DC 20591, Telephone (202) 267–9567.

SUPPLEMENTARY INFORMATION:

Participation at the Meeting

Requests from persons who wish to present oral statements at the public meeting should be received by the FAA no later than April 15, 1995. Such requests should be submitted to Jeanne Trapani at the address listed in the section entitled **FOR FURTHER INFORMATION CONTACT** and should include a written summary of oral remarks to be presented. Requests received after the date specified above will be scheduled if time is available during the meeting; however, the name of those individuals may not appear on the written agenda for the public meeting.

The FAA will prepare an agenda of speakers who will be available at the meeting. Every effort will be made to accommodate as many speakers as possible. The amount of time allocated to each speaker may be less than the amount of time requested.

Background

On February 22, 1995, the NTSB issued three recommendations to the FAA as a result of its investigation of accidents and incidents that, in the opinion of the NTSB, have demonstrated that more information about flight control parameters should be recorded by FDR's. A copy of the NTSB Safety Recommendation letter of February 22, 1995, has been placed in the FAA docket. Contrasting accident/incident data involving airplanes with 5- and 128-parameter FDR's, the NTSB indicated that investigations were greatly aided by the availability of enhanced recorded information. The NTSB recommended that the FAA require operators to retrofit certain airplanes currently in operation with enhanced FDR's and require certain enhanced FDR's on newly-manufactured airplanes. The NTSB also issued recommendations to operators and manufacturers of aircraft operated under parts 121, 125, and 135. However, these recommendations will not be addressed at the public meeting. See attachment A of NTSB Safety Recommendation letter dated February 22, 1995.

The NTSB stated that among the additional flight control parameters that are needed are parameters that pertain to the flight control inputs and control surface positions. Acknowledging that the cost of increasing the recorded parameters on FDR's would necessitate a significant monetary investment, the NTSB stated that public safety outweighs the costs.

With this notice, the FAA is soliciting comments on the following NTSB recommendations:

> Require that each Boeing 737 airplane operated under 14 CFR parts 121 or 125 be equipped, by December 31, 1995, with a flight data recorder system that records, as a minimum, the parameters required by current regulations applicable to that airplane plus the following parameters (recorded at the sampling rates specified in ''Proposed Minimum FDR Parameter Requirements for Airplanes in Service'' [see Table 1 below]): lateral acceleration; flight control inputs for pitch, roll, and yaw; and primary flight control surface positions for pitch, roll, and yaw.
>
> Amend, by December 31, 1995, 14 CFR 121.343, 125.225, and 135.152 to require that Boeing 727 airplanes, Lockheed L–1011 airplanes, and all transport category airplanes operated under 14 CFR parts 121, 125, or 135 whose type certificate applies to airplanes still in production, be equipped to record on a flight data recorder system, as a minimum, the parameters listed in ''Proposed Minimum FDR Parameter Requirements for Airplanes in Service'' plus any other parameters required by current regulations applicable to each individual airplane. Specify that the airplanes be so equipped by January 1, 1998, or by the later date when they meet Stage 3 noise requirements but, regardless of Stage 3 compliance status, no later than December 31, 1999.
>
> Amend, by December 31, 1995, 14 CFR 121.343, 125.225, and 135.152 to require that all airplanes operated under 14 CFR parts 121, 125, or 135 (10 seats or larger), for which an original airworthiness certificate is received after December 31, 1996, record the parameters listed in ''Proposed FDR Enhancements for Newly Manufactured Airplanes'' [see Table 2 below] on a flight data recorder having at least 25-hour recording capacity.

The FAA requests that commenters be specific and provide as much factual detail in comments as possible. Cost information is also particularly requested.

Because of the time frame recommended by the NTSB and the date of the public meeting, the FAA requests that commenters be timely in their response. All comments received will be available, both before and after the closing date for comments, in the Rules Docket.

The FAA anticipates that comments provided in response to this notice will assist the agency in responding to the NTSB recommendations.

Meeting Procedures

The following procedures are established to facilitate the meeting:

(1) There will be no admission fee or other charge to attend or to participate in the meeting. The opportunity to speak will be available to all persons who have requested in advance to present statements or who register on the day of the meeting subject to availability of space in the meeting room.

(2) There will be morning, lunch, and afternoon breaks.

(3) The meeting may adjourn early if scheduled speakers complete their statements in less time than is scheduled for the meeting.

(4) An individual, whether speaking in a personal or a representative capacity on behalf of an organization, may be limited to a 10-minute statement. If possible, we will notify the speaker if additional time is available.

(5) The FAA will try to accommodate all speakers. If the available time does not permit this, speakers generally will be scheduled on a first-come-first-served basis. However, the FAA reserves the right to exclude some speakers if necessary to present a balance of viewpoints and issues.

(6) Sign and oral interpretation may be made available at the meeting, as well as an assistive listening device, if requested at least 10 calendar days before the meeting.

(7) Representatives of the FAA will preside over the meeting. A panel of FAA personnel involved in this issue will be present.

(8) The meeting will be recorded by a court reporter. A transcript of the meeting and any material accepted by the panel during the meeting will be included in the public docket. Any person who is interested in purchasing a copy of the transcript should contact the court reporter directly.

(9) The FAA will review and consider all material presented by participants at the meeting. Position papers or material presenting views or information related to the FDR's may be accepted at the discretion of the presiding officer and subsequently placed in the public docket. The FAA requests that persons participating in the meeting provide 10 copies of all materials to be presented for distribution to the panel members; other copies may be provided to the audience at the discretion of the participant.

(10) Statements made by members of the meeting panel are intended to facilitate discussion of the issues or to clarify issues. Any statement made during the meeting by a member of the panel is not intended to be, and should not be construed as, a position of the FAA.

(11) The meeting is designed to solicit public views and more complete information. Therefore, the meeting will be conducted in an informal and nonadversarial manner. No individual will be subject to cross-examination by any other participant; however, panel members may ask questions to clarify a statement and to ensure a complete and accurate record.

(12) Speakers are encouraged, before the meeting, to review the comments received in the docket, providing them an opportunity to express their view at the meeting on the comments in the docket, as well as present any additional comments.

Table 1.—Proposed Minimum FDR Parameter Requirements for Airplanes in Service (from Attachment A, NTSB Safety Recommendation, February 22, 1995)

Proposed Minimum Parameters:

1. Altitude
2. Airspeed
3. Vertical acceleration
4. Heading
5. Time of each radio transmission to air traffic control
6. Pitch attitude
7. Roll attitude
8. Longitudinal acceleration
9. Pitch trim position*
10. Yaw trim position**
11. Roll trim position**
12. Control column and pitch control surface position**
13. control wheel and lateral control surface position**
14. Rudder pedal and yaw control surface position**
15. Thrust of each engine
16. Position of each thrust reverser (or equivalent for propeller airplane)*
17. Trailing edge flap or cockpit flap control position*
18. Leading edge flap or cockpit flap control position*
19. Ground spoiler position/speed brake selection**
20. angle of attack (when information source is available)**
21. Lateral acceleration**
22. Autopilot engagement status**
23. Automatic Flight Control System (AFCS) modes and engagement status**
24. Outside or total air temperature**

(*) Indicates a new or changed parameter relative to the current 11-parameter requirement. (**) Indicates a new or changed parameter relative to the current 17-parameter requirement.

Table 2.—Proposed FDR Enhancements for Newly Manufactured Airplanes (from Attachment B of the NTSB Safety Recommendation, February 22, 1995).

Acceleration Parameters:
- Vertical
- Lateral
- Longitudinal

Airplane Performance/Position Parameters:
- Altitude
- Airspeed
- Air/ground sensor (primary airplane systems reference, nose or main gear)
- Brake pressure and pedal position
- Drift angle (when an information source is installed)
- Ground speed (when an information source is installed)
- Wind speed and direction (when an information source is installed)
- Outside air temperature or total air temperature
- Radio altitude (when an information source is installed)
- Latitude and longitude (when an information source is installed)

Airplane Attitude Parameters:
- Angle of attack left and right (when an information source is installed)
- Pitch
- Roll
- Magnetic heading
- True heading (when an information source is installed, sampled 1 per 4 seconds)
- Yaw or sideslip angle (when an information source is installed)

Flight Controls Position and Input Parameters:
- All control surface positions—primary controls (pitch, roll, and yaw)
- All cockpit flight control input positions and forces (control wheel, control column, rudder pedal)
  - (sidestick controllers on fly-by-wire systems)
- All trim surface positions—primary controls (pitch, roll, and yaw)
- All cockpit trim control input positions—primary controls (pitch, roll, and yaw)
- Thrust/power—primary flightcrew reference (may require multiple parameters for all phases of flight)
- Throttle/power lever position
- Thrust reverser status (i.e., stow, transit, deployed, reverse pitch)
- Thrust command (when an information source is installed)
- Thrust target (when an information source is installed)
- Engine bleed valve position (when an information source is installed)

Airplane Configuration Parameters:
- Flap position (trailing and leading edge)
- Spoiler position (ground and speed brake)
- Spoiler/speed brake cockpit selection/status (armed—ground spoiler)
- Flap cockpit control selection
- Landing gear position
- Landing gear cockpit control selection
- De-icing or anti-icing system selection (when an information source is installed, sampled 1 per 4 seconds)

Table 2.—**Proposed FDR Enhancements for Newly Manufactured Airplanes (from Attachment B of the NTSB Safety Recommendation, February** 22, 1995**).**—Continued

Fuel quantity in CG trim tank (when an information source is installed)
Computed center of gravity (when an information source is installed)
AC electrical bus status
DC electrical bus status
APU bleed valve position
Hydraulic pressure (all systems)
Navigation Aids:
Localizer deviation
Glideslope deviation
DME 1 and 2 distances
Nav 1 and 2 selected frequency
GPS position data (when an information source is installed)
Marker beacon passage
Autopilot Parameters:
Engagement status (all systems)
AFCS modes and engagement status
Timing:
Radio transmitter keying
UTC (when an information source is installed)

Table 2.—**Proposed FDR Enhancements for Newly Manufactured Airplanes (from Attachment B of the NTSB Safety Recommendation, February** 22, 1995**).**—Continued

Recorder elapsed time (frame counter, 0 to 4095)
CVR/DFDR synchronization reference (when an information source is installed)
Event marker

Warning Parameters:
GPWS
Hydraulic pressure low (each system)
Master warning
Loss of cabin pressure
TCAS—TA, RA, and sensitivity (as selected by crew)
Icing (when an information source is installed)
Engine warnings each engine—
Vibration (when an information source is installed)
Over temp. (when an information source is installed)
Oil pressure low (when an information source is installed)
Over speed (when an information source is installed)
Windshear (when an information source is installed)
Computer failure
Stick shacker/pusher (when an information source is installed)
Manual/Automatic Selected Parameters:
Selected barometric setting
Selected speed
Selected vertical speed
Selected heading
Selected flight path
Selected decision height
EFIS display format
Head-up display (when an information source is installed)
Para-visual display (when an information source is installed)
Multi-function/engine/alerts display format

Issued in Washington, DC on March 8, 1995.

Anthony J. Broderick,

Associate Administrator for Regulation and Certification.

[FR Doc. 95–6274 Filed 3–13–95; 8:45 am]

BILLING CODE 4910–13–M

federal register

Tuesday
March 14, 1995

Part IX

Department of Commerce

Economic Development Administration

Grants and Cooperative Agreements; Availability, Etc.: Economic Development Assistance Programs; Notice

DEPARTMENT OF COMMERCE

Economic Development Administration

[Docket No. 950302065–5065–01]

Economic Development Assistance Programs—Availability of Funds

AGENCY: Economic Development Administration (EDA), Department of Commerce (DoC).

ACTION: Notice.

SUMMARY: The Economic Development Administration (EDA) announces its policies and application procedures for funds available in fiscal year 1995, as described in Public Law 103–317, Departments of Commerce, Justice, State, the Judiciary, and Related Agencies Appropriations, to support projects designed to alleviate conditions of substantial and persistent unemployment and underemployment in economically-distressed areas and regions of the Nation and to address economic dislocations resulting from sudden, severe job losses. The purpose of this announcement is to communicate to potential applicants for EDA funds the policies and procedures that will be used to administer the Agency's programs during fiscal year 1995.

DATES: This announcement is effective for applications considered for fiscal year 1995. Applications are accepted on a continuous basis and will be processed as funds are available. Normally, two months are required for a final decision after the receipt of a completed application that meets all EDA requirements.

ADDRESSES: Interested parties should contact the EDA office in their area (see Section XII).

FOR FURTHER INFORMATION CONTACT: See information at the end of each program section and Section XII for the EDA regional office and Economic Development Representative for the area.

SUPPLEMENTARY INFORMATION:

I. General Policies

EDA encourages certain types of project applications such as those proposals having the greatest potential to benefit areas experiencing or threatened with substantial economic distress. EDA is particularly interested in projects located in authorized and designated enterprise zones. Distress may exist in a variety of forms, including high levels of unemployment, low income levels, large concentrations of low income families, significant decline in per capita employment, substantial loss of population because of the lack of employment opportunities, large numbers (or high rates) of business failures, sudden major layoffs or plant closures, and reduced tax bases.

Potential applicants are responsible for demonstrating to EDA, through the provision of statistics and other appropriate information, the nature and level of the distress their efforts are intended to alleviate. In the absence of evidence of high levels of distress, EDA funding is unlikely. In considering proposals to benefit severely distressed areas, EDA will give consideration to those that address the needs of both rural and urban communities, particularly aid that is directed toward the economic diversification of such areas.

During FY 1995, EDA will place a special emphasis on assisting projects that focus on: (1) Exports; (2) entrepreneurship; (3) telecommunications; and (4) technology initiatives including innovation, staying competitive in high value markets (well paying quality jobs), transfer, and commercialization, to alleviate conditions of substantial and persistent unemployment and underemployment in economically-distressed areas and regions, through the provision of grants for Public Works and Development Facilities, Technical Assistance, Economic Development Planning, Research and Evaluation, and Economic Adjustment Assistance.

EDA recognizes that small communities experience impediments to economic development other than the traditional inadequacies of existing water, sewer and roadway systems; therefore, in fiscal year 1995, EDA will give consideration to projects that will assist an area to overcome a special development or infrastructure problem that is preventing employment growth and economic development from taking place. Such projects may involve, but are not limited to, activities designed to enhance the expansion of the service sector of the economy when that sector is deemed more growth oriented than the traditional industrial sector, or innovative projects designed for the development of publicly-owned telecommunications infrastructure when it can be demonstrated that such a project is needed to foster productivity or enhance economic growth within an EDA-eligible area. Such proposals must be appropriately scaled and provide substantial and direct benefit to the local economy or otherwise enhance the economic prosperity of the area. EDA will consider providing assistance to demonstration type projects that are especially creative from an economic development standpoint and that leverage a substantial amount of nonfederal resources.

Eligible applicants that can demonstrate substantial local support for proposed projects have a better chance to receive EDA assistance. Proposals that do not provide evidence of strong support from the governmental entities in which the proposed project is located are less likely to receive EDA assistance. Support can be demonstrated by the commitment of funds necessary to finance all or part of the nonfederal share.

EDA expects those responsible for developing and managing projects to maximize the impact of the public funds by implementing projects as thoroughly and expeditiously as possible. In the case of projects involving construction, EDA expects construction to be initiated and completed in a timely manner. Applicants are expected to anticipate predictable delays such as those caused by normal weather conditions, permits and approvals, legal complications, community disputes, land acquisition, etc., and account for them in developing project schedules. Projects which by their nature are likely to encounter significant delays are less likely to be considered for funding. Projects that experience unreasonable delays following EDA approval may be terminated and the funds deobligated. These policies are consistent with EDA's objective of supporting activities that can begin to benefit local economies as soon as possible, thereby meeting the pressing development needs identified by project applicants.

Generally, EDA funding will not be used directly or indirectly to assist employers who transfer one or more jobs from one commuting area to another. EDA nonrelocation requirements (13 CFR 309.3) apply to all grants involving construction, rehabilitation or repair of real estate under Titles I, IV, IX, and Section 301(f) of the Public Works and Economic Development Act of 1965 (Pub. L. 89–136, 42 U.S.C. 3121–3246h), as amended and grants under Title IX for any purpose (including Revolving Loan Funds).

No award of Federal funds will be made to an applicant who has an outstanding delinquent Federal debt until either:

1. The delinquent account is paid in full;
2. A negotiated repayment schedule is established and at least one payment is received, or
3. Other arrangements satisfactory to DoC are made.

Applicants may be subject to a pre-award accounting system survey by the Department of Commerce's Office of Inspector General, and fund recipients may be subject to audits or other inspections by the same office.

Applicants eligible for additional grant assistance because of membership in an economic development district must be active participants in the district's economic development planning process.

EDA will evaluate applications for conformance with published statutory, regulatory, and policy requirements. Applications proposed for funding under these programs are subject to the requirements of Executive Order 12372, ''Intergovernmental Review of Federal Programs.''

EDA will not approve projects that involve actual or potential conflict-of-interest situations. If EDA identifies or suspects a possible conflict-of-interest situation, or an appearance of such, application processing and/or the grant award may be suspended and the burden will be on the applicant/grantee to take appropriate steps to eliminate the perception or actual conflict of interest before the application processing or award is resumed.

Recipients must agree that no funds made available by EDA will be used, directly or indirectly, for paying attorneys' or consultants' fees in connection with securing awards made by the Government, such as preparation of the application. However, attorneys' and consultants' fees incurred for meeting award requirements, such as conducting a title search or preparing plans and specifications, may be eligible project costs and may be paid out of funds made available by EDA, if such costs are otherwise eligible.

The total dollar amount of the indirect costs proposed in an application under any EDA programs must not exceed the indirect cost rate negotiated and approved by a cognizant Federal agency prior to the proposed effective date of the award or 100 percent of the total proposed direct costs dollar amount in the application, whichever is less.

Primary Applicant Certification—All primary applicants must submit a completed Form CD–511, ''Certifications Regarding Debarment, Suspension and Other Responsibility Matters; Drug-Free Workplace Requirements and Lobbying,'' and the following explanations are hereby provided:

a. Nonprocurement Debarment and Suspension—Prospective participants (as defined at 15 CFR Part 26, Section 105) are subject to 15 CFR Part 26, ''Nonprocurement Debarment and Suspension'' and the related section of the certification form prescribed above applies;

b. Drug-Free Workplace—Grantees (as defined at 15 CFR Part 26, Section 605) are subject to 15 CFR Part 26, Subpart F, ''Governmentwide Requirements for Drug-Free Workplace (Grants)'' and the related section of the certification form prescribed above applies;

c. Anti-Lobbying—Persons (as defined at 15 CFR Part 28, Section 105) are subject to the lobbying provisions of 31 U.S.C. 1352, ''Limitation on use of appropriated funds to influence certain Federal contracting and financial transactions,'' and the lobbying section of the certification form which applies to applications/bids for grants, cooperative agreements, and contracts for more than $100,000, and loans and loan guarantees for more than $150,000, or the single family maximum mortgage limit for affected programs, whichever is greater; and

d. Anti-Lobbying Disclosures—Any applicant that has paid or will pay for lobbying using any funds must submit an SF–LLL, ''Disclosure of Lobbying Activities,'' as required under 15 CFR Part 28, Appendix B.

Recipients shall require applicants/bidders for subgrants, contracts, subcontracts, or other lower tier covered transactions at any tier under the award to submit, if applicable, a completed Form CD–512, ''Certifications Regarding Debarment, Suspension, Ineligibility and Voluntary Exclusion-Lower Tier Covered Transactions and Lobbying'' and disclosure form, SF–LLL, ''Disclosure of Lobbying Activities.'' Form CD–512 is intended for the use of recipients and should not be transmitted to the Department. SF–LLL submitted by any tier recipient or subrecipient should be submitted to DoC in accordance with the instructions contained in the award document.

Buy American-Made Equipment or Products—Applicants are hereby notified that they will be encouraged, to the greatest extent practicable to purchase American-made equipment and products with funding provided under these programs in accordance with Congressional intent as set forth in the resolution contained in Public Law 103–317, Sections 607 (a) and (b).

The implementing regulations of the National Environmental Policy Act (NEPA) require EDA to provide public notice of the availability of project specific environmental documents such as environmental impact statements, environmental assessments, findings of no significant impact, records of decision etc., to the affected public as specified in 40 CFR 1506.6(b).

Depending on the project location, environmental information concerning specific projects can be obtained from the Regional Environmental Officer (REO) in the appropriate EDA regional office listed in Section XII or from Dr. Frank Monteferrante, Environmental Branch, Compliance Review Division, EDA, U.S. Department of Commerce, Washington, DC 20230, (202) 482–4208.

Applicants should be aware that a false statement on the application is grounds for denial of the application or termination of the grant award and grounds for possible punishment by a fine or imprisonment as provided in 18 U.S.C. 1001 and 42 U.S.C. 3220.

All nonprofit and for-profit applicants are subject to a name check review process. Name checks are intended to reveal if any key individuals associated with the applicant have been convicted of, or are presently facing, criminal charges such as fraud, theft, perjury, or other matters which significantly reflect on the applicant's management, honesty or financial integrity.

Application Procedures

Applications are accepted on a continuous basis. Processing time for applications will depend upon the completeness of the information and supporting documents provided in the application at the time of submission. Applications that require additional information from applicants or other sources will not be processed further pending correction of deficiencies, and the official application receipt dates will be adjusted accordingly. Normally, two months are required for a final decision after the receipt of a completed application that meets all EDA requirements. Please see the specific program sections of this Notice for appropriate preapplication and application procedures. Proponents should contact the appropriate EDR (see Section XII) to obtain the necessary application forms.

An invitation to submit an application does not assure EDA funding. Factors that will be considered in selecting proposals include if and to what extent the project meets the evaluation criteria and ''General Policies'' described above.

Project applications invited but not funded or denied in any fiscal year remain eligible for funding consideration in the next fiscal year. Applications invited and received prior to the date of this Notice will be processed and evaluated in accordance with the project evaluation and selection criteria published for FY 1994 and current legal requirements. Those applications invited on or after the date of this Notice must be consistent with

this Notice. Applicants whose projects were invited but not submitted to EDA in FY 1994 should contact the appropriate EDA regional office regarding the forms to be used for FY 1995.

Selection Procedures

Generally, preapplications are reviewed by the Economic Development Representative, the Project Review Committee and then the Regional Director. Based on the evaluation criteria, general policies and availability of funds, final funding decisions on all applications under Titles I and IX and Title III, Local Technical Assistance and Planning, are made by the Regional Directors subject to such conditions as the Assistant Secretary for Economic Development may prescribe. All other funding decisions are made by the Assistant Secretary for Economic Development.

Recipients and subrecipients are subject to all Federal laws and Federal and DoC policies, regulations, and procedures applicable to Federal financial assistance awards.

Unsatisfactory performance under prior Federal awards may result in an application not being considered for funding.

If an application is selected for funding, EDA has no obligation to provide any additional future funding in connection with an award. Renewal of an award to increase funding or extend the period of performance is at the total discretion of EDA.

Applicants should be aware that if they incur any costs prior to an award being made they do so solely at their own risk of not being reimbursed by the Government. Notwithstanding any verbal or written assurance that may have been received, there is no obligation on the part of EDA to cover pre-award costs.

The following material describes other requirements, policies and procedures associated with each of EDA's programs.

II. Program: Public Works and Development Facilities Assistance

(Catalog of Federal Domestic Assistance: 11.300 Economic Development Grants and Loans for Public Works and Development Facilities. 11.304 Economic Development Public Works Impact Program (PWIP)) 13 CFR Part 305

Authority

Funds available under the Public Works and Development Facilities Program are used to finance projects that contribute to the economic development of distressed areas. This program is authorized by Titles I and IV of the Public Works and Economic Development Act of 1965, as amended (PWEDA), 42 U.S.C. 3131 and 42 U.S.C. 3171(a)(3).

Eligibility

Eligible applicants under this program include any state, or political subdivision thereof, Indian tribe, the Federated States of Micronesia, the Republic of the Marshall Islands, the Commonwealth of Puerto Rico, the Virgin Islands, Guam, American Samoa and the Commonwealth of the Northern Mariana Islands, or private or public nonprofit organization or association representing any redevelopment area or part thereof, provided such project is located within an eligible EDA area that is represented by the nonprofit organization or association.

Eligible areas, other than those designated under the Public Works Impact Program, must have a current EDA-approved Overall Economic Development Program (OEDP). Political entities claiming eligibility under OEDPs developed by multicounty economic development organizations are expected to continue to participate actively in the organization. Further information on eligibility is available from EDA's regional offices. Nonprofit applicants are urged to seek the cooperation and support of units of local government and, when deemed appropriate by EDA, to have the local government serve as co-applicant for EDA assistance. This ensures the financial stability and continuity of the project, in the event that the nonprofit entity finds itself in a position of not having the financial resources to properly and efficiently administer, operate, and maintain the EDA-assisted facility consistent with the provisions of 13 CFR 314–Property Management Standards.

Program Objective

The purpose of the Public Works Program is to assist communities with the funding of public works and development facilities that contribute to the creation or retention of private sector jobs and to the alleviation of unemployment and underemployment. Such assistance is designed to help communities achieve lasting improvement by stabilizing and diversifying local economies, and improving local living conditions and the economic development of the area. The alleviation of unemployment and underemployment among residents of the project area is a primary focus of this program.

Funding Availability

Funds in the amount of $195 million are available for this program. Grants awarded under this program generally range between $100,000 and $1.5 million.

Funding Instrument

EDA may provide direct grants not to exceed 50 percent of the estimated cost of the project. However, under certain circumstances supplementary grants to augment the direct grant may be provided up to a maximum of 80 percent of the eligible project costs. Supplementary grant assistance to finance over 50 percent of the project costs will be approved by EDA only for proposals in areas of high distress. Decisions on such supplementary grant assistance will be based on the nature of the project, the amount of fair user charges or other revenues the project may reasonably be expected to generate, and the relative needs of the area (see 13 CFR 305.5). But in no event will the Federal participation exceed 80 percent of the aggregate cost of any such project, except as authorized by section 101(c) of PWEDA of 1965, as amended, which permits EDA to waive the nonfederal share under certain conditions. Applicants are required to provide the local share from acceptable sources including, but not limited to cash, local government general obligation or revenue bonds, Community Development Block Grant (CDBG) entitlement funds or balance of state awards, Farmers Home Administration loans, and other public and private financing, including donations.

The local share need not be in hand at the time of application, however, the applicant must assure EDA that the funds will be available to provide the nonfederal share of the project. The local share must not be encumbered in any way that would preclude its use consistent with the requirements of the grant.

Project Duration

Projects are expected to be completed in a timely manner consistent with the nature of the project. Normally, the maximum period for any financial assistance that is provided shall be not more than five (5) years from date of award.

Evaluation Criteria

For both regular public works projects and Public Works Impact Program (PWIP) projects, priority consideration will be given to those which are the most competitive based upon the project evaluation criteria set forth below, that best meet the needs of eligible areas,

and that are located in areas of substantial economic distress. Evaluation criteria will not be assigned weights. Projects will be evaluated on the basis of the elements listed below to meet the goals described above.

A. Public Works Projects

Factors that will be taken into account in considering projects eligible under section 101(a)(1)(A)—(C) of PWEDA, 42 U.S.C. 3131(a)(1)(A)—(C), include if and to what extent the project:

1. Improves opportunities for the successful establishment or expansion of industrial or commercial facilities in the area where such project will be located.

2. Is consistent with the EDA approved Overall Economic Development Program (OEDP) for the area in which it is, or will be, located, and has broad community support.

3. Assists in creating or retaining private sector jobs in the near term and assists in the creation of additional long-term employment opportunities, provided the jobs are not transferred from any other area of the United States, and will result in a low cost-per-job in relation to total EDA cost.

4. Benefits the long-term unemployed and members of low-income families who are residents of the area to be served by the project.

5. Fulfills a pressing need of the area, or part thereof, in which it will be located.

6. Is supported by significant private sector investment.

7. Has evidence of adequate local share of funds.

8. Supports developments taking place in designated empowerment zones/enterprise communities.

9. Demonstrates that necessary permits, land acquisitions, or options on land and rights-of-way have been or will be obtained and that all other legal requirements of the application process have been satisfied.

10. Maximizes the amount of local, state or other Federal funding that is available.

11. Gives evidence of the ability to begin and complete construction in a timely manner in accordance with a schedule to be agreed upon by EDA and the applicant and included in the grant award. EDA discourages the start of construction prior to grant award and cautions that financial hardship may be experienced by applicants whose projects are not approved. EDA will require all applicants that request approval to proceed with construction prior to grant award to acknowledge that they are proceeding at their own risk and without recourse to EDA if the grant is not awarded or EDA requirements are not met. EDA also requires that compliance with environmental regulations be completed before construction begins. EDA's regional office must have time to complete its ''Finding of No Significant Impact,'' and clearances must be obtained from appropriate state and Federal agencies. Furthermore, EDA may view the start of construction prior to grant award as an indication that the grant funds are not essential for the successful implementation of the project.

12. If located in an Economic Development Center (i.e., Growth Center) that has a stable economy with little distress, includes an employment plan that explains how new employment opportunities for residents of nearby highly distressed redevelopment areas will be provided.

B. Public Works Impact Program

Factors that will be considered in the evaluation of projects under the Public Works Impact Program (PWIP) authorized by section 101(a)(1)(D) of PWEDA, 42 U.S.C. 3131(a)(1)(D), include if and to what extent the project:

1. Directly assists in creating immediate useful work (i.e., construction jobs) for the unemployed and underemployed residents in the project area;

2. Improves the economic or community environment in areas of severe economic distress;

3. Includes a specific plan (i.e., PWIP Employment Strategy) for hiring the unemployed and underemployed persons from the project area to work on the construction of the project; EDA will evaluate all plans to ensure that they contain a logical explanation of how the employment objectives will be met;

4. Assists in providing long-term employment opportunities or other economic benefits for the unemployed and underemployed in the project area;

5. Primarily benefits low-income families by providing essential community services, or satisfying a pressing public need;

6. In addition to the requirement for regular public works projects, as contained in paragraph A 11., can begin construction quickly (normally within 120 days after acceptance of the grant by the applicant);

7. Has significant labor intensity, where labor intensity is the proportion of labor costs to the total project costs.

C. Industrial Park Projects

Projects that will primarily serve an industrial park or site may be evaluated on such additional factors as:

1. A detailed analysis of existing industrial park capacity and utilization; occupancy rates for existing developed industrial parks currently available within a 25-mile radius of the project site. For cities with populations over 50,000, the prescribed area may be determined by an analysis of industrial sites within an established industrial area, which may be less than a 25-mile radius. Contact the economic development representative (EDR) for the area or the appropriate EDA regional office for guidance.

2. Commitments in writing from identified tenants to expand existing operations or to locate in the industrial park or site. Commitments should include a description of the industry, the number of jobs created or saved, an implementation schedule, and the relationship of the commitment to the requested grant assistance.

3. The existence of a documented marketing strategy and demonstrated financial ability to market space in the industrial park or site. Strong emphasis will be placed upon this evaluation criterion.

Construction Project Implementation

As indicated in the first section of this Notice, EDA expects construction projects to be initiated and completed in a timely manner and in accordance with the schedule agreed upon in the grant documentation.

Under most circumstances, EDA will not provide additional funds to finance cost overruns that occur during project implementation.

Proposal Submission Procedures

To establish the merits of project proposals, interested parties should first contact the economic development representative (EDR) for the area (see listing in Section XII). The economic development representative for the area will provide a preapplication form (ED–101P, OMB Control No. 0610–0011) and arrange for conferences to discuss the proposal. EDA will evaluate proposals before inviting the submission of an application. As previously mentioned, an invitation to submit an application does not assure EDA funding. Proposals will be evaluated based upon:

1. Conformance with the evaluation criteria mentioned above;

2. Merits of the proposal in addressing the economic development needs of the eligible area; and

3. The availability of program funds.

Processing time for project proposals depends upon the completeness of information and supporting documents provided in the preapplication form at the time of submission. Project

proposals that require additional information from applicants or other sources will not be processed further until deficiencies are corrected.

Application Procedures

Following a review of project proposals, EDA will invite entities whose projects are selected for consideration to submit applications within 30 days after receipt of an invitation letter. The application will include a form ED–101A, as approved by the Office of Management and Budget Control No. 0610–0011. The demand for public works assistance is expected to exceed available funding. The processing of applications that cannot be recommended for approval within 60 days of receipt in a regional office because of unresolved issues will be suspended. Such applications may be reconsidered at a future date, but must compete with other applications for the funds available at that time.

Further Information

For further information contact the appropriate EDA regional office or economic development representative for your area (see Section XII of this Notice).

III. Program: Local Technical Assistance

(Catalog of Federal Domestic Assistance: 11.303 Economic Development-Technical Assistance) 13 CFR Part 307, Subpart A

Authority

Funds under the Local Technical Assistance Program are awarded to eligible applicants to provide assistance intended to assure the successful initiation and implementation of area, state, and regional development efforts designed to alleviate economic distress. This program is authorized under Section 301(a) of the Public Works and Economic Development Act of 1965, as amended, 42 U.S.C. 3151(a).

Eligibility

Eligible applicants for Local Technical Assistance grants or cooperative agreements include public or private nonprofit national, state, area, district, or local organizations; public and private colleges and universities; Indian tribes, local governments, and state agencies. In certain circumstances, applications may be considered from other applicants such as private individuals, partnerships, firms, and corporations.

Program Objective

The Local Technical Assistance Program is designed to help alleviate or prevent conditions of excessive unemployment or underemployment and problems of economically distressed populations in rural and urban areas.

Funding Availability

Funds in the amount of $1.5 million are available for the Local Technical Assistance Program. It is expected that these funds will be made available for projects serving specific local or substate areas and also for projects whose impacts will affect multistate areas within EDA regional office boundaries. Individual award amounts have averaged $25,000 in recent years.

Funding Instrument

EDA will provide grants and cooperative agreements not to exceed 75 percent of the proposed project costs. Applicants are expected to provide the remaining share, preferably in cash. The Assistant Secretary may waive all or part of the 25 percent share of technical assistance grants, if he/she determines that the nonfederal share is not reasonably available because of the critical nature of the situation requiring technical assistance or for other good cause.

Project Duration

Assistance will be for the period of time required to complete the scope of the work. This typically does not exceed twelve months.

Evaluation Criteria

Evaluation criteria will not be assigned weights. Projects will be evaluated on the basis of the elements listed below in order to meet the goals described above. Evaluation criteria include whether the local Technical Assistance proposal:

1. Produces strong evidence that the proposed project will lead to the near-term (between one and five years) generation or retention of private sector jobs.

2. Does not depend upon further EDA or other Federal funding assistance to achieve results.

3. Strengthens the capability of state and local organizations and institutions, including nonprofit development groups, to undertake and promote effective economic development programs targeted to people and areas of distress.

4. Stimulates significant private and nonfederal public investment for economic development purposes, including funds from commercial lenders, public and private pension funds and other nontraditional sources.

5. Benefits severely distressed areas, both rural and urban counties and communities.

6. Diversifies distressed rural and urban economies by means of empowerment zones, enterprise communities and other strategies.

7. Demonstrates innovative approaches to stimulating economic development in depressed areas. EDA is particularly interested in receiving innovative proposals in the following areas:

a. Export development used as an economic development strategy;

b. Assistance to business in uses of technology; and

c. Sustainable development.

8. Is consistent with the EDA approved Overall Economic Development Program (OEDP) for the area in which the project is located and has been recommended by the OEDP Committee (if appropriate to the nature of the project).

9. Presents an appropriate and clear project design.

10. Is proposed by organization or individual(s) with the capacity, qualifications and staff necessary to undertake the intended activities.

11. Presents a reasonable, itemized budget for the proposed activities.

12. Involves a significant (preferably cash) contribution in excess of minimum required from applicant or other nonfederal sources.

Pre-Application Procedures

Parties seeking support for Local Technical Assistance projects should contact the economic development representative (EDR) for the area to discuss their proposal. (See EDR listing in Section XII of this announcement.)

EDA will evaluate all proposals as they are received and invite applications for those which best satisfy the evaluation criteria. An invitation does not, however, assure EDA funding.

Potential applicants should submit one original and two copies of a brief and concise proposal, not to exceed 20 pages. Vita and capability information may be appended.

Proposal Submission Procedures

Potential applicants must submit to the appropriate EDR proposals that include:

1. A cover page giving a short descriptive project title, the name and address of the applicant organization, the name and telephone number of the project director, the project duration, total project cost, the amount of EDA funds requested, and the program (Local Technical Assistance) from which EDA funds are being requested;

2. A brief section indicating why the project is needed, giving its objectives, and providing a capsule description of the project;

3. A more detailed description of the project and its methodology;

4. A work plan showing different phases of the project and their timing;

5. A detailed budget, not to exceed one page, showing cost breakdowns, with EDA-funded and non-EDA-funded costs presented in separate columns and with the EDA-funded costs adding to the total shown on the cover page;

6. Resumes for the project director and principal staff; and

7. A corporate or institutional capability statement, where appropriate.

Parties seeking support for projects where impacts will cross EDA regional boundaries should submit proposals to the Director, Technical Assistance and Research Division, Economic Development Administration, Room 7315, U.S. Department of Commerce, Washington, DC 20230. Individuals or organizations located outside the Washington, DC, metropolitan area should submit a copy of the letter transmitting their proposal to Washington, and to the EDR for the area in which they are located.

Application Procedures

The appropriate EDA regional office will invite entities whose proposals for Local Technical Assistance projects are selected for further consideration to submit application packages. The application will include a Standard Form-424 (OMB Control No. 0348–0043).

Eligibility for Specific Solicitations

EDA may, during the course of the year, identify specific economic development technical assistance activities it wishes to have conducted. Organizations and individuals interested in being invited to respond to Solicitations of Applications (SOAs) to conduct such work should submit information on their capabilities and experience to the Director, Technical Assistance and Research Division, Economic Development Administration, Room 7315, U.S. Department of Commerce, Washington, DC 20230.

Further Information

For further information about Local Technical Assistance projects contact the appropriate EDR. (See EDR listing in Section XII of this announcement.) For further information about submitting projects whose impact will cross EDA regional office boundaries, contact the National Technical Assistance Coordinator, telephone (202) 482–2127.

IV. Program: National Technical Assistance

(Catalog of Federal Domestic Assistance: 11.303 Economic Development-Technical Assistance) 13 CFR Part 307, Subpart A

Authority

Funds under the National Technical Assistance Program are awarded to eligible applicants who will offer assistance to local, regional and state organizations, and/or conduct demonstrations of and disseminate information about innovative development techniques designed to alleviate economic distress. This program is authorized under Section 301(a) of the Public Works and Economic Development Act of 1965, as amended, 42 U.S.C. 3151(a).

Eligibility

Eligible applicants for National Technical Assistance grants or cooperative agreements include public or private nonprofit national, state, area, district, or local organizations; public and private colleges and universities; Indian tribes, local governments, and state agencies. In certain circumstances, applications may be considered from other eligible applicants such as private individuals, partnerships, firms, and corporations.

Program Objective

The National Technical Assistance Program is designed to help alleviate or prevent conditions of excessive unemployment or underemployment and to address problems of economically distressed populations.

Funding Availability

Funds in the amount of $1.85 million are available for the National Technical Assistance Program. Individual award amounts may vary and generally will not exceed $200,000.

Funding Instrument

EDA will provide grants not to exceed 75 percent of proposed project costs. Applicants are expected to provide the remaining share. In cases where EDA issues a Solicitation of Applications, an applicant's share may not be required. The Assistant Secretary may waive all or part of the 25 percent nonfederal share of technical assistance grants, if he/she determines that the nonfederal share is not reasonably available because of the critical nature of the situation requiring technical assistance or for other good cause.

Project Duration

Assistance will be for the period of time required to complete the scope of the work. Generally, this will not exceed fifteen months.

Evaluation Criteria

Evaluation criteria will not be assigned weights. Projects will be evaluated on the basis of the elements listed below in order to meet the goals described above. EDA will consider proposals for National Technical Assistance that include whether the proposal:

1. Effectively supports, through providing information and other means, the capability of state and local organizations and institutions, including nonprofit development groups, to undertake and promote effective economic development programs targeted to people and areas in distress.

2. Demonstrates innovative approaches to stimulating economic development in one or more of the following:

a. Assistance to business in implementing technology initiatives including innovations, transfer, and commercialization including high value manufacturing through collaboration;

b. Export assistance;

c. Entrepreneurship assistance;

d. Sustainable development and growth management;

e. Empowerment zones/enterprise communities;

f. Defense conversion and industrial restructuring;

g. Assistance to colleges and universities, including community colleges in implementing technology and/or developing curricula for economic development; and

h. Other relevant economic development issues.

3. Presents an appropriate and clear project design.

4. Is proposed by organizations with the capacity, qualifications, and staff necessary to undertake the intended activities.

5. Presents a reasonable, itemized budget for the proposed activities.

Pre-Application Procedure

Potential applicants should submit one original and two copies of a brief and concise proposal, not to exceed 20 pages. Vita and capability information may be appended.

Proposals should include:

1. A cover page giving a short descriptive project title, the name and address of the performing organization, the name and telephone number of the project director, the project duration, the project costs, the amount of EDA funds requested, and the program (National Technical Assistance) from which EDA funds are being requested;

2. A brief scope-and-objectives section indicating why the project is needed, giving its objectives, and providing a capsule description of the project;

3. A more detailed description of the project and its methodology;

4. A work plan showing different phases of the project and their timing;

5. A detailed budget, not to exceed one page, showing cost breakdowns, with EDA-funded and non-EDA-funded costs presented in separate columns and with the EDA-funded costs adding to the total shown on the cover page;

6. Resumes for the project director and principal staff; and

7. A corporate or institutional capability statement, where appropriate.

Proposals should be submitted to the Director, Technical Assistance and Research Division, Economic Development Administration, Room 7315, U.S. Department of Commerce, Washington, DC 20230.

Application Procedures

The Technical Assistance and Research Division will invite entities whose proposals for National Technical Assistance projects are selected for further consideration to submit application packages. Such invitation, however, does not assure EDA funding. The application will include a Standard Form-424 (OMB Control No. 0348–0043).

Eligibility for Specific Solicitations

EDA may, during the course of the year, identify additional specific economic development technical assistance activities. Organizations and individuals interested in being invited to respond to Solicitations of Applications (SOAs) to conduct such work should submit information on their capabilities and experience to the Director, Technical Assistance and Research Division, Economic Development Administration, Room 7315, U.S. Department of Commerce, Washington, DC 20230.

Further Information

For further information about National Technical Assistance projects contact the Technical Assistance and Research Division, telephone (202) 482–2127.

V. Program: University Center Technical Assistance Projects

(Catalog of Federal Domestic Assistance: 11.303 Economic Development-Technical Assistance) 13 CFR Part 307, Subpart A

Authority

Funds for the basic University Center projects are used as seed money to help selected colleges and universities mobilize their own and other resources to assist in the economic development of distressed areas. The efforts of university centers should focus on helping public bodies, nonprofit organizations and businesses plan and implement activities designed to generate jobs and income. In addition, funds may be used for projects which promote the goals of the University Center program in other ways that demonstrate innovative economic development. Support for these types of projects is authorized under Section 301(a) of the Public Works and Economic Development Act of 1965, as amended, 42 U.S.C. 3151(a).

Eligibility

Eligible applicants for University Center grants are public and private colleges and universities, associations representing such institutions, and other organizations with expertise in University Center program issues.

Program Description

This program helps educational institutions establish and maintain outreach programs which permit them to be active and on-going participants in economic development. The objective of the program is to use the resources of the educational institutions to provide technical assistance to alleviate or prevent conditions of excessive unemployment or underemployment and problems of distressed populations in individual states or substate areas. The technical assistance provided under this program must be directed to clients outside the institution of higher education.

Funding Availability

The FY 1995 budget for this program is $7.57 million. While the expected funding range for each award is $75,000 to $150,000, circumstances may warrant funding projects at higher or lower levels. In FY 1994, EDA provided funding to 66 colleges and universities under this program. Since most of them are expected to seek continuation funding, it is unlikely that any new University Centers will be funded in FY 1995.

Matching Requirements

A minimum match, equal to 25 percent of the total project cost, is required.

Type of Funding Instrument

This program uses grants as its funding instrument.

Award Period

The project period for grants awarded under this program generally will not exceed twelve months.

Indirect Costs

EDA encourages applicants to waive indirect costs for this program. No more than 20 percent of the Federal grant and the minimum nonfederal share may be allocated for indirect costs.

Application Procedures

The appropriate EDA regional office will invite entities whose proposals for University Center Technical Assistance projects are selected for further consideration to submit application packages. The application will include a Standard Form 424 (OMB Control No. 0348–0043).

Project Funding Priorities

Innovative proposals with a variety of economic development foci are welcome. However, applicants should note that EDA will not award University Center Technical Assistance program funds to provide general business assistance (e.g., preparing business plans) in areas served by Small Business Development Centers (SBDCs), Minority Business Development Centers (MBDCs), or Trade Adjustment Assistance Centers (TAACs). Most successful proposals funded in the recent past have emphasized providing technical assistance to public sector and nonprofit organizations related to economic development planning and projects, or helping private sector firms use technology to solve manufacturing or processing problems.

Evaluation Criteria

For existing University Centers, EDA will primarily consider past performance in determining whether to continue the award and the amount of funding to be offered. In evaluating a proposal for new University Center funding, EDA will consider the elements listed below. Evaluation criteria are not assigned weights, as all factors are equally important and contribute to the overall goals described above.

1. Addresses the economic development needs of the service area;

2. Complements the activities of other organizations in the proposed service area that are engaged in economic development;

3. Has the commitment of the highest management levels of the sponsoring institution;

4. Provides evidence of adequate nonfederal financial support, either

from the sponsoring institution or other sources;

5. Outlines activities consistent with the expertise of the proposed University Center staff and the academic programs and other available resources within the sponsoring institution;

6. Complements and supports the local, regional or state economic development strategies in the service area;

7. Presents a reasonable budget, including both the Federal and nonfederal shares;

8. Documents past experience of the sponsoring institution in operating technical assistance programs; and

9. Adds to the geographic distribution of University Centers across the country.

All proposals must include a work program organized under the following categories: (1) providing technical assistance; (2) conducting applied research; and (3) disseminating results of the University Center activities. For this program, technical assistance is defined as an activity carried out by the University Center in response to a direct request from a client outside the sponsoring educational institution. Applied research is defined as an economic development activity undertaken by the University Center at its own initiative.

All proposals must include quantitative and qualitative evaluation criteria for each activity listed under the three categories of the work program. These criteria, when accepted by EDA, will be the primary guide used in evaluating the performance of the University Center.

All proposals must include a program budget that, at a minimum, indicates the Federal and nonfederal funds allocated to each of the three work program categories. At least 70 percent of the direct costs of the project budget must be allocated to the first category of the work program, providing technical assistance to clients outside the sponsoring institutions.

Selection Procedures

The EDA regional offices review the proposals and make recommendations for funding of new grants to the Assistant Secretary for Economic Development, who makes the final decisions based on the relative merits of the applications.

Proposal Submission Procedures for Continuation Grants

Each existing University Center will be notified by the appropriate regional office of its eligibility for continuation funding. At that time, University Centers eligible for continuation funding will be notified of the amount of the required nonfederal share and provided with additional program guidance.

Proposal Submission Procedures for New Basic Grants

Institutions seeking funding for a University Center should submit a proposal describing the activities to be carried out with the grant funds, to the appropriate EDA regional office, or to the EDR for the area. (See EDA regional office and EDR listing in Section XII of the announcement.)

Further Information

For further information about the University Center Technical Assistance program contact the appropriate regional office or EDR (Section XII) or the University Center Coordinator, Technical Assistance and Research Division, Economic Development Administration, Room H7315, U.S. Department of Commerce, Washington, D.C. 20230, telephone (202) 482–2127.

VI. Program: Planning Assistance for Economic Development Districts, Indian Tribes, and Redevelopment Areas

(Catalog of Federal Domestic Assistance: 11.302 Economic Development—Support for Planning Organizations) 13 CFR Part 307, Subpart D

Authority

Funds under this program are awarded to defray administrative expenses in support of the economic development planning efforts of economic development districts (Districts), redevelopment areas (Areas) and Indian tribes. This program is authorized under Section 301(b) of the Public Works and Economic Development Act of 1965, as amended, 42 U.S.C. 3151(b).

Eligibility

Eligible applicants are economic development districts, redevelopment areas, organizations representing redevelopment areas (or parts of such areas), Indian tribes, organizations representing multiple Indian tribes, the Federated States of Micronesia, the Republic of the Marshall Islands, the Commonwealth of Puerto Rico, the U.S. Virgin Islands, Guam, American Samoa, and the Commonwealth of the Northern Mariana Islands.

Program Objective

The primary objective of planning assistance for administrative expenses under section 301(b) is to support the formulation and implementation of economic development programs designed to create or retain full-time permanent jobs and income, particularly for the unemployed and underemployed in the most distressed areas served by the applicant. Planning activities supported by these program funds must be part of a continuous process involving significant leadership by public officials and private citizens.

Funding Availability

Funds in the amount of $21.484 million are available in two categories: Districts/Areas (Category A)—$18.583 million; and Indian tribes (Category B)—$2.901 million. Individual awards may vary but generally will not exceed $57,000.

Funding Instrument

Grant assistance can be provided for up to 75 percent of project costs for Category A grants with the applicant required to provide the remaining share from local (non-federal) sources. Category B grant assistance may be provided for up to 100 percent of project costs.

Project Duration

Assistance will normally be for a period of twelve months.

Evaluation Criteria

Evaluation criteria will not be assigned weights. EDA will consider the elements listed below in order to evaluate funding requests.

1. The responsiveness of the proposed work program to the program regulations contained in 13 CFR 307.22;

2. Past performance of any currently funded grantee (including information provided in scheduled progress reports);

3. The economic distress of the area served by the applicant;

4. Management and staff capacity and qualifications in economic program/policy development and operations;

5. The local leaders' involvement in the applicant's economic development activities; and

6. Priority consideration will be given to currently funded grantees.

Proposal Submission Procedures

Application procedures may be obtained from EDA's regional offices for the following:

a. Currently funded planning grantees; and

b. Proposals from applicants not currently funded under Categories A or B, that would fit into either of those categories.

Eligible applicants under both Categories A and B should submit proposals which include:

1. A letter signed by the chief elected official (Chairman of the Board, Tribal

Chairman) or another legally authorized official of the applicant stating the organization's desire to receive funds to carry out the types of planning and administrative activities eligible under the 301(b) program.

2. Significant, verifiable information on the level of economic distress in the area, including unemployment and income data. Any major changes in distress levels during the past year should be described.

3. A work program outlining the specific development activities that will be carried out under the grant and explaining how they relate to the problems identified in the area OEDP, annual report, or other documents.

New applicants should submit one copy of the proposal to the appropriate economic development representative, and an original and one copy to the appropriate EDA regional office. Addresses of the EDA regional offices and listing of the economic development representatives are found in Section XII of this Notice.

Formal Application Procedures

EDA regional offices will contact currently funded grantees to inform them of the procedures for submitting applications for continuation funding.

Following review of the proposals submitted, EDA will invite those selected for funding consideration to submit formal applications. Funding levels will be determined by the economic distress and need of the area served by the applicants, past performance of previously funded grantees, and availability of program funds. The application will include an SF–424 (approved by the Office of Management and Budget Control No. 0348–0043), proposed budget, scope of work and staffing plan.

Further Information

For further information contact the appropriate economic development representative, EDA regional office (see Section XII of this Notice), or the Director, Planning Division, Economic Development Administration, Room 7319, U.S. Department of Commerce, Washington, DC 20230; telephone (202) 482–3027.

VII. Program: Planning Assistance for States and Urban Areas

(Catalog of Federal Domestic Assistance: 11.305 Economic Development—State and Urban Area Economic Development Planning) 13 CFR Part 307, Subpart D

Authority

Funds under the State and Urban Planning Program are awarded to defray administrative expenses in support of economic development planning efforts of eligible applicants. This program is authorized under Section 302(a) of the Public Works and Economic Development Act of 1965, as amended, 42 U.S.C. 3151a.

Eligibility

Eligible applicants under this program are the governors of states, the chief executive officers of cities and counties, and substate planning and development organizations (including redevelopment areas and economic development districts).

Program Objective

The primary objective of planning assistance under section 302(a) is to strengthen significant economic development planning capability and initiatives of eligible applicants to ensure a more productive use of available resources in reducing the effects of economic problems, particularly in those areas experiencing severe economic distress.

Assistance must be part of a continuous process involving significant local leadership from public officials and private citizens and should include efforts to reduce unemployment and increase incomes. These efforts should be systematic and coordinated, when applicable, with other planning organizations in the area, and should strengthen the planning capabilities of applicants.

Activities eligible for support include economic analysis, definition of development goals, determination of project opportunities, development of economic development policies, processes and procedures, and formulation and implementation of an economic development program.

Planning program funds will not be used to provide support to activities that more appropriately meet the criteria for funding under the EDA Technical Assistance programs.

EDA is interested in proposals for planning activities designed to address problems of economically-distressed segments of the population. Funding priority will be given to proposals promoting exports; entrepreneurship; and technology initiatives including innovation, transfer, commercialization, high value manufacturing through collaboration, or that reduce barriers to the development of new businesses. In the case of proposals from states, EDA is particularly interested in innovative approaches to planning and implementing economic development initiatives such as tourism development, manufacturing technology, and sustainable growth, as well as efforts that lend themselves to replication in other areas.

Funding Availability

Funds in the amount of $4.87 million are available for providing grant assistance under this program. Individual grants under this program generally will range between $50,000 to $200,000.

Funding Instrument

Grant assistance may be provided for up to 75 percent of project costs. Applicants will be required to provide the remaining share, preferably in cash. Applications for grants exceeding $200,000 may be given low funding priority. EDA may consider proposals for smaller grants to support the aforementioned appropriate activities.

Project Duration

Assistance will be for the period of time required to complete the work. This period is normally 12 to 18 months. If Congress makes funds available for this program in subsequent years, grantees may submit applications for appropriate projects for up to a total of three awards.

Evaluation Criteria

Evaluation criteria will not be assigned weights. Projects will be evaluated on the basis of the elements listed below to meet the goals described above. The content of the development plan and overall quality of the proposal and the economic distress of the area will be the principal factors considered in evaluating proposals from eligible entities. In assessing the distress factor, priority consideration will be given to proposals from states and urban areas experiencing substantial economic distress. In the case of urban areas, high priority will be given to those with unemployment rates two or more percentage points higher than the U.S. average and per capita income levels 80 percent or less of the U.S. average. For states, high priority will be given to those that meet both of the above criteria, as well as those that meet one of the above criteria and have distress equal to or greater than the national level for the other criterion. The most recent per capita income and 24-month average unemployment data available will be used to measure economic distress.

Proposals from states or urban areas which do not exhibit significant distress on the basis of unemployment or income data will not be considered unless other acceptable evidence of

substantial distress is provided by the applicant.

Proposals from states and urban areas which are both below the U.S. national unemployment rate and above the national per capita income are unlikely to be funded.

Proposals will be evaluated on the basis of the elements listed below.

1. Appropriateness of the work program to the section 302(a) program objectives;

2. The economic distress of the area served by the applicant;

3. Extent to which the proposed planning activities are expected to impact upon the service area's economic development needs, and the extent to which the proposal addresses the problems of the unemployed and underemployed of the area, including minorities, workers displaced by plant closings, etc.;

4. The proximity of the performing office to the chief executive (i.e., likelihood that the activities will have a significant influence on the policy and decision making process);

5. Past performance of currently or formerly funded grantees, when applicable;

6. The amount of local participation provided as matching dollars to the Federal funds; and

7. Other characteristics, such as involvement of the private sector businesses and professional groups in the proposed activities, and particularly for states, the innovativeness of the proposed approach and replicability of the model process or results.

Proposal Submission Procedures

Potential applicants should submit proposals that include:

1. A letter, signed by the chief executive of the applicant organization, indicating a desire to receive funds to carry out the planning activities outlined in the proposal; where the funded planning program will be placed in the organization, including the name and title of the person to be responsible for program implementation; the amount and for what period funding is being requested; and the anticipated funding arrangement if the planning activity is to continue beyond the period of EDA support.

2. Significant, verifiable information on the level of economic distress in the area, including unemployment and income data. Any major changes in distress levels during the past year should be described.

3. Information indicating the applicant's commitment to the proposed work program as demonstrated by amount of local funding and the degree of interest displayed by the chief executive.

4. A time chart showing all major work program elements, projected element start and completion dates, and the related financial expenditures programmed for each work element.

5. A work program of no more than 10 pages which outlines the specific planning activities that will be carried out under the grant and specifies which activities will be handled by in-house staff, consultants, etc. The work program should also explain the analysis and basis of the need for the proposed activities, expected impacts and their timing, target population(s), and involvement of the private sector in the proposed activities.

Current grantees seeking additional funding under this announcement should comply with the instructions of this notice. Current grantees must also include a 3–5 page progress report for the current grant when they submit the proposal and at the time they forward the formal application.

One copy of the proposal should be sent to the appropriate economic development representative, and an original and one copy to the appropriate EDA regional office. The EDA regional office and the name, address and telephone number of the economic development representative for the applicant's area can be found in Section XII of this Notice.

Formal Application Procedures

EDA will evaluate proposals using the selection criteria cited above. Once the merits of the proposal are established, EDA will initiate discussions with the prospective applicant to clarify and improve elements of the proposal, if necessary, and will invite those whose proposals are selected for funding consideration to submit formal applications, which will include an SF–424 (OMB Control No. 0348–0043), scope of work, proposed budget, staffing plan and other requested information. It should be noted that an invitation to submit a proposal does not assure EDA funding. Applications will be processed as they are received. Applications received after FY 1995 funds are exhausted may be retained by EDA for consideration for funding the following fiscal year, assuming funds are available.

Further Information

For further information contact the appropriate economic development representative, EDA regional office (see Section XII of this Notice), or the Director, Planning Division, Economic Development Administration, Room 7319, U.S. Department of Commerce, Washington, DC 20230; telephone (202) 482–3027.

VIII. Program: Research and Evaluation Projects

(Catalog of Federal Domestic Assistance: 11.312 Economic Development—Research and Evaluation Program) 13 CFR Part 307, Subpart C

Authority

Funds under the Research and Evaluation Program are used to support studies that will increase knowledge about the causes of economic distress and approaches to alleviating such problems. This program is authorized under Section 301(c) of the Public Works and Economic Development Act of 1965, as amended, 42 U.S.C. 3151(c).

Eligible Applicants

Eligible applicants for research and evaluation grants or cooperative agreements include private individuals, partnerships, corporations, associations, colleges and universities, and other suitable organizations with expertise relevant to economic development research.

Program Objective

The objectives of section 301(c) grants and cooperative agreements are the following:

1. To determine the causes of unemployment, underemployment, underdevelopment, and chronic depression in various areas and regions of the Nation.

2. To assist in the formulation and implementation of national, state, and local programs that will raise employment and income levels and otherwise produce solutions to problems resulting from the above conditions.

3. To evaluate the effectiveness of programs, projects, and techniques used to (a) alleviate economic distress and (b) promote economic development.

Funding Availability

Funds in the amount of $500,000 are available for this program. Funds will be used for projects selected through the application procedures described below and through EDA-initiated solicitations. Individual awards may vary but generally will not exceed $100,000.

Funding Instrument

EDA will provide grants and cooperative agreements covering up to 100 percent of project costs.

Project Duration

Assistance under this program will normally be for a period not exceeding 15 months.

Evaluation Criteria

To meet the goals described above, EDA will use the following unweighted criteria to evaluate research and evaluation proposals:

1. Suitability of the subject.
2. Potential usefulness of the research to state and local economic development officials and specialists.
3. General quality and clarity of the proposal.
4. Soundness and completeness of the research methodology.
5. Qualifications of principal investigator(s) and, where appropriate, performing organization(s).
6. Previous performance of principal investigator or performing organization on EDA-funded projects, if applicable.
7. Cost and value of proposed product in relation to cost.

EDA is interested in receiving proposals dealing with:

1. Employment and unemployment;
2. Income and poverty;
3. Rural and nonmetropolitan economic development;
4. Urban economic development;
5. Regional and local growth and competitiveness;
6. Industrial location, industrial networks, and industrial clustering;
7. Sustainable development and growth management;
8. Minority businesses and employment;
9. Export development;
10. Development finance; and
11. Productivity and technology.

Requests should be for specific, well-defined, one-time research projects. EDA research grants are not intended for support of continuing programs (permanent research programs, publication and information programs, periodic forecasts, etc.), or for non-research activities. EDA normally prefers research of broad geographic scope, that covers the whole country or a large multistate region, as opposed to research covering (in declining order of preference) a small region, a state, a multicounty area, or a single city or county. Preference will be given to practical cause-and-effect research and descriptive analyses, and funding for such will receive higher priority than theoretical studies, modeling (other than for hypothesis testing), etc. Economic development planning and technical assistance will not be funded under the Research and Evaluation Program; the Planning and Technical Assistance Programs are for those purposes.

Proposal Submission Procedures

Potential applicants should submit one original and two (2) copies of a brief and concise proposal, not to exceed 20 pages, and vita and capability information. Proposals should avoid long background discussions and literature surveys, but should be reasonably detailed, particularly in explaining value to EDA, methodology, and data sources.

Each proposal should include:

1. A cover page stating that funding is sought under EDA's Research and Evaluation program, giving a short descriptive project title, the name and address of the performing organization, the names and telephone numbers of the project director and principal investigators, the project duration, the amount of EDA funds requested, and total project cost;
2. A brief scope-and-objectives section indicating why the project is needed, giving its objectives, and providing a capsule description of the project;
3. A more detailed description of the project and its methodology;
4. A work plan showing different phases of the project and their timing;
5. A detailed budget, not to exceed two pages, showing cost breakdowns, with EDA-funded and non-EDA-funded costs presented in separate columns, where applicable, and with the EDA-funded costs adding to the total shown on the cover page;
6. Resumes for the project director and principal investigators; and
7. A corporate or institutional capability statement, where appropriate.

The cover letter accompanying the proposal should inform EDA of whether any other organization(s) or Federal agency(ies) is or will be considering the proposal. Any non-EDA contributions to the project, whether by the performing organization or third parties, should be identified.

The deadline for receipt of proposals will be three months after the date of this announcement.

Proposals should be submitted to the Director, Technical Assistance and Research Division, Economic Development Administration, Room 7315, U.S. Department of Commerce, Washington, DC 20230.

Formal Application Procedures

EDA will evaluate the proposals as they are received using the selection criteria described above. Organizations and individuals whose proposals are selected for further consideration will be invited to submit an application. The formal application will include an SF–424 (OMB Control No. 0348–0043).

Eligibility for Specific Solicitations

In addition to using research and evaluation funds to support proposals submitted under the procedures described above, EDA may during the fiscal year identify other studies, including program evaluations, for funding consideration.

Organizations and individuals interested in being invited to respond to Solicitations of Applications (SOAs) to conduct such studies should submit information on their capabilities and experience to the address listed above. This information will be used to determine eligibility to compete for projects under specific SOAs.

Further Information

For further information, contact the Director, Technical Assistance and Research Division, at the above address; telephone, (202) 482–4085.

IX. Program: Economic Adjustment Assistance (Title IX)

(Catalog of Federal Domestic Assistance No. 11.307 Special Economic Development and Adjustment Assistance Program—Long-Term Economic Deterioration (LTED) and Sudden and Severe Economic Dislocation (SSED)) 13 CFR Part 308

Authority

Funds under the Economic Adjustment Program are used to assist areas experiencing changes in their economic situation which are causing, or threaten to cause, serious structural damage to the underlying economic base. Such changes may occur suddenly or over time, and result from industrial or corporate restructuring in response to technological advancements or changes in the marketplace, new Federal laws or requirements, reductions in defense expenditures, depletion of natural resources and natural disasters. Strategy grants provide the resources for organizing and conducting a strategic planning process and Implementation grants support one or more activities identified in an adjustment strategy approved, though not necessarily funded by EDA. Such activities include but are not limited to: the creation or expansion of strategically targeted business development and financing programs, infrastructure improvements, organizational development, and market or industry research and analysis. This program is authorized under Title IX of the Public Works and Economic Development Act of 1965, as amended, 42 U.S.C. 3241–3245.

Program Objective

The purpose of the Economic Adjustment Program is to enable

communities in affected areas to meet the challenge of economic change, constructively and effectively, through strategies for inducing capital investment in production of the types of goods and/or services for which the community may have or be able to develop a comparative economic advantage, and which will lead to saving and/or creating permanent jobs. In providing funding to support the adjustment process, EDA's objectives are to: (1) Provide impacted communities with the skills and knowledge needed to organize and carry out a strategic planning process focusing on increasing the productivity and competitiveness of a community's assets, for example, existing industries and business acumen, natural resources, and labor force skills; (2) expand the capacity of public officials and development organizations to work more effectively with their business community to identify and address unmet needs of strategically targeted firms for management assistance, access to information to help with marketing and modernization and finding sources of financing, and in organizing collaborative alliances among firms for such activities as product and market research, and new product development; (3) assist communities overcome critical impediments to implementing their adjustment strategy, such as a lack of available financing for the targeted businesses or weaknesses in their economic infrastructure for which no other sources of funding, including EDA's Title I Program, are available; (4) enable communities to coordinate and strategically target Federal resources available to support economic recovery from Federal actions adversely affecting a major industrial sector and/or the economy of a discrete geographic region, and from natural disasters; and (5) encourage the development of innovative public/private approaches to economic restructuring and revitalization.

Funding Availability

Funds in the amount of $45 million are available for the Economic Adjustment Program in FY 1995. Grants awarded under this program generally range between $25,000 and $5 million.

Funding Instrument

Title IX funds are awarded through grants generally not to exceed 75 percent of the project cost. Acceptable sources of the local share include, but are not limited to, local government general revenue funds; Community Development Block Grant (CDBG) entitlement funds or balance of state awards; and other public and private donations. The Assistant Secretary may waive all or part of the 25 percent nonfederal share of economic adjustment assistance grants, if he determines that the nonfederal share is not reasonably available because of the critical nature of the situation requiring economic adjustment assistance or for other good cause. The full amount of the local share need not be in hand at the time of application; however, the applicant must have a firm commitment from identified source(s), and the funds must be readily available. The local share must not be encumbered in any way that would preclude its use as required by the grant agreement. The local share for grants to establish or recapitalize a revolving loan fund (RLF) must be in cash, and while the local share for grants for other activities may be cash or in-kind, priority consideration will be given to proposals with a cash local share.

Eligible Applicants

Eligible applicants within areas meeting the EDA eligibility criteria described below include a redevelopment area or economic development district established under Title IV; an Indian tribe; a state; a city or other political subdivision of a state, or a consortium of such political subdivisions; a Community Development Corporation defined in the Community Economic Development Act of 1981, 42 U.S.C. 9802 (i.e., Community Development Corporations receiving financial assistance under the authority of the Community Services Block Grant Act, as amended, 42 U.S.C. 9910(d)); a nonprofit organization determined by EDA to be the representative of a redevelopment area for purposes of the particular project; the Federated States of Micronesia, the Republic of the Marshall Islands, the Commonwealth of Puerto Rico, the Virgin Islands, Guam, American Samoa, and the Commonwealth of the Northern Mariana Islands.

Eligible Areas

The area(s) to be assisted by the applicant generally must be eligible on the basis of the criteria, described below, for establishing that it is experiencing either Long-Term Economic Deterioration or a Sudden and Severe Economic Dislocation.

A. Long-Term Economic Deterioration (LTED)

To receive priority consideration for funding as an LTED area, the area must be experiencing at least one of three economic problems: very high unemployment; low per capita income; or chronic distress (i.e., failure to keep pace with national economic growth trends over the last five years). Priority will be given to those areas with two or more of these indicators. Eligibility is generally determined statistically. Further information is available from EDA's regional offices or the economic development representative for your area (see Section XII of this Notice).

B. Sudden and Severe Economic Dislocation (SSED)

To receive priority consideration for funding as an SSED area, the area must show actual or threatened permanent job losses that exceed the following threshold criteria, unless otherwise determined by the Assistant Secretary:

1. For areas not in Metropolitan Statistical Areas:

a. If the unemployment rate of the Labor Market Area exceeds the national average, the dislocation must amount to the lesser of two (2.0) percent of the employed population, or 500 direct jobs.

b. If the unemployment rate of the Labor Market Area is equal to or less than the national average, the dislocation must amount to the lesser of four (4.0) percent of the employed population, or 1,000 direct jobs.

2. For areas within Metropolitan Statistical Areas:

a. If the unemployment rate of the Metropolitan Statistical Area exceeds the national average, the dislocation must amount to the lesser of one-half (0.5) percent of the employed population, or 4,000 direct jobs.

b. If the unemployment rate of the Metropolitan Statistical Area is equal to or less than the national average, the dislocation must amount to the lesser of one (1.0) percent of the employed population or 8,000 direct jobs.

In addition, fifty (50) percent of the job loss threshold must result from the action of a single employer, or eighty (80) percent of the job loss threshold must occur in a single standard industry classification (i.e., two digit SIC code).

In the case of a Presidentially declared natural disaster, the area eligibility criteria are waived. In other exceptional circumstances, the criteria may be partially or fully waived at the discretion of the Assistant Secretary.

Actual dislocations must have occurred within one year and threatened dislocations must be anticipated to occur within two years of the date EDA is contacted.

Project Duration

Projects are expected to be completed in a timely manner consistent with the nature of the project. However, the

maximum period for which assistance will be provided shall not be more than five years from date of award.

Evaluation Criteria

All proposals, regardless of the basis for the area's eligibility, will be screened for conformance to statutory and regulatory requirements, the relative severity of the area's economic problem, the quality of the strategy developed (or scope of work for the strategy to be developed) to address the problem, the merits of the activity(ies) for which funding is requested, and ability of the prospective applicant to carry out the proposed activity(ies) successfully.

Particular program requirements and factors are not weighted in EDA's evaluation of proposals as all factors are equally important. Projects will be evaluated on the basis of the elements listed below in order to meet the goals described above.

A. For Strategy Grants

1. The applicant organization has the necessary authority, mandate and capacity to lead and manage the planning process and implementation of the resulting strategy.

2. The planning process provides for the representation of public and private sector entities with a contribution to make to the development of the strategy and/or on which accomplishment of the strategic objectives will depend. These entities include public program and service providers, trade and business associations, educational and research institutions, community development corporations, etc.

3. The proposed scope of work focuses on the specific economic problems to be addressed and provides for undertaking the appropriate research and analysis needed to formulate a realistic, market-based, adjustment strategy.

B. For Implementation Grants

1. Any activity or project proposed for funding must generally be clearly identifiable as an integral and priority element within an adjustment strategy for the eligible area(s) prepared or updated within the preceeding two years. The strategy should address and/or provide evidence of the following:

a. An appropriately designed and conducted planning process;

b. A thorough understanding of the economic problems being addressed;

c. A sound analysis of the industry sectors and the firms within them that comprise the area's economic base, and of the particular strengths and weaknesses of the area that contribute to, or detract from, its current and potential economic competitiveness.

d. Strategic objectives that flow from the economic analysis and conclusions and focus on stimulating investment in new and/or expanding economic activities that offer the best prospects for revitalization and growth;

e. Appropriate and necessary resources in the area and elsewhere have been/will be mobilized and coordinated to support implementation of the strategy; and

f. The performance measures which the applicant will use to assess progress toward accomplishing its strategic objectives.

2. All individual activities or projects proposed for funding must be consistent with one or more of the Economic Adjustment Program objectives stated above. Particular consideration will be given to proposals involving innovative approaches to building and implementing public/private and multifirm partnerships for such purposes as new product development and marketing, and dissemination and application of new production technologies and management practices.

3. Proposals for capitalizing or recapitalizing a RLF must in addition describe and/or provide evidence of:

a. The need for a new or expanded public financing tool to complement other business assistance programs and services available to firms and/or would-be entrepreneurs in industry sectors and/or locations targeted by the adjustment strategy;

b. The types of financing activities anticipated; and

c. The prospective RLF's organizational capacity to work effectively with the business community and other financing providers, to function as an integral part of the overall economic adjustment effort and to manage the lending function.

Proposal Submission Procedures

Interested parties should contact the economic development representative for the area or the appropriate EDA regional office (see Section XII of this Notice) for a proposal package.

Application Procedures

Following a review of project proposals, EDA will invite those proponents of projects selected for funding consideration to submit applications. It should be noted that an invitation to apply does not assure funding. The application will include an ED–540, as approved by the Office of Management and Budget Control No. 0610–0058. Applicants for RLF funding are generally required to submit a RLF Plan in addition to the adjustment strategy for the area. Guidelines on RLF's are available from the regional offices.

Further Information

For further information, contact the appropriate economic development representative, EDA regional office (see Section XII of this Notice), or the Director, Economic Adjustment Division, Economic Development Administration, Room 7327, U.S. Department of Commerce, Washington, DC 20230; telephone (202) 482–2659.

X. Program: Defense Conversion Assistance

(Catalog of Federal Domestic Assistance No: 11.307 Special Economic Development and Adjustment Assistance Program—Long-Term Economic Deterioration (LTED) and Sudden and Severe Economic Dislocation (SSED)) 13 CFR Part 308

Authority

Funds under the Defense Conversion program are used to enable areas where economies are adversely impacted by reductions in defense spending, to facilitate the orderly redeployment of their defense created assets to activities which help restructure and/or strengthen their economic base. Areas experiencing closure of a military facility, a defense related Department of Energy facility and/or reductions in defense procurements may be eligible for assistance. This program is authorized under section 4103(b) of Division D of Public Law 101–510 for FY 1991, and section 4305 of Division D of Public Law 102–484 for FY 1993, 10 U.S.C. 2391 note; and by the Public Works and Economic Development Act of 1965, as amended, 42 U.S.C. 3131, 3151(a), 3151(b), and 3171(a)(3).

Program Objective

The program is designed to provide defense impacted communities with the resources to develop and/or carry out programs and projects, singly or in combination, that support implementation of a defense conversion strategy or base re-use plan. Commonly funded types of programs and projects include, but are not limited to: planning and strategy development (only as may be necessary to complement and expand work funded by the Office of Economic Adjustment, Department of Defense); research and analysis, such as marketing and feasibility studies; design and delivery of conversion or development assistance and services for affected businesses, typically smaller defense contractors in order to, for example, fill gaps in available technical services, developing collaborative alliances for

new product and market development, and establishing or expanding financing programs for targeted businesses; and infrastructure improvements needed to facilitate the re-use of former military facilities.

Assistance may be provided directly to affected communities, and also through other entities, such as states or regional development organizations, when to do so would result in more effective and efficient delivery of a particular service or program.

Funding Availability

Funds in the amount of $120 million are available for the Defense Conversion program in FY 1995. Grants awarded under this program generally range between $25,000 and $5 million.

Note: The Selection Criteria and Application Procedures set forth in this announcement supersede those previously announced in the **Federal Register** of May 6, 1993 (58 FR 27188), and apply to the unobligated balance of the $80 million authorized under section 4305 of Division D of Public Law 102–484 and of the $50 million authorized under section 4103(b) of Division D of Public Law 101–510.

Funding Instrument

Assistance is in the form of grants, which will normally be awarded under the authority of EDA's Title IX Economic Adjustment program. However, grants for assistance under the Defense Conversion program may also be made to applicants eligible for assistance under the Title I Public Works and the Title III Technical Assistance, Research and Planning programs.

Title IX grants may be awarded for up to 75 percent of the total project cost. Acceptable sources of the local share include, but are not limited to, local government general revenue funds; Community Development Block Grant (CDBG) entitlement funds or balance of state awards; and other public and private donations. The Assistant Secretary may waive all or part of the 25 percent nonfederal share of economic adjustment assistance grants, if he determines that the nonfederal share is not reasonably available because of the critical nature of the situation requiring economic adjustment assistance or for other good cause. The full amount of the local share need not be in hand at the time of application; however, the applicant must have a firm commitment from identified source(s), and the funds must be readily available. The local share must not be encumbered in any way that would preclude its use as required by the grant agreement. The local share for a revolving loan fund project must be in cash, and while the local share for other types of defense conversion activities may be cash or in-kind, priority consideration will be given to proposals with a cash local share.

For information regarding local share requirements for the Title I Public Works and the Title III Technical Assistance, Research and Planning programs, Sections II, IV and VI of this Announcement should be consulted.

In accordance with Public Law 103–317, financial assistance may be provided for projects to be located on military installations closed or scheduled for closure or realignment to eligible grantees under PWEDA without it being required that the grantee have title or ability to obtain a lease for the property, for the useful life of the project when, in the opinion of the Secretary of Commerce such financial assistance is necessary for the economic development of the area; and the Secretary of Commerce may, as he or she deems appropriate, consult with the Secretary of Defense regarding title to the land on military installations closed or scheduled for closure or realignment.

Eligible Applicants

Eligible applicants within areas meeting the eligibility criteria described below include a redevelopment area or economic development district established under Title IV of this Act, 42 U.S.C. 3161; an Indian tribe; a state; a city or other political subdivision of a state, or a consortium of such political subdivisions; a Community Development Corporation defined in the Community Economic Development Act of 1981, 42 U.S.C. 9802 (i.e., Community Development Corporations receiving financial assistance under the authority of the Community Services Block Grant Act, as amended, 42 U.S.C. 9910(d)); a nonprofit organization determined by EDA to be the representative of a redevelopment area; and the Federated States of Micronesia, the Republic of the Marshall Islands, the Commonwealth of Puerto Rico, the Virgin Islands, Guam, American Samoa, and the Commonwealth of the Northern Mariana Islands.

For assistance under the Title I Public Works program, and Title III Technical Assistance, Research and Planning programs, Sections II, IV and VI of this Announcement should be consulted.

Applicants must meet either the Department of Defense criteria or the Economic Adjustment program criteria described in A and B below:

A. Department of Defense Criteria

(1) In the case of a proposed or actual establishment, realignment, or closure of a military installation, where the Secretary of Defense determines that such action is likely to have a direct and significantly adverse consequence on the affected community.

(2) In the case of a publicly announced planned reduction in DOD spending, the cancellation or termination of a DOD contract, or the failure to proceed with a previously approved major defense acquisition program, assistance may be provided only if the reduction, cancellation, termination, or failure will have a direct and significant adverse impact on a community and will result in the loss of the lesser of:

(a) 2,500 or more employee positions, in the case of a Metropolitan Statistical Area (MSA) or similar area (as defined by the Director of the Office of Management and Budget);

(b) 1,000 or more employee positions, in the case of a labor market area outside of an MSA; or

(c) one percent of the total number of civilian jobs in that area.

B. EDA Criteria

The dislocation must satisfy one of the following criteria (in exceptional circumstances, the criteria may be partially waived by the Assistant Secretary for Economic Development):

(1) For areas not in MSAs:

(a) If the unemployment rate of the Labor Market Area exceeds the national average, the dislocation must amount to the lesser of two (2.0) percent of the employed population, or 500 direct jobs.

(b) If the unemployment rate of the Labor Market Area is equal to or less than the national average, the dislocation must amount to the lesser of four (4.0) percent of the employed population, or 1,000 direct jobs.

(2) For areas within MSAs:

(a) If the unemployment rate of the MSA exceeds the national average, the dislocation must amount to the lesser of one-half (0.5) percent of the employed population, or 4,000 direct jobs.

(b) If the unemployment rate of the MSA is equal to or less than the national average, the dislocation must amount to the lesser of one (1.0) percent of the employed population, or 8,000 direct jobs.

Under the Defense program, an area will normally be eligible for up to two years before the announced date for a base closure or contract reduction and for two years after. However, if completion of an area's adjustment strategy is delayed for good reason, the

area's eligibility may be extended for up to one year from the date the strategy is accepted by EDA.

Project Duration

Projects are expected to be completed in a timely manner consistent with the nature of the project. However, the maximum period for which assistance will be provided shall not be more than five years from date of award for Title I and Title IX projects. For projects under Title III Technical Assistance, Research and Planning programs, assistance will be for the period of time required to complete the scope of work, which typically will not exceed twelve months.

Evaluation Criteria

Evaluation criteria will not be assigned weights as all factors are equally important. Projects will be evaluated on the basis of the elements listed below in order to meet the goals described above. Key factors in EDA's evaluation of proposed defense conversion projects include:

1. The relative severity of the impact of the defense cutbacks on the economic and employment base of the area(s).

2. The quality of the area economic adjustment/defense conversion strategy or base reuse plan which is a prerequisite for funding consideration. The plan should address and/or provide evidence of the following:

a. An appropriately designed and conducted planning process;

b. The scale and characteristics of the impact of the defense cutbacks on workers, industry sectors and businesses;

c. Strategic objectives that address the defense related problems and opportunities, are appropriate to the area's particular economic attributes and circumstances, and are based on sound research and analysis;

d. All appropriate and available Federal, State and local resources, programs, services, etc., have been identified and will be mobilized and coordinated to support implementation of the strategy; and

e. The performance measures which the applicant will use to assess progress toward accomplishing its strategic objectives.

Note: EDA may, in some instances, consider funding a project prior to completion of the strategy/plan, provided that (a) an appropriate community planning process is underway, (b) sufficient analysis has been done to show that the proposed project is economically viable and potentially consistent with the evolving strategy and (c) the proposed project has the support of the community.

3. The degree to which the proposed program/project contributes to:

a. Productive redeployment of defense created assets (facilities, workforce skills, industrial technologies and production capacity);

b. Overcoming critical impediments to a community's ability to progress with implementing its strategy or base reuse plan; and

c. Facilitating/stimulating private sector investment in the production of the types of goods and services that will strengthen the economic base of the area over the long term, and lead to the generation of new employment opportunities and revenue.

4. The capacity of the prospective applicant to administer the proposed project and ensure achievement of the stated objectives.

Proposal Submission Procedures

When a major defense cutback is announced, EDA's economic development representative for the state in which it is to occur will normally contact officials of the affected community. Otherwise, the interested parties should contact either the economic development representative for the area or the appropriate EDA regional office (see Section XII of this Notice). The economic development representative will track the community's strategy/base reuse planning process and provide information regarding activities/projects that could be considered for EDA assistance. At such time as the planning process is sufficiently advanced for prospective implementation programs and projects to have been identified, the economic development representative will advise the community on the preparation of a short funding proposal.

Application Procedures

EDA will evaluate proposals using the evaluation criteria cited above. Once the merits of the proposal are established, EDA will work if necessary with the prospective applicant to clarify elements of the proposal and such EDA administrative policies and requirements as may apply to the particular type of program or project for which assistance is being requested. For example, applicants for assistance to capitalize a revolving loan fund (RLF) are generally required to submit a RLF Plan.

When a proposal is selected for funding consideration, EDA will invite the proponent to submit a formal application under the authority of the specified funding program, i.e., Title I, III or IX. The appropriate formal application package will be provided. It should be noted that an invitation to apply does not assure funding.

Further Information

For further information, contact the appropriate economic development representative, EDA regional office (see Section XII of this Notice), or the Director, Economic Adjustment Division, Economic Development Administration, Room 7327, U.S. Department of Commerce, Washington, DC 20230; telephone (202) 482–2659.

XI. Program: Trade Adjustment Assistance

(Catalog of Federal Domestic Assistance: 11.313 Economic Development—Trade Adjustment Assistance) 13 CFR Part 315

Authority

Funds under the Trade Adjustment Assistance Program are awarded to a network of Trade Adjustment Assistance Centers (TAACs), located around the Nation, which provide technical assistance to certified firms adversely affected by increased imports. This program is authorized under Title II, Chapter 3 of the Trade Act of 1974, 19 U.S.C. 2341–2355.

Funding Availability

Funds in the amount of $10.0 million are available for trade adjustment assistance. Nearly all of these funds will be provided to the nationwide network of TAACs through cooperative agreements. Individual awards generally range between $650,000 and $1.025 million. No new centers will be funded in FY 1995.

Funds are also awarded under this program to organizations representing trade-injured industries. Limited funds are available for industry technical assistance for continuation of an existing program. No new industry assistance projects are expected to be funded in FY 1995.

Program Objective

The Trade Adjustment Assistance Program is designed to provide technical assistance to certified firms and industries hurt by the impact of increased imports. The TAACs help firms submit certification petitions to the Trade Adjustment Assistance Division (TAAD) of EDA. If the firm is certified, TAACs provide technical assistance to the firm in developing a strategy to adjust to the import injury. A firm should work closely with the appropriate TAAC in petitioning for certification. Certified firms should also work closely with the appropriate TAAC in diagnosing their problems and developing an adjustment proposal, and

in applying for technical assistance if their adjustment proposal is accepted by EDA.

An industry association or other organization interested in receiving an industry assistance cooperative agreement must meet with a TAAD representative to discuss the industry's problems, opportunities, and assistance needs.

Criteria for Evaluating Industry Assistance Proposals

Industry associations and other organizations seeking trade adjustment industry assistance must demonstrate that the industry is injured by foreign trade and that the activities to be funded will yield some short-term actions that the industry itself (and individual firms) can and will take toward the restoration of the industry's international competitiveness. Evaluation criteria will not be assigned weights as all factors are equally important. Projects will be evaluated on the basis of the elements listed below in order to meet the goals described above.

The emphasis is on practical results that can be implemented in the near term, and long-term research and development activities are given low priority. It is also expected that the industry will continue activities on its own without the need for continued Federal assistance.

Application Procedures

Industry associations or other organizations seeking industry assistance must submit an application identified as Standard Form 424 (OMB Control No. 0348–0043), if encouraged to do so as a result of the meeting with a TAAD representative.

Acceptable industry assistance applications will be processed as funds are available; normally one to three months is required for final decision on application.

Formula and Matching Requirements

Generally, a minimum of 50 percent share is required for industry assistance cooperative agreements.

Length and Time Phasing of Assistance

Industry assistance cooperative agreements are generally for a 12-month period, but may be longer for tasks requiring more time to complete.

Further Information

For further information, contact the Director, Trade Adjustment Assistance Division, Economic Development Administration, Room 7023, U.S. Department of Commerce, Washington, DC 20230; telephone (202) 482–3373.

XII. EDA Regional Offices and Economic Development Representatives

The EDA regional and field offices, states covered, and the economic development representatives (EDRs) are listed below.

EDRs	States covered
Atlanta Regional Office 401 West Peachtree Street, N.W., Suite 1820 Atlanta, Georgia 30308–3510 Telephone: (404) 730–3002	
Burnette, F. Wayne, Aronov Building, Room 705, 474 South Court Street, Montgomery, AL 36104, Telephone: (205) 223–7008.	Alabama.
Smith, Lola B., Federal Building, Room 423, 80 North Hughey Avenue, Orlando, FL 32801, Telephone: (407) 648–6572.	Florida.
Day, William J., Jr., 401 West Peachtree Street, N.W., Suite 1820, Atlanta, GA 30308–3510, Telephone: (404) 730–3000.	Georgia.
Hunter, Bobby D., 771 Corporate Drive, Suite 200, Lexington, KY 40503–5477, Telephone: (606) 224–7426	Kentucky.
Ainsworth, Bob, 221 Federal Building, 100 West Capital Street, Jackson, MS 39269, Telephone: (601) 965–4342 ..	Mississippi.
Jones, Dale L., P.O. Box 2522, Raleigh, NC 27601, Telephone: (919) 856–4570	North Carolina.
Dixon, Patricia M., Strom Thurmond Federal Building, 1835 Assembly Street, Room 307, Columbia, SC 29201, Telephone: (803) 765–5676.	South Carolina.
Parks, Mitchell S., 261 Cumberland Bend Drive, Nashville, TN 37228, Telephone: (615) 736–5911	Tennessee.
Austin Regional Office Thornberry Building, Suite 121 903 San Jacinto Boulevard Austin, Texas 78701–2450 Telephone: (512) 482–5461	
Spearman, Sam, Room 2509, Federal Building, 700 West Capitol, Little Rock, AR 72201, Telephone: (501) 324–5637.	Arkansas.
Davidson, Pamela, 412 North Fourth Street, Room 104, Baton Rouge, LA 70802–5523, Telephone: (504) 389–0227.	Louisiana.
Swearingen, James, P.O. Box 2662, Santa Fe, NM 87504, Telephone: (505) 988–6557	New Mexico.
Waters, Alvin X. Jr., 5500 North Western, Suite 148, Oklahoma City, OK 73118–4011, Telephone: (405) 231–4198	Oklahoma.
Ramirez, Roy, Suite 121, Thornberry Building, 903 San Jacinto Boulevard, Austin, TX 78701–2450, Telephone: (512) 482–5118.	Texas (south).
Jacob, Lawrence, Suite 121, Thornberry Building, 903 San Jacinto Boulevard, Austin, TX 78701–2450, Telephone: (512) 482–5119.	Texas (north).
California Field Office Oakland Federal Building 1301 Clay Street, Suite 675N Oakland, California 94612–5217 Telephone: (510) 637–2988	
Sosson, Deena R., 1345 J Street, Suite B, Sacramento, CA 95814, Telephone: (916) 551–1541	California (northern).
Lewis, William J., 1345 J Street, Suite A, Sacramento, CA 95814, Telephone: (916) 551–2160	California (central).

EDRs	States covered
Oaks, Charles W., 297 Marengo Avenue, Room 100, Pasadena, CA 91102–6020, Telephone: (818) 583–6967	California (southern).
Chicago Regional Office 111 North Canal Street, Suite 855 Chicago, IL 60606–7204 Telephone: (312) 353–7706	
Casals, Alfred L., 509 West Capitol, Suite 204, Springfield, IL 62704, Telephone: (217) 492–4224	Illinois.
Henderson, Richard L., Federal Building Courthouse, Room 402, 46 East Ohio Street, Indianapolis, IN 46204, Telephone: (317) 226–6104.	Indiana.
Collison, James L., 100 North Warren Avenue, Room 1018, Saginaw, MI 48606–0867, Telephone: (517) 758–4097.	Michigan.
Arnold, John B. III, 104 Federal Building, 515 West First Street, Duluth, MN 55802, Telephone: (218) 720–5326	Minnesota.
Hickey, Robert F., Federal Building, Room 607, 200 North High Street, Columbus, Ohio 43214, Telephone: (614) 469–7314.	Ohio.
Price, Jack D., 1320 W. Clairemont Ave., Suite 114, Eau Claire, WI 54701, Telephone: (715) 834–4079	Wisconsin.
Denver Regional Office 1244 Speer Boulevard, Room 670 Denver, Colorado 80204 Telephone: (303) 844–4714	
Zender, John, 1244 Speer Boulevard, Room 632, Denver, CO 80204, Telephone: (303) 844–4902	Colorado, Kansas.
Cecil, Robert, Federal Building, Room 593A, 210 Walnut Street, Des Moines, IA 50309, Telephone: (515) 284–4746.	Iowa.
Paul Hildebrandt, Federal Building, Room B–02, 608 East Cherry, Columbia, MO 65201, Telephone: (314) 442–8084.	Missouri.
Rogers, John C., Federal Building, Room 196, Drawer 10074, Helena, MT 59626, Telephone: (406) 449–5074	Montana.
Albertson, Warren A., Federal Building, Room 219, Pierre, SD 57501, Telephone: (605) 224–8280	Nebraska, South Dakota.
Grant, Cornelius P., P.O. Box 1911, Bismarck, ND 58501, Telephone: (701) 250–4321	North Dakota.
Ockey, Jack, Federal Building, Room 2414, 125 South State Street, Salt Lake City, UT 84138, Telephone: (801) 524–5119.	Utah, Wyoming.
Philadelphia Regional Office Curtis Center Independence Square West Suite 140 South Philadelphia, PA 19106 Telephone: (215) 597–4603	
Hammarlund, C.N. Jr., Federal Office Building, Room 453, 450 Main Street, Hartford, CT 06103, Telephone: (203) 240–3256.	Connecticut, Rhode Island.
Flynn, Patricia A., 2568–A Riva Road, Suite 200, Annapolis, MD 21401–7450, Telephone: (410) 962–2513	Delaware, Maryland, District of Columbia.
Blitz, Sandford, Federal Building, Room 410D, 40 Western Avenue, Augusta, ME 04330, Telephone: (207) 622–8271.	Maine.
Fitzhenry, William A., Boston Federal Office Building, 10 Causeway Street, Room 420 (Box 2), Boston, MA 02222–1036, Telephone: (617) 565–7235.	Massachusetts.
Potter, Rita V., 143 North Main Street, Suite 209, Concord, NH 03301, Telephone: (603) 225–1624	New Hampshire, Vermont.
Rossignol, Clifford J., 44 South Clinton Avenue, Room 703, Trenton, NJ 08609, Telephone: (609) 989–2192	New Jersey.
Marshall, Harold J. II, 620 Erie Boulevard West, Suite 104, Syracuse, NY 13204, Telephone: (315) 423–5203	New York.
Pecone, Anthony M., 1933A New Berwick Highway, Bloomsburg, PA 17815, Telephone: (717) 389–7560	Pennsylvania.
Cruz, Ernesto L., Federal Office Building, Room 620, 150 Carlos Chardon Avenue, Hato Rey, PR 00918–1738, Telephone: (809) 766–5187.	Puerto Rico, Virgin Islands.
Noyes, Neal E., 700 Centre Building, Room 230, 704 E. Franklin Street, Richmond, VA 23219, Telephone: (804) 771–2061.	Virginia.
Davis, R. Byron, Rose City Press Building, 550 Eagan Street, Room 305, Charleston, WV 25301, Telephone: (304) 347–5252.	West Virginia.
Seattle Regional Office Jackson Federal Building, Room 1856 915 Second Avenue Seattle, Washington 98174 Telephone: (206) 220–7660	
Richert, Bernhard E. Jr., 605 West 4th Avenue, Room G–80, Anchorage, AK 99501–7594, Telephone: (907) 271–2274.	Alaska.
Perot, C. Antony, Phoenix Plaza, Suite 965, 2901 North Central, Phoenix, AZ 85012, Telephone: (602) 640–2541 .	Arizona, Nevada (except Elko, Eureka and White) Pine Counties).

EDRs	States covered
McChesney, Frank, P.O. Box 50264, Federal Building, Room 4106, Honolulu, HI 96850, Telephone: (808) 541–3391.	Hawaii, Guam, American Samoa, Marshall Islands, Micronesia, Northern Marianas.
Ames, Aldred F., Room 441, 304 North 8th Street, Boise, ID 83702, Telephone: (208) 334–1533	Idaho, Nevada (counties of Elko, Eureka & White Pine).
Berblinger, Anne S., One World Trade Center, 121 S.W. Salmon Street, Suite 244, Portland, OR 97204, Telephone: (503) 326–3078.	Oregon.
Kirry, Lloyd P., Jackson Federal Building, 915 Second Avenue, Room 1856, Seattle, WA 98174, Telephone: (206) 220–7682.	Washington.

Dated: March 8, 1995.

William W. Ginsberg,

Assistant Secretary for Economic Development.

[FR Doc. 95–6261 Filed 3–13–95; 8:45 am]

BILLING CODE 3510–24–P

federal register

Tuesday
March 14, 1995

Part X

The President

Proclamation 6775—National Park Week

Federal Register
Vol. 60, No. 49
Tuesday, March 14, 1995

Presidential Documents

Title 3—

The President

Proclamation 6775 of March 10, 1995

National Park Week, 1995

By the President of the United States of America

A Proclamation

Each National Park is a classroom without walls, a living laboratory for learning about natural environments, important historical events, and valuable cultural resources that make up our national heritage. To preserve this heritage, the National Park Service works with students and teachers to create exciting learning environments in which to activate a child's interest.

Within each park lies a compelling story—a powerful reminder of our Nation's origins and destiny. Geology, political science, marine ecology, the Civil War, language, art, music, maritime history, geography, wildlife, the American Revolution, technology—all come to life in our National Park System. Today, the men and women of the National Park Service are reaching out to the next generation of caretakers, instilling in our children a respect for the land, an understanding of our common American heritage, and an appreciation of parks as places of inspiration.

Through innovative educational programs, the National Park Service is actively building a new constituency of park supporters who will carry with them the most valued lessons of our country. ''Junior Ranger'' programs throughout the United States help children understand the wonders of the national parks and the importance of preserving them for years to come. ''Parks As Classrooms'' links parks with local schools and communities, reaching out to new audiences with hands-on activities. Residential camping programs open up new worlds of exploration and self-discovery for today's young people, in both inner cities and rural areas. Seminars for teachers assist in encouraging and improving the connections of young people to park areas.

National Park Week, 1995, is a time to celebrate the rich educational tradition of our parks. I encourage all Americans to join me in observing National Park Week as the beginning of a lifetime of learning, appreciating, and acting on behalf of our national treasures. I call on all Americans to learn more about our National Park System and to observe this week with appropriate ceremonies and programs.

NOW, THEREFORE, I, WILLIAM J. CLINTON, President of the United States of America, by virtue of the authority vested in me by the Constitution and laws of the United States, do hereby proclaim the week of May 22 through May 28, 1995, as ''National Park Week.''

IN WITNESS WHEREOF, I have hereunto set my hand this tenth day of March, in the year of our Lord nineteen hundred and ninety-five, and of the Independence of the United States of America the two hundred and nineteenth.

William J. Clinton

[FR Doc. 95–6477
Filed 3-13-95; 10:12 am]
Billing code 3195–01–P

Reader Aids

Federal Register

Vol. 60, No. 49

Tuesday, March 14, 1995

INFORMATION AND ASSISTANCE

Federal Register

Index, finding aids & general information	**202–523–5227**
Public inspection announcement line	**523–5215**
Corrections to published documents	**523–5237**
Document drafting information	**523–3187**
Machine readable documents	**523–4534**

Code of Federal Regulations

Index, finding aids & general information	**523–5227**
Printing schedules	**523–3419**

Laws

Public Laws Update Service (numbers, dates, etc.)	**523–6641**
Additional information	**523–5230**

Presidential Documents

Executive orders and proclamations	**523–5230**
Public Papers of the Presidents	**523–5230**
Weekly Compilation of Presidential Documents	**523–5230**

The United States Government Manual

General information	**523–5230**

Other Services

Data base and machine readable specifications	**523–4534**
Guide to Record Retention Requirements	**523–3187**
Legal staff	**523–4534**
Privacy Act Compilation	**523–3187**
Public Laws Update Service (PLUS)	**523–6641**
TDD for the hearing impaired	**523–5229**

ELECTRONIC BULLETIN BOARD

Free **Electronic Bulletin Board** service for Public Law numbers, Federal Register finding aids, and list of documents on public inspection. **202–275–0920**

FAX-ON-DEMAND

You may access our Fax-On-Demand service. You only need a fax machine and there is no charge for the service except for long distance telephone charges the user may incur. The list of documents on public inspection and the daily Federal Register's table of contents are available using this service. The document numbers are 7050-Public Inspection list and 7051-Table of Contents list. The public inspection list will be updated immediately for documents filed on an emergency basis.
NOTE: YOU WILL ONLY GET A LISTING OF DOCUMENTS ON FILE AND NOT THE ACTUAL DOCUMENT. Documents on public inspection may be viewed and copied in our office located at 800 North Capitol Street, N.W., Suite 700. The Fax-On-Demand telephone number is: **301–713–6905**

FEDERAL REGISTER PAGES AND DATES, MARCH

11017–11608.....1
11609–11896.....2
11897–12102.....3
12103–12394.....6
12395–12658.....7
12659–12858.....8
12859–13022.....9
13023–13366.....10
13367–13612.....13
13613–13888.....14

CFR PARTS AFFECTED DURING MARCH

At the end of each month, the Office of the Federal Register publishes separately a List of CFR Sections Affected (LSA), which lists parts and sections affected by documents published since the revision date of each title.

3 CFR

Proclamations:
6772.....11609
6773.....12101
6774.....12657
6775.....13887
Executive Orders:
November 24, 1916 (Revoked in part by PLO 7121).....12886
12903 (Superseded by EO 12955).....13365
12954.....13023
12955.....13365
Administrative Orders:
Memorandums:
March 2, 1995 12393
Presidential Determinations:
No. 95–15 of Feb. 28, 1995 12859

5 CFR

362.....11017
532.....12395, 12396
582.....13027
731.....13613
843.....13034
1300.....12396
1650.....13604
1653.....13604
Ch. LXXVII.....12396
Proposed Rules:
Ch. XIV 11057

7 CFR

29 .....12398, 12399, 12400, 13515
51.....11242
56.....12401, 13780
58.....11246
354.....11897
372.....13212
989.....12403
1209.....13613
1210.....13515
1942.....11019
Proposed Rules:
51.....11918
58 .....11919, 12154, 12156
319.....13382
945.....13080
1099.....12907
1230.....13384
1940.....13650

9 CFR

77.....11898
317.....12883
381.....12883
Proposed Rules:
1.....12908
3.....12908
102.....12159, 12162
104.....12159
105.....12159
114.....12162
116.....12159
160.....13084
161.....13084

10 CFR

50.....13615
55.....13615
73.....13615
Proposed Rules:
20.....13385

12 CFR

543.....12103
552.....12103
571.....12103
708a.....12759
Proposed Rules:
7.....11924
31.....11924
543.....13008
552.....13008
571.....13008
722.....13388

13 CFR

Proposed Rules:
120.....11941
122.....11941

14 CFR

11.....12034, 12108
25.....11194
39 .....11020, 11611, 11613, 11615, 11617, 11619, 11621, 11623, 12406, 12407, 12408, 12410, 12411, 12413, 12414, 12663, 12666, 13618, 13620, 13621, 13623, 13624
61.....11254
71 .....11625, 12108, 12667, 13626
91.....13627
95.....13035
97.....12109, 12110
121.....11194, 12034
135.....11194, 13010
1241.....11022
1262.....12668
Proposed Rules:
33.....12360
39 .....11635, 11637, 11942, 11944, 11945, 12714,
71.....11057
121.....13008, 13862
125.....13862
135.....13862

15 CFR

925 12592

Proposed Rules:

905 11947

16 CFR

Proposed Rules:

1700 12165

17 CFR

239 11876
270 ..... 11876, 11887
274 11876
400 11022
401 11022
402 ..... 11022, 12825
403 11022
404 11022
405 11022
450 11022

Proposed Rules:

239 11890
270 11890
274 11890

18 CFR

Proposed Rules:

154 13651
158 13651
201 13651
250 13651
284 13651

19 CFR

12 13352

20 CFR

Proposed Rules:

200 11639
404 12166
416 12166

21 CFR

173 11899
179 12669
328 13590
450 11026
510 11027
558 ..... 11027, 11028

Proposed Rules:

310 13014
314 13014

24 CFR

15 11901
25 13834
58 13518
92 13348
201 ..... 13834, 13854
202 13834
243 11828
290 11844
760 11828
813 11626
886 11844
888 12594
889 11828
890 ..... 11836, 13515
905 11626
908 11626
913 11626
3500 11194

Proposed Rules:

100 13840
888 11870

26 CFR

1 ..... 11028, 11906, 12415

Proposed Rules:

1 ..... 11059, 11060, 11195, 11950, 12034, 13213, 13393

28 CFR

0 11906
31 13330

29 CFR

1910 ..... 11194, 13782
1915 ..... 11194, 13782
1917 13782
1918 13782
1926 11194
1952 ..... 12416, 12417
2509 12328

Proposed Rules:

1952 12488

30 CFR

914 13038
936 13040
944 13367

Proposed Rules:

254 13652
VII 13858
756 13086
773 13087
925 11640

31 CFR

500 12885

32 CFR

199 12419

Proposed Rules:

199 12717
209 11642

33 CFR

100 11629
117 13629
143 13550
155 13318
157 13318
165 12112

Proposed Rules:

117 ..... 12178, 13393, 13395, 13653
320 13654
325 13654
333 13654
402 11643

34 CFR

3 11907
75 ..... 12096, 12648

36 CFR

7 13629

Proposed Rules:

7 13662

38 CFR

3 12886

39 CFR

3001 ..... 12113, 12116

Proposed Rules:

111 12490

40 CFR

9 12670
52 ..... 12121, 12123, 12125, 12438, 12442, 12446, 12451, 12453, 12459, 12685, 12688, 12691, 12695, 12700, 13042, 13631, 13634
58 11907
63 ..... 11029, 12670, 13045
70 ..... 12128, 12478, 13046
81 ..... 12453, 12459, 13368, 13634
180 ..... 11029, 11032, 12702, 12703, 12704, 12705, 12707
281 ..... 12630, 12709
282 12630
372 13047
721 11033

Proposed Rules:

50 13663
51 12492
52 ..... 12180, 12184, 12185, 12519, 12520, 12721, 12722
53 13663
58 12492
63 ..... 12723, 13088, 13664
68 13526
70 ..... 12521, 13088, 13683
81 12520
85 12185
148 11702
194 11060
261 12525
266 11702
268 11702
271 ..... 11702, 12525
302 12525
761 13095

42 CFR

485 11632
486 11632

Proposed Rules:

65a 12525

43 CFR

2720 12710

Public Land Orders:

7100 12592
7117 11045
7118 11046
7119 11633
7120 11633
7121 12886
7122 12887
7123 12887

44 CFR

65 13049
67 13050
152 11236

Proposed Rules:

67 13096

45 CFR

2543 13055

Proposed Rules:

1180 12186

46 CFR

2 13550
30 13318
32 13318
70 13318
90 13318
172 13318

Proposed Rules:

10 13570
12 13570
67 12188

47 CFR

1 13636
2 13071
5 13636
15 13071
32 12137
36 12137
61 13637
65 12137
73 ..... 11909, 11910, 11911

Proposed Rules:

Ch. I 13102
1 13396
2 ..... 11644, 13687
63 11644
64 12529
73 ..... 12530, 12724, 12725

48 CFR

2 ..... 12366, 12384, 13397
3 ..... 12366, 13397
4 ..... 12366, 12384
5 ..... 12366, 12384, 13397
6 ..... 12366, 13397
7 ..... 12384, 13397
8 ..... 12366, 12384
9 ..... 12366, 12384, 13397
10 13397
11 13397
12 ..... 12384, 13397
13 ..... 12366, 13397
14 ..... 12384, 13397
15 ..... 12366, 12384, 13397
16 ..... 12366, 12384, 13397
22 ..... 12366, 13397
23 ..... 12366, 13397
25 12366
27 12366
28 12366
29 12366
32 ..... 12366, 12384
36 ..... 12366, 13397
41 12366
42 ..... 12366, 13397
43 12366
44 ..... 12366, 13397
45 ..... 12366, 12384
46 ..... 12366, 13397
47 ..... 12366, 13397
49 ..... 12366, 13397
52 ..... 12366, 12384, 13397
53 ..... 12366, 12384, 13397
209 13073
219 13074
223 13075
235 13076
252 ..... 13073, 13075
701 ..... 11911, 12825
703 ..... 11911, 12825
715 ..... 11911, 12825
724 11911
731 ..... 11911, 12825
752 ..... 11911, 12825
927 11812
952 11812
970 11812
1517 12712
1837 11634
Ch. 99 12711

Proposed Rules:

Ch. I 11198
45 12530
52 12530

933.....11646
970.....11646
9904.....12725

49 CFR

1.....11046, 13639
107.....12139
218.....11047
382.....13369
391.....13369
393.....12146
571 .....11913, 13216, 13286, 13297, 13639
575.....11913
653.....12296
654.....12296, 12298
1312.....13077
1314.....13077

Proposed Rules:

234.....11649
393.....13306
571.....12192, 13688

50 CFR

17.....12483, 12887
204.....11050
611.....13780
646.....12592
651.....13078
663.....13377
675.....13780
676.....13780
681.....13380
672 .....11915, 12149, 12152, 13079
673.....11054, 12825
675 .....11915, 12149, 12487
676.....11916, 12152

Proposed Rules:

17 .....11768, 12531, 12728, 12730, 13105, 13397
222.....11951
663.....11062
672.....13106
675.....13106