3–16–95
Vol. 60 No. 51
Pages 14201–14350

federal register

Thursday
March 16, 1995

Briefings on How To Use the Federal Register
For information on briefings in Washington, DC, and Dallas, TX, see announcement on the inside cover of this issue.

FEDERAL REGISTER Published daily, Monday through Friday, (not published on Saturdays, Sundays, or on official holidays), by the Office of the Federal Register, National Archives and Records Administration, Washington, DC 20408, under the Federal Register Act (49 Stat. 500, as amended; 44 U.S.C. Ch. 15) and the regulations of the Administrative Committee of the Federal Register (1 CFR Ch. I). Distribution is made only by the Superintendent of Documents, U.S. Government Printing Office, Washington, DC 20402.

The **Federal Register** provides a uniform system for making available to the public regulations and legal notices issued by Federal agencies. These include Presidential proclamations and Executive Orders and Federal agency documents having general applicability and legal effect, documents required to be published by act of Congress and other Federal agency documents of public interest. Documents are on file for public inspection in the Office of the Federal Register the day before they are published, unless earlier filing is requested by the issuing agency.

The seal of the National Archives and Records Administration authenticates this issue of the **Federal Register** as the official serial publication established under the Federal Register Act. 44 U.S.C. 1507 provides that the contents of the **Federal Register** shall be judicially noticed.

The **Federal Register** is published in paper, 24x microfiche and as an online database through *GPO Access*, a service of the U.S. Government Printing Office. The online database is updated by 6 a.m. each day the **Federal Register** is published. The database includes both text and graphics from Volume 59, Number 1 (January 2, 1994) forward. It is available on a Wide Area Information Server (WAIS) through the Internet and via asynchronous dial-in. The annual subscription fee for a single workstation is $375. Six-month subscriptions are available for $200 and one month of access can be purchased for $35. Discounts are available for multiple-workstation subscriptions. To subscribe, Internet users should telnet to swais.access.gpo.gov and login as newuser (all lower case); no password is required. Dial-in users should use communications software and modem to call (202) 512–1661 and login as swais (all lower case); no password is required; at the second login prompt, login as newuser (all lower case); no password is required. Follow the instructions on the screen to register for a subscription for the **Federal Register** Online via *GPO Access.* For assistance, contact the *GPO Access* User Support Team by sending Internet e-mail to help@eids05.eids.gpo.gov, or a fax to (202) 512–1262, or by calling (202) 512–1530 between 7 a.m. and 5 p.m. Eastern time, Monday through Friday, except Federal holidays.

The annual subscription price for the **Federal Register** paper edition is $494, or $544 for a combined **Federal Register**, Federal Register Index and List of CFR Sections Affected (LSA) subscription; the microfiche edition of the **Federal Register** including the Federal Register Index and LSA is $433. Six month subscriptions are available for one-half the annual rate. The charge for individual copies in paper form is $8.00 for each issue, or $8.00 for each group of pages as actually bound; or $1.50 for each issue in microfiche form. All prices include regular domestic postage and handling. International customers please add 25% for foreign handling. Remit check or money order, made payable to the Superintendent of Documents, or charge to your GPO Deposit Account, VISA or MasterCard. Mail to: New Orders, Superintendent of Documents, P.O. Box 371954, Pittsburgh, PA 15250–7954.

There are no restrictions on the republication of material appearing in the **Federal Register.**

How To Cite This Publication: Use the volume number and the page number. Example: 60 FR 12345.

SUBSCRIPTIONS AND COPIES

PUBLIC

Subscriptions:

Paper or fiche	**202–512–1800**
Assistance with public subscriptions	**512–1806**

Online:

Telnet swais.access.gpo.gov, login as newuser <enter>, no password <enter>; or use a modem to call (202) 512–1661, login as swais, no password <enter>, at the second login as newuser <enter>, no password <enter>.

Assistance with online subscriptions	**202–512–1530**

Single copies/back copies:

Paper or fiche	**512–1800**
Assistance with public single copies	**512–1803**

FEDERAL AGENCIES

Subscriptions:

Paper or fiche	**523–5243**
Assistance with Federal agency subscriptions	**523–5243**

For other telephone numbers, see the Reader Aids section at the end of this issue.

THE FEDERAL REGISTER

WHAT IT IS AND HOW TO USE IT

FOR: Any person who uses the Federal Register and Code of Federal Regulations.

WHO: The Office of the Federal Register.

WHAT: Free public briefings (approximately 3 hours) to present:

1. The regulatory process, with a focus on the Federal Register system and the public's role in the development of regulations.
2. The relationship between the Federal Register and Code of Federal Regulations.
3. The important elements of typical Federal Register documents.
4. An introduction to the finding aids of the FR/CFR system.

WHY: To provide the public with access to information necessary to research Federal agency regulations which directly affect them. There will be no discussion of specific agency regulations.

WASHINGTON, DC

(THREE BRIEFINGS)

WHEN: March 23 at 9:00 am and 1:30 pm
April 20 at 9:00 am

WHERE: Office of the Federal Register Conference Room, 800 North Capitol Street NW., Washington, DC (3 blocks north of Union Station Metro)

RESERVATIONS: 202–523–4538

DALLAS, TX

WHEN: March 30 at 9:00 am

WHERE: Conference Room 7A23
Earle Cabell Federal Building
and Courthouse
1100 Commerce Street
Dallas, TX 75242

RESERVATIONS: 1–800–366–2998

Printed on recycled paper containing 100% post consumer waste

Contents

Federal Register

Vol. 60, No. 51

Thursday, March 16, 1995

Agriculture Department
See Animal and Plant Health Inspection Service
See Natural Resources Conservation Service
NOTICES
Agency information collection activities under OMB review, 14263

Animal and Plant Health Inspection Service
RULES
Plant-related quarantine, domestic:
Fruits and vegetables; importation, 14202–14209

Assassination Records Review Board
NOTICES
Meetings; Sunshine Act, 14330

Blackstone River Valley National Heritage Corridor Commission
NOTICES
Meetings; Sunshine Act, 14330

Coast Guard
RULES
Anchorage regulations:
Florida, 14220–14221
Drawbridge operations:
Louisiana, 14221
PROPOSED RULES
Ports and waterways safety:
East River, NY; safety zone, 14243–14245
Hempstead Harbor, NY; safety zone, 14245–14246
Port of New York and New Jersey; safety zone, 14242–14243, 14246–14247

Commerce Department
See International Trade Administration
See National Oceanic and Atmospheric Administration

Customs Service
RULES
North American Free Trade Agreement (NAFTA):
Test programs and procedures, 14211–14215
NOTICES
Meetings:
Automated export system development, 14324–14325

Defense Department
PROPOSED RULES
Federal Acquisition Regulation (FAR):
Special contracting methods, 14340–14346
Task and delivery order contracts, 14346–14349
NOTICES
Meetings:
Dependents' Education Advisory Council, 14272
Semiconductor Technology Council, 14271–14272
Women in Services Advisory Committee, 14272–14273
Privacy Act:
Systems of records, 14273–14274

Delaware River Basin Commission
NOTICES
Hearings, 14274–14275

Drug Enforcement Administration
NOTICES
Applications, hearings, determinations, etc.:
Zadrozxy, Joseph A., M.D., 14304

Energy Department
See Federal Energy Regulatory Commission
NOTICES
Environmental statements; availability, etc.:
Waste management programmatic environmental impact statement, 14275
Grant and cooperative agreement awards:
New Jersey Institute of Technology, The Foundation, 14275–14276

Environmental Protection Agency
RULES
Hazardous waste:
State underground storage tank program approvals—South Dakota, 14334–14337
NOTICES
Grants, State and local assistance:
Environmental justice community/University partnership program, 14281–14285

Executive Office of the President
See Trade Representative, Office of United States

Federal Aviation Administration
PROPOSED RULES
Airworthiness directives:
Boeing, 14233–14235
Fairchild, 14235–14236
Jetstream, 14237–14238
Learjet, 14231–14233
Class D airspace, 14240–14241
Class D and E airspace, 14238–14240
NOTICES
Airport noise comparability program:
Noise exposure map—
Fort Lauderdale Executive Airport, FL, 14315–14316
Meetings:
Aviation Rulemaking Advisory Committee; correction, 14316
Passenger facility charges; applications, etc.:
Lebanon Municipal Airport, 14316–14317

Federal Communications Commission
RULES
Radio broadcasting:
Experimental, auxiliary, and special broadcast and other program distributional services—
Aural broadcast auxiliary stations, 14224–14225

Federal Deposit Insurance Corporation
NOTICES
Agency information collection activities under OMB review, 14285

Federal Election Commission
NOTICES
Meetings; Sunshine Act, 14330

Federal Energy Regulatory Commission
NOTICES
Electric rate and corporate regulation filings:
Louisville Gas & Electric Co. et al., 14277–14279
Environmental statements; availability, etc.:
FORIA Hydro Corp., 14279
Natural Gas Pipeline Co. of America, 14279–14281
Natural gas pipeline; alternatives to traditional cost-of-service rulemaking criteria, 14281
Applications, hearings, determinations, etc.:
Pacific Gas Transmission Co., 14276–14277

Federal Highway Administration
NOTICES
Environmental statements; notice of intent:
Snohomish County, WA, 14317–14318

Federal Labor Relations Authority
NOTICES
Federal service labor-management relations statute:
Collective bargaining; comment solicitation for policy statement, 14285–14286

Federal Reserve System
NOTICES
Applications, hearings, determinations, etc.:
First Security Bancorp et al., 14286

Federal Trade Commission
RULES
Appliances, consumer; energy costs and consumption information in labeling and advertising:
Comparability ranges—
Showerheads and faucets, 14209–14211

Fish and Wildlife Service
PROPOSED RULES
Endangered and threatened species:
Contra Costa goldfields, etc. (four plants from Northern California), 14253
NOTICES
Endangered and threatened species permit applications, 14301–14302
Environmental statements; availability, etc.:
Incidental take permits—
Travis County, TX; golden-cheeked warbler, 14302–14303

Food and Drug Administration
RULES
Animal drugs, feeds, and related products:
Lincomycin hydrochloride soluble powder, 14216–14217
Neomycin sulfate soluble powder, 14217
Oxytetracycline injection, 14217–14218
Sponsor name and address changes—
Sandoz Agro, Inc., 14216
NOTICES
Food additive petitions:
Chemie Research & Manufacturing Co., Inc., 14286–14287
Food for human consumption:
Food Chemicals Codex; 3d Edition—
New monographs and revisions, 14287–14289
Human drugs:
New drug applications—
Dey Laboratories et al.; approval withdrawn, 14289
Meetings:
Advisory committees, panels, etc., 14289–14291

General Services Administration
PROPOSED RULES
Federal Acquisition Regulation (FAR):
Special contracting methods, 14340–14346
Task and delivery order contracts, 14346–14349

Health and Human Services Department
See Food and Drug Administration
See Health Care Financing Administration
See National Institutes of Health
See Social Security Administration
NOTICES
Scientific misconduct findings; administrative actions:
Tanner, Vivian N.; correction, 14291

Health Care Financing Administration
RULES
Medicare:
Screening mammography services coverage; correction, 14223–14224

Housing and Urban Development Department
NOTICES
Grants and cooperative agreements; availability, etc.:
Community development block grant program—
Indian tribes and Alaskan Native villages, 14293–14294
Organization, functions, and authority delegations:
Assistant Secretary for Community Planning and Development et al.; supersedure and redelegation of authority, 14295–14296
Assistant Secretary for Fair Housing and Equal Opportunity, 14294–14295

Interior Department
See Fish and Wildlife Service
See Land Management Bureau

Internal Revenue Service
NOTICES
Meetings:
Art Advisory Panel, 14325

International Trade Administration
NOTICES
Antidumping:
Disposable pocket lighters from—
Thailand, 14263–14270

International Trade Commission
NOTICES
Meetings; Sunshine Act, 14330

Interstate Commerce Commission
NOTICES
Railroad operation, acquisition, construction, etc.:
Indiana & Ohio Central Railroad Co., Inc., 14303–14304

Justice Department
See Drug Enforcement Administration
NOTICES
Pollution control; consent judgments:
Missouri Electric Works, Inc., et al., 14305
New Bedford, MA, 14304–14305

Labor Department
See Occupational Safety and Health Administration

NOTICES
Glass Ceiling Commission; National Award for Diversity and Excellence in American Executive Management; application procedure
[**Editorial Note:** This is the correct index entry for the notice document printed in the **Federal Register** of Thursday, March 9, 1995.]

Land Management Bureau
NOTICES
Realty actions; sales, leases, etc.:
Montana, 14298
Nevada, 14296–14297
Utah, 14297–14298
Recreation management plans, etc.:
Cape Blanco Lighthouse site, OR, 14298
Recreation management restrictions, etc.:
Yuba Reservoir Recreation Management Area, UT, 14298–14300
Survey plat filings:
Colorado, 14300

National Aeronautics and Space Administration
PROPOSED RULES
Federal Acquisition Regulation (FAR):
Special contracting methods, 14340–14346
Task and delivery order contracts, 14346–14349

National Highway Traffic Safety Administration
RULES
Motor vehicle content labeling; passenger cars and light vehicles; domestic and foreign content information, 14228–14229
Motor vehicle safety standards:
Lamps, reflective devices, and associated equipment—
Replaceable light source information, 14226–14228
PROPOSED RULES
Motor vehicle safety standards:
Lamps, reflective devices, and associated equipment—
Headlamps, dimensional and specification information, transfer to Docket No. 93–11, 14247–14252
NOTICES
Motor vehicle safety standards:
Nonconforming vehicles—
Annual list; correction, 14319
Importation eligibility; determinations, 14318–14320
Omnibus Transportation Employee Testing Act of 1991:
Devices to measure breath alcohol; model specifications; correction, 14320–14322

National Institutes of Health
NOTICES
Meetings:
Alternative Medicine Program Advisory Council, 14292
Research Grants Division special emphasis panel, 14291–14292

National Oceanic and Atmospheric Administration
RULES
Fishery conservation and management:
Summer flounder, 14230
PROPOSED RULES
Endangered and threatened species:
Southern Oregon and Northern California steelhead, 14253–14261
Fishery conservation and management:
American lobster, 14261–14262
Ocean and coastal resource management:
Monterey Bay National Marine Sanctuary, CA—
Shark attraction by chum or other means; restriction or prohibition; public hearing, 14241
NOTICES
Permits:
Marine mammals, 14270–14271

National Science Foundation
NOTICES
Meetings:
Advanced Scientific Computing Special Emphasis Panel, 14306–14307
Biochemistry and Molecular Structure and Function Advisory Panel, 14307
Ecological Studies Advisory Panel, 14307–14308
Federal Networking Council Advisory Committee, 14306
Information, Robotics and Intelligent Systems Special Emphasis Panel, 14306
Mathematical Sciences Special Emphasis Panel, 14305
Physiology and Behavior Advisory Panel, 14307
Polar Programs Advisory Committee, 14306–14307
Systemic Reform Special Emphasis Panel, 14305–14307
Undergraduate Education Special Emphasis Panel, 14306
Meetings; Sunshine Act, 14330–14331

Natural Resources Conservation Service
NOTICES
Environmental statements; availability, etc.:
Bear Creek Watershed, OR, 14263

Nuclear Regulatory Commission
NOTICES
Applications, hearings, determinations, etc.:
Consolidated Edison Co. of New York, Inc., 14308–14309

Occupational Safety and Health Administration
RULES
Shipyard employment safety and health standards:
Confined and enclosed spaces and other dangerous atmospheres; correction, 14218–14220

Office of United States Trade Representative
See Trade Representative, Office of United States

Personnel Management Office
RULES
Retirement:
Civil Service Retirement System and Federal Employees Retirement System—
Survivor annuity entitlement based on remarriage before age 55; termination, 14201–14202

Public Health Service
See Food and Drug Administration
See National Institutes of Health

Railroad Retirement Board
PROPOSED RULES
Railroad Unemployment Insurance Act:
Sickness benefits, 14241–14242
NOTICES
Agency information collection activities under OMB review, 14309–14310

Research and Special Programs Administration
NOTICES
Hazardous materials:
Applications; exemptions, renewals, etc., 14322–14324

Securities and Exchange Commission
NOTICES
Self-regulatory organizations; proposed rule changes:
Municipal Securities Rulemaking Board, 14313–14314
National Association of Securities Dealers, Inc., 14310–14313
Applications, hearings, determinations, etc.:
Public utility holding company filings, 14314–14315
Voltaire Capital, Inc., 14314

Social Security Administration
RULES
Supplemental security income and social security benefits:
Aged, blind, and disabled—
Benefit continuation and special eligibility for severely impaired recipients who work; mass change resulting in reduction, suspension, etc.; corrections, 14215–14216

State Department
NOTICES
Meetings:
Fine Arts Committee, 14315

Thrift Supervision Office
NOTICES
Receiver appointments:
Carteret Federal Savings Bank, 14325

Trade Representative, Office of United States
NOTICES
General Agreement on Trade in Services (GATS), telecommunications negotiations; comment request, 14329
Meetings:
Defense Policy Advisory Committee for Trade, 14329

Transportation Department
See Coast Guard
See Federal Aviation Administration
See Federal Highway Administration
See National Highway Traffic Safety Administration
See Research and Special Programs Administration
RULES
Organization, functions, and authority delegations:
Administrators, 14225–14226

Treasury Department
See Customs Service
See Internal Revenue Service
See Thrift Supervision Office

United States Information Agency
NOTICES
Grants and cooperative agreements; availability, etc.:
Africa; radio station owners and managers; professional development, 14325–14329

Veterans Affairs Department
RULES
Adjudication; pensions, compensation, dependency, etc.:
Disability resulting from hospitalization, treatment, examination, or vocational rehabilitation; compensation, 14222–14223

Separate Parts In This Issue

Part II
Environmental Protection Agency, 14334–14337

Part III
Department of Defense, General Services Administration, and National Aeronautics and Space Administration, 14340–14349

Reader Aids
Additional information, including a list of public laws, telephone numbers, and finding aids, appears in the Reader Aids section at the end of this issue.

Electronic Bulletin Board
Free **Electronic Bulletin Board** service for Public Law numbers, **Federal Register** finding aids, and a list of documents on public inspection is available on 202–275–1538 or 275–0920.

CFR PARTS AFFECTED IN THIS ISSUE

A cumulative list of the parts affected this month can be found in the Reader Aids section at the end of this issue.

5 CFR
831.....14201
842.....14201

7 CFR
300.....14202
319.....14202

14 CFR
Proposed Rules:
39 (4 documents) 14231, 14233, 14235, 14237
71 (2 documents) 14238, 14240

15 CFR
Proposed Rules:
944.....14241

16 CFR
305.....14209

19 CFR
101.....14211

20 CFR
416.....14215
Proposed Rules:
335.....14241

21 CFR
510.....14216
520 (2 documents) 14216, 14217
522.....14217

29 CFR
1915.....14218

33 CFR
110.....14220
117.....14221
Proposed Rules:
165 (4 documents) 14242, 14243, 14245, 14246

38 CFR
3.....14222

40 CFR
281.....14334
282.....14334

42 CFR
410.....14223

47 CFR
74.....14224

48 CFR
Proposed Rules:
1.....14340
6.....14346
7.....14340
16.....14346
17.....14340
37.....14340
49.....14340
52 (2 documents) 14340, 14346

49 CFR
1.....14225
564.....14226
583.....14228
Proposed Rules:
564.....14247
571.....14247

50 CFR
625.....14230
Proposed Rules:
17.....14253
227.....14253
649.....14261

Rules and Regulations

Federal Register
Vol. 60, No. 51
Thursday, March 16, 1995

This section of the FEDERAL REGISTER contains regulatory documents having general applicability and legal effect, most of which are keyed to and codified in the Code of Federal Regulations, which is published under 50 titles pursuant to 44 U.S.C. 1510.

The Code of Federal Regulations is sold by the Superintendent of Documents. Prices of new books are listed in the first FEDERAL REGISTER issue of each week.

OFFICE OF PERSONNEL MANAGEMENT

5 CFR Parts 831 and 842

RIN 3206–AG10

Termination of Survivor Annuity Entitlement Based on Remarriage Before Age 55

AGENCY: Office of Personnel Management.

ACTION: Final rule.

SUMMARY: The Office of Personnel Management (OPM) is issuing final regulations concerning survivor annuity entitlement under the Civil Service Retirement System and Federal Employees Retirement System. The regulations facilitate qualification for a current spouse survivor annuity in certain cases involving a former spouse's remarriage to a retiree. The regulations also limit the scope of the current regulations prohibiting reinstatement of a former spouse survivor annuity after an annulment. The regulations are necessary to implement the basic purpose of the statute.

EFFECTIVE DATE: April 17, 1995.

FOR FURTHER INFORMATION CONTACT: Harold L. Siegelman, (202) 606–0299.

SUPPLEMENTARY INFORMATION: On August 15, 1994, we published (at 59 FR 41716) proposed regulations to facilitate qualification for a current spouse survivor annuity in certain cases involving a former spouse's remarriage to a retiree and to limit the scope of the current regulations prohibiting reinstatement of a former spouse survivor annuity after an annulment. We received one comment that relates to the former spouse annulment issue. We address the comment in our discussion of that issue.

Under sections 8341(h)(3)(B) and 8445(c)(2) of title 5, United States Code, a former spouse's survivor annuity entitlement terminates if the former spouse remarries before age 55. In a recent case, a retiree's former spouse was eligible for a survivor annuity, but she remarried the retiree before she reached age 55. They remarried to make sure the former spouse would get a survivor annuity. The retiree died 1 month after the remarriage without notifying OPM and the survivor reduction in the retiree's annuity continued until his death. The retiree, assuming the remarriage would assure his wife's future, died without having filed a written election to provide a survivor annuity for her. (*See* 5 U.S.C. 8339(j)(5)(B) and 8419(b)(2)(C).) In our adjudication of this case, we decided to construe the statute so that the widow's pre-age 55 remarriage to the retiree under these circumstances does not disqualify her. To interpret the law to prevent her from receiving a survivor annuity would produce an unconscionable result that Congress never intended. Accordingly, we decided to issue regulations to adopt a more reasonable approach to this situation. Under these regulations, when a retiree remarries a former spouse who would be entitled, if not for the remarriage, to a former spouse survivor annuity based on the retiree's service, and the retiree takes no action to terminate the annuity reduction, we will deem the retiree to have elected to continue the reduction to provide a current spouse annuity under section 8339(j)(5)(B)(iii) or section 8419(b)(2)(C) of title 5, United States Code. We will deem the election to have occurred whether the former spouse's entitlement was based on the retiree's election or on a court order. Of course, an election will not be deemed if the retiree, in writing, asks OPM to stop the reduction either before or after the remarriage.

The new regulations also clarify the scope of the current regulations concerning reinstatement of a former spouse survivor annuity entitlement after an annulment. Our current regulations provide that a former spouse's entitlement will not be reinstated even if it ended due to a remarriage that is later determined to be invalid and is annulled. The comment that we received on the proposed regulations expressed the belief that, when a void marriage is annulled *ab initio,* we should act as though the marriage never occurred.

The rationale for our approach is based on the State courts' treatment of remarriage for alimony purposes. Generally, the courts will not allow alimony to be reinstated when the remarriage is annulled because the payer of the alimony is allowed to rely on the act of remarriage (regardless of validity) to plan for the future without the alimony obligation. *See* 55 FR 9094, March 12, 1990 (addressing similar comments in connection with the original issuance of the current regulation). The only purpose of our proposed rule was to clarify that the current regulation does not apply to a very small class of cases for which the alimony analogy is inapposite.

Our alimony analogy does not fit cases in which the former spouse's entitlement is not related to any reduction in the retiree's annuity. Section 4(b)(1)(B) and 4(b)(4) of the Civil Service Retirement Spouse Equity Act of 1984, as amended, provide survivor annuity benefits to former spouses who meet certain criteria, without requiring a reduction in a retiree's benefit. We proposed and are now amending section 831.644(d) of Title 5, Code of Federal Regulations, to allow reinstatement of entitlements based on section 4(b)(1)(B) and 4(b)(4) of the Civil Service Retirement Spouse Equity Act of 1984, as amended, if the remarriage before age 55 is later found to be invalid from its inception. The alimony analogy continues to fit—and therefore we will not reinstate the former spouse's entitlement following an annulment—in any situation in which a reduction in the employee annuity is required to provide the former spouse survivor annuity.

Regulatory Flexibility Act

I certify that this regulation will not have a significant economic impact on a substantial number of small entities because the regulation will only affect Federal agencies and retirement payments to retired Government employees, spouses, and former spouses.

List of Subjects in 5 CFR Parts 831 and 842

Administrative practice and procedure, Air traffic controllers, Claims, Disability benefits, Firefighters, Government employees, Income taxes,

Intergovernmental relations, Law enforcement officers, Pensions, Reporting and recordkeeping requirements, Retirement.

U.S. Office of Personnel Management.

Lorraine A. Green,

Deputy Director.

Accordingly, OPM is amending subpart F of 5 CFR part 831 and subpart F of 5 CFR part 842, as follows:

PART 831—RETIREMENT

1. The authority citation for part 831 continues to read as follows:

Authority: 5 U.S.C. 8347; § 831.102 also issued under 5 U.S.C. 8334; § 831.106 also issued under 5 U.S.C. 552a; § 831.108 also issued under 5 U.S.C. 8336(d)(2); § 831.201(b)(6) also issued under 5 U.S.C. 7701(b)(2); § 831.204 also issued under section 7202(m)(2) of the Omnibus Budget Reconciliation Act of 1990, Pub. L. 105–508, 104 Stat. 1388–339; § 831.303 also issued under 5 U.S.C. 8334(d)(2); § 831.502 also issued under 5 U.S.C. 8337; § 831.502 also issued under section 1(3), E.O. 11228, 3 CFR 1964–1965 Comp.; § 831.621 also issued under section 201(d) of the Federal Employees Benefits Improvement Act of 1986, Pub. L. 99–251, 100 Stat. 23; subpart S also issued under 5 U.S.C. 834(k); subpart V also issued under 5 U.S.C. 8343a and section 6001 of the Omnibus Budget Reconciliation Act of 1987, Pub. L. 100–203, 101 Stat. 1330–275; § 831.2203 also issued under section 7001(a)(4) of the Omnibus Budget Reconciliation Act of 1990, Pub. L. 101–508; 104 Stat. 1388–328.

Subpart F—Survivor Annuities

2. In section 831.644, paragraph (d) is revised to read as follows:

§ 831.644 Remarriage.

* * * * *

(d) (1) If present or future entitlement to a former spouse annuity is terminated because of remarriage before age 55, the entitlement will not be reinstated upon termination of the remarriage by death or divorce.

(2) If present or future entitlement to a former spouse annuity is terminated because of remarriage before age 55, the entitlement will not be reinstated upon annulment of the remarriage unless—

(i) The decree of annulment states that the marriage is without legal effect retroactively from the marriage's inception; and

(ii) The former spouse's entitlement is based on section 4(b)(1)(B) or section (4)(b)(4) of Pub. L. 98–615.

(3) If a retiree who is receiving a reduced annuity to provide a former spouse annuity and who has remarried that former spouse (before the former spouse attained age 55) dies, the retiree will be deemed to have elected to continue the reduction to provide a current spouse annuity unless the retiree requests (or has requested) in writing that OPM terminate the reduction.

PART 842—FEDERAL EMPLOYEES RETIREMENT SYSTEM—BASIC ANNUITY

3. The authority citation for part 842 continues to read as follows:

Authority: 5 U.S.C. 8461(g); §§ 842.104 and 842.106 also issued under 5 U.S.C. 8461(n); § 842.105 also issued under 5 U.S.C. 8402(c)(1) and 7701(b)(2); § 842.106 also issued under section 7202(m)(2) of the Omnibus Budget Reconciliation Act of 1990, Pub. L. 101–508 and 5 U.S.C. 8402(c)(1); §§ 842.604 and 842.611 also issued under 5 U.S.C. 8417; § 842.607 also issued under 5 U.S.C. 8416 and 8417; § 842.614 also issued under 5 U.S.C. 8419; § 842.615 also issued under 5 U.S.C. 8418; § 842.703 also issued under section 7001(a)(4) of the Omnibus Budget Reconciliation Act of 1990, Pub. L. 101–508; § 842.707 also issued under section 6001 of the Omnibus Budget Reconciliation Act of 1987, Pub. L. 100–203; § 842.708 also issued under section 4005 of the Omnibus Budget Reconciliation Act of 1989, Pub. L. 101–239 and section 7001 of the Omnibus Budget Reconciliation Act of 1990, Pub. L. 101–508; subpart H also issued under 5 U.S.C. 1104.

Subpart F—Survivor Elections

4. In section 842.612, paragraph (h) is added to read as follows:

§ 842.612 Post-retirement election of a fully reduced annuity or one-half reduced annuity to provide a current spouse annuity.

* * * * *

(h) If a retiree who is receiving a reduced annuity to provide a former spouse annuity and who has remarried that former spouse (before the former spouse attained age 55) dies, the retiree will be deemed to have elected to continue the reduction to provide a current spouse annuity unless the retiree requests (or has requested) in writing that OPM terminate the reduction.

[FR Doc. 95–6508 Filed 3–15–95; 8:45 am]

BILLING CODE 6325–01–M

DEPARTMENT OF AGRICULTURE

Animal and Plant Health Inspection Service

7 CFR Parts 300 and 319

[Docket No. 94–036–2]

Importation of Fruits and Vegetables

AGENCY: Animal and Plant Health Inspection Service, USDA.

ACTION: Final rule.

SUMMARY: We are allowing a number of previously prohibited fruits and vegetables to be imported into the United States from certain parts of the world. All of the fruits and vegetables, as a condition of entry, will be subject to inspection, disinfection, or both, at the port of first arrival as may be required by a U.S. Department of Agriculture inspector. In addition, some of the fruits and vegetables will be required to undergo prescribed treatments for fruit flies or other injurious insects as a condition of entry, or to meet other special conditions. This action will provide the United States with additional kinds and sources of fruits and vegetables while continuing to provide protection against the introduction and dissemination of injurious plant pests by imported fruits and vegetables.

EFFECTIVE DATE: March 16, 1995.

FOR FURTHER INFORMATION CONTACT: Mr. Frank E. Cooper or Mr. Peter Grosser, Senior Operations Officers, Animal and Plant Health Inspection Service, Plant Protection and Quarantine, Port Operations, 4700 River Road Unit 139, Riverdale, Maryland 20737–1228; (301) 734–8645.

SUPPLEMENTARY INFORMATION:

Background

The regulations in 7 CFR 319.56 through 319.56–8 (referred to below as the regulations) prohibit or restrict the importation of fruits and vegetables into the United States from certain parts of the world to prevent the introduction and dissemination of injurious insects that are new to or not widely distributed within and throughout the United States.

On October 25, 1994, we published in the **Federal Register** (59 FR 53606–53612, Docket No. 94–036–1) a proposal to amend the regulations by allowing additional fruits and vegetables to be imported into the United States from certain parts of the world under specified conditions. The importation of these fruits and vegetables had been prohibited because of the risk that the

fruits and vegetables could introduce injurious insects into the United States. We proposed to allow these importations at the request of various importers and foreign ministries of agriculture, and after conducting pest risk analyses that indicated that the fruits or vegetables could be imported under certain conditions without significant pest risk.

We solicited comments concerning our proposal for 30 days ending November 25, 1994. We received nine comments by that date. They were from industry representatives and growers, State departments of agriculture, an academic institution, a foreign department of agriculture, and a foreign ambassador. One comment supported the proposal as written. One commenter was concerned about being able to move fruits and vegetables from Puerto Rico into other parts of the United States. The remainder of the commenters opposed the rule for specific fruits or vegetables. We carefully considered all of the comments we received. They are discussed below by topic.

Carambola From Taiwan

We proposed to amend § 319.56–2x to allow the importation of carambola from Taiwan. We specified that carambola would undergo cold treatment for the Oriental fruit fly (*Bactrocera dorsalis*) in accordance with the Plant Protection and Quarantine (PPQ) Treatment Manual, which has been incorporated by reference into the Code of Federal Regulations at 7 CFR 300.1. In accordance with § 319.56–6 of the regulations, carambola would be subject to inspection, disinfection, or both at the port of first arrival. As discussed in the proposal, the pest risk assessment conducted by the Animal and Plant Health Inspection Service (APHIS) determined that any injurious plant pests that might be carried by carambola would be readily detectable by an inspector.

Several commenters expressed concerns about the economic analysis in the Initial Regulatory Flexibility Analysis. These comments are addressed in the Final Regulatory Flexibility Analysis.

One commenter was concerned about U.S. producers' ability to export carambola to the Taiwanese market. Our proposal and decision to allow importation of carambola from Taiwan, as well as other fruits and vegetables, are based solely on whether these importations can be made without significant risk of pest introduction. We have no authority to limit importations based on the presence or absence of reciprocal arrangements. Therefore, we have made no change based on this comment.

Two commenters expressed concern that Taiwanese producers use pesticides which are illegal in the United States. The Food and Drug Administration takes samples of imported commodities to determine whether illegal pesticides are present, and seizes shipments that do not meet its standards. Therefore, we have made no change based on this comment.

One commenter stated that there was no mention of the certification procedures to ensure fruits are treated properly and not infested with the Oriental fruit fly, *Bactrocera dorsalis*. We ensure the fruits are treated properly by verifying the results of treatment in accordance with the PPQ Treatment Manual. Cold treatments, as required for carambola from Taiwan, may be conducted either in the country of origin or in the United States, under an inspector's supervision. Treatments may also be conducted on board vessels en route to the United States. In this case, a sealed temperature recording device is read by an inspector upon the fruit's arrival in the United States, and the fruit is released from treatment only if the temperature record indicates the required cold treatment has been successfully completed.

Several commenters stated concerns about the fruit piercing moth (*Othreis* spp.) and fruit borer (*Eucosma notanthes*), which attack carambola. They questioned whether cold or other treatments would kill these pests and raised concerns about the effectiveness of the Taiwanese practice of covering the fruit with pesticide impregnated bags to manage these pests. One commenter felt that there was no way to ensure that all fruit imported into the United States had been bagged in the field. Another commenter felt that there was no guarantee that shipments of carambola from Taiwan would be free of larvae or eggs of the *Eucosma* or that the young larvae in the fruit would have caused sufficient damage for an inspector to detect. Commenters expressed concerns that these pests, if introduced into the United States, could feed on related fruits and become a significant problem for carambola and other crops in Florida.

The fruit borer, *Eucosma notanthes*, is recognized as a pest of carambola. However, routine cultural practices for carambola production in Taiwan, such as the bagging of fruit, provide deterrents against the carambola becoming infested with these pests. In addition, the following pest management activities are carried out to reduce the risk posed by this insect: Pesticides are applied weekly, from the end of the bloom season until the fruit measures 5 cm in length. Infestation in young fruit results in premature fruit drop. The dropped fruit is collected and destroyed, reducing pest pressure and risk. Fruits are then bagged to prevent adult moths from laying eggs on the growing fruit. APHIS representatives will schedule periodic visits to carambola production areas in Taiwan to monitor these procedures. If an adult moth circumvents the bagging and lays eggs on more mature fruits, the action of the larvae boring into the fruit extrudes frass from the hole as well as exudate from the fruit. These obvious symptoms enhance our confidence in our being able to visually detect any fruit that may be infested.

Bagging fruits to prevent insects from laying their eggs on or in the fruit, and subsequent larval forms boring into the fruit, has proven successful with similar pests and imports of sand pears from Japan and the Republic of Korea. The bagging will also exclude other moths, including *Othreis* spp.

We consider the measures taken in the exporting country, coupled with the safeguards required by the regulations, including inspection and cold treatment, to be adequate to prevent the introduction of injurious plant pests into the United States by carambola from Taiwan. Therefore, we are not making any changes based on these comments.

Onion Bulbs From Indonesia

We proposed to amend § 319.56–2t to allow the importation of onion bulbs, *Allium cepa*, from Indonesia. One commenter stated that onion bulbs from Indonesia should not be allowed entry with the tops due to the risk of introduction of the listed leafminer and noctuids. We are making no change based on this comment, because, as indicated in the proposal, only bulbs of the onion will be allowed. Bulbs with tops will be refused entry.

Jicama From Tonga

We proposed to amend § 319.56–2t to allow the importation of Jicama, *Pachyrhizus tuberous*, from Tonga. One commenter felt that jicama from Tonga should not be admitted until the nematodes mentioned in the pest risk assessment are identified and their impact evaluated. We are making no change based on this comment. The pest risk assessment reported on two root-knot nematodes on this host. As the name implies, attacks by species within this genus result in a root-knot forming on the host material. In general, these are predictable visible symptoms that

inspectors are trained to look for, and APHIS inspects jicama for these nematodes. If these nematodes are detected at the time of importation, the jicama will be rejected.

Currant and Gooseberry, From Argentina and Australia

We proposed to amend § 319.56–2t to allow the importation of currant and gooseberry, *Ribes* spp., from Argentina and Australia. One commenter felt that *Ribes* spp. fruits could harbor the mites that vector the reversion disease, even though the fruit would not carry the pathogen for the disease. The commenter recommended that surface treatment should be required to allow entry for these fruits. We are making no change based on this comment. The reversion disease is not known to occur in Argentina or Australia. Therefore, we believe there is no risk of mites serving as vectors.

White Asparagus From Austria

We proposed to amend § 319.56–2t to allow the importation of white asparagus, *Asparagus officinalis*, from Austria. As specified in the proposal, the only plant part eligible for importation is the shoot, with no visible green on the shoot. One commenter suggested that white asparagus from Austria should be harvested before shoot emergence and washed to eliminate soil. We are making no changes based on this comment. If the asparagus is harvested after shoot emergence, it will not be white, and, therefore, will not be enterable. We will reject all shipments that are not white. In accordance with 7 CFR 330.300, soil contamination is a reason for rejecting shipments of all agricultural products from nearly all countries. Therefore, the asparagus shoots must be completely white and free of soil when presented for inspection and entry.

Sage From Belize

We proposed to amend § 319.56–2t to allow the importation of sage, *Salvia*, from Belize. In accordance with § 319.56–6 of the regulations, sage would be subject to inspection, disinfection, or both at the port of first arrival. As discussed in the proposal, the pest risk assessment conducted by APHIS determined that sage from Belize is not attacked by fruit flies or other injurious plant pests. In addition, any other injurious plant pests that might be carried by sage from Belize would be readily detectable by an inspector.

One commenter was concerned about the rust pathogens in Central America. The commenter questioned the status of rust pathogens in Belize. We have no evidence that any of these rust pathogens occur in Belize. In addition, our experience with *Salvia* imports from countries where these rust pathogens occur has not demonstrated that imported *Salvia* serves as a pathway.

Blueberry From Argentina

We proposed to amend § 319.56–2t to allow the importation of blueberry, *Vaccinium* spp., from Argentina. We specified that blueberries will undergo cold treatment for the Mediterranean fruit fly (*Ceratitis capitata*) in accordance with the PPQ Treatment Manual.

One commenter suggested that fumigation schedules for *Vaccinium* spp. fruit from Argentina should target *Anastrepha* spp., which has been intercepted on *Vaccinium* spp. in Mexico. We are making no changes based on this comment. Although it is true that a fruit fly of an *Anastrepha* sp. was found in blueberry fruit, the fruit was carried by an airline passenger and is the only record we have of an interception of this species in blueberry fruit. This information was weighed against the larger body of information of repeated commercial importation without any evidence of *Anastrepha* infestation. We believe the interception represented an aberration or incidental report from a possible over-ripe or damaged fruit.

Kiwi From the Republic of Korea

We proposed to amend § 319.56–2t to allow the importation of kiwi, *Actinidia deliciosa*, from the Republic of Korea. One commenter was concerned by the lack of reciprocal commitment from the Republic of Korea to treat California kiwifruit exported to the Republic of Korea fairly in the context of phytosanitary and food issues.

Our proposal and decision to allow importation of kiwi from the Republic of Korea, as well as other fruits and vegetables, are based solely on whether these importations can be made without significant risk of pest introduction. We have no authority to limit importations based on the presence or absence of reciprocal arrangements.

Inspection Upon Arrival

One commenter questioned the ability of inspectors to adequately inspect the increasing number of commodities that arrive in the United States. Inspection at the port of first arrival is only one aspect of our approach to plant pest exclusion, and is never the sole means of plant pest exclusion for any commodity. Before a fruit or vegetable is approved for importation into the United States, a plant pest risk assessment is conducted for the commodity. If a plant pest risk is found to be associated with a commodity proposed for importation, APHIS then determines what, if any, measures can be taken to reduce the risk to a level that would allow the commodity to be safely imported into the United States. For example, in certain cases our regulations impose restrictions such as specific growing and shipping requirements or inspection in the country of origin, or treatment. As a final precaution, all fruits and vegetables are subject to inspection at the port of first arrival. Inspectors are aware of potential pest risks associated with a particular commodity and conduct their inspections accordingly. We consider the measures taken in the exporting countries, coupled with the safeguards required by the regulations, including inspection, to be adequate to prevent the introduction of injurious plant pests into the United States.

General

One commenter stated that pest risk assessments consist only of a cursory look at the interception histories of commodities which are currently prohibited and do not adequately investigate pest problems associated with the commodities in their countries of origin. We do investigate pest problems associated with commodities in their countries of origin during our pest risk assessments. Our current method of performing pest risk assessments is to do an exhaustive search of literature and review our historical plant pest database and interception information. When available, we also use information from other sources, and occasionally conduct on-site investigations in proposed export areas. The pest risk assessments are largely dependent upon literature on plant pest problems in countries of origin. This literature is primarily investigative findings published by scientific communities. Our experience has shown that if a pest causes damage to an economic crop, the scientific community investigates the pest's biology and extent of pest damage in prescribing remedial actions.

One commenter felt that commodities that can be planted or otherwise propagated, such as onion and shallot bulbs, cornsalad, and jicama, should be evaluated by stricter criteria. We are making no change based on this comment. We have long recognized that some products imported for consumption are capable of being propagated and that individuals, occasionally out of curiosity, may plant them. While we do not believe that the extent of the practice makes it a

significant pest risk, we have, in the past, explored three ways of preventing the practice: (1) Prohibit the importation of all commodities that could potentially be propagated; (2) treat all commodities capable of propagation with sprout inhibitor; or (3) devitalize the products prior to export. We believe that the first option, prohibition, should be applied only to products that present pest risks that cannot be mitigated in other ways. We have experimented with the second option, using sprout inhibitors, but they do not offer sufficient quarantine security for high-risk products and are not registered for most products. The third option, devitalization, in most cases renders a product unacceptable for the fresh fruit and vegetable market.

Countries are becoming more and more sophisticated in their production and phytosanitary practices, so the quality of fruits and vegetables in general is increasing. Products are graded and inspected during packing and prior to export, and the products are inspected again upon arrival in the United States. All of this reduces the likelihood of a pest entering the United States. If, once a commodity has been imported into the United States, a person chooses to try to propagate that commodity, the person would likely choose the healthiest-looking material, thus further reducing the probability that a plant pest would be spread. The limited degree of risk that remains must be accepted if free trade is to be maintained.

Puerto Rico

One commenter felt that the proposal should not be approved since it would provide foreign countries importation rights and benefits which are currently being denied to other States and Territories. The commenter requested that we review and, if necessary, revise many of our regulations covering Puerto Rico to increase the number and kinds of fruits and vegetables moving into other parts of the United States from Puerto Rico. We will consider specific requests from Puerto Rico to allow the movement of specific fruits and vegetables to other parts of the United States. Once a request is received, we will perform a pest risk assessment to determine if there is significant risk of introducing injurious plant pests into other parts of the United States. After determining that the fruits or vegetables could be moved under certain conditions without significant pest risk, we would publish a proposed rule in the **Federal Register** to allow the movement of those fruits or vegetables into other parts of the United States.

Miscellaneous

We have made minor, editorial changes by removing the references to ''South Korea'' and by replacing them with ''the Republic of Korea,'' the official name for that country.

Therefore, based on the rationale set forth in the proposed rule and in this document, we are adopting the provisions of the proposal as a final rule, with the change noted above.

Effective Date

This is a substantive rule that relieves restrictions and, pursuant to the provisions of 5 U.S.C. 553, may be made effective less than 30 days after publication in the **Federal Register**. Immediate implementation of this rule is necessary to provide relief to those persons who are adversely affected by restrictions we no longer find warranted. Therefore, the Administrator of the Animal and Plant Health Inspection Service has determined that this rule should be effective upon publication in the **Federal Register**.

Executive Order 12866 and Regulatory Flexibility Act

This rule has been reviewed under Executive Order 12866. The rule has been determined to be not significant for the purposes of Executive Order 12866 and, therefore, has not been reviewed by the Office of Management and Budget.

In accordance with 5 U.S.C. 601 *et seq.*, we have performed a Final Regulatory Flexibility Analysis, set forth below, regarding the economic impact of this rule on small entities.

Under the Plant Quarantine Act and the Federal Plant Pest Act (7 U.S.C. 150dd, 150ee, 150ff, 151–167), the Secretary of Agriculture is authorized to regulate the importation of fruits and vegetables to prevent the introduction of injurious plant pests.

This final rule amends the regulations governing the importation of fruits and vegetables by allowing a number of previously prohibited fruits and vegetables to be imported into the United States from certain foreign countries and localities under specified conditions. The importation of these fruits and vegetables has been prohibited because of the risk that they could introduce injurious plant pests into the United States. This rule revises the status of certain commodities from certain countries and localities, allowing their importation into the United States for the first time.

These revisions are based on pest risk assessments that were conducted by APHIS at the request of various importers and foreign ministries of agriculture. The pest risk assessments indicate that the fruits or vegetables listed in this rule, under certain conditions, may be imported into the United States without significant pest risk. All of the fruits and vegetables, as a condition of entry, will be subject to inspection, disinfection, or both, at the port of first arrival as may be required by an inspector. In addition, some of the fruits and vegetables will be required to undergo mandatory treatment for fruit flies or other injurious insects as a condition of entry, or to meet other special conditions. This action will provide the United States with additional kinds and sources of fruits and vegetables while continuing to provide protection against the introduction into the United States of injurious plant pests by imported fruits and vegetables.

Apples

This rule allows apples to be imported into the United States from Spain under certain conditions. Spain's production of apples in 1993 was approximately 821,000 metric tons (mt). Spain's export level over the past 5 years has averaged 20,000 mt. In the unlikely event that Spain's apple exports were fully diverted to the United States, they would represent about 0.4 percent of U.S. production, an amount that would not significantly affect the U.S. market. Moreover, there would not be any off-season advantages, since Spain's main production season, June through September, inclusive, is the same as for U.S. apple producers.

In addition, the United States is a net exporter of apples. Total U.S. utilized production of apples in 1993 was 4,760,682 mt (fresh equivalent). (Utilized production of apples refers to the amount of apples sold plus the quantities of apples used on farms where grown and quantities of apples held in storage, thus those apples actually used in some way.) Imports of fresh apples in 1992 totaled 120,412 mt, or 2.5 percent of domestic utilized production that year, whereas exports totaled 507,614 mt, or 10.7 percent. Given this trade flow, the U.S. market for apples is not expected to exhibit the excess demand in the near future that could encourage increased foreign supply. The main commercial varieties grown in Spain (Golden Delicious, 50 percent; Granny Smith, 30 percent) are common varieties in the United States, and their export, therefore, would not satisfy any special market demand.

Asparagus (White)

This rule allows white asparagus to be imported into the United States from

Austria under certain conditions. Total U.S. asparagus production in 1993 was 2,204,000 hundredweight (cwt), or 99,973 mt. Austria's current production of asparagus is around 400 mt, 95 percent of which is white asparagus.

APHIS expects that annual exports to the United States may reach between 1 and 2 tons. This quantity represents less than 0.002 percent of U.S. production, and therefore will not affect prices received by U.S. growers.

Blueberries

This rule allows blueberries to be imported into the United States from Argentina under certain conditions. Total U.S. blueberry production in 1993 was 170,397,000 pounds, or 77,292 mt. About 40 percent was produced for the fresh fruit market, and about 60 percent was processed. APHIS estimates Argentina's current production of blueberries to be 40 mt per year, and we expect that figure to expand to 200 mt by 1997–98. At present, all blueberry exports from Argentina (80 percent of production) are sent to Europe. If approved for entry into the United States, we expect that 19.2 mt or 60 percent of blueberry exports from Argentina will be directed to U.S. ports. This quantity represents less than 0.03 percent of U.S. production, and therefore will not noticeably affect prices received by U.S. growers.

Carambola

This rule allows carambola to be imported into the United States from Taiwan under certain conditions. Ninety percent of domestic production of carambola takes place in southern Florida, where 60 to 90 growers cultivate a total of about 400 acres. Most of the producers are considered small entities, according to the Small Business Administration definition of annual gross receipts of $500,000 or less. U.S. production of carambola in 1994 reached between 5 and 6 million pounds, a quantity expected to gradually increase as consumer familiarity with carambola grows. At present, carambola is unknown to most U.S. consumers, and the industry faces the challenges of creating broader market appeal for this fruit.

Besides Florida, a relatively small amount of carambola is produced in Hawaii (58,400 pounds in 1992). A regulatory change last year now allows carambola grown in Hawaii to be marketed on the mainland. The initial volume to be shipped this year is estimated at 1,500 to 3,000 pounds.

Taiwan is reportedly the world's largest producer of carambola. In 1992, 35,738 mt (78.8 million pounds) were produced, about 12 times that of the United States. However, less than 10 mt (0.03 percent) of Taiwan's production is exported annually, mainly to Hong Kong and Canada. As an initial trial shipment, about 1 mt is expected to be exported to the United States per year.

California is a large and growing domestic market for carambola and the likely destination of carambola from Taiwan. It receives from 40 to 50 percent of Florida's carambola crop. California requires that carambola from Florida be cold treated, and APHIS requires cold treatment for shipments from Hawaii to the mainland. Imports from Taiwan will also require cold treatment.

Average prices received by U.S. carambola producers between 1989 and 1993 ranged from about $0.67 to $1.55 per pound. Farm prices in Taiwan vary from $0.60 to $4.00 per kg ($0.27 to $1.81 per pound), depending on the quality, size of production, and season. While prices are generally lower in Taiwan, high quality carambolas suitable for export sell well in Taiwan's domestic market. Relatively high farm prices and the fruit's well-established domestic market largely explain Taiwan's limited exports.

Carambola is sensitive to chilling, which can cause the skin to turn brown and become pitted. Since all carambola entering California will require cold treatment, effects of the treatment on the appearance and marketability of the fruit will be similar, whether the carambola comes from Florida, Hawaii, or Taiwan.

We received four comments disagreeing with the results of our Initial Regulatory Flexibility Analysis for carambola from Taiwan. They were from three domestic growers associations and an academic institution. The commenters were concerned with unfair competition and the impact on domestic producers. None of the commenters provided additional data, however, to dispute our figures. We carefully considered all of the comments. The comments and responses are summarized below.

One commenter stated that the classification of U.S. carambola producers as ''small entities'' does not change the fact that U.S. citizens are making their livelihood from producing carambola. Examination of the possible impact on U.S. carambola producers as ''small entities'' is required by the Regulatory Flexibility Act. No other significance is attached to the ''small entities'' classification.

One commenter felt that the United States is currently in a trade deficit with Taiwan, and allowing carambolas to be imported will only increase this deficit. APHIS bases its decisions to allow importation of fruits and vegetables on whether these importations can be made without significant risk of pest introduction. We have no authority to limit importations based on the size of a trade deficit.

Two commenters raised concerns that since the carambola is still a relatively unknown product in the United States, the marketing efforts for carambola by U.S. carambola producers would provide free benefits to Taiwan, and, Taiwan would gain as a result. While carambola imported from Taiwan may well benefit from U.S. efforts, U.S. producers may also benefit from Taiwanese marketing efforts.

All four commenters were concerned about the impact on U.S. carambola producers and disagreed with our evaluation that allowing the importation of carambola from Taiwan would have a positive impact on the U.S. economy. Since the extent of the impact is not known, one commenter questioned, ''Why experiment on an unknown outcome with the livelihood of American Citizens and small businesses?'' The commenter also stated, ''The carambola as a commercial crop in the U.S. is still an emerging industry with many unknowns. It would only seem wise to concentrate all of our resources on establishing the domestic side of this industry before allowing additional unknown elements to be added to the equation.'' Three commenters questioned our conclusion that a loss of income by U.S. producers would be positive for the U.S. economy.

The level of expected near-term imports is very small compared to U.S. carambola production (less than 0.1 percent). In fact, all of Taiwan's current carambola exports equals less than one percent of current U.S. production. If carambola retail prices in the United States declines with imports from Taiwan, then U.S. consumers will gain and U.S. producers will lose. The impact for the economy will be positive if the gains exceed the losses.

Assuming the market for carambola expands, and fruit from Taiwan is routinely imported, domestic producers' income will be less than it would be otherwise, due to a price decline and/or lower volumes than would be sold were there not imports. The critical question is what this reduction in income will be. There is no evidence to suggest that it will be significant.

From a broader perspective, sales and income lost by domestic producers should be balanced against benefits to U.S. consumers in terms of greater availability and/or lower prices. Again,

lack of information on how much carambola prices can be expected to decline as a result of imports, and the responsiveness of producers and consumers to a decline, precludes estimation of consumers' gains and domestic producers' losses. Nevertheless, APHIS believes that the net benefit to the U.S. economy will be positive.

Currants and Gooseberries

This rule allows currants and gooseberries to be imported into the United States from Argentina under certain conditions. Argentina's area of *Ribes* spp. production totals only four hectares, one of which is being used for experiments on the suitability of various species. The Economic Research Service, U.S. Department of Agriculture, estimates the annual crop at 30 mt, of which 40 percent, or 12 mt, could be exported to the United States.

Although published data on U.S. *Ribes* spp. production is not available, trade statistics show the United States to be a net importer. In 1992, 64 mt of currants and gooseberries were exported, and 264 mt of currants were imported. The quantity of *Ribes* spp. expected to be imported from Argentina is only 6 percent of 1992 net imports for the United States. APHIS does not expect this relatively small change in the quantity imported to significantly affect the market for U.S. producers.

Eggplant

This rule allows eggplant to be imported into the United States from the Republic of Korea under certain conditions. U.S. commercial production of eggplant in 1993 was 776,000 cwt (35,199 mt). The Republic of Korea's annual production of eggplant in 1993 totaled 22,751 mt, of which 30.3 mt were exported to Japan and Guam. If all of the Republic of Korea's eggplant exports were sent to the United States, it will represent less than 0.09 percent of U.S. commercial production.

Even in the very unrealistic scenario that the Republic of Korea's eggplant exports are fully diverted to the United States, the quantities will not be large enough to affect the U.S. market.

Kiwi

This rule allows kiwi to be imported into the United States from the Republic of Korea under certain conditions. Utilized U.S. production of kiwi in 1992 totaled 47,700 mt. Imports of kiwi into the United States for 1992 were estimated at 20,236 mt, or more than 40 percent of domestic production. The Republic of Korea's annual production of kiwi in 1993 totaled 8,538 mt, of which none was exported. Assuming 5 percent of the Republic of Korea's production (426.9 mt) were exported to the United States, this amount will represent only about 0.6 percent of U.S. supply (produced domestically and imported) in 1991.

Even in the very unrealistic scenario that the Republic of Korea exports 5 percent of its kiwi production to the United States, the quantities will not be large enough to affect the U.S. market.

Lettuce

This rule allows lettuce to be imported into the United States from Israel and the Republic of Korea under certain conditions. Total U.S. production of head, leaf, and romaine lettuce in 1993 was 82,790,000 cwt (3,755,330 mt). In Israel, insect-free lettuce produced in greenhouses for the 1993/94 season reached about 4,480,000 pounds. Exports planned for 1994/95 are estimated at 1,600,000 pounds. If all of these exports were destined for the United States, they would comprise less than 0.02 percent of U.S. production and, therefore, will not noticeably affect the U.S. market.

The Republic of Korea's annual production of leaf lettuce in 1993 totaled 149,611 mt, of which 23.9 mt were exported to Japan, Guam, Hong Kong, and Saipan. If all of the Republic of Korea's lettuce exports were sent to the United States, it would represent only about 0.0006 percent of U.S. production.

Even in the very unrealistic scenario that the Republic of Korea's lettuce exports are fully diverted to the United States, the quantities will not be large enough to affect the U.S. market.

The aggregate economic impact of this rule is expected to be positive. U.S. consumers will benefit from a greater availability of fruits and vegetables. U.S. importers will also benefit from a greater availability of fruits and vegetables to import.

The alternative to this rule was to make no changes in the fruits and vegetables regulations. After consideration, we rejected this alternative since there was no pest risk reason to maintain the prohibitions on the affected produce.

In the course of rulemaking, if we had come across evidence indicating that importation of any of the concerned fruits or vegetables would pose a significant risk of plant pest introduction, we would have considered either developing alternative requirements regarding that importation or continuing to prohibit the importation of that fruit or vegetable. However, our initial pest risk assessments and our review of public comments on the proposal indicated that importation of any of the concerned fruits and vegetables would pose no significant risk of plant pest introduction.

This rule contains no paperwork or recordkeeping requirements.

Executive Order 12778

This rule allows certain fruits and vegetables to be imported into the United States from certain parts of the world. State and local laws and regulations regarding fruits and vegetables imported under this rule will be preempted while the fruits and vegetables are in foreign commerce. Fresh fruits and vegetables are generally imported for immediate distribution and sale to the consuming public, and will remain in foreign commerce until sold to the ultimate consumer. The question of when foreign commerce ceases in other cases must be addressed on a case-by-case basis. No retroactive effect will be given to this rule; and this rule will not require administrative proceedings before parties may file suit in court challenging this rule.

National Environmental Policy Act

An environmental assessment and finding of no significant impact have been prepared for this rule. The assessment provides a basis for the conclusion that the importation of fruits and vegetables under the conditions specified in this rule will not present a significant risk of introducing or disseminating plant pests and will not have a significant impact on the quality of the human environment. Based on the finding of no significant impact, the Administrator of the Animal and Plant Health Inspection Service has determined that an environmental impact statement need not be prepared.

The environmental assessment and finding of no significant impact were prepared in accordance with: (1) The National Environmental Policy Act of 1969 (NEPA) (42 U.S.C. 4321 *et seq.*), (2) Regulations of the Council on Environmental Quality for Implementing the Procedural Provisions of NEPA (40 CFR parts 1500–1508), (3) USDA Regulations Implementing NEPA (7 CFR part 1b), and (4) National Environmental Policy Act Implementing Procedures (7 CFR part 372).

Copies of the environmental assessment and finding of no significant impact are available for public inspection at USDA, room 1141, South Building, 14th Street and Independence Avenue SW., Washington, DC, between 8 a.m. and 4:30 p.m., Monday through Friday, except holidays. Persons

wishing to inspect copies are requested to call ahead on (202) 690–2817 to facilitate entry into the reading room. In addition, copies may be obtained by writing to the individual listed under **FOR FURTHER INFORMATION CONTACT.**

Paperwork Reduction Act

This rule contains no information collection or recordkeeping requirements under the Paperwork Reduction Act of 1980 (44 U.S.C. 3501 *et seq.*).

List of Subjects

7 CFR Part 300

Incorporation by reference, Plant diseases and pests, Quarantine.

7 CFR Part 319

Bees, Coffee, Cotton, Fruits, Honey, Imports, Incorporation by reference, Nursery stock, Plant diseases and pests, Quarantine, Reporting and recordkeeping requirements, Rice, Vegetables.

Accordingly, 7 CFR parts 300 and 319 is amended as follows:

PART 300—INCORPORATION BY REFERENCE

1. The authority citation for part 300 continues to read as follows:

Authority: 7 U.S.C. 150ee, 154, 161, 162, and 167; 7 CFR 2.17, 2.51, and 371.2(c).

2. In § 300.1, paragraph (a) is revised to read as follows:

§ 300.1 Materials incorporated by reference.

(a) The Plant Protection and Quarantine Treatment Manual, which was reprinted November 30, 1992 and includes all revisions through March 1995, has been approved for incorporation by reference in 7 CFR chapter III by the Director of the Office of the Federal Register in accordance with 5 U.S.C. 552(a) and 1 CFR part 51.

* * * * *

PART 319—FOREIGN QUARANTINE NOTICES

3. The authority citation for part 319 continues to read as follows:

Authority: 7 U.S.C. 150dd, 150ee, 150ff, 151–167, and 450; 21 U.S.C. 136 and 136a; 7 CFR 2.17, 2.51, and 371.2(c).

§ 319.56–2r [Amended]

4. In § 319.56–2r, paragraph (a)(1) is amended by adding, in alphabetical order, ''Spain,''.

5. In § 319.56–2r, paragraph (g)(1) is amended by adding ''Spain,'' immediately before ''Sweden''.

6. In § 319.56–2t, the table is amended by revising ''South Korea'' to read ''Republic of Korea'' and by adding in alphabetical order, the following:

§ 319.56–2t Administrative instructions: conditions governing the entry of certain fruits and vegetables.

* * * * *

Country/locality	Common name	Botanical name	Plant part(s)
Argentina			
* *	* *	*	* *
	Currant	*Ribes* spp	Fruit.
* *	* *	*	* *
	Gooseberry	*Ribes* spp	Fruit.
Australia	Currant	*Ribes* spp	Fruit.
	Gooseberry	*Ribes* spp	Fruit.
Austria	Asparagus, white	*Asparagus officinalis*	Shoot.[3]
* *	* *	*	* *
Belize			
* *	* *	*	* *
	Sage	*Salivia officinalis*	Leaf and stem.
* *	* *	*	* *
El Salvador	Cilantro	*Coriandrum sativum*	Above ground parts.
	Dill	*Anethum graveolens*	Above ground parts.
* *	* *	*	* *
Honduras			
* *	* *	*	* *
	Cilantro	*Coriandrum sativum*	Above ground parts.
* *	* *	*	* *
Indonesia			
* *	* *	*	* *
	Onion	*Allium cepa*	Bulb.
	Shallot	*Allium ascalonicum*	Bulb.
* *	* *	*	* *
Nicaragua	Cilantro	*Coriandrum sativum*	Above ground parts.
* *	* *	*	* *
Peru			
* *	* *	*	* *
	Cornsalad	*Valerianella spp*	Whole plant.
* *	* *	*	* *
	Lambsquarters	*Chenopodium album*	Above ground parts.

Country/locality	Common name	Botanical name	Plant part(s)
* * * * * * *			
Republic of Korea			
* * * * * * *			
	Eggplant	*Solanum melongena*	Fruit.
	Kiwi	*Actinidia deliciosa*	Fruit.
	Lettuce	*Lactuca sativa*	Leaf.
* * * * * * *			
Tonga			
* * * * * * *			
	Jicama	*Pachyrhizus tuberosus*	Root.
* * * * * * *			

[3] No green may be visible on the shoot.

7. In § 319.56–2x, paragraph (a), the table is amended by adding, in alphabetical order, the following:

§ 319.56–2x Administrative instructions: conditions governing the entry of certain fruits and vegetables for which treatment is required.

(a) * * *

Country/locality	Common name	Botanical name	Plant part(s)
Argentina	Blueberry	*Vaccinium* spp	Fruit.
* * * * * * *			
El Salvador	Garden bean	*Phaseolus vulgaris*	Pod or shelled.
* * * * * * *			
Israel			
* * * * * * *			
	Lettuce	*Lactuca sativa*	Leaf.
* * * * * * *			
Taiwan	Carambola	*Averrhoa carambola*	Fruit.
* * * * * * *			

* * * * *

Done in Washington, DC, this 9th day of March 1995.

Lonnie J. King,

Acting Administrator, Animal and Plant Health Inspection Service.

[FR Doc. 95–6370 Filed 3–15–95; 8:45 am]

BILLING CODE 3410–34–P

FEDERAL TRADE COMMISSION

16 CFR Part 305

Rule Concerning Disclosures Regarding Energy Consumption and Water Use of Certain Home Appliances and Other Products Required Under the Energy Policy and Conservation Act ''Appliance Labeling Rule''

AGENCY: Federal Trade Commission.

ACTION: Final rule.

SUMMARY: The Federal Trade Commission (''Commission'') announces non-substantive amendments to its Appliance Labeling Rule (''Rule''). Specifically, the Commission is amending the Rule's water flow rates disclosure requirements for showerheads and faucets to specify that the metric disclosures ''liters per minute'' and ''liters per cycle'' be abbreviated as ''L/min'' and ''L/cycle'' rather than ''Lpm'' and ''Lpc.''

EFFECTIVE DATE: May 16, 1995.

FOR FURTHER INFORMATION CONTACT: Terrence J. Boyle, Attorney, (202) 326–3016, Division of Enforcement, Bureau of Consumer Protection, Federal Trade Commission, Washington, DC 20580.

SUPPLEMENTARY INFORMATION: The Energy Policy and Conservation Act of 1975 (''EPCA'') directed the Commission to issue rules requiring various categories of home appliances and other products to be labeled with information about their energy consumption and efficiency.[1] Pursuant to EPCA, the Commission on November 19, 1979, issued the Appliance Labeling Rule requiring label disclosures of energy operating costs and/or efficiency for seven categories of products.[2]

The Energy Policy Act of 1992 (''EPA 92'') amended EPCA to add showerheads, faucets, water closets and urinals as covered products. As amended, EPCA establishes for showerheads and faucets a national maximum water flow rate standard of 2.5 gallons per minute at 80 pounds per square inch (''psi'') water pressure and, for those products, adopted the testing methods of the American Society of Mechanical Engineers (''ASME'') Standard A112.18.1M as ''the proper protocols for measuring the water usage.'' [3] EPA 92 also directed the Commission to issue rules requiring these plumbing products to be permanently marked with their water flow rates and to bear disclosures ''consistent with the marking and

[1] 42 U.S.C. 6291, 6294.

[2] 44 FR 66466.

[3] 42 U.S.C. 6293(b) (7)(A) and (8)(A).

labeling requirements'' of specified national standards that have been published for such products by ASME.[4]

On October 25, 1993, the Commission amended the Rule to add four categories of plumbing fixtures and fittings.[5] The amended Rule requires water closets, urinals and showerheads, as well as faucets and the flow restricting devices (aerators) that are placed in faucets, to be clearly and conspicuously labeled, and water closets, urinals and showerheads to be permanently and legibly marked, with disclosures of their water flow rates.[6] The amended Rule also requires, in all point-of-sale promotional materials for such plumbing products and in all catalogs offering such products for sale, disclosure of the products' water flow rates.[7]

The amended EPCA provides that if ASME revises the marking and labeling requirements contained in its Standard A112.18.1M for showerheads and faucets, and if the American National Standards Institute (''ANSI'') approves the revisions, the Commission shall amend the Rule to be consistent with the revisions, unless the revisions are inconsistent with the purposes of EPA 92 or with the requirement that plumbing fittings be permanently marked with legible disclosures of their water flow rates.[8]

On July 8, 1994, ASME adopted, and on September 15, 1994, ANSI approved and published, revisions to the ASME National Standard A112.18.1M that governs showerheads and faucets. One of these revisions pertains to the Commission's Rule because it changes the abbreviations used by the ASME Standard in its marking and labeling requirements for plumbing fittings.[9] The first revision to the ASME Standard changed the abbreviations for ''liters per minute'' and ''liters per cycle'' from ''Lpm'' and ''Lpc'' to ''L/min'' and ''L/cycle'' respectively. The change was made to avoid confusion with the ''m'' that is internationally recognized as the proper abbreviation for meter.[10]

The Commission is amending the Rule to adopt the ASME abbreviations of ''liters per minute'' and ''liters per cycle'' for required disclosure of the water flow rates of faucets (and aerators) and showerheads.[11] Because this rule amendment is technical in nature and is not intended to modify the substantive legal requirements and restrictions imposed by the Rule, the Commission finds that a comment period is not necessary or warranted for purposes of the Administrative Procedures Act. *See* 5 U.S.C. 553(b).

ASME and ANSI also tentatively made a second revision to ASME Standard A112.18.1M that would pertain to the marking and labeling requirements of the Commission's Rule. This second revision changed the Standard's protocols for measuring the water flow rates of faucets, requiring measurements at 60 psi instead of the 80 psi specified in the national standard. The Commission's Rule requires flow rate disclosures to be based on measurements at 80 psi as specified in the national standard established by EPA 92. ASME made this change in water pressures in its September 15, 1994, revision of the existing ASME Standard for faucets and showerheads. But, on December 19, 1994, the ASME committee for these products voted to rescind the change and return to using 80 psi. ASME and ANSI will soon act on the proposed rescission. Under section 324(a)(2)(D)(ii) of EPCA, any change in the water pressures used to test faucets would first have to be approved by the Department of Energy (''DOE'') by rule before the Commission can incorporate the change into the Appliance Labeling Rule.[12] Therefore, even if ASME and ANSI ultimately decide to retain the change to 60 psi, prior action by DOE is needed before the Commission can act on the change.

List of Subjects in 16 CFR Part 305

Advertising, Water conservation, Household appliances, Incorporation by reference, Labeling, Reporting and recordkeeping requirements.

Text of Amendments

Accordingly, 16 CFR part 305 is amended as follows:

Rule Concerning Disclosures Regarding Energy Consumption and Water Use of Certain Home Appliances and Other Products Required Under the Energy Policy and Conservation Act (''Appliance Labeling Rule'')

1. The authority citation for part 305 continues to read as follows:

Authority: 42 U.S.C. 6294.

2. Section 305.8 is amended by revising paragraph (a)(4)(v) to read as follows:

§ 305.8 Submission of data.

(a) * * *

(a) * * *

(v) The product's water use, expressed in gallons and liters per flush (gpf and Lpf) or gallons and liters per minute (gpm and L/min) or per cycle (gpc and L/cycle) as determined in accordance with § 305.5.

* * * * *

3. Section 305.11 is amended by revising subparagraph (f) to read as follows:

§ 305.11 Labeling for covered products.

* * * * *

(f) *Plumbing Products*—

(1) * * *

(i) Each showerhead and flow restricting or controlling spout end device shall bear a permanent legible marking indicating the flow rate, expressed in gallons per minute (gpm) or gallons per cycle (gpc), and the flow rate value shall be the actual flow rate or the maximum flow rate specified by the standards established in subsection (j) of section 325 of the Act, 42 U.S.C. 6295(j). Except where impractical due to the size of the fitting, each flow rate disclosure shall also be given in liters per minute (L/min) or liters per cycle (L/cycle). For purposes of this section, the marking indicating the flow rate will be deemed ''legible,'' in terms of placement, if it is located in close proximity to the manufacturer's identification marking.

* * * * *

(v) The package or any label attached to the package for each showerhead or faucet shall contain at least the following: ''A112.18.1M'' and the flow rate expressed in gallons per minute (gpm) or gallons per cycle (gpc), and the flow rate value shall be the actual flow rate or the maximum flow rate specified by the standards established in

[4] Pub. L. 102–486, 106 Stat. 2778, 2817–2832 (1992).

[5] 58 FR 54955.

[6] 16 CFR part 305.11(e) (1) and (2).

[7] 16 CFR part 305.13(a)(2) and .14(d).

[8] 42 U.S.C. 6294(a)(2)(D)(ii).

[9] A second revision changed the Standard's protocols for measuring faucet water flow rates. See discussion *infra*.

[10] The ''liters per cycle'' change was just for symmetry. For English system disclosures, though, the revised ASME Standard continues to use just the letter ''m'' to stand for minute. The use of ''m'' there was not seen as confusing because, since gallons are not metric units of measurement, readers would not likely think of meters.

[11] For technical reasons the Commission has specified an effective date of May 16, 1995, for this amendment. The Rule in recent months has been amended on several occasions both to add new product categories and to revise the disclosure requirements for several existing categories. To ensure an orderly publication of all these amendments in the Code of Federal Regulations, the Commission is setting the effective date for this amendment to follow immediately that of the Commission's previous amendment to the Rule, which added lamps as covered products. The Commission, however, will permit manufacturers to begin immediately using the abbreviations ''L/min'' and ''L/cycle'' in place of ''Lpm'' and ''Lpc,'' deeming the use of the revised abbreviations prior to the effective date of the amendment to be compliance with the Rule.

[12] 42 U.S.C. 6294(a)(2)(D)(ii).

subsection (j) of section 325 of the Act, 42 U.S.C. 6295(j). Each flow rate disclosure shall also be given in liters per minute (L/min) or liters per cycle (L/cycle).

* * * * *

4. Section 305.13 is amended by revising subparagraph (a)(4) to read as follows:

§ 305.13 Promotional material displayed or distributed at point of sale.

(a) * * *

(4) Any manufacturer, distributor, retailer, or private labeler who prepares printed material for display or distribution at point-of-sale concerning a covered product that is a showerhead, faucet, water closet, or urinal shall clearly and conspicuously include in such printed material the product's water use, expressed in gallons and liters per minute (gpm and L/min) or per cycle (gpc and L/cycle) or gallons and liters per flush (gpf and Lpf) as specified in § 305.11(f).

* * * * *

5. Section 305.14 is amended by revising subparagraph (d) to read as follows:

§ 305.14 Catalogs.

* * * * *

(d) Any manufacturer, distributor, retailer, or private labeler who advertises a covered product that is a showerhead, faucet, water closet, or urinal in a catalog, from which it may be purchased, shall include in such catalog, on each page that lists the covered product, the product's water use, expressed in gallons and liters per minute (gpm and L/min) or per cycle (gpc and L/cycle) or gallons and liters per flush (gpf and Lpf) as specified in § 305.11(f).

* * * * *

By direction of the Commission.

Donald S. Clark,

Secretary.

[FR Doc. 95–6484 Filed 3–15–95; 8:45 am]

BILLING CODE 6750–01–M

DEPARTMENT OF THE TREASURY

Customs Service

19 CFR Part 101

[T.D. 95–21]

RIN 1515–AB47

Test Programs

AGENCY: Customs Service, Department of the Treasury.

ACTION: Final rule.

SUMMARY: This document amends the Customs Regulations by adding a new provision that allows for test programs and procedures in general and, specifically, for purposes of implementing those Customs Modernization provisions of the North American Free Trade Agreement Implementation Act that provide for the National Customs Automation Program. The regulation allows the Commissioner of Customs to conduct limited test programs/procedures, which have as their goal the more efficient and effective processing of passengers, carriers, and merchandise. Test programs may impose upon eligible, voluntary participants requirements different from those specified in the Customs Regulations, but only to the extent that such different requirements do not affect the collection of the revenue, public health, safety, or law enforcement.

EFFECTIVE DATE: April 17, 1995.

FOR FURTHER INFORMATION CONTACT: John Durant, Director, Commercial Rulings Division, (202) 482–6990.

SUPPLEMENTARY INFORMATION:

Background

Title VI of the North American Free Trade Agreement Implementation Act (the Act), Public Law 103–182, 107 Stat. 2057 (December 8, 1993), contains provisions pertaining to Customs Modernization (107 Stat. 2170). Subtitle B of title VI establishes the National Customs Automation Program (NCAP)—an automated and electronic system for the processing of commercial importations. Section 631 in Subtitle B of the Act creates sections 411 through 414 of the Tariff Act of 1930 (19 U.S.C. 1411–1414), which define and list the existing and planned components of the NCAP (section 411), promulgate program goals (section 412), provide for the implementation and evaluation of the program (section 413), and provide for remote location filing (section 414).

Section 631 of the Act provides Customs with direct statutory authority for full electronic processing of all Customs-related transactions. For each planned NCAP program component, Customs is required to prepare a separate implementation plan in consultation with the trade community, establish eligibility criteria for voluntary participation in the program, test the component, and transmit to Congress the implementation plan, testing results, and an evaluation report. The testing of any planned NCAP components would be conducted under carefully delineated circumstances—with objective measures of success or failure, a predetermined time frame, and a defined class of participants. Notice of any NCAP program component testing would be published in both the Customs Bulletin and the **Federal Register** and participants solicited.

In addition to testing planned NCAP components, Customs also proposed conducting limited test programs/procedures in other areas of Customs-related transactions wherein Customs and the trade community could benefit from the valuable information that such testing could provide. Thus, Customs proposed a general test authority in order both to meet its obligations under the NCAP legislation and to provide itself with the ability to obtain information necessary to predict the effects of various policy options.

The regulation proposed would allow the Commissioner of Customs to conduct limited test programs and procedures and allow certain eligible members of the public to participate on a voluntary basis. Also, because test programs could require exemptions from regulations in various parts of the Customs Regulations, *e.g.*, parts 113 (Customs bonds), 141 (entry of merchandise), 142 (entry process), 171 (fines, penalties, and forfeitures), 174 (protests), and 191 (drawback), participants would be subject to requirements different from those specified in the Customs Regulations, but only to the extent that such different requirements do not affect the collection of the revenue, public health, safety, or law enforcement. Accordingly, pursuant to the Secretary's authority under section 624 of the Tariff Act of 1930 (19 U.S.C. 1624) to make such rules and regulations as may be necessary to carry out the provisions of the Tariff Act of 1930 and pursuant to the requirement set forth in section 413 of the Tariff Act of 1930 (19 U.S.C. 1413) that the Secretary test planned NCAP program components, on August 16, 1994, Customs published a Notice of Proposed Rulemaking in the **Federal Register** (59 FR 41992) that proposed to amend part 101 of the Customs Regulations (19 CFR part 101) by adding a new § 101.9 that would allow the Commissioner of Customs to conduct limited test programs and procedures in general and for purposes of implementing NCAP program components. Seven comments, most favorable to the proposed regulation, were received. These comments raised four areas of concern. The comments received and Customs responses to them are set forth below.

Discussion of Comments

Comments were received from corporate sureties (1), customs brokers

(4), and transportation associations (2). The comments raised four areas of concern. The concerns relate to: (1) Generally, whether there will be equal opportunity to participate in tests and whether statutory requirements would be subject to suspension; (2) the manner and amount of notice that would be provided; (3) the length of time in which tests would be conducted; and, (4) the nature of voluntary participation. We address each of these concerns *seriatim*.

In General

Comment: A commenter states that language should be added to § 101.9(a) ''to protect Customs businesses'' to the effect that no test shall be made that will give economical advantages to one class of importer, exporter, carrier, customs broker, freight forwarder, or courier over another, or one geographic area over another.

Customs Response: While Customs understands the commenter's concern, it believes that adding the suggested language to the regulation would unduly inhibit Customs ability to modernize, i.e., to streamline and automate the commercial operations of the Customs Service, the reason the Customs Modernization provisions were promulgated in the first place. The purpose of a test is to experiment to see if something works. Hopefully, if the test is successful, those who have chosen to participate will benefit. Customs, however, does not wish to be unfair to non-participants. Accordingly, the proposed regulation provides for notice in the **Federal Register** to the public when a test will be run. These notices of proposed tests will allow all interested parties to choose to participate and to comment on any problem they perceive will result from the test proposed, including a perceived problem of economical advantages being offered to one party over another. Customs, generally, will attempt to address such concerns before a test is run. If there are instances when Customs may need to conduct tests that are company-/industry-specific, so that economies of scale and other program parameters can be realized, the proposed regulation seeks to limit the advantage that the test may provide by requiring that the test be limited in time and scope.

While not adding the language suggested by the commenter, Customs has determined, after review of this comment and others, to modify the proposal to broaden the notice requirements. As now drafted, the final regulation no longer provides that public notice is not required for non-NCAP tests affecting carriers and passengers. Further, the ''whenever practicable'' language in the non-NCAP paragraph describing the publication requirement is removed. Instead, the regulation provides that whenever a particular test allows for deviation from any regulatory requirement, notice shall be published in the **Federal Register** not less than 30 days prior to implementing such test. Customs believes that this allows all Customs businesses to comment on all tests and provides adequate time for comments.

Comment: Two commenters are concerned with whether tests will be conducted other than on a parallel basis which would violate a *statutory* requirement. One of these commenters argues that language should be added to § 101.9(a) to the extent that no test should be implemented that is contrary to U.S. law, because federal agencies should not be allowed to set up a ''test'' as a simple way of circumventing the laws passed by Congress.

Customs Response: Customs believes that it is clearly understood that any test programs will be consistent with statutes and, therefore, it is unnecessary to add language to the regulation to so indicate.

Notice

Comment: The proposed regulatory text may not provide sureties with proper and timely notice of variations of its risk. The commenter, a corporate surety, states that notice provided ''whenever practicable'' or ''within a reasonable period of time'' may run contrary to the stated objectives of the Notice because it would ''affect the collection of revenue'' by varying the surety's risk under its bond. The obligation of a compensated surety is predicated upon certain known risks or underwriting components and to the extent a surety's risk is varied without its prior consent, sureties could be discharged from any obligation under their bonds. Accordingly, the commenter suggests that proper and timely notice of all test programs and results should be provided to sureties to enable them to decide whether to agree to be bound under a particular varied risk arising under a NCAP test program.

Another commenter believing that the § 101.9(b)(2) requirement for publication of complete test results ''within a reasonable time'' is not specific enough recommends that the regulation should provide that, ''unless extended by **Federal Register** Notice, within 60 days following the completion of the test, complete test results shall be published.'' Further, the commenter urges that the published results also include a list of the participants in the test.

Customs Response: Test programs will not be run that affect the collection of the revenue. All duties, taxes, and fees owed to the U.S. by law continue to be owed by the responsible parties throughout any test program.

Regarding the issue of proper and timely notice to sureties, Customs has modified the proposal in this final rule to provide that whenever a particular test allows for deviation from any regulation requirement, notice shall be published not less than 30 days prior to implementing such test. When there is publication in the **Federal Register**, such publication serves as constructive notice and is notice to all. Customs believes that the 30-day time frame affords interested sureties adequate time to discuss any of their bond conditions within the context of participating in a test program, and to separately respond to those test notices about which they may have questions concerning their underwritten risk. In accordance with the above, Customs has determined that it will not provide separate notices to sureties.

Regarding the suggestion to amend the proposed regulation to provide that publication of complete test results be accomplished within 60 days unless extended by **Federal Register** notice, Customs does not agree. While in general Customs will make every effort to publish discrete test results as soon as possible, setting forth a specific time frame in the regulation—applicable to all tests results—will not give the Customs Service the flexibility it needs to properly evaluate certain NCAP program components to assess their contribution toward achieving specified program goals. Some tests may not be one-time tests, and others may build on other test results.

Concerning publishing a list of the participants in an NCAP test, while Customs has no hesitation in providing this information, Customs does not want to routinely publish such lists. Accordingly, Customs will provide a list of participants upon written request and believes that this element of test notices need not be set forth in the regulation.

Comment: A commenter states that, although notification of tests will be published in the **Federal Register** and the Customs Bulletin, Customs should ensure that the trade community is involved and informed about all of the test programs and procedures for the various components. Accordingly, the commenter suggests that test information be sent via electronic mail to the main contacts for various trade community representatives or that a

primary contact, knowledgeable of all test programs and procedures be appointed as the single contact for the trade community. Also, the commenter does not feel that the proposed regulation should further the cause for producing additional 'paper-based' forms.

Customs Response: Section 631 of the Act specifically requires the Secretary to consult with the trade community, to include importers, brokers, shippers, and other affected parties when developing NCAP program components. To this end, in addition to the regulatory notification requirements adopted, Customs will be placing test information on the Customs electronic bulletin board. As for furthering the need for paper-based forms, it is hoped that the need for this medium of information will be changed based on tests proposed to take advantage of new or changing technologies.

Comment: A commenter states that proposed § 101.9(a)(2) should be amended to require advance notification to passengers and carriers because tests affecting passengers will necessarily affect the carriers they use. Thus, carriers should be notified of proposed tests well in advance.

Customs Response: As stated earlier in the document, Customs is modifying the proposal in this final rule to provide notice whenever a particular test allows for deviation from any regulation requirement.

Comment: One commenter states that it is not at all clear from either the **BACKGROUND** section or the proposed regulatory text section of the Notice whether the procedures which will be tested will be in addition to those already required under the regulations, *i.e.*, will they constitute a parallel test, or whether the current regulatory procedures would not be followed. If the latter is the case, proposed § 101.9 should provide that Customs Headquarters will issue a letter to each participant advising them of the fact that, during the period of the test, they will not have to abide by certain identified regulation(s) or specify any other requirements.

Customs Response: The proposal to amend § 101.9 to provide that Customs will issue a letter to participants only advising them that they will not have to abide by certain identified regulation(s) or specify any other requirements is rejected. This approach is not in keeping with program requirements to consult with the trade community. Instead, each **Federal Register** notice published announcing a specific test will identify which, if any, regulatory requirements may be suspended for purposes of the test. Customs believes such publication will afford all interested parties an opportunity to comment on planned tests. Accordingly, no change to the regulation is made based on this comment.

Time/Duration

Comment: A commenter believes that implementation of the proposed rule, as written, would mean that Customs would have *carte blanche* authority to do whatever it wanted with respect to ''testing'', ''procedures'' or any derivation of these two words. It could conduct such ''tests'' or invoke such ''procedures'' for whatever period of time it decided—one month, one year, five years. Customs could select whomever it chose to participate without being subject to anyone's challenge. The sole interpreter would be Customs and neither importers nor brokers would have any timely recourse. For these reasons, it strongly opposes issuance of the rule as proposed; there is too big a chance for misuse.

Customs Response: The purpose of publishing test proposals in the **Federal Register** is to avoid such problems. The Customs Modernization provisions are intended, in part, to provide safeguards, uniformity, and due process rights for importers. Customs believes that the publication requirement imposed by the proposed regulation adequately meets the unlimited-time-fears expressed by the commenter and affords all interested parties the opportunity to comment on any aspect of proposed tests, including the proposed length of a test. Accordingly, no change to the regulation is made based on this comment.

Comment: A commenter states that the 30-day time period for giving notice prior to implementing a test, provided at §§ 101.9 (a)(2) and (b)(1), should be increased to 60 days to allow adequate time for the trade community to comment on proposed tests and to give Customs time to review the comments before the test is put into effect. To this end the commenter states that Customs has, in the past, instituted ''programs'', *e.g.*, revising the CF 7512, which resulted in the public spending hundreds of thousands of dollars to acquire the new form only to have Customs withdraw the form because of problems with the form. The commenter suggests that an extended comment period will save more money than it costs over the long run. Further, since almost all tests will involve computer programming time, the trade will need the additional time to reprogram their computers for the test.

Customs Response: As already stated, Customs will be publishing notice of proposed tests on the Customs electronic bulletin board and otherwise inform the trade community of pending developments. As no rational basis has been given to double the length of time for comments—from 30-days to 60-days—and the present electronic environment adequately affords Customs time to review comments before a test is implemented, no change to the regulation is made based on this comment.

Comment: A commenter suggests that the ''time'' for a test should be defined—given a definite time restriction—and published with the initial notification of a test, as, in the past, Customs has had some ''tests'' go on for years, *e.g.*, monthly periodic Customs entries on automobile parts and imports of oil and gas. Further, if the test is successful, the Customs Regulations and practices should be changed so that the new procedure(s) can be enjoyed by all. And if it is necessary to extend a test period, 30 days prior to the test end date, notice should be published.

Also concerned with the length of time for a test, another commenter suggests that in all cases, the regulation should specify that the notice must contain either the specific dates for the test (beginning and ending) or the length of the test. If Customs finds it cannot adhere to the period specified, a notice should be published specifying the reasons for the variance and the new dates. This procedure, it is felt, will avoid what has been the past practice of continuing tests *ad infinitum*.

Customs Response: These comments concerning unlimited time periods for tests do not square with the provisions of the proposed regulation, which expressly state that tests will be ''limited in scope, time, and application to such relief as may be necessary to facilitate the conduct of a specified program or procedure.'' 19 CFR 101.9 (a)(1) and (b). At the risk of sounding repetitive, we again state that the publication requirement will allow all interested parties to comment on proposed tests and to express their particular concerns. This publication requirement does not constitute a hollow gesture on Customs part, as, for NCAP tests, Customs must subsequently prepare a user satisfaction survey of parties participating in the program and transmit a report of this survey to Congress. As the proposed regulations adequately address these comments, no change to the regulation is made based on this comment.

Voluntary Participation

Comment: Two commenters express concern regarding the ''voluntary'' nature of participation in tests. One commenter states that voluntary participation in a test should mean that volunteers should be allowed to withdraw from a test upon a change in the conditions of the test. The other commenter suggests that, to recognize the importance of Customs test programs and filers' voluntary participation in these programs, a new paragraph (c) be added to § 101.9 to read as follows:

(c) *Voluntary participation.* For tests affecting the entry of merchandise, and for which participation by an entry filer requires or includes a change in the manner, amount, or format of data submitted to Customs by that filer, such participation shall be entirely voluntary. An otherwise qualified filer's entry privileges, including but not limited to electronic entry privileges, may not be reduced, suspended, limited, or withdrawn by Customs solely because that filer declines to participate in one or more such tests.

The commenter states that the voluntary status of filer participation in new Customs programs would be explicitly limited to those involving merchandise, and to those which are in fact test programs. There would be no impediment to Customs mandatory implementation of uniform procedures at points *past* the test stage.

The commenter states the impetus for this amendment to the proposed regulations is a recent Customs/FDA electronic interface pilot program in Seattle. Although in the first few months of the program filer participation was entirely voluntary, such that brokerage firms could elect when to participate, for the last year and a half participation has been mandatory for Seattle-area brokers who wish to file their entries electronically. If a Seattle broker does not wish to participate in the pilot program, that broker must file non-ABI entries for cargo subject to FDA oversight. In effect, the commenter claims that such a broker is penalized by Customs for declining to participate in that particular test program. In general, the commenter is also very concerned about the potential impact of some types of Customs test programs upon certain sections of the trade community, especially those test programs which alter the manner, amount, or format of data transmitted by an entry filer to Customs, as such programs require the filer to incur at least some additional costs, in order to participate in each test program.

Customs Response: Section 631 of the Act expressly provides that ''[p]articipation in the [NCAP] Program is voluntary.'' 19 U.S.C. 1411(b). Accordingly, a broker's, importer's, etc., initial decision to become automated is entirely voluntary. However, as stated in the BACKGROUND portion of the **Federal Register** notice of proposed rulemaking, section 631 of the Act also provides Customs with direct statutory authority for full electronic processing of all Customs-related transactions. Thus, for Customs to implement the NCAP and comply with the other mandates of section 631—(1) development of separate implementation plans for each NCAP component, in consultation with the trade community, (2) establishment of eligibility criteria for voluntary participation, (3) testing of the components, and (4) transmittal to Congress of the implementation plan, testing results, and an evaluation report—a certain continuity of test participants must be observed. Accordingly, while Customs will make every effort to make as many aspects of tests as completely voluntary as possible, Customs believes that while the decision by a broker or other participant to participate in an automated Customs program is voluntary in the first instance, continued participation in a particular test may be required. In any event, a participant may always choose to not participate with a particular automated component if the parameters of the testing are not to their liking. If any doubts as to participation in a particular test program or procedure exist after the parameters of the test are published in the **Federal Register**, the hesitant participant should take advantage of the comment period to seek clarification. Accordingly, because of the extensive statutory requirements that Customs must meet to conduct NCAP tests, Customs does not believe that further regulatory language is needed at this time.

Inapplicability of the Regulatory Flexibility Act, and Executive Order 12866

Pursuant to the provisions of the Regulatory Flexibility Act (5 U.S.C. 601 *et seq.*) and based upon the information set forth above, it is certified that the regulation will not have a significant impact on a substantial number of small entities. Accordingly, the regulation is not subject to the regulatory analysis or other requirements of U.S.C. 603 and 604. Further, this document does not meet the criteria for a ''significant regulatory action'' as specified in E.O. 12866.

Drafting Information

The principal author of this document was Gregory R. Vilders, Attorney, Office of Regulations and Rulings, Regulations Branch. However, personnel from other offices participated in its development.

List of Subjects in 19 CFR Part 101

Customs duties and inspection, Exports, Imports, Organization and functions (Government agencies), Reporting and recordkeeping requirements, Sureties, Tests.

Amendments to the Regulations

For the reasons stated above, part 101 of the Customs Regulations (19 CFR part 101) is amended as set forth below:

PART 101—GENERAL PROVISIONS

1. The authority citation for part 101 is revised to read as follows:

Authority: 5 U.S.C. 301; 19 U.S.C. 2, 66, 1202 (General Note 17, Harmonized Tariff Schedule of the United States (HTSUS)), 1623, 1624.

Section 101.3 and 101.4 also issued under 19 U.S.C. 1 and 58b;

Section 101.9 also issued under 19 U.S.C. 1411–1414.

2. In part 101, a new § 101.9 is added to read as follows:

§ 101.9 Test programs or procedures; alternate requirements.

(a) *General testing.* For purposes of conducting a test program or procedure designed to evaluate the effectiveness of new technology or operational procedures regarding the processing of passengers, vessels, or merchandise, the Commissioner of Customs may impose requirements different from those specified in the Customs Regulations, but only to the extent that such different requirements do not affect the collection of the revenue, public health, safety, or law enforcement. The imposition of any such different requirements shall be subject to the following conditions:

(1) *Defined purpose.* The test is limited in scope, time, and application to such relief as may be necessary to facilitate the conduct of a specified program or procedure;

(2) *Prior publication requirement.* Whenever a particular test allows for deviation from any regulatory requirements, notice shall be published in the **Federal Register** not less than thirty days prior to implementing such test, followed by publication in the Customs Bulletin. The notice shall invite public comments concerning the methodology of the test program or procedure, and inform interested members of the public of the eligibility criteria for voluntary participation in

the test and the basis for selecting participants.

(b) *NCAP testing.* For purposes of conducting an approved test program or procedure designed to evaluate planned components of the National Customs Automation Program (NCAP), as described in section 411(a)(2) of the Tariff Act of 1930 (19 U.S.C. 411), the Commissioner of Customs may impose requirements different from those specified in the Customs Regulations, but only to the extent that such different requirements do not affect the collection of the revenue, public health, safety, or law enforcement. In addition to the requirement of paragraph (a)(1) of this section, the imposition of any such different requirements shall be subject to the following conditions:

(1) *Prior publication requirement.* For tests affecting the NCAP, notice shall be published in the **Federal Register** not less than thirty days prior to implementing such test, followed by publication in the Customs Bulletin. The notice shall invite public comments concerning any aspect of the test program or procedure, and inform interested members of the public of the eligibility criteria for voluntary participation in the test and the basis for selecting participants; and,

(2) *Post publication requirement.* Within a reasonable time period following the completion of the test, a complete description of the results shall be published in both the **Federal Register** and the Customs Bulletin.

Approved: February 21, 1995.

George J. Weise,

Commissioner of Customs.

John P. Simpson,

Deputy Assistant Secretary of the Treasury.

[FR Doc. 95–6525 Filed 3–15–95; 8:45 am]

BILLING CODE 4820–02–P

DEPARTMENT OF HEALTH AND HUMAN SERVICES

Social Security Administration

20 CFR Part 416

[Regulations No. 16]

RIN 0960–AC22

Supplemental Security Income for the Aged, Blind, and Disabled; Continuation of Benefits and Special Eligibility for Certain Severely Impaired Recipients Who Work; Appeal Rights Following Mass Change Resulting in Reduction, Suspension, or Termination of State Supplementary Payments; and Deemed Application Date Based on Misinformation; Correction

AGENCY: Social Security Administration, HHS.

ACTION: Correction to final rules.

SUMMARY: This document contains corrections to the final rules published in the **Federal Register** on Friday, August 12, 1994 (59 FR 41400), Monday, August 22, 1994 (59 FR 43035), and Wednesday, August 31, 1994 (59 FR 44918). We are correcting incorrect paragraph redesignations and related amendatory instructions, as well as making one technical correction to a paragraph in one regulatory section.

EFFECTIVE DATE: March 16, 1995.

FOR FURTHER INFORMATION CONTACT: Regarding this **Federal Register** document—Richard M. Bresnick, Legal Assistant, Office of Regulations, Social Security Administration, 6401 Security Boulevard, Baltimore, MD 21235, (410) 965–1758; regarding eligibility or filing for benefits—our national toll-free number, 1–800–772–1213.

SUPPLEMENTARY INFORMATION: In the final rules that appeared on page 41400 in the **Federal Register** issued of Friday, August 12, 1994, we had incorrect paragraph redesignations in amendatory item 15. We indicated that in § 416.1402 we were redesignating paragraphs (i) through (n) as paragraphs (h) through (m). However, paragraph (n) had not yet been published. Thus, paragraphs (i) through (m) should have been redesignated as paragraphs (h) through (l). The new paragraph (n) was to be contained in other final rules, ''Deemed Application Date Based on Misinformation,'' which were to be published before these rules but were not published until August 31, 1994 (59 FR 44918). We discovered this before ''Deemed Application Date Based on Misinformation'' was published, however, and changed the designation of that new paragraph in the later rules to paragraph (m) to reflect the proper redesignation which should have been made in the rules published on August 12, 1994.

In the interim, on August 22, 1994, we published other final rules, ''Appeal Rights Following Mass Change Resulting in Reduction, Suspension, or Termination of State Supplementary Payments'' (59 FR 43035), which contained a new paragraph designated paragraph (n) in § 416.1402 which would have been correct if the regulations had been published in the anticipated sequence. The amendatory item 3 in these final rules contained other incorrect paragraph designations and instructions for punctuating § 416.1402. Further, similar incorrect instructions for revising § 416.1402 were contained under part 416 in amendatory item 6 in the final rules published on August 31, 1994. Also, paragraph (m) as published in these rules was incorrectly punctuated and did not have the word ''and'' following it. Therefore, we are correcting all three amendatory items and paragraph (m) itself to reflect the correct paragraph designations, punctuation, and ending word ''and.'' With these corrections, all the paragraphs and amendatory instructions will be correct. Make the corrections as follows:

1. In the **Federal Register** issue of August 12, 1994, in the second column on page 41405, amendatory item 15 should read as follows:

15. Section 416.1402 is amended by revising paragraphs (a) and (b), removing paragraph (h), and redesignating paragraphs (i) through (m) as paragraphs (h) through (l), respectively to read as follows:

2. In the **Federal Register** issue of August 22, 1994, in the first column on page 43039, amendatory item 3 should read as follows:

3. Section 416.1402 is amended by removing the word ''and'' following the semicolon at the end of paragraph (k), replacing the period at the end of paragraph (l) with a semicolon and adding the word ''and'' after the semicolon, and adding a new paragraph (n) to read as follows:

3. In the **Federal Register** issue of August 31, 1994, in the third column on page 44927, amendatory item 6 under part 416 should read as follows:

6. Section 416.1402 is amended by removing the word ''and'' following the semicolon at the end of paragraph (l) and adding a new paragraph (m) to read as follows:

§ 416.1402 Administrative actions that are initial determinations.

* * * * *

(m) A claim for benefits under § 416.351 based on alleged misinformation; and

* * * * *

Dated: March 7, 1995.

Neil J. Stillman,

Deputy Assistant Secretary for Information Resources Management.

[FR Doc. 95–6502 Filed 3–15–95; 8:45 am]

BILLING CODE 4190–29–M

Food and Drug Administration

21 CFR Part 510

Animal Drugs, Feeds, and Related Products; Change of Sponsor Name and Address

AGENCY: Food and Drug Administration, HHS.

ACTION: Final rule.

SUMMARY: The Food and Drug Administration (FDA) is amending the animal drug regulations to reflect a change of sponsor name and address for a new animal drug application (NADA) from Zoecon Industries, Inc., to Sandoz Agro, Inc.

EFFECTIVE DATE: March 16, 1995.

FOR FURTHER INFORMATION CONTACT: Benjamin A. Puyot, Center for Veterinary Medicine (HFV–130), Food and Drug Administration, 7500 Standish Pl., Rockville, MD 20855, 301–594–1646.

SUPPLEMENTARY INFORMATION: Due to a merger with Zoecon Industries, Inc., 12200 Denton Dr., Dallas, TX 75234, and Sandoz Agro, Inc., 1300 East Touhy Ave., Des Plaines, IL 60018, the firms have requested that FDA publish a notice of a change of sponsor name and address for their new animal drug application NADA 98–895, Starbar GX–118 (N-(mercaptomethyl) phthalimide S-(O,O dimethylphosphorodithioate) emulsifiable liquid). Accordingly, the agency is amending the regulations in 21 CFR 510.600(c)(1) and (c)(2) to reflect the change of sponsor name and address. The drug labeler code ''011536'' for Zoecon Industries, Inc., is being retained for the new sponsor.

List of Subjects in 21 CFR Part 510

Administrative practice and procedure, Animal drugs, Labeling, Reporting and record keeping requirements.

Therefore, under the Federal Food, Drug, and Cosmetic Act and under authority delegated to the Commissioner of Food and Drugs and redelegated to the Center for Veterinary Medicine, 21 CFR part 510 is amended as follows:

PART 510—NEW ANIMAL DRUGS

1. The authority citation for 21 CFR part 510 continues to read as follows:

Authority: Secs. 201, 301, 501, 502, 503, 512, 701, 721, of the Federal Food, Drug, and Cosmetic Act (21 U.S.C. 321, 331, 351, 352, 353, 360b, 371, 379e).

2. Section 510.600 is amended in the table in paragraph (c)(1) by removing the entry for ''Zoecon Industries, Inc.,'' and alphabetically adding a new entry for ''Sandoz Agro, Inc.,'' and in the table in paragraph (c)(2) in the entry for ''011536'' by revising the sponsor name and address to read as follows:

§ 510.600 Names, addresses, and drug labeler codes of sponsors of approved applications.

* * * * *

(c) * * *

(1) * * *

Firm name and address	Drug labeler code
* * * * *	
Sandoz Agro, Inc., 1300 East Touhy Ave., Des Plaines, IL 60018	011536
* * * * *	

(2) * * *

Drug labeler code	Firm name and address
* * * * *	
011536	Sandoz Agro, Inc., 1300 East Touhy Ave., Des Plaines, IL 60018
* * * * *	

Dated: March 8, 1995.

Robert C. Livingston,

Director, Office of New Animal Drug Evaluation, Center for Veterinary Medicine.

[FR Doc. 95–6528 Filed 3–15–95; 8:45 am]

BILLING CODE 4160–01–F

21 CFR Part 520

Oral Dosage Form New Animal Drugs; Lincomycin Hydrochloride Soluble Powder

AGENCY: Food and Drug Administration, HHS.

ACTION: Final rule.

SUMMARY: The Food and Drug Administration (FDA) is amending the animal drug regulations to reflect approval of a supplemental new animal drug application (NADA) filed by The Upjohn Co. The NADA provides for the use of lincomycin hydrochloride soluble powder to make medicated swine and broiler chicken drinking water. The supplement provides for use of a packet containing the equivalent of 32 grams (g) of lincomycin in addition to the currently approved packet containing the equivalent of 16 g of lincomycin.

EFFECTIVE DATE: March 16, 1995.

FOR FURTHER INFORMATION CONTACT: David R. Newkirk, Center for Veterinary Medicine (HFV–142), Food and Drug Administration, 7500 Standish Pl., Rockville, MD 20855, 301–594–2701.

SUPPLEMENTARY INFORMATION: The Upjohn Co., Kalamazoo, MI 49001, filed a supplement to NADA 111–636 for Lincomix (lincomycin hydrochloride) soluble powder. The supplemental NADA provides for the use of an 80-g packet containing the equivalent of 32 g of lincomycin in addition to the approved 40-g packet containing the equivalent of 16 g of lincomycin. Both packets are used to make a swine drinking water containing 250 milligrams (mg) of lincomycin per gallon used for the treatment of swine dysentery and broiler chicken drinking water containing 64 mg of lincomycin per gallon for the control of necrotic enteritis.

This supplemental NADA is approved as of February 9, 1995, and the regulations in § 520.1263c(a) (21 CFR 520.126c(a)) are amended to reflect the approval.

This is a manufacturing supplement to an approved NADA. The approval does not require a summary of safety, effectiveness data, or information. Therefore, a freedom of information summary as provided in part 20 (21 CFR part 20) and § 514.11(e)(2)(ii) (21 CFR 514.11(e)(2)(ii)) is not required.

Under section 512(c)(2)(F)(iii) of the Federal Food, Drug, and Cosmetic Act (21 U.S.C. 360b(c)(2)(F)(iii)), this approval for food-producing animals does not qualify for marketing exclusivity because the supplemental application does not contain new clinical or field investigations (other than bioequivalence or residue studies) and new human food safety studies (other than bioequivalence or residue studies) essential to the approval and conducted or sponsored by the applicant.

The agency has determined under 21 CFR 25.24(d)(1)(iii) that this action is of a type that does not individually or cumulatively have a significant effect on the human environment. Therefore, neither an environmental assessment nor an environmental impact statement is required.

List of Subjects in 21 CFR Part 520

Animal drugs.

Therefore, under the Federal Food, Drug, and Cosmetic Act and under

authority delegated to the Commissioner of Food and Drugs and redelegated to the Center for Veterinary Medicine, 21 CFR part 520 is amended as follows:

PART 520—ORAL DOSAGE FORM NEW ANIMAL DRUGS

1. The authority citation for 21 CFR part 520 continues to read as follows:

Authority: Sec. 512 of the Federal Food, Drug, and Cosmetic Act (21 U.S.C. 360b).

2. Section 520.1263c is amended by revising paragraph (a) to read as follows:

§ 520.1263c Lincomycin hydrochloride soluble powder.

(a) *Specifications.* Each 40-gram packet (1.41 ounce) contains lincomycin hydrochloride equivalent to 16 grams of lincomycin. Each 80-gram packet (2.82 ounces) contains lincomycin hydrochloride equivalent to 32 grams of lincomycin.

* * * * *

Dated: March 8, 1995.

Robert C. Livingston,

Director, Office of New Animal Drug Evaluation, Center for Veterinary Medicine.

[FR Doc. 95–6531 Filed 3–15–95; 8:45 am]

BILLING CODE 4160–01–F

---

21 CFR Part 520

Oral Dosage Form New Animal Drugs; Neomycin Sulfate Soluble Powder

AGENCY: Food and Drug Administration, HHS.

ACTION: Final rule.

SUMMARY: The Food and Drug Administration (FDA) is amending the animal drug regulations to reflect approval of an abbreviated new animal drug application (ANADA) filed by Sanofi Animal Health, Inc. The ANADA provides for the use of a generic neomycin sulfate soluble powder administered orally in drinking water or in milk for the treatment and control of colibacillosis in cattle (excluding veal calves), swine, sheep, and goats.

EFFECTIVE DATE: March 16, 1995.

FOR FURTHER INFORMATION CONTACT: Melanie R. Berson, Center for Veterinary Medicine (HFV–135), Food and Drug Administration, 7500 Standish Pl., Rockville, MD 20855, 301–594–1643.

SUPPLEMENTARY INFORMATION: Sanofi Animal Health, Inc., 7101 College Blvd., suite 610, Overland Park, KS 66210, filed ANADA 200–050, which provides for the oral use of neomycin sulfate soluble powder in drinking water or milk for cattle (excluding veal calves), swine, sheep, and goats for the treatment and control of colibacillosis (bacterial scours) caused by *Escherichia coli* susceptible to neomycin sulfate.

Approval of ANADA 200–050 is as a generic copy of The Upjohn's approved NADA 11–315 for Neomix® 325 soluble powder. The ANADA is approved as of February 15, 1995, and the regulations are amended by revising § 520.1484(b) (21 CFR 520.1484(b)) to reflect the approval. The basis for approval is discussed in the freedom of information summary.

In accordance with the freedom of information provisions of part 20 (21 CFR part 20) and § 514.11(e)(2)(ii) (21 CFR 514.11(e)(2)(ii)), a summary of safety and effectiveness data and information submitted to support approval of this application may be seen in the Dockets Management Branch (HFA–305), Food and Drug Administration, rm. 1–23, 12420 Parklawn Dr., Rockville, MD 20857, between 9 a.m. and 4 p.m., Monday through Friday.

The agency has carefully considered the potential environmental effects of this action. FDA has concluded that the action will not have a significant impact on the human environment, and that an environmental impact statement is not required. The agency's finding of no significant impact and the evidence supporting that finding, contained in an environmental assessment, may be seen in the Dockets Management Branch (address above) between 9 a.m. and 4 p.m., Monday through Friday.

List of Subjects in 21 CFR Part 520

Animal drugs.

Therefore, under the Federal Food, Drug, and Cosmetic Act and under authority delegated to the Commissioner of Food and Drugs and redelegated to the Center for Veterinary Medicine, 21 CFR part 520 is amended as follows:

PART 520—ORAL DOSAGE FORM NEW ANIMAL DRUGS

1. The authority citation for 21 CFR part 520 continues to read as follows:

Authority: Sec. 512 of the Federal Food, Drug, and Cosmetic Act (21 U.S.C. 360b).

2. Section 520.1484 is amended by revising paragraph (b) to read as follows:

§ 520.1484 Neomycin sulfate soluble powder.

* * * * *

(b) *Sponsors.* See Nos. 000009, 000069, 050604, and 059130 in § 510.600(c) of this chapter.

* * * * *

Dated: March 8, 1995.

Stephen F. Sundlof,

Director, Center for Veterinary Medicine.

[FR Doc. 95–6530 Filed 3–15–95; 8:45 am]

BILLING CODE 4160–01–F

---

21 CFR Part 522

Implantation or Injectable Dosage Form New Animal Drugs; Oxytetracycline Injection

AGENCY: Food and Drug Administration, HHS.

ACTION: Final rule.

SUMMARY: The Food and Drug Administration (FDA) is amending the animal drug regulations to reflect approval of an abbreviated new animal drug application (ANADA) filed by Phoenix Scientific, Inc. The ANADA provides for the use of oxytetracycline injection in cattle and swine for the treatment of diseases caused by oxytetracycline susceptible organisms.

EFFECTIVE DATE: March 16, 1995.

FOR FURTHER INFORMATION CONTACT: Melanie R. Berson, Center for Veterinary Medicine (HFV–135), Food and Drug Administration, 7500 Standish Pl., Rockville, MD 20855, 301–594–1643.

SUPPLEMENTARY INFORMATION: Phoenix Scientific, Inc., 3915 South 48th Street Terrace, P.O. Box 6457, St. Joseph, MO 64506–0457, has filed ANADA 200–123 which provides for use of oxytetracycline injection as follows: (1) Intramuscular or intravenous use in beef and nonlactating dairy cattle for the treatment of pneumonia and shipping fever associated with *Pasteurella* spp. and *Hemophilus* spp.; infectious bovine keratoconjunctivitis (pinkeye) caused by *Moraxella bovis*; foot rot and diphtheria caused by *Fusobacterium necrophorum*; bacterial enteritis (scours) caused by *Escherichia coli*; wooden tongue caused by *Actinobacillus lignieresi*; leptospirosis caused by *Leptospira pomona*; and wound infections and acute metritis caused by strains of staphylococci and streptococci organisms sensitive to oxytetracycline; (2) intramuscular use in swine for treatment of bacterial enteritis (scours, colibacillosis) caused by *E. coli*; pneumonia caused by *P. multocida*; and leptospirosis caused by *L. pomona*; and (3) intramuscular use in sows for control of infectious enteritis (baby pig scours, colibacillosis) in suckling pigs caused by *E. coli*.

Phoenix Scientific's ANADA 200–123 for oxytetracycline injection (Maxim 200) is approved as a generic copy of Pfizer's NADA 113–232 for oxytetracycline injection (Liquamycin®

LA–200). The ANADA is approved as of February 10, 1995, and the regulations are amended in 21 CFR 522.1660(b) and (c)(2)(iii) to reflect the approval. The basis for approval is discussed in the freedom of information summary.

In accordance with the freedom of information provisions of part 20 (21 CFR part 20) and § 514.11(e)(2)(ii) (21 CFR 514.11(e)(2)(ii)), a summary of safety and effectiveness data and information submitted to support approval of this application may be seen in the Dockets Management Branch (HFA–305), Food and Drug Administration, rm. 1–23, 12420 Parklawn Dr., Rockville, MD 20857, between 9 a.m. and 4 p.m., Monday through Friday.

The agency has carefully considered the potential environmental effects of this action. FDA has concluded that the action will not have a significant impact on the human environment, and that an environmental impact statement is not required. The agency's finding of no significant impact and the evidence supporting that finding, contained in an environmental assessment, may be seen in the Dockets Management Branch (address above) between 9 a.m. and 4 p.m., Monday through Friday.

List of Subjects in 21 CFR Part 522

Animal drugs.

Therefore, under the Federal Food, Drug, and Cosmetic Act and under authority delegated to the Commissioner of Food and Drugs and redelegated to the Center for Veterinary Medicine, 21 CFR part 522 is amended as follows:

PART 522—IMPLANTATION OR INJECTABLE DOSAGE FORM NEW ANIMAL DRUGS

1. The authority citation for 21 CFR part 522 continues to read as follows:

Authority: Sec. 512 of the Federal Food, Drug, and Cosmetic Act (21 U.S.C. 360b).

2. Section 522.1660 is amended in paragraph (b) by removing the phrase ''000010 and 000069'' and adding in its place ''000010, 000069, and 059130'', and in paragraph (c)(2)(iii) by revising the last sentence to read as follows:

§ 522.1660 Oxytetracycline injection.

* * * * *

(c) * * *

(2) * * *

(iii) * * * Discontinue treatment at least 42 days prior to slaughter when provided by 000010 and 28 days prior to slaughter when provided by 000069 or 059130.

Dated: March 8, 1995.

Stephen F. Sundlof,

Director, Center for Veterinary Medicine.

[FR Doc. 95–6527 Filed 3–15–95; 8:45 am]

BILLING CODE 4160–01–F

DEPARTMENT OF LABOR

Occupational Safety and Health Administration

29 CFR Part 1915

[Docket No. S–050]

Confined and Enclosed Spaces and Other Dangerous Atmospheres in Shipyard Employment

AGENCY: Occupational Safety and Health Administration (OSHA), Department of Labor.

ACTION: Final rule; correction.

SUMMARY: In the July 25, 1994, **Federal Register** OSHA published a revised standard for Shipyard Employment, subpart B of 29 CFR part 1915, extending the previous requirements for work in explosive and other dangerous atmospheres on ships to cover all work involving confined or enclosed spaces or other dangerous atmospheres throughout shipyard employment (59 FR 37816). With the present document, OSHA is making corrections to the rule which include: clarifying the order of testing before employees may enter a confined or enclosed space or other dangerous atmosphere; clarifying when flammable atmospheres must be maintained above the upper explosive limit during installation of ventilation or rescue; and clarifying the limited locations and conditions where hot work may be performed without first being certified by a Marine Chemist. Several typographical errors are also being corrected.

EFFECTIVE DATE: The final rule published on July 25, 1994, became effective on October 24, 1994. These corrections are effective March 16, 1995.

FOR FURTHER INFORMATION CONTACT: Richard Liblong, Director, Office of Information and Consumer Affairs, Occupational Safety and Health Administration, Room N3647, U.S. Department of Labor, 200 Constitution Ave., N.W., Washington, D.C. 20210 (202–219–8148).

SUPPLEMENTARY INFORMATION:

I. Correction to § 1915.12—Precautions Before Entering Confined and Enclosed Spaces and Other Dangerous Atmospheres

OSHA is correcting the section heading to § 1915.12 to make clearer the requirement that atmospheric testing must be done in the order set forth in the standard (i.e., oxygen content, then flammability, and then toxicity).

In the preamble to the final rule OSHA explained how the section was being reformatted to address the order of atmospheric testing to be conducted when determining hazards within confined and enclosed spaces and other dangerous atmospheres prior to entry (59 FR 37830). The Agency stated explicitly in the preamble to paragraphs (a), (b), and (c) of § 1915.12 that atmospheres must be tested for oxygen content first, flammability second, and toxicity third (59 FR 37831). However, the section heading did not include the sequence of testing, and the specific introductory statement requiring atmospheric testing to be conducted in the proper sequence was inadvertently omitted from the regulatory text. The insertion of the sequence of testing into the section heading and the addition of the introductory text to § 1915.12 brings the section into conformance with the rulemaking record, the preamble explanation, and OSHA's intent.

II. Correction to § 1915.12(b)—Flammable Atmospheres

In the previous standard covering entry into spaces containing flammable atmospheres, § 1915.12(d), employees were allowed to perform work of brief duration in atmospheres containing concentrations of flammable contaminants as long as the concentrations remained above the upper explosive limit (UEL) and the requirements of § 1915.152(a) and (b), *Respiratory protection,* were followed. That allowance was continued in the proposed revision to subpart B, § 1915.12(d), *Work of brief duration* (53 FR 48108). In the final standard, which permits such entry only to set up ventilation or for rescue, OSHA carried over the condition that the flammable contaminant(s) be maintained above the UEL (59 FR 37858). Unfortunately, the wording of this condition could be construed to require that levels of atmospheric contaminants in a space actually be increased to a level above the UEL prior to ventilation start-up or rescue so that they may be maintained above the UEL. OSHA did not intend the rule to require this. When the atmosphere is below the UEL (but above

the lower explosive limit) the addition of flammable contaminants to a space prior to rescue or ventilation set-up to exceed the UEL could increase both the atmospheric hazards to employees and the time needed for rescue. Only atmospheres that are already at or above the UEL are to be maintained at those levels. To prevent confusion regarding when an employer must maintain the level of contaminants above the UEL, OSHA is correcting § 1915.12(b)(3)(iii).

III. Correction to § 1915.14—Hot Work

In paragraph (a)(1)(iv) of § 1915.14, OSHA has provided an exception to the general rule that certain atmospheres in spaces must be tested and certified by a Marine Chemist before hot work may be done. The exception provides that some atmospheres where hot work is to be performed may, instead, be tested by a Competent Person. OSHA is correcting the exception to specify the spaces to which the exception applies and adding a note for further clarification.

It was OSHA's intent to extend the requirements of existing subpart B to all shipyard employment, making changes only where necessary to clarify the language and correct requirements that were inappropriate. In bringing forward the requirements on hot work, however, OSHA incorrectly omitted the reference to the scope of the existing exception which included dry cargo, miscellaneous and passenger vessels. The exception did not apply to tank vessels because of the seriousness of the hazards associated with the flammability or combustibility of tanker vessel cargo. However, OSHA intended the dry cargo, miscellaneous and passenger vessels exception to apply to all landside spaces as well, because their configuration and the conditions found within these spaces are similar to those on the dry cargo, miscellaneous and passenger vessels. Therefore, OSHA is correcting the paragraph to make it clear that the exception does not apply to hot work performed on tank vessels. This is consistent with the previous standard and OSHA's intent.

OSHA has also added a note to make it clear that hot work which does not need to be certified by a Marine Chemist (i.e., work in spaces adjacent to spaces that contain liquids with a flash point above 150° F (65.6° C)) still needs to be inspected and tested by a competent person prior to beginning the hot work.

IV. Correction to § 1915.15(e)

In § 1915.15(e), OSHA requires testing to maintain a competent person's findings. In order to make it clear that a visual inspection is part of the testing, OSHA is correcting paragraph (e). This is consistent with the testing requirements throughout the standard, the rulemaking record, the preamble explanation, and OSHA's intent.

V. Typographical Corrections

Two provisions in subpart B of part 1915 contained minor typographical errors. They are § 1915.12 (d)(3)(ii) and (e)(1)(iii).

PART 1915—[CORRECTED]

1. The authority citation for part 1915 continues to read as follows:

Authority: Sec. 41, Longshore and Harbor Workers' Compensation Act (33 U.S.C. 941); secs. 4,6,8, Occupational Safety and Health Act of 1970 (29 U.S.C. 653, 655, 657); Sec. 4 of the Administrative Procedure Act (5 U.S.C. 553); Secretary of Labor's Order No. 12–71 (36 FR 8754), 8–76 (41 FR 25059), 9–83 (48 FR 35736), or 1–90 (55 FR 9033) as applicable; 29 CFR Part 1911.

2. The text of 29 CFR part 1915, beginning at § 1915.12, 59 FR 37858 is corrected as follows:

	Page, column	Correction
§ 1915.12		
Section heading	59 FR 37858, 1st	The section heading is corrected to read as follows: ''Precautions and the order of testing before entering confined and enclosed spaces and other dangerous atmospheres.''
Introductory text	59 FR 37858, 1st	Add the following new introductory text after the section heading: ''The employer shall ensure that atmospheric testing is performed in the following sequence: oxygen content, flammability, toxicity.''
Paragraph (b)(3)(iii)	59 FR 37858, 3rd	This paragraph is corrected to read as follows: ''(iii) Atmospheres at or above the upper explosive limit are maintained; and''
Paragraph (d)(3)(ii)	59 FR 37859, 1st	The word ''a'' that appears at the end of the first line is corrected to read ''an''.
Note to paragraph (e)(1)(iii)	59 FR 37859, 2nd (sixth paragraph second line).	The word ''preforms'' that appears at the beginning of the second line is corrected to read ''performs''.
§ 1915.14		
Paragraph (a)(1)(iv)	59 FR 37860, 2nd	This paragraph is corrected to read as follows: ''Exception: On dry cargo, miscellaneous and passenger vessels and in the landside operations within spaces which meet the standards for oxygen, flammability and toxicity in § 1915.12, but are adjacent to spaces containing flammable gases or liquids, as long as the gases or liquids have a flash point below 150° F (65.6° C) and the distance between such spaces and the work is 25 feet (7.5m) or greater.'' Note: For flammable liquids with flash points above 150° F (65.6° C), see paragraph (b) of this section.
§ 1915.15		
Paragraph (e)	59 FR 37861, 1st	Correct the paragraph to read as follows: ''(e) Tests to maintain a competent person's findings. After a competent person has conducted a visual inspection and tests required in §§ 1915.12, 1915.13, and 1915.14 of this part and determined a space to be safe for an employee to enter, he or she shall continue to test and visually inspect spaces as often as necessary to ensure that the required atmospheric conditions within the tested space are maintained.''

VI. Authority

This document was prepared under the direction of Joseph A. Dear, Assistant Secretary of Labor for the Occupational Safety and Health Administration, U.S. Department of Labor, 200 Constitution Avenue, N.W., Washington, D.C. 20210.

List of Subjects in 29 CFR Part 1915

Confined spaces, Emergency medical services, Hazardous substances, Marine

safety, Occupational Safety and Health, Signs and symbols, Vessels, Welding.

The actions in this document are taken pursuant to sections 4, 6, and 8 of the Occupational Safety and Health Act of 1970 (29 U.S.C. 653, 655, 657), Secretary of Labor's Order No. 1–90 (55 FR 9033), and 29 CFR Part 1911.

Joseph A. Dear,

Assistant Secretary of Labor.

[FR Doc. 95–6526 Filed 3–15–95; 8:45 am]

BILLING CODE 4510–26–P

DEPARTMENT OF TRANSPORTATION

Coast Guard

33 CFR Part 110

[CGD07–93–035]

RIN 2115–AA98

Anchorage Ground; St. Johns River, Jacksonville, FL

AGENCY: Coast Guard, DOT.

ACTION: Final rule.

SUMMARY: The Coast Guard is changing the anchorage grounds for the St. Johns River, Jacksonville, FL to disestablish anchorage grounds with poor bottom holding capabilities and to disestablish the portions of anchorage grounds which currently extend into the federal channel. This change will also clearly define the anchorage grounds currently in use in the St. Johns River and will delete outdated information contained in the regulation.

EFFECTIVE DATE: April 17, 1995.

FOR FURTHER INFORMATION CONTACT: Lieutenant Commander William Daughdrill, Tel: (904) 232–2648.

SUPPLEMENTARY INFORMATION: On July 15, 1993 the Coast Guard published a notice of proposed rulemaking in the **Federal Register** for these regulations (58 FR 38102). Interested persons were requested to submit comments and no comments were received.

Drafting Information

The drafters of these regulations are Lieutenant A.J. Varamo, project officer for the Caption of the Port Jacksonville, Florida, and Lieutenant J. Losego, project attorney, Seventh Coast Guard District Legal Office.

Discussion of Comments

No comments were received for this regulation during the comment period. Captain of the Port Jacksonville is removing the word 'General' from 33 CFR Part 110.183(b) (2), (3), and (4). There is no regulatory definition for the word, and it is unnecessary.

This regulation is issued pursuant to 33 U.S.C. 471 as set out in the authority citation for all of Part 110.

Federalism

This action has been analyzed in accordance with the principles and criteria contained in Executive Order 12612, and it has been determined that the proposed rulemaking does not have sufficient federalism implications to warrant the preparation of a Federalism Assessment.

Environmental Assessment

The Coast Guard has considered the environmental impact of this action and has determined pursuant to Section 2.B.2.e.(34)(f) that this action is categorically excluded from further environmental documentation. A Categorical Exclusion Determination and Environmental Analysis Checklist are available in the docket for inspection or copying.

Regulatory Evaluation

This proposal is not a significant regulatory action under section 3(f) of Executive Order 12866 and does not require an assessment of potential costs and benefits under section 6(a)(3) of that order. It has been exempted from review by the Office of Management and Budget under that order. It is not significant under the regulatory policies and procedures of the Department of Transportation (DOT) (44FR 11040; February 26, 1979). The Coast Guard expects the economic impact of this proposal to be so minimal that a full Regulatory Evaluation under paragraph 10e of the regulatory policies and procedures of DOT is unnecessary. The proposed anchorage grounds described in these regulations have been used for the past three years by the local pilots, vessel operators and other maritime interests. This change will assure that current practices are in accordance with the regulation.

Since the impact of this proposal is expected to be minimal, the Coast Guard certifies that, if adopted, it will not have a significant economic impact on a substantial number of small entities.

List of Subjects in 33 CFR Part 110

Anchorage grounds.

Final Regulations

In consideration of the foregoing, Part 110 of Title 33, Code of Federal Regulations, is amended as follows:

1. The authority citation for Part 110 continues to read as follows:

Authority: 33 U.S.C. 471, 2030, 2035, and 2071; 49 CFR 1.46 and 33 CFR 1.05–1(g). Section 110.1a and each section listed in 110.1a are also issued under 33 U.S.C. 1223 and 1231.

2. Section 110.183 is revised to read as follows:

§ 110.183 St. Johns River, Florida.

(a) *The anchorage grounds*—(1) *Anchorage A.* (Upper Anchorage) The Anchorage is established within the following coordinates, the area enclosed by a line starting at the south shore westerly of the entrance to Miller Creek at

30°18′43.8″ N, 081°38′15.0″ W; thence to
30°18′52.8″ N, 081°38′15.0″ W; thence to
30°18′47.6″ N, 081°37′47.6″ W; thence to
30°18′55.0″ N, 081°37′29.0″ W; thence to
30°19′06.0″ N, 081°37′27.0″ W; thence to
30°19′06.0″ N, 081°37′02.0″ W; thence to
30°19′01.2″ N, 081°37′02.0″ W; thence returning to the point of beginning.

(2) *Anchorage* B. (Lower Anchorage) The Anchorage is established within the following coordinates, the area enclosed by a line starting at a point on the eastern shore of the river at 'Floral Bluff' at

30°21′00.0″ N, 081°36′41.0″ W; thence to
30°20′00.0″ N, 081°37′03.0″ W; thence to
30°21′00.0″ N, 081°37′06.0″ W; thence to
30°21′50.0″ N, 081°36′56.0″ W; thence to
30°21′54.0″ N, 081°36′48.0″ W; thence returning to the point of beginning.

(b) *The regulations.* (1) Except in cases of emergency or for temporary anchorage as authorized in the following subsections, vessels must have authorization from the Captain of the Port to anchor in the St. Johns River, as depicted on NOAA chart 11491, between the entrance buoy (STJ) and the Main Street Bridge (latitude 30°19′20″ N, longitude 81°39′32″ W).

(2) Anchoring within Anchorage A is restricted to vessels less than 250 feet in length.

(3) Anchoring within Anchorage B is restricted to vessels with a draft of 24 feet or less regardless of length.

(4) Anchorages A and B are temporary anchorages. Vessels meeting the applicable restrictions of subsection (b)(2) or (b)(3) of this section may anchor for up to 24 hours without a permit from the Captain of the Port. Vessels not meeting the applicable restrictions of subsection (b)(2) or (b)(3) must obtain authorization from the

Captain of the Port before anchoring in Anchorages A or B.

Dated: January 10, 1995.

William P. Leahy,

Rear Admiral, U.S. Coast Guard Commander, Seventh Coast Guard District.

[FR Doc. 95–6435 Filed 3–15–95; 8:45 am]

BILLING CODE 4910–14–M

---

33 CFR Part 117

[CGD8–94–027]

RIN 2115–AE47

Drawbridge Operation Regulations; Mermentau River, LA

AGENCY: Coast Guard, DOT.

ACTION: Final rule.

SUMMARY: At the request of the Louisiana Department of Transportation and Development (LDOTD), the Coast Guard is changing the regulation governing the operation of the swing span bridge on State Route 82, across the Mermentau River, mile 7.1, at Grand Chenier, Cameron Parish, Louisiana, by permitting the draw to open on signal from 6 a.m. to 6 p.m. and open on four hours notice from 6 p.m. to 6 a.m. Presently, the draw is required to open on signal from 5 a.m. to 9 p.m. and from 9 p.m. to 5 a.m. the bridge opens on 4 hours notice. This action will provide relief to the bridge owner, thereby creating a savings to the taxpayer, and still provide for the reasonable needs of navigation.

EFFECTIVE DATE: This regulation becomes effective on April 17, 1995.

ADDRESSES: Unless otherwise indicated, documents referred to in this preamble are available for inspection or copying at the office of the Commander (ob), Eighth Coast Guard District, 501 Magazine Street, Room 1313, New Orleans, Louisiana 70130–3396, between 8 a.m. and 3 p.m., Monday through Friday, except Federal holidays. The telephone number is (504) 589–2965.

FOR FURTHER INFORMATION CONTACT: Mr. John Wachter, Bridge Administration Branch, at the address given above, telephone (504) 589–2965.

SUPPLEMENTARY INFORMATION:

Drafting Information

The drafters of this regulation are Mr. John Wachter, project officer, and LT Elisa Holland, project attorney.

Regulatory History

On October 4, 1994, the Coast Guard published a notice of proposed rulemaking entitled Drawbridge Operation Regulation; Mermentau River, LA, in the **Federal Register** (59 FR 50529). The Coast Guard received three letters commenting on the proposal. No public hearing was requested, and none was held.

Background and Purpose

LDOTD requested the 4 hour reduction in the number of hours the bridge owner is required to have an attendant on duty, due to the small number of vessels which use the Mermentau River bridge. Data provided by LDOTD show that from January 1, through December 31, 1993, the number of vessels broke down to 8.0 vessels per 24 hour period. The four hour reduction will allow the bridge owner relief from having a person available at the bridge site during that period, thereby, creating a savings to the taxpayer while still serving the reasonable needs of navigational interests.

Discussion of Comments and Changes

Three letters of comment were received in response to the proposal. The Federal Emergency Management Agency, the National Marine Fisheries Service and the Louisiana Department of Wildlife & Fisheries offered no objection to the rule change. Therefore, the Final Rule remains unchanged from the Proposed Rule.

Assessment

This regulation is not a significant regulatory action under Section 3(f) of Executive Order 12866 and does not require an assessment of potential cost and benefits under Section 6a(3) of that order. It has not been reviewed by the Office of Management and Budget under that order. It is not significant under the regulatory policies and procedures of the Department of Transportation (DOT) (44 FR 11040: February 26, 1979).

Small Entities

The economic impact has been found to be so minimal that a full regulatory evaluation is unnecessary. The basis for this conclusion is the number of vessels which pass the bridge, (8.0 per 24 hour period). The three comments received offered no objection to the proposed rule. Therefore, the Coast Guard certifies under section 605(b) of the Regulatory Flexibility Act (5 U.S.C. 601 *et seq.*) that this rule will not have a significant economic impact on a substantial number of small entities.

Collection of Information

This rule contains no collection-of-information requirements under the Paperwork Reduction Act (44 U.S.C. 3501 *et seq.*).

Federalism

This action has been analyzed in accordance with the principles and criteria contained in Executive Order 12612, and it has been determined that the final rulemaking does not have sufficient federalism implications to warrant the preparation of a Federalism Assessment.

Environment

This rulemaking has been thoroughly reviewed by the Coast Guard and it has been determined to be categorically excluded from further environmental documentation in accordance with section 2.B.2.g.5 of Commandant Instruction M16475.1B. A Categorical Exclusion Determination statement has been prepared and placed in the rulemaking docket.

List of Subjects in 33 CFR Part 117

Bridges.

Regulations

In consideration of the foregoing, Part 117 of Title 33, Code of Federal Regulations, is amended as follows:

PART 117—DRAWBRIDGE OPERATION REGULATIONS

1. The authority citation for Part 117 continues to read as follows:

Authority: 33 U.S.C. 499; 49 CFR 1.46; 33 CFR 1.05–1(g).

2. Section 117.480 is revised to read as follows:

§ 117.480 Mermentau River.

The draw of the S82 bridge, mile 7.1 at Grand Chenier, shall open on signal; except that, from 6 p.m. to 6 a.m. the draw shall open on signal if at least 4 hours notice is given. During the advance notice period, the draw will open on less than 4 hours notice for an emergency and will open on demand should a temporary surge in waterway traffic occur.

Dated: February 1, 1995.

C.B. Newlin,

Acting Captain, U.S. Coast Guard, Chief of Staff.

[FR Doc. 95–6434 Filed 3–15–95; 8:45 am]

BILLING CODE 4910–14–M

DEPARTMENT OF VETERANS AFFAIRS

38 CFR Part 3

RIN 2900–AH44

Compensation for Disability Resulting From Hospitalization, Treatment, Examination, or Vocational Rehabilitation

AGENCY: Department of Veterans Affairs.

ACTION: Interim final rule with request for comments.

SUMMARY: This document amends Department of Veterans Affairs (VA) adjudication regulations concerning compensation for disability or death resulting from VA hospitalization, medical or surgical treatment, or examination. Previously, the regulations required that VA be at fault or that an accident occur to establish entitlement to compensation for adverse results of medical or surgical treatment. This rule deletes the fault-or-accident requirement and instead provides that compensation is not payable for the necessary consequences of proper treatment to which the veteran consented. This amendment is necessary to conform the regulations to a recent United States Supreme Court decision.

DATES: This interim final rule is effective November 25, 1991, the date of the Court of Veterans Appeals decision that invalidated former 38 CFR 3.358(c)(3). Comments must be received on or before May 15, 1995.

ADDRESSES: Mail written comments to: Director, Office of Regulations Management (02D), Department of Veterans Affairs, 810 Vermont Avenue NW., Washington, DC 20420; or hand deliver written comments to: Office of Regulations Management, Room 1176, 801 Eye Street NW., Washington, DC 20001. Comments should indicate that they are submitted in response to ''RIN 2900–AH44.'' All written comments received will be available for public inspection in the Office of Regulations Management, Room 1176, 801 Eye Street NW., Washington, DC 20001, between the hours of 8 a.m. and 4:30 p.m., Monday through Friday (except holidays).

FOR FURTHER INFORMATION CONTACT: Paul Trowbridge, Consultant, Regulations Staff, Compensation and Pension Service, Veterans Benefits Administration, 810 Vermont Avenue NW., Washington, DC 20420, telephone (202) 273–7210.

SUPPLEMENTARY INFORMATION: 38 U.S.C. 1151 provides for the payment of disability or dependency and indemnity compensation for additional disability or death resulting from an injury or aggravation of an injury suffered as the result of VA hospitalization, medical or surgical treatment, examination, or pursuit of a course of vocational rehabilitation under 38 U.S.C. ch. 31. VA had long interpreted the statute to require a showing of fault on the part of VA or the occurrence of an accident to establish entitlement to § 1151 compensation for adverse consequences of VA medical treatment. *See* 38 CFR 3.358(c)(3) (1994). The Supreme Court, however, recently affirmed a lower court ruling that invalidated VA's fault-or-accident interpretation.

In deciding *Brown* v. *Gardner,* U.S. Sup. Ct. No. 93–1128 (Dec. 12, 1994), the Court held that the fault-or-accident requirement in 38 CFR 3.358(c)(3) was inconsistent with the plain language of the statute and that no fault requirement was implicit in the statute.

Although the Supreme Court found that the statutory language simply requires a causal connection between an injury or aggravation of an injury and VA hospitalization, medical or surgical treatment, examination, or vocational rehabilitation, it also indicated that not every additional disability resulting from an injury or aggravation so connected was compensable under § 1151. The Court noted that it did not intend to exclude application of the doctrine *volenti non fit injuria* (which is sometimes loosely translated as ''assumption of the risk'' but more precisely refers to the doctrine of consent). Moreover, the Court provided an example of disabilities that, although causally connected to VA treatment, are not compensable under § 1151. In this regard, the Court stated, ''[i]t would be unreasonable, for example, to believe that Congress intended to compensate veterans for the necessary consequences of treatment to which they consented (*i.e.,* compensating a veteran who consents to the amputation of a gangrenous limb for the loss of the limb).''

Under the authority granted in 38 U.S.C. 505, the Secretary of Veterans Affairs requested an opinion from the U.S. Attorney General on precisely what the Supreme Court meant by its statement regarding application of the doctrine *volenti non fit injuria.* The response, from the Department of Justice's Office of Legal Counsel, was that the Court construed § 1151 to exclude from coverage only those injuries that are the certain, or perhaps the very nearly certain, result of proper medical treatment.

In this document VA is revising 38 CFR 3.358(c)(3) to reflect the Supreme Court's holding that 38 U.S.C. 1151 permits compensation for all but the necessary consequences of properly administered VA medical or surgical treatment or examination to which a veteran consented. ''Necessary consequences'' is the term the Supreme Court used in its example of what Congress could not reasonably have intended to cover with § 1151. We define ''necessary consequences'' as those consequences certain or intended to result from treatment or examination. We consider this interpretation of the statute to be consistent with the Supreme Court's opinion.

Consistent with our interpretation of the Supreme Court's opinion, this rule also provides that whether results were either certain or intended is to be determined in relation to the examination or treatment actually administered. Consequences otherwise certain or intended to result from a treatment will not be considered uncertain or unintended solely because it had not been determined at the time consent was given whether that treatment would in fact be administered. For example, consider a case in which a veteran is about to undergo exploratory surgery and, depending on the findings, would undergo one of two possible additional procedures, each of which has distinct consequences that are certain or intended to result. Under these circumstances it is not known before the exploratory surgery which additional procedure will actually be performed. However, if the veteran consents both to the exploratory surgery and whichever procedure ultimately is determined to be required, the certainty of consequences is to be determined in relation to the consented-to procedure or procedures actually performed.

Also, as reflected in the text of the rule, we have concluded that when the Supreme Court stated that compensation should not be payable for the necessary consequences of treatment to which the veteran ''consented,'' the Court meant both express and implied consent. This is consistent with the common meaning of the term ''consent'' and the Court did not indicate that any other meaning should be applied.

This interim final rule, unlike the regulatory provision it replaces, expressly includes the consequences of VA examinations. The statute covers injuries or aggravation of injuries resulting from examination, as well as from medical or surgical treatment. Thus, the rule's inclusion of examination consequences is necessary

to reflect completely the provisions of the statute.

We also are deleting other references in the section to the invalidated fault requirement. We are eliminating paragraph (c)(4), which requires that VA be at fault to establish entitlement for claims based on being transported while in hospitalized status. Such claims will now be adjudicated under the standard applicable to hospitalization, treatment, or examination. We are also making corresponding changes to paragraph (c)(7) to remove the fault requirement for claims based on nursing home care.

The Secretary hereby certifies that this interim final rule will not have a significant economic impact on a substantial number of small entities as they are defined in the Regulatory Flexibility Act (5 U.S.C. 601–612). This rule will directly affect VA beneficiaries but will not affect small businesses. Therefore, pursuant to 5 U.S.C. 605(b), this rule is exempt from the initial and final regulatory flexibility analysis requirements of section 603 and 604.

The Office of Management and Budget has reviewed this regulatory action under Executive Order 12866.

The Catalog of Federal Domestic Assistance program number is 64.109.

List of Subjects in 38 CFR Part 3

Administrative practice and procedure, Claims, Health care, Individuals with disabilities, Pensions, Veterans.

Approved: February 23, 1995.

Jesse Brown,

Secretary of Veterans Affairs.

For the reasons set forth in the preamble, 38 CFR Part 3 is amended as set forth below:

PART 3—ADJUDICATION

Subpart A—Pension, Compensation, and Dependency and Indemnity Compensation

1. The authority citation for part 3, subpart A, continues to read as follows:

Authority: 38 U.S.C. 501(a), unless otherwise noted.

2. In § 3.358, paragraph (c)(4) is removed, and paragraphs (c)(5), (c)(6), and (c)(7) are redesignated as paragraphs (c)(4), (c)(5), and (c)(6), respectively.

3. In § 3.358, paragraph (c)(3) is revised, and redesignated paragraph (c)(6) is amended by revising the third sentence, to read as follows:

§ 3.358 Determinations for disability or death from hospitalization, medical or surgical treatment, examinations or vocational rehabilitation training (§ 3.800).

* * * * *

(c) * * *

(3) Compensation is not payable for the necessary consequences of medical or surgical treatment or examination properly administered with the express or implied consent of the veteran, or, in appropriate cases, the veteran's representative. ''Necessary consequences'' are those which are certain to result from, or were intended to result from, the examination or medical or surgical treatment administered. Consequences otherwise certain or intended to result from a treatment will not be considered uncertain or unintended solely because it had not been determined at the time consent was given whether that treatment would in fact be administered.

* * * * *

(6) * * * If additional disability results from medical or surgical treatment or examination through negligence or other wrongful acts or omissions on the part of such a nursing home, its employees, or its agents, entitlement does not exist under this section unless there was an act or omission on the part of the Department of Veterans Affairs independently giving rise to such entitlement and such acts on the part of both proximately caused the additional disability.

(Authority: 38 U.S.C. 1151)

[FR Doc. 95–6510 Filed 3–15–95; 8:45 am]

BILLING CODE 8320–01–P

DEPARTMENT OF HEALTH AND HUMAN SERVICES

Health Care Financing Administration

42 CFR Part 410

[BPD–724–F]

RIN 0938–AF26

Medicare Program; Medicare Coverage of Screening Mammography; Correction

AGENCY: Health Care Financing Administration (HCFA), HHS.

ACTION: Correcting amendment.

SUMMARY: This document corrects a technical error that appeared in the final regulations published in the **Federal Register** on September 30, 1994 (59 FR 49826). Those regulations, in part, established conditions for coverage of diagnostic mammography that are similar to those we had established for screening mammography. This correcting amendment restates the applicability of diagnostic mammography to men as well as to women.

EFFECTIVE DATE: October 1, 1994.

FOR FURTHER INFORMATION CONTACT: William Larson, (410) 966–4639.

SUPPLEMENTARY INFORMATION: This document corrects a technical error that appeared in the final regulations published in **Federal Register** Document [94–24335] on September 30, 1994 (59 FR 49826). Those regulations, in part, established conditions for coverage of diagnostic mammography that are similar to those we had established for screening mammography.

The regulation set forth at 42 CFR 410.34 (''Mammography services: Conditions for and limitations on coverage'') contains an omission, which may prove to be misleading. In the definition of ''diagnostic mammography'' in paragraph (a)(1) of § 410.34, we inadvertently failed to include a symptomatic man in the coverage of services under the diagnostic mammography benefit. This correcting amendment restates the applicability of diagnostic mammography to men as well as to women. Therefore, we are correcting § 410.34(a)(1) to clarify that a symptomatic man or woman can receive coverage of services under the diagnostic mammography benefit.

We wish to note that section 1861(jj) of the Social Security Act states explicitly that ''screening'' mammography is covered only for women. Section 410.34(a)(2), relating to the definition of screening mammography, is correct as it reads, based on current law.

List of Subjects in 42 CFR Part 410

Health facilities, Health professions, Kidney diseases, Laboratories, Medicare, Rural areas, X-rays.

Accordingly, 42 CFR part 410 is corrected by making the following correcting amendment:

PART 410—[AMENDED]

1. The authority citation for part 410 continues to read as follows:

Authority: Secs. 1102 and 1871 of the Social Security Act (42 U.S.C. 1302 and 1395hh).

2. In § 410.34, the introductory text of paragraph (a) is republished, and paragraph (a)(1) is revised to read as follows:

§ 410.34 Mammography services: Conditions for and limitations on coverage.

(a) *Definitions.* As used in this section, the following definitions apply:

(1) *Diagnostic mammography* means a radiologic procedure furnished to a symptomatic man or woman for the purpose of detecting breast disease and includes a physician's interpretation of the results of the procedure.

* * * * *

(Catalog of Federal Domestic Assistance Program No. 93.774, Medicare—Supplementary Medical Insurance)

Dated: March 7, 1995.

Neil J. Stillman,

Deputy Assistant Secretary for Information Resources Management.

[FR Doc. 95–6501 Filed 3–15–95; 8:45 am]

BILLING CODE 4120–01–P

FEDERAL COMMUNICATIONS COMMISSION

47 CFR Part 74

[MM Docket No. 93–154; FCC 95–69]

Aural Broadcast Station Auxiliary Facilities

AGENCY: Federal Communications Commission.

ACTION: Final rule.

SUMMARY: This document adopts rules to permit certain unapproved transmitters to be retained and used for backup operations in the band 944–952 MHz at aural broadcast stations' auxiliary facilities. The rule will permit broadcast licensees to temporarily use their outmoded equipment, which has been displaced from full time operation by approved equipment, for backup operations at auxiliary facilities.

EFFECTIVE DATE: April 17, 1995.

FOR FURTHER INFORMATION CONTACT: Bernard Gorden, Mass Media Bureau, (202) 418–2190.

SUPPLEMENTARY INFORMATION: Adopted: February 24, 1995; Released: March 7, 1995 By the Commission:

Introduction

1. We herein amend Sections 74.550 of our rules to permit certain unapproved transmitters in the band 944–952 MHz which have been displaced by approved equipment for primary use to be retained for backup purposes at Aural Broadcast Auxiliary Stations.

Background

2. In 1985, the Commission adopted a *Report and Order* in MM Docket No. 85–36, 50 FR 48596, January 26, 1985, which required all new transmitters for aural studio transmitter-link/intercity relay (STL/ICR) operation in the 944–952 MHz frequency band to be approved prior to marketing. Continued use of existing non-approved equipment was allowed for a period ending on July 1, 1990, which was later extended to July 1, 1993, 55 FR 3062, January 30, 1990.

3. In June of 1993, the Notice of Proposed Rule Making in MM Docket No. 93–154, 58 FR 33923, June 22, 1993, (''NPRM'') in the above-entitled matter was issued in response to informal suggestions from various parties that the Commission should permit the retention and use of existing unapproved aural broadcast auxiliary transmitters for backup purposes. This proposal would permit broadcasters to retain and use their existing unapproved primary equipment as backup equipment after it was displaced from primary service by approved equipment under the requirements of our rules. The proposal was intended to avoid burdening licensees with additional expenditures to replace infrequently used backup transmitters with approved equipment, and to permit the installation of backup facilities in situations which have not previously been practicable. Backup auxiliary service facilities are used by many broadcast station licensees to avoid undue disruption in programming should the regular auxiliary transmitter fail or require servicing. Thus, the Commission concluded that limited short-term backup use of unapproved equipment could be permitted. The Commission, therefore, proposed to allow all transmitters removed from primary service to be retained for backup purposes, provided no interference is caused and that such transmitters are not used for more than 720 cumulative hours per year without explicit Commission authority.[1] In addition, the *NPRM* stated that the Commission would allow licensees to retain unapproved equipment for backup purposes until final action is taken in this proceeding, and thereafter if the proposed rule is adopted.

Comments

4. Comments supporting adoption of the proposed amendments of Section 74.550 were received from the National Association of Broadcasters (''NAB'') and National Public Radio (''NPR''). No opposing comments were received.

5. NAB states that many stations have purchased new equipment to comply with the current requirements of Section 74.550 of the Commission's rules. NAB notes that given the current financial conditions prevailing in the broadcast industry, most licensees cannot justify purchasing additional equipment for backup facilities. However, while their old equipment does not meet the new more stringent standards, NAB and NPR suggest the old equipment is fully functional and is more than adequate for backup purposes.

Discussion

6. We have reviewed the comments and conclude for the reasons advanced in the NPRM that adoption of the proposal would serve the public interest. We further agree with NPR that there should not be any significant adverse consequences from continued use of unapproved STL/ICR equipment under the conditions proposed in the NPRM. These backup transmitters can maintain the broadcast station's ability to provide continued service in the event of primary equipment failure without undue risk of harmful interference. However, we caution licensees that the unapproved equipment has wider channel bandwidth, and thus, may be prone to cause interference, especially in congested spectrum-use areas. Licensees must not use the unapproved equipment on a regular or primary basis and stations using such equipment should be prepared to demonstrate that it normally uses approved equipment. A licensee is not permitted to obtain unapproved equipment from other licensees or other sources for backup use. Our action here is intended only to permit the retention and continued use, in a backup role of equipment that a licensee already possesses.

Procedural Matters

7. *Regulatory Flexibility Act.* We certify that the regulatory Flexibility Act of 1980 does not apply to this rulemaking proceeding because there will to be a significant negative economic impact on a substantial number of small business entities, as defined by Section 601(3) of the Regulatory Flexibility Act. Pub. L. No. 96–354.94 Stat.1164.5 U.S.C. Section 601 et seq (1981).

8. Therefore, it is ordered that pursuant to Sections 4(i) and 303(r) of the Communications Act of 1934, as amended, that effective April 17, 1995. Part 74 of the Commission's Rules and Regulations is amended as set forth below. It is further ordered that this proceeding is terminated.

9. Further information may be obtained from Bernard Gorden, Mass

[1] Within the allowed 720 cumulative hours of operation, there are no limits on the amount of permitted consecutive hours or number of separate uses of unapproved equipment.

Media Bureau, Engineering Policy Branch, (202) 418–2190.

List of Subjects in 40 CFR Part 74

Auxiliary facilities, Radio broadcasting.

Federal Communications Commission.

William F. Caton,

Acting Secretary.

Rule Change

Part 74 of Title 47 of the Code of Federal Regulations is amended as follows:

PART 74—EXPERIMENTAL, AUXILIARY, SPECIAL BROADCAST AND OTHER PROGRAM DISTRIBUTIONAL SERVICES

1. The authority citation for part 74 continues to read as follows:

Authority: 47 U.S.C. 154 and 303.

2. Section 74.550 is revised to read as follows:

§ 74.550 Equipment authorization.

Each authorization for aural broadcast STL, ICR, and booster stations shall require the use of notified or type accepted equipment. Equipment which has not been type approved under the equipment authorization program and which was in service prior to July 1, 1993, may be retained solely for temporary uses necessary to restore or maintain regular service provided by approved equipment, because the main or primary unit has failed or requires servicing. Such temporary uses may not interfere with or impede the establishment of other aural broadcast auxiliary links and may not occur during more than 720 cumulative hours per year. Should interference occur, the licensee must take all steps necessary to eliminate it, up to and including cessation of operation of the auxiliary transmitter. All unapproved equipment retained for temporary use must have been in the possession of the licensee prior to July 1, 1993, and may not be obtained from other sources. Requirements for obtaining a grant of equipment authorization are contained in subpart J of part 2 of the Rules. Equipment designed exclusively for fixed operation shall be authorized under notification procedures (see § 2.904(d) of this chapter).

Note: Consistent with the note to § 74.502(a), grandfathered equipment in the 942–944 MHz band and STL/ICR users of these frequencies in Puerto Rico are also required to come into compliance by July 1, 1993. The backup provisions described above apply to these stations also.

[FR Doc. 95–6489 Filed 3–15–95; 8:45 am]

BILLING CODE 6712–01–M

DEPARTMENT OF TRANSPORTATION

Office of the Secretary

49 CFR Part 1

[OST Docket No.1; Amdt. I–268]

Organization and Delegation of Powers and Duties; Delegation to All Administrators

AGENCY: Office of the Secretary, DOT.

ACTION: Final rule.

SUMMARY: This rule contains a delegation of authority to all Administrators of the Department of Transportation's (DOT) operating administrations to enter into grants, cooperative agreements, and other transactions with any person, agency, or instrumentality of the United States, any unit of state or local government, any educational institution, and any other entity in execution of the Technology Reinvestment Project authorized under the Defense Conversion, Reinvestment, and Transition Assistance Act of 1992 and related legislation. This rule is necessary to reflect the delegation in the Code of Federal Regulations.

This rule also makes a minor amendment to the regulation that details the structure and responsibilities of the Office of the Secretary by adding a new office, the Office of Aviation International Economics, within the Office of the Assistant Secretary for Aviation and International Affairs.

EFFECTIVE DATE: This rule becomes effective March 16, 1995.

FOR FURTHER INFORMATION CONTACT: Terence W. Carlson, Office of the Assistant General Counsel for Environmental, Civil Rights and General Law at (202) 366–9161, Department of Transportation, 400 7th Street, SW., Washington, DC 20590.

SUPPLEMENTARY INFORMATION: The Department of Transportation and Related Agencies Appropriations Act, 1995, Pub. L. No. 103–331, section 329A, 108 Stat. 2471, 2493 (September 30, 1994), grants the Secretary of Transportation specific authority to enter into grants, cooperative agreements, and other transactions with any person, agency, or instrumentality of the United States, any unit of state or local government, any educational institution, and any other entity in execution of the Technology Reinvestment Project (TRP) authorized under the Defense Conversion, Reinvestment, and Transition Assistance Act of 1992, Pub. L. No. 102–484, 106 Stat. 2658 (October 23, 1992), and related legislation. TRP is a statutory interagency project lead by the Department of Defense (DOD) through its Advanced Research Projects Agency, which uses DOD funds to support the cost-shared application of defense-related technologies to the commercial sector. Therefore, it is necessary to amend the relevant part of the CFR to delegate this authority to the Administrators of the DOT operating administrations.

49 CFR part 1 describes the organization of DOT and provides for the performance of duties imposed upon, and the exercise of powers vested in, the Secretary of Transportation by law. Section 1.45 delegates certain authorities of the Secretary to all Administrators of the DOT operating administrations. This rulemaking amends § 1.45(a) to add a new subparagraph (18), which delegates to the Administrators the authority to enter into grants, cooperative agreements, and other transactions with any entity in execution of the Technology Reinvestment Project authorized under the Defense Conversion, Reinvestment, and Transition Assistance Act of 1992 and related legislation. This rulemaking also amends § 1.22, which details the structure and responsibilities of the Office of the Secretary. It makes a minor revision to § 1.22(c) to add a fourth office within the Office of the Assistant Secretary for Aviation and International Affairs, the Office of Aviation International Economics.

Since this rule relates to departmental management, organization, procedure, and practice, notice and public comment are unnecessary. For the same reason, good cause exists for not publishing this rule at least 30 days before its effective date, as is ordinarily required by 5 U.S.C. 553(d). Therefore, this rule is effective on the date of its publication.

List of Subjects in 49 CFR Part 1

Authority delegations (Government agencies), Organization and functions (Government agencies).

In consideration of the foregoing, and under the authority of 49 U.S.C. 332, part 1 of title 49 Code of Federal Regulations is amended as follows:

PART I—[AMENDED]

1. The authority citation for part 1 continues to read as follows:

Authority: 49 U.S.C. 322, 28 U.S.C. 2672, 31 U.S.C. 3711(a)(2).

2. Section 1.22(c) is revised to read as follows:

§ 1.22 Structure.

* * * * *

(c) *Office of the Assistant Secretary for Aviation and International Affairs.* This Office is composed of the Offices of Aviation International Economics; International Transportation and Trade; International Aviation; and Aviation Analysis.

* * * * *

3. Section 1.45 is amended by adding paragraph (a)(18) to read as follows:

§ 1.45 Delegations to all Administrators.

* * * * *

(18) Exercise the authority vested in the Secretary by Section 329A of the Department of Transportation and Related Agencies Appropriations Act, 1995, Pub. L. No. 103–331, § 329A, 108 Stat. 2471, 2493 (September 30, 1994), to enter into grants, cooperative agreements, and other transactions with any person, agency, or instrumentality of the United States, any unit of state or local government, any educational institution, and any other entity in execution of the Technology Reinvestment Project authorized under the Defense Conversion, Reinvestment, and Transition Assistance Act of 1992, Pub. L. No. 102–484, 106 Stat. 2658 (October 23, 1992), and related legislation.

Issued at Washington, DC, this 16th day of February 1995.

Federico Peña,

Secretary of Transportation.

[FR Doc. 95–6522 Filed 3–15–95; 8:45 am]

BILLING CODE 4910–62–P

National Highway Traffic Safety Administration

49 CFR Part 564

RIN 2127–AF07

[Docket No. 85–15; Notice 15]

Replaceable Light Source Information

AGENCY: National Highway Traffic Safety Administration (NHTSA), DOT.

ACTION: Response to petitions for reconsideration; final rule.

SUMMARY: This notice responds to petitions for reconsideration of the final rule, published on January 12, 1993, that requires the manufacturers of replaceable light sources for headlamps to file dimensional and other information with NHTSA in a public docket pursuant to 49 CFR part 564, *Replaceable Light Source Information*. Part 564, which currently allows light source manufacturers to file information in the part 564 Docket, is amended to allow vehicle and headlamp manufacturers also to file information in the docket. This notice also amends part 564 to allow changes to be made in light source information previously submitted. Under the amendment, NHTSA will accept a submission for change if the submitter includes a statement that substitution of a modified bulb to replace an unmodified one will not create a noncompliance of that headlamp with Standard No. 108, and submits reasons in support of the statement. In order to evaluate the reasons, NHTSA may publish a **Federal Register** notice seeking comment. The acceptance of a modified light source will have no effect upon the permissibility to continue the manufacture and use of the original light source.

DATES: The amendments are effective April 17, 1995.

FOR FURTHER INFORMATION CONTACT: Kenneth O. Hardie, Office of Rulemaking, NHTSA (202–366–6987).

SUPPLEMENTARY INFORMATION: On January 12, 1993, NHTSA published a final rule adopting 49 CFR part 564 *Replaceable Light Source Information*, as a repository for information on new types of replaceable light sources for headlamps (58 FR 3856). Later, the part 564 Docket was designated Docket 93–11 (58 FR 15132).

Paragraph 564.5(a) provides that ''each manufacturer of a replaceable light source used as original equipment on a motor vehicle'' (other than the existing HB Types of Standard No. 108) shall furnish certain information on new light source types to Docket 93–11. In addition, the preamble made clear (at 3857) that ''[a]fter information has been accepted for filing, no changes in it will be permitted'' (paragraph 564.5(c)).

Petitions for reconsideration of part 564 were filed by the American Automobile Manufacturers Association (AAMA) and Ford Motor Company (Ford). Petitioners objected to the restrictions in paragraph 564.5 that do not allow headlamp and vehicle manufacturers to make submissions to Docket 93–11, or changes in information previously submitted.

Specifically, AAMA, supported by Ford, argued that the restriction of the ability to file information regarding new light sources to manufacturers of the sources would be inappropriate in some instances, and that users of light sources (manufacturers of headlamps and vehicles) should also have the right to submit information on new ones. NHTSA, in establishing the restriction, believed that the light source manufacturer would be the entity best able to file information on its product. However, the replaceable light sources presently permitted were added pursuant to petitions submitted by vehicle manufacturers. Types HB1 and HB5 originated in petitions submitted by Ford, Type HB2 in a petition by Volkswagen, and Types HB3 and 4 in a petition from General Motors. An amendment that would allow manufacturers of motor vehicles to submit light source information would afford greater flexibility and appear to have no negative safety consequences. For the same reasons, NHTSA believes that manufacturers of replaceable bulb headlamps used as original equipment should also be permitted the opportunity to submit information to Docket No 93–11. Accordingly, the agency grants petitions for reconsideration of this issue and is amending part 564 appropriately.

AAMA and Ford also argued for the right to petition for revision of specifications for existing light sources in Docket No. 93–11. Currently, such revision is impermissible.

A manufacturer wishing to implement lighting improvements must instead incorporate the improvements in a new light source that is not interchangeable with any existing light source. AAMA stated that reasonable flexibility could be introduced into part 564, while addressing the issue of potential effects on the performance of lights on vehicles in service, by providing for public review and comment on any proposed revisions to part 564 light sources. It suggested that NHTSA establish a procedure similar to the rulemaking process involved in making specification changes in Standard No. 108 to HB Type light sources. This would allow users such as headlamp and vehicle manufacturers an opportunity to evaluate the effects on their products of any proposed revisions to light sources. In the absence of such a process, according to AAMA, the docket could become laden with light source types that may never be manufactured because of errors in initial specifications or because the light source designs have been replaced by a photometrically equivalent but improved version of the light source, such as one with longer life. Without permission to make changes in specifications, the improved light sources would have to be non-interchangeable with any other light source type in Docket No. 93–11.

Owners of vehicles whose headlamps have the original light source would therefore not be able to avail themselves of the improvement. Ford supported AAMA on this issue.

NHTSA has carefully considered these views. The agency's intent in establishing a docket for the receipt of information was to remove specifications for replaceable light sources from the direct control of Standard No. 108, that is to say, to relieve all specifications from regulation except for the interchangeability feature. The necessity to petition for rulemaking to amend Standard No. 108 and the time that is required to implement a change through the mechanism of a comment notice and final rule is costly and time-consuming for both industry and government. AAMA's request is for a substitute comment and decision process, which, in NHTSA's view, would largely negate the regulatory simplicity it envisioned when it established part 564.

Nevertheless, the agency realizes that manufacturers should not be discouraged and foreclosed from making changes or incremental improvements or changes in previously submitted designs that may enhance the performance of the light source. Under part 564, changes are presently permissible in replaceable light sources as long as they do not affect the specifications that have been filed or that are reflected in their respective Figures in Standard No. 108. For example, longer-life versions of Type HB1 are now available without the necessity of amending the specifications for Type HB1 light sources to accomplish this. Although there were no comments on the categories of specifications proposed for part 564 submissions during the rulemaking period, NHTSA would also like to point out that the part 564 categories themselves may be changed or deleted through the rulemaking process.

However, there may be changes that industry desires which would affect the specifications on file, and which a manufacturer desires to implement without affecting interchangeability. As the petitioners correctly state, this type of submission presently cannot be accepted under paragraph 564.5(c). NHTSA has decided to grant the petitions for reconsideration of this point, and to allow such submissions. After careful consideration of the matter, the agency finds that it has only one concern directly related to safety: will the modifications requested result in a light source that will create a noncompliance with Standard No. 108 when it is substituted for the original light source used in a complying headlamp. If the answer is yes, the request for change will not be accepted until the petitioner modifies the design so that it is not interchangeable with any existing one for which information has been filed in Docket No. 93–11.

To ensure that a petitioner has considered the safety implications of its request, NHTSA will require that each request for changes be accompanied by the petitioner's statement that use of a modified light source will not create a noncompliance with Standard No. 108 when used to replace the unmodified light source that was used in a headlamp originally certified to comply with Standard No. 108, and reasons to substantiate the statement. In evaluating the conformance statement and supporting reasons, NHTSA may request further information from the manufacturer or from the public. If the information available indicates that the requested change is unlikely to create a noncompliance, the request will be granted and placed in Docket No. 93–11 where it may be employed as a light source acceptable either as original equipment or as replacement for the unmodified light source theretofore used as original equipment. Because some manufacturers may wish to continue the production and use of the unmodified light source, for cost or other reasons, NHTSA will not remove the original submission from Docket No. 93–11, and the unmodified light source may continue to be manufactured as original and replacement equipment.

Finally, heretofore paragraph 564.5(d) has committed NHTSA to making light source information in Docket No. 93–11 available for public inspection not later than the date on which a vehicle equipped with a new light source is offered for sale. NHTSA is amending this provision (now paragraph 564.5(e)) to add the alternative ''or as soon as practicable after receipt'' which could occur before the date that the vehicle is offered for sale.

Rulemaking Analyses and Notices

Executive Order 12866 and DOT Regulatory Policies and Procedures. This notice was not reviewed under Executive Order 12866. It has been determined that the rulemaking is not significant under Department of Transportation regulatory policies and procedures. Implementation of this rule will remove a burden on manufacturers who heretofore have not been permitted to file information in part 564, and it will permit requests for changes in information previously filed. The impact of this rule are so minimal that preparation of a full regulatory evaluation is not warranted.

National Environmental Policy Act. NHTSA has analyzed this rule for the purposes of the National Environmental Policy Act. It is not anticipated that the rule will have a significant effect upon the environment simply because additional persons may now make submissions to Docket No. 93–11, or that requests for changes may be made in previous submissions.

Regulatory Flexibility Act. The agency has also considered the impacts of this rule in relation to the Regulatory Flexibility Act. Based on the discussion above, I certify that this rule will not have a significant economic impact upon a substantial number of small entities. Accordingly, no regulatory flexibility analysis has been prepared. Manufacturers of motor vehicles, headlamps, and light sources, those affected by the rule, are generally not small businesses within the meaning of the Regulatory Flexibility Act. Further, small organizations and governmental jurisdictions will not be significantly affected by these minor amendments as the cost of light sources is relatively small and will not be substantially affected.

Executive Order 12612 (Federalism). This rule has also been analyzed in accordance with the principles and criteria contained in Executive Order 12612, and NHTSA has determined that this rule does not have sufficient federalism implications to warrant the preparation of a Federalism Assessment.

Paperwork Reduction Act. The reporting and recordkeeping requirement associated with this rule has been approved by the Office of Management and Budget in accordance with 44 U.S.C. chapter 35. The OMB control number is 2127–0563.

Civil Justice Reform (Executive Order 12778). This final rule does not have any retroactive effect. Under 49 U.S.C. 30103, whenever a Federal motor vehicle safety standard is in effect, a state may not adopt or maintain a safety standard applicable to the same aspect of performance which is not identical to the Federal standard. Under 49 U.S.C. 30161, a procedure is set forth for judicial review of final rules establishing, amending or revoking Federal motor vehicle safety standards. That section does not require submission of a petition for reconsideration or other administrative proceedings before parties may file suit in court.

List of Subjects in 49 CFR Part 564

Motor vehicle safety, Motor vehicles.

PART 564—REPLACEABLE LIGHT SOURCE INFORMATION

In consideration of the foregoing, 49 CFR part 564 is amended as follows:

1. The authority citation for part 564 is revised to read as follows:

Authority: 49 U.S.C. 322, 30111, 30115, 30117, 30166; delegation of authority at 49 CFR 1.50.

2. Part 564 is amended by revising paragraphs 564.1, 564.2, 564.3, and 564.5 to read as follows:

§ 564.1 Scope.

This part requires the submission of dimensional, electrical specification, and marking/designation information, as specified in Appendix A of this part, for original equipment replaceable light sources used in motor vehicle headlighting systems.

§ 564.2 Purposes.

The purposes of this part are:

(a) to make available to replacement light source manufacturers the manufacturing specifications of original equipment replaceable light sources, thereby ensuring that replacement light sources are interchangeable with original equipment light sources and provide equivalent performance; and

(b) to ensure that newly developed replaceable light sources are designated as distinct and different from, and are noninterchangeable with, previously existing light sources.

§ 564.3 Applicability.

This part applies to replaceable light sources used as original equipment in motor vehicle headlighting systems.

* * * * *

§ 564.5 Information filing; agency processing of filings.

(a) Each manufacturer of a motor vehicle, original equipment headlamp, or original equipment headlamp replaceable light source, which intends to manufacture a replaceable light source as original equipment or to incorporate a replaceable light source in its headlamps or motor vehicles, other than a replaceable light source meeting the requirements of subparagraphs (a) through (e) of paragraph S7.7 of section 571.108 of this part, shall furnish the information specified in Appendix A of this part to: Associate Administrator for Rulemaking, National Highway Traffic Safety Administration, 400 Seventh Street SW., Washington, D.C. 20590. Attn: *Replaceable Light Source Information* Docket No. 93–11 (unless the agency has already filed such information in Docket No. 93–11).

(b) The manufacturer shall submit the information specified in Appendix A of this part not later than 60 days before it intends to begin the manufacture of the replaceable light source to which the information applies, or to incorporate the light source into a headlamp or motor vehicle of its manufacture. Each submission shall consist of one original set of information and 10 legible reproduced copies, all on 8½ by 11-inch paper.

(c) The Associate Administrator promptly reviews each submission and informs the manufacturer not later than 30 days after its receipt whether the submission has been accepted. Upon acceptance, the Associate Administrator files the information in Docket No. 93–11. The Associate Administrator does not accept any submission that does not contain all the information specified in Appendix A of this part, or whose accompanying information indicates that any new light source which is the subject of a submission is interchangeable with any replaceable light source specified in paragraph S7.7 of section 571.108 of this part, or for which the agency has previously filed information in Docket No. 93–11.

(d) A manufacturer may request modification of a light source for which information has previously been filed in Docket No. 93–11, and the submission shall be processed in the manner provided by paragraph 564.5(c). A request for modification shall contain the following:

(1) All the information specified in Appendix A of this part that is relevant to the modification requested,

(2) The reason for the requested modification,

(3) A statement that use of the light source as modified will not create a noncompliance with any requirement of Motor Vehicle Safety Standard No. 108 (49 CFR 571.108) when used to replace an unmodified light source in a headlamp certified by its manufacturer as conforming to all applicable Federal motor vehicle safety standards, together with reasons in support of the statement; and

(4) Information demonstrating that the modification would not adversely affect interchangeability with the original light source.

After review of the request for modification, the Associate Administrator may seek further information either from the manufacturer or through a notice published in the **Federal Register** requesting comment on whether a modified light source incorporating the changes requested will create a noncompliance with Motor Vehicle Safety Standard No. 108 when substituted for an unmodified light source. If the Associate Administrator seeks comment public comment on a submission, (s)he shall publish a further notice stating whether (s)he has accepted or rejected the submission. If a submission is accepted, the Associate Administrator files the information in Docket No. 93–11. If a submission is rejected, a manufacturer may submit information with respect to it, as provided in paragraph 564.5(a), for consideration as a new light source after such changes as will ensure that it is not interchangeable with the light source for which modification was originally requested.

(e) Information submitted under this section is made available by NHTSA for public inspection as soon as practicable after its receipt, but not later than the date on which a vehicle equipped with a new or revised replaceable light source is offered for sale.

Issued on: March 9, 1995.

Ricardo Martinez,

Administrator.

[FR Doc. 95–6378 Filed 3–15–95; 8:45 am]

BILLING CODE 4910–59–P

---

49 CFR Part 583

[Docket No. 92–64; Notice 06]

RIN 2127–AF60

Motor Vehicle Content Labeling

AGENCY: National Highway Traffic Safety Administration (NHTSA), Department of Transportation (DOT).

ACTION: Final Rule; Partial Response to Petitions for Reconsideration.

SUMMARY: The American Automobile Labeling Act requires passenger cars and other light vehicles to be labeled with information about their domestic and foreign parts content. This document provides a partial response to several petitions for reconsideration of the agency's July 1994 final rule implementing that statute. NHTSA is extending by one year a temporary compliance alternative for how manufacturers and suppliers may make content calculations.

DATES: This regulation is effective April 17, 1995. Petitions for reconsideration must be received not later than April 17, 1995.

ADDRESSES: Petitions for reconsideration should be submitted to: Administrator, National Highway Traffic Safety Administration, 400 Seventh Street SW, Washington, DC 20590.

FOR FURTHER INFORMATION CONTACT: Mr. Orron Kee, Office of Market Incentives, National Highway Safety

Administration, Room 5313, 400 Seventh Street SW, Washington, DC 20590 (202–366–0846).

SUPPLEMENTARY INFORMATION: On July 21, 1994, NHTSA published in the **Federal Register** (59 FR 37294) a final rule implementing the American Automobile Labeling Act. That statute requires passenger cars and other light vehicles to be labeled with information about their domestic and foreign parts content.

NHTSA received petitions for reconsideration from the American Automobile Manufacturers Association, General Motors, the Association of International Automobile Manufacturers, Volkswagen, the American International Automobile Dealers Association, and the Kentucky Cabinet for Economic Development. The petitioners raised a number of issues about provisions which they regard as overly burdensome and likely to have the effect of requiring manufacturers to report inaccurate percentages of domestic content. Some of the petitioners' requests raised very complex issues concerning the latitude the agency has under the law to grant the requested relief.

NHTSA is now in the process of completing its response to the petitions. It recognizes, however, that manufacturers and suppliers have an immediate need for guidance regarding the procedures for making content determinations for the 1996 model year. Indeed, manufacturers are already in the process of collecting content data from suppliers for the 1996 model year.

NHTSA has therefore decided to extend by one year a temporary alternative approach for data collection and calculations. This approach permits manufacturers and suppliers to use procedures that are expected to yield similar results. This alternative was originally available, under the July 1994 final rule, for model year 1995 and model year 1996 carlines which were first offered for sale to ultimate purchasers before June 1, 1995. The alternative is hereby extended to all model year 1996 carlines and model year 1997 carlines which are first offered for sale to ultimate purchasers before June 1, 1996. The one-year extension of the alternative will ensure that consumers receive the best information possible about the foreign and U.S./Canada origin of vehicles they are considering purchasing during this period, while minimizing burdens on auto manufacturers. For a more complete discussion of this alternative, see 59 FR 37324–25, July 21, 1994.

This final rule is being issued in partial response to the petitions for reconsideration. The agency expects to complete its full response to the petitions shortly.

Rulemaking Analyses and Notices

A. Executive Order 12866 and DOT Regulatory Policies and Procedures

NHTSA has considered the impacts of this rulemaking action under Executive Order 12866 and the Department of Transportation's regulatory policies and procedures. This rulemaking document was not reviewed under Executive Order 12866. The July 1994 final rule was determined to be ''significant'' under the Department's regulatory policies and procedures, given the degree of public interest and the relationship to other Federal programs and agencies, particularly those related to international trade. However, this final rule is not considered significant since it merely extends a temporary compliance option permitted under that final rule.

NHTSA discussed the costs associated with the July 1994 rule in a Final Regulatory Evaluation which was placed in the docket for that rulemaking. Today's amendments reduce manufacturer and supplier costs during the time of the extension by simplifying the process for making content determinations.

B. Regulatory Flexibility Act

Pursuant to the Regulatory Flexibility Act, the agency has considered the impact this rulemaking will have on small entities. I certify that this action will not have a significant economic impact on a substantial number of small entities. Therefore, a regulatory flexibility analysis is not required for this action. Although certain small businesses, such as parts suppliers and some vehicle manufacturers, are affected by the regulation, the effect on them is minor. More specifically, the amendment provides small cost savings during the time of the extension by simplifying the process for making content determinations.

C. National Environmental Policy Act

The agency has analyzed the environmental impacts of the regulation in accordance with the National Environmental Policy Act, 42 U.S.C. 4321 *et seq.*, and has concluded that it will not have a significant effect on the quality of the human environment.

D. Executive Order 12612 (Federalism)

This action has been analyzed in accordance with the principles and criteria contained in Executive Order 12612, and it has been determined that the rule does not have sufficient Federalism implications to warrant the preparation of a Federalism Assessment.

E. Paperwork Reduction Act

There are no reporting and recordkeeping requirements associated with this final rule.

F. Executive Order 12778 (Civil Justice Reform)

This rule does not have any retroactive effect. States are preempted from promulgating laws and regulations contrary to the provisions of the rule. The rule does not require submission of a petition for reconsideration or other administrative proceedings before parties may file suit in court.

List of Subjects in 49 CFR Part 583

Motor vehicles, Imports, Labeling, Reporting and recordkeeping requirements.

In consideration of the foregoing, 49 CFR part 583 is amended as follows:

PART 583—AUTOMOBILE PARTS CONTENT LABELING

1. The authority citation for part 583 continues to read as follows:

Authority: 49 U.S.C. 32304, 49 CFR 1.50, 501.2(f).

2. Section 583.5 is amended by revising paragraph (i) to read as follows:

§ 583.5 Label requirements.

* * * * *

(i) Manufacturers need not provide any of the information provided in this part for model year 1994 vehicles. For model year 1995 and model year 1996 carlines, and for model year 1997 carlines which are first offered for sale to ultimate purchasers before June 1, 1996, manufacturers and suppliers may, instead of following the calculation procedures set forth in this part, use procedures that they expect, in good faith, to yield similar results.

Issued on March 13, 1995.

Ricardo Martinez,

Administrator.

[FR Doc. 95–6518 Filed 3–15–95; 8:45 am]

BILLING CODE 4910–59–P

DEPARTMENT OF COMMERCE

National Oceanic and Atmospheric Administration

50 CFR Part 625

[Docket No. 950306067–5067–01; I.D. 021795D]

RIN 0648–AH96

Summer Flounder Fishery; Court-Ordered Regulation Change

AGENCY: National Marine Fisheries Service (NMFS), National Oceanic and Atmospheric Administration (NOAA), Commerce.

ACTION: Final rule.

SUMMARY: NMFS announces a change in the regulations implementing the Fishery Management Plan for the Summer Flounder Fishery (FMP). This action is taken to comply with a Consent Order issued by the U.S. District Court for the Eastern District of Virginia directing NMFS to revise specified regulatory language.

EFFECTIVE DATE: March 15, 1995.

FOR FURTHER INFORMATION CONTACT: Hannah Goodale, 508–281–9101.

SUPPLEMENTARY INFORMATION: Regulations implementing the Summer Flounder Fishery Management Plan are found at 50 CFR part 625. In a Consent Order dated December 19, 1994, the United States District Court for the Eastern District of Virginia, ordered NMFS to delete the lanaguage in § 625.4(a)(3) that requires Federal permit holders, when faced with differing state and Federal regulations, to abide by the most restrictive requirement. The new language allows only state requirements that are consistent with Federal management measures to remain in effect.

Classification

This final rule has been determined to be not significant for the purpose of E.O. 12866.

This final rule is exempt from the procedures of the Regulatory Flexibility Act because it is not required to be issued with prior notice and opportunity for public comment.

Because the language of this rule is required by a judicial order, providing prior notice and opportunity for public comment would serve no useful purpose and is therefore unnecessary. Accordingly the Assistant Administrator for Fisheries, NOAA finds good cause under 5 U.S.C. 553(b)(B) to waive the requirement to provide prior notice and opportunity for public comment. Likewise, providing a 30-day delay in effective date would be inconsistent with the intent of the judicial order and could act to delay relieving restrictions on the fishery.

List of Subjects in 50 CFR part 625

Fisheries, Reporting and recordkeeping requirements.

Dated: March 10, 1995.

Gary Matlock,

Program Management Officer, National Marine Fisheries Service.

For the reasons set out in the preamble, 50 CFR part 625 is amended as follows:

PART 625—SUMMER FLOUNDER FISHERY

1. The authority citation for part 625 continues to read as follows:

Authority: 16 U.S.C. 1801 *et seq.*

2. Section 625.4 is amended by revising paragraph (a)(3) to read as follows:

§ 625.4 Vessel permits.

(a) * * *

(3) *Condition*. Vessel owners who apply for a fishing vessel permit under this section must agree as a condition of the permit that the vessel's fishing, catch and pertinent gear (without regard to whether such fishing occurs in the EEZ or landward of the EEZ, and without regard to where such fish or gear are possessed, taken or landed) will be subject to all requirements of this part. State requirements consistent with Federal management measures shall remain in effect. Owners and operators of vessels fishing under the terms of a moratorium permit issued pursuant to paragraph (b) of this section must also agree, as a condition of the permit, not to land summer flounder in any state that the Regional Director has determined no longer has commercial quota available.

* * * * *

[FR Doc. 95–6450 Filed 3–15–95; 8:45 am]

BILLING CODE 3510–22–F

Proposed Rules

Federal Register
Vol. 60, No. 51
Thursday, March 16, 1995

This section of the FEDERAL REGISTER contains notices to the public of the proposed issuance of rules and regulations. The purpose of these notices is to give interested persons an opportunity to participate in the rule making prior to the adoption of the final rules.

DEPARTMENT OF TRANSPORTATION

Federal Aviation Administration

14 CFR Part 39

[Docket No. 94–NM–211–AD]

Airworthiness Directives; Learjet Model 24, 25, 31, 35, 36, and 55 Series Airplanes, and Learjet Model 28 and 29 Airplanes

AGENCY: Federal Aviation Administration, DOT.

ACTION: Notice of proposed rulemaking (NPRM).

SUMMARY: This document proposes the supersedure of an existing airworthiness directive (AD), applicable to certain Learjet Model 24, 25, 31, 35, 36, and 55 series airplanes, and Learjet Model 28 and 29 airplanes, that currently requires a revision to the Limitations Section of the FAA-approved Airplane Flight Manual (AFM) to prohibit flight above an altitude of 41,000 feet. The actions specified by that AD are intended to prevent cracking and subsequent failure of the outflow/safety valves, which could result in rapid decompression of the airplane. This action would require replacement of certain outflow/safety valves, which, when accomplished, constitutes terminating action for the previously required AFM limitation.

DATES: Comments must be received by May 8, 1995.

ADDRESSES: Submit comments in triplicate to the Federal Aviation Administration (FAA), Transport Airplane Directorate, ANM–103, Attention: Rules Docket No. 94–NM–211–AD, 1601 Lind Avenue, SW., Renton, Washington 98055–4056. Comments may be inspected at this location between 9 a.m. and 3 p.m., Monday through Friday, except Federal holidays.

The service information referenced in the proposed rule may be obtained from Allied Signal, Inc., Controls & Accessories, 11100 N. Oracle Road, Tucson, Arizona 85737–9588; telephone (602) 469–1000. This information may be examined at the FAA, Transport Airplane Directorate, 1601 Lind Avenue, SW., Renton, Washington; or at the FAA, Transport Airplane Directorate, Los Angeles Aircraft Certification Office, 3960 Paramount Boulevard, Lakewood, California.

FOR FURTHER INFORMATION CONTACT: Walter Eierman, Aerospace Engineer, Systems and Equipment Branch, ANM–130L, FAA, Transport Airplane Directorate, Los Angeles Aircraft Certification Office, 3960 Paramount Boulevard, Lakewood, California 90712; telephone (310) 627–5336; fax (310) 627–5210.

SUPPLEMENTARY INFORMATION:

Comments Invited

Interested persons are invited to participate in the making of the proposed rule by submitting such written data, views, or arguments as they may desire. Communications shall identify the Rules Docket number and be submitted in triplicate to the address specified above. All communications received on or before the closing date for comments, specified above, will be considered before taking action on the proposed rule. The proposals contained in this notice may be changed in light of the comments received.

Comments are specifically invited on the overall regulatory, economic, environmental, and energy aspects of the proposed rule. All comments submitted will be available, both before and after the closing date for comments, in the Rules Docket for examination by interested persons. A report summarizing each FAA-public contact concerned with the substance of this proposal will be filed in the Rules Docket.

Commenters wishing the FAA to acknowledge receipt of their comments submitted in response to this notice must submit a self-addressed, stamped postcard on which the following statement is made: ''Comments to Docket Number 94–NM–211–AD.'' The postcard will be date stamped and returned to the commenter.

Availability of NPRMs

Any person may obtain a copy of this NPRM by submitting a request to the FAA, Transport Airplane Directorate, ANM–103, Attention: Rules Docket No. 94–NM–211–AD, 1601 Lind Avenue, SW., Renton, Washington 98055–4056.

Discussion

On December 9, 1994, the FAA issued AD 94–26–01, amendment 39–9097 (59 FR 64844, December 16, 1994), applicable to certain Learjet Model 24, 25, 31, 35, 36, and 55 series airplanes, and Learjet Model 28 and 29 airplanes, to require a revision to the Limitations Section of the FAA-approved Airplane Flight Manual (AFM) to prohibit flight above an altitude of 41,000 feet. That action was prompted originally by a report of failure of a safety valve in the pressurization system on a Learjet Model 31A airplane. Failure of the valve resulted in depressurization of the cabin. Investigation revealed that the poppets of certain outflow/safety valves were cracked. These discrepant valves, including the safety valve installed on the incident airplane, had been manufactured since January 1, 1989. Certain valves manufactured since that date have been found to be susceptible to cracking due to an improper molding process. Cracking in the poppets of the outflow/safety valves in the pressurization system can result in an open valve with an effective flow area of 4.4 square inches; additionally, the valve may close and remain closed. The requirements of that AD are intended to prevent such cracking and subsequent failure of the valves, which could result in rapid decompression of the airplane.

When AD 94–26–01 was issued, it contained a provision for optional replacement of certain outflow/safety valves. Accomplishment of the replacement constitutes terminating action for the AFM revision; after the replacement has been accomplished, the previously required AFM limitation may be removed. In the preamble to AD 94–26–01, the FAA indicated that it intended to revise that AD to require the replacement of those outflow/safety valves. This action proposes such a requirement.

The FAA previously reviewed and approved Allied Signal Aerospace Alert Service Bulletins 130406–21–A4011, Revision 2, dated September 28, 1994 (for part number 130406–1); and 102850–21–A4021, Revision 2, dated October 6, 1994 (for part number 102850–5). These alert service bulletins describe procedures for replacement of certain outflow/safety valves in the

pressurization system with serviceable valves. Further, the alert service bulletins recommend that the maximum altitude for operation of airplanes that may be equipped with these outflow/safety valves be limited to 41,000 feet as an interim measure until the affected valves are replaced.

Since the issuance of AD 94–26–01, Allied Signal Aerospace has issued Revision 3 of one of the alert service bulletins described above, Alert Service Bulletin 130406–21–A4011, dated January 5, 1995 (for part number 130406–1). The FAA has reviewed and approved the revised alert service bulletin, which adds certain valve serial numbers to the effectivity list of the alert service bulletin. The FAA has determined that these additional valve serial numbers also are subject to the unsafe condition specified in this AD, and has referenced Revision 3 of the alert service bulletin as the appropriate source of service information for replacement of outflow/safety valves having part number 130406–1.

The FAA also has reviewed and approved the following Learjet service bulletins, which reference the Allied Signal Aerospace alert service bulletins described previously as the appropriate sources of service information:

1. SB 24/25–21–4, dated January 3, 1995 (for Model 24 and 25 series airplanes);
2. SB 28/29–21–8, dated January 3, 1995 (for Model 28 and 29 airplanes);
3. SB 31–21–6, dated January 3, 1995 (for Model 31 series airplanes);
4. SB 35/36–21–19, dated January 3, 1995 (for Model 35 and 36 series airplanes); and
5. SB 55–21–10, dated January 3, 1995 (for Model 55 series airplanes).

Since an unsafe condition has been identified that is likely to exist or develop on other products of this same type design, the proposed AD would supersede AD 94–26–01 to continue to require a revision to the Limitations Section of the FAA-approved Airplane Flight Manual (AFM) to prohibit flight above an altitude of 41,000 feet. This AD also would require replacement of certain outflow/safety valves. Accomplishment of the replacement constitutes terminating action for the AFM revision; after the replacement has been accomplished, the previously required AFM limitation may be removed. The replacement would be required to be accomplished in accordance with the applicable alert service bulletin described previously.

As a result of recent communications with the Air Transport Association (ATA) of America, the FAA has learned that, in general, some operators may misunderstand the legal effect of AD's on airplanes that are identified in the applicability provision of the AD, but that have been altered or repaired in the area addressed by the AD. The FAA points out that all airplanes identified in the applicability provision of an AD are legally subject to the AD. If an airplane has been altered or repaired in the affected area in such a way as to affect compliance with the AD, the owner or operator is required to obtain FAA approval for an alternative method of compliance with the AD, in accordance with the paragraph of each AD that provides for such approvals. A note has been included in this notice to clarify this long-standing requirement.

There are approximately 350 Model 24, 25, 31, 35, 36, and 55 series airplanes and Model 28 and 29 airplanes of the affected design in the worldwide fleet. The FAA estimates that 280 airplanes of U.S. registry would be affected by this proposed AD.

The AFM revision required currently by AD 94–26–01 takes approximately 1 work hour per airplane to accomplish, at an average labor rate of $60 per work hour. Based on these figures, the total cost impact associated with the current AFM revision requirement of AD 94–26–01 on U.S. operators is estimated to be $16,800, or $60 per airplane.

Removal and replacement of parts that would be required by this proposed AD would require approximately 12 work hours to accomplish, at an average labor rate of $60 per work hour. However, Allied Signal advises that it will reimburse operators for the costs of such removal and replacement. Therefore, based on this information, U.S. operators would incur no cost impact for the proposed removal and replacement requirements.

Based on the figures discussed above, the (combined) total cost impact of this AD on U.S. operators would be approximately $16,800, or $60 per airplane.

The total cost impact figure discussed above is based on assumptions that no operator has yet accomplished any of the proposed requirements of this AD action, and that no operator would accomplish those actions in the future if this AD were not adopted.

The regulations proposed herein would not have substantial direct effects on the States, on the relationship between the national government and the States, or on the distribution of power and responsibilities among the various levels of government. Therefore, in accordance with Executive Order 12612, it is determined that this proposal would not have sufficient federalism implications to warrant the preparation of a Federalism Assessment.

For the reasons discussed above, I certify that this proposed regulation (1) is not a ''significant regulatory action'' under Executive Order 12866; (2) is not a ''significant rule'' under the DOT Regulatory Policies and Procedures (44 FR 11034, February 26, 1979); and (3) if promulgated, will not have a significant economic impact, positive or negative, on a substantial number of small entities under the criteria of the Regulatory Flexibility Act. A copy of the draft regulatory evaluation prepared for this action is contained in the Rules Docket. A copy of it may be obtained by contacting the Rules Docket at the location provided under the caption **ADDRESSES**.

List of Subjects in 14 CFR Part 39

Air transportation, Aircraft, Aviation safety, Safety.

The Proposed Amendment

Accordingly, pursuant to the authority delegated to me by the Administrator, the Federal Aviation Administration proposes to amend part 39 of the Federal Aviation Regulations (14 CFR part 39) as follows:

PART 39—AIRWORTHINESS DIRECTIVES

1. The authority citation for part 39 continues to read as follows:

Authority: 49 U.S.C. App. 1354(a), 1421 and 1423; 49 U.S.C. 106(g); and 14 CFR 11.89.

§ 39.13 [Amended]

2. Section 39.13 is amended by removing amendment 39–9097 (59 FR 64844, December 16, 1994), and by adding a new airworthiness directive (AD), to read as follows:

Learjet: Docket 94–NM–211–AD. Supersedes AD 94–26–01, Amendment 39–9097.

Applicability: Model 24, 25, 31, 35, 36, and 55 series airplanes, and Model 28 and 29 airplanes; equipped with Allied Signal outflow/safety valves, number 130406–1 or 102850–5; as identified in Allied Signal Aerospace Alert Service Bulletin 130406–21–A4011, Revision 3, dated January 5, 1995; or 102850–21–A4021, Revision 2, dated October 6, 1994; certificated in any category.

Note 1: This AD applies to each airplane identified in the preceding applicability provision, regardless of whether it has been modified, altered, or repaired in the area subject to the requirements of this AD. For airplanes that have been modified, altered, or repaired so that the performance of the requirements of this AD is affected, the owner/operator must use the authority provided in paragraph (d) to request approval from the FAA. This approval may address either no action, if the current configuration

eliminates the unsafe condition; or different actions necessary to address the unsafe condition described in this AD. Such a request should include an assessment of the effect of the changed configuration on the unsafe condition addressed by this AD. In no case does the presence of any modification, alteration, or repair remove any airplane from the applicability of this AD.

Compliance: Required as indicated, unless accomplished previously.

To prevent rapid decompression of the airplane due to cracking and subsequent failure of certain outflow/safety valves, accomplish the following:

(a) Within 30 days after January 3, 1995 (the effective date of AD 94–26–01, amendment 39–9097), revise the Limitations Section of the FAA-approved Airplane Flight Manual (AFM) to include the following. This may be accomplished by inserting a copy of this AD in the AFM.

''Operation of the airplane at any altitude above 41,000 feet is prohibited.''

(b) Within 18 months after the effective date of this AD, replace the outflow/safety valves, part numbers 130406–1 and 102850–5, as identified in Allied Signal Aerospace Alert Service Bulletin 130406–21–A4011, Revision 3, dated January 5, 1995, or 102850–21–A4021, Revision 2, dated October 6, 1994, as applicable; with serviceable parts in accordance with the procedures described in the applicable alert service bulletin. Accomplishment of this replacement constitutes terminating action for the requirement of paragraph (a) of this AD; after the replacement has been accomplished, the previously required AFM limitation may be removed.

(c) As of January 3, 1995 (the effective date of AD 94–26–01, amendment 39–9097), no person shall install an outflow/safety valve, part number 130406–1 or 102850–5, as identified in Allied Signal Aerospace Alert Service Bulletin 130406–21–A4011, Revision 3, dated January 5, 1995, or 102850–21–A4021, Revision 2, dated October 6, 1994, as applicable; on any airplane unless that valve is considered to be serviceable in accordance with the specifications contained in the Accomplishment Instructions of the applicable alert service bulletin.

(d) An alternative method of compliance or adjustment of the compliance time that provides an acceptable level of safety may be used if approved by the Manager, Los Angeles Aircraft Certification Office (ACO), FAA, Transport Airplane Directorate. Operators shall submit their requests through an appropriate FAA Principal Maintenance Inspector, who may add comments and then send it to the Manager, Los Angeles ACO.

Note 2: Information concerning the existence of approved alternative methods of compliance with this AD, if any, may be obtained from the Los Angeles ACO.

(e) Special flight permits may be issued in accordance with sections 21.197 and 21.199 of the Federal Aviation Regulations (14 CFR 21.197 and 21.199) to operate the airplane to a location where the requirements of this AD can be accomplished.

Issued in Renton, Washington, on March 9, 1995.

Neil D. Schalekamp,

Acting Manager, Transport Airplane Directorate, Aircraft Certification Service.

[FR Doc. 95–6322 Filed 3–15–95; 8:45 am]

BILLING CODE 4910–13–U

---

14 CFR Part 39

[Docket No. 95–NM–15–AD]

Airworthiness Directives; Boeing Model B–17E, F, and G Airplanes

AGENCY: Federal Aviation Administration, DOT.

ACTION: Notice of proposed rulemaking (NPRM).

SUMMARY: This document proposes the adoption of a new airworthiness directive (AD) that is applicable to all Boeing Model B–17E, F, and G airplanes. This proposal would require inspections to detect cracking and corrosion of the wing spar chords, bolts and bolt holes of the spar chords, and wing terminals; and correction of any discrepancy found during these inspections. This proposal is prompted by reports of cracking and corrosion of the wing spar. The actions specified by the proposed AD are intended to prevent reduced structural integrity of the wing of the airplane due to the problems associated with corrosion and cracking of the wing spar.

DATES: Comments must be received by April 18, 1995.

ADDRESSES: Submit comments in triplicate to the Federal Aviation Administration (FAA), Transport Airplane Directorate, ANM–103, Attention: Rules Docket No. 95–NM–15–AD, 1601 Lind Avenue, SW., Renton, Washington 98055–4056. Comments may be inspected at this location between 9:00 a.m. and 3:00 p.m., Monday through Friday, except Federal holidays.

FOR FURTHER INFORMATION CONTACT: Philip Forde, Aerospace Engineer, Airframe Branch, ANM–120S, FAA, Transport Airplane Directorate, Seattle Aircraft Certification Office, 1601 Lind Avenue, SW., Renton, Washington 98055–4056; telephone (206) 227–2771; fax (206) 227–1181.

SUPPLEMENTARY INFORMATION:

Comments Invited

Interested persons are invited to participate in the making of the proposed rule by submitting such written data, views, or arguments as they may desire. Communications shall identify the Rules Docket number and be submitted in triplicate to the address specified above. All communications received on or before the closing date for comments, specified above, will be considered before taking action on the proposed rule. The proposals contained in this notice may be changed in light of the comments received.

Comments are specifically invited on the overall regulatory, economic, environmental, and energy aspects of the proposed rule. All comments submitted will be available, both before and after the closing date for comments, in the Rules Docket for examination by interested persons. A report summarizing each FAA-public contact concerned with the substance of this proposal will be filed in the Rules Docket.

Commenters wishing the FAA to acknowledge receipt of their comments submitted in response to this notice must submit a self-addressed, stamped postcard on which the following statement is made: ''Comments to Docket Number 95–NM–15–AD.'' The postcard will be date stamped and returned to the commenter.

Availability of NPRMs

Any person may obtain a copy of this NPRM by submitting a request to the FAA, Transport Airplane Directorate, ANM–103, Attention: Rules Docket No. 95–NM–15–AD, 1601 Lind Avenue, SW., Renton, Washington 98055–4056.

Discussion

Recently, during routine inspections of several Boeing Model B–17 series airplanes, extensive corrosion and numerous cracks were found on the tubular spar chords of the inner wing. These tubular spar chords mate with the circular inner wing attach fitting inserts that are held together by close tolerance bolts. (There are four such joints on each wing of the airplane.) Investigation revealed that moisture trapped in the inner wing spars caused some of the bolts in the joint assemblies to seize and corrode. The FAA has determined that the wing spar assembly is susceptible to moisture accumulation, which may result in internal corrosion and subsequent cracking in this area. Since this area is subject to maximum bending and stress loads, cracking in this area is particularly critical.

This condition, if not corrected and detected in a timely manner, could result in reduced structural integrity of the wing of the airplane.

Since an unsafe condition has been identified that is likely to exist or develop on other products of this same type design, the proposed AD would require a dye penetrant inspection to

detect cracking and corrosion of the aluminum wing spar chords; an eddy current inspection to detect cracking and corrosion of the bolts and bolt holes of the spar chords; and correction of any discrepancies found. The FAA has determined that the spar-to-wing terminal joint must be separated, including removing the wing of the airplane from the fuselage, to adequately detect cracking and corrosion of the bolts, inner wing fittings, and tubular spar chords. This action would also require visual and eddy current inspections to detect cracking and corrosion of the wing terminals and spar chords; and repair of any cracking or corrosion found.

There are approximately 12 airplanes of the affected design in the worldwide fleet. The FAA estimates that 10 airplanes of U.S. registry would be affected by this proposed AD, that it would take approximately 1,500 work hours per airplane to accomplish the proposed actions, and that the average labor rate is $60 per work hour. Based on these figures, the total cost impact of the proposed AD on U.S. operators is estimated to be $900,000, or $90,000 per airplane.

The total cost impact figure discussed above is based on assumptions that no operator has yet accomplished any of the proposed requirements of this AD action, and that no operator would accomplish those actions in the future if this AD were not adopted.

The regulations proposed herein would not have substantial direct effects on the States, on the relationship between the national government and the States, or on the distribution of power and responsibilities among the various levels of government. Therefore, in accordance with Executive Order 12612, it is determined that this proposal would not have sufficient federalism implications to warrant the preparation of a Federalism Assessment.

For the reasons discussed above, I certify that this proposed regulation (1) is not a ''significant regulatory action'' under Executive Order 12866; (2) is not a ''significant rule'' under the DOT Regulatory Policies and Procedures (44 FR 11034, February 26, 1979); and (3) if promulgated, will not have a significant economic impact, positive or negative, on a substantial number of small entities under the criteria of the Regulatory Flexibility Act. A copy of the draft regulatory evaluation prepared for this action is contained in the Rules Docket. A copy of it may be obtained by contacting the Rules Docket at the location provided under the caption **ADDRESSES.**

List of Subjects in 14 CFR Part 39

Air transportation, Aircraft, Aviation safety, Safety.

The Proposed Amendment

Accordingly, pursuant to the authority delegated to me by the Administrator, the Federal Aviation Administration proposes to amend part 39 of the Federal Aviation Regulations (14 CFR part 39) as follows:

PART 39—AIRWORTHINESS DIRECTIVES

1. The authority citation for part 39 continues to read as follows:

Authority: 49 U.S.C. App. 1354(a), 1421 and 1423; 49 U.S.C. 106(g); and 14 CFR 11.89.

39.13 [Amended]

2. Section 39.13 is amended by adding the following new airworthiness directive:

Boeing: Docket 95–NM–15–AD.

Applicability: All Model B–17E, F, and G airplanes, certificated in any category.

Note 1: For airplanes on which the terminal fitting-to-spar chord joint was separated prior to the effective date of this AD, and inspection(s) of and/or repair(s) to the wing terminals-to-spar chords were accomplished prior to the effective date of this AD: Applications for an alternative method of compliance to the requirements of paragraphs (a) and (b) of this AD should be submitted to the FAA, in accordance with the provisions of paragraph (d) of this AD.

Compliance: Required as indicated, unless accomplished previously.

To prevent reduced structural integrity of the wing of the airplane, accomplish the following:

(a) Within 90 days after the effective date of this AD, accomplish the requirements of paragraphs (a)(1), (a)(2), and (a)(3) of this AD.

(1) Perform a dye penetrant inspection to detect cracking of each inboard end of the eight aluminum wing spar chords, in accordance with MIL–STD–6866. If any cracking is detected that is beyond the limits specified in the acceptance/rejection criteria contained in sensitivity level Group IV, MIL–I–25135, prior to further flight, repair in accordance with a method approved by the Manager, Seattle Aircraft Certification Office (ACO), FAA, Transport Airplane Directorate.

Note 2: The part number (P/N) for the upper wing spar chords is 3–14231–0, and the P/N for the lower wing spar chords is 3–14231–1.

(2) Perform a high frequency eddy current inspection to detect cracking of the bolt holes of the spar chords, in accordance with a method approved by the Manager, Seattle Aircraft Certification Office (ACO), FAA, Transport Airplane Directorate. The inboard-most bolt on each of the eight wing terminal fitting-to-wing spar chord tube joints must be removed to perform this inspection.

Note 3: The following are the P/N's for the terminal fitting-to-spar chord joint assemblies:

Assemblies	Assembly part No.
Left Upper Front Spar Joint Assembly	75–4781–0
Right Upper Front Spar Joint Assembly	75–4781–1
Left Lower Front Spar Joint Assembly	65–4782–512
Right Lower Front Spar Joint Assembly	65–4782–513
Left Upper Rear Spar Joint Assembly	75–4783–0
Right Upper Rear Spar Joint Assembly	75–4783–1
Left Lower Rear Spar Joint Assembly	75–4784–0
Right Lower Rear Spar Joint Assembly	75–4784–1

Note 4: The following are the P/N's for the bolts for the spar chords:

Bolts for	Bolt part No.
Upper and Lower Front Spar Chords.	NAS56A36
Upper Rear Spar Chord	NAS56A34
Lower Rear Spar Chord	NAS56A40–5

(3) Perform a visual inspection to detect corrosion of the bolts and replace any corroded bolt with a new bolt having a P/N in the NAS 6606 series in accordance with Army Technical Order Number 01–20EF–2. Prior to further flight, accomplish the requirements of paragraphs (a)(3)(i), (a)(3)(ii), and (a)(3)(iii) of this AD in accordance with Army Technical Order Number 01–20EF–2.

Note 4: The following are the P/N's for the replacement bolts for the spar chords:

Replacement bolts for	Replacement bolt part No.
Upper and Lower Front Spar	NAS 6606–51
Upper Rear Spar	NAS 6606–47
Lower Rear Spar	NAS 6606–56

(i) Install a washer having P/N MS 20002C6 under the head of the bolt, a self-locking nut having P/N NAS 1804–6, and a washer having P/N MS 200026 under the nut, for each replacement bolt.

(ii) Torque any replacement bolt to 95–105 inch-pounds.

(iii) Oversize replacement bolts by 1/16 inch, as necessary.

(b) Within 18 months after the effective date of this AD, accomplish the requirements of either paragraph (b)(1) or (b)(2) of this AD.

(1) Perform visual and high frequency eddy current inspections, that include separating all eight wing terminal-to-spar chord joints, to detect cracking and corrosion of the wing terminals and spar chords, in accordance with a method approved by the Manager, Seattle ACO. Or

(2) Perform an equivalent inspection(s) to that required by paragraph (b)(1) of this AD,

that may not include separating the terminal fitting from the spar chord to detect cracking and corrosion of all eight wing terminal-to-spar chord joints, in accordance with a method approved by the Manager, Seattle ACO. To be considered acceptable, the equivalent inspection(s) must include, at a minimum, the criteria specified in paragraphs (b)(2)(i), (b)(2)(ii), and (b)(2)(iii) of this AD.

(i) The inspection must include removal of all 64 bolts that join the eight wing terminals to the eight spar chords; and

(ii) The inspection must adequately detect cracking of the spar chord, and corrosion between the terminal fitting and the spar chord; and

(iii) The inspection must include a visual inspection to detect corrosion of the attachment bolts; and a high frequency eddy current, and boroscope inspection at 10 power magnification, of the bolt holes common to the spar chord-to-wing terminal interface.

(c) If any cracking and/or corrosion is detected during any of the inspections required by paragraphs (a) and (b) of this AD, prior to further flight, repair in accordance with a method approved by the Manager, Seattle ACO.

(d) An alternative method of compliance or adjustment of the compliance time that provides an acceptable level of safety may be used if approved by the Manager, Seattle ACO. Operators shall submit their requests through an appropriate FAA Principal Maintenance Inspector, who may add comments and then send it to the Manager, Seattle ACO.

Note 5: Information concerning the existence of approved alternative methods of compliance with this AD, if any, may be obtained from the Seattle ACO.

(e) Special flight permits may be issued in accordance with sections 21.197 and 21.199 of the Federal Aviation Regulations (14 CFR 21.197 and 21.199) to operate the airplane to a location where the requirements of this AD can be accomplished.

Issued in Renton, Washington, on March 9, 1995.

Neil D. Schalekamp,

Acting Manager, Transport Airplane Directorate, Aircraft Certification Service.

[FR Doc. 95–6321 Filed 3–15–95; 8:45 am]

BILLING CODE 4910–13–U

---

14 CFR Part 39

[Docket No. 95–CE–13–AD]

Airworthiness Directives; Fairchild Aircraft SA226 and SA227 Series Airplanes

AGENCY: Federal Aviation Administration, DOT.

ACTION: Notice of proposed rulemaking (NPRM).

SUMMARY: This document proposes to adopt a new airworthiness directive (AD) that would apply to certain Fairchild Aircraft SA226 and SA227 series airplanes that utilize a direct current (DC) generator. The proposed action would require relocating the left-hand (LH) and right-hand (RH) essential bus current limiters (225 amp) to the battery bus (main bus tie). A safety recommendation received by the Federal Aviation Administration (FAA) that details potential electrical failure problems on Fairchild SA226 and SA227 series airplanes prompted the proposed action. The actions specified by the proposed AD are intended to prevent failure of the LH or RH essential bus when engine failure results in a blown generator current limiter, which could result in loss of airplane electrical power.

DATES: Comments must be received on or before June 2, 1995.

ADDRESSES: Submit comments in triplicate to the FAA, Central Region, Office of the Assistant Chief Counsel, Attention: Rules Docket No. 95–CE–13–AD, Room 1558, 601 E. 12th Street, Kansas City, Missouri 64106. Comments may be inspected at this location between 8 a.m. and 4 p.m., Monday through Friday, holidays excepted.

Service information that applies to the proposed AD may be obtained from Fairchild Aircraft, P.O. Box 790490, San Antonio, Texas 78279–0490; telephone (210) 824–9421. This information also may be examined at the Rules Docket at the address above.

FOR FURTHER INFORMATION CONTACT: Mr. George R. Hash, Aerospace Engineer, FAA, Airplane Certification Office, 2601 Meacham Boulevard, Fort Worth, Texas 76193–0150; telephone (817) 222–5134; facsimile (817) 222–5959.

SUPPLEMENTARY INFORMATION:

Comments Invited

Interested persons are invited to participate in the making of the proposed rule by submitting such written data, views, or arguments as they may desire. Communications should identify the Rules Docket number and be submitted in triplicate to the address specified above. All communications received on or before the closing date for comments, specified above, will be considered before taking action on the proposed rule. The proposals contained in this notice may be changed in light of the comments received.

Comments are specifically invited on the overall regulatory, economic, environmental, and energy aspects of the proposed rule. All comments submitted will be available, both before and after the closing date for comments, in the Rules Docket for examination by interested persons. A report that summarizes each FAA-public contact concerned with the substance of this proposal will be filed in the Rules Docket.

Commenters wishing the FAA to acknowledge receipt of their comments submitted in response to this notice must submit a self-addressed, stamped postcard on which the following statement is made: ''Comments to Docket No. 95–CE–13–AD.'' The postcard will be date stamped and returned to the commenter.

Availability of NPRMs

Any person may obtain a copy of this NPRM by submitting a request to the FAA, Central Region, Office of the Assistant Chief Counsel, Attention: Rules Docket No. 95–CE–13–AD, Room 1558, 601 E. 12th Street, Kansas City, Missouri 64106.

Discussion

The FAA has received a safety recommendation that details potential electrical failure problems on Fairchild SA226 and SA227 series airplanes. Flight simulation revealed that electrical power loss could occur on the affected airplanes because of failure of the LH essential bus. Switching delays between the left and right side electrical systems result in left generator motor action, which could then cause the left side current limiter to open. This would result in failure of the left essential bus, which will result in loss of alternating current (AC) power to the primary attitude indicator and the lighting for the standby attitude indicator.

Failure of either engine will result in the loss of the essential bus for that side if the motoring action of the generator causes the current limiter to open. This condition, if not detected and corrected, could result in loss of airplane electrical power including loss of attitude and landing gear power.

Fairchild has issued Service Bulletin (SB) 226–24–034, SB 227–24–015, and SB CC7–24–002, all Issued: September 29, 1994. These service bulletins reference a modification that relocates the RH and LH essential bus current limiters (225 amp) to the battery bus (main bus tie). Fairchild Aircraft Engineering Kit Drawing 27K82376, ''Current Limiter Rebussing Kit,'' contains the specific procedures for incorporating this modification on the affected airplanes.

After examining the circumstances and reviewing all available information related to the incidents described above, the FAA has determined that AD action should be taken to prevent the situation described above from occurring.

Since an unsafe condition has been identified that is likely to exist or develop in other Fairchild Aircraft SA226 and SA227 series airplanes of the same type design that utilize a direct current (DC) generator, the proposed AD would require relocating the LH and RH essential bus current limiters (225 amp) to the battery bus (main bus tie). Accomplishment of the proposed modification would be in accordance with Fairchild Aircraft Engineering Kit Drawing 27K82376, ''Current Limiter Rebussing Kit,'' as referenced in Fairchild SB 226–24–034, SB 227–24–015, and SB CC7–24–002, all Issued: September 29, 1994.

The FAA estimates that 622 airplanes in the U.S. registry would be affected by the proposed AD, that it would take approximately 4 workhours per airplane to accomplish the proposed action, and that the average labor rate is approximately $60 an hour. Parts cost approximately $98 per airplane. Based on these figures, the total cost impact of the proposed AD on U.S. operators is estimated to be $210,236 ($338 per airplane). This figure is based on the assumption that no affected airplane owner/operator has incorporated the proposed modification. Fairchild Aircraft has informed the FAA that parts have not been distributed to any owner/operator of the affected airplanes.

The regulations proposed herein would not have substantial direct effects on the States, on the relationship between the national government and the States, or on the distribution of power and responsibilities among the various levels of government. Therefore, in accordance with Executive Order 12612, it is determined that this proposal would not have sufficient federalism implications to warrant the preparation of a Federalism Assessment.

For the reasons discussed above, I certify that this action (1) is not a ''significant regulatory action'' under Executive Order 12866; (2) is not a ''significant rule'' under DOT Regulatory Policies and Procedures (44 FR 11034, February 26, 1979); and (3) if promulgated, will not have a significant economic impact, positive or negative, on a substantial number of small entities under the criteria of the Regulatory Flexibility Act. A copy of the draft regulatory evaluation prepared for this action has been placed in the Rules Docket. A copy of it may be obtained by contacting the Rules Docket at the location provided under the caption **ADDRESSES**.

List of Subjects in 14 CFR Part 39

Air transportation, Aircraft, Aviation safety, Safety.

The Proposed Amendment

Accordingly, pursuant to the authority delegated to me by the Administrator, the Federal Aviation Administration proposes to amend part 39 of the Federal Aviation Regulations (14 CFR part 39) as follows:

PART 39—AIRWORTHINESS DIRECTIVES

1. The authority citation for part 39 continues to read as follows:

Authority: 49 U.S.C. App. 1354(a), 1421 and 1423; 49 U.S.C. 106(g); and 14 CFR 11.89.

§ 39.13 [Amended]

2. Section 39.13 is amended by adding a new AD to read as follows:

Fairchild Aircraft: Docket No. 95–CE–13–AD.

Applicability: The following model and serial number airplanes that utilize a direct current (DC) generator, certificated in any category.

Models	Serial Nos.
SA226–T, SA226–AT, SA226–TC, and SA226–T(B).	All.
SA227–AC, SA227–AT, SA227–BC, and SA227–TT.	1 through 733.
SA227–CC and SA227–DC.	784, and 790 through 883.

Note 1: This AD applies to each airplane identified in the preceding applicability provision, regardless of whether it has been modified, altered, or repaired in the area subject to the requirements of this AD. For airplanes that have been modified, altered, or repaired so that the performance of the requirements of this AD is affected, the owner/operator must use the authority provided in paragraph (c) of this AD to request approval from the FAA. This approval may address either no action, if the current configuration eliminates the unsafe condition, or different actions necessary to address the unsafe condition described in this AD. Such a request should include an assessment of the effect of the changed configuration on the unsafe condition addressed by this AD. In no case does the presence of any modification, alteration, or repair remove any aircraft from the applicability of this AD.

Compliance: Required within the next 2,000 hours time-in-service after the effective date of this AD, unless already accomplished.

To prevent failure of the left hand (LH) and right hand (RH) essential bus when engine failure results in a blown generator current limiter, which could result in loss of airplane electrical power, accomplish the following:

(a) Relocate the LH and RH essential bus current limiters (225 amp) to the battery bus (main bus tie) in accordance with Fairchild Aircraft Engineering Kit Drawing 27K82376, ''Current Limiter Rebussing Kit,'' as referenced in the following service bulletins (SB):

SB	Date	Models affected
226–24–034	September 29, 1994	All affected SA226 models.
227–24–05	September 29, 1994	SA227–AD, SA227-AT, SA227–BC, and SA227-TT.
CC7–24–002	September 29, 1994	SA227–CC and SA227–DC.

(b) Special flight permits may be issued in accordance with sections 21.197 and 21.199 of the Federal Aviation Regulations (14 CFR 21.197 and 21.199) to operate the airplane to a location where the requirements of this AD can be accomplished.

(c) An alternative method of compliance or adjustment of the compliance time that provides an equivalent level of safety may be approved by the Manager, Fort Worth Airplane Certification Office (ACO), FAA, 2601 Meacham Boulevard, Fort Worth, Texas 76193–0150. The request shall be forwarded through an appropriate FAA Maintenance Inspector, who may add comments and then send it to the Manager, Fort Worth ACO.

Note 2: Information concerning the existence of approved alternative methods of compliance with this AD, if any, may be obtained from the Fort Worth ACO.

(d) All persons affected by this directive may obtain copies of the document referred to herein upon request to Fairchild Aircraft, P.O. Box 790490, San Antonio, Texas 78279–0490; or may examine this document at the FAA, Central Region, Office of the Assistant Chief Counsel, Room 1558, 601 E. 12th Street, Kansas City, Missouri 64106.

Issued in Kansas City, Missouri, on March 10, 1995.

Barry D. Clements,

Manager, Small Airplane Directorate, Aircraft Certification Service.

[FR Doc. 95–6471 Filed 3–15–95; 8:45 am]

BILLING CODE 4910–13–U

14 CFR Part 39

[Docket No. 95–NM–17–AD]

Airworthiness Directives; Jetstream Model 4101 Airplanes

AGENCY: Federal Aviation Administration, DOT.

ACTION: Notice of proposed rulemaking (NPRM).

SUMMARY: This document proposes the adoption of a new airworthiness directive (AD) that is applicable to certain Jetstream Model 4101 airplanes. This proposal would require replacement of a certain pressure switch with a certain new pressure switch in the fuel system for the engines. This proposal is prompted by a report indicating that the current design of a certain pressure switch in the fuel system for the engines does not meet current fire resistant properties, which could result in the failure of the pressure switch during a fire in the engine compartment. The actions specified by the proposed AD are intended to prevent failure of the existing pressure switch in the fuel system for the engines, which, during an engine fire, could result in fuel leakage that could add fuel to the fire.

DATES: Comments must be received by April 10, 1995.

ADDRESSES: Submit comments in triplicate to the Federal Aviation Administration (FAA), Transport Airplane Directorate, ANM–103, Attention: Rules Docket No. 95–NM–17–AD, 1601 Lind Avenue, SW., Renton, Washington 98055–4056. Comments may be inspected at this location between 9:00 a.m. and 3:00 p.m., Monday through Friday, except Federal holidays.

The service information referenced in the proposed rule may be obtained from Jetstream Aircraft, Inc., P.O. Box 16029, Dulles International Airport, Washington, DC 20041–6029. This information may be examined at the FAA, Transport Airplane Directorate, 1601 Lind Avenue, SW., Renton, Washington.

FOR FURTHER INFORMATION CONTACT: William Schroeder, Aerospace Engineer, Standardization Branch, ANM–113, FAA, Transport Airplane Directorate, 1601 Lind Avenue, SW., Renton, Washington 98055–4056; telephone (206) 227–2148; fax (206) 227–1320.

SUPPLEMENTARY INFORMATION:

Comments Invited

Interested persons are invited to participate in the making of the proposed rule by submitting such written data, views, or arguments as they may desire. Communications shall identify the Rules Docket number and be submitted in triplicate to the address specified above. All communications received on or before the closing date for comments, specified above, will be considered before taking action on the proposed rule. The proposals contained in this notice may be changed in light of the comments received.

Comments are specifically invited on the overall regulatory, economic, environmental, and energy aspects of the proposed rule. All comments submitted will be available, both before and after the closing date for comments, in the Rules Docket for examination by interested persons. A report summarizing each FAA-public contact concerned with the substance of this proposal will be filed in the Rules Docket.

Commenters wishing the FAA to acknowledge receipt of their comments submitted in response to this notice must submit a self-addressed, stamped postcard on which the following statement is made: ''Comments to Docket Number 95–NM–17–AD.'' The postcard will be date stamped and returned to the commenter.

Availability of NPRMs

Any person may obtain a copy of this NPRM by submitting a request to the FAA, Transport Airplane Directorate, ANM–103, Attention: Rules Docket No. 95–NM–17–AD, 1601 Lind Avenue, SW., Renton, Washington 98055–4056.

Discussion

The Civil Aviation Authority (CAA), which is the airworthiness authority for the United Kingdom, recently notified the FAA that an unsafe condition may exist on certain Jetstream Model 4101 airplanes. The CAA advises that, during a design review of the fuel system, the manufacturer determined that the current design of the pressure switch having part number (P/N) 1153P0073 in the fuel system of the left and right engine does not meet the fire resistant properties, as required by section 25.1183 (a) of the Federal Aviation Regulations (14 CFR 25.1183), ''Flammable fluid-carrying components.''

If a fire in the engine compartment occurred, the existing pressure switch in the fuel system for the left and right engine could fail. If the pressure switch fails, fuel leakage could occur during an engine fire, which could add fuel to the fire.

Jetstream has issued Service Bulletin J41–73–007, dated November 22, 1994, which describes procedures for replacement of the pressure switch having P/N 1153P0073 with a new pressure switch having P/N 1153P0094 in the fuel system for the left and right engines. The new pressure switch has been redesigned to meet the fire resistance requirements of section 25.1183(a) of the Federal Aviation Regulations [14 CFR 25.1183 (a)]. The pressure switch provides a warning to the flight crew if fuel filter blockage begins to occur. The CAA classified this service bulletin as mandatory in order to assure the continued airworthiness of these airplanes in the United Kingdom.

This airplane model is manufactured in the United Kingdom and is type certificated for operation in the United States under the provisions of section 21.29 of the Federal Aviation Regulations (14 CFR 21.29) and the applicable bilateral airworthiness agreement. Pursuant to this bilateral airworthiness agreement, the CAA has kept the FAA informed of the situation described above. The FAA has examined the findings of the CAA, reviewed all available information, and determined that AD action is necessary for products of this type design that are certificated for operation in the United States.

Since an unsafe condition has been identified that is likely to exist or develop on other airplanes of the same type design registered in the United States, the proposed AD would require replacement of a certain pressure switch with a certain new pressure switch in the fuel system of the left and right engine. The actions would be required to be accomplished in accordance with the service bulletin described previously.

As a result of recent communications with the Air Transport Association (ATA) of America, the FAA has learned that, in general, some operators may misunderstand the legal effect of AD's on airplanes that are identified in the applicability provision of the AD, but that have been altered or repaired in the area addressed by the AD. The FAA points out that all airplanes identified in the applicability provision of an AD are legally subject to the AD. If an airplane has been altered or repaired in the affected area in such a way as to affect compliance with the AD, the owner or operator is required to obtain FAA approval for an alternative method of compliance with the AD, in accordance with the paragraph of each AD that provides for such approvals. A note has been included in this notice to clarify this long standing requirement.

The FAA estimates that 15 airplanes of U.S. registry would be affected by this proposed AD, that it would take

approximately 3 work hours per airplane to accomplish the proposed actions, and that the average labor rate is $60 per work hour. Required parts would be supplied by the manufacturer at no cost to the operators. Based on these figures, the total cost impact of the proposed AD on U.S. operators is estimated to be $2,700, or $180 per airplane.

The total cost impact figure discussed above is based on assumptions that no operator has yet accomplished any of the proposed requirements of this AD action, and that no operator would accomplish those actions in the future if this AD were not adopted.

The regulations proposed herein would not have substantial direct effects on the States, on the relationship between the national government and the States, or on the distribution of power and responsibilities among the various levels of government. Therefore, in accordance with Executive Order 12612, it is determined that this proposal would not have sufficient federalism implications to warrant the preparation of a Federalism Assessment.

For the reasons discussed above, I certify that this proposed regulation (1) is not a ''significant regulatory action'' under Executive Order 12866; (2) is not a ''significant rule'' under the DOT Regulatory Policies and Procedures (44 FR 11034, February 26, 1979); and (3) if promulgated, will not have a significant economic impact, positive or negative, on a substantial number of small entities under the criteria of the Regulatory Flexibility Act. A copy of the draft regulatory evaluation prepared for this action is contained in the Rules Docket. A copy of it may be obtained by contacting the Rules Docket at the location provided under the caption **ADDRESSES.**

List of Subjects in 14 CFR Part 39

Air transportation, Aircraft, Aviation safety, Safety.

The Proposed Amendment

Accordingly, pursuant to the authority delegated to me by the Administrator, the Federal Aviation Administration proposes to amend part 39 of the Federal Aviation Regulations (14 CFR part 39) as follows:

PART 39—AIRWORTHINESS DIRECTIVES

1. The authority citation for part 39 continues to read as follows:

Authority: 49 U.S.C. App. 1354(a), 1421 and 1423; 49 U.S.C. 106(g); and 14 CFR 11.89.

§ 39.13 [Amended]

2. Section 39.13 is amended by adding the following new airworthiness directive:

Jetstream Aircraft Limited: Docket 95–NM–17–AD.

Applicability: Model 4101 airplanes, constructors numbers 41004 through 41046 inclusive, certificated in any category.

Note 1: This AD applies to each airplane identified in the preceding applicability provision, regardless of whether it has been modified, altered, or repaired in the area subject to the requirements of this AD. For airplanes that have been modified, altered, or repaired so that the performance of the requirements of this AD is affected, the owner/operator must use the authority provided in paragraph (c) to request approval from the FAA. This approval may address either no action, if the current configuration eliminates the unsafe condition; or different actions necessary to address the unsafe condition described in this AD. Such a request should include an assessment of the effect of the changed configuration on the unsafe condition addressed by this AD. In no case does the presence of any modification, alteration, or repair remove any airplane from the applicability of this AD.

Compliance: Required as indicated, unless accomplished previously.

To prevent failure of the existing pressure switch in the fuel system of the left and right engine, which, during an engine fire, could result in fuel leakage that could add fuel to the fire, accomplish the following:

(a) Within 60 days after the effective date of this AD, replace pressure switch having part number (P/N) 1153P0073 with a new pressure switch having P/N 1153P0094 in the fuel system of the left and right engine, in accordance with Jetstream Service Bulletin J41–73–007, dated November 22, 1994.

(b) As of the effective date of this AD, no person shall install a pressure switch, P/N 1153P0073, on any airplane.

(c) An alternative method of compliance or adjustment of the compliance time that provides an acceptable level of safety may be used if approved by the Manager, Standardization Branch, ANM–113, FAA, Transport Airplane Directorate. Operators shall submit their requests through an appropriate FAA Principal Maintenance Inspector, who may add comments and then send it to the Manager, Standardization Branch, ANM–113.

Note 2: Information concerning the existence of approved alternative methods of compliance with this AD, if any, may be obtained from the Standardization Branch, ANM–113.

(d) Special flight permits may be issued in accordance with sections 21.197 and 21.199 of the Federal Aviation Regulations (14 CFR 21.197 and 21.199) to operate the airplane to a location where the requirements of this AD can be accomplished.

Issued in Renton, Washington, on March 10, 1995.

Neil D. Schalekamp,

Acting Manager, Transport Airplane Directorate, Aircraft Certification Service.

[FR Doc. 95–6469 Filed 3–15–95; 8:45 am]

BILLING CODE 4910–13–U

---

14 CFR Part 71

[Airspace Docket No. 95–ASO–5]

Proposed Establishment of Class D and E Airspace, Amendment to Class D and E Airspace and Removal of Class E Airspace; Marietta, GA

AGENCY: Federal Aviation Administration (FAA), DOT.

ACTION: Notice of proposed rulemaking.

SUMMARY: This notice proposes to establish Class D airspace for Cobb County-McCollum Field, amend the Class D and E airspace for Dobbins ARB (NAS Atlanta), and remove the Class E surface area extension for Dobbins ARB (NAS Atlanta) at Marietta, GA. This proposed action would also establish Class E airspace for Cobb County-McCollum Field when the control tower is closed. Cobb County-McCollum Field currently is included in the Dobbins ARB (NAS Atlanta) Class D airspace area. A non-federal tower has been commissioned at Cobb County-McCollum Field which has a LOC RWY 27 Standard Instrument Procedure (SIAP) and a VOR/DME or GPS RWY 9 SIAP. Class D and E airspace to the surface is required to accommodate these SIAPs and contain instrument flight rule (IFR) operations at Cobb County-McCollum Field. As a result of this proposed action the Dobbins ARB (NAS Atlanta) Class D and E airspace to the surface would be reduced and the Class E surface area extension would be removed concurrent with the establishment of the Class D and E airspace area for Cobb County-McCollum Field. This amendment would also make a technical correction to the name and location of Atlanta Dobbins AFB, GA. The correct name and location is Dobbins ARB (NAS Atlanta), Marietta, GA.

DATES: Comments must be received on or before April 28, 1995.

ADDRESSES: Send comments on the proposal in triplicate to: Federal Aviation Administration, Docket No. 95–ASO–5 Manager, System Management Branch, ASO–530, P.O. Box 20636, Atlanta, Georgia 30320.

The official docket may be examined in the Office of the Assistant Chief Counsel for Southern Region, Room 550,

1701 Columbia Avenue, College Park, Georgia 30337, telephone (404) 305–5586.

FOR FURTHER INFORMATION CONTACT: Michael J. Powderly, System Management Branch, Air Traffic Division, Federal Aviation Administration, P.O. Box 20636, Atlanta, Georgia 30320; telephone (404) 305–5570.

SUPPLEMENTARY INFORMATION:

Comments Invited

Interested parties are invited to participate in this proposed rulemaking by submitting such written data, views or arguments as they may desire. Comments that provide the factual basis supporting the views and suggestions presented are particularly helpful in developing reasoned regulatory decisions on the proposal. Comments are specifically invited on the overall regulatory, aeronautical, economic environmental, and energy-related aspects of the proposal. Communications should identify the airspace docket and be submitted in triplicate to the address listed above. Commenters wishing the FAA to acknowledge receipt of their comments on this notice must submit with those comments a self-addressed, stamped postcard on which the following statement is made: ''Comments to Airspace Docket No. 95–ASO–5.'' The postcard will be date/time stamped and returned to the commenter. All communications received before the specified closing date for comments will be considered before taking action on the proposed rule. The proposal contained in this notice may be changed in the light of comments received. All comments submitted will be available for examination in the Office of the Assistant Chief Counsel for Southern Region, Room 550, 1701 Columbia Avenue, College Park, Georgia 30337, both before and after the closing date for comments. A report summarizing each substantive public contact with FAA personnel concerned with this rulemaking will be filed in the docket.

Availability of NPRMs

Any person may obtain a copy of this Notice of Proposed Rulemaking (NPRM) by submitting a request to the Federal Aviation Administration, Manager, System Management Branch, ASO–530, Air Traffic Division, P.O. Box 20636, Atlanta, Georgia 30320. Communications must identify the notice number of this NPRM. Persons interested in being placed on a mailing list for future NPRM's should also request a copy of Advisory Circular No. 11–2A which describes the application procedure.

The Proposal

The FAA is considering an amendment to part 71 of the Federal Aviation Regulations (14 CFR part 71) to establish Class D airspace for Cobb County-McCollum Field, amend the Class D and E airspace for Dobbins AFB (NAS Atlanta), and remove the Class E surface area extension for Dobbins ARB (NAS Atlanta) at Marietta, GA. This proposed action would also establish Class E airspace for Cobb County-McCollum Field when the control tower is closed. Cobb County-McCollum Field currently is included in the Dobbins ARB (NAS Atlanta) Class D airspace area. A non-federal tower has been commissioned at Cobb County-McCollum Field. Class D and E airspace to the surface is required to accommodate current SIAPs and contain IFR operations at Cobb County-McCollum Field. As a result of this proposed action the Dobbins ARB (NAS Atlanta) Class D and E airspace to the surface would be reduced and the Class E surface areas extension would be removed concurrent with the establishment of the Class D airspace area for Cobb County-McCollum Field. This amendment would also make a technical correction to the name and location of Atlanta Dobbins AFB, GA. The correct name and location is Dobbins ARB (NAS Atlanta), Marietta, GA. Class D airspace designations, Class E airspace areas designated as a surface area for an airport, and Class E airspace area designated as an extension to a Class D surface areas are published in Paragraphs 5000, 6002, and 6004 respectively of FAA Order 7400.9B dated July 18, 1994 and effective September 16, 1994 which is incorporated by reference in CFR 71.1. The Class D and E airspace designations listed in this document would be published subsequently in the Order.

The FAA has determined that this proposed regulation only involves an established body of technical regulations for which frequent and routine amendments are necessary to keep them operationally current. It, therefore, (1) is not a ''significant regulatory action'' under Executive Order 12866; (2) is not a ''significant rule'' under DOT Regulatory Policies and Procedures (44 FR 11034; February 26, 1979); and (3) does not warrant preparation of a regulatory evaluation as the anticipated impact is so minimal. Since this is a routine matter that will only affect air traffic procedures and air navigation, it is certified that this rule, when promulgated, will not have a significant economic impact on a substantial number of small entities under the criteria of the Regulatory Flexibility Act.

List of Subjects in 14 CFR Part 71

Airspace, Incorporation by reference, Navigation (Air).

The Proposed Amendment

In consideration of the foregoing, the Federal Aviation Administration proposes to amend 14 CFR part 71 as follows:

PART 71—[AMENDED]

1. The authority citation for 14 CFR part 71 continues to read as follows:

Authority: 49 U.S.C. app. 1348(a), 1354(a), 1510; E.O. 10854, 24 FR 9565, 3 CFR, 1959–1963 Comp., p. 389; 49 U.S.C. 106(g); 14 CFR 11.69.

§ 71.1 [Amended]

2. The incorporation by reference in 14 CFR 71.1 of Federal Aviation Administration Order 7400.9B, Airspace Designations and Reporting Points, dated July 18, 1994 and effective September 16, 1994, is amended as follows:

Paragraph 5000 Class D Airspace.

* * * * *

ASO GA D Marietta, GA [New]

Cobb County-McCollum Field, GA
(Lat. 34°00′47″ N, long. 84°35′55″ W)
Dobbins ARB (NAS Atlanta)
(Lat. 33°54′55″ N, long. 84°30′59″ W)

That airspace extending upward from the surface to and including 3500 feet MSL within a 4-mile radius of Cobb County-McCollum Field, excluding that airspace southeast of a line connecting the 2 points of intersection with a 5.5-mile radius centered on Dobbins ARB (NAS Atlanta). This Class D airspace area is effective during the specific days and times established in advance by a Notice to Airmen. The effective days and times will thereafter be continuously published in the Airport/Facility Directory.

* * * * *

ASO GA D Marietta, GA [Revised]

Dobbins ARB (NAS Atlanta), GA
(Lat. 33°54′55″ N, long. 84°30′59″ W)
Cobb County-McCollum Field
(Lat. 34°00′47″ N, long. 84°35′55″ W)
Fulton County Airport-Brown Field
(Lat. 33°46′45″ N, long. 84°31′17″ W)

That airspace extending upward from the surface to and including 3600 feet MSL within a 5.5-mile radius of Dobbins ARB (NAS Atlanta), excluding airspace northwest of a line connecting the 2 points of intersection with a 4-mile radius centered on Cobb County-McCollum Field, and also excluding that airspace south of a line connecting the 2 points of intersection with a 4-mile radius centered on Fulton County Airport-Brown Field. This Class D airspace

area is effective during the specific days and times established in advance by a Notice to Airmen. The effective days and times will thereafter be continuously published in the Airport/Facility Directory.

* * * * *

Paragraph 6002 Class E Airspace Areas Designated as a Surface Area for an Airport.

* * * * *

ASO GA E2 Marietta, GA [New]

Cobb County-McCollum Field, GA
(Lat. 34°00′47″ N, long. 84°35′55″ W)
Dobbins ARB (NAS Atlanta)
(Lat. 35°54′55″ N, long. 84°30′59″ W)

Within a 4-mile radius of Cobb County-McCollum Field, excluding that airspace southeast of a line connecting the 2 points of intersection with a 5.5-mile radius centered on Dobbins ARB (NAS Atlanta). This Class E airspace area is effective during the specific days and times established in advance by a Notice to Airmen. The effective days and times will thereafter be continuously published in the Airport/Facility Directory.

* * * * *

ASO GA E2 Marietta, GA [Revised]

Dobbins ARB (NAS Atlanta), GA
(Lat. 33°54′55″ N, long. 84°30′59″ W)
Cobb County-McCollum Field
(Lat. 34°00′47″ N, long. 84°35′55″ W)
Fulton County Airport-Brown Field
(Lat. 33°46′45″ N, long. 84°31′17″ W)

Within a 5.5-mile radius of Dobbins ARB (NAS Atlanta), excluding that airspace northwest of a line connecting the 2 points of intersection with a 4-mile radius centered on Cobb County-McCollum Field, and also excluding that airspace south of a line connecting the 2 points of intersection with a 4-mile radius centered on Fulton County Airport-Brown Field. This Class E airspace area is effective during the specific days and times established in advance by a Notice to Airmen. The effective days and times will thereafter be continuously published in the Airport/Facility Director.

* * * * *

Paragraph 6004 Class E Airspace Areas Designated as an Extension to a Class D Surface Area.

* * * * *

ASO GA E4 Atlanta Dobbins AFB, GA [Removed]

* * * * *

Issued in College Park, Georgia, on March 6, 1995.

Michael J. Powderly,

Acting Manager, Air Traffic Division, Southern Region.

[FR Doc. 95–6514 Filed 3–15–95; 8:45 am]

BILLING CODE 4910–13–M

14 CFR Part 71

[Airspace Docket No. 95–ANM–8]

Proposed Amendment to Class D Airspace; Ogden, Utah

AGENCY: Federal Aviation Administration (FAA), DOT.

ACTION: Notice of proposed rulemaking.

SUMMARY: This proposed rule would amend the Ogden, Utah, Class D airspace, based on the results of an airspace review. This proposal would amend the ceiling altitude and the geographic size of the Ogden, Utah, Class D airspace area. The amendment would bring publications up-to-date giving continuous information to the aviation public.

DATES: Comments must be received on or before April 15, 1995.

ADDRESSES: Send comments on the proposal in triplicate to: Manager, System Management Branch, ANM–530, Federal Aviation Administration, Docket No. 95–ANM–8, 1601 Lind Avenue S.W., Renton, Washington 98055–4056.

The official docket may be examined at the same address.

An informal docket may also be examined during normal business hours at the address listed above.

FOR FURTHER INFORMATION CONTACT: James Riley, System Management Branch, ANM–530, Federal Aviation Administration, Docket No. 95–ANM–8, 1601 Lind Avenue S.W., Renton, Washington 98055–4056; telephone number: (206) 227–2537.

SUPPLEMENTARY INFORMATION:

Comments Invited

Interested parties are invited to participate in this proposed rulemaking by submitting such written data, views, or arguments as they may desire. Comments that provide the factual basis supporting the views and suggestions presented are particularly helpful in developing reasoned regulatory decisions on the proposal. Comments are specifically invited on the overall regulatory, aeronautical, economic, environmental, and energy-related aspects of the proposal. Communications should identify the airspace docket number and be submitted in triplicate to the address listed above. Commenters wishing the FAA to acknowledge receipt of their comments on this notice must submit with those comments a self-addressed, stamped postcard on which the following statement is made: ''Comments to Airspace Docket No. 95–ANM–8.'' The postcard will be date/time stamped and returned to the commenter. All communications received on or before the specified closing date for comments will be considered before taking action on the proposed rule. The proposal contained in this notice may be changed in light of comments received. All comments submitted will be available for examination at the address listed above both before and after the closing date for comments. A report summarizing each substantive public contact with FAA personnel concerned with this rulemaking will be filed in the docket.

Availability of NPRM's

Any person may obtain a copy of this Notice of Proposed Rulemaking (NPRM) by submitting a request to the Federal Aviation Administration, System Management Branch, ANM–530, 1601 Lind Avenue S.W., Renton, Washington 98055–4056. Communications must identify the notice number of this NPRM. Persons interested in being placed on a mailing list for future NPRM's should also request a copy of Advisory Circular No. 11–2A, which describes the application procedure.

The Proposal

The FAA is considering an amendment to part 71 of the Federal Aviation Regulations (14 CFR part 71) to amend Class D airspace at Ogden, Utah. This proposal would amend the ceiling altitude and the geographic size of the Ogden, Utah, Class D airspace area. The coordinates for this airspace docket are based on North American Datum 83. Class D airspace is published in Paragraph 5000 of FAA Order 7400.9B dated July 18, 1994, and effective September 16, 1994, which is incorporated by reference in 14 CFR 71.1. The Class D airspace designation listed in this document would be published subsequently in the Order.

The FAA has determined that this proposed regulation only involves an established body of technical regulations for which frequent and routine amendments are necessary to keep them operationally current. It, therefore, (1) is not a ''significant regulatory action'' under Executive Order 12866; (2) is not a ''significant rule'' under DOT Regulatory Policies and Procedures (44 FR 11034; February 26, 1979); and (3) does not warrant preparation of a regulatory evaluation as the anticipated impact is so minimal. Since this is a routine matter that will only affect air traffic procedures and air navigation, it is certified that this rule, when promulgated, will not have a significant economic impact on a substantial number of small entities

under the criteria of the Regulatory Flexibility Act.

List of Subjects in 14 CFR Part 71

Airspace, Incorporation by reference, Navigation (air).

The Proposed Amendment

In consideration of the foregoing, the Federal Aviation Administration proposes to amend 14 CFR part 71 as follows:

PART 71—[AMENDED]

1. The authority citation for 14 CFR part 71 continues to read as follows:

Authority: 49 U.S.C. app. 1348(a), 1354(a), 1510; E.O. 10854, 24 FR 9565, 3 CFR, 1959–1963 Comp., 389; 49 U.S.C. 106(g); 14 CFR 11.69.

§ 71.1 [Amended]

2. The incorporation by reference in 14 CFR 71.1 of the Federal Aviation Administration Order 7400.9B, Airspace Designations and Reporting Points, dated July 18, 1994, and effective September 16, 1994, is amended as follows:

Paragraph 5000 Class D Airspace

* * * * *

ANM UT D Ogden-Hinckley Airport, UT [Revised]

Ogden-Hickley Airport, UT
(Lat. 41°11′46″ N, long. 112°00′44″ W)
Ogden, Hill AFB, UT
(Lat. 41°07′25″ N, long. 111°58′23″ W)

That airspace extending upward from the surface up to, but not including, 7,800 feet MSL within a 4.3-mile radius of the Ogden-Hinkley Airport, excluding the portion south of a line beginning east of the airport at the intersection of the 4.3-mile radius of the Ogden-Hinckley Airport and the 4.3-mile radius of the Hill AFB, extending west to the intersection of the 4.3-mile radius of the Ogden-Hinckley and the 4.3-mile radius of the Hill AFB. This Class D airspace area is effective during the specific dates and times established in advance by a Notice to Airmen. The effective date and time will thereafter be published in the Airport/Facility Directory.

* * * * *

Issued in Seattle, Washington, on March 6, 1995.

Richard E. Prang,

Acting Manager, Air Traffic Division, Northwest Mountain Region

[FR Doc. 95–6513 Filed 3–15–95; 8:45 am]

BILLING CODE 4910–13–M

DEPARTMENT OF COMMERCE

National Oceanic and Atmospheric Administration

15 CFR Part 944

Restricting or Prohibiting Attracting Sharks by Chum or Other Means in the Monterey Bay National Marine Sanctuary; Public Hearing

AGENCY: Sanctuaries and Reserves Division (SRD), Office of Ocean and Coastal Resource Management (OCRM), National Ocean Service (NOS), National Oceanic and Atmospheric Administration (NOAA), Department of Commerce.

ACTION: Notice of public hearing.

SUMMARY: The National Oceanic and Atmospheric's Sanctuaries and Reserves Division (SRD) is considering amending the regulations for the Monterey Bay National Marine Sanctuary (MBNMS or Sanctuary) to restrict or prohibit the attracting of sharks by the use of chum or other means in the MBNMS. An advance notice of proposed rulemaking published February 28, 1995 (60 FR 10812) discussed the reasons SRD is considering restricting or prohibiting this activity in the MBNMS. A 30-day comment period closes on March 30, 1995. A public hearing has been scheduled to assist in maximizing public comment on this issue. Individuals wishing to make a statement will be required to sign up at the door and will be limited to three minutes.

DATES: The hearing will be held on Wednesday, March 22, 1995, starting at 7:00 p.m.

ADDRESSES: The hearing will be held at the Cabrillo College, 500 Building, Room 507, 6500 Soquel Drive, Aptos, California, 95003.

FOR FURTHER INFORMATION CONTACT: Aaron King at (408) 647–4257 or Elizabeth Moore at (301) 713–3141.

(Federal Domestic Assistance Catalog Number 11.429, Marine Sanctuary Program)

Dated: March 13, 1995.

W. Stanley Wilson,

Assistant Administrator for Ocean Services and Coastal Zone Management.

[FR Doc. 95–6642 Filed 3–15–95; 8:45 am]

BILLING CODE 3510–08–M

RAILROAD RETIREMENT BOARD

20 CFR Part 335

RIN: 3220–AB11

Sickness Benefits

AGENCY: Railroad Retirement Board.

ACTION: Proposed rule.

SUMMARY: The Railroad Retirement Board (Board) hereby proposes to amend its regulations under the Railroad Unemployment Insurance Act (RUIA) to permit a ''physician assistant-certified'' to execute a statement of sickness in support of payments of sickness benefits under the RUIA. The proposed rule would also eliminate certain obsolete language.

DATES: Comments must be submitted on or before April 17, 1995.

ADDRESSES: Secretary to the Board, Railroad Retirement Board, 844 Rush Street, Chicago, Illinois 60611.

FOR FURTHER INFORMATION CONTACT: Thomas W. Sadler, Assistant General Counsel, Railroad Retirement Board, 844 Rush Street, Chicago, Illinois 60611, (312) 751–4513, TDD (312) 751–4701, TDD (FTS (312) 386–4701).

SUPPLEMENTARY INFORMATION: Section 335.2(a)(2) provides that in order to be entitled to sickness benefits under the RUIA, a claimant must provide a ''statement of sickness''. Section 335.3(a) of the Board's regulations lists the individuals from whom the Board will accept a statement of sickness. That list does not currently include physician assistants. In many parts of the country, physician assistants are more accessible (and their services less expensive) than licensed medical doctors (MD's). Under present regulations, the Board will not accept a statement of sickness or supplemental statement of sickness from a physician assistant unless there is some followup verification that the physician assistant completed the statement under the supervision of an MD. This is administratively costly and in many cases unnecessarily delays payment of sickness benefits. Thus, the Board proposes to add ''physician assistant-certified'' to its list of individuals from whom it will accept a statement of sickness.

The Board also proposes to amend section 335.4(d)(5) of its regulations by deleting the first sentence of paragraph (d)(5), which relates to the filing of a statement of sickness by a female employee whose claim for sickness benefits is based upon pregnancy, miscarriage or childbirth. The special form required by paragraph (d)(5) is no longer used, since, for purposes of filing for sickness benefits, a distinction is no longer made between pregnancy, miscarriage or childbirth and other illnesses.

The Board has determined that this is not a major rule for purposes of Executive Order 12866. Therefore, no regulatory analysis is required. The

information collections contemplated by this part have been approved by the Office of Management and Budget under control number 3220–0039.

List of Subjects in 20 CFR Part 335

Railroad employees, Railroad sickness benefits.

For the reasons set out in the preamble, title 20, chapter II of the Code of Federal Regulations is amended as follows:

PART 335—SICKNESS BENEFITS

1. The authority citation for part 335 continues to read as follows:

Authority: 45 U.S.C. 362(i) and 362(l).

2. Section 335.3(a) is amended by removing ''or'' at the end of paragraph (a)(6) of this section, by replacing the period at the end of paragraph (a)(7) of this section with ''; or'', and by adding a new paragraph (a)(8) to read as follows:

§ 335.3 Execution of statement of sickness and supplemental doctor's statement.

(a) *Who may execute.* * * *

* * * * *

(8) A physician assistant-certified (PAC)

* * * * *

§ 335.4 [Amended]

3. Section 335.4(d)(5) is amended by removing the first sentence of section 335.4(d)(5).

Dated: March 7, 1995.

By Authority of the Board.

Beatrice Ezerski,

Secretary to the Board.

[FR Doc. 95–6491 Filed 3–15–95; 8:45 am]

BILLING CODE 7905–01–M

DEPARTMENT OF TRANSPORTATION

Coast Guard

33 CFR Part 165

[CGD01–95–023]

RIN 2115–AA97

Safety Zone: USS AMERICA, Fleet Week '95, Port of New York and New Jersey

AGENCY: Coast Guard, DOT.

ACTION: Notice of proposed rulemaking.

SUMMARY: The Coast Guard proposes to establish a temporary safety zone on May 24, 1995, and May 31, 1995, for the arrival and departure of the USS AMERICA for Fleet Week '95. This moving safety zone would be established 500 yards fore and aft, and 200 yards on each side of the USS AMERICA as it transits the Port of New York and New Jersey between Ambrose Channel Lighted Whistle Buoy ''A'' and its berth.

DATES: Comments must be received on or before April 17, 1995.

ADDRESSES: Comments should be mailed to U.S. Coast Guard Group, New York, Bldg. 108, Governors Island, New York 10004–5096, or may be delivered to the Maritime Planning Staff, Bldg. 108, between 8 a.m. and 4 p.m., Monday through Friday, except Federal holidays. Any person wishing to visit the office must contact the Maritime Planning Staff at (212) 668–7934 to obtain advance clearance, due to the fact that Governors Island is a military installation with limited access.

FOR FURTHER INFORMATION CONTACT: Lieutenant (Junior Grade) K. Messenger, Maritime Planning Staff Chief, Coast Guard Group, New York, (212) 668–7934.

SUPPLEMENTARY INFORMATION:

Request for Comments

The Coast Guard encourages interested persons to participate in this rulemaking by submitting written data, views, or arguments. A 30 day comment period is deemed to be sufficiently reasonable notice to all interested persons. Since this proposed rulemaking is neither complex nor technical, a longer comment period is unnecessary and contrary to the public interest. Any delay in publishing a final rule would effectively cancel this event.

Persons submitting comments should include their names and addresses, identify this notice (CGD01–95–023) and the specific section of the proposal to which their comments apply, and give reasons for each comment. Persons wanting acknowledgment of receipt of comments should enclose a stamped, self-addressed postcard or envelope.

The Coast Guard will consider all comments received during the comment period. It may change this proposal in view of the comments. The Coast Guard plans no public hearing; however, persons may request a public hearing by writing to the Project Manager at the address under **ADDRESSES**. If it is determined that the opportunity for oral presentations will aid this rulemaking, the Coast Guard will hold a public hearing at a time and place announced by a later notice in the **Federal Register**.

Drafting Information

The drafters of this notice are LTJG K. Messenger, Project Manager, Coast Guard Group New York and LCDR J. Stieb, Project Attorney, First Coast Guard District, Legal Office.

Background and Purpose

The Intrepid Museum Foundation is sponsoring Fleet Week '95. The USS AMERICA has been designated as the Fleet Week Flagship and will be entering the Port of New York and New Jersey on May 24, 1995, to participate in the various activities associated with this celebration. USS AMERICA intends to depart the Port of New York and New Jersey following the completion of Fleet Week on May 31, 1995. This regulation would be effective during the arrival and departure of the USS AMERICA on May 24, 1995, from 9:15 a.m. until 3 p.m., and on May 31, 1995, from 7:30 a.m. until 1 p.m. unless extended or terminated sooner by the Coast Guard Captain of the Port, New York. The regulation would establish a moving safety zone within 500 yards fore and aft and 200 yards to each side of the USS AMERICA, as it transits the Port of New York and New Jersey between Ambrose Channel Lighted Whistle Buoy ''A'', at or near 40°28.8′ N. latitude, 73°53.7′ W. longitude, and its berth. The exact berthing location is unknown at this time. It will be announced in the final rule and will broadcast via Marine Information Broadcast with the announcement of the effective date and time of the safety zone. No vessels will be permitted to enter or move within this moving safety zone unless authorized by the Captain of the Port, New York.

This regulation is needed to protect the maritime public from possible hazards to navigation associated with a large naval vessel transiting the Port of New York and New Jersey with limited maneuverability in restricted waters, and requiring a clear traffic lane in order to safely navigate to and from its berth.

Regulatory Evaluation

This proposal is not a significant regulatory action under section 3(f) of Executive Order 12866 and does not require an assessment of potential costs and benefits under section 6(a)(3) of that order. It has been exempted from the review by the Office of Management and Budget under that order. It is not significant under the regulatory policies and procedures of the Department of Transportation (DOT) (44 FR 11040; February 26, 1979). The Coast Guard expects the economic impact of this proposal to be so minimal that a full Regulatory Evaluation under paragraph 10(e) of the regulatory policies and procedures of DOT is unnecessary. This moving safety zone would prevent vessels from transiting portions of the

Port of New York and New Jersey on May 24, 1995, from 9:15 a.m. until 3 p.m., and on May 31, 1995, from 7:30 a.m. until 1 p.m., unless extended or terminated sooner by the Coast Guard Captain of the Port, New York. Although there is a regular flow of traffic through this area, there is not likely to be a significant impact on recreational or commercial traffic for several reasons. Due to the moving nature of the safety zone, no single location would be affected for a prolonged period of time. This safety zone prevents vessels from approaching within 500 yards fore and aft and 200 yards on either side of the aircraft carrier USS AMERICA. These distances are less than the typical safe passage distances normally required for large vessels and aircraft carriers. Additionally, recreational traffic can transit on either side of the safety zone on most major waterbodies and waterways within the Port. Alternate routes are also available to commercial and recreational vessels traffic that can safely transit the Harlem and East Rivers, Kill Van Kull, Arthur Kill, and Buttermilk Channel. Similar safety zones have been established for arrivals and departures of large naval vessels with minimal or no disruption to vessel traffic or other interests in the port. In addition extensive, advance advisories will be made to the maritime community so that they can adjust their plans accordingly. For all the above reasons, the Coast Guard expects the economic impact of this proposal to be so minimal that a Regulatory Evaluation is unnecessary.

Small Entities

Under the Regulatory Flexibility Act (5 U.S.C. 601 et seq.), the Coast Guard must consider whether this proposal will have a significant economic impact on a substantial number of small entities. ''Small entities'' include independently owned and operated small businesses that are not dominant in their field and that otherwise qualify as ''small business concerns'' under Section 3 of the Small Business Act (15 U.S.C. 632).

For reasons given in the Regulatory Evaluation, the Coast Guard expects the impact of this proposal to be minimal. The Coast Guard certifies under 5 U.S.C. 605(b) that this proposal will not have a significant economic impact on a substantial number of small entities.

Collection of Information

This proposal contains no collection of information requirements under the Paperwork Reduction Act (44 U.S.C. 3501).

Federalism

The Coast Guard has analyzed this action in accordance with the principles and criteria contained in Executive Order 12612 and has determined that this proposal does not raise sufficient federalism implications to warrant the preparation of a Federalism Assessment.

Environment

The Coast Guard has considered the environmental impact of this proposal and concluded that under section 2.B.2.e. of Commandant Instruction M16475.1B, it is categorically excluded from further environmental documentation. A Categorical Exclusion Determination is included in the docket.

List of Subjects in 33 CFR Part 165

Harbors, Marine safety, Navigation (water), Reporting and recordkeeping requirements, Security measures, Vessels, Waterways.

Proposed Regulations

For reasons set out in the preamble, the Coast Guard proposes to amend 33 CFR part 165 as follows:

PART 165—[AMENDED]

1. The authority citation for Part 165 continues to read as follows:

Authority: 33 U.S.C. 1231; 50 U.S.C. 191; 33 CFR 1.05–1(g), 6.04–1, 6.04–6, and 160.5; 49 CFR 1.46.

2. A temporary section, 165.T01–023 is added to read as follows:

§ 165.T01–023 USS AMERICA, Fleet Week '95, Port of New York and New Jersey.

(a) *Location.* This moving safety zone includes all waters within 500 yards fore and aft and 200 yards to each side of the USS AMERICA, as it transits the Port of New York and New Jersey between Ambrose Channel Lighted Whistle Buoy ''A'', at or near 40°28.8′ N latitude, 73°53.7′ W longitude, and its berth.

(b) *Effective period.* This section is effective on May 24, 1995, from 9:15 a.m. until 3 p.m., and on May 31, 1995, from 7:30 a.m. until 1 p.m., unless extended or terminated sooner by the Captain of the Port, New York.

(c) *Regulations.* (1) general regulations contained in 33 CFR 165.23 apply to this safety zone.

(2) All persons and vessels shall comply with the instructions of the Coast Guard Captain of the Port or the designated on scene patrol personnel. U.S. Coast Guard patrol personnel include commissioned, warrant, and petty officers of the Coast Guard. Upon being hailed by a U.S. Coast Guard vessel via siren, radio, flashing light, or other means, the operator of a vessel shall proceed as directed.

Dated: March 9, 1995.

T.H. Gilmour,

Captain, U.S. Coast Guard, Captain of the Port, New York.

[FR Doc. 95–6430 Filed 3–15–95; 8:45 am]

BILLING CODE 4910–14–M

---

33 CFR Part 165

[CGD01–95–004]

RIN 2115–AA97

Safety Zone: Annual South Street Seaport Memorial Day Fireworks, East River, NY

AGENCY: Coast Guard, DOT.

ACTION: Notice of proposed rulemaking.

SUMMARY: The Coast Guard proposes to establish a permanent safety zone for the annual South Street Seaport Memorial Day Fireworks display located in the East River, New York. The safety zone would be in effect annually on the Sunday before Memorial Day from 8 p.m. until 10 p.m., unless extended or terminated sooner by the Captain of the Port, New York. The proposed safety zone would close all waters of the East River south of the Brooklyn Bridge and north of a line drawn from Pier 9, Manhattan to Pier 3, Brooklyn.

DATES: Comments must be received on or before April 17, 1995.

ADDRESSES: Comments should be mailed to U.S. Coast Guard Group, New York, Bldg. 108, Governors Island, New York 10004–5096, or may be delivered to the Maritime Planning Staff, Bldg. 108, between 8 a.m. and 4 p.m., Monday through Friday, except Federal holidays.

Any person wishing to visit the office must contact the Maritime Planning Staff at (212) 668–7934 to obtain advance clearance due to the fact that Governors Island is a military installation with limited access.

FOR FURTHER INFORMATION CONTACT: Lieutenant (Junior Grade) K. Messenger, Maritime Planning Staff Chief, Coast Guard Group, New York, (212) 668–7934.

SUPPLEMENTARY INFORMATION:

Request for Comments

The Coast Guard encourages interested persons to participate in this rulemaking by submitting written data, views, or arguments. A 30 day comment period is deemed to be sufficiently reasonable notice to all interested persons. Since this proposed rulemaking is neither complex nor technical, a longer comment period is

deemed to be unnecessary and contrary to the public interest. Any delay in publishing a final rule would effectively cancel this event. Cancellation of this event would be contrary to public interest.

Persons submitting comments should include their names and addresses, identify this notice (CGD01–95–004) and the specific section of the proposal to which their comments apply, and give reasons for each comment. Persons wanting acknowledgment of receipt of comments should enclose a stamped, self-addressed postcard or envelope.

The Coast Guard will consider all comments received during the comment period. It may change this proposal in view of the comments. The Coast Guard plans no public hearing; however, persons may request a public hearing by writing to the Maritime Planning Staff at the address under **ADDRESSES**. If it is determined that the opportunity for oral presentations will aid this rulemaking, the Coast Guard will hold a public hearing at a time and place announced by a later notice in the **Federal Register**.

Drafting Information

The drafters of this notice are LTJG K. Messenger, Project Manager, Captain of the Port, New York and LCDR J. Stieb, Project Attorney, First Coast Guard District, Legal Office.

Background and Purpose

For the last several years, South Street Seaport, Inc. has submitted an Application for Approval of Marine Event for a Memorial Day fireworks program in the waters of the East River. This regulation would establish a safety zone in the waters of the East River on the Sunday before Memorial Day from 8 p.m. until 10 p.m., unless extended or terminated sooner by the Captain of the Port New York. This safety zone would preclude all vessels from transiting south of the Brooklyn Bridge and north of a line drawn from Pier 9, Manhattan to Pier 3, Brooklyn. It is needed to protect mariners from the hazards associated with fireworks exploding in the area.

This permanent regulation would provide notice to mariners that this event occurs annually at the same location, on the same day and time, allowing them to plan transits accordingly. This regulation will be announced annually via Safety Marine Information Broadcasts and by locally issued notices.

Regulatory Evaluation

This proposal is not a significant regulatory action under section 3(f) of Executive Order 12866 and does not require an assessment of potential costs and benefits under section 6(a)(3) of that order. It has been exempted from review by the Office of Management and Budget under that order. It is not significant under the regulatory policies and procedures of the Department of Transportation (DOT) (44 FR 11040; February 26, 1979). The Coast Guard expects the economic impact of this proposal to be so minimal that a full Regulatory Evaluation under paragraph 10(e) of the regulatory policies and procedures of DOT is unnecessary. This safety zone would close a portion of the East River to all vessel traffic annually on the Sunday before Memorial Day between 8 p.m. and 10 p.m., unless extended or terminated sooner by the Captain of the Port New York. Although this regulation would prevent traffic from transiting this area, the effect of this regulation would not be significant for several reasons. Due to the limited duration of the event; the late hour of the event; the extensive, advance advisories that will be made; that pleasure craft and some commercial vessels can take an alternate route via the Hudson and Harlem Rivers; and that this event has been held annually for the past several years without incident or complaint, the Coast Guard expects the economic impact of this regulation to be so minimal that a Regulatory Evaluation is unnecessary.

Small Entities

Under the Regulatory Flexibility Act (5 U.S.C. 601 et seq.), the Coast Guard must consider whether this proposal will have a significant economic impact on a substantial number of small entities. ''Small entities'' include independently owned and operated small businesses that are not dominant in their field and that other wise qualify as ''small business concerns'' under Section 3 of the Small Business Act (15 U.S.C. 632).

For reasons set forth in the above Regulatory Evaluation, the Coast Guard expects the impact of this proposal to be minimal. The Coast Guard certifius under 5 U.S.C. 605(b) that this proposal will not have a significant economic impact on a substantial number of small entities.

Collection of Information

This proposal contains no collection of information requirements under the Paperwork Reduction Act (44 U.S.C. 3501).

Federalism

The Coast Guard has analyzed this action in accordance with the principles and criteria contained in Executive Order 12612 and has determined that this proposal does not raise sufficient federalism implications to warrant the preparation of a Federalism Assessment.

Environment

The Coast Guard has considered the environmental impact of this proposal and concluded that under section 2.B.2.e. of Commandant Instruction M16475.1B, it is categorically excluded from further environmental documentation. A Categorical Exclusion Determination is included in the docket.

List of Subjects in 33 CFR Part 165

Harbors, Marine safety, Navigation (water), Reporting and recordkeeping requirements, Security measures, Waterways.

Proposed Regulations

For reasons set out in the preamble, the Coast Guard proposes to amend 33 CFR Part 165 as follows:

PART 165—[AMENDED]

1. The authority citation for Part 165 continues to read as follows:

Authority: 33 U.S.C. 1231; 50 U.S.C. 191; 33 CFR 1.05–1(g), 6.04–1, 6.04–6, and 160.5; 49 CFR 1.46.

2. Section 165.175, is added to read as follows:

§ 165.175 Safety Zone; Annual South Street Seaport Memorial Day Fireworks Display, East River, New York.

(a) *Location*. The safety zone includes all waters of the East River south of the Brooklyn Bridge and north of a line drawn from Pier 9, Manhattan to Pier 3, Brooklyn.

(b) *Effective period*. This section is in effect annually on the Sunday before Memorial Day from 8 p.m. until 10 p.m., unless extended or terminated sooner by the Captain of the Port New York. The effective period will be announced annually via Safety Marine Information Broadcasts and locally issued notices.

(c) *Regulations*. (1) The general regulations contained in 33 CFR 165.23 apply.

(2) All persons and vessels shall comply with the instructions of the Coast Guard Captain of the Port or the designated on scene patrol personnel. U.S. Coast Guard patrol personnel include commissioned, warrant, and petty officers of the Coast Guard. Upon being hailed by a U.S. Coast Guard vessel via siren, radio, flashing light, or other means, the operator of a vessel shall proceed as directed.

Dated: March 6, 1995.

T.H. Gilmour,

Captain, U.S. Coast Guard, Captain of the Port, New York.

[FR Doc. 95–6429 Filed 3–15–95; 8:45 am]

BILLING CODE 4910–14–M

---

33 CFR Part 165

[CGD01–95–013]

RIN 2115–AA97

Safety Zone: Annual North Hempstead Memorial Day Fireworks Display, Hempstead Harbor, NY

AGENCY: Coast Guard, DOT.

ACTION: Notice of proposed rulemaking.

SUMMARY: The Coast Guard proposes to establish a permanent safety zone for the annual North Hempstead Memorial Day fireworks display located in Hempstead Harbor, New York. The safety zone would be in effect annually on the Friday before Memorial Day from 8 p.m. until 10 p.m., with a rain date on the following Saturday during the same times, unless extended or terminated sooner by the Captain of the Port, New York. The proposed safety zone could close all waters of Hempstead Harbor within a 300 yard radius from the center of the fireworks platform located approximately 300 yards north of Bar Beach, North Hempstead, New York.

DATES: Comments must be received on or before April 17, 1995.

ADDRESSES: Comments should be mailed to U.S. Coast Guard Group, New York, Bldg. 108, Governors Island, New York 10004–5096, or may be delivered to the Maritime Planning Staff, Bldg. 108, between 8 a.m. and 4 p.m., Monday through Friday, except Federal holidays.

Any person wishing to visit the office must contact the Maritime Planning Staff at (212) 668–7934 to obtain advance clearance due to the face that Governors Island is a military installation with limited access.

FOR FURTHER INFORMATION CONTACT: Lieutenant (Junior Grade) K. Messenger, Maritime Planning Staff Chief, Coast Guard Group New York (212) 668–7934.

SUPPLEMENTARY INFORMATION:

Request for Comments

The Coast Guard encourages interested persons to participate in this rulemaking by submitting written data, views, or arguments. A 30 day comment period is deemed to be sufficiently reasonable notice to all interested persons. Since this proposed rulemaking is neither complex nor technical, a longer comment period is deemed to be unnecessary and contrary to the public interest. Any delay in publishing a final rule would effectively cancel this event. Cancellation of this event would be contrary to public interest.

Persons submitting comments should include their names and addresses, identify this notice (CGD01–95–013) and the specific section of the proposal to which their comments apply, and give reasons for each comment. Persons wanting acknowledgment of receipt of comments should enclose a stamped, self-addressed postcard or envelope.

The Coast Guard will consider all comments received during the comment period. It may change this proposal in view of the comments. The Coast Guard plans no public hearing; however, persons may request a public hearing by writing to the Maritime Planning Staff at the address under **ADDRESSES**. If it is determined that the opportunity for oral presentations will aid their rulemaking, the Coast Guard will hold a public hearing at a time and place announced by a later notice in the **Federal Register**.

Drafting Information

The drafters of this notice are LTJG K. Messenger, Project Manager, Captain of the Port, New York and LCDR J. Stieb, Project Attorney, First Coast Guard District, Legal Office.

Background and Purpose

For the last several years, the Town of North Hempstead has submitted an Application of Approval of Marine Event for a fireworks program in the waters of Hempstead Harbor. This regulation would establish an annual safety zone in the waters of Hempstead Harbor on the Friday before Memorial Day from 8 p.m. until 10 p.m., with a rain date on the following Saturday during the same times, unless extended or terminated sooner by the Captain of the Port New York. This safety zone would preclude all vessels from transiting within a 300 yard radius of the fireworks platform located approximately 300 yards north of Bar Beach, North Hempstead, New York. It is needed to protect mariners from the hazards associated with fireworks exploding in the area.

This permanent regulation would provide notice to mariners that this event occurs annually at the same location, on the same day and time, allowing them to plan transits accordingly. This regulation will be announced annually via Safety Marine Information Broadcasts and by locally issued notices.

Regulatory Evaluation

This proposal is not a significant regulatory action under section 3(f) of Executive Order 12866 and does not require an assessment of potential costs and benefits under section 6(a)(3) of that order. It has been exempted from review by the Office of Management and Budget under that order. It is not significant under the regulatory policies and procedures of the Department of Transportation (DOT) (44 FR 11040; February 26, 1979). The Coast Guard expects the economic impact of this proposal to be so minimal that a full Regulatory Evaluation under paragraph 10(e) of the regulatory policies and procedures of DOT is unnecessary. This safety zone would close a portion of Hempstead Harbor to all vessel traffic annually on the Friday before Memorial Day from 8 p.m. until 10 p.m., with a rain date on the following Saturday at the same times, unless extended or terminated sooner by the Captain of the Port New York. Although this regulation would prevent traffic from transiting this area, the effect of this regulation would not be significant for several reasons. Due to the limited duration of the event; the late hour of the event; the extensive, advance advisories that will be made; that the amount of traffic in this area is minimal; and that this event has been held annually for the past several years without incident or complaint, the Coast Guard expects the economic impact of this regulation to be so minimal that a Regulatory Evaluation is unnecessary.

Small Entities

Under the Regulatory Flexibility Act (5 U.S.C. 601 et seq.), the Coast Guard must consider whether this proposal will have a significant economic impact on a substantial number of small entities. ''Small entities'' include independently owned and operated small businesses that are not dominant in their field and that otherwise qualify as ''small business concerns'' under Section 3 of the Small Business Act (15 U.S.C. 632).

For reasons set forth in the above Regulatory Evaluation, the Coast Guard expects the impact of this proposal to be minimal. The Coast Guard certifies under 5 U.S.C. 605(b) that this proposal will not have a significant economic impact on a substantial number of small entities.

Collection of Information

This proposal contains no collection of information requirements under the Paperwork Reduction Act (44 U.S.C. 3501).

Federalism

The Coast Guard has analyzed this action in accordance with the principles and criteria contained in Executive Order 12612 and has determined that this proposal does not raise sufficient federalism implications to warrant the preparation of a Federalism Assessment.

Environment

The Coast Guard has considered the environmental impact of this proposal and concluded that under section 2.B.2.e. of Commandant Instruction M16475.1B; it is categorically excluded from further environmental documentation. A Categorical Exclusion Determination is included in the docket.

List of Subjects in 33 CFR Part 165

Harbors, Marine safety, Navigation (water), Reporting and recordkeeping requirements, Security measures, Waterways.

Proposed Regulations

For reasons set out in the preamble, the Coast Guard proposes to amend 33 CFR Part 165 as follows:

PART 165—[AMENDED]

1. The authority citation for Part 165 continues to read as follows:

Authority: 33 U.S.C. 1231; 50 U.S.C. 191; 33 CFR 1.05–1(g), 6.04–1, 6.04–6, and 160.5; 49 CFR 1.46.

2. Section 165.178, is added to read as follows:

§ 165.178 Safety Zone; Annual North Hempstead Memorial Day Fireworks Display, Hempstead Harbor, New York.

(a) *Location.* All waters of Hempstead Harbor within a 300 yard radius from the center of a fireworks platform located approximately 300 yards north of Bar Beach, North Hempstead, New York.

(b) *Effective period.* This section is in effect annually on the Friday before Memorial Day from 8 p.m. until 10 p.m., unless extended or terminated sooner by the Captain of the Port New York. If the fireworks is cancelled because of bad weather, this section is in effect on the following Saturday at the same time unless extended or terminated sooner by the Captain of the Port New York. The effective period will be announced annually via Safety Marine Information Broadcasts and locally issued notices.

(c) *Regulations.*

(1) The general regulations contained in 33 CFR 165.23 apply.

(2) All persons and vessels shall comply with the instructions of the Coast Guard Captain of the Port or the designated on scene patrol personnel. U.S. Coast Guard patrol personnel include commissioned, warrant, and petty officers of the Coast Guard. Upon being hailed by a U.S. Coast Guard vessel via siren, radio, flashing light, or other means, the operator of a vessel shall proceed as directed.

Dated: March 5, 1995.

T.H. Gilmour,

Captain, U.S. Coast Guard, Captain of the Port, New York.

[FR Doc. 95–6431 Filed 3–15–95; 8:45 am]

BILLING CODE 4910–14–M

---

33 CFR Part 165

[CGD01–95–014]

RIN 2115–AA97

Safety Zone: Parade of Ships, Fleet Week '95, Port of New York and New Jersey

AGENCY: Coast Guard, DOT.

ACTION: Notice of proposed rulemaking.

SUMMARY: The Coast Guard proposes to establish a temporary safety zone on May 24, 1995, for the Fleet Week '95 Parade of Ships. This moving safety zone would be established 500 yards fore and aft, and 200 yards on each side of the designated column of vessels in this parade as it transits from the Verrazano Narrows Bridge to the waters west of the 79th Street Boat Basin, Manhattan, in the Hudson River. As the vessels make their turns and proceed southbound in the Hudson River the moving safety zone will continue to encompass all waters within a 200 yard radius of each vessel until it is safely berthed. The regulation would be in effect from 8:45 a.m. until 3 p.m. on Wednesday, May 24, 1995, unless extended or terminated sooner by the Coast Guard Captain of the Port, New York.

DATES: Comments must be received on or before April 17, 1995.

ADDRESSES: Comments should be mailed to U.S. Coast Guard Group, New York, Bldg. 108, Governors Island, New York 1004–5096, or may be delivered to the Maritime Planning Staff, Bldg. 108, between 8:45 a.m. and 4 p.m., Monday through Friday, except Federal holidays. Any person wishing to visit the office must contact the Maritime Planning Staff at (212) 668–7934 to obtain advance clearance, due to the fact that Governors Island is military installation with limited access.

FOR FURTHER INFORMATION CONTACT: Lieutenant (Junior Grade) K. Messenger, Maritime Planning Staff Chief, Coast Guard Group, New York, (212) 668–7934.

SUPPLEMENTARY INFORMATION: .

Request for Comments

The Coast Guard encourages interested persons to participate in this rulemaking by submitting written data, views, or arguments. A 30 day comment period is deemed to be sufficiently reasonable notice to all interested persons. Since this proposed rulemaking is neither complex nor technical, a longer comment period is unnecessary and contrary to the public interest. Any delay in publishing a final rule would effectively cancel this event.

Persons submitting comments should include their names and addresses, identify this notice (CGD01–95–014) and the specific section of the proposal to which their comments apply, and give reasons for each comment. Persons wanting acknowledgment of receipt of comments should enclose a stamped, self-addressed postcard or envelope.

The Coast Guard will consider all comments received during the comment period. It may change this proposal in view of the comments. The Coast Guard plans no public hearing, however, persons may request a public hearing by writing to the Project Manager at the address under **ADDRESSES**. If it is determined that the opportunity for oral presentations will aid this rulemaking, the Coast Guard will hold a public hearing at a time and place announced by a later notice in the **Federal Register**.

Drafting Information

The drafters of this notice are LTJG K. Messenger, Project Manager, Coast Guard Group New York and LCDR J. Stieb, Project Attorney, First Coast District, Legal Office.

Background and Purpose

On March 1, 1995 the Intrepid Museum Foundation submitted a request to hold a parade of U.S. Coast Guard and U.S. and foreign naval ships through the Port of New York and New Jersey on May 24, 1995. The regulation would be effective from 8:45 a.m. until 3 p.m. on May 24, 1995, unless extended or terminated sooner by the Coast Guard Captain of the Port, New York. This regulation would establish a moving safety zone within all waters 500 yards forward of the lead parade vessel, 500 yards aft of the last parade vessel, and 200 yards to each side of the designated column as it transits north from the Verrazano Narrows Bridge to the waters west of the 79th Street Boat Basin, Manhattan, in the Hudson River. The vessels would then proceed to their berths. The regulation would also provide for a moving safety zone in all waters within a 200 yard radius around

each vessel from the time the vessel breaks off from the parade until it is safely moored. No vessel will be permitted to enter or move within these safety zones unless authorized by the Captain of the Port, New York.

This regulation is needed to protect the maritime public from possible hazards to navigation associated with a parade of naval vessels transiting the waters of New York Harbor in close proximity. These vessels have limited maneuverability and require a clear traffic lane in order to safely navigate.

Regulatory Evaluation

This proposal is not a significant regulatory action under section 3(f) of Executive Order 12866 and does not require an assessment of potential costs and benefits under section 6(a)(3) of that order. It has been exempted from review by the Office of Management and Budget under that order. It is not significant under the regulatory policies and procedures of the Department of Transportation (DOT) (44 FR 11040; February 26, 1979). The Coast Guard expects the economic impact of this proposal to be so minimal that a full Regulatory Evaluation under paragraph 10(e) of the regulatory policies and procedures of DOT is unnecessary.

This moving safety zone would prevent vessels from transiting portions of the Port of New York and New Jersey from 8:45 a.m. until 3 p.m. on Wednesday, May 24, 1995, unless extended or terminated sooner by the Coast Guard Captain of the Port, New York. Although there is a regular flow of traffic through this area, there is not likely to be a significant impact on recreational or commercial traffic for several reasons. Due to the moving nature of the safety zone, no single location would be affected for a prolonged period of time which in turn should not significantly delay commercial traffic. Additionally, recreational traffic can transit the river on either side of the safety zone. Alternate routes are also available to commercial and recreational vessels traffic that can safely transit the Harlem and East Rivers, Kill Van Kull, Arthur Kill, and Buttermilk Channel. Similar safety zones have been established for the last few Fleet Week parades of ships with minimal or no disruption to vessel traffic or other interests in the port. In addition extensive, advance advisories will be made to the maritime community so that they can adjust their plans accordingly. For all the above reasons, the Coast Guard expects the economic impact of this proposal to be so minimal that a Regulatory Evaluation is unnecessary.

Small Entities

Under the Regulatory Flexibility Act (5 U.S.C. 601 et seq.), the Coast Guard must consider whether this proposal will have a significant economic impact on a substantial number of small entities. ''Small entities'' include independently owned and operated small businesses that are not dominant in their field and that otherwise qualify as ''small business concerns'' under Section 3 of the Small Business Act (15 U.S.C. 632).

For reasons given in the Regulatory Evaluation, the Coast Guard expects the impact of this proposal to be minimal. The Coast Guard certifies under 5 U.S.C. 605(b) that this proposal will not have a significant economic impact on a substantial number of small entities.

Collection of Information

This proposal contains no collection of information requirements under the Paperwork Reduction Act (44 U.S.C. 3501).

Federalism

The Coast Guard has analyzed this action in accordance with the principles and criteria contained in Executive Order 12612 and has determined that this proposal does not raise sufficient federalisms implications to warrant the preparation of a Federalism Assessment.

Environment

The Coast Guard has considered the environmental impact of this proposal and concluded that under section 2.B.2.e. of Commandant Instruction M16475.1B, it is categorically excluded from further environmental documentation. A Categorical Exclusion Determination is included in the docket.

List of Subjects in 33 CFR Part 165

Harbors, Marine safety, Navigation (water), Reporting and recordkeeping requirements, Security measures, Vessels, Waterways.

Proposed Regulations

For reasons set out in the preamble, the Coast Guard proposes to amend 33 CFR part 165 as follows:

PART 165—[AMENDED]

1. The authority citation for Part 165 continues to read as follows:

Authority: 33 U.S.C. 1231; 50 U.S.C. 191; 33 CFR 1.05–1(g), 6.04–1, 6.04–6, and 160.5; 49 CFR 1.46.

2. A temporary section, 165.T01–014 is added to read as follows:

§ 165.T01–041 Parade of Ships, Fleet Week '95, Port of New York and New Jersey.

(a) *Location* This moving safety zone includes all waters within 500 yards forward of the lead parade vessel, 500 yards aft of the last parade vessel, and 200 yards on each side of the designated column as it transits north from the Verrazano Narrows Bridge to the waters west of the 79th Street Boat Basin, Manhattan, in the Hudson River. The moving safety zone continues to include 200 yards around each vessel as it breaks from the parade formation and transits southbound in the Hudson River until safety berthed.

(b) *Effective period* This section is effective from 8:45 a.m. until 3 p.m. on May 24, 1995, unless extended or terminated sooner by the Captain of the Port, New York.

(c) *Regulations.*

(1) The general regulations contained in 33 C.F.R. 165.23 apply to this safety zone.

(2) All persons and vessels shall comply with the instructions on of the Coast Guard Captain of the Port or the designated on scene patrol personnel. U.S. Coast Guard patrol personnel include commissioned, warrant, and petty officers of the Coast Guard. Upon being hailed by a U.S. Coast Guard vessel via siren, radio, flashing light, or other means, the operator of a vessel shall proceed as directed.

Dated: March 9, 1995.

T.H. Gilmour,

Captain, U.S. Coast Guard, Captain of the Port, New York.

[FR Doc. 95–6432 Filed 3–15–95; 8:45 am]

BILLING CODE 4910–14–M

National Highway Traffic Safety Administration

49 CFR Parts 564 and 571

[Docket No. 85–15; Notice 16]

RIN 2127–AF62

Replaceable Light Source Information Federal Motor Vehicle Safety Standards; Lamps, Reflective Devices and Associated Equipment

AGENCY: National Highway Traffic Safety Administration (NHTSA), DOT.

ACTION: Notice of proposed rulemaking.

SUMMARY: This notice proposes amendments to the Federal motor vehicle standard on lighting to facilitate the transfer by NHTSA of all dimensional and specification information on HB Type replaceable light sources for headlamps to Docket No. 93–11. This docket has been

established as the information docket specified in part 564 for replaceable light source information. This regulatory action is intended to simplify Standard No. 108 while ensuring consistent regulatory treatment of all headlamp replaceable light sources. The notice also proposes conforming amendments to part 564.

DATES: The due date for comments is May 15, 1995. The amendments would be effective 30 days after publication of the final rule in the **Federal Register**.

ADDRESSES: Comments should refer to the docket number and notice number, and be submitted to: Docket Section, room 5109, 400 Seventh Street, SW, Washington, DC 20590. (Docket hours are from 9:30 a.m. to 4 p.m.)

FOR FURTHER INFORMATION CONTACT: Kenneth O. Hardie, Office of Rulemaking, NHTSA (202–366–6987).

SUPPLEMENTARY INFORMATION: For many years, Motor Vehicle Safety Standard No. 108 allowed headlamps only of sealed beam construction and ones whose design dimensions were rigidly specified in the standard. In 1983, Standard No. 108 was amended to permit headlamps of non-sealed construction, equipped with a replaceable light source. With this amendment, the dimensions of the headlamp were no longer subject to Federal specification. Instead, to ensure repeatability of performance and ease of replaceability in the aftermarket, NHTSA adopted standardized dimensional restrictions for the light source itself. Each light source was given a distinctive HB Type designation. Today, Standard No. 108 incorporates five different types of replaceable light sources known as Types HB1 through HB5.

Each one of these light sources has been added to Standard No. 108 through rulemaking procedures that conform to the Administrative Procedure Act, that is to say, after an opportunity has been provided for notice and comment. This process is time consuming and has not afforded flexibility to NHTSA in accommodating manufacturers who wish to introduce new light sources in a more timely and predictable manner. In the late 1980's, NHTSA decided that the regulatory process might be made less cumbersome by establishing a docket in which manufacturers of new replaceable light sources could submit appropriate dimensional and other information which would require nothing more than acceptance by NHTSA before the new light sources could be used in headlamps (subject to the requirements, of course, that headlamps incorporating the new light sources meet the performance requirements of Standard No. 108, and that the light sources conform to the information listed for them).

Pursuant to this decision and with appropriate notices published in the **Federal Register**, on January 12, 1993, NHTSA established part 564 *Replaceable Light Source Information* (58 FR 3856). At that time, rulemaking was in progress to add a Type HB6 to Standard No. 108. However, with the advent of part 564, NHTSA decided to terminate rulemaking to adopt a Type HB6 on March 10, 1993, and to file the relevant information under part 564 (58 FR 13243). On March 19, 1993, the information docket was designated Docket No. 93–11 (58 FR 15132). Concurrently with this notice, NHTSA is responding to petitions for reconsideration of the January 12, 1993, final rule and amending part 564 to broaden the category of manufacturers who are permitted to submit light source information, as well as establishing a procedure to implement changes to information previously filed. The text that is proposed below for paragraphs 564.5(a) and (c) is based upon these amendments.

With the advent of part 564, there exist two places for dimensional and specification information on replaceableheadlamp bulbs, paragraph S7.7 of Standard No. 108 and Docket No. 93–11. Because headlamps with any type of replaceable light sources, HB or other, must meet the same (or equivalent in the case of photometrics) performance requirements, there appears to be no safety disbenefit in removing the Figures in Standard No. 108 that specify dimensions for Type HB light sources and placing that information in Docket No. 93–11. Such an action would also entail minor amendments of a housekeeping nature to dovetail HB Type light sources and those that are permitted pursuant to part 564.

This notice proposes to remove from Standard No. 108 those Figures and text that specify dimensional, performance, and electrical specifications for HB Types 1 through 5. Upon issuance of a final rule, NHTSA would place this information in Docket No. 93–11. The notice would also redefine ''replaceable light source'' to mean an assembly of a capsule, base, and terminals that is designed to conform to the dimensions, specifications, and marking furnished with respect to it pursuant to Appendix A of part 564. The section on replaceable light sources, S7.7, would be revised by removing paragraphs (a) through (e) which refer to the Figures that would be deleted, and paragraph (f) which relates to marking; this would be incorporated into paragraph (h), which would be redesignated paragraph (a). Present paragraph (g) would be transferred to the introductory text of S7.7, and paragraphs (h) through (k) would be redesignated (a) through (d) with minor changes in text. A conforming amendment would be made to S9.

In addition, a conforming amendment would be made to part 564 to remove the present exclusion of replaceable light sources specified in S7.7 of Standard No. 108.

Request for Comments

Interested persons are invited to submit comments on the proposal. It is requested but not required that 10 copies be submitted.

All comments must not exceed 15 pages in length. (49 CFR 553.21). Necessary attachments may be appended to these submissions without regard to the 15-page limit. This limitation is intended to encourage commenters to detail their primary arguments in a concise fashion.

If a commenter wishes to submit certain information under a claim of confidentiality, three copies of the complete submission, including purportedly confidential business information, should be submitted to the Chief Counsel, NHTSA, at the street address given above, and seven copies from which the purportedly confidential information has been deleted should be submitted to the Docket Section. A request for confidentiality should be accompanied by a cover letter setting forth the information specified in the agency's confidential business information regulation. 49 CFR Part 512.

All comments received before the close of business on the comment closing date indicated above for the proposal will be considered, and will be available for examination in the docket at the above address both before and after that date. To the extent possible, comments filed after the closing date will also be considered. Comments received too late for consideration in regard to the final rule will be considered as suggestions for further rulemaking action. Comments on the proposal will be available for inspection in the docket. The NHTSA will continue to file relevant information as it becomes available in the docket after the closing date, and it is recommended that interested persons continue to examine the docket for new material.

Those persons desiring to be notified upon receipt of their comments in the rules docket should enclose a self-addressed, stamped postcard in the

envelope with their comments. Upon receiving the comments, the docket supervisor will return the postcard by mail.

Effective Date

The effective date of the final rule would be April 17, 1995. Because the final rule establishes no additional burden on any party and is primarily of an administrative nature, it is hereby tentatively found for good cause shown that an effective date for the amendments to Standard No. 108 that is earlier than 180 days after their issuance would be in the public interest.

Rulemaking Analyses and Notices

Executive Order 12866 and DOT Regulatory Policies and Procedures. The Office of Management and Budget has determined that it will not review this rulemaking action under Executive Order 12866. It has been determined that the rulemaking action is not significant under Department of Transportation regulatory policies and procedures. The purpose of the rulemaking action is an administrative one, to remove regulatory material from Standard No. 108 which the agency will file in a regulatory docket on the subject. Since the rule does not have any significant cost or other impacts, preparation of a full regulatory evaluation is not warranted.

National Environmental Policy Act. NHTSA has analyzed this rulemaking action for the purposes of the National Environmental Policy Act. It is not anticipated that a final rule based on this proposal would have a significant effect upon the environment. The design and composition of headlamps or light sources would not change from those presently in production.

Regulatory Flexibility Act. The agency has also considered the impacts of this rulemaking action in relation to the Regulatory Flexibility Act. I certify that this rulemaking action would not have a significant economic impact upon a substantial number of small entities. Accordingly, no regulatory flexibility analysis has been prepared. Manufacturers of motor vehicles, headlamps, and light sources, those affected by the rulemaking action, are generally not small businesses within the meaning of the Regulatory Flexibility Act. Further, small organizations and governmental jurisdictions would not be significantly affected because the price of new vehicles, headlamps, and light sources would not be impacted.

Executive Order 12612 (Federalism). This rulemaking action has also been analyzed in accordance with the principles and criteria contained in Executive Order 12612, and NHTSA has determined that this rulemaking action does not have sufficient federalism implications to warrant the preparation of a Federalism Assessment.

Civil Justice (Executive Order 12778). A final rule based on this proposal would not have any retroactive effect. Under 49 U.S.C. 30103, whenever a Federal motor vehicle safety standard is in effect, a state may not adopt or maintain a safety standard applicable to the same aspect of performance which is not identical to the Federal standard. Section 30161 of Title 49 sets forth a procedure for judicial review of final rules establishing, amending or revoking Federal motor vehicle safety standards. That section does not require submission of a petition for reconsideration or other administrative proceedings before parties may file suit in court.

List of Subjects

49 CFR Part 564

Motor vehicle safety, Motor vehicles.

49 CFR Part 571

Imports, Motor vehicle safety, Motor vehicles.

In consideration of the foregoing, 49 CFR parts 564 and 571 would be amended as follows:

PART 564—REPLACEABLE LIGHT SOURCE INFORMATION

1. The authority citation for part 564 would remain as follows:

Authority: 49 U.S.C. 322, 30111, 30115, 30117, 30166; delegation of authority at 49 CFR 1.50.

2. Part 564 would be amended by revising paragraphs 564.5(a) and (c) to read as follows:

§ 564.5 Information filing requirements; agency processing of filings.

(a) Each manufacturer of a motor vehicle, original equipment headlamp, or original equipment headlamp replaceable light source, which intends to manufacture a replaceable light source as original equipment or to incorporate a replaceable light source in its headlamps or motor vehicles, shall furnish the information specified in Appendix A of this part to: Associate Administrator for Rulemaking, National Highway Traffic Safety Administration, 400 Seventh Street SW, Washington, D.C. 20590. Attn: *Replaceable Light Source Information* Docket No. 93–11, (unless the agency has already filed such information in Docket No. 93–11).

* * * * *

(c) The Associate Administrator promptly reviews each submission and informs the manufacturer not later than 30 days after its receipt whether the submission has been accepted. The Associate Administrator does not accept any submission that does not contain all the information specified in Appendix A of this part, or whose accompanying information indicates that any new light source which is the subject of a submission is interchangeable with any replaceable light source for which the agency has previously filed information in Docket No. 93–11.

* * * * *

PART 571—FEDERAL MOTOR VEHICLE SAFETY STANDARDS

3. The authority citation for Part 571 would be revised to read as follows:

Authority: 49 U.S.C. 322, 30111, 30115, 30177, 30166; delegation of authority at 49 CFR 1.50.

§ 571.108 [Amended]

4. Section 571.108 would be amended by:

a. revising the definition of ''Replaceable Light Source'' in section S4 to read as set forth below;

b. revising paragraph S7.7 to read as set forth below;

c. revising the last sentence of S9 as set forth below; and

d. removing and reserving Figures 3–1 through 3–11, 19, 19–1 through 19–5, 20, 20–1 through 20–5, 23–1 through 23–7, and 24–1 through 24–9.

e. revising Figures 8 and 25 as set forth below.

§ 571.108 Motor Vehicle Safety Standard No. 108 Lamps, Reflective Devices, and Associated Equipment.

* * * * *

S4 *Definitions*

* * * * *

Replaceable light source means an assembly of a capsule, base and terminals designed to conform to the dimensions, specifications and markings furnished with respect to it pursuant to Appendix A of part 564 *Replaceable Light Source Information* of this chapter.

* * * * *

S7.7 *Replaceable Light Sources.* Each replaceable light source shall be designed to conform to the dimensions and electrical specifications furnished with respect to it pursuant to part 564 of this chapter, and shall conform to the following requirements:

(a) If other than an HB Type, the light source shall be marked with the bulb marking designation specified for it in compliance with section VIII of

Appendix A of part 564 of this chapter. The base of each HB Type shall be marked with its HB Type designation. Each replaceable light source shall also be marked with the symbol DOT and with a name or trademark in accordance with paragraph S7.2.

(b) The measurement of maximum power and luminous flux that is submitted in compliance with section VII of Appendix A of part 564 of this chapter shall be made in accordance with this paragraph. The filament shall be seasoned before measurement of either. Measurement shall be made with the direct current test voltage regulated within one quarter of one percent. The test voltage shall be design voltage, 12.8v. The measurement of luminous flux shall be in accordance with the Illuminating Engineering Society of North America, LM–45; *IES Approved Method for Electrical and Photometric Measurements of General Service Incandescent Filament Lamps* (April 1980), shall be made with the black cap installed on Type HB1, Type HB2, Type HB4, and Type HB5, and on any other replaceable light source so designed, and shall be made with the electrical conductor and light source base shrouded with an opaque white colored cover, except for the portion normally located within the interior of the lamp housing. The measurement of luminous flux for the Types HB3 and HB4 shall be made with the base covered. (The white cover is used to eliminate the likelihood of incorrect lumen measurement that will occur should the reflectance of the light source base and electrical connector be low).

(c) The capsule, lead wires and/or terminals, and seal on each Type HB1, Type HB3, Type HB4, and Type HB5 light source, and on any other replaceable light source which uses a seal, shall be installed in a pressure chamber as shown in Figure 25 so as to provide an airtight seal. The diameter of the aperture in Figure 25 on a replaceable light source (other than an HB Type) shall be that figure furnished for such light source in compliance with Section IV.B of Appendix A of part 564 of this chapter. An airtight seal exists when no air bubbles appear on the low pressure (connector) side after the light source has been immersed in water for one minute while inserted in a cylindrical aperture specified for the light source, and subjected to an air pressure of 70kPa (10 P.S.I.G.) on the glass capsule side.

(d) After the force deflection test conducted in accordance with S9, the permanent deflection of the glass envelope shall not exceed 0.13 mm in the direction of the applied force.

* * * * *

S9 *Deflection test for replaceable light sources.* * * * Distance 'A' for a replaceable light source other than an HB Type shall be the dimension provided in accordance with Appendix A of part 564 of this chapter, section I.A.1 if the light source has a lower beam filament, or as specified in section I.B.1 if the light source has only an upper beam filament.

* * * * *

BILLING CODE 4910–59–P

FIGURE 8 - BULB DEFLECTION TEST

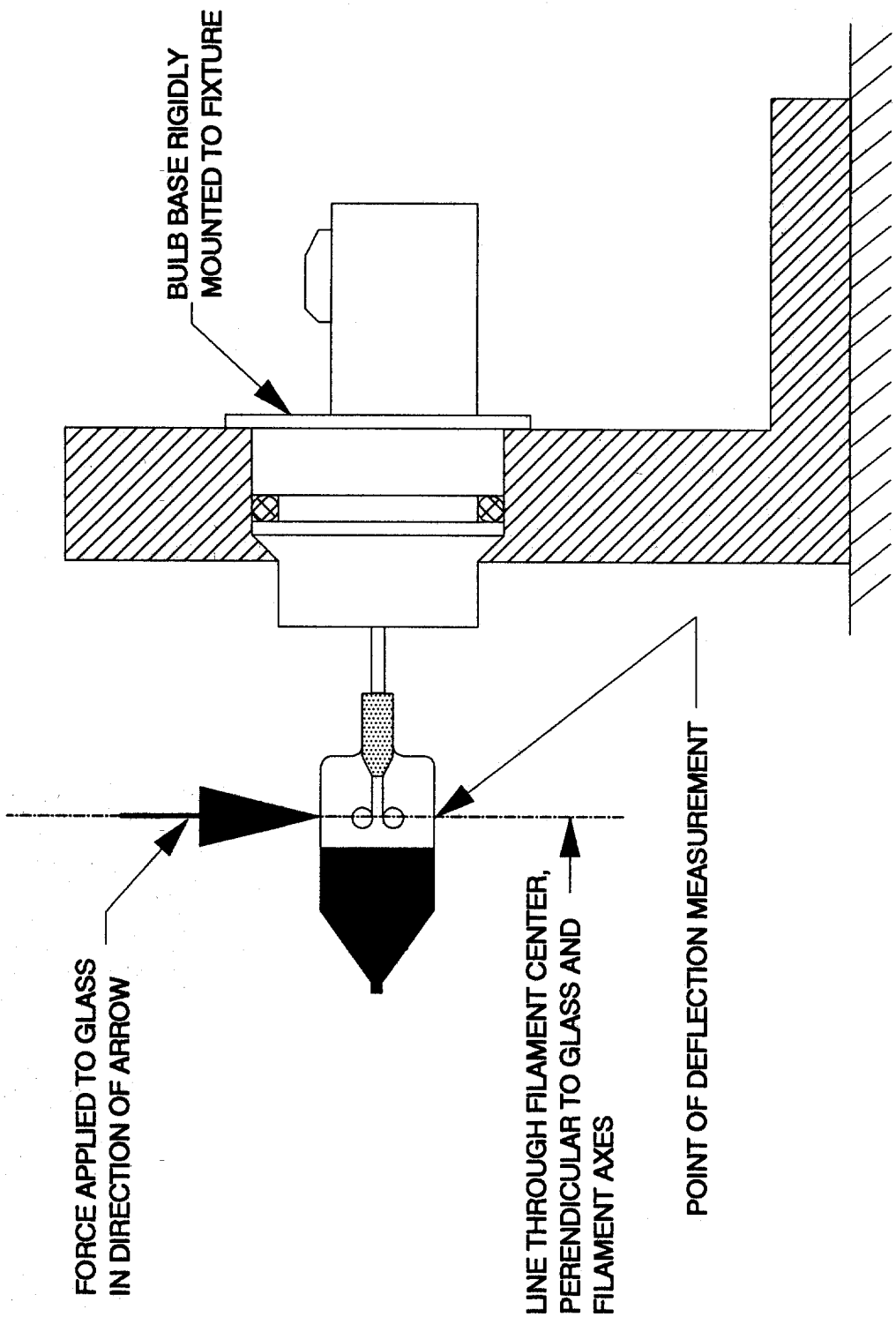

* * * * *

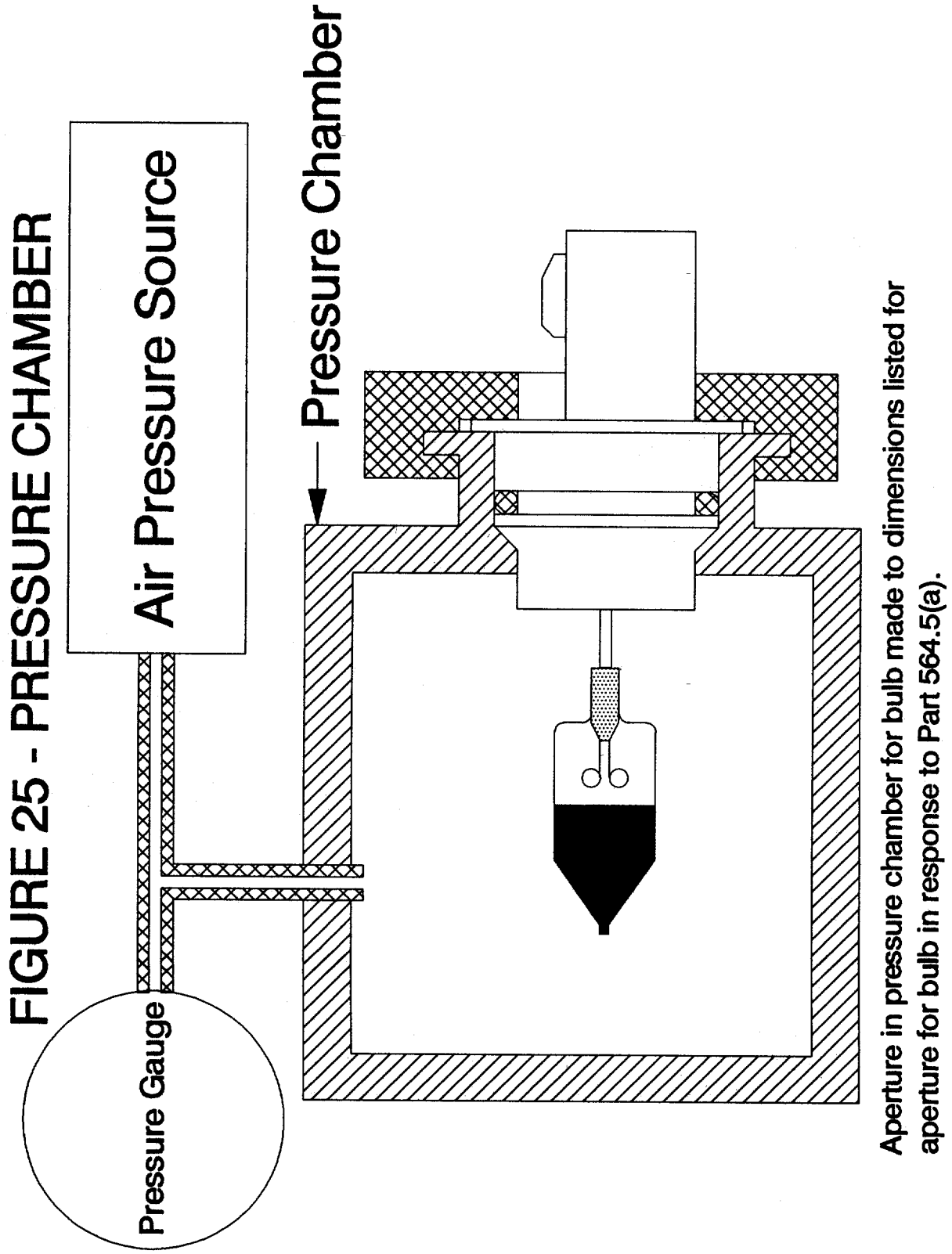

FIGURE 25 - PRESSURE CHAMBER

BILLING CODE 4910–59–C

* * * * *

Issued on March 9, 1995.

Barry Felrice,

Associate Administrator for Rulemaking.

[FR Doc. 95–6379 Filed 3–16–95; 8:45 am]

BILLING CODE 4910–59–P

DEPARTMENT OF THE INTERIOR

Fish and Wildlife Service

50 CFR Part 17

Endangered and Threatened Wildlife and Plants; Notice of Public Hearing and Reopening of Comment Period on Proposed Endangered Status for Four Plants From Vernal Pools and Mesic Areas in Northern California

AGENCY: Fish and Wildlife Service, Interior.

ACTION: Proposed Rule; notice of public hearing and reopening of comment period.

SUMMARY: The Fish and Wildlife Service (Service), pursuant to the Endangered Species Act of 1973, as amended (Act), provides notice that a public hearing will be held on the proposed endangered status for *Lasthenia conjugens* (Contra Costa goldfields), *Navarretia leucocephala* ssp. *pauciflora* (few-flowered navarretia), *Navarretia leucocephala* ssp. *plieantha* (many-flowered navarretia), and *Parvisedum leiocarpum* (Lake County stonecrop). In addition, the Service has reopened the comment period. All parties are invited to submit comments on this proposal.

DATES: The public hearing will be held from 6:00 p.m. to 8:00 p.m. on Thursday, April 6, 1995, in Napa, California. The public comment period now closes April 28, 1995. Any comments received by the closing date will be considered in the final decision on this proposal.

ADDRESSES: The public hearing will held at the Napa Valley Marriott Hotel, 3425 Solano Avenue, Napa, California. Written comments and materials concerning this proposal may be submitted at the hearing or may be sent directly to Field Supervisor, Sacramento Field Office, 2800 Cottage Way, Room E–1803, Sacramento, California 95825–1846. Comments and materials received will be available for public inspection, by appointment, during normal business hours at the above address.

FOR FURTHER INFORMATION CONTACT: Betty Warne (see **ADDRESSES** section) or at 916/979–2120.

SUPPLEMENTARY INFORMATION:

Background

Lasthenia conjugens (Contra Costa goldfields), *Navarretia leucocephala* ssp. *pauciflora* (few-flowered navarretia), *Navarretia leucocephala* ssp. *plieantha* (many-flowered navarretia), and *Parvisedum leiocarpum* (Lake County stonecrop) grow in vernal pools and mesic grasslands and are found variously in Lake, Napa, Solano, and Sonoma Counties. The three remaining populations of Lake County stonecrop occur on private lands in Lake County. The seven remaining populations of Contra Costa goldfields occur in Napa and Solano Counties. The five remaining populations of few-flowered navarretia occur in Napa and Lake Counties. The seven remaining populations of many-flowered navarretia occur in Lake and Sonoma counties.

These four vernal pool plants proposed for listing are imperiled by one or more of the following; commercial, residential, and agricultural development, hydrological changes in vernal pool and swale habitats, trampling by livestock, road widening, inadequate regulatory protection mechanisms, random stochastic events, off- highway vehicle use, feral pigs, and horseback riding. As a result of the immediate threats against these plant populations, the Service is proposing to list these four species as endangered to afford them protection of the Act.

On December 19, 1994, the Service published a proposed rule on proposed endangered status for *Lasthenia conjugens, Navarretia leucocephala* ssp. *pauciflora, Navarretia leucocephala* ssp. *plieantha,* and *Parvisedum leiocarpum* (59 FR 65311). Section 4(b)(5)(E) of the Act requires that a public hearing be held if one is requested within 45 days of the publication of the proposed rule in the **Federal Register**. Public hearing requests were received within the allotted time period from Michael Delbar, Executive Director, Lake County Farm Bureau, Lakeport, California and from Daniel Macon, Director Industry Affairs, California Cattlemen's Association, Sacramento, California. As a result, the Service has scheduled a public hearing on April 6, 1995, at Napa Valley Marriott Hotel, 3425 Solano Avenue, Napa, California.

Anyone wishing to make statements for the record should bring a written copy of their statements to the hearing. Oral statements may be limited in length if the number of parties present at the hearing necessitates such a limitation. Oral and written comments receive equal consideration. The Service places no limits to the length of written comments or materials presented at the hearing or mailed to the Service. Legal notices announcing the date, time, and location of the hearing are being published in newspapers concurrently with this **Federal Register** notice.

The comment period on the proposal was to close on February 17, 1995. To accommodate the hearing, the public comment period is reopened upon publication of this notice. Written comments may now be submitted until April 28, 1995, to the Service office in the **ADDRESSES** section.

Authority

The authority for this action is the Endangered Species Act of 1973 (16 U.S.C. 1531 *et seq.*).

Dated: March 9, 1995.

William F. Shake,

Acting Regional Director, Region 1 U.S. Fish and Wildlife Service.

[FR Doc. 95–6470 Filed 3–15–95; 8:45 am]

BILLING CODE 4310–55–P

DEPARTMENT OF COMMERCE

National Oceanic and Atmospheric Administration

[Docket No. 941084–4284; I.D. 080894C]

50 CFR Part 227

Endangered and Threatened Species; Proposed Threatened Status for Southern Oregon and Northern California Steelhead

AGENCY: National Marine Fisheries Service (NMFS), National Oceanic and Atmospheric Administration (NOAA), Commerce.

ACTION: Proposed rule; request for comments.

SUMMARY: NMFS is issuing a proposed rule to list natural steelhead (*Oncorhynchus mykiss*) populations (progeny of naturally-spawning fish) occurring between Cape Blanco, OR, and the Klamath River Basin, in Oregon and California (inclusive; hereinafter referred to as the Klamath Mountains Province) as threatened under the Endangered Species Act of 1973 (ESA). NMFS has determined that Klamath Mountains Province steelhead populations constitute a ''species'' as interpreted under the ESA. Should the proposed listing be made final, protective regulations under the ESA would be put into effect and a recovery program would be implemented.

DATES: Comments must be received by May 15, 1995. Requests for a public hearing must be received by May 1, 1995.

ADDRESSES: Comments on this proposed rule, requests for public hearings, and requests for supporting documents should be sent to the Environmental and Technical Services Division, NMFS, Northwest Region, 911 NE. 11th Avenue, Suite 620, Portland, OR 97232.

FOR FURTHER INFORMATION CONTACT: Garth Griffin, 503–230–5430; R. Craig Wingert, 310–980–4021; or Marta Nammack, 301/713–2322.

SUPPLEMENTARY INFORMATION:

Petition Background

On May 5, 1992, NMFS received a petition from the Oregon Natural Resources Council, the Siskiyou Regional Education Project, Federation of Fly Fishers, Kalmiopsis Audubon Society, Siskiyou Audubon Society, Klamath/Siskiyou Coalition, Headwaters, The Wilderness Society, North Coast Environmental Center, The Sierra Club - Oregon Chapter, and the National Wildlife Federation, to list indigenous, naturally-spawning Illinois River winter steelhead (*Oncorhynchus mykiss*) and to designate critical habitat under the ESA. After publishing a document that a listing may be warranted (57 FR 33939, July 31, 1992), and soliciting information about the status of this population, the NMFS Northwest Fisheries Science Center Biological Review Team (BRT) completed a status review (Busby et al. 1993) that was summarized in a May 20, 1993, publication (58 FR 29390). The BRT concluded that the Illinois River winter steelhead did not represent a ''species'' under the ESA (see 56 FR 58612, November 20, 1991), and therefore, a proposal to list Illinois River winter steelhead under the ESA was not warranted. However, NMFS recognized that this population was part of a larger Evolutionarily Significant Unit ((ESU); see Consideration as a ''Species'' Under the ESA, below), whose extent had not yet been determined, but whose status may warrant listing because of declining trends in steelhead abundance in several southern Oregon streams. An expanded status review was initiated (58 FR 29390, May 20, 1993) to identify ESU(s) within California, Oregon, and Washington, and to determine whether any identified ESU(s) warrant listing under the ESA. NMFS received an additional petition to list Deer Creek summer steelhead, and found that listing of this population may be warranted (58 FR 68108, December 23, 1993). In response to a petition from the Oregon Natural Resources Council and 15 co-petitioners, February 16, 1994, NMFS later announced that the status review of steelhead was further expanded to include Idaho populations (59 FR 27527, May 27, 1994).

Biological Background

The BRT has completed biological evaluations associated with the determination of the geographic boundaries of the ESU that includes the Illinois River winter steelhead and whether the ESU warrants listing as endangered or threatened under the ESA. The BRT has prepared an administrative report detailing the conclusions of their status review (Northwest Fisheries Science Center BRT 1994). A summary of this report follows. A more complete discussion of the subject, including additional references, will be available upon request in the near future (see **ADDRESSES**).

The name steelhead refers to the anadromous form of the rainbow trout. Recently, the scientific name for the biological species that includes both steelhead and rainbow trout was changed from *Salmo gairdneri* to *Oncorhynchus mykiss*. This change reflects a belief that all trouts from western North America share a common lineage with Pacific salmon. The present endemic distribution of steelhead extends from the Kamchatka Peninsula, Asia, east and south, along the Pacific coast of North America, to Malibu Creek in southern California.

Steelhead exhibit a wide variety of life history strategies. In general, steelhead migrate to the sea after spending 2 years in fresh water and then spend 2 years in the ocean prior to returning to fresh water to spawn. Variations of this pattern are common. Some spawners survive and return to the ocean for 1 or more years between spawning migrations. Some steelhead return to fresh water after only a few months at sea and are termed ''half-pounders,'' having attained the approximate size that inspired this term. Half-pounders generally spend the winter in fresh water and then return to sea for several months before returning to fresh water to spawn.

Steelhead exhibit several spawning migration strategies. ''Summer-run steelhead'' enter fresh water between May and October, and begin their spawning migration in a sexually immature state. After several months in fresh water, summer steelhead mature and spawn. ''Winter-run steelhead'' enter fresh water between November and April with well-developed gonads. In drainages with populations of both summer- and winter-run steelhead, there may or may not be temporal or spatial separation of spawning.

Consideration as a ''Species'' Under the ESA

To qualify for listing as a threatened or endangered species, the identified populations of steelhead must be a ''species'' under the ESA. The ESA defines a ''species'' to include any ''distinct population segment of any species of vertebrate . . . which interbreeds when mature.'' NMFS published a policy (56 FR 58612, November 20, 1991) describing how the agency will apply the ESA definition of ''species'' to Pacific salmonid species, including steelhead. This policy provides that a salmonid population will be considered distinct, and hence a species under the ESA, if it represents an ESU of the biological species. The population must satisfy two criteria to be considered an ESU: (1) It must be reproductively isolated from other conspecific population units, and (2) it must represent an important component in the evolutionary legacy of the biological species. The first criterion, reproductive isolation, need not be absolute, but must be strong enough to permit evolutionarily important differences to develop in different population units. The second criterion would be met if the population contributed substantially to the ecological/genetic diversity of the species as a whole. Guidance on the application of this policy is contained in ''Pacific Salmon (*Oncorhynchus* spp.) and the Definition of Species under the Endangered Species Act,'' which is available upon request (see **ADDRESSES**).

Reproductive Isolation

For this criterion, NMFS considered available information on the geographic extent and reproductive strategies (e.g., run timing) of the ESU containing the Illinois River winter steelhead. In general, steelhead are believed to have strong tendencies to home to their natal streams, but there are few studies directly relevant to the area under consideration. There is evidence that some adult steelhead move between the Klamath, Rogue, and Smith Rivers. However, it is not clear whether this wandering results in spawning within non-natal streams.

Available genetic information indicates that there is a genetic discontinuity (or at least a transition) between steelhead from coastal streams in southern and northern Oregon. Although the discontinuity/transition appears to be in the vicinity of Cape Blanco, the resolution of genetic sampling does not allow for precise definition of this boundary.

Several genetic samples from northern California steelhead were considered during this status review. Samples from the Klamath River and the Trinity River (a tributary to the Klamath River) do not differ substantially from steelhead populations to the north. However, there are large genetic differences between samples from the Klamath River Basin and those taken from rivers to the south. The differences between steelhead from these two areas are stronger than those between southern

and northern Oregon steelhead populations.

Within the area bounded by Cape Blanco and the Klamath River Basin, there is evidence of genetic heterogeneity, suggesting a reasonable degree of reproductive isolation between individual populations. However, the genetic structuring has no clear geographic pattern that would allow identification of major subgroups within this area.

In addition to summer- and winter-run steelhead, there are populations sometimes referred to as fall-run steelhead in the Klamath River Basin. Disagreement exists as to whether these fall-run steelhead should be considered summer-run, winter-run, or a separate entity. During this status review, NMFS considered fall-run steelhead from the Klamath River Basin to be part of the summer run.

Because most summer-run steelhead populations in the Klamath Mountains Province are substantially depressed and difficult to sample, genetic studies during the expanded status review focused on winter-run steelhead. However, other genetic studies that considered both winter and summer steelhead from other areas have failed to find consistent genetic differences between run-types within individual regions (Allendorf 1975; Utter and Allendorf 1977; Chilcote et al. 1980; Schreck et al. 1986; Reisenbichler and Phelps 1989; Reisenbichler et al. 1992). Therefore, NMFS concludes that all runs of steelhead within the Klamath Mountains Province should be considered part of the same ESU.

Patterns of ocean migration of salmon and steelhead may reflect reproductive isolation of spawning populations. Chinook salmon populations from south of Cape Blanco are generally considered south-migrating (e.g., to ocean areas off southern Oregon and California), whereas stocks from north of Cape Blanco are considered north-migrating. Other studies suggest that coho salmon and steelhead from south of Cape Blanco may not be highly migratory, remaining instead in the highly productive oceanic waters off southern Oregon and northern California (Pearcy et al. 1990; Pearcy 1992).

NMFS is not aware of any direct evidence about the relationship between the anadromous and nonanadromous life history forms of *O. mykiss* within the Klamath Mountains Province. Although it has been reported that these two life history forms within a geographic area may be more genetically similar to each other than either is to the same form from outside the area, other studies have found evidence for reproductive isolation between anadromous and nonanadromous *O. mykiss.* NMFS' policy contained in ''Pacific Salmon and the Definition of Species under the ESA'' states that anadromous and nonanadromous forms should be considered separately if they are reproductively isolated. Reproductive isolation, as previously noted, is a question of degree. NMFS has determined that, until specific information regarding these two life history forms within the Klamath Mountains Province becomes available, nonanadromous fish will not be considered part of the ESU. This determination may be reconsidered if information demonstrating that the two forms share a common gene pool becomes available.

Ecological/Genetic Diversity

Several types of physical and biological information were considered during evaluation of the contribution of Klamath Mountains Province steelhead to ecological/genetic diversity, including: (1) Physical environment, (2) zoogeography, and (3) life history characteristics. The Klamath Mountains Geological Province extends from the vicinity of Cape Blanco in the north to the Klamath River Basin (inclusive) in the south. Ecologically, the province includes areas that are warmer and drier than coastal regions to the north and south; interior valleys receive less precipitation than any other Pacific Northwest location west of the Cascade Mountain Range. The nearshore ocean environment in this region is strongly affected by seasonal upwelling, which extends southward from Cape Blanco, with some local variations as far south as 33°N. lat.

Zoogeographic studies of freshwater fishes have consistently identified differences in fish assemblages between the Rogue River Basin and streams to the north. Also, similarities have been noted between freshwater fish communities in the Klamath and Rogue River basins. For marine fishes, Cape Mendocino in California has been identified as an important southern limit of many northern species.

The occurrence of the half-pounder life history form of steelhead appears to be restricted to southern Oregon and northern California, identified in the Rogue, Klamath, Eel, and Mad rivers. It is likely that expression of this life history strategy is due to a combination of distinctive genetic and environmental factors.

ESU Determination

Several lines of evidence suggest that Cape Blanco is the northern boundary and the Klamath River Basin forms the southern boundary of the ESU that contains the Illinois River winter steelhead. Genetic and ocean distribution data suggest that there is substantial reproductive isolation between steelhead populations from north and south of Cape Blanco. Cape Blanco is also an approximate northern boundary for the Klamath Mountains Province, an area of intense upwelling in the ocean, the range of the half-pounder life history, and the Klamath-Rogue freshwater zoogeographic zone. Although Cape Mendocino in California is a natural landmark associated with changes in ocean currents, and also represents the approximate southern limit of the half-pounder life history, the Klamath River Basin forms the southern boundary of the Klamath Mountains Province and the Klamath-Rogue freshwater fish zoogeographic zone. Furthermore, genetic data show a sharp discontinuity between steelhead populations from the Klamath River Basin and those farther south. Based on available information, the BRT concluded that the geographic range of the ESU containing the Illinois River winter steelhead extends from the vicinity of Cape Blanco in southern Oregon to the Klamath River Basin (inclusive) in northern California (see Figure 1).

BILLING CODE 3510–22–P

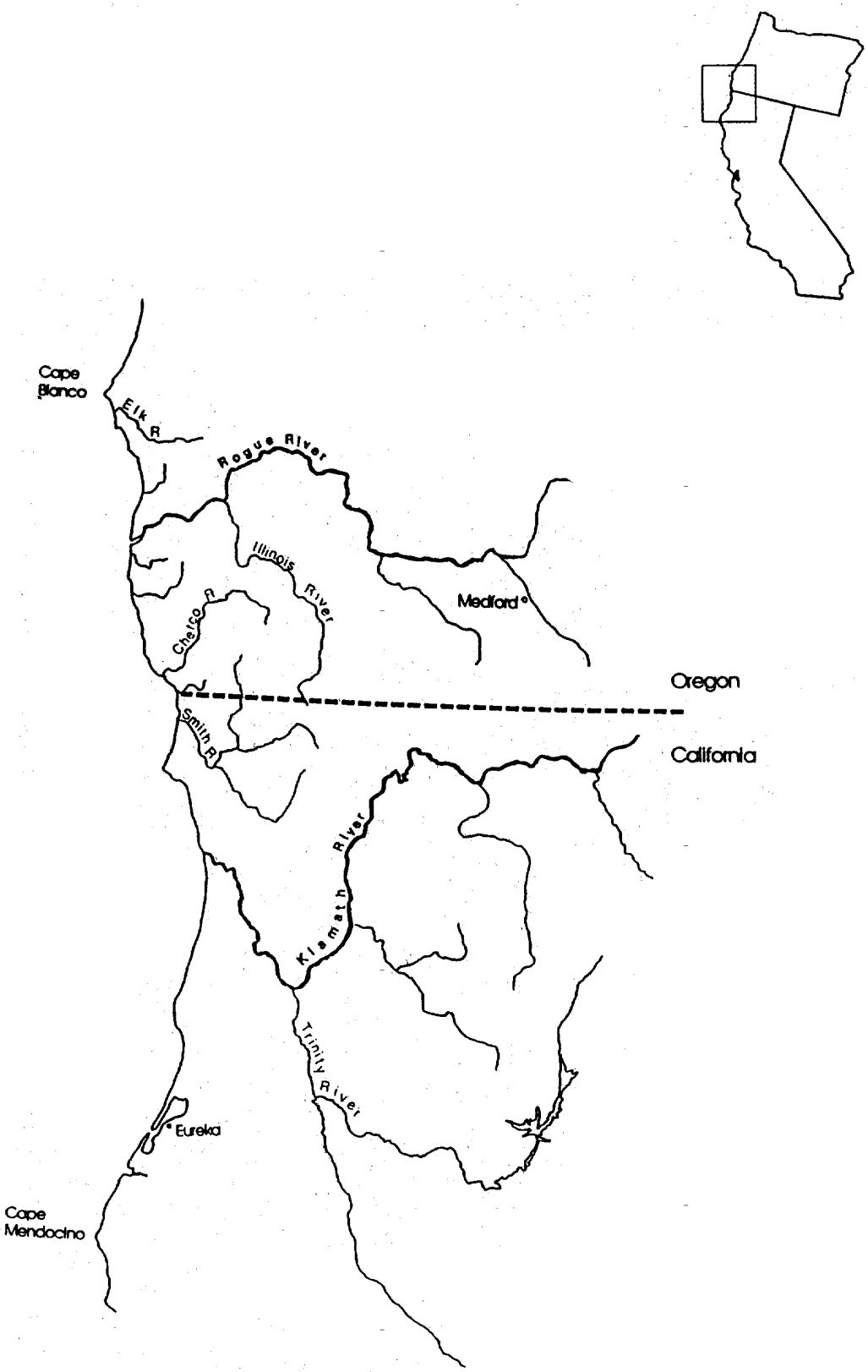

Figure 1. Geographic Range of the Klamath Mountain Province Steelhead ESU.

BILLING CODE 3510–22–C

Although diversity in run-timing is an important life history characteristic of steelhead within this ESU, and this diversity may be in part genetically based, there is little direct information about the degree of reproductive isolation between identified runs within the Klamath Mountains Province. Furthermore, previous genetic studies have failed to find consistent genetic differences between run-types within individual regions, and suggest that summer- and winter-run steelhead are not independent, monophyletic groups over broad geographic regions. Based on available evidence, the BRT concluded that all steelhead runs (those termed summer-, fall-, and winter-run) within the identified geographic boundaries should be considered together as one ESU, and therefore a species, as defined under the ESA.

Status of the Klamath Mountains Province ESU

NMFS uses a number of factors that should be considered in evaluating the level of risk faced by an ESU, including: (1) Absolute numbers of fish and their spatial and temporal distribution, (2) current abundance in relation to historical abundance and current carrying capacity of the habitat, (3) trends in abundance, (4) natural and human-influenced factors that cause variability in survival and abundance, (5) possible threats to genetic integrity (e.g., from strays or outplants from hatchery programs), and (6) recent events (e.g., a drought or changes in harvest management) that have predictable short-term consequences for abundance of the ESU.

During consideration of the ESU status, the BRT evaluated both qualitative and quantitative information. Recent qualitative analyses of the status of steelhead stocks within the Klamath Mountains Province have been conducted by agencies and conservation groups (Nehlsen et al. 1991; Nickelson et al. 1992; U.S. Forest Service 1993a,b; McEwan and Jackson 1994). Most winter steelhead stocks in the region are considered to be depressed and/or declining. Of the exceptions (those from the Rogue, Winchuck, Smith, and subbasins of the Klamath and Trinity Rivers), most are heavily influenced by hatchery production. Only the Smith River appears to have healthy and largely natural production of winter-run steelhead in this region. The best assessment of any summer steelhead stock in this region is depressed, and most were considered to be at moderate to high risk of extinction.

Quantitative evaluations included comparisons of current and historic abundance of steelhead. Because historical abundance information for the Klamath Mountains Province ESU is largely anecdotal, coastwide abundance trends provide a larger perspective for this review. Rough estimates of total coastwide steelhead abundance made in 1972 and 1987 suggested significant declines (Sheppard 1972, Light 1987). However, by all accounts, there has been significant replacement of natural production with hatchery fish. Over a large region (British Columbia, Washington, and Oregon), steelhead stocks (both natural and hatchery) have exhibited recent decreases in survival that may be due, in part, to climate and ocean production.

Historical abundance information for the Klamath Mountains Province ESU is largely anecdotal. Within this area, time-series data are available for most populations only since 1970. The BRT compiled and analyzed available information to provide summary statistics of spawning abundance. Not all summary statistics were available for all populations.

NMFS policy, as stated in ''Pacific Salmon and the Definition of ''Species'' under the ESA,'' focuses on viability of natural populations, and notes that an ESU is not healthy unless a viable population exists in the natural habitat. The BRT attempted to distinguish between naturally produced fish and hatchery produced fish. Total abundance (including hatchery populations) varies widely among populations within the proposed ESU, with several populations having run sizes of 10,000 or more fish. The heavily hatchery-influenced summer-run steelhead population from the Klamath River may total 100,000 or more fish. At the other extreme, a number of populations have less than 1,000 spawners per year.

Estimates of percent annual change in run size indicate that most of the steelhead populations in the Klamath Mountains Province are in significant decline, even with hatchery production included. The BRT considered that this assessment may be influenced by the recent coastwide decreases in steelhead survival (due to climate and ocean conditions). However, excluding recent years from the trend analysis did not substantially change overall conclusions for the stocks considered here.

Natural steelhead production was roughly indexed using natural return ratios. This index is an estimate of the ratio of naturally produced spawners in one generation to total spawners (both hatchery and naturally produced) in the previous generation. Natural production of all winter-, summer-, and fall-run steelhead within the Klamath Mountains Province appears to be below replacement for all populations for which the BRT had sufficient quantitative information. Considering the qualitative assessments, there is little reason to believe that other populations are in better condition (with the exception of the Smith River winter-run steelhead). Based on angler catch data, Illinois River winter steelhead (the natural population in southern Oregon with the least hatchery influence) have declined at an average rate of about 10 percent annually for the last 20 years. With this analysis, the BRT was unable to demonstrate that any steelhead populations in the Klamath Mountains Province are naturally self-sustaining.

Summary of Factors Affecting the Species

Section 2(a) of the ESA states that various species of fish, wildlife, and plants in the United States have been rendered extinct as a consequence of economic growth and development untempered by adequate concern and conservation. Section 4(a)(1) of the ESA and the listing regulations (50 CFR part 424) set forth procedures for listing species. NMFS must determine, through the regulatory process, if a species is endangered or threatened based upon any one or a combination of the following factors: (1) The present or threatened destruction, modification, or curtailment of its habitat or range; (2) overutilization for commercial, recreational, scientific, or education purposes; (3) disease or predation; (4) inadequacy of existing regulatory mechanisms; or (5) other natural or human-made factors affecting its continued existence.

A. The Present or Threatened Destruction, Modification, or Curtailment of its Habitat or Range

Logging, mining, agricultural activities (e.g., livestock grazing), and water withdrawals have likely contributed to the decline of steelhead populations within the Klamath Mountains Province ESU. Removal of trees within the riparian zone of streams in the Klamath Mountains Province has resulted in increased summer water temperatures and has eliminated the potential for trees to fall into streams. Large woody material in streams can provide cover, shade, and create pools; these habitat features are required by juvenile steelhead. Logging activities, and the associated road networks, can result in soil erosion and sedimentation of streams. Livestock grazing can eliminate streamside vegetation and

prevent riparian species from growing to maturity, resulting in shallow, warm streams that are not suitable for juvenile and adult steelhead. Water withdrawals reduce stream flow, sometimes during critical periods, and can contribute to high water temperature problems.

In the Klamath and Rogue River Basins, dams without fish passage facilities have decreased the amount of habitat available for steelhead, and may have contributed to the decrease in Klamath Mountains Province steelhead populations. There are also fish passage concerns regarding dams with inadequate fish passage facilities.

B. Overutilization for Commercial, Recreational, Scientific, or Education Purposes

Klamath Mountains Province steelhead are not currently targeted for commercial harvest, and scientific and educational programs have had little or no impact on Klamath Mountains Province steelhead populations. However, steelhead are popular gamefish throughout the Pacific Northwest and, in some locations, recreational fishing may contribute to the general decline of steelhead populations. Also, poaching may pose an additional threat to some depressed populations of adult steelhead. Summer-run steelhead are particularly susceptible to poaching activity because of holding/resting behavior in deep pools.

C. Disease or Predation

Disease is not believed to be a major factor contributing to the decline of steelhead populations in the Klamath Mountains Province. Declines in some summer steelhead populations are reportedly due, in part, to predation by marine mammals (Nehlsen et al. 1991).

D. Inadequacy of Existing Regulatory Mechanisms

Early mechanisms regulating local mining and timber harvest activities in the Klamath Mountains Province clearly were inadequate. Early mining practices were particularly destructive in portions of the Rogue and Trinity River (a tributary of the Klamath River) watersheds. Although most of these particularly destructive mining and timber harvest activities no longer occur, land management activities still contribute to adverse habitat modifications.

The continued decline of Klamath Mountains Province steelhead suggests that management plans and practices followed by the U.S. Forest Service (USFS), Bureau of Land Management (BLM), Oregon Department of Fish and Wildlife, and California Department of Fish and Game have not provided adequate protection for this species. A Federal interagency cooperative program, the Record of Decision for Amendments to USFS and BLM Planning Documents Within the Range of the Spotted Owl (the Forest Plan, April 1994), has recently been implemented to provide a coordinated land management direction for the lands administered by USFS and BLM within the range of the northern spotted owl, which includes the Klamath Mountains Province. While the extent of protection provided by the Forest Plan is not yet known, its region-wide management direction will amend existing management plans, including Forest Plans, Regional Guides, Timber Sale Plans, and Resource Management Plans for lands within the range of the northern spotted owl. As part of the Forest Plan, implementation of the Aquatic Conservation Strategy (ACS) may help reverse the trend of aquatic ecosystem degradation and contribute toward fish habitat recovery. Coordination between the Federal land management agencies and NMFS, the Environmental Protection Agency, and the U.S. Fish and Wildlife Service should ensure that the ACS objectives are achieved.

Steelhead are popular gamefish throughout the Pacific Northwest and, in some locations, recreational fishing may contribute to the general decline of Klamath Mountains Province steelhead populations. Existing harvest regulations may not be adequate to protect a substantial portion of the Klamath Mountains Province's juvenile and adult steelhead populations from overutilization by recreational anglers.

E. Other Natural or Manmade Factors Affecting its Continued Existence

Drought conditions may contribute to reduced Klamath Mountains Province steelhead production. In general, drought conditions have existed in southern Oregon since 1977.

Unusually warm ocean surface temperatures and associated changes in coastal currents and upwelling, known as El Niño conditions, have occurred in recent years and resulted in ecosystem alterations such as reductions in primary and secondary productivity and changes in prey and predator species distributions. Based on fish distribution, El Niño conditions may affect individual salmonid populations differently. For example, during El Niño conditions, chinook salmon stocks that rear in ocean areas south of Vancouver Island generally survive at a lower rate than chinook salmon stocks that inhabit northerly ocean areas (Johnson 1988). As there is some evidence that steelhead originating from south of Cape Blanco rarely migrate north of Cape Blanco, Klamath Mountains Province steelhead populations may be particularly susceptible to the adverse affects of El Niño conditions.

Artificial propagation has, in some cases, impacted Klamath Mountains Province steelhead populations. Potential problems associated with hatchery programs include genetic impacts on indigenous wild populations, difficulty in determination of wild run status due to incomplete marking of hatchery releases, and replacement (rather than supplementation) of wild stocks through continued annual introductions of steelhead.

Proposed Determination

The ESA defines an endangered species as any species in danger of extinction throughout all or a significant portion of its range, and a threatened species as any species likely to become an endangered species within the foreseeable future throughout all or a significant portion of its range. Section 4(b)(1) of the ESA requires that the listing determination be based solely on the best scientific and commercial data available, after conducting a review of the status of the species and after taking into account those efforts, if any, being made to protect such species.

Based on its assessment of the best scientific and commercial information available, NMFS determines that all Klamath Mountains Province steelhead populations (i.e., summer-, fall-, and winter-run) constitute an ESU and, therefore, a ''species'' under the ESA. Estimates of percent annual change in run size indicate that most of the steelhead populations in the Klamath Mountains Province are in significant decline. Although trends in abundance of most steelhead populations within the ESU have been downward, absolute abundance of steelhead in several streams within the proposed ESU remains fairly high; thus the BRT concluded that the ESU as a whole cannot be considered to be endangered at this time. However, available information indicates that Klamath Mountains Province steelhead populations are not self-sustaining. If present trends continue, there is a significant probability that the ESU will become endangered. Therefore, NMFS proposes to list all Klamath Mountains Province natural steelhead (progeny of naturally-spawning fish) as threatened. Prior to development of a final rule, NMFS will continue to consider the

status of steelhead populations within the Klamath Mountains Province and determine which, if any, hatchery populations are essential for recovery of listed steelhead.

Proposed Protective Regulations and Measures

In addition to the proposed listing, NMFS proposes to adopt protective measures, pursuant to section 4(d) of the ESA, to prohibit, with respect to Klamath Mountains Province natural steelhead, taking, interstate commerce, import and export, and the other prohibitions pursuant to section 9 of the ESA applicable to endangered species, with the exceptions provided by section 10 of the ESA.

NMFS recognizes that protective regulations and recovery programs for Klamath Mountains Province steelhead will need to be developed in the context of conserving aquatic ecosystem health, and intends that Federal lands and Federal activities bear as much of the burden as possible for conserving listed populations. However, steelhead habitat within this ESU occurs and can be affected by activities on state, tribal and private land. Non-Federal landowners are encouraged to assess the impacts of their actions on potentially threatened steelhead and to participate in the formulation of watershed partnerships that promote conservation in accordance with ecosystem principles. NMFS will seek the advice and assistance of Federal and non-Federal jurisdictions, including tribal and county governments, private organizations and affected individuals in recovery plan development and implementation.

NMFS will identify, to the extent known at the time of a final rule, specific activities that will not be considered likely to result in adverse impacts to listed Klamath Mountains Province steelhead. NMFS is soliciting recommendations as to what activities should be so identified, as well as terms and conditions for specific types of land or water use activities that would avoid adverse impacts to listed steelhead. The activities, as modified by the recommended terms and conditions, should promote the conservation of Klamath Mountains Province steelhead.

Conservation measures provided to species listed as threatened or endangered under the ESA included prohibitions on taking, recovery actions, and Federal agency consultation requirements. Recognition through listing promotes conservation actions by Federal and state agencies and private groups and individuals.

Section 7(a)(4) of the ESA requires that Federal agencies confer with NMFS on any actions likely to jeopardize the continued existence of a species proposed for listing and on actions resulting in destruction or adverse modification of proposed critical habitat. ''Conference'' is defined at 50 CFR 402.02 to mean ''a process which involves informal discussions between a Federal agency and the Service . . . regarding the impact of an action on proposed species or proposed critical habitat and recommendations to minimize or avoid the adverse effects.'' For listed species, section 7(a)(2) requires Federal agencies to ensure that activities they authorize, fund, or conduct are not likely to jeopardize the continued existence of a listed species or to destroy or adversely modify its critical habitat. If a Federal action may adversely affect a listed species or its critical habitat, the responsible Federal agency must enter into formal consultation with NMFS. Non-Federal entities requesting the incidental take of listed species must develop a conservation plan associated with their proposed action. Prior to issuance of an incidental take permit, NMFS must review the conservation plan and determine that the proposed action will not appreciably reduce the likelihood of the survival and recovery of the species in the wild (see 50 CFR 222.22).

Examples of Federal actions that may be affected by this proposal include, but are not limited to, various Federal land management agency activities (e.g., actions associated with timber harvest, mining, and grazing), U.S. Army Corps of Engineers (COE) Clean Water Act section 404 permitting activities, Federal Energy Regulatory Commission licenses for non-Federal development and operation of hydropower, commercial fishery management under a regional fishery management council, and hatchery operations authorized, carried out, or funded by a Federal agency.

Measures that could be implemented to help protect and conserve the species include, but are not limited to:

1. All water diversions could have adequate headgate and staff gauge structures installed to control and monitor water usage accurately. Water rights should be enforced to prevent irrigators from exceeding the amount of water to which they are legally entitled.

2. All irrigation diversions affecting downstream migrating Klamath Mountains Province steelhead could be screened. A thorough review of the impact of irrigation diversions on steelhead could be conducted.

3. Artificial propagation could be conducted in a manner minimizing impacts upon native populations of steelhead.

4. Efforts could be made to ensure that adult passage facilities at dams effectively pass migrating salmon upstream.

5. Evaluation of existing recreational harvest regulations could identify any changes necessary in light of the Klamath Mountains Province steelhead status.

Some or all of these measures, as well as other measures not enumerated here, may be required to be undertaken through the section 7 consultation or section 10 permitting processes. NMFS will also consider these and additional measures in developing a recovery plan pursuant to section 4(f).

NMFS encourages non-Federal landowners to assess the impacts of their actions on potentially threatened or endangered salmonids. In particular, NMFS encourages the formulation of watershed partnerships to promote conservation in accordance with ecosystem principles. These partnerships will be successful only if all watershed stakeholders (i.e., state, tribal, and local governments, landowner representatives, and Federal and non-Federal biologists) participate and share the goal of restoring steelhead to the watersheds. To assist with such efforts, NMFS, the U.S. Fish and Wildlife Service and the U.S. Environmental Protection Agency, with technical assistance from the Natural Resources Conservation Service, have contracted a study to provide technical guidance and training to agency staff. This guidance is intended to produce a technical foundation and informational support base for fostering development of conservation plans pursuant to section 10 of the ESA and cooperative agreements with the states of Washington, Oregon, and California, pursuant to section 6 of the ESA. Furthermore, NMFS intends to enlist non-Federal jurisdictions, including tribal and county governments, private organizations and affected individuals, in recovery plan development and implementation.

Critical Habitat

Section 4(a)(3)(A) of the ESA requires that, to the extent prudent and determinable, critical habitat be designated concurrently with the listing of a species. While NMFS has completed its analysis of the biological status of Klamath Mountains Province steelhead, it has not completed the analysis necessary for designating critical habitat. Therefore, to avoid

delaying this listing proposal, NMFS will propose critical habitat in a separate rulemaking.

Public Comments Solicited

To ensure that the final action resulting from this proposal will be as accurate and as effective as possible, NMFS is soliciting comments and suggestions from the public, other concerned governmental agencies, the scientific community, industry, and any other interested parties (see **DATES** and **ADDRESSES**) regarding the stock composition and abundance of all steelhead stocks within the Klamath Mountains Province. NMFS is also requesting information identifying specific areas that qualify as critical habitat for Klamath Mountains Province steelhead and the economic costs and benefits of additional requirements of management measures likely to result from designating critical habitat. Information about the relationship between existing hatchery populations and natural populations within the ESU, and the relationship between anadromous and nonanadromous populations of *O. mykiss* within the ESU, is also of great interest.

NMFS is also requesting suggestions for specific regulations under section 4(d) of the ESA that could apply to Klamath Mountains Province steelhead. Suggested regulations should address activities, plans, or guidelines that, despite their potential to result in the incidental take of listed fish, will ultimately promote the conservation of this ESU.

NMFS will review all public comments and any additional information regarding the status of the proposed ESU, and, as required under the ESA, intends to complete a final rule within one year of this proposed rule. The availability of new information may cause NMFS to re-assess the status of this ESU. The final decision on this proposal will take into consideration the comments and any additional information received by NMFS, and may differ from this proposed rule.

Classification

The 1982 amendments to the ESA, in section 4(b)(1)(A), restrict the information that may be considered when assessing species for listing. Based on this limitation of criteria for a listing decision and the opinion in *Pacific Legal Foundation* v. *Andrus*, 675 F. 2d 825 (6th Cir., 1981), NMFS has categorically excluded all ESA listing actions from environmental assessment requirements of National Environmental Policy Act (48 FR 4413, February 6, 1984).

This proposed rule is exempt from review under E.O. 12866.

References

Allendorf, F.W. 1975. Genetic Variability in a Species Possessing Extensive Gene Duplication: Genetic Interpretation of Duplicate Loci and Examination of Genetic Variation in Populations of Rainbow Trout. Ph.D. Dissertation, Univ. Washington, Seattle, 98 p.

Busby, P.J., O.W. Johnson, T.C. Wainwright, F.W. Waknitz, and R.S. Waples. 1993. Status Review for Oregon's Illinois River Winter Steelhead. NOAA Technical Memorandum. NMFS–NWFSC–10.

Chilcote, M. N., B. A. Crawford, and S. A. Leider. 1980. A Genetic Comparison of Sympatric Populations of Summer and Winter Steelheads. Trans. Am. Fish. Soc. 109:203–208.

Johnson, S.L. 1988. The Effects of the 1983 El Niño on Oregon's Coho (*Oncorhynchus kisutch*), and Chinook (*Oncorhynchus tshawytscha*) Salmon. Fisheries Research. 6:105–123.

Light, J.T. 1987. Coastwide Abundance of North American Steelhead Trout. (Document Submitted to the Annual Meeting of the INPFC, 1987.) Fisheries Research Institute Report FRI–UW–8710. Univ. Washington, Seattle, WA. 18 p.

McEwan, D., and Jackson, T. A. 1994. Steelhead Management Plan for California. California Department Fish and Game. (Available Environmental and Technical Services Division, NMFS, 911 N.E. 11th Ave., Room 620, Portland, OR 97232.)

Nehlsen, W., J.E. Williams, and J.A. Lichatowich. 1991. Pacific Salmon at the Crossroads: Stocks at Risk from California, Oregon, Idaho, and Washington. Fisheries 16(2):4–21.

Nickelson, T.E., J.W. Nicholas, A.M. McGie, R.B. Lindsay, D.L. Bottom, R.J. Kaiser, and S.E. Jacobs. 1992. Status of Anadromous Salmonids in Oregon Coastal Basins. Unpubl. manuscr., 83 p., Research and Development Section, Oregon Department of Fish and Wildlife (ODFW), Corvallis, and Ocean Salmon Management, ODFW, Newport, OR.

Northwest Fisheries Science Center Biological Review Team (BRT). 1994. May 2 Administrative Report: Conclusions of the Northwest Science Center's Status Review of Southern Oregon/Northern California Steelhead. 13 p.

Pearcy, W.G. 1992. Ocean Ecology of North Pacific Salmonids. University of Washington Press, Seattle, WA. 179 p.

Pearcy, W.G., R.D. Brodeur, and J.P. Fisher. 1990. Distribution and Biology of Juvenile Cutthroat Trout *Oncorhynchus clarki clarki* and Steelhead *O. mykiss* in Coastal Waters of Oregon and Washington. Fish. Bull., U.S. 88(4):697–711.

Reisenbichler, R.R., J.D. McIntyre, M.F. Solazzi, and S.W. Landino. 1992. Genetic Variation in Steelhead of Oregon and Northern California. Trans. Am. Fish. Soc. 121:158–169.

Reisenbichler, R.R., and S.R. Phelps. 1989. Genetic Variation in Steelhead (*Salmo gairdneri*) from the North Coast of Washington. Can. J. Fish. Aquat. Sci. 46:66–73.

Schreck, C.B., H.W. Li, R.C. Hjort, and C.S. Sharpe. 1986. Stock Identification of Columbia River Chinook Salmon and Steelhead Trout. Final Report to Bonneville Power Administration, Contract DE–A179–83BP13499, Project 83–451, 184 p. (Available Bonneville Power Administration, P.O. Box 351, Portland, OR 97208.)

Sheppard, D. 1972. The Present Status of the Steelhead Trout Stocks Along the Pacific Coast. In D.H. Rosenberg (editor), A Review of the Oceanography and Renewable Resources of the Northern Gulf of Alaska, p. 519–556. IMS Report R72–23, Sea Grant Report 73–3. Institute of Marine Science, University of Alaska, Fairbanks, AK.

United States Forest Service, U.S. Department of Agriculture (USFS). 1993a. Letter to ESA Administrative Record for coastal steelhead from Hugh Black. Letter Dated July 19, 1993, 2 p. and Enclosures. (Available Environmental and Technical Services Division, NMFS, 911 NE. 11th Ave., Room 620, Portland, OR 97232.)

United States Forest Service, U.S. Department of Agriculture (USFS). 1993b. Letter to ESA Administrative Record for Coastal Steelhead from Hugh Black. Letter Dated August 4, 1993, 2 p. and Enclosures. (Available Environmental and Technical Services Division, NMFS, 911 NE. 11th Ave., Room 620, Portland, OR 97232.)

Utter, F.M., and F.W. Allendorf. 1977. Determination of the Breeding Structure of Steelhead Populations through Gene Frequency Analysis. *In* T.J. Hassler and R.R. VanKirk (editors), Proceedings of the Genetic Implications of Steelhead Management Symposium, May 20–21, 1977, Arcata, CA, p. 44–54. Special Report 77–1. Calif. Coop. Fish. Res. Unit.

List of Subjects in 50 CFR Part 227

Endangered and threatened species, Exports, Imports, Marine mammals, Transportation.

Dated: March 10, 1995.

Gary Matlock,

Program Management Officer, National Marine Fisheries Service.

For the reasons set out in the preamble, 50 CFR part 227 is proposed to be amended as follows:

PART 227—THREATENED FISH AND WILDLIFE

1. The authority citation for part 227 continues to read as follows:

Authority: 16 U.S.C. 1531 *et seq.*

2. In § 227.4, a new paragraph (g) is added to read as follows:

§ 227.4 Enumeration of threatened species.

* * * * *

(g) Klamath Mountains Province steelhead (*Oncorhynchus mykiss*).

[FR Doc. 95–6459 Filed 3–10–95; 4:47 pm]

BILLING CODE 3510–22–P

---

50 CFR Part 649

[Docket No. 950224059–5059–01; I.D. 011195C]

RIN 0648–AH36

American Lobster Fishery; Framework Adjustment 2

AGENCY: National Marine Fisheries Service (NMFS), National Oceanic and Atmospheric Administration (NOAA), Commerce.

ACTION: Proposed rule; request for comments.

SUMMARY: NMFS proposes measures contained in Framework Adjustment 2 to the American Lobster Fishery Management Plan (FMP). This framework adjustment would change the eligibility requirements for lobster limited access permits to address potentially unequal standards for lobster fishers who reside in different states.

DATES: Comments on the proposed rule must be received on or before March 30, 1995.

ADDRESSES: Comments on the proposed rule, Framework Adjustment 2, or supporting documents should be sent to Jon Rittgers, Acting Regional Director, National Marine Fisheries Service, Northeast Regional Office, 1 Blackburn Drive, Gloucester, MA 01930. Mark the outside of the envelope ''Comments on Lobster Framework 2.''

Copies of Amendment 5 to the FMP, including the regulatory impact review (RIR), initial regulatory flexibility analysis (IRFA), and final supplemental environmental impact statement (FSEIS) are available from Douglas Marshall, Executive Director, New England Fishery Management Council, 5 Broadway, Saugus, MA 01906–1097.

FOR FURTHER INFORMATION CONTACT: Paul H. Jones, Fishery Policy Analyst, 508–281–9273.

SUPPLEMENTARY INFORMATION:

Background

Currently, eligibility for a Federal lobster limited access permit can be established with a vessel's or a person's state permit history (59 FR 31938, June 21, 1994). Because the various states have not had uniform permitting systems, potentially unequal eligibility criteria were inadvertently created for lobster fishers who reside in different states.

To qualify for a limited access American lobster permit, which may be issued only to a vessel, the vessel or vessel owner must have been issued a Federal American lobster permit, or a federally endorsed state lobster permit, and must have landed American lobster prior to March 25, 1991. Because this rule would change the qualification criteria for obtaining a limited access American lobster permit for 1995, it would also change the dates by which vessel owners are required to obtain permits. In states with Federal endorsement programs, such as Maine, fishers who did not own a lobster vessel could use their state permit to qualify for a Federal limited access permit; however, in other states lacking a Federal lobster permit endorsement program, such as Rhode Island, fishers who did not own a lobster vessel and thus had no state permit could not qualify for a Federal limited access permit. For example, a person serving as a crew member in Maine could potentially qualify for a Federal limited access permit, whereas a person employed in the same job on a lobster boat licensed by Rhode Island could not be eligible. Such a result could violate the Magnuson Fishery Conservation and Management Act, 16 U.S.C. § 1801 *et seq.*, which prohibits, among other things, discrimination between residents of different states.

This proposed action would eliminate the potentially unequal eligibility criteria for lobster fishers residing or fishing in different states. In order to obtain a Federal limited access lobster permit, all permit applicants who base their eligibility on a federally endorsed state license would be required to demonstrate that they owned a boat and used it to land lobsters during the qualification period. These applicants would be required to show proof of ownership of a fishing vessel and of having landed lobsters from that vessel prior to March 25, 1991.

Sections of the current regulations dealing with transferability of permit eligibility are written from the perspective of Federal permits issued to vessels. As a result, the regulations are not directly applicable to the transfer of eligibility based on federally endorsed state lobster permits that are issued to individuals. To be consistent with the transferability of eligibility associated with federally permitted vessels, this rule proposes regulatory language at § 649.4(b)(1)(i)(B)(*2*) and (b)(3)(ii) to clarify that eligibility based on a federally endorsed state lobster permit can be transferred with the sale of a vessel after March 25, 1991, if the intent to transfer such rights is verified by credible written evidence.

This adjustment is proposed through the framework process (§ 649.43) and is within the scope of analyses contained in Amendment 5 and the FSEIS. Supplemental rationale and analyses of expected biological effects, economic impacts, impacts on employment, and safety concerns are contained within the supporting documents for Framework Adjustment 2 **(see ADDRESSES)**.

The New England Fishery Management Council (Council) followed the framework procedure codified in 50 CFR part 649, subpart C, when making adjustments to the FMP, by developing and analyzing the actions at two Council meetings, on September 21–22 and October 28–29, 1994. However, because this action was initiated at the first of these meetings without adequate notice to the public, the Council recommended that NMFS publish the measures contained in Framework Adjustment 2 as a proposed rule to ensure that the public is afforded sufficient prior notice and an opportunity for comment.

In accordance with the regulations, public comments on the framework adjustment were solicited by the Council during its September 21–22 and October 28–29, 1994, meetings. No comments were received on the proposed adjustment.

This rule also proposes several minor modifications to §§ 649.4(p) and (q) to ease the public's administrative burden and to conform the requirement to the Council's recommendation.

Classification

This proposed rule has been determined to be not significant for purposes of E.O. 12866.

The Assistant General Counsel for Legislation and Regulation, Department of Commerce has certified to the Chief

Counsel for Advocacy, Small Business Administration, that this proposed rule, if promulgated in final, would not affect a substantial number of small entities. The proposed rule will affect only those fishers who base their application for a Federal limited access lobster permit on a federally endorsed state permit and who purchased a boat since the March 25, 1991, control date. The analysis concludes that no more than 13.6 percent of the total number of fishers meet both criteria. It is not possible to know how many, if any, of these fishers will actually apply for a permit. As a result, a Regulatory Flexibility Analysis was not prepared.

List of Subjects in 50 CFR Part 649

Fisheries, Reporting and recordkeeping requirements.

Dated: March 10, 1995.

Gary Matlock,

Program Management Officer, National Marine Fisheries Service.

For the reasons set out in the preamble, 50 CFR part 649 is proposed to be amended as follows:

PART 649—AMERICAN LOBSTER FISHERY

1. The authority citation for part 649 continues to read as follows:

Authority: 16 U.S.C. 1801 *et seq.*

2. In § 649.4, the first sentence of paragraph (a)(1), the first sentence of paragraph (b) introductory text, and paragraphs (b)(1)(i), (b)(2)(i), (b)(3), (p), and (q) are revised; and paragraph (b)(2)(iii) is added to read as follows:

§ 649.4 Vessel permits.

(a) * * *

(1) Through April 30, 1995, any vessel of the United States fishing for American lobster in the EEZ must have been issued and carry onboard a valid permit required by or issued under this part. * * *

(b) * * * From May 1, 1995, through December 31, 1999, any vessel of the United States that fishes for, possesses, or lands American lobster in or harvested from the EEZ must have been issued and carry onboard a valid Federal limited access American lobster permit. * * *

(1) * * *

(i) To be eligible for a limited access permit for 1995, a vessel or the permit applicant must meet one of the following criteria:

(A) The vessel was issued a Federal American lobster permit and landed American lobster while in possession of the lobster permit prior to March 25, 1991; or

(B) *Either*: (*1*) The permit applicant was issued a federally endorsed state American lobster permit, and landed American lobster prior to March 25, 1991, and owned a vessel that landed American lobster while in possession of the lobster permit prior to March 25, 1991; or

(*2*) The vessel was owned by a person who landed lobster prior to March 25, 1991, while in possession of a valid federally endorsed state American lobster permit, and the vessel was transferred to the current vessel owner in accordance with the exception to the presumption specified in paragraph (b)(3)(ii) of this section; or

(C) The permit applicant owned a vessel that was under written agreement for construction or for re-rigging for directed American lobster fishing as of March 25, 1991, and the vessel was issued a Federal American lobster permit, or the vessel applicant was issued a federally endorsed state American lobster permit, prior to March 25, 1992, and the vessel landed lobster while in possession of that permit; or

(D) The vessel is replacing a vessel that meets any of the criteria set forth in paragraphs (b)(1)(i)(A), (B), (C), or (D) of this section.

* * * * *

(2) * * *

(i) To be eligible to renew or apply for a limited access lobster permit after 1995, a vessel or permit applicant must have been issued either a limited access lobster permit or a confirmation of permit history for the preceding year, or a vessel must be assuming a valid limited access American lobster permit or permit history confirmation from the preceding year. If more than one applicant claims eligibility to apply for a limited access American lobster permit based on one fishing and permit history, the Regional Director shall determine who is entitled to qualify for the limited access permit or permit history confirmation.

* * * * *

(iii) A limited access American lobster permit for 1996 will not be issued unless an application for such permit is received by the Regional Director on or before December 31, 1996.

(3) *Change in ownership*. (i) The fishing and permit history of a vessel that qualifies under paragraphs (b)(1)(i)(A) and (C) of this section is presumed to transfer with the vessel whenever it is bought, sold or otherwise transferred, unless there is a written agreement, signed by the transferor/seller and transferee/buyer, or other credible written evidence, verifying that the transferor/seller is retaining the vessel fishing and permit history for purposes of replacing the vessel.

(ii) The fishing and permit history of a vessel owner and a vessel that qualifies under paragraphs (b)(1)(i)(B) and (C) of this section is presumed to remain with such owner for any transfers of the vessel before and including March 25, 1991; and for any transfers of ownership of the vessel after March 25, 1991, the fishing and permit history necessary to qualify for a limited access lobster permit under paragraphs (b)(1)(i)(B) and (C) of this section is presumed to remain with the last owner of the vessel as of or prior to March 25, 1991, unless there is a written agreement, signed by the transferor/seller and transferee/buyer, or other credible written evidence, verifying that the transferor/seller is transferring the fishing and permit history of a vessel necessary to qualify for a limited access lobster permit under paragraph (b)(1)(i)(B) of this section to the transferee/buyer.

* * * * *

(p) *Limited access American lobster permit renewal*. To apply for a limited access American lobster permit in 1995, a completed application must be received by the Regional Director by December 31, 1995. Failure to renew a limited access American lobster permit or confirmation of permit history in any year bars the renewal of such in subsequent years.

(q) *Abandonment or voluntary relinquishment of limited access American lobster permits*. If a vessel's limited access American lobster permit or confirmation of permit history is voluntarily relinquished to the Regional Director, or abandoned through failure to renew or otherwise, no limited access American lobster permit or confirmation of permit history may be re-issued or renewed based on that vessel's history, or to any vessel relying on that vessel's history.

[FR Doc. 95–6451 Filed 3–15–95; 8:45 am]

BILLING CODE 3510–22–F

Notices

Federal Register
Vol. 60, No. 51
Thursday, March 16, 1995

This section of the FEDERAL REGISTER contains documents other than rules or proposed rules that are applicable to the public. Notices of hearings and investigations, committee meetings, agency decisions and rulings, delegations of authority, filing of petitions and applications and agency statements of organization and functions are examples of documents appearing in this section.

DEPARTMENT OF AGRICULTURE

Natural Resources Conservation Service

Bear Creek Watershed, Jackson County, Oregon

AGENCY: Natural Resources Conservation Service, USDA.

ACTION: Notice of Intent to Prepare an Environmental Impact Statement.

SUMMARY: Pursuant Section 102(2)(C) of the National Environmental Policy Act of 1969; the Council on Environmental Quality Guidelines (40 CFR Part 1500); the Natural Resources Conservation Service Guidelines (7 CFR Part 650); the Natural Resources Conservation Service, U.S. Department of Agriculture, gives notice that an environmental impact statement is being prepared for Bear Creek Watershed, Jackson County, Oregon.

FOR FURTHER INFORMATION CONTACT: Bob Graham, State Conservationist, Natural Resources Conservation Service, 101 SW Main St., Suite 1300, Portland, Oregon 97204–3221, telephone (503) 414–3201.

SUPPLEMENTARY INFORMATION: The environmental assessment of this federally assisted action indicates that the project may cause significant local, regional or national impacts on the environment. As a result of these findings, Bob Graham, State Conservationist, has determined that the preparation and review of an environmental impact statement is needed for this project.

The project concerns a plan for improved agricultural water management on irrigated lands to rectify water quality problems including fishery habitat, and for improved watershed protection. Alternatives under consideration to reach these objectives include conservation land treatment and improved water delivery systems for agricultural water management and fisheries enhancement.

A draft environmental impact statement will be prepared and circulated for review by agencies and the public. The Natural Resources Conservation Service invites participation and consultation of agencies and individuals that have special expertise, legal jurisdiction, or interest in the preparation of the draft environmental impact statement. A meeting will be held as 8:00 am, Thursday, March 30, 1995, at the Red Lion Inn, 200 North Riverside, Medford, Oregon, to determine scope of the evaluation of the proposed action. Further information may be obtained from Bob Graham, State Conservationist, at the above address or telephone (503) 414–3201.

(This activity is listed in the Catalogue of Federal Domestic Assistance under No. 10.904-Watershed Protection and Flood Prevention-and is subject to the provisions of Executive Order 12372 which requires intergovernmental consultation with state and local officials.)

Dated: March 6, 1995.

Bob Graham,
State Conservationist.

[FR Doc. 95–6500 Filed 3–15–95; 8:45 am]

BILLING CODE 3210–16–M

Forms Under Review by Office of Management and Budget

March 10, 1995.

The Department of Agriculture has submitted to OMB for review the following proposal for the collection of information under the provisions of the Paperwork Reduction Act (44 U.S.C. Chapter 35) since the last list was published. This list is grouped into new proposals, revisions, extension, or reinstatements. Each entry contains the following information:

(1) Agency proposing the information collection; (2) Title the information collection; (3) Form number(s), if applicable; (4) Who will be required or asked to report; (5) An estimate of the number of responses; (6) An estimate of the total number of hours needed to provide the information; (7) Name and telephone number of the agency contact person.

Questions about the items in the listing should be directed to the agency person named at the end of each entry. Copies of the proposed forms and supporting documents may be obtained from: Department Clearance Officer, USDA, OIRM, Room 404–W Admin. Bldg., Washington, D.C. 20250, (202) 690–2118.

Revision

- National Agricultural Statistics Service

Fruits, Nuts, and Specialty Crops
Business or other for-profit; Farms; 50,183 responses; 14,764 hours
Larry Gambrell (202) 720–5778

Extension

- Forest Service

Landownership Adjustments (35 CFR 254, Subpart A—Land Exchanges)
Individuals or households; Business or other for-profit; Not-for-profit institutions; 298 responses; 596 hours
Mike Williams (202) 205–1347

- Forest Service

Application for Permit; Non-Federal Commercial Use of roads
Restricted by Order
FS–7700–40
Business or other for-profit; 2,000 responses; 500 hours
David A. Badger (202) 205–1424

Larry K. Roberson,
Deputy Department Clearance Officer.

[FR Doc. 95–6506 Filed 3–15–95; 8:45 am]

BILLING CODE 3410–01–M

DEPARTMENT OF COMMERCE

International Trade Administration

[A–549–810]

Notice of Final Determination of Sales at Less Than Fair Value and Final Negative Critical Circumstances Determination: Disposable Pocket Lighters From Thailand

AGENCY: Import Administration, International Trade Administration, Department of Commerce.

EFFECTIVE DATE: March 16, 1995.

FOR FURTHER INFORMATION CONTACT: David Boyland or Susan Strumbel, Office of Countervailing Investigations, Import Administration, International Trade Administration, U.S. Department of Commerce, 14th Street and Constitution Avenue, NW, Washington, D.C. 20230; telephone (202) 482–4198 and 482–1442, respectively.

Final Determination

We determine that disposable pocket lighters from Thailand are being, or are

likely to be, sold in the United States at less than fair value, as provided in section 733 of the Tariff Act of 1930 (the ''Act''), as amended. The estimated margins of sales at less than fair value are shown in the ''Suspension of Liquidation'' section of this notice.

Case History

Since the October 24, 1994 preliminary determination (59 FR 53414 (October 24, 1994)), the following events have occurred:

Between October 24 and October 28, 1994, we conducted verification of the questionnaire responses. On October 31, 1994, petitioner requested a public hearing. Respondent requested that the Department postpone its final determination in this investigation on November 2, 1994. On November 16, 1994, the Department published its notice of postponement of the final determination (59 FR 59211).

On February 1, 1995, petitioner filed a critical circumstances allegation. The Department issued a preliminary negative critical circumstances determination on March 3, 1994.

On February 13 and February 21, 1995, petitioner and respondent filed case and rebuttal briefs, respectively. On February 28, 1995, the Department held a public hearing.

Scope of the Investigation

The products covered by this investigation are disposable pocket lighters, whether or not refillable, whose fuel is butane, isobutane, propane, or other liquified hydrocarbon, or a mixture containing any of these, whose vapor pressure at 75 degrees Fahrenheit (24 degrees Celsius) exceeds a gage pressure of 15 pounds per square inch. Non-refillable pocket lighters are imported under subheading 9613.10.0000 of the Harmonized Tariff Schedule of the United States (''HTSUS''). Refillable, disposable pocket lighters would be imported under subheading 9613.20.0000. Although the HTSUS subheadings are provided for convenience and Customs purposes, our written descriptions of the scope of these proceedings are dispositive.

Period of Investigation

The period of investigation (''POI'') is December 1, 1993 through May 31, 1994.

Critical Circumstances

Petitioner alleged that critical circumstances exist with respect to imports of disposable lighters from Thailand. In our determination on March 3, 1995, pursuant to section 733(e)(1) of the Act and 19 CFR 353.16, we analyzed the allegations using the Department's standard methodology.

On March 6, 1995, both petitioner and respondent submitted comments with regard to the Department's preliminary negative critical circumstances determination. In addition to submitting general comments, petitioner also provided Port Import and Export Reporting Services (''P.I.E.R.S.'') data (see, Exhibit C of petitioner's March 6, 1995 submission) in order to show that Thai Merry's shipments have dropped off dramatically since the Department's preliminary affirmative determination of sales at less than fair value (''LTFV''). According to petitioner, the decline in imports of subject merchandise from Thailand subsequent to the post-petition period indicates that critical circumstances exist.

With respect to the additional information supplied by petitioner, we note that the Department's analysis of critical circumstances compared data covering December 1, 1993 through April 30, 1994 (the ''pre-petition period'') with data covering May 1, 1994 through September 30, 1994 (the ''post-petition period''). As noted in the preliminary negative critical circumstances determination, the Department considered the post-petition period to be the first day of the month of initiation through the period immediately prior to the preliminary determination of sales at LTFV. While the data submitted by petitioner show that shipments have declined subsequent to the Department's preliminary LTFV determination, our analysis, and the critical circumstances allegation itself, is based on respondent's actions prior to the preliminary LTFV determination. Accordingly, while we have examined the additional information provided by petitioner, it does not alter our original analysis (see, February 27, 1995 Memorandum to Susan H. Kuhbach, Director, Office of Countervailing Investigations from David R. Boyland, Case Analyst, Office of Countervailing Investigations). In the absence of information that would alter our original analysis, we determine that critical circumstances do not exist.

Class or Kind of Merchandise

The Department considers standard and child-resistant lighters to be one class or kind of merchandise (see, Interested Party Comments, Comment 1).

Product Comparisons

We have continued to treat standard lighters sold in the home market as similar to child-resistant lighters, and identical to standard lighters sold in the United States (see, Interested Party Comments, Comment 2). For the U.S. sales compared to home market sales of similar merchandise, we made an adjustment, pursuant to 19 CFR 353.57, for physical differences in merchandise.

Level of Trade

For the preliminary determination, respondent argued that, since Thai Merry sells to large national distributors in the United States, the home market sales used for comparison purposes should be limited to those sales made to the single national distributor in the home market. The Department, in its preliminary determination, stated that the information submitted by the respondent did not justify distinguishing between the national distributor in the home market and other distributors.

Although the Department gave respondent the opportunity to provide additional information to substantiate its claim that there is a distinct national distributor level of trade in the home market, respondent declined to do so. Moreover, at verification, we learned that respondent's division of customers into either the retail level of trade or the distributor level of trade was based solely on the volume of lighters purchased by home market customers.

The Department analyzes levels of trade based on the differences in functions performed by the seller or differences in the category of customer. In this case, however, respondent based its level of trade claim solely on differences in quantities purchased. Therefore, we have not performed a level of trade analysis.

We note, however, that there are substantial differences in quantities ordered by U.S. and home market customers. Moreover, within the home market, sales are made in a wide range of quantities and with larger quantities being sold at lower prices. In accordance with 19 CFR 353.55, we have identified the largest home market transactions and have compared those with sales to the United States.

Fair Value Comparisons

To determine whether Thai Merry's sales for export to the United States were made at less than fair value, we compared the United States price (''USP'') to the foreign market value (''FMV''), as specified in the ''United States Price'' and ''Foreign Market Value'' sections of this notice.

We made revisions to Thai Merry's reported data, where appropriate, based on verification findings.

United States Price

Because Thai Merry's U.S. sales of disposable pocket lighters were made to unrelated purchasers prior to importation into the United States, and the exporter's sales price methodology was not indicated by other circumstances, in accordance with section 772(b) of the Act, we based USP on the purchase price (''PP'') sales methodology. We calculated Thai Merry's PP sales based on packed, CIF prices to unrelated customers in the United States.

We made deductions to the U.S. price, where appropriate, for foreign inland freight, foreign brokerage/handling expenses, marine insurance, and ocean freight. In calculating the imputed U.S. credit expense, we used the borrowing rate in the United States on short-term dollar-denominated loans (see, Interested Party Comments, Comment 11). For a further discussion of the Department's treatment of U.S. credit expense, please see Memorandum to Barbara R. Stafford, Deputy Assistant Secretary, Investigations from Susan H. Kuhbach, Director, Office of Countervailing Investigations, (September 26, 1994) on file in room B–099 of the U.S. Department of Commerce.

In accordance with Section 772(d)(1)(B) of the Act, we made an addition to the U.S. price for the amount of import duties imposed but not collected on inputs. We also made an adjustment to U.S. price for VAT taxes paid on the comparison sales in Thailand, in accordance with our practice, pursuant to the Court of International Trade (''CIT'') decision in *Federal-Mogul, et al* versus *United States,* 834 F. Sup. 1993. See, Preliminary Antidumping Duty Determination and Postponement of Final Determination; Color Negative Photographic Paper and Chemical Components Thereof from Japan, 59 FR 16177, 16179 (April 6, 1994), for an explanation of this tax methodology.

Foreign Market Value

In order to determine whether there was a sufficient volume of sales in the home market to serve as a viable basis for calculating FMV, we compared the volume of home market sales of subject merchandise to the volume of third country sales of subject merchandise, in accordance with section 773(a)(1)(B) of the Act. As a result, we determined that the home market was viable.

We calculated FMV based on delivered prices, inclusive of packing, to customers in the home market. From the delivered price, we deducted home market packing and added U.S. packing costs.

Pursuant to section 773(a)(4)(B) of the Act and 19 CFR 353.56(a)(2), we made circumstance-of-sale-adjustments for differences in movement charges between shipments to the United States and shipments in the home market. We also made circumstance-of-sale-adjustments for differences in advertising expenses, and direct selling expenses, including payments made by Thai Merry to a third party. With respect to the home market credit expense, we have attributed this expense to only those home market sales identified as ''credit sales.'' Additionally, we note that respondent provided a value-based allocation for advertising expense in its home market sales listing. We have substituted respondent's value-based allocation with a per unit advertising expense for the final determination.

Currency Conversion

We made currency conversions based on the official exchange rates in effect on the dates of the U.S. sales as certified by the Federal Reserve Bank of New York.

Verification

As provided in section 776(b) of the Act, we verified information provided by the respondent using standard verification procedures, including the examination of relevant sales, cost and financial records, and selection of original source documentation used in making our final determination.

Interested Party Comments

Comment 1: Respondent argues that since standard lighters can no longer be imported into the United States because of a Consumer Product Safety Commission (''CPSC'') regulation which came into effect after the POI, standard lighters and child-resistant lighters should be considered two separate classes or kinds of merchandise. In support of its arguments, respondent has outlined differences between standard and child-resistant lighters relevant to the *Diversified Products* criteria (see, *Diversified Product Corporation* versus *United States,* 582 F. Supp. 887 CIT 1983). These differences are summarized as follows: (1) The differences in physical characteristics are minor. However, the fact that child-resistant lighters can be legally imported, while standard lighters cannot, makes these differences significant, according to respondent; (2) with respect to ultimate use, respondent notes that the types of lighters are in fact different since the child-resistant lighter is intended to be used only by persons mature enough to understand the danger associated with the lighter; (3) as regards, expectation of the ultimate purchaser, respondent argues that, while both types of lighters can produce flames with which to light something, the child-resistant lighter is expected to be safer; (4) with respect to channels of trade, respondent notes that once the inventories of standard lighters imported prior to July 12, 1994 have been sold, the channels of trade of the two types of lighters will be distinct because only one will exist legally (child-resistant) while the other will not (standard); (5) as regards advertising and display, respondent argues that child-resistant lighters are marketed as not only disposable lighters, but child-proof products which marketing officials promote as such. Additionally, according to respondent, the CPSC regulation requires that the two types of lighters be displayed differently and that once inventories of standard lighters are sold, they will not be displayed or advertised anywhere; (6) with respect to cost, respondent notes that the cost of producing the child-resistant lighters is legally significant because the additional cost allows the lighters to be exported to the United States. Also, with respect to cost, respondent argues that the price of standard and child-resistant lighters are sharply different.

Petitioner argues that both standard and child-resistant lighters will be sold in competition with one another until the large stockpiled supply of standard lighters imported prior to the CPSC ban is exhausted. Petitioner argues that both lighters are functionally equivalent, their physical characteristics are almost identical, the ultimate use and expectation of the consumer is the same, and that child-resistant and standard lighters are sold through the same channels of distribution, with the same advertising and display. Additionally, petitioner points out that the difference in price between the standard and child-resistant lighter is distorted because standard lighters are being dumped, as admitted in respondent's case brief. Finally, petitioner states that the cost differences between the two types of lighters is insufficient to support a class or kind distinction.

DOC Position: Regarding the class or kind issue, the Department has determined that there is only one class or kind of merchandise.

As regards physical characteristics, all parties agree, and the record supports, that there is no distinct difference between standard and child-resistant lighters. With respect to cost, the

Department has already determined that it can match child-resistant lighters sold in the United States to standard lighters sold in the home market with a difference in merchandise adjustment (''difmer'') (*i.e.*, the difference in variable costs between the child-resistant lighter and the standard lighter does not exceed 20 percent of the total cost of manufacturing of the child-resistant lighter). Therefore, we find that the difference in cost is not significant enough to support a class or kind distinction. With respect to ultimate use, and expectations of the ultimate purchaser, we note that, while child-resistant lighters have a safety feature and the standard lighter does not, the primary function of standard and child-resistant lighters is the same. Additionally, the expectations of the consumer with regard to the utility of child-resistant lighters and standard lighters are the same. Also, regardless of the CPSC ban, standard and child-resistant lighters are sold through the same channels of trade. Finally, while we note that the advertising and display of standard and child-resistant lighters may be marginally different because of the child-safety feature, the differences in advertising and display are minor and do not outweigh the fact that no differences are evident in the other *Diversified Products* criteria, as noted above.

Respondent also argues that the import restriction distinction between the two types of lighters is a ''clear dividing line,'' as that term is used by the Department in Final Affirmative Less Than Fair Value Determination: Sulfur Dyes, Including Vat Sulfur Dyes, from the U.K. (''Sulfur Dyes From the U.K.'') 58 FR 3253 (January 8, 1993)). In Sulfur Dyes From the U.K., the Department stated that ''when examining differences in physical characteristics in the context of class or kind analysis, the Department looks for 'clear dividing lines' between product groups, not merely the presence or absence of physical differences.'' (58 FR at 3254). According to respondent, because standard lighters may no longer be imported, the *Diversified Products* factors vis-a-vis child-resistant lighters are all diametrically different.

Except for the import restriction associated with standard lighters, respondent has provided no compelling reason to divide these products into separate classes or kinds of merchandise. While indicating that a ''clear dividing line'' is necessary to make a class or kind distinction, the Department went on to state in Sulfur Dyes from the U.K. that multiple classes or kinds did not exist because the Department did not find ''clearly defined differences in any of the *Diversified Products* criteria.'' In the instant case, the differences presented by respondent to support its *Diversified Products* analysis, as discussed above, are not compelling. Therefore, we continue to find standard and child-resistant lighters to be one class or kind of merchandise.

With respect to using an average-to-average methodology, we note that, except in the most extraordinary circumstances, the Department's long-standing practice is to compare individual U.S. transactions with a weighted average FMV (see, 19 CFR 353.44(a)).

As to respondent's point that an average-to-average methodology will be required under the new antidumping law, we note that this final determination is being made pursuant to the previous law, which does not require an average-to-average comparison. Finally, with respect to applying a zero margin to child-resistant lighters, we note that the Department applies a dumping margin on the basis of a class or kind of merchandise, not on a product-specific basis (see, section 731 of the Tariff Act of 1930, as amended).

Comment 2: Petitioner objects to the Department's preliminary determination that child-resistant lighters can be compared to home market sales of standard lighters. Petitioner argues that, based on the differences in the cost of manufacture and commercial value, standard and child-resistant lighters should not be considered ''similar.'' According to petitioner, information that it submitted shows that the two types of lighters are not ''approximately equal in commercial value.'' Thus, petitioner argues that the requirements of 19 U.S.C. 1677(16)(B)(iii) have not been met. Instead, the Department improperly relied solely on the physical characteristics of the merchandise in making its preliminary determination. Furthermore, petitioner argues that the commercial value aspect of 19 U.S.C. 1677(16)(b)(iii) is designed for cases such as the instant one in which the differences in overall cost and commercial value result from the mandatory child-safety requirements. Such differences are attributable to capital expenditures for research and development. Petitioner argues that the Department should at least factor in the high cost of developing the safety mechanism when making its such or similar analysis.

Respondent argues that there is no support for using cost in determining whether the two lighters can be considered similar, except to the extent that the Department will generally not compare products where the difmer exceeds 20 percent of the cost of manufacturing of the U.S. product. Moreover, respondent argues that the Department's preliminary determination was consistent with past cases and the CIT's ruling in *United Engineering and Forging* versus *United States*, 779 F. Sup. 1375, 1381 (1991)).

DOC Position: We agree with respondent. The Department places little weight on the commercial value criterion in determining what constitutes such or similar merchandise (see, Final Results of Administrative Review: Certain Forged Steel Crankshafts from the United Kingdom , 56 FR 5975 (February 14, 1991)), and Final Determination of Sales at Less Than Fair Value: Certain Portable Electric Typewriters From Singapore, 58 FR 43334 (August 16, 1993)). Instead, the Department focuses on the similarity of the physical characteristics, as evidenced in the Department's such or similar determination in this investigation. The Department's position in this regard has been upheld by the CIT in *United Engineering.*

In this case, child-resistant and standard lighters closely resemble each other in terms of their physical characteristics. Moreover, while the commercial value of the two products (as reflected in their prices) differed, the difference was not large (in absolute terms) and decreased over time. Therefore, we have continued to find that child-resistant lighters are similar to standard lighters.

Except for our general practice of limiting difmers to those which do not exceed 20 percent of the cost of manufacturing the good sold in the United States, we do not consider cost in determining what constitutes similar merchandise. We note that the alleged research and development costs referred to by petitioner would not be included in the difmer, which includes only variable manufacturing costs.

Comment 3: Petitioner argues that Thai Merry gives quantity discounts, which eliminates the need for a level of trade adjustment. Petitioner also argues that Thai Merry has been unable to determine which home market customers are retailers and which home market customers are distributors, and instead has simply relied on volume sold to distinguish between these levels. Additionally, petitioner notes that Thai Merry has been unable to substantiate its claim that the distributor level of trade should be sub-divided into distinct levels of trade. Thus, according to petitioner, all of Thai Merry's home

market sales should be found to be made at the same level of trade.

Respondent argues that petitioner is incorrect in stating that Thai Merry was unable to identify which customers were retailers or distributors. Respondent argues that the threshold it provided for dividing its customers into the two groups was conservative, *i.e.*, this threshold eliminates home market customers from the Department's LTFV comparison that are clearly not distributors. Additionally, some of those home market customers identified as distributors were in all likelihood retailers. Respondent argues that use of a threshold was necessary given the difficulty in identifying the exact level of trade of every home market customer. Finally, respondent argues that the Department is required to make comparisons at the same level of trade (see, 19 CFR 353.58) and there is a significant dividing line between the quantities purchased by the retail customers in the home market and the quantities purchased by the large national distributors in the United States. Therefore, the Department should rely on sales to home market distributors, as defined by respondent, in making its comparisons to U.S. sales.

DOC Position: While this issue has been framed in the context of level of trade, the Department finds that the appropriate approach is to identify home market sales that are in quantities comparable to U.S. sales. We note that there is no home market customer who orders in quantities approaching the average quantities ordered by U.S. customers. Nevertheless, we examined the data and found that average transaction prices varied with quantity. Therefore, we have selected for comparison purposes large quantity home market transactions (see, March 8, 1995 Memorandum to Barbara R. Stafford, Deputy Assistant Secretary, Investigations from David Boyland, Case Analyst, Office of Countervailing Investigations).

Comment 4: Petitioner argues that the Department's verification report indicates that the U.S. price changed between the purchase order date and the invoice date. As such, petitioner argues that the invoice date should be considered the date of sale.

Respondent argues that the Department's verification report is misleading because, while the invoice date is Thai Merry's first record of the sale price, previously submitted information shows that the price and quantity are recorded at the time of the purchase order. Additionally, respondent argues that the ''revisions'' referred to in the verification report were prospective changes in price, as opposed to price changes to orders already made.

DOC Position: The verification report states that ''during our examination of U.S. sales completeness...the standard and child-safety lighter per-unit prices were applied consistently throughout the POI with several upward price revisions occurring in the latter half of the POI.'' ''Revisions,'' in the context of the verification report, referred to assumed increases in the negotiated price, as opposed to a change in price between the purchase order date and the invoice date.

The verification report also states that the first ''written'' record generated by Thai Merry of the negotiated price is the invoice. While respondent has cited to a Purchasing and Payment Records spreadsheet maintained by U.S. customers, this information does not by itself prove when the purchase price was first recorded. The spreadsheet includes Thai Merry's invoice number and hence was generated sometime after Thai Merry's invoice information, including unit price, was available to the U.S. customer. Therefore, it is not correct to say, as respondent claims, that this information proves the price was recorded at the time of the purchase order.

Given the fact that respondent's price negotiations with its U.S. customers were unrecorded, it was not possible to ''verify'' that the purchase order date was the date on which both price and quantity were fixed. The information provided by respondent indicates that it is reasonable to assume that the price was established prior to the purchase order and that the purchase order established the quantity. However, as the Department noted in Certain Stainless Steel Butt-Weld Pipe and Tube Fittings From Japan; Final Results of Antidumping Duty Administrative Review, 59 FR 12240, 12241 (March 16, 1994)), the date of sale is evidenced by the ''first document which systematically records agreement as to price and quantities * * * [m]oreover the invoice date represents an accurate, reasonable, consistent methodology to determine the date of sale.'' In this case, the appropriate date of sale is the invoice date because it is the first written record generated by Thai Merry of both price and quantity. Additionally, this date was subject to verification during our examination of the U.S. sales listing.

Comment 5: With respect to certain sales at the end of the POI, respondent argues that a fire at one of Thai Merry's facilities made it impossible to fill the entire May 15, 1994 purchase order. According to a May 26, 1994 letter from the U.S. customer to Thai Merry, the customer notified Thai Merry of a certain volume of lighters that would be accepted for shipment. Respondent argues that the amount of child-resistant lighters ultimately shipped pursuant to both the May 15, 1994 purchase orders and the June 15, 1994 purchase orders matched the volume accepted by the U.S. customer in the May 26, 1994 letter to Thai Merry. Accordingly, since these shipments were accepted during the POI (*i.e.*, May 26, 1994), the sales reflected in the June 15, 1994 purchase orders should be considered POI sales. In response to the Department's verification report, which indicates that the unfilled portion of the May 15, 1994 purchase order was not accounted for in the subsequent June 15, 1994 purchase orders, respondent argues that this is due to the fact that standard lighters ordered on May 15, 1994, could not be re-ordered because of the pending CPSC ban.

Petitioner argues that respondent's explanation should be rejected because (1) the terms of the purchase could be changed up to the invoice date, (2) there is no clearly established connection between the June 15 and May 15 purchase orders, and (3) the May 26, 1994 letter discusses a forthcoming purchase order which was not found to exist.

DOC Position: As noted in Comment 5, the Department is considering the invoice date to be the date of sale. Accordingly, only those sales invoiced during the POI will be considered POI sales for purposes of the final determination.

Comment 6: Petitioner argues that sales by Thai Merry Hong Kong (''TMHK'') to the United States should be included in the Department's LTFV comparison. Petitioner notes that the factors the Department considers when determining if the sales of two parties should be collapsed include: (1) whether the companies are closely intertwined; (2) whether transactions take place between the companies; (3) whether the companies have similar types of production equipment, such that it would be unnecessary to retool either plant's facilities before implementing a decision to restructure either company's manufacturing facilities; and (4) whether the companies involved are capable, through their sales and production operations, of manipulating prices or affecting production decisions (see, Final Determination of Sales at Less Than Fair Value: Certain Granite Products from Italy, 53 FR 27187 (July 19, 1988)). Petitioner argues that the

longstanding business relationship and the continued use of the Thai Merry name indicate that the relationship between the two companies did not end subsequent to Thai Merry's gradual sale of its ownership interest in TMHK. Petitioner argues that the relatedness issue is only one prong in the test used by the Department in determining whether to collapse sales. When the preceding factors are combined with the fact that the two companies are capable of price manipulation, it is clear that TMHK's sales to the United States should be included in the calculation of FMV. Petitioner argues that this potential to manipulate prices is the primary factor in determining whether TMHK's sales should be included in FMV and that the facts in this case show that there was price manipulation.

Respondent argues that section 771(13) of the Tariff Act of 1930, 19 U.S.C. 1677(13), governs the determination of ''related parties.'' Under this section of the statute, the Department has established a test under which parties will not be considered related unless ownership is greater than five percent. Respondent argues that since Thai Merry has no ownership interest in TMHK, as shown at verification, the two parties are not related. Respondent also argues that the evidence provided by petitioner for collapsing the two parties is unconvincing because: (1) The similarity in names between Thai Merry and TMHK is merely cosmetic, and in fact TMHK has changed its name, (2) buyers and sellers typically have frequent business transactions, and (3) the price TMHK charged Thai Merry's U.S. customer is not unusual because unrelated parties often sell similar products for similar prices.

DOC Position: We note that the Department only collapses sales under section 773(13) of the statute if the parties are related. Since Thai Merry has no ownership interest in TMHK, the Department has not considered TMHK's sales to the United States for purposes of calculating the margin.

Comment 7: Petitioner argues that because of the nature of payments by Thai Merry to Thai Merry America (''TMA'') (*i.e.*, a specific amount based on each U.S. sale), and because of the type of assistance being provided by TMA (*i.e.*, production consulting, research and development), the payments to TMA should be treated as a direct selling expense. Petitioner argues that the payments to TMA were, in part, for research and development for the child safety lighter. Thus, the payments to TMA were tied to the sale of a specific product line. According to petitioner, the other assistance provided by TMA, for example, production management, can also be tied directly to the sale of child-resistant and standard lighters because, in the absence of this assistance and the costs associated with them, these products would not have been manufactured. Finally, petitioner argues that it is precisely because these payments are directly tied to U.S. sales that a circumstance-of-sale adjustment is necessary.

Respondent argues that the TMA payments, as characterized by petitioner, indicate that these payments were related to production, as opposed to sales. While these payments resemble commissions, they are actually G&A expenses that do not qualify for a circumstance of sale adjustment.

DOC Position: Before determining how to treat this payment, we examined the payment arrangement between Thai Merry and TMA. Under this arrangement Thai Merry's ultimate payment to TMA is based on total U.S. sales. The services provided by TMA consist of production consulting, research and development, and market research. Because the payments to TMA are not connected with sales activity in the United States, we do not view them as commissions. However, since the payments to TMA are based on each U.S. sale, and calculated as a percentage of each U.S. sale, we consider these payments to be a direct U.S. selling expense. As a consequence, for purposes of the final determination, we have added these payments to FMV.

Comment 8: Respondent argues that the incentive bonuses paid to home market salesmen were not commissions. According to respondent, this is because these payments are not tied to the number or value of sales. Respondent argues that this is evidenced by the fact that Chamber (the home market selling arm of Thai Merry) does not keep records of sales per salesperson. Additionally, respondent notes that there is no correlation between the amount of incentive bonus paid and the value of sales during the previous month; *i.e.*, if the bonus was in fact a commission based on the value of sales, one would expect that when the value of sales dropped the subsequent amount of incentive bonuses paid would also drop. This was not the case.

DOC Position: Based on our review of the information, we see no correlation between home market sales and the ''incentive bonuses'' paid to Chamber's salesmen. The absence of an observable correlation or relationship between sales and incentive bonuses supports respondent's claim that these payments are not commissions. Therefore, for the final determination, we have determined that these payments are not commissions.

Comment 9: Petitioner argues that for the final determination the Department should apply the credit expense to only those home market sales identified as ''credit sales.''

DOC Position: We agree and have made this correction.

Comment 10: Petitioner argues that the home market freight expense should have been allocated on a weight or per-unit basis, instead of using a value-based factor. Given customary freight rate structures, it is unreasonable, according to petitioner, to allocate freight expenses based on the value of subject merchandise. Finally, given respondent's refusal to cooperate in providing a non-value-based freight amount, as well the Department's preference for not including depreciation as part of the freight expense, the Department should use the per-unit freight cost incurred by Thai Merry on direct sales shipped in the home market, as best information available (''BIA'').

Respondent argues that it was not possible to provide a weight-based or per-unit cost for home market inland freight because home market deliveries include subject and non-subject merchandise. Hence, there is no common denominator with which to perform an allocation of cost. Additionally, a weight-based calculation is not possible because records are not kept with respect to total weight shipped. Respondent also argues that there have been cases in which the Department has accepted a value-based allocation (see, Antifriction Bearing (Other than Tapered Roller Bearings) and Parts Thereof from France, Germany, Italy, Japan, Romania, Singapore, Sweden, Thailand and the United Kingdom, 58 FR 39729 (July 26, 1993)).

DOC Position: We agree with respondent. The Department verified elements of respondent's value-based freight allocation. This allocation incorporated expenses, including depreciation, which were directly related to Chamber's transportation costs. The allocation involved the appropriate costs and therefore appeared to be reasonable. As such, we have continued to use a value-based factor for the final determination.

Comment 11: Petitioner argues that, in this case, the use of a U.S. interest rate to calculate the U.S. credit expense does not represent ''commercial reality.'' According to petitioner, since Thai Merry has no loans in U.S. dollars and, therefore, finances all of its operations

in Thai baht, the actual credit expense to Thai Merry is a home market borrowing expense. Petitioner argues that, if the Department must use a U.S. interest rate, it should at least impute a credit expense based on a Thai interest rate for the ''time on the water'' period between shipment date and payment date.

Respondent argues that, with respect to the U.S. credit expense calculated at the preliminary determination, the Department correctly interpreted *LMI–LA Metalli Industriale, S.p.A.* v. *United States,* 912 F. 2d. 455, 460 (Fed. Cir. 1990)) (''*LMI*''). Respondent argues that *LMI* was not a fact-specific decision in which the respondent company's dollar loans justified the use of a U.S. dollar interest rate. Rather, according to respondent, the Court focused on the availability of a lower borrowing rate. Respondent argues that the Department reasonably found the borrowing rate to be based on the currency of sale at the preliminary determination and should continue to use a dollar interest rate for the final determination.

DOC Position: While Thai Merry had liabilities denominated solely in baht, some of its assets (*e.g.,* receivables pursuant to U.S. sales) were denominated in dollars. As such, the cost to Thai Merry is the cost it would incur in discounting a dollar receivable which would be based on a dollar interest rate.

Because we believe that our original decision was correct and is supported by *LMI,* we have continued to use a U.S. dollar interest rate to calculate the U.S. credit expense.

Comment 12: Respondent argues that the methodology employed by the Department at the preliminary determination, while consistent with the decision in *Federal-Mogul, et. al.* v. *United States,* (''*Federal Mogul*'') 834 F. Supp. 1391 (CIT)), is inconsistent with the expectation of tax neutrality under GATT and ignores the methodology sanctioned by a higher court, the U.S. Court of Appeals for the Federal Circuit (see, *Zenith Corp.* v. *United States,* (''*Zenith*'') 988 F.2d 1573, 1583 n.4 (Fed. Cir, 1993) which stated that it was appropriate for the Department to adjust U.S. price by the amount of VAT actually paid on home market sales. Because the adjustments pursuant to *Federal Mogul* exaggerate existing margins, the use of this methodology is in violation of GATT. Respondent cites Article VI(1) and Article VI(4) of the GATT and Article 2(6) of the Agreement on Implementation of Article VI of the GATT, as unambiguously requiring that differences in the level of indirect taxes shall not create/inflate dumping margins. Petitioner argues that respondent's reliance on footnote 4 of *Zenith* is incorrect because the Court of International Trade found that ''footnote 4 (*of Zenith*) is clearly at odds with Zenith and the language of the statute and is *dicta.*'' Petitioner states that in *Avesta Sheffield, Inc. et. al.* v. *United States,* Slip Op. 93–217 (CIT Nov. 18, 1993) the court also found footnote 4 of *Zenith* to be *dicta.* Additionally, with respect to respondent's argument that the Department's VAT methodology is in conflict with Article VI(4) of GATT, petitioner argues that under a proper interpretation of this article, in which a multiplier effect only occurs in the presence of a dumping margin, the Department's methodology fully comports with GATT.

DOC Position: We agree with petitioner. The VAT methodology used at the preliminary determination has been used by the Department for all recent antidumping determinations and is in accordance with both the statute and the GATT. Accordingly, for the final determination we have continued to use the VAT methodology used for the preliminary determination (see, Preliminary Antidumping Duty Determination and Postponement of Final Determination; Color Negative Photographic Paper and Chemical Components Thereof from Japan, 59 FR 16177, 16179, (April 6, 1994)).

Comment 13: Petitioner states that it is not clear whether the Department verified that all of Thai Merry's advertising expenses were related to lighter sales. Additionally, it is also not clear, according to petitioner, whether Thai Merry's general ledger distinguishes between advertising for lighters and advertising for scouring pads. Petitioner notes that only advertising expenses associated with the sale of disposable lighters should be used to adjust the FMV.

Respondent argues that the Department examined Thai Merry's advertising expense adjustment and found no indication that the company incurs advertising expense for anything other than the sale of lighters. Accordingly, the Department should utilize the verified figure for home market advertising expenses in the final determination.

DOC Position: We agree with respondent. During our verification of Thai Merry's advertising expenses, we noted no information indicating that Thai Merry paid for any advertising other than advertising for lighters. Accordingly, we have used the advertising expense, as verified, for the final determination.

Comment 15: Petitioner argues that sales of imprinted and non-imprinted Aladdin lighters, as well as wrapped lighters, should be used in the calculation of FMV without a difmer adjustment because the physical differences between these lighters and standard lighters are minor. According to petitioner, respondent's argument that wrapped and imprinted lighters should not be used in the FMV calculation because there are no U.S. sales of such lighters is dubious since respondent has already argued that standard and child-resistant lighters are one such or similar category.

Respondent argues that it is a basic tenet of the antidumping law that U.S. sales should be matched to identical sales in the home market or, if an identical product is unavailable, the most similar home market product should be compared to the U.S. sale. At verification, respondent was able to identify home market sales of imprinted and non-imprinted Aladdin lighters, as well as wrapped lighters. Since imprinted and wrapped lighters are neither identical nor most similar to U.S. sales, they should be excluded from the Department's LTFV comparison.

DOC Position: We agree with respondent. Petitioner seems to argue that imprinted and wrapped lighters sold in the home market should be matched to non-imprinted, non-wrapped lighters sold in the U.S. This is in spite of the fact that merchandise which is identical to the merchandise sold in the U.S. is being sold in the home market. While imprinted and wrapped lighters are within the same such or similar category, they are not identical or most similar to the merchandise sold in the United States. Therefore, we have excluded imprinted and wrapped lighters from the calculation of FMV for the final determination.

Comment 16: Petitioner argues that the Department should find critical circumstances to exist. According to petitioner, when May 1994 shipments are excluded (*i.e.,* the period which the Department referred to as a unique ''spike''), Thai Merry's post-petition shipments increased by an amount that can still be considered massive under 19 CFR 353.16(f)(2). Petitioner argues that critical circumstance should be found to exist since the Department focused on the effect of the CPSC ban, and that removing this period for comparison purposes still yields a post-petition period increase which is ''massive.'' Additionally, because it received notification of the Department's preliminary negative critical

circumstances determination after close of business (''COB'') on March 3, 1995 and the deadline for submitting comments to the determination was March 6, 1995, petitioner indicates that it was not allotted ''sufficient time'' to comment on the Department's analysis.

Respondent states that, while the Department could have based its negative preliminary critical circumstances determination on factors other than the CPSC ban and its effect on shipments, the Department correctly found that critical circumstances do not exist.

DOC Position: We first note that the Department's preliminary negative critical circumstance determination was not based solely on the effect of the CPSC ban on Thai Merry's shipments during the post-petition period. In making the negative preliminary critical circumstances determination, the Department stated that its decision was ''[b]ased on (1) an evaluation of apparent domestic consumption during the pre- and post-petition period, as calculated by petitioner, (2) Thai Merry's share of domestic consumption during the pre- and post-petition periods, (3) the shipment data provided by respondent as compared to previous periods, and (4) consideration of the circumstances surrounding the large increase in shipment in May 1994 * * *'' (see, page 7 of unpublished version of the Department's March 3, 1995 preliminary negative critical circumstances **Federal Register** notice). Because no additional information has been provided by petitioner that conflicts with our preliminary determination, we continue to find that critical circumstances do not exist.

With regard to petitioner's claim that it did not have sufficient time to analyze the Department's preliminary negative critical circumstances determination, we note that petitioner did not request additional information under administrative protective order (''APO'') (*i.e.*, the Department's February 27, 1995 analysis memo) with which to make its analysis until late in the afternoon of March 6, 1995 (*i.e.*, the deadline date). Additionally, we note that on March 6, 1995, the Department offered petitioner an extension for filing comments on the preliminary negative critical circumstances determination if requested. Petitioner specifically declined to make an extension request (see, March 7, 1995 memo to case file from David R. Boyland, Case Analyst, Office of Countervailing Investigations).

Continuation of Suspension of Liquidation

We are directing the Customs Service to continue to suspend liquidation of all entries of disposable lighters, that are entered, or withdrawn from warehouse, for consumption on or after October 24, 1994, the date of publication of our affirmative determination in the **Federal Register**. The Customs Service shall require a cash deposit or the posting of a bond equal to the estimated amount by which the FMV of the merchandise of this investigation exceeds the USP, as shown below. This suspension of liquidation will remain in effect until further notice. The weighted-average dumping margins are as follows:

Producer/manufacturer/exporter	Weighted-average margin percentage
Thai Merry	25.04
All Others	25.04

International Trade Commission (ITC) Notification

In accordance with section 735(d) of the Act, we have notified the ITC of our determination. The ITC will now determine, within 45 days, whether these imports are materially injuring, or threatening material injury to the U.S. industry. If the ITC determines that material injury, or threat of material injury, does not exist, the proceeding will be terminated and all securities posted will be refunded or cancelled. If the ITC determines that such injury does exist, the Department will issue an antidumping order directing Customs officials to assess antidumping duties on all imports of the subject merchandise entered, or withdrawn from warehouse, for consumption on or after the effective date of the suspension of liquidation.

Notification to Interested Parties

This notice also serves as the only reminder to parties of their responsibility concerning the return or destruction of proprietary information disclosed under APO in accordance with 19 CFR 353.34(d). Failure to comply is a violation of the APO.

This determination is published pursuant to section 735(d) of the Act and 19 CFR 353.20(a)(4).

Dated: March 8, 1995.

Susan G. Esserman,

Assistant Secretary for Import Administration.

[FR Doc. 95–6523 Filed 3–15–95; 8:45 am]

BILLING CODE 3510–DS–P

National Oceanic and Atmospheric Administration

[I.D. 030795B]

Marine Mammals

AGENCY: National Marine Fisheries Service (NMFS), National Oceanic and Atmospheric Administration (NOAA), Commerce.

ACTION: Receipt of application for a scientific research permit (P418A).

SUMMARY: Notice is hereby given that Mason Weinrich of the Cetacean Research Unit, P.O. Box 159, Gloucester, MA 01930, has applied in due form for a permit to take humpback whales (*Megaptera novaeangliae*), fin whales (*Balaenoptera physalus*), right whales (*Eubalaena glacialis*), and sei whales (*Balaenoptera borealis*) for the purpose of scientific research.

DATES: Written comments must be received on or before April 17, 1995.

ADDRESSES: The application and related documents are available for review upon written request or by appointment in the following offices:

Permits Division, Office of Protected Resources, NMFS, 1315 East-West Highway, Room 13130, Silver Spring, MD 20910, (301/713–2289);

Director, Northeast Region, NMFS, One Blackburn Drive, Gloucester, MA 01930–2298 (508/281–9250).

Written data or views, or requests for a public hearing on this request, should be submitted to the Chief, Permits Division, F/PR1, Office of Protected Resources, 1335 East-West Highway, Silver Spring, MD 20910, within 30 days of the publication of this notice. Those individuals requesting a hearing should set forth the specific reasons why a hearing on this particular request would be appropriate.

Concurrent with the publication of this notice in the **Federal Register**, the Secretary of Commerce is forwarding copies of this application to the Marine Mammal Commission and its Committee of Scientific Advisors.

SUPPLEMENTARY INFORMATION: The subject permit is requested under the authority of the Marine Mammal Protection Act of 1972, as amended (16 U.S.C. 1361 *et seq.*), the Regulations Governing the Taking and Importing of Marine Mammals (50 CFR part 216), the Endangered Species Act of 1973, as amended (16 U.S.C. 1531 *et seq.*), and the Regulations Governing the Taking, Importing, and Exporting of Endangered Fish and Wildlife (50 CFR part 222).

The applicant seeks authorization to take annually by harassment a maximum of 400 individual humpback

whales, 250 individual fin whales, 50 individual sei whales, and 50 individual right whales in the Western North Atlantic. Proposed taking will be by close approach (within 100 yards) for photo-identification to continue long-term studies of distribution, demography, behavior, and ecology of the cetaceans inhabiting the Northeastern coastal waters of the United States.

Dated: March 10, 1995.

Art Jeffers,

Acting Chief, Permits & Documentation Division, National Marine Fisheries Service.

[FR Doc. 95–6460 Filed 3–15–95; 8:45 am]

BILLING CODE 3510–22–F

[I.D. 030795A]

Marine Mammals

AGENCY: National Marine Fisheries Service (NMFS), National Oceanic and Atmospheric Administration (NOAA), Commerce.

ACTION: Receipt of application for a scientific research permit (P773#54).

SUMMARY: Notice is hereby given that Bradford E. Brown, Ph.D., of the National Marine Fisheries Service, Southeast Fisheries Science Center, 75 Virginia Beach Drive, Miami, FL 33149, has applied in due form for a permit to take Atlantic bottlenose dolphins (*Tursiops truncatus*) for purposes of scientific research.

DATES: Written comments must be received on or before April 17, 1995.

ADDRESSES: The application and related documents are available for review upon written request or by appointment in the following offices:

Permits Division, Office of Protected Resources, NMFS, 1315 East-West Highway, Room 13130, Silver Spring, MD 20910 (301/713–2289);

Director, Southeast Region, NMFS, 9721 Executive Center Drive, N., St. Petersburg, FL 33702–2432 (813/893–3141).

Written data or views, or requests for a public hearing on this request, should be submitted to the Chief, Permits Division, F/PR1, Office of Protected Resources, 1335 East-West Highway, Silver Spring, MD 20910, within 30 days of the publication of this notice. Those individuals requesting a hearing should set forth the specific reasons why a hearing on this particular request would be appropriate.

Concurrent with the publication of this notice in the **Federal Register**, the Secretary of Commerce is forwarding copies of this application to the Marine Mammal Commission and its Committee of Scientific Advisors.

SUPPLEMENTARY INFORMATION: The subject permit is requested under the authority of the Marine Mammal Protection Act of 1972, as amended (16 U.S.C. 1361 *et seq.*), and the Regulations Governing the Taking and Importing of Marine Mammals (50 CFR part 216).

The applicant seeks authorization to take by harassment a maximum of 2,000 Atlantic bottlenose dolphins per year for the purpose of locating a maximum of 500 (over a 5-year period) dolphins suitable for take by capture for examination, sampling, marking, and release. The objectives of this study are to develop health assessment indices of dolphin populations and individuals in the southeast, and ultimately to assess the impact of human activities on specific populations.

Dated: March 10, 1995.

Ann D. Terbush,

Chief, Permits & Documentation Division, National Marine Fisheries Service.

[FR Doc. 95–6453 Filed 3–15–95; 8:45 am]

BILLING CODE 3510–22–F

[I.D. 030695F]

Marine Mammals

AGENCY: National Marine Fisheries Service (NMFS), National Oceanic and Atmospheric Administration (NOAA), Commerce.

ACTION: Receipt of application for a scientific research permit (P532B).

SUMMARY: Notice is hereby given that Texas A&M University, Department of Marine Biology, Galveston, TX 77553–1675 (Principal Investigators: Dr. Randall W. Davis, Texas A&M, Dr. Michael A. Castellini, University of Alaska, and Dr. Terrie M. Williams, University of California-Santa Cruz) has applied in due form for a permit to take Steller sea lions (*Eumetopias jubatus*) for purposes of scientific research.

DATES: Written comments must be received on or before April 17, 1995.

ADDRESSES: The application and related documents are available for review upon written request or by appointment in the following offices:

Permits Division, Office of Protected Resources, NMFS, 1315 East-West Highway, Room 13130, Silver Spring, MD 20910 (301/713–2289);

Director, Alaska Region, NMFS, P.O. Box 21668, Juneau, AK 99802–1668 (907/586–7221).

Written data or views, or requests for a public hearing on this request, should be submitted to the Chief, Permits Division, F/PR1, Office of Protected Resources, 1335 East-West Highway, Silver Spring, MD 20910, within 30 days of the publication of this notice. Those individuals requesting a hearing should set forth the specific reasons why a hearing on this particular request would be appropriate.

Concurrent with the publication of this notice in the **Federal Register**, the Secretary of Commerce is forwarding copies of this application to the Marine Mammal Commission and its Committee of Scientific Advisors.

SUPPLEMENTARY INFORMATION: The subject permit is requested under the authority of the Marine Mammal Protection Act of 1972, as amended (16 U.S.C. 1361 *et seq.*), the Regulations Governing the Taking and Importing of Marine Mammals (50 CFR part 216), the Endangered Species Act of 1973, as amended (16 U.S.C. 1531 *et seq.*), and the Regulations Governing the Taking, Importing, and Exporting of Endangered Fish and Wildlife (50 CFR part 222).

The applicants request authority to take up to 120 Steller sea lions (*Eumetopias jubatus*) annually for 5 years. Of these 40, each of the pups, females, and juveniles will be flipper tagged and dye marked, physiologically handled, blood, blubber and muscle biopsy sampled, and metabolic rate measured. Twenty each of the females and juveniles will carry a radio transmitter and miniature time-depth-stomach temperature recorder, be injected with Evans blue dye to determine plasma volume, have their lung volume measured using the helium dilution method, have an upper premolar no. 2 extracted for aging, and one - two whiskers clipped for stable isotope analysis. Each year up to 1,000 animals may be inadvertently harassed and up to six animals may accidentally die during the course of the research.

Dated: March 10, 1995.

Ann D. Terbush,

Chief, Permits & Documentation Division, National Marine Fisheries Service.

[FR Doc. 95–6452 Filed 3–15–95; 8:45 am]

BILLING CODE 3510–22–F

DEPARTMENT OF DEFENSE

Office of the Secretary

Meeting of the Semiconductor Technology Council

ACTION: Notice.

SUMMARY: Under the provisions of Public Law 92–463, the ''Federal Advisory Committee Act,'' notice is hereby given that the Semiconductor Technology Council will hold its initial

meeting. The Council's mission is to: link industry and national security needs to opportunities for cooperative investments, foster precompetitive cooperation among industry, government and academia, recommend opportunities for new R&D efforts and potential to rationalize and align on-going industry and government investments. Part of the meeting will be closed to the public in accordance with Section 10(d) of the Federal Advisory Committee Act, and pursuant to the appropriate provisions of Section 552b(c)(3) and (4), Title 5, U.S.C. There will be an open session from 3:45 to 4:15 p.m.

DATES: March 28, 1995.

ADDRESSES: 1300 Wilson Blvd., Suite 1450, Arlington, VA 22209.

FOR FURTHER INFORMATION CONTACT: Dr. Lance Glasser, Director, ARPA/ESTO, 3701 N. Fairfax Drive, Arlington, VA 22203–1714; telephone: 703/696–2213.

Dated: March 10, 1995.

Patricia L. Toppings,

Alternate OSD Federal Register Liaison Officer, Department of Defense.

[FR Doc. 95–6425 Filed 3–15–95; 8:45 am]

BILLING CODE 5000–04–M

Meeting of the Advisory Council on Dependents' Education

AGENCY: Department of Defense Dependents Schools (DoDDS), Office of the Secretary of Defense.

ACTION: Notice of meeting.

SUMMARY: This notice sets forth the schedule and proposed agenda of a forthcoming meeting of the Advisory Council on Dependents' Education (ACDE). It also describes the functions of the Council. Notice of this meeting is required under the National Advisory Committee Act. Although the meeting is open to the public, because of space constraints, anyone wishing to attend the meeting should contact the point of contact listed below.

DATES: April 21, 1995, 9 a.m. to 4:30 p.m. and April 22, 1995, 9:30 a.m. to 12 noon.

ADDRESSES: April 21: The Pentagon, room 3E869, Arlington, VA (an escort is required for attendees without DoD building passes); April 22: Crystal City Embassy Suites Hotel, Adams Morgan Room, 1402 South Eads, Arlington, VA.

FOR FURTHER INFORMATION CONTACT: Ms. Marilyn Wicher, Public Affairs Officer, DoD Education Activity, 4040 N. Fairfax Drive, Arlington, Virginia 22203–1635; Telephone number: 703–696–4236, extension 121.

SUPPLEMENTARY INFORMATION: The Advisory Council on Dependents' Education is established under title XIV, section 1411, of public Law 95–561, Defense Dependents' Education Act of 1978, as amended by title XII, section 1204(b)(3)–(5), of Public Law 99–145, Department of Defense Authorization Act of 1986 (20 U.S.C., chapter 25A, section 929, Advisory Council on Dependents' Education). The Council is cochaired by designees of the Secretary of Defense and the Secretary of Education. In addition to a representative of each of the Departments, 12 members are appointed jointly by the Secretaries of Defense and Education. Members include representatives of educational institutions and agencies, professional employee organizations and unions, unified military commands, school administrators, parents of DoDDS students, and one DoDDS student. The Director, DoDDS, serves as the Executive Secretary of the Council. The purpose of the Council is to advise the Secretary of Defense and the DoDDS Director about effective educational programs and practices that should be considered by DoDDS and to perform other tasks as may be required by the Secretary of Defense. The agenda includes responses to the recommendations made by the Council during its October 1994 meeting; reports about other topics raised by teams of ACDE members who visited DoDDS schools in Italy, Spain, and Turkey; the DoD Education Activity (DoDEA) draft strategic plan, to include the National Education Goals, academic achievement encouragement, multicultural/multiracial diversity and awareness, education of children with disabilities, and increased parental involvement; drawdown planning; the DoDEA draft technology plan; school staffing; transportation security and discipline on school buses; and a report on the extent to which Ritalin is administered to DoD dependents overseas.

Dated: March 10, 1995.

Patricia L. Toppings,

Alternate OSD Federal Register Liaison Officer, Department of Defense.

[FR Doc. 95–6424 Filed 3–15–95; 8:45 am]

BILLING CODE 5000–04–M

Defense Advisory Committee on Women in the Services (DACOWITS) Meeting; Notice of Conference

SUMMARY: Pursuant to Public Law 92–463, notice is hereby given of a forthcoming meeting of the Defense Advisory Committee on Women in the Services (DACOWITS). The purpose of DACOWITS is to advise the Secretary of Defense on matters relating to women in the Services.

The Committee meets semiannually.

DATES: April 27–30, 1995 (Summarized agenda follows).

ADDRESSES: The Sheraton Premier at Tysons Corner, 8661 Leesburg Pike, Vienna, VA 22182; (703) 448–1234.

AGENDA: Subcommittee and General Business sessions will be conducted daily and are open to the public. The agenda will include the following:

Thursday, April, 27, 1995, 7:00 a.m.–10:00 p.m.

Conference Registration (Conference Participants)
Subcommittee Breakfast (DACOWITS members)
New Member Orientation (1995 DACOWITS Appointees)
Update and Focus Meeting (1993 & 1994 DACOWITS Members)
Issue Review (DACOWITS members)
Opening Ceremony/Opening General Business Session (All conference participants)
Quality of Life Task Force Review (DACOWITS members and Military Representatives)
Installation Visit Training (DACOWITS members)
Orientation, Update & Focus Follow-up (DACOWITS members)
Get-Acquainted Reception (DACOWITS members, Military Representatives, Liaison Officers, Advisors & Staff)

Friday, April 28, 1995, 7:00 a.m. to 10:00 p.m.

Uniform Discussion (DACOWITS member and selected individuals)
Working Breakfast (Members, Military Representatives, Liaison Officers, Advisors & Staff)
Subcommittee Sessions (All conference participants)
Field Trip/Installation Visit (DACOWITS members & Senior Military Representatives Only)
Official Reception/OSD Official Dinner (DACOWITS members, and invited guests)

Saturday, April 29, 1995, 7:00 a.m.–7:00 p.m.

Subcommittee Sessions (All conference participants)
OSD Official Luncheon (DACOWITS members and invited guests)
Recommendations Review (DACOWITS members, Military Representatives, Liaison Officers, Advisors & Staff)
Executive Committee Mark-up
Pentagon Tour/Media Training (current DACOWITS members)

Sunday, April 30, 1995, 8:00 a.m.–12:30 p.m.

Issue Review (DACOWITS members, Military Representatives, Liaison Officers, Advisors & Staff)

Closing General Business Session; Voting; Installation Visit Report (All conference participants)

FOR FURTHER INFORMATION CONTACT: Lieutenant Commander Martha C. Gillette, USN or CPT Alissa B. Deuel, Plans and Communications Officer, DACOWITS and Military Women Matters, OUSD (Personnel and Readiness) 4000 Defense Pentagon, Room 3D769, Washington, DC 20301–4000; Telephone (703) 697–2122.

SUPPLEMENTARY INFORMATION: The following rules and regulations will govern the participation by members of the public at the conference:

(1) Members of the public will not be permitted to attend the official OSD Luncheon; Field Trip; and the OSD Reception and Dinner.

(2) The Opening Session/business session, all subcommittee sessions and the closing session will be open to the public.

(3) Interested persons may submit a written statement for consideration by the Committee and/or make an oral presentation of such during the conference.

(4) Persons desiring to make an oral presentation or submit a written statement to the Committee must notify the point of contact listed above no later than April 10.

(5) Length and number of oral presentations to be made will depend on the number of requests received from members of the public.

(6) Oral Presentations by members of the public will be permitted only on Sunday, April 30, 1995 before the full Committee.

(7) Each person desiring to make an oral presentation must provide the DACOWITS office 1 copy of the presentation by April 10 and make available 175 copies of any material that is intended for distribution at the conference.

(8) Persons submitting a written statement for inclusion in the minutes of the conference must submit to the DACOWITS staff one copy by the close of the conference.

(9) Other new items from members of the public may be presented in writing to any DACOWITS members for transmittal to the DACOWITS Chair or Director, DACOWITS and Military Women Matters to consider.

(10) Members of the public will not be permitted to enter into oral discussion conducted by the Committee members at any of the sessions; however, they will be permitted to reply to questions directed to them by the members of the Committee.

(11) Members of the public will be permitted to ask questions to the scheduled speakers if recognized by the Chair and if time allows after the official participants have asked questions and/or made comments.

Dated: March 10, 1995.

Patricia L. Toppings,

Alternate OSD Federal Register Liaison Officer, Department of Defense.

[FR Doc. 95–6423 Filed 3–15–95; 8:45 am]

BILLING CODE 5000–04–M

Office of the Secretary of Defense

Privacy Act of 1974; Add a System of Records

AGENCY: Department of Defense.

ACTION: Add a system of records.

SUMMARY: The Department of Defense is adding one system of records notice to its inventory of Privacy Act systems of records notices subject to the Privacy Act of 1974 (5 U.S.C. 552a), as amended.

DATES: The addition is effective April 17, 1995, unless comments are received that would result in a contrary determination.

ADDRESSES: Send comments to the OSD Privacy Act Officer, Washington Headquarter Services, Correspondence and Directives Division, Records Management Division, 1155 Defense Pentagon, Room 5C315, Washington, DC 20301–1155.

FOR FURTHER INFORMATION CONTACT: Mr. Dan Cragg at (703) 695–0970.

SUPPLEMENTARY INFORMATION: The Office of the Secretary of Defense systems of records notices subject to the Privacy Act of 1974 (5 U.S.C. 552a), as amended, have been published in the **Federal Register** and are available from the address above.

The proposed system report, as required by 5 U.S.C. 552a(r) of the Privacy Act of 1974, as amended, was submitted on February 21, 1995, to the Committee on Government Operations of the House of Representatives, the Committee on Governmental Affairs of the Senate, and the Office of Management and Budget (ORB) pursuant to paragraph 4c of Appendix I to ORB Circular No. A–130, 'Federal Agency Responsibilities for Maintaining Records About Individuals,' dated July 25, 1994 (59 FR 37906, July 25, 1994).

Dated: March 7, 1995.

Patricia L. Toppings,

Alternate OSD Federal Register Liaison Officer, Department of Defense.

DGC 16

SYSTEM NAME:

Political Appointment Vetting Files.

SYSTEM LOCATION:

Office of Legal Counsel, Department of Defense General Counsel, 1600 Defense Pentagon, Washington, DC 20301–1600.

CATEGORIES OF INDIVIDUALS COVERED BY THE SYSTEM:

Individuals who are possible appointments to political positions in DoD, consisting of non-career Senior Executive Service (SES) (Schedule 'C').

CATEGORIES OF RECORDS IN THE SYSTEM:

Files consist of referral letters, White House clearance letters, information about individual's professional licenses (if applicable), IRS results of inquiries, notation of National Agency Check (NAC) results (favorable or otherwise), internal memoranda concerning a candidate, Financial Disclosure Statements (Standard Form 278), results of inquiries about the individual, Personal Data Questionnaires and General Counsel Interview sheets, published works including books, newspaper, magazine articles and treatises by the applicant, newspaper and magazine articles written about the applicant, and other correspondence relating to the selection and appointment of political appointees.

AUTHORITY FOR MAINTENANCE OF THE SYSTEM:

10 U.S.C 133 and E.O. 9397.

PURPOSE(S):

To evaluate suitability of individuals seeking or who have been recommended for non-career positions within DoD. Files are used by authorized personnel within the Office of the Secretary of Defense to resolve issues involving a potential candidate's suitability for appointment, e.g. conflicts of interest, financial mismanagement, moral turpitude, etc.

ROUTINE USES OF RECORDS MAINTAINED IN THE SYSTEM, INCLUDING CATEGORIES OF USERS AND THE PURPOSES OF SUCH USES:

In addition to those disclosures generally permitted under 5 U.S.C. 552a(b) of the Privacy Act, these records or information contained therein may specifically be disclosed outside the DoD as a routine use pursuant to 5 U.S.C. 552a(b)(3) as follows:

To Federal, state, local, or foreign law enforcement authorities if the record indicates, on its face or in conjunction with other records, a violation of law; to the Department of Justice in pending or potential litigation to which the record is pertinent; to the General Services Administration and National Archives and Records Administration for records management purposes; to U. S. Government and foreign counterintelligence activities as authorized by federal law or executive order.

The 'Blanket Routine Uses' set forth at the beginning of OSD's compilation of systems of records notices *do not* apply to this system.

POLICIES AND PRACTICES FOR STORING, RETRIEVING, ACCESSING, RETAINING, AND DISPOSING OF RECORDS IN THE SYSTEM:

STORAGE:

Correspondence and forms in file folders.

RETRIEVABILITY:

Information accessed by last name of individual and Social Security Number.

SAFEGUARDS:

Building employs security guards. Data is kept in locked safes and is accessible to authorized personnel only.

RETENTION AND DISPOSAL:

Destroy at the end of the Presidential administration during which the individual is hired. For nonselectees, records of individuals who are not hired are destroyed one year after the file is closed, but not later than the end of the Presidential administration during which the individual is considered.

SYSTEM MANAGER(S) AND ADDRESS:

Office of Legal Counsel, Department of Defense General Counsel, 1600 Defense Pentagon, Washington, DC 20301–1600.

NOTIFICATION PROCEDURE:

Individuals seeking to determine whether information about themselves in contained in this system should address written inquiries to Office of Legal Counsel, Department of Defense General Counsel, 1600 Defense Pentagon, Washington, DC 20301–1600.

Requests for information should contain individual's full name, any former names used, and Social Security Number.

RECORD ACCESS PROCEDURES:

Individuals seeking access to information about themselves contained in this system should address written inquiries to Directorate for Freedom of Information and Security Review, Office of the Assistant Secretary of Defense (Public Affairs), 1400 Defense Pentagon, Room 2C757, Washington, DC 20301–1400.

The request must include the individual's full name, any former names used, and Social Security Number.

CONTESTING RECORD PROCEDURES:

The OSD's rules for accessing records, for contesting contents and appealing initial agency determinations are contained in OSD Administrative Instruction No. 81; 32 CFR part 311; or may be obtained from the system manager.

RECORD SOURCE CATEGORIES:

Submitted by individuals themselves and compiled from interviews with those individuals seeking non-career positions. Additional sources may include The White House, Office of Personnel Management, Internal Revenue Service, Defense Investigative Service, and international, state, and local jurisdiction law enforcement components for clearance documents, and other correspondence and public record sources.

EXEMPTIONS CLAIMED FOR THE SYSTEM:

Portions of this system of records may be exempt from certain provisions of 5 U.S.C. 552a(k)(5).

An exemption rule for this record system has been promulgated in accordance with the requirements of 5 U.S.C. 553(b)(1), (2), and (3), (c) and (e) and published in 32 CFR part 311. For additional information contact the system manager.

[FR Doc. 95–6421 Filed 3–15–95; 8:45 am]

BILLING CODE 5000–04–F

DELAWARE RIVER BASIN COMMISSION

Notice of Commission Meeting and Public Hearing

Notice is hereby given that the Delaware River Basin Commission will hold a public hearing on Wednesday, March 22, 1995. The hearing will be part of the Commission's regular business meeting which is open to the public and scheduled to begin at 10:30 a.m. in the Goddard Conference Room of the Commission's offices at 25 State Police Drive, West Trenton, New Jersey.

An informal conference among the Commissioners and staff will be open for public observation at 9:00 a.m. at the same location and will include a discussion of the Delaware Estuary management plan and DRBC commitments for consideration.

The subjects of the hearing will be as follows:

Application for Approval of the Following Projects Pursuant to Article 10.3, Article 11 and/or Section 3.8 of the Compact:

1. *Holdover Project: Concord Mobile Home Park D–92–68.* A sewage treatment plant (STP) project that entails construction of a 63,500 gallons per day (gpd) capacity secondary level extended aeration plant to serve a proposed 254-lot mobile home park in Concord Township, Delaware County, Pennsylvania. The STP will discharge to Green Creek, a tributary of West Branch Chester Creek, at a point just north of Concord Road. This hearing continues that of February 22, 1995.

2. *Merrill Creek Owners Group (MCOG) D–77–110 CP (Amendment 6).* An application for inclusion of the Keystone Energy Service Company L.P. Facility (approved by Docket D–90–48 on September 25, 1991) as an additional Designated Unit to Table A (Revised) of the Merrill Creek Reservoir Project, to enable releases from the reservoir to make up for consumptive water use during drought periods. The Keystone Cogeneration Facility is expected to average approximately 2.7 million gallons per day (mgd) in consumptive use and is located west of Route 130, adjacent to the Delaware River in Logan Township, Gloucester County, New Jersey; Merrill Creek Reservoir is located in Harmony Township, Warren County, New Jersey.

3. *Hercules Incorporated D–84–28 RENEWAL.* An application for the renewal of a ground water withdrawal project to supply up to 10 million gallons (mg)/30 days of water to the applicant's Hercules Research Center from 14 existing wells. Commission approval on August 15, 1984 was limited to 10 years. The applicant requests that the total withdrawal from all wells be decreased from 14 mg/30 days to 10 mg/30 days. The project is located in New Castle County, Delaware.

4. *Borough of Elmer D–85–24 CP RENEWAL–2.* An application for the renewal of a ground water withdrawal project to supply up to 10 mg/30 days of water to the applicant's distribution system from Well Nos. 6 and 8. Commission approval on September 27, 1989 was limited to five years and will expire unless renewed. The applicant requests that the total withdrawal from all wells remain limited to 10 mg/30 days. The project is located in Elmer Borough, Salem County, New Jersey.

5. *Town of Liberty D–89–58 CP RENEWAL.* An application for the renewal of a ground water withdrawal

project to supply up to 4.0 mg/30 days of water to the applicant's Ferndale Water District from Well Nos. 1, 2 and 3. Commission approval on February 28, 1990 was limited to five years. The applicant requests that the total withdrawal from all wells remain limited to 4.0 mg/30 days. The project is located in the Town of Liberty, Sullivan County, New York.

6. *Township of Greenwich D–94–51 CP.* An application for approval of a ground water withdrawal project to supply up to 43.2 mg/30 days of water to the applicant's distribution system from new Well No. 4A, and to retain the existing withdrawal limit from all wells of 46.8 mg/30 days. The project is located in Greenwich Township, Gloucester County, New Jersey.

7. *Harcros Pigments, Inc. D–94–75.* A project to upgrade the applicant's existing 1.29 mgd industrial wastewater treatment plant (IWTP) by the installation of a mechanical draft cooling tower, which is designed to enable the IWTP effluent to meet revised temperature limits. Consumptive water loss will increase slightly to a maximum of 7,200 gpd due to the effluent cooling process. The IWTP will continue to serve only the applicant's pigment manufacturing operations and discharge to the Bushkill Creek at the City of Easton, approximately 2.5 miles upstream of its confluence with the Delaware River in Northampton County, Pennsylvania. No increased water withdrawal is proposed.

8. *Integrated Health Services at Penn, Inc. D–95–4.* A project to modify the applicant's existing 12,500 gpd sewage treatment plant (STP) by improving the treatment processes and facilities, including the tertiary filtration system; ultraviolet disinfection is also proposed. The STP serves the applicant's nursing home and is located in Lake Township, Wayne County, Pennsylvania just northeast of Lake Ariel and south of Route 191. With no increase in permitted flow, the discharge will continue to an unnamed tributary of Ariel Creek which flows to Lake Wallenpaupack.

9. *Holman Enterprises-RMP Facility D–95–5.* A ground water remediation project which entails withdrawal and treatment of approximately 74,000 gpd of contaminated ground water for discharge to South Branch Pennsauken Creek in Pennsauken Township, Camden County, New Jersey. The project treatment facility will be located at the applicant's engine rebuilding plant site just east of Haddonfield Road and south of Route 73 in Pennsauken Township, Camden County, New Jersey.

10. *Valley Forge Sewer Authority D–95–6 CP.* A project to expand the applicant's existing 8.0 mgd secondary sewage treatment plant (STP) to 8.99 mgd by rerating the existing facilities after minor modifications. The STP service area will continue to include East Pikeland, Schuylkill, and Charleston Townships; the Borough of Malvern; and portions of Easttown, Tredyffrin, East Whiteland, and Willistown Townships, all in Chester County, Pennsylvania. The STP will continue to discharge treated effluent to the Schuylkill River in Schuylkill Township, Chester County, Pennsylvania.

Documents related to these items may be examined at the Commission's offices. Preliminary dockets are available in single copies upon request. Please contact George C. Elias concerning docket-related questions. Persons wishing to testify at this hearing are requested to register with the Secretary prior to the hearing.

Dated: March 7, 1995.

Susan M. Weisman,

Secretary.

[FR Doc. 95–6447 Filed 3–15–95; 8:45 am]

BILLING CODE 6360–01–P

DEPARTMENT OF ENERGY

Extension of Public Comment Period for the Environmental Management Programmatic Environmental Impact Statement

AGENCY: U.S. Department of Energy.

ACTION: Extension of public comment period.

SUMMARY: On October 22, 1990, the Department of Energy issued a Notice of Intent to prepare the Environmental Restoration and Waste Management Programmatic Environmental Impact Statement (PEIS). (55 FR 42633). In the Notice of Intent and in an Implementation Plan issued in January 1994, the Department identified the proposed action as follows: ''to formulate and implement an integrated environmental restoration and waste management program in a safe and environmentally sound manner and in compliance with applicable laws, regulations and standards.'' A notice was issued on January 24, 1995, inviting the public to provide written comments on a proposed modification to the scope and name of the PEIS. (60 FR 4607). In the notice, the Department proposed to modify the proposed action to eliminate the analysis of environmental restoration alternatives. As modified, the PEIS would consider how to manage certain types of radioactive and hazardous waste, and analyze alternative sites at which the wastes could be managed in the future. The PEIS would focus its programmatic evaluations on waste management facilities, and would henceforth be known as the ''Waste Management Programmatic Environmental Impact Statement.''

INVITATION TO COMMENT: In response to a request from the public, the Department is extending for 30 days, until April 10, 1995, the written comment period for the proposed modification to the Programmatic Environmental Impact Statement. A summary of the comments received in response to this notice will be contained in an appendix to the draft Waste Management Programmatic Environmental Impact Statement.

ADDRESSES AND FURTHER INFORMATION: Written comments and requests for further information on the Programmatic Environmental Impact Statement should be directed to: James A. Turi, Office of Waste Management (EM–33), U.S. Department of Energy, 1000 Independence Avenue SW., Washington, DC 20585–0002, (301) 903–7147. For information on the Department's National Environmental Policy Act process, contact: Carol M. Borgstrom, Director, Office of NEPA Policy and Assistance (EH–42), U.S. Department of Energy, 1000 Independence Avenue SW., Washington, DC 20585, (202) 586–4600 or leave a message at 1–800–472–2756.

Issued in Washington, D.C., this 10th day of March 1995.

Thomas P. Grumbly,

Assistant Secretary for Environmental Management.

[FR Doc. 95–6520 Filed 3–15–95; 8:45 am]

BILLING CODE 6450–01–P

Pittsburgh Energy Technology Center; Notice of Unsolicited Financial Assistance Award

AGENCY: U.S. Department of Energy, Pittsburgh Energy Technology Center.

ACTION: Acceptance of an unsolicited proposal application of a grant award with the foundation at NJIT and the New Jersey Institute of Technology.

SUMMARY: The U.S. Department of Energy (DOE), Pittsburgh Energy Technology Center, announces that pursuant to 10 CFR 600.14 (D) and (E), it intends to award a Grant through the Pittsburgh Energy Technology Center (PETC) to The Foundation at NJIT and The New Jersey Institute of Technology

for ''Experimental Investigation of Vibration-Induced Bulk Solids Transport and Segregation''.

FOR FURTHER INFORMATION CONTACT: U.S. Department of Energy, Pittsburgh Energy Technology Center, Acquisition and Assistance Division, P.O. Box 10940, MS 921–143, Pittsburgh, PA 15236–0940, Attn.: Robyn L. Knapek, Telephone: (412) 892–6201.

SUPPLEMENTARY INFORMATION:

Grant No. DE–FG22–95PC95203

Title of Research Effort—''Experimental Investigation of Vibration-Induced Bulk Solids Transport Segregation''

Awardee—The Foundation at NJIT and The New Jersey Institute of Technology

Term of Assistance Effort—Twelve (12) Months

Cost of Assistance Effort—The total estimated value is $67,557,00. There will be cost-sharing involved in this transaction; financial assistance of 53.5% ($34,451.00) will be provided by the U.S. Department of Energy.

Objective

In accordance with 10 CFR 600.14, The Foundation at NJIT and The New Jersey Institute of Technology has been selected as the grant recipient as the result of the evaluation of an unsolicited proposal.

The objective of this project is to analyze the effects of a number of parameters on the behavior of particles in vibration beds, with particular attention paid to induced flows and their influence on the motion of an embedded large particle. With the help of flow visualization technique and computer simulation proposed, it is anticipated that various flow behavior would be revealed, and this may shed light on the possible mechanisms for particle segregation.

The benefits include a study of the effects (quantitative as well as qualitative) on convective transport and segregation due to various parameters (wall conditions, surface particle properties, size ratio, etc.).

This proposed project, resulting from the submission of an unsolicited proposal, represents a unique or innovative idea, method, or approach which would not be eligible for financial assistance under a recent, current, or planned solicitation. The DOE has determined that a competitive solicitation would be inappropriate. This award will not be made for at least 14 days to allow for public comment.

Dale A. Siciliano,

Contracting Officer.

[FR Doc. 95–6521 Filed 3–15–95; 8:45 am]

BILLING CODE 6450–01–M

Federal Energy Regulatory Commission

Pacific Gas Transmission Co.; Notice of Amendment

[Docket No. CP93–618–004]

March 10, 1995.

Take notice that on March 3, 1995, Pacific Gas Transmission Company (PGT), 160 Spear Street, San Francisco, California, 94105–1570, filed an application in Docket No. CP93–618–004. In this case, PGT is seeking an amendment to a Certificate of Public Convenience and Necessity issued in Docket Nos. CP93–618, *et al.* under Section 7(c) of the Natural Gas Act, and Part 157, Subpart A of the commission's Regulations. The Certificate that PGT seeks to amend was issued by the Commission's Order of January 12, 1995, in the above dockets. PGT wants to partially increase the size of the Medford Extension, one of the two pipeline extensions approved by the January 12, 1995, Order. PGT's proposal is more fully set forth in the amendment which is on file with the Commission and open to public inspection.

PGT now seeks to construct and operate about 22 miles of 16-inch pipeline on the Medford Extension, from the interconnection with PGT's mainline to Klamath Falls, Oregon, rather that 12-inch pipeline for that segment. The remainder of the 86.5 miles of the Medford Extension, which continues on to Medford, Oregon, would be a 12-inch pipeline, as previously approved. The increased diameter pipe would allow for additional capacity on the Medford Extension so PGT can provide up to 90,000 MMBtu per day of additional firm transportation service to Diamond Energy, Inc. (Diamond Energy). Diamond Energy, a subsidiary of Mitsubishi Corp., and the City of Klamath Falls have plans to jointly build a gas-fired electric generation station which would be operational in 1998.

PGT states that it seeks to take advantage of the short-term opportunity to install the larger pipe when the Medford Extension is initially constructed this summer. PGT says that this will avoid unnecessary future environmental disruptions and higher project costs associated with the future construction of pipeline looping or compressor facilities in three years time. PGT says that the additional cost of the larger pipe is estimated to be $2.3 million, including AFUDC. The increased costs of the 16-inch pipe would be held out of the rate base of the Medford Extension until after service to Diamond Energy begins.

PGT proposes to recover the incremental cost-of-service of the increased pipe size through surcharges to its existing FTS-1 Rate Schedule. Diamond Energy would pay the FTS-1 rate for mainline service and a surcharge for service on the Medford Extension.

PGT says that the surcharge that Diamond Energy would pay is a negotiated rate based on the avoided costs of Diamond Energy; Diamond Energy would not have to build its own pipeline to PGT. The negotiated reservation surcharge is $0.090388 for the first 45,000 MMBtu per day of service and $0.035477 for the second 45,000 MMBtu per day of service.

PGT says that incremental revenues from the rates paid by Diamond Energy will reduce costs of WP Natural Gas, a division of The Washington Water Power Company (Wash. Water), the only other customer on the Medford Extension. In the January 12, 1995, Order the Commission approved a special deferred cost recovery account/rate mechanism for Wash. Water. PGT says that Wash. Water's obligations under the deferred cost recovery mechanism will be reduced and shortened in time from 30 years to 18 years. PGT says it will include this revenue crediting information in its annual reports/filings containing the adjusted Wash. Water rate and related information on any deferred balance.

PGT proposes to recover the cost of Medford Extension based upon a straight-line depreciation schedule which is equal to the length of the transportation agreements for each extension. For service to Wash. Water over the Medford Extension the term of the contracts is 30 years, (there are two contracts between PGT and Wash. Water). For service to Diamond Energy over the Medford Extension the term of the contract is 27 years. Diamond Energy would begin service in November, 1998, three years after Wash. Water begins service.

PGT states that copies of its amendment have been sent to all interested state regulatory agencies and all parties on the official service list in Docket No. CP93–618, *et al.* PGT asks for expeditious approval of its proposal by June 1, 1995, so that the Medford Extension can be in-service by November, 1995. Otherwise, it will withdraw its request to install the 22 miles of 16-inch pipe and only build the approved 12-inch pipeline extension.

Any person desiring to be heard or to protest said amendment should file a motion to intervene or protest with the Federal Energy Regulatory Commission,

825 North Capitol Street, N.E., Washington, D.C. 20426, in accordance with Sections 385.214 and 385.211 of the Commission's Rules and Regulations. All such motions or protests should be filed on or before March 24, 1995. Protests will be considered by the Commission in determining the appropriate action to be taken, but will not serve to make protestants parties to the proceeding. Any person wishing to become a party to the proceeding or to participate as a party in any hearing therein must file a motion to intervene in accordance with the Commission's Rules. However, any person who has already filed an intervention(s) in Docket No. CP93–618, *et al.*, need not file again.

Lois D. Cashell

Secretary.

[FR Doc. 95–6455 Filed 3–15–95; 8:45 am]

BILLING CODE 6717–01–M

[Docket No. ER94–1480–000, et al.]

Louisville Gas & Electric Company, et al.; Electric Rate and Corporate Regulation Filings

March 9, 1995.

Take notice that the following filings have been made with the Commission:

1. Louisville Gas & Electric Company

[Docket No. ER94–1480–000]

Take notice that on February 15, 1995, Louisville Gas & Electric Company tendered for filing an amendment in the above-referenced docket.

Comment date: March 23, 1995, in accordance with Standard Paragraph E at the end of this notice.

2. Electric Clearinghouse Inc.

[Docket No. ER94–968–004]

Take notice that on March 6, 1995, Electric Clearinghouse Inc. (ECI) tendered for filing a revised summary of ECI's activity for the quarter ending December 31, 1994.

3. Long Island Lighting Company

[Docket No. ER94–1599–000]

Take notice that on March 3, 1995, Long Island Lighting Company (LILCO), tendered for filing an amendment to its filing in this docket.

Copies of this filing have been served by LILCO on Northeast Utilities Service Company and the New York State Public Service Commission.

Comment date: March 23, 1995, in accordance with Standard Paragraph E at the end of this notice.

4. Mid-American Resources, Inc.

[Docket No. ER95–78–000]

Take notice that on February 27, 1995, Mid-American Resources, Inc. tendered for filing an amendment in the above-referenced docket.

Comment date: March 23, 1995, in accordance with Standard Paragraph E at the end of this notice.

5. Southern California Edison Company

[Docket No. ER95–361–000]

Take notice that on February 24, 1995, Southern California Edison Company (Edison) submitted supplemental information regarding its filing in the above captioned docket.

Copies of this filing were served upon the Public Utilities Commission of the State of California and all interested parties.

Comment date: March 23, 1995, in accordance with Standard Paragraph E at the end of this notice.

6. Westcoast Power Marketing Inc.

[Docket No. ER95–378–000]

Take notice that on February 21, 1995, Westcoast Power Marketing Inc. tendered for filing supplemental information to its January 3, 1995 filing in the-above-referenced docket.

Comment date: March 23, 1995, in accordance with Standard Paragraph E at the end of this notice.

7. The Empire District Electric Company

[Docket No. ER95–446–000□

Take notice that The Empire District Electric Company (EDE), on March 2, 1995, tendered for filing proposed changes in its Transmission Peaking Service Contract between EDE and the Kansas Electric Power Cooperative, Inc. (KEPCo).

This filing is to amend Docket No. ER95–446–000.

Copies of the filing were served upon the Arkansas Public Service Commission, Kansas Corporation Commission, the Missouri Public Service Commission, Oklahoma Corporation Commission, and KEPCo.

Comment date: March 23, 1995, in accordance with Standard Paragraph E at the end of this notice.

8. NorAm Energy Services, Inc.

[Docket No. ER95–512–000]

Take notice that on February 27, 1995, NorAm Energy Services, Inc. tendered for filing a Notice of Withdrawal in the above-referenced docket.

Comment date: March 23, 1995, in accordance with Standard Paragraph E at the end of this notice.

9. New England Power Company

[Docket No. ER95–554–000]

Take notice that on March 3, 1995, New England Power Company tendered for filing supplemental information to its February 6, 1995 filing in the above-referenced docket.

Comment date: March 23, 1995, in accordance with Standard Paragraph E at the end of this notice.

10. Oklahoma Gas and Electric Company

[Docket No. ER95–644–000]

Take notice that on February 24, 1995, Oklahoma Gas and Purchase Company (OG&E) tendered for filing a Supplemental Power Purchase Agreement with the Oklahoma Municipal Power Authority (OMPA).

Comment date: March 23, 1995, in accordance with Standard Paragraph E at the end of this notice.

11. New England Power Company

[Docket No. ER95–645–000]

Take notice that on February 24, 1995, New England Power Company (NEP) tendered for filing an amendment to its FERC Rate Schedule No. 439. NEP states that the effect of the amendment does not increase or decrease the rates to be charged.

Comment date: March 23, 1995, in accordance with Standard Paragraph E at the end of this notice.

12. PacifiCorp

[Docket No. ER95–646–000]

Take notice that on February 24, 1995, PacifiCorp tendered for filing a Power Sales Agreement (Agreement) dated September 20, 1994 between PacifiCorp and City of Anaheim, California (Anaheim).

PacifiCorp requests an effective date of May 1, 1995 be assigned to the Agreement.

Copies of this filing were supplied to Anaheim, the Public Utilities Commission of the State of California, the Washington Utilities and Transportation Commission and the Public Utility Commission of Oregon.

Comment date: March 23, 1995, in accordance with Standard Paragraph E at the end of this notice.

13. San Diego Gas & Electric Company

[Docket No. ER95–647–000]

Take notice that on February 24, 1995, San Diego Gas & Electric Company (SDG&E) tendered for filing an Interchange Agreement (Agreement) between SDG&E and LG&E Power Marketing Inc., (LPM).

SDG&E requests that the Commission allow the Agreement to become effective

on the 1st day of May, 1995 or at the earliest possible date.

Copies of this filing were served upon the Public Utilities Commission of the State of California and LPM.

Comment date: March 23, 1995, in accordance with Standard Paragraph E at the end of this notice.

14. Jersey Central Power & Light Company; Metropolitan Edison Company; Pennsylvania Electric Company

[Docket No. ER95–648–000]

Take notice that on February 24, 1995, GPU Service Corporation (GPU), on behalf of Jersey Central Power & Light Company, Metropolitan Edison Company and Pennsylvania Electric Company (jointly referred to as the GPU Operating Companies), filed an executed Service Agreement between GPU and CNG Power Services Corporation (CNG), dated February 15, 1995. This Service Agreement specifies that CNG has agreed to the rates, terms and conditions of the GPU Operating Companies' Operating Capacity and/or Energy Sales Tariff (Sales Tariff) designated as FERC Electric Tariff, Original Volume No. 1. The Sales Tariff was accepted by the Commission by letter order issued on February 10, 1995 in *Jersey Central Power & Light Co., Metropolitan Edison Co. and Pennsylvania Electric Co.*, Docket No. ER95–276–000 and allows GPU and CNG to enter into separately scheduled transactions under which the GPU Operating Companies will make available for sale, surplus operating capacity and/or energy at negotiated rates that are no higher than the GPU Operating Companies' cost of service.

GPU requests a waiver of the Commission's notice requirements for good cause shown and an effective date of February 15, 1995 for the Service Agreement.

GPU has served copies of the filing on regulatory agencies in New Jersey and Pennsylvania.

Comment date: March 23, 1995, in accordance with Standard Paragraph E at the end of this notice.

15. Southern California Edison Company

[Docket No. ER95–664–000]

Take notice that on March 1, 1995, Southern California Edison Company (Edison) tendered for filing the following Supplemental Agreement (Supplemental Agreement) to the 1990 Integrated Operations Agreement (IOA) with the City of Anaheim (Anaheim), FERC Rate Schedule No. 246, and associated Firm Transmission Service Agreement:

Supplemental Agreement Between Southern California Edison Company And City of Anaheim for the Integration of PacifiCorp Power Sales Agreement

Edison-Anaheim PacifiCorp Firm Transmission Service Agreement Between Southern California Edison Company and City of Anaheim

The Supplemental Agreement and FTS Agreement set forth the terms and conditions by which Edison will integrate and provide transmission service for Anaheim's PacifiCorp resource.

Copies of this filing were served upon the Public Utilities Commission of the State of California and all interested parties.

Comment date: March 23, 1995, in accordance with Standard Paragraph E at the end of this notice.

16. Consolidated Edison Company of New York, Inc.

[Docket No. ER95–670–000]

Take notice that on March 1, 1995, Consolidated Edison Company of New York, Inc. (Con Edison) tendered for filing an agreement with New England Power Company (NEP) to provide for the sale of energy and capacity. For energy sold the ceiling rate is 100 percent of the incremental energy cst plus up to 10 percent of the SIC (which such 10 percent is limited to 1 mill per KWhr when the SIC in the hour reflects a purchased power resource). The ceiling rate for capacity sold is $7.70 per megawatt hour.

Con Edison states that a copy of this filing has been served by overnight delivery upon NEP.

Comment date: March 23, 1995, in accordance with Standard Paragraph E at the end of this notice.

17. Northeast Utilities Service Company

[Docket No. ER95–671–000]

Take notice that Northeast Utilities Service Company (NUSCO) on March 1, 1995, tendered for filing a Service Agreement with Citizens Lehman Power Sales (Citizens) under the NU System Companies' System Power Sales/ Exchange Tariff No. 6.

NUSCO states that a copy of this filing has been mailed to Citizens.

NUSCO requests that the Service Agreement become effective on March 15, 1995.

Comment date: March 23, 1995, in accordance with Standard Paragraph E at the end of this notice.

18. Northwestern Wisconsin Electric Company

[Docket No. ER95–672–000]

Take notice that Northwestern Wisconsin Electric Company on March 1, 1995, tendered for filing proposed changes in its Transmission Use Charge, Rate Schedule FERC No. 2. The proposed changes would increase revenues from jurisdictional sales by $954.80 based on the 12 month period ending April 30, 1995. Northwestern Wisconsin Electric Company is proposing this rate schedule change to more accurately reflect the actual cost of transmitting energy from one utility to another based on current cost data. The service agreement for which this rate is calculated calls for the Transmission Use Charge to be reviewed annually and revised on May 1.

Northwestern Wisconsin Electric Company requests this Rate Schedule Change become effective May 1, 1995.

Copies of this filing have been provided to the respective parties and to the Public Service Commission of Wisconsin.

Comment date: March 23, 1995, in accordance with Standard Paragraph E at the end of this notice.

19. Southern Company Services, Inc.

[Docket No. ER95–673–000]

Take notice that on March 1, 1995, Southern Company Services, Inc. (SCS), acting on behalf of Alabama Power Company, Georgia Power Company, Gulf Power Company, Mississippi Power Company, and Savannah Electric and Power Company (collectively referred to as Southern Companies) filed a Service Agreement dated as of February 11, 1995 between Gulf Stream Energy and SCS (as agent for Southern Companies) for service under the Short-Term Non-Firm Transmission Service Tariff of Southern Companies.

Comment date: March 23, 1995, in accordance with Standard Paragraph E at the end of this notice.

20. Southern Company Services, Inc.

[Docket No. ER95–674–000]

Take notice that on March 1, 1995, Southern Company Services, Inc. (SCS), acting on behalf of Alabama Power Company, Georgia Power Company, Gulf Power Company, Mississippi Power Company, and Savannah Electric and Power Company (collectively referred to as Southern Companies) filed a Service Agreement dated as of February 10, 1995 between Electric Clearinghouse, Inc. and SCS (as agent for Southern Companies) for service under the Short-Term Non-Firm Transmission Service Tariff of Southern Companies.

Comment date: March 23, 1995, in accordance with Standard Paragraph E at the end of this notice.

21. Pennsylvania Power & Light Company

[Docket No. ER95–675–000]

Take notice that on March 1, 1995, Pennsylvania Power & Light Company (PP&L), tendered for filing as initial rate schedules two contributions-in-aid-of-construction agreements (the Agreements) dated January 10, 1995, (1) between PP&L and Jersey Central Power Light Company, (Jersey Central) and (2) between PP&L and the Pennsylvania Electric Company (Penelec).

The purpose of the Jersey Central agreement is to enable PP&L to recover costs it incurred with respect to relay and control changes at PP&L's Martins Creed 230 kV Switchyard to accommodate the tapping of the PP&L's Martins Creed-Gilbert 230 kV Line to supply Jersey Central's new Morris Part Substation 230–34.5 kV transformer. The purpose of the Penelec agreement is to enable PP&L to recover costs associated with PP&L's installation of a Remote Terminal Unit at PP&L's Lackawanna Substation on behalf of Penelec to support its upgrade of antiquated telemetering equipment.

PP&L states that copies of the filing were served on Jersey Central and Penelec.

Comment date: March 23, 1995, in accordance with Standard Paragraph E at the end of this notice.

22. Virginia Electric and Power Company

[Docket No. ER95–676–000]

Take notice that on March 1, 1995, Virginia Electric and Power Company (Virginia Power), tendered for filing a Rate Schedule Supplement which unilaterally amends five interconnection agreements between Virginia Power and its interconnected neighboring utilities, and Service Schedules B and C in Virginia Power's Power Sales Tariff.

The Rate Schedule Supplement sets forth the method of recovery of emission allowance costs in coordination power sales. An effective date of May 1, 1995 is requested.

A copy of the filing was served upon affected companies as well as upon the Virginia State Corporation Commission and the North Carolina Utilities Commission.

Comment date: March 23, 1995, in accordance with Standard Paragraph E at the end of this notice.

23. The Washington Water Power Company

[Docket No. ER95–677–000]

Take notice that on March 1, 1995, The Washington Water Power Company (WWP), tendered for filing with the Federal Energy Regulatory Commission pursuant to 18 CFR 35.12, an Agreement for sale of capacity and associated energy to The City of Riverside, California (Riverside) each year from May through October for ten (10) years.

Comment date: March 23, 1995, in accordance with Standard Paragraph E at the end of this notice.

24. New England Power Company

[Docket No. ER95–678–000]

Take notice that on March 1, 1995, New England Power Company (NEP) submitted for filing an Amended Contract with its affiliate, Massachusetts Electric Company (MECO). The Amended Contract is executed pursuant to Schedule III-C of NEP's FERC Electric Tariff, Original Volume No. 1. According to NEP, it provides for the sale from NEP to MECO of electricity on an interruptible basis for resale by MECO to one of its retail customers.

Comment date: March 23, 1995, in accordance with Standard Paragraph E at the end of this notice.

25. The Detroit Edison Company Consumers Power Company

[Docket No. ER95–681–000]

Take notice that on March 2, 1995, Consumers Power Company (Consumers), acting on behalf of itself and as agent for The Detroit Edison Company (Detroit Edison), tendered for filing various rate schedule changes to Consumers Power Company Rate Schedule FPC No. 41 and The Detroit Edison Company Rate Schedule FPC No. 22.

Copies of the filing were served upon the Michigan Public Service Commission, Consumers and Detroit Edison.

Comment date: March 23, 1995, in accordance with Standard Paragraph E at the end of this notice.

Standard Paragraphs

E. Any person desiring to be heard or to protest said filing should file a motion to intervene or protest with the Federal Energy Regulatory Commission, 825 North Capitol Street, N.E., Washington, D.C. 20426, in accordance with Rules 211 and 214 of the Commission's Rules of Practice and Procedure (18 CFR 385.211 and 18 CFR 385.214). All such motions or protests should be filed on or before the comment date. Protests will be considered by the Commission in determining the appropriate action to be taken, but will not serve to make protestants parties to the proceeding. Any person wishing to become a party must file a motion to intervene. Copies of this filing are on file with the Commission and are available for public inspection.

Lois D. Cashell,

Secretary.

[FR Doc. 95–6487 Filed 3–15–95; 8:45 am]

BILLING CODE 6717–01–P

[Project No. 11346–001 Iowa]

FORIA Hydro Corp.; Notice of Availability of Final Environmental Assessment

March 10, 1995.

In accordance with the National Environmental Policy Act of 1969 and the Federal Energy Regulatory Commission's (Commission's) regulations, 18 CFR Part 380 (Order No. 486, 525 FR. 47897), the Office of Hydropower Licensing has reviewed the application for minor license for the proposed Fort Dodge Mill Dam Hydroelectric Project, located on the Des Moines River, Webster County, Iowa, and has prepared a Final Environmental Assessment (FEA) for the project. In the FEA, the Commission's staff has analyzed the potential environmental impacts of the existing project and has concluded that approval of the project, with appropriate mitigation measures, would not constitute a major federal action significantly affecting the quality of the human environment.

Copies of the FEA are available for review in the Public Reference Branch, Room 3104, of the Commission's offices at 941 North Capitol Street, N.E., Washington, D.C. 20426.

Lois D. Cashell,

Secretary

[FR Doc. 95–6457 Filed 3–15–95; 8:45 am]

BILLING CODE 6717–01–M

[Docket No. CP95–191–000]

Natural Gas Pipeline Company of America; Notice of Intent to Prepare an Environmental Assessment for the Proposed OK–TEX AMARILLO PROJECT and Request for Comments on Environmental Issues

March 10, 1995.

The staff of the Federal Energy Regulatory Commission (FERC or the Commission) will prepare an environmental assessment (EA) that will discuss the environmental impacts of the construction and operation of facilities proposed in the OK–TEX

Amarillo Project.[1] This EA will be used by the Commission in its decision-making process to determine if an environmental impact statement is necessary and whether to approve the project.

Summary of the Proposed Project

Natural Gas Pipeline Company of America (Natural) requests Commission authorization to:

- Abandon by transfer 102.7 miles of its Amarillo No. 1 pipeline comprising:
  - —About 99.93 miles of 24-inch-diameter pipeline in Beaver County, Oklahoma, and Ochiltree, Hansford and Hutchinson Counties, Texas; and
  - —About 2.74 miles of 30-inch-diameter pipeline in Hutchinson County, Texas.
- Construct and operate approximately 18.0 miles of 30-inch-diameter loop in Hutchinson County, Texas.

The Amarillo No. 1 pipeline is part of the Amarillo mainline system that extends north from gas producing areas in north central Texas through New Mexico, Oklahoma, Texas, Kansas, Nebraska, and Iowa, and terminates near Chicago, Illinois. In 1982, Natural began a long-range program (the Amarillo Upgrade Program) to replace its original 24-inch-diameter Amarillo No. 1 pipeline. The purpose of the Amarillo Upgrade Program is to increase reliability of Natural's services and reduce operating costs by eliminating or replacing parts of the Amarillo mainline system that are obsolete.[2] No existing customer services would be affected by the proposed project.

Natural proposes to transfer all abandoned pipeline to MidCon Gas Products Corporation which would operate it as a low-pressure gathering pipeline. As a low-pressure pipeline, the Amarillo No. 1 pipeline would collect gas at the wellhead and transport it south for processing at a plant near Natural's Compressor Station 112 in Moore County, Texas. The processed gas would then be delivered to Natural's Amarillo mainline system for transportation north. Natural contends that, although the Amarillo No. 1 pipeline is obsolete for use as part of a high-pressure interstate pipeline system, the pipeline would be suitable for use as a low-pressure gathering line. Since the transfer would result in continued use of the pipeline, the pipeline would not be removed.

Natural proposes to construct and operate approximately 18.0 miles of pipeline to partially replace the abandoned pipeline and maintain service to its customers.

The general location of the project facilities is shown in appendix 1. A detailed location map of the proposed loop is shown in appendix 2.[3]

Land Requirements for Construction

No land would be affected by abandonment of the Amarillo No. 1 pipeline since the pipeline would be abandoned in place for use as a low-pressure pipeline.

Natural proposes to construct the proposed loop within a nominal 75-foot-wide right-of-way that would be offset 50 feet from the existing pipeline. Extra temporary work space would also be required for topsoil segregation; for staging areas at road, wetland and stream crossing; equipment mobilization; and contractor and pipe storage yards. Construction would affect a minimum of 163.4 acres of range and agricultural land based on a 75-foot-wide construction right-of-way. In addition, Natural anticipates using one 4-acre storage yard.

Following construction, Natural proposes to maintain the loop within a 75-foot-wide permanent right-of-way centered on the pipeline. All temporary construction right-of-way and extra work spaces would be restored and allowed to revert to their former use.

The EA Process

The National Environmental Policy Act (NEPA) requires the Commission to take into account the environmental impacts that could result from an action whenever it considers the issuance of A Certificate of Public Convenience and Necessity. NEPA also requires us to discover and address concerns the public may have about proposals. We call this ''scoping''. The main goal of the scoping process is to focus the analysis in the EA on the important environmental issues. By this Notice of Intent, the Commission requests public comments on the scope of the issues it will address in the EA. All comments received are considered during the preparation of the EA. State and local government representatives are encouraged to notify their constituents of this proposed action and encourage them to comment on their areas of concern.

The EA will discuss impacts that could occur as a result of the construction and operation of the proposed project under these general headings:

- Geology and soils.
- Water resources, fisheries, and wetlands.
- Vegetation and wildlife.
- Public safety.
- Land use.
- Cultural resources.
- Endangered and threatened species.

We will also evaluate possible alternatives to the proposed project or portions of the project, and make recommendations on how to lessen or avoid impacts on the various resource areas.

Our independent analysis of the issues will be in the EA. Depending on the comments received during the scoping process, the EA may be published and mailed to Federal, state, and local agencies, public interest groups, interested individuals, affected landowners, newspapers, libraries, and the Commission's official service list for this proceeding. A comment period will be allotted for review if the EA is published. We will consider all comments on the EA before we recommend that the Commission approve or not approve the project.

Currently Identified Environmental Issues

We have already identified the following issues that we think deserve attention based on a preliminary review of the proposed facilities and the environmental information provided by Natural. Keep in mind that this is a preliminary list. The list of issues may be added to, subtracted from, or changed based on your comments and our analysis. Issues are:

- The proposed loop would cross Camp Creek.
- The proposed loop would cross three wetlands.
- Natural's proposed 50-foot-offset from the old pipeline and Natural's proposed 75-foot-wide permanent right-of-way.

Public Participation

You can make a difference by sending a letter addressing your specific comments or concerns about the project. You should focus on the potential

[1] Natural Gas Pipeline Company of America's application was filed with the Commission under Section 7 of the Natural Gas Act and Part 157 of the Commission's regulations.

[2] Natural has previously received Commission authorization to abandon and/or replace segments of the Amarillo No. 1 pipeline and compression facilities in Docket Nos. CP83–194–000, CP84–16–000, CP84–466–000, CP84–518–000, CP92–303–000, CP92–611–000, and CP93–672–000. Abandonment and replacement of the remaining facilities are currently under Commission review in Docket Nos. CP93–672–001 and CP94–577–001.

[3] The appendices referenced in this notice are not being printed in the **Federal Register**. Copies are available from the Commission's Public Reference and Files Maintenance Branch, Room 3104, 941 North Capitol Street, N.E., Washington, D.C. 20426, or call (202) 208–1371. Copies of the appendices were sent to all those receiving this notice in the mail.

environmental effects of the proposal, alternatives to the proposal (including alternative routes), and measures to avoid or lessen environmental impact. The more specific your comments, the more useful they will be. Please follow the instructions below to ensure that your comments are received and properly recorded:

- Address your letter to: Lois Cashell, Secretary, Federal Energy Regulatory Commission, 825 North Capitol St., N.E., Washington, D.C. 20426;
- Reference docket No. CP95–191–000;
- Send a *copy* of your letter to: Mr. Mark Jensen, EA Project Manager, Federal Energy Regulatory Commission, 825 North Capitol Street., N.E., Room 7312, Washington, D.C. 20426; and
- Mail your comments so that they will be received in Washington, D.C. on or before April 17, 1995.

If you wish to receive a copy of the EA, you should request one from Mr. Jensen at the above address.

Becoming an Intervenor

In addition to involvement in the EA scoping process, you may want to become an official party to the proceeding or become an ''intervenor''. Among other things, intervenors have the right to receive copies of case-related Commission documents and filings by other intervenors. Likewise, each intervenor must provide copies of its filings to all other parties. If you want to become an intervenor you must file a Motion to Intervene according to Rule 214 of the Commission's Rules of Practice and Procedure (18 CFR 385.214) (see appendix 3).

The date for filing timely motions to intervene in this proceeding has passed. Therefore, parties now seeking to file late interventions must show good cause, as required by section 385.214(b)(3), why this time limitation should be waived. Environmental issues have been viewed as good cause for late intervention. You do not need intervenor status to have your scoping comments considered.

Additional information about the proposed project is available from Mr. Mark Jensen, EA Project Manager, at (202) 208—0828.

Lois D. Cashell,

Secretary.

[FR Doc. 95–6456 Filed 3–15–95; 8:45 am]

BILLING CODE 6717–01–M

[Docket No. RM95–6–000]

Alternatives to Traditional Cost-of-Service Ratemaking for Natural Gas Pipelines; Notice of Extension of Time

March 10, 1995.

On March 3, 1995, the Interstate Natural Gas Association of America, the America Gas Association, the Associated Gas Distributors, the Independent Petroleum Association of America, and the Natural Gas Supply Association (Indicated Petitioners) filed a motion for an extension of time within which to file comments and responses to questions raised in the Commission's Request for Comments issued February 8, 1995 (60 FR 8356, February 14, 1995), in the above-docketed proceeding. In its motion, Indicated Petitioners states that due to the complex nature of the subject matter and the numerous questions raised by the Request for Comments and the Staff Paper dealing with market-based rates, additional time is needed to analyze, prepare, and file comments. The motion also states that a modest extension is in the public interest and will not unnecessarily delay the proceeding.

Upon consideration, notice is hereby given that an extension of time within which to file comments in this proceeding is granted to and including April 25, 1995.

Lois D. Cashell,

Secretary.

[FR Doc. 95–6486 Filed 3–15–95; 8:45 am]

BILLING CODE 6717–01–M

ENVIRONMENTAL PROTECTION AGENCY

[FRL–5173–2]

Office of Environmental Justice and the Office of Civil Rights Solicitation Notice for Fiscal Year (FY) 1995; Environmental Justice Community/ University Partnership Grants Program

Purpose of Notice

The purpose of this notice is to solicit applications from eligible candidates under the Environmental Justice Community/University Partnership Grants Program of the Environmental Protection Agency.

Grants Program Overview

The grants program was established to help community groups to efficiently address local environmental justice issues through active partnerships with institutions of higher education, such as Historically Black Colleges and Universities (HBCUs), Hispanic Serving Institutions (HSIs), Tribal Colleges (TC) and institutions of higher education serving Asian-American (AA) and other minority or low-income communities. Executive Orders 12876 (HBCUs) and Executive Order 12900 (Educational Excellence for Hispanic Americans) are designed to futher opportunities for HBCU participation in Federal programs and for Hispanic American participation in Federal education programs. This grants program will further the Agency's commitment, as expressed in its March 14,1994 reaffirmation of EPA's 1984 Indian Policy, to develop a stronger partnership with Tribal governments in protecting the environment.

Under this program, EPA will emphasize meaningful, fully interactive two-way cooperation between communities and HBCUs, HSIs, TCs, and institutions of higher education serving Asian-Americans and other minority or low-income communities, to address environmental justice issues (e.g., waste sites that are polluting water bodies, or pesticide contamination of farm workers), and to identify pollution sources, train residents on their rights and responsibilities, and help to resolve environmental problems. Partnerships must be established with formal agreements (ie. Memorandum of Understanding) between a University or College and at least one socio-economically disadvantaged community which is adversely impacted by an environmental hazard. Participation by these institutions and communities in government programs is advanced by expanding community outreach, and providing training, and education. These initiatives become the catalyst for increasing environmental awareness and involvement in resolving environmental problems such as exposure to environmental pollutants in minority and low-income populations.

The main objective of the program is to link members of a community, who are directly affected by adverse environmental conditions with an academic institution's staff. This effort is designed to ensure that both:

- are aware of basic environmental regulations, laws, concepts, issues, and resources;
- understand their role in identifying and defining problems, and monitoring contaminants related to environmental exposures;
- are included in the dialogue that results in shaping future policies, guidances, and approaches to problem solving; and
- are encouraged to be active partners in developing responses and setting priorities for intervention and legal recourse.

Through these partnerships, communities will be encouraged to become involved in accessing information from environmental databases, in cleaning-up and restoring communities that have environmental insults, and in surveying and monitoring environmental quality.

Number of Grants Proposed: A minimum of four grants will be awarded for the fiscal year 1995.

Grant Award Amount: $300,000 to each award recipient contingent upon the availability of funds. Work funded by this program is expected to begin upon award of the grant. All grants under this notice are expected to be awarded by September 1995.

Grant Term: The term of the grant is one year. However, the EPA reserves the right to offer the grantee a renewal not to exceed one additional year, provided that conditions within the Agency remain the same and funds are available.

Eligibility

Participation is limited to institutions of higher education, including Historically Black Colleges or Universities (HBCUs), Hispanic Serving Institutions (HSIs), institutions of higher education serving Asian-American (AA's) and other minority or low-income communities, and Tribal Colleges (TCs) which have formal partnerships (i.e., a signed agreement or Memorandum of Understanding) with any affected community group which is eligible under applicable statutory authorities (for example, community-based / grassroots organizations, churches, schools or other non-profit community organizations) and Tribal governments.

The Environmental Justice Community/University Partnership Grants Program may be either a single institution or consortium. If a consortium is proposed, the lead institution must be identified and be one of the eligible applicants. This lead institution is recognized as the grantee and as such is responsible for all activities under the agreement.

Statutory Authority(ies): the granting authority is multi-media and the grant proposal must address two or more of the statutory requirements.

Clean Water Act, Section 104(b)(3)
Solid Waste Disposal Act, Section 8001(a)
Clean Air Act, Section 103(b)(3)
Marine Protection, Research and Sanctuaries Act, Section 203
Toxic Substances Control Act, Section 10(a)
Safe Drinking Water Act, Section 1442(b)(3)

Application Instructions—Applications will serve as the sole basis for evaluation and recommendation for funding. This notice contains all information and forms necessary to submit an application.

Application deadline: Applications must be received or postmarked no later than midnight, May 17, 1995.

Applications must be mailed to: United States Environmental Protection Agency, Grants Administration Division, Mail Code 3903F, Environmental Justice Community/University, Partnership Grants, 401 M Street S.W., Washington, D.C. 20460.

All Applications must be sent to the headquarters address.

Background

In its 1992 report, *Environmental Equity: Reducing Risk for All Communities,* EPA found that people of color and low-income communities experience higher than average exposure to toxic pollutants than the general population. The Office of Environmental Justice (OEJ) was established in 1992 to help these communities identify and assess pollution sources, implement environmental awareness and training programs for affected residents and work with local stakeholders (community-based organizations, academia, industry, local governments) to devise strategies for environmental improvements.

In June of 1993, OEJ was delegated granting authority to solicit projects, select suitable projects from among those proposed, supervise such projects, evaluate the results of projects, and disseminate information on the effectiveness of the projects, and feasibility of the practices, methods, techniques and processes in environmental justice areas.

General

The following questions and answers are designed to respond to frequent concerns of applicants.

A. What Is the Purpose of the Environmental Justice Community/University Partnership Grants Program?

The purpose of this grants program is to provide financial assistance to institutions of higher education, including HBCU's, HSI's, AA's and TC's, to establish or enhance environmental justice outreach programs with community groups. The University/Colleges shall support affected environmental justice community groups (community-based/grassroots organizations, churches, schools, or other non-profit community organizations) and tribal governments who engage in or plan to carry out projects that address environmental justice issues. The Universities/Colleges that focus on the design, methods, and techniques to evaluate and solve environmental justice issues of concern to affected communities will be given priority.

B. What Specific Requirements Exist for the Environmental Justice Community/University Partnership Grants Program?

The Environmental Justice Community/University Partnership Grants Program shall include, but not be limited to:

1. Design and demonstration of field methods, practices, and techniques, including assessment and analysis of environmental justice conditions and problems which may have a wide applicability and/or addresses a high priority environmental justice issue (e.g., socioeconomic impact studies, natural resource clean-up efforts);

2. Research projects to understand, assess or address, regional and local trends in environmental justice issues or problems (e.g., monitoring of socioeconomic changes in a community as a result of an environmental abuse);

3. Demonstration or dissemination of environmental justice information, including development of educational tools and materials (e.g. establish an Environmental Justice Clearinghouse of successful environmental justice projects and activities or teach about risk reduction, pollution prevention, or ecosystem protection as potential strategies for addressing environmental justice problems or issues);

4. Determine the necessary improvements in communication and coordination among local, state and tribal environmental programs and facilitate communication, information exchange, and community partnerships among all stakeholders to enhance critical thinking, problem solving, and decision making;

5. Provide technical expert consultation for accessing, analyzing, and interpreting public environmental data (e.g., TRI, GIS, etc.);

6. Provide for a minimal ''hard science'' analysis capability (e.g. analyze water and soil samples to test for basic pollutants, provide radon testing kits); In addition, the following items must be addressed;

7. Projects should involve new and innovative approaches and/or significant new combinations of resources, both of which should be identified in the partnership agreements;

8. An applicant is required to include in the application a signed agreement which describes the role of the prospective partner(s) in the project and its implementation, and which includes a commitment or intent to commit resources from the prospective partner(s) contingent only upon receipt of funds. Where appropriate the University may identify community residents as part of the partnership team and the residents may be compensated for this effort; and

9. Applications should include partnerships between universities, colleges, or tribal colleges which are providers of training and programs for these communities. One of the goals of the partnerships should be a developing shift of focus within these organizations from maintenance to that of self-sufficiency;

C. What does Environmental Justice Involve Under the Environmental Justice Community/University Partnership Grant?

Environmental justice involves the fair treatment of people of all races, cultures, and income with respect to the development, implementation, and enforcement of environmental laws, regulations, and policies. It seeks to ensure that the communities, private industry, local governments, states, tribes, federal government, grassroots organizations, and individuals act responsibly and environmental protection to all communities. Environmental justice efforts may include, but are not necessarily limited to enhancing the gathering, observing, measuring, classifying, experimenting and other data gathering techniques that assist individuals in discussing, inferring, predicting, and interpreting information about environmental justice issues and concerns. Environmental justice projects or activities should enhance critical thinking, problem solving, and effective decision-making skills.

D. Who May Submit An Application?

Any institution of higher education, including Historically Black College or University (HBCU), Hispanic Serving Institutions (HSI), Tribal Colleges (TC), and institutions of higher education serving Asian-American (AA) and other minority or low-income communities, may submit an application upon publication of this solicitation. University consortiums are eligible to apply.

Given the limited funding available for this grant program, priority will be given to applicants with a demonstrated capacity to develop partnerships with socioeconomically disadvantaged communities.

E. May An Individual Apply?

No. Only institutions of higher education may apply. The professional qualifications or community-based experience of those individuals participating in the proposed project will be an important factor in the selection process.

Funding Priorities

F. What Types of Proposed Environmental Justice Community/University Partnerships Will Have the Best Chance of Being Funded?

The Environmental Justice Community/University Partnerships must meet the objectives and criteria spelled out in section B.

G. Are Matching Funds Required?

Yes. Federal funds for the Environmental Justice Community/University Partnerships shall not exceed 95% of the total cost of the project. EPA encourages non-Federal matching shares of greater than 5%. The non-Federal share of costs may be provided in cash or by in-kind contributions and other non-cash support. In-kind contributions often include salaries or other verifiable costs. In the case of salaries, applicants may use either minimum wage or fair market value. The proposed match, including the value of in-kind contributions, is subject to negotiation with EPA. All grants are subject to audit, so the value of in- kind contributions *must be carefully documented.*

The matching (non-Federal) share is a percentage of the entire cost of the project. For example, if the total project cost is approximately $315,000 then the Federal portion can be no more than $300,000, which is 95% of the total project cost. For this example, the grant recipient would be required to provide $15,000 for the project. The amount of non-Federal funds, including in-kind contributions, must be briefly itemized in Block 15 of the application form (SF 424) included at the end of this notice. Among other things, *EPA funds cannot be used* as matching funds for other Federal grant match requirements, for construction, or buying furniture.

Application Procedure

An ''Application for Federal Assistance'' form (Standard Form 424 or SF 424), a ''Budget Information: Non-Construction Programs'' form (SF 424a), and a Work Plan (described below) must be submitted. These documents contain all the information EPA needs to evaluate the merits of your proposed grant proposal.

Each instrument approved under the environmental justice delegation must be consistent with the Federal Grant and Cooperative Agreements Act of 1977, Public Law 95–224, as amended, 31 U.S.C. Section 6301; Title 40 of the Code of Federal Regulations, Parts 30,31,33,40,45 and 47, as appropriate; and existing media-specific regulations pertinent to the statement of work.

H. How Must the Application Be Submitted and Specifically What Must the Standard Form (SF) 424, Standard Form (SF) 424, and Work Plan Include?

The applicant must submit one original, signed by a person authorized to receive funds for the applicant, and two copies of the application (double-sided copies encouraged). Applications must be reproducible (for example; stapled once in the upper left hand corner, on white paper, and with page numbers).

As described above, an application contains an SF 424 and a work plan. The following describes what an SF 424 and a work plan are and what they must contain.

1. APPLICATION FOR FEDERAL ASSISTANCE (SF 424). An SF 424 is an official form required for all Federal grants. A completed SF 424 must be submitted as part of your preapplication. This form, along with instructions are included at the end of this notice.

2. BUDGET INFORMATION: NON-CONSTRUCTION PROGRAMS (SF 424A). An SF- 424A is an official form required for all Federal grants. A completed SF 424A must be submitted as part of your application. This form, along with instructions are included at the end of this notice.

3. QUALITY ASSURANCE PLAN. It is not necessary to prepare such a plan in response to this solicitation.

4. NECESSARY SIGNED FORMS. Procurement Systems Certification, Certification Regarding Debarment, Suspension and Other Responsibility Matters, Certification Regarding Lobbying. These forms are provided in the grant package.

5. WORK PLAN. A work plan describes the applicant's proposed project. Work plans must be no more than 15 pages total. One page is one side of a single spaced typed page. The pages must be letter size (8 ½ x 11), with normal type size (19 or 12 cpi) and at least 1'' margins. The only appendices and letters of support that EPA will accept are a budget, resumes of key personnel, and commitment letters, and an agreement signed between one or

more community organizations and the applicant university.

Work plans must be submitted in the format described below. The percentages next to the items are the weights EPA will use to evaluate the applicant's work plan. Please note that certain sections are given greater weight than others.

(a.) A concise introduction of no more than 3 pages that states the nature of the college or university, how the college or university has been successful in the past, proposed uses, objectives, methods, plans, target audiences, and expected results of the proposed project. (10%)

(b.) Clear and concise description of the project which describes the following:

(1.) A section describing the field methods, practices, and techniques, including assessment and analysis, which the partnership expects to implement. (10%)

(2.) A section discussing how the partnerships will assess or address national, regional and local environmental justice issues. (10%)

(3.) A section describing how the partnerships will disseminate environmental justice information, including educational tools and materials. (10%)

(4.) A section describing how the partnerships will improve communications and coordination among local, state, tribal and federal environmental programs and how the partnership will enhance critical thinking, problem solving and decision making among all stakeholders. Specify effective and realistic methods for involving members of the targeted population. (10%)

(5.) A section describing who or how the partnership will obtain expert consultation to access, analyze and interpret public environmental data. (10%)

(6.) A section describing the ''hard science'' analysis capability of the University, college or organization. (10%)

(c.) A conclusion discussing how the applicant will evaluate the success of the partnership, in terms of the anticipated strengths and challenges in developing and administering the partnership. (10%)

(d.) An appendix with a budget describing how funds will be used in terms of personnel, fringe benefits, travel, equipment, supplies, contract costs, and other. Funds can not be used for construction. The budget must list proposed milestones with deadlines and estimated cost and completion dates. All costs must be consistent with the Office of Management and Budget (OMB) cost principles, such as A–87 and A–122. (10)%

(e.) An appendix with one or two page resumes of up to five key personnel. (5%)

(f.) An appendix with one page letters of commitment from community-based organizations with a significant role in the developing and administration of the partnership. Letters of endorsement will not be considered. (5%)

I. When and Where Must Application Be Submitted?

An original plus two copies of the application must be mailed to EPA postmarked no later than Monday, May 17, 1995. Applications must be submitted to: United States Environmental Protection Agency, Grants Administration Division, Mail Code 3903F, Environmental Justice Community/University, Partnership Grants, 401 M Street SW., Washington, D.C. 20460.

Review and Selection Process

J. How Will Applications be Reviewed?

EPA's Office of Environmental Justice will form a selections committee comprised of EPA Headquarters and Regional environmental justice personnel to evaluate proposals and make selections. Applications will be screened to ensure they meet all eligible activities described in Sections A through I. Reviewers will specifically evaluate the degree to which the applications meet EPA's objectives and criteria as discussed in section H.5(a–f). Applications will be disqualified if they are incomplete or do not meet EPA's basic criteria.

K. How Will the Final Selections Be Made?

After the applications are reviewed and ranked as described in section J, EPA officials will compare the best applications and make final selections. Factors EPA will take into account include: geographic and socioeconomic balance, diversity, cost and if the partnerships benefits can be sustained after the grant is completed.

L. How Will Applicants Be Notified?

After all applications are received, EPA will mail acknowledgements to each applicant. Once applications have been recommended for funding, EPA will notify those applicants selected and request any additional information necessary to complete the award process. The EPA Office of Environmental Justice will notify those applicants whose grant applications were not selected for funding.

Post-Award

M. When Should the Proposed Partnership Begin Functioning?

Partnerships cannot operate or begin development on this specific project before funds are awarded. Start dates are currently targeted for September 1, 1995. It is EPA's intent to fund each center for one year. Future funding will be dependent upon appropriations.

N. How Much Time Does Grant Recipient Have To Complete the Work Proposed?

Activities must be completed within the time frame specified in the grant award, usually one year from award date.

O. Who Will Develop and Manage the Partnerships?

EPA requires that partnerships be developed and managed by the applicant or by persons satisfactory to the applicant and EPA. All applications must identify any person other than the applicant for approval by EPA.

P. What Reports Must Grant Recipients Complete?

Recipients of grants will be expected to report on quarterly progress, as well as final project completion. All recipients must submit final reports for EPA approval prior to the expiration of the project period. Specific report requirements will be detailed in the award agreement. EPA plans to collect, evaluate, and disseminate grantees' final reports to serve as model programs. Since networking is crucial to the success of the program, grantees may be asked to transmit an extra copy to a central collect on point.

Q. What Is the Expected Time Frame for the Review and Awarding of the Grants?

March 17, 1995—Request for Applications Notice (RFA) is published in the **Federal Register**.

March 17, 1995–May 16, 1995—Eligible grant recipients develop their proposals.

May 17, 1995—Proposals must be postmarked for or received by EPA Office of Environmental Justice by this date.

May 17, 1995–July 15, 1995—EPA officials review and select grants.

July 15, 1995–September 1, 1995—EPA grants division processes grants and makes awards. Applicants will be contacted by the grants office if their proposal were selected for funding. Additional information may be required from the selectees, as described in Section N above.

September 1, 1995—EPA anticipates the beginning of the Partnership development on or around this date.

Fiscal Year 1996 and Future Year Grants

To Receive Information on the Fiscal Year 1996 Environmental Justice Community/University Partnership Grants Program and Future Year Grants, You must mail your request along with your name, organization, address and phone number to: Office of Environmental Justice (3103), U.S. Environmental Protection Agency, Environmental Justice Community/University Partnership Grants 1996, 401 M Street S.W., Washington, DC 20460, FAX: (202) 260–0852.

Available Translations

A Spanish translation of this announcement is available upon request. Please call the Office of Environmental Justice at 1–800–962–6215 for a copy.

Hay traducciones disponibles en espanol. Si usted esta interesado en obtener una traduccion de este anunclo en espanol, por favor llame a la Officina de Justicia Ambiental conocida como ''Office of Environmental Justice'', linea de emergencia (1–800–962–6215).

Dated: March 10, 1995.

Clarice E. Gaylord,

Director, Office of Environmental Justice.

[FR Doc. 95–6505 Filed 3–15–95; 8:45 am]

BILLING CODE 6560–50–P

FEDERAL DEPOSIT INSURANCE CORPORATION

Information Collection Submitted to OMB for Review

AGENCY: Federal Deposit Insurance Corporation.

ACTION: Notice of information collection submitted to OMB for review and approval under the Paperwork Reduction Act of 1980.

SUMMARY: In accordance with requirements of the Paperwork Reduction Act of 1980 (44 U.S.C. Chapter 35), the FDIC hereby gives notice that it has submitted to the Office of Management and Budget a request for OMB review of the information collection system described below.

Type of review: Revision of a currently approved collection.

Title: Country Exposure Report.

Form number: FFIEC 009, 009a.

OMB number: 3064–0017.

Expiration date of OMB clearance: April 30, 1995.

Respondents: Insured state nonmember banks with country exposures over $30 million that are large relative to capital (as determined by the FDIC).

Frequency of response: Quarterly.

Number of respondents: 38.

Number of responses per respondent: 4.

Total annual responses: 152.

Average number of hours per response: 26.

Total annual burden hours: 3,952.

OMB reviewer: Milo Sunderhauf, (202) 395–7340, Office of Management and Budget, Paperwork Reduction Project 3064–0017, Washington, DC 20503.

FDIC contact: Steven F. Hanft, (202) 898–3907, Office of the Executive Secretary Room F–400, Federal Deposit Insurance Corporation, 550 17th Street NW., Washington, DC 20429.

Comments: Comments on this collection of information are welcome and should be submitted before March 31, 1995.

ADDRESSES: A copy of the submission may be obtained by calling or writing the FDIC contact listed above. Comments regarding the submission should be addressed to both the OMB reviewer and the FDIC contact listed above.

SUPPLEMENTARY INFORMATION: The Country Exposure Report provides information on the amounts and composition of international assets held by U.S. banks. The reporting requirement is pursuant to section 907(a) of the International Lending Supervision Act, which requires state nonmember banks to submit their reports to the FDIC. Individual bank data are used for supervisory and statistical purposes. Aggregate data are published for use by the general public, banks, government agencies, and international organizations. The revisions proposed in this request to OMB would simplify the form and reduce the reporting burden.

Dated: March 10, 1995.

Federal Deposit Insurance Corporation.

Robert E. Feldman,

Acting Executive Secretary.

[FR Doc. 95–6436 Filed 3–15–95; 8:45 am]

BILLING CODE 6714–01–M

FEDERAL LABOR RELATIONS AUTHORITY

Federal Service Labor-Management Relations Statute; Collective Bargaining; Comment Solicitation for Policy Statement

AGENCY: Federal Labor Relations Authority.

ACTION: Notice relating to the issuance of a policy statement.

SUMMARY: This notice solicits written comments on questions to assist the Authority in determining whether to issue a ruling on a major policy issue regarding the scope of collective bargaining under the Federal Service Labor-Management Relations Statute, 5 U.S.C. 7101–7135 (1988) (the ''Statute'') and, if the Authority issues such ruling, what it should be.

DATES: Written comments received in the Authority's Case Control Office by the close of business on April 17, 1995, will be considered. Extensions of time will not be granted.

ADDRESSES: Send written comments to the Federal Labor Relations Authority, 607 14th Street, NW., Room 415, Washington, DC 20424.

FOR FURTHER INFORMATION CONTACT: Alicia N. Columna, Director, Case Control Office, 607 14th Street, NW., Washington, DC, 20424. Telephone: (202) 482–6540.

SUPPLEMENTARY INFORMATION: Joseph Swerdzewski, FLRA General Counsel, has requested the Authority to issue a general ruling, under § 2429.4 of the Authority's regulations, on an issue regarding the relationship between subsections (a) and (b) of section 7106 of the Statute. Interested persons are invited to express their views in writing as to whether the Authority should issue the general ruling and, if it does, what the ruling should be.

Notice

To Heads of Agencies, Presidents of Labor Organizations and Other Interested Persons:

The General Counsel of the FLRA has requested under § 2429.4 of the Authority's regulations (5 CFR 2429.4) that the Authority issue a general ruling on the following question, as stated by the General Counsel:

> Are matters and proposals which are within the bargaining subjects set forth in section 7106(b)(1) of the Statute negotiable at the election of agency management at the level of exclusive recognition even though those matters and proposals also may be within the subjects set forth in section 7106(a) of the Statute?

The General Counsel states that the request does not require the Authority to determine: (1) Whether there is a duty to bargain over matters set forth in section 7106(b)(1); or (2) the legal impact of Executive Order 12871 on such duty. The General Counsel states further that the ''existence of the mandate of Executive Order 12871 to negotiate over subsection (b)(1) matters'' and the decision of the United States Court of Appeals for District of Columbia Circuit in *Association of Civilian Technicians, Montana Air Chapter No. 29* v. *FLRA*, 22 F.3d 1150 (DC Cir. 1994), have ''rendered the relationship between subsections (a) and (b) a major policy issue * * *.''

The issues before the Authority are whether a general ruling on the issue raised in the General Counsel's request is warranted and, if it is, what the ruling should be. Under § 2429.4 of the Authority's regulations, the Authority solicits views on these matters in writing. Written comments received in the Authority's Case Control Office by close of business on Friday, April 14, 1995, will be considered.

To assist the Authority in determining whether a general ruling on the issue raised by the General Counsel is warranted and, if so, what the ruling should be, the Authority invites comments regarding the following questions. In answering the questions, examples of proposals and matters that illustrate the views presented may be helpful.

1. Are matters and proposals which are within the bargaining subjects set forth in section 7106(b)(1) of the Statute negotiable at the election of agency management at the level of exclusive recognition even though those matters and proposals also may be within the subjects set forth in section 7106(a) of the Statute?

2. What is the proper meaning to be accorded the phrase in section 7106(a) stating that it is ''[s]ubject to subsection (b),'' as it relates to subsection (b)(1)?

3. What is the proper meaning to be accorded the phrase in section 7106(b) stating that ''Nothing in this section shall preclude any agency and any labor organization from negotiating—''? For example, does it operate with respect to section 7106(b)(1) as a ''clarification'' or a ''limitation,'' a distinction raised by the court in *American Federation of Government Employees, Local 2782* v. *FLRA*, 702 F.2d 1183, 1186–87 (DC Cir. 1983) (*dicta*)?

4. What matters or proposals, if any, within the subjects set forth in section 7106(b)(1) are not also within (i.e., do not also affect) one or more subjects set forth in section 7106(a)?

5. Does the relationship between section 7106(a) and (b)(1) depend on the particular section 7106(a) subject which is affected?

6. Does the relationship between section 7106(a) and (b)(1) depend on whether parties are bargaining over proposals for an agreement or whether an agency head is exercising authority under section 7114(c) of the Statute to review an agreement already reached?

Dated: March 13, 1995.

Federal Labor Relations Authority.

Phyllis N. Segal,

Chair.

Pamela Talkin,

Member.

Tony Armendariz,

Member.

[FR Doc. 95–6511 Filed 3–15–95; 8:45 am]

BILLING CODE 6267–01–P

FEDERAL RESERVE SYSTEM

First Security Bancorp, et al.; Formations of; Acquisitions by; and Mergers of Bank Holding Companies

The companies listed in this notice have applied for the Board's approval under section 3 of the Bank Holding Company Act (12 U.S.C. 1842) and § 225.14 of the Board's Regulation Y (12 CFR 225.14) to become a bank holding company or to acquire a bank or bank holding company. The factors that are considered in acting on the applications are set forth in section 3(c) of the Act (12 U.S.C. 1842(c)).

Each application is available for immediate inspection at the Federal Reserve Bank indicated. Once the application has been accepted for processing, it will also be available for inspection at the offices of the Board of Governors. Interested persons may express their views in writing to the Reserve Bank or to the offices of the Board of Governors. Any comment on an application that requests a hearing must include a statement of why a written presentation would not suffice in lieu of a hearing, identifying specifically any questions of fact that are in dispute and summarizing the evidence that would be presented at a hearing.

Unless otherwise noted, comments regarding each of these applications must be received not later than April 10, 1995.

A. Federal Reserve Bank of St. Louis (Randall C. Sumner, Vice President) 411 Locust Street, St. Louis, Missouri 63166:

1. First Security Bancorp, Searcy, Arkansas; to acquire 100 percent of the voting shares of Farmers Investment Corporation, Little Rock, Arkansas, and thereby indirectly acquire Farmers Bank & Trust Company, Clarksville, Arkansas.

B. Federal Reserve Bank of Minneapolis (James M. Lyon, Vice President) 250 Marquette Avenue, Minneapolis, Minnesota 55480:

1. First Community Bancorp, Inc., Glasgow, Montana; to acquire 100 percent of the voting shares of Wolf Point Acquisition Bank, Wolf Point, Montana, a *de novo* bank.

C. Federal Reserve Bank of San Francisco (Kenneth R. Binning, Director, Bank Holding Company) 101 Market Street, San Francisco, California 94105:

1. Westamerica Bancorporation, San Rafael, California; to merge with North Bay Bancorp, Novato, California, and thereby indirectly acquire Novato National Bank, Novato, California.

Board of Governors of the Federal Reserve System, March 10, 1995.

Jennifer J. Johnson,

Deputy Secretary of the Board.

[FR Doc. 95–6475 Filed 3–15–95; 8:45 am]

BILLING CODE 6210–01–F

DEPARTMENT OF HEALTH AND HUMAN SERVICES

Food and Drug Administration

[Docket No. 95F–0040]

Chemie Research and Manufacturing Co., Inc.; Filing of Food Additive Petition

AGENCY: Food and Drug Administration, HHS.

ACTION: Notice.

SUMMARY: The Food and Drug Administration (FDA) is announcing that Chemie Research and Manufacturing Co., Inc., has filed a petition proposing that the food additive regulations be amended to provide for the safe use of a glycerin extract of dried grapefruit seeds and pulp as an antimicrobial agent in the processing of fresh or frozen poultry, fish, or shellfish.

DATES: Written comments on the petitioner's environmental assessment by April 17, 1995.

ADDRESSES: Submit written comments to the Dockets Management Branch (HFA–305), Food and Drug Administration, rm. 1–23, 12420 Parklawn Dr., Rockville, MD 20857.

FOR FURTHER INFORMATION CONTACT: Dennis M. Keefe, Center for Food Safety and Applied Nutrition (HFS–206), Food and Drug Administration, 200 C St. SW., Washington, DC 20204, 202–418–3102.

SUPPLEMENTARY INFORMATION: Under the Federal Food, Drug, and Cosmetic Act

(sec. 409(b)(5) (21 U.S.C. 348(b)(5))), notice is given that a food additive petition (FAP 2A4336) has been filed by Chemie Research and Manufacturing Co., Inc., 160 Concord Dr., P.O. Box 181279, Casselberry, FL 32718–1279. The petition proposes that the food additive regulations be amended to provide for the safe use of a glycerin extract of dried grapefruit seeds and pulp as an antimicrobial agent in the processing of fresh or frozen poultry, fish, or shellfish.

The potential environmental impact of this action is being reviewed. To encourage public participation consistent with regulations promulgated under the National Environmental Policy Act (40 CFR 1501.4(b)), the agency is placing the environmental assessment submitted with the petition that is the subject of this notice on public display at the Dockets Management Branch (address above) for public review and comment. Interested persons may, on or before April 17, 1995, submit to the Dockets Management Branch (address above) written comments. Two copies of any comments are to be submitted, except that individuals may submit one copy. Comments are to be identified with the docket number found in brackets in the heading of this document. Received comments may be seen in the office above between 9 a.m. and 4 p.m., Monday through Friday. FDA will also place on display any amendments to, or comments on, the petitioners's environmental assessment without further announcement in the **Federal Register**. If, based on its review, the agency finds that an environmental impact statement is not required and this petition results in a regulation, the notice of availability of the agency's finding of no significant impact and the evidence supporting that finding will be published with the regulation in the **Federal Register** in accordance with 21 CFR 25.40(c).

Dated: March 6, 1995.

Alan M. Rulis,

Acting Director, Office of Premarket Approval, Center for Food Safety and Applied Nutrition.

[FR Doc. 95–6428 Filed 3–15–95; 8:45 am]

BILLING CODE 4160–01–F

[Docket No. 94N–0136]

New Monographs and Revisions of Certain Food Chemicals Codex Monographs; Opportunity for Public Comment

AGENCY: Food and Drug Administration, HHS.

ACTION: Notice.

SUMMARY: The Food and Drug Administration (FDA) is announcing an opportunity for public comment on pending changes to certain Food Chemicals Codex specifications monographs from the third edition and its four supplements. New monographs and additions, revisions, and corrections to current monographs are being prepared for certain substances used as food ingredients, by the National Academy of Sciences/Institute of Medicine (NAS/IOM) Committee on Food Chemicals Codex (the committee). This material will be published in the fourth edition of the Food Chemicals Codex, which is scheduled for release in March 1996. When the committee completes its review of the comments, the agency will announce the availability of copies of the new and revised monographs in a future issue of the **Federal Register**.

DATES: Written comments by April 17, 1995. The committee advises that comments received after this date cannot be considered for the fourth edition but will be considered for later supplements.

ADDRESSES: Submit written comments and supporting data and documentation to the NAS/IOM Committee on Food Chemicals Codex, National Academy of Sciences, 2101 Constitution Ave. NW., Washington, DC 20418. Submit written request for copies of the proposed new monographs and/or revisions to current monographs to NAS (address above) or the Dockets Management Branch (HFA–305), Food and Drug Administration, rm. 1–23, 12420 Parklawn Dr., Rockville, MD 20857.

FOR FURTHER INFORMATION CONTACT:

Fatima N. Johnson, Committee on Food Chemicals Codex, Food and Nutrition Board, National Academy of Sciences, 2101 Constitution Ave. NW., Washington, DC 20418, 202–334–2580; or

Paul M. Kuznesof, Center for Food Safety and Applied Nutrition (HFS–247), Food and Drug Administration, 200 C St. SW., Washington, DC 20204, 202–418–3009.

SUPPLEMENTARY INFORMATION: FDA provides contracts to NAS/IOM to support the preparation of the Food Chemicals Codex, which is a compendium of specifications for substances used as food ingredients. Before any specifications are included in a Food Chemicals Codex publication, public announcement is made in the **Federal Register**.

FDA has previously announced that the committee was considering new monographs and monograph revisions for inclusion in the fourth edition of the Food Chemicals Codex, which is now being prepared. In addition, notice and opportunity for public comment have been given on policies adopted by the committee for the fourth edition on lead and heavy metals specifications (58 FR 38129, July 15, 1993), and on arsenic specifications (59 FR 11789, March 14, 1994).

The committee will continue to provide the opportunity for public comment on intended changes in monographs by means of **Federal Register** notices before their inclusion in the fourth edition. If notice of changes is not provided, the monographs will be carried into the fourth edition unchanged from the third edition or subsequent supplements, except for minor editorial changes. Therefore, interested parties are invited to review all monographs in the third edition of the Food Chemicals Codex and its four supplements in preparation for their inclusion in the fourth edition. Interested parties should submit all suggestions with supporting documentation to the National Academy of Sciences at the above address.

FDA now gives notice that the committee is soliciting comments and information on certain proposed new monographs and revisions to certain additional current monographs. These new monographs and revisions will be published in the fourth edition of the Food Chemicals Codex. The proposed new monographs and revisions to current monographs may be seen in the Dockets Management Branch (address above) between 9 a.m. and 4 p.m., Monday through Friday. Copies of the new monographs and proposed revisions to current monographs may be obtained from NAS or the Dockets Management Branch. Requests for copies should be identified with the docket number found in brackets in the heading of this document, and it should specify the monographs desired.

FDA emphasizes, however, that it will not consider adopting and incorporating any of the committee's new monographs or monograph revisions into FDA regulations without ample opportunity for public comment. If FDA decides to propose the adoption of new monographs and changes that have received final approval of the committee, such opportunity for public comment will be announced in a future issue of the **Federal Register**.

The committee invites comments and suggestions on specifications by all interested parties on the proposed new monographs and revisions of current monographs, that follow:

I. Proposed New Monographs

Calcium acid pyrophosphate
Carbon dioxide
Dammar gum
Dried yeast
Ferrous lactate
Furcelleran
Gelatin
Glycerol ester of gum rosin
Glycerol ester of partially hydrogenated gum rosin
Magnesium gluconate
Maltitol syrup
Partially hydrolyzed proteins
Sodium potassium tripolyphosphate
Whey

II. Current Monographs to Which the Committee Proposes to Make Revisions

Acacia gum (description, heavy metals, lead)
N-Acetyl-*L*-methionine (specific rotation)
Acid hydrolysates of proteins ([formerly Acid hydrolyzed proteins] description, requirements, assay, tests)
Agar (lead)
L-Alanine (specific rotation)
Alginic acid (heavy metals, lead)
Ammonium alginate (heavy metals, lead)
Annatto extracts (identification, heavy metals, residual solvent, packaging and storage)
L-Arginine (specific rotation, loss on drying)
L-Arginine monohydrochloride (assay, specific rotation)
Ascorbic acid (functional use in foods, identification, tests)
L-Asparagine (loss on drying)
Benzoyl peroxide (heavy metals)
Butadiene-styrene 50/50 rubber (description, heavy metals, lithium, residual hexane)
Butadiene-styrene 75/25 rubber (description, heavy metals)
Calcium alginate (ash, heavy metals, lead)
Calcium glycerophosphate (heavy metals)
Calcium lactobionate (numerous changes)
Calcium pantothenate (heavy metals, tests)
Calcium silicate (heavy metals, lead)
Calcium peroxide (heavy metals)
Calcium pantothenate, racemic (heavy metals)
Calcium phosphate, dibasic (formula weight, functional use in foods, assay, fluoride, heavy metals, lead)
Calcium phosphate, monobasic (formula weight, fluoride, heavy metals, lead, labeling)
Calcium phosphate, tribasic (synonym, functional use in foods, fluoride, heavy metals, lead)
Canola oil (linolenic acid)
Carmine (description, assay)
β-Carotene (description, identification, loss on drying, melting range, solution in chloroform)
Cholic acid (assay, heavy metals, specific rotation)
Choline chloride (heavy metals, lead)
Choline bitartrate (heavy metals, lead)
Copper gluconate (identification)
Corn oil (Unhydrogenated) (identification)
L-Cysteine Monohydrochloride (specific rotation)
L-Cystine (loss on drying)
Desoxycholic acid (assay, heavy metals)
Dexpanthenol (identification)
Dextrose (chloride)
Dimethylpolysiloxane (identification)
Enzyme preparations (numerous changes)
FD & C Blue No. 1 (description, identification, mercury, subsidiary colors)
FD & C Blue No. 2 (description, identification, subsidiary and isomeric colors)
FD & C Green No. 3 (description, identification, subsidiary colors)
FD & C Red No. 3 (description, mercury, uncombined intermediates and products of side reactions)
FD & C Red No. 40 (mercury)
FD & C Yellow No. 5 (description, ether extracts, subsidiary colors, uncombined intermediates and products of side reactions)
FD & C Yellow No. 6 (description, subsidiary colors, total color, uncombined intermediates and products of side reactions)
Ferric phosphate (lead)
Ferric pyrophosphate (lead)
Ferrous gluconate (identification, assay, lead)
Ferrous fumarate (lead)
Gellan gum (ash, heavy metals)
L-Glutamic acid (residue on ignition, loss on drying, specific rotation)
L-Glutamic acid hydrochloride (assay)
L-Glutamine (identification, assay, loss on drying)
Glycerin (identification; assay; acrolein, glucose, and ammonium compounds)
Glycerol ester of wood rosin (heavy metals, lead)
Glycerol ester of polymerized rosin (heavy metals, lead)
Glycerol ester of partially dimerized rosin (heavy metals, lead)
Glycerol ester of tall oil rosin (heavy metals, lead)
Glycerol ester of partially hydrogenated wood rosin (heavy metals, lead)
Glyceryl-lacto esters of fatty acids (name change)
Glycine (assay, loss on drying)
Grape skin extract (assay, arsenic, sulfur dioxide, packaging and storage)
Guar gum (acid-insoluble matter, galactomannans, lead, loss on drying, protein)
Gum Ghatti (heavy metals, lead)
High-fructose corn syrup (assay, lead, total solids, labeling)
L-Histidine (specific rotation)
L-Histidine monohydrochloride (assay, loss on drying)
Hydroxylated lecithin (heavy metals)
Invert sugar (total solids)
L-Isoleucine (specific rotation)
Karaya gum (heavy metals, insoluble matter, lead, loss on drying)
Kelp (heavy metals)
Lanolin, anhydrous (heavy metals)
Lecithin (heavy metals)
L-Leucine (loss on drying)
Limestone, ground (heavy metals, mercury)
Locust (carob) bean gum (lead)
L-Lysine monohydrochloride (specific rotation, assay)
Magnesium stearate (assay, heavy metals)
Magnesium silicate (description, heavy metals)
Manganese gluconate (numerous changes)
Manganese sulfate (heavy metals)
Manganese glycerophosphate (identification, assay, heavy metals)
Manganese hypophosphite (heavy metals)
Mannitol (identification, assay, heavy metals, melting range, specific rotation)
Masticatory substances, natural (heavy metals)
DL-Methionine (assay, loss on drying)
L-Methionine (assay, heavy metals specific rotation)
Methyl ester of rosin, partially hydrogenated (heavy metals)
Methyl formate (delete monograph from the Food Chemicals Codex)
Mineral oil, white (sulfur compounds)
Monoglyceride citrate (description)
Monopotassium *L*-Glutamate (loss on drying)
Niacinamide (identification, heavy metals)
Paraffin, synthetic (heavy metals)
Pectins (umerous changes)
Pentaerythritol ester of partially hydrogenated wood rosin (heavy metals)
Pentaerythritol ester of wood rosin (heavy metals)
Petroleum wax (synonym, description, identification, functional use in foods, heavy metals, lead, ultraviolet absorbance, packaging and storage)
Petroleum wax, synthetic (synonym, description, heavy metals, lead, ultraviolet absorbance)
DL-Phenylalanine (loss on drying)
L-Phenylalanine (loss on drying, specific rotation)
Polyisobutylene (heavy metals)
Polypropylene glycol (residue on ignition)
Potassium alginate (ash, heavy metals, lead, loss on drying)
Potassium chloride (description, assay)
Potassium gluconate (identification, loss on drying)
Potassium glycerophosphate (identification)
L-Proline (description, specific rotation)
Propylene glycol (identification, acidity, heavy metals)
Pyridoxine hydrochloride (assay, heavy metals)
Riboflavin 5'-phosphate sodium (assay, free riboflavin, riboflavin diphosphate)
Riboflavin (description, specific rotation)
L-Serine (specific rotation)
Sodium acid pyrophosphate (assay, heavy metals, lead)
Sodium alginate (ash, heavy metals, lead, loss on drying)
Sodium aluminosilicate (lead)
Sodium aluminum phosphate, acidic (assay, heavy metals, lead)
Sodium chloride (heavy metals)
Sodium erythorbate (heavy metals, lead)
Sodium gluconate (identification, assay)
Sodium magnesium aluminosilicate (lead)
Sodium phosphate, tribasic (description)
Sodium polyphosphates, glassy (description)
Sorbitan monostearate (identification, assay)
Sorbitol (identification, chloride, heavy metals, lead, sulfate)
Sorbitol solution (identification, chloride, heavy metals, lead, reducing sugars, sulfate)
Soybean oil (unhydrogenated) (identification)
Spice oleoresins (heavy metals; oleoresin paprika: additional requirements)
Sucrose (calculation formula for invert sugar)

Sunflower oil (unhydrogenated) (identification)
Talc (description, identification, extractable fluoride)
Tannic acid (definition, heavy metals, loss on drying)
Terpene resin, natural (heavy metals)
Terpene resin, synthetic (heavy metals)
Thiamine mononitrate (assay)
Thiamine hydrochloride (assay)
L-Threonine (specific rotation)
DL-α-Tocopherol (lead, heavy metals)
d-α-Tocopherol concentrate (description, heavy metals, lead)
Tocopherols concentrate, mixed (description, heavy metals, lead)
DL-α-Tocopheryl acetate (lead, heavy metals)
d-α-Tocopheryl acetate (heavy metals, lead)
d-α-Tocopheryl acetate concentrate (description, heavy metals, lead)
d-α-Tocopheryl acid succinate (heavy metals, lead)
Tragacanth (heavy metals, lead)
L-Tryptophan (description, specific rotation)
L-Tyrosine (specific rotation)
L-Valine (specific rotation)
Vitamin B_{12} (identification, assay)
Vitamin D_2 (identification)
Vitamin D_3 (identification)
Xanthan gum (ash, heavy metals)
Xylitol (lead)
Yeast extract ([formerly Autolyzed yeast extract] description, requirements, assay, other tests)
Zinc gluconate (numerous changes)

Interested persons may, on or before April 17, 1995, submit to NAS (address above) written comments regarding the monographs listed in this notice. Those wishing to make comments are encouraged to submit supporting data and documentation with their comments. Two copies of any comments are to be submitted. Comments and supporting data or documentation are to be identified with the docket number found in brackets in the heading of this document and should include a statement that it is in response to this **Federal Register** notice. NAS will forward a copy of each comment to the Dockets Management Branch (address above). Received comments may be seen in the Dockets Management Branch between 9 a.m. and 4 p.m., Monday through Friday.

Dated: March 3, 1995.

L. Robert Lake,

Acting Director, Center for Food Safety and Applied Nutrition.

[FR Doc. 95–6529 Filed 3–15–95; 8:45 am]

BILLING CODE 4160–01–F

[Docket No. 95N–0063]

Dey Laboratories, et al.; Withdrawal of Approval of 14 Abbreviated New Drug Applications

AGENCY: Food and Drug Administration, HHS.

ACTION: Notice.

SUMMARY: The Food and Drug Administration (FDA) is withdrawing approval of 14 abbreviated new drug applications (ANDA's). The holders of the ANDA's notified the agency in writing that the drug products were no longer marketed and requested that the approval of the applications be withdrawn.

EFFECTIVE DATE: April 17, 1995.

FOR FURTHER INFORMATION CONTACT: Carolyn C. Harris, Center for Drug Evaluation and Research (HFD–360), Food and Drug Administration, 7500 Standish Pl., Rockville, MD 20855, 301–594–1038.

SUPPLEMENTARY INFORMATION: The holders of the ANDA's listed in the table in this document have informed FDA that these drug products are no longer marketed and have requested that FDA withdraw approval of the applications. The applicants have also, by their request, waived their opportunity for a hearing.

ANDA no.	Drug	Applicant
70–805	Metaproterenol Sulfate Inhalation Solution, U.S.P., 5%	Dey Laboratories, 2751 Napa Valley Corporate Dr., Napa, CA 94558.
80–086	Sulfadiazine Tablets, 167 milligrams (mg) Sulfamerazine Tablets, 167 mg Sulfamethazine Tablets, 167 mg.	Purepac Pharmaceutical, Co., 200 Elmora Ave., Elizabeth, NJ 07207.
80–120	Isoniazid Tablets, 100 mg	Towne, Paulsen & Co., Inc., 14527 South San Pedro St., Gardena, CA 90248.
80–132	Isoniazid Tablets, U.S.P.	Purepac Pharmaceutical, Co.
80–276	Testosterone Propionate Injection	Elkins-Sinn, Inc., 2 Esterbrook Lane, Cherry Hill, NJ 08003–4099.
80–308	Methyltestosterone Buccal Tablets, 10 mg	Purepac Pharmaceutical, Co.
80–309	Methyltestosterone Tablets, 10 mg	Do.
80–310	Methyltestosterone Tablets, 25 mg	Do.
80–459	Hyrocortisone Emulsion Cream, 1%	Elder Pharmaceuticals, Inc., ICN Plaza, 3300 Highland Ave., Costa Mesa, CA 92626.
80–475	Methyltestosterone Tablets	Purepac Pharmaceuticals, Inc.
80–489	Hydrocortisone Ointment, 0.5%	Altana Inc., 60 Baylis Rd., Melville, NY 11747.
80–581	Pyridoxine Hydrochloride Injection U.S.P., 100 mg/milliliter (mL)	Elkins-Sinn, Inc.
80–797	Chlorpheniramine Maleate Injection, 10 mg/mL and 100 mg/mL	Do.
80–928	Propantheline Bromide Tablets, 15 mg	Geneva Pharmaceuticals, Inc., 2555 West Midway Blvd., Broomfield, CO 80038–0446.

Therefore, under section 505(e) of the Federal Food, Drug, and Cosmetic Act (21 U.S.C. 355(e)) and under authority delegated to the Director, Center for Drug Evaluation and Research (21 CFR 5.82), approval of the ANDA's listed above, and all amendments and supplements thereto, is hereby withdrawn, effective April 17, 1995.

Dated: March 2, 1995.

Murray M. Lumpkin,

Deputy Director, Center for Drug Evaluation and Research.

[FR Doc. 95–6426 Filed 3-15–95; 8:45 am]

BILLING CODE 4160–01–F

Advisory Committee; Notice of Meeting

AGENCY: Food and Drug Administration, HHS.

ACTION: Notice.

SUMMARY: This notice announces a forthcoming meeting of a public advisory committee of the Food and Drug Administration (FDA). This notice also summarizes the procedures for the meeting and methods by which

interested persons may participate in open public hearings before FDA's advisory committees.

FDA has established an Advisory Committee Information Hotline (the hotline) using a voice-mail telephone system. The hotline provides the public with access to the most current information on FDA advisory committee meetings. The advisory committee hotline, which will disseminate current information and information updates, can be accessed by dialing 1–800–741–8138 or 301–443–0572. Each advisory committee is assigned a 5-digit number. This 5-digit number will appear in each individual notice of meeting. The hotline will enable the public to obtain information about a particular advisory committee by using the committee's 5-digit number. Information in the hotline is preliminary and may change before a meeting is actually held. The hotline will be updated when such changes are made.

MEETING: The following advisory committee meeting is announced:

Antiviral Drugs Advisory Committee

Date, time, and place. April 3 and 4, 1995, 8 a.m., Parklawn Bldg., conference rooms D and E, 5600 Fishers Lane, Rockville, MD.

Type of meeting and contact person. Open committee discussion, April 3, 1995, 8 a.m. to 11:30 a.m.; open public hearing, 11:30 a.m. to 12:30 p.m., unless public participation does not last that long; closed committee deliberations, 12:30 p.m. to 2:30 p.m.; open committee discussion, 2:30 p.m. to 5:30 p.m.; closed committee deliberations, April 4, 1995, 8 a.m. to 4 p.m.; Lee L. Zwanziger or Liz Ortuzar, Center for Drug Evaluation and Research (HFD–9), Food and Drug Administration, 5600 Fishers Lane, Rockville, MD 20857, 301–443–5455, or FDA Advisory Committee Information Hotline, 1–800–741–8138 (301–443–0572 in the Washington, DC area), Antiviral Drugs Advisory Committee, code 12531.

General function of the committee. The committee reviews and evaluates available data concerning the safety and effectiveness of marketed and investigational human drug products for use in the treatment of acquired immune deficiency syndrome (AIDS), AIDS-related complex (ARC), and other viral, fungal, and mycobacterial infections.

Agenda—Open public hearing. Interested persons may present data, information, or views, orally or in writing, on issues pending before the committee. Those desiring to make formal presentations should notify a contact person before March 24, 1995, and submit a brief statement of the general nature of the evidence or arguments they wish to present, the names and addresses of proposed participants, and an indication of the approximate time required to make their comments.

Open committee discussion. The committee will hear presentations and discuss scientific issues relevant to liposomal antifungal agents.

Closed committee deliberations. On April 3 and 4, 1995, the committee will discuss trade secret and/or confidential commercial information relevant to pending new drug applications. This portion of the meeting will be closed to permit discussion of this information (5 U.S.C. 552b(c)(4)).

Each public advisory committee meeting listed above may have as many as four separable portions: (1) An open public hearing, (2) an open committee discussion, (3) a closed presentation of data, and (4) a closed committee deliberation. Every advisory committee meeting shall have an open public hearing portion. Whether or not it also includes any of the other three portions will depend upon the specific meeting involved. The dates and times reserved for the separate portions of each committee meeting are listed above.

The open public hearing portion of each meeting shall be at least 1 hour long unless public participation does not last that long. It is emphasized, however, that the 1 hour time limit for an open public hearing represents a minimum rather than a maximum time for public participation, and an open public hearing may last for whatever longer period the committee chairperson determines will facilitate the committee's work.

Public hearings are subject to FDA's guideline (subpart C of 21 CFR part 10) concerning the policy and procedures for electronic media coverage of FDA's public administrative proceedings, including hearings before public advisory committees under 21 CFR part 14. Under 21 CFR 10.205, representatives of the electronic media may be permitted, subject to certain limitations, to videotape, film, or otherwise record FDA's public administrative proceedings, including presentations by participants.

Meetings of advisory committees shall be conducted, insofar as is practical, in accordance with the agenda published in this **Federal Register** notice. Changes in the agenda will be announced at the beginning of the open portion of a meeting.

Any interested person who wishes to be assured of the right to make an oral presentation at the open public hearing portion of a meeting shall inform the contact person listed above, either orally or in writing, prior to the meeting. Any person attending the hearing who does not in advance of the meeting request an opportunity to speak will be allowed to make an oral presentation at the hearing's conclusion, if time permits, at the chairperson's discretion.

The agenda, the questions to be addressed by the committee, and a current list of committee members will be available at the meeting location on the day of the meeting.

Transcripts of the open portion of the meeting may be requested in writing from the Freedom of Information Office (HFI–35), Food and Drug Administration, rm. 12A–16, 5600 Fishers Lane, Rockville, MD 20857, approximately 15 working days after the meeting, at a cost of 10 cents per page. The transcript may be viewed at the Dockets Management Branch (HFA–305), Food and Drug Administration, rm. 1–23, 12420 Parklawn Dr., Rockville, MD 20857, approximately 15 working days after the meeting, between the hours of 9 a.m. and 4 p.m., Monday through Friday. Summary minutes of the open portion of the meeting may be requested in writing from the Freedom of Information Office (address above) beginning approximately 90 days after the meeting.

The Commissioner has determined for the reasons stated that those portions of the advisory committee meetings so designated in this notice shall be closed. The Federal Advisory Committee Act (FACA) (5 U.S.C. app. 2, 10(d)), permits such closed advisory committee meetings in certain circumstances. Those portions of a meeting designated as closed, however, shall be closed for the shortest possible time, consistent with the intent of the cited statutes.

The FACA, as amended, provides that a portion of a meeting may be closed where the matter for discussion involves a trade secret; commercial or financial information that is privileged or confidential; information of a personal nature, disclosure of which would be a clearly unwarranted invasion of personal privacy; investigatory files compiled for law enforcement purposes; information the premature disclosure of which would be likely to significantly frustrate implementation of a proposed agency action; and information in certain other instances not generally relevant to FDA matters.

Examples of portions of FDA advisory committee meetings that ordinarily may be closed, where necessary and in accordance with FACA criteria, include the review, discussion, and evaluation

of drafts of regulations or guidelines or similar preexisting internal agency documents, but only if their premature disclosure is likely to significantly frustrate implementation of proposed agency action; review of trade secrets and confidential commercial or financial information submitted to the agency; consideration of matters involving investigatory files compiled for law enforcement purposes; and review of matters, such as personnel records or individual patient records, where disclosure would constitute a clearly unwarranted invasion of personal privacy.

Examples of portions of FDA advisory committee meetings that ordinarily shall not be closed include the review, discussion, and evaluation of general preclinical and clinical test protocols and procedures for a class of drugs or devices; consideration of labeling requirements for a class of marketed drugs or devices; review of data and information on specific investigational or marketed drugs and devices that have previously been made public; presentation of any other data or information that is not exempt from public disclosure pursuant to the FACA, as amended; and, deliberation to formulate advice and recommendations to the agency on matters that do not independently justify closing.

This notice is issued under section 10(a)(1) and (2) of the Federal Advisory Committee Act (5 U.S.C. app. 2), and FDA's regulations (21 CFR part 14) on advisory committees.

Dated: March 9, 1995.

Linda A. Suydam,

Interim Deputy Commissioner for Operations.

[FR Doc. 95–6427 Filed 3-15–95; 8:45 am]

BILLING CODE 4160–01–F

Office of the Secretary

Correction of Notice of Findings of Scientific Misconduct

AGENCY: Office of the Secretary, HHS.

ACTION: Correction.

SUMMARY: A Notice beginning on page 10588 in the issue of February 27, 1995, entitled ''Findings of Scientific Misconduct'' is hereby reprinted in its entirety because of an omission in the original printing:

Vivian N. Tanner, Cleveland Clinic Foundation: The Division of Research Investigations of the Office of Research Integrity (ORI) conducted an investigation into possible scientific misconduct on the part of Vivian N. Tanner while she was a clinic coordinator for the Collaborative Ocular Melanoma Study (COMS) at the Cleveland Clinic Foundation (CCF). ORI concluded that Ms. Tanner committed scientific misconduct by falsifying and fabricating clinical trial data on research data forms related to a multicenter study on the treatment of choroidal melanoma, a rare form of eye cancer. Due to these falsifications and fabrications, inaccurate clinical data were entered into the clinical trial database. These acts were committed over a period of several years, were material, and, therefore, were potentially detrimental to the study. The CCF COMS project has received U.S. Public Health Service support from 1985 to the present through subcontract funds from a National Eye Institute cooperative agreement award to the COMS Coordinating Center, The Wilmer Ophthalmological Institute, The Johns Hopkins Medical Institutions, Baltimore, Maryland. Ms. Tanner has been debarred from eligibility for and involvement in grants as well as other assistance awards and contracts from the Federal Government for a period of three years. Because the COMS is an ongoing study, no publications were affected by the falsified or fabricated data, and no clinical treatment has been based on the results of the study.

FOR FURTHER INFORMATION, CONTACT: Director, Division of Research Investigations, Office of Research Integrity, 301–443–5330.

Lyle W. Bivens, Ph.D.,

Director, Office of Research Integrity.

[FR Doc. 95–6446 Filed 3–15–95; 8:45 am]

BILLING CODE 4160–17–P

National Institutes of Health

Division of Research Grants; Notice of Closed Meetings

Pursuant to Section 10(d) of the Federal Advisory Committee Act, as amended (5 U.S.C. Appendix 2), notice is hereby given of the following Division of Research Grants Special Emphasis Panel (SEP) meetings:

Purpose/Agenda: To review individual grant applications.

Name of SEP: Chemistry and Related Sciences.
Date: March 27, 1995.
Time: 2:00 p.m.
Place: NIH, Westwood Building, Room 320, Telephone Conference.
Contact Person: Dr. Zakir Bengali, Scientific Review Administrator, 5333 Westbard Ave., Room 320, Bethesda, MD 20892, (301) 594–7317.

Name of SEP: Microbiological and Immunological Sciences.
Date: April 3, 1995.
Time: 10:00 a.m.
Place: NIH, Westwood Building, Room 407B, Telephone Conference.
Contact Person: Dr. Betty Hayden, Scientific Review Administrator, 5333 Westbard Ave., Room 407B, Bethesda, MD 20892, (301) 594–7310.

Name of SEP: Microbiological and Immunological Sciences.
Date: April 3, 1995.
Time: 3:00 p.m.
Place: NIH, Westwood Building, Room 407B, Telephone Conference.
Contact Person: Dr. Betty Hayden, Scientific Review Administrator, 5333 Westbard Ave., Room 407B, Bethesda, MD 20892, (301) 594–7310.

Name of SEP: Behavioral and Neurosciences.
Date: April 3, 1995.
Time: 8:30 a.m.
Place: Holiday Inn, Chevy Chase, MD.
Contact Person: Dr. Teresa Levitin, Scientific Review Admin., 5333 Westbard Ave., Room 303, Bethesda, MD 20894, (301) 594–7141.

Name of SEP: Chemistry and Related Sciences.
Date: April 4, 1995.
Time: 1:00 p.m.
Place: NIH, Westwood Building, Room 435, Telephone Conference.
Contact Person: Dr. Marcelina Powers, Scientific Review Administrator, 5333 Westbard Ave., Room 435, Bethesda, MD 20892, (301) 594–7120.

Name of SEP: Microbiological and Immunological Sciences.
Date: April 4, 1995.
Time: 3:00 p.m.
Place: NIH, Westwood Building, Room 407B, Telephone Conference.
Contact Person: Dr. Betty Hayden, Scientific Review Administrator, 5333 Westbard Ave., Room 407B, Bethesda, MD 20892, (301) 594–7310.

Name of SEP: Chemistry and Related Sciences.
Date: April 6, 1995.
Time: 1:30 p.m.
Place: NIH, Westwood Building, Room 339B, Telephone Conference.
Contact Person: Dr. Jerry Critz, Scientific Review Administrator, 5333 Westbard Ave., Room 339B, Bethesda, MD 20892, (301) 594–7322.

Name of SEP: Microbiological and Immunological Sciences.
Date: April 7, 1995.
Time: 1:00 p.m.
Place: NIH, Westwood Building, Room 403C, Telephone Conference.
Contact Person: Dr. Anita Weinblatt, Scientific Review Admin., 5333 Westbard Ave., Room 403C, Bethesda, MD 20892, (301) 594–7175.

Name of SEP: Chemistry and Related Sciences.
Date: April 12, 1995.
Time: 1:00 p.m.
Place: NIH, Westwood Building, Room 435, Telephone Conference.
Contact Person: Dr. Marcelina Powers, Scientific Review Administrator, 5333 Westbard Ave., Room 435, Bethesda, MD 20892, (301) 594–7120.

Name of SEP: Clinical Sciences.
Date: May 2, 1995.
Time: 2:30 p.m.
Place: NIH, Westwood Building, Room 439, Telephone Conference.
Contact Person: Dr. Gordon Johnson, Scientific Review Admin., 5333 Westbard Ave., Room 439, Bethesda, MD 20892, (301) 594–7216.

The meetings will be closed in accordance with the provisions set forth in secs. 552(c)(4) and 552b(c)(6), Title 5, U.S.C. Applications and/or proposals and the discussions could reveal confidential trade secrets or commercial property such as patentable material and personal information concerning individuals associated with the applications and/or proposals, the disclosure of which would constitute a clearly unwarranted invasion of personal privacy.

This notice is being published less than 15 days prior to the meeting due to the urgent need to meet timing limitations imposed by the grant review cycle.

(Catalog of Federal Domestic Assistance Program Nos. 93.306, 93.333, 93.337, 93.939–93.396, 93.837–93.844, 93.846–93.878, 93.892, 93.893, National Institutes of Health, HHS)

Dated: March 9, 1995.

Margery G. Grubb,

Senior Committee Management Specialist, NIH.

[FR Doc. 95–6399 Filed 3–15–95; 8:45 am]

BILLING CODE 4140–01–M

Division of Research Grants; Notice of Closed Meetings

Pursuant to Section 10(d) of the Federal Advisory Committee Act, as amended (5 U.S.C. Appendix 2), notice is hereby given of the following Division of Research Grants Special Emphasis Panel (SEP) meetings:

Purpose/Agenda: To review individual grant applications.
Name of SEP: Behavioral and Neurosciences.
Date: March 21, 1995.
Time: 2:00 p.m.
Place: NIH, Westwood Building, Room 319C, Telephone Conference.
Contact Person: Dr. Carl Banner, Scientific Review Administrator, 5333 Westbard Ave., Room 319A, Bethesda, MD 20892, (301) 594–7206.

Name of SEP: Behavioral and Neurosciences.
Date: April 3, 1995.
Time: 2:00 p.m.
Place: NIH, Westwood Building, Room 319C, Telephone Conference.
Contact Person: Dr. Anita Sostek, Scientific Review Administrator, 5333 Westbard Ave., Room 319C, Bethesda, MD 20892, (301) 594–7358.

Name of SEP: Behavioral and Neurosciences.
Date: April 20, 1995.
Time: 8:00 a.m.
Place: Bethesda Marriott, Bethesda, MD.
Contact Person: Dr. Leonard Jakubczak, Scientific Review Admin., 5333 Westbard Ave., Room 325C, Bethesda, MD 20892, (301) 594–7198.

Name of SEP: Clinical Sciences.
Date: April 6, 1995.
Time: 11:00 a.m.
Place: NIH, Westwood Building, Room 220, Telephone Conference.
Contact Person: Dr. Daniel McDonald, Scientific Review Administrator, 5333 Westbard Ave., Room 220, Bethesda, MD 20892, (301) 594–7301.

Name of SEP: Clinical Sciences.
Date: April 6, 1995.
Time: 12:00 noon.
Place: NIH, Westwood Building, Room 220, Telephone Conference.
Contact Person: Dr. Daniel McDonald, Scientific Review Administrator, 5333 Westbard Ave., Room 220, Bethesda, MD 20892, (301) 594–7301.

Name of SEP: Clinical Sciences.
Date: April 6, 1995.
Time: 1:00 p.m.
Place: NIH, Westwood Building, Room 220, Telephone Conference.
Contact Person: Dr. Daniel McDonald, Scientific Review Administrator, 5333 Westbard Ave., Room 220, Bethesda, MD 20892, (301) 594–7301.

The meetings will be closed in accordance with the provisions set forth in secs. 552b(c)(4) and 552b(c)(6), Title 5, U.S.C. Applications and/or proposals and the discussions could reveal confidential trade secrets or commercial property such as patentable material and personal information concerning individuals associated with the applications and/or proposals, the disclosure of which would constitute a clearly unwarranted invasion of personal privacy.

This notice is being published less than 15 days prior to the meeting due to the urgent need to meet timing limitations imposed by the grant review cycle.

(Catalog of Federal Domestic Assistance Program Nos. 93.306, 93.333, 93.337, 93.393–93.396, 93.837–93.844, 93.846–93.878, 93.892, 93.893, National Institutes of Health, HHS)

Dated: March 13, 1995.

Margery G. Grubb,

Senior Committee Management Specialist, NIH.

[FR Doc. 95–6564 Filed 3–15–95; 8:45 am]

BILLING CODE 4140–01–M

Notice of Meeting of the Alternative Medicine Program Advisory Council and its Subcommittees

Pursuant to Section 10(d) of the Federal Advisory Committee Act, as amended (5 U.S.C. Appendix 2), notice is hereby given of the meetings of the Alternative Medicine Program Advisory Council (AMPAC) and its Subcommittees on March 20, 21 and 22, 1995 at the National Institutes of Health, Building 31, 9000 Rockville Pike, Bethesda, Maryland.

In accordance with the provisions set forth in sec. 552b(c)(6), Title 5, U.S.C., the full Council will meet on March 20 in closed session in Conference Room 7, from 8:30 am to 9:30 am to discuss conflict of interest procedures, issues, and questions relating to the operation of the AMPAC and its Subcommittees. These discussions could disclose information of a personal nature where disclosure would constitute a clearly unwarranted invasion of personal privacy.

Meeting of the Subcommittees will be open to the public on March 20 at the times and locations listed below for the discussion of planning and priority of activities. Attendance by the public will be limited to space available.

Subcommittee Name: Research Subcommittee.
Place: Conference Room 6.
Time: 9:30 a.m. to 12:45 p.m.

Subcommittee Name: Information Services Subcommittee.
Place: Conference Room 6.
Time: 1:45 p.m. to 5 p.m.

Subcommittee Name: Professional Liaison Subcommittee.
Place: Conference Room 7.
Time: 1:45 p.m. to 5 p.m.

The full Council will meet in open session on March 21 from 8:30 am to 5:15 pm and on March 22 from 8:30 am to 12:30 pm in Conference Room 10. There will be a report from the Acting Director, Office of Alternative Medicine, from the chairs of the Research and Information Services Subcommittees, and the Longrange Planning Workgroup of the Strategic Planning Subcommittee, and from representatives of the two funded Centers for Alternative Medicine Research. Comments may be made by the public from 3:15 pm to 4:30 pm on March 21 and from 10:45 am to 11:15 am on March 22. Attendance by the public will be limited to space available.

Ms. Beth Clay, Committee Management Officer, Office of Alternative Medicine, NIH, 6120 Executive Boulevard, Suite 450, Rockville, MD 20892–9904, phone (301) 402–2467, fax (301) 402–4741, will furnish the meeting agenda, roster of Council members, and substantive program information upon request. Any individual who requires special assistance, such as sign language interpretation or other reasonable accommodations, should contact Ms. Clay at the above location no later than March 16, 1995.

This notice is being published less than fifteen days prior to the meeting due to difficulties encountered in finalized the agenda and the need to proceed with the meeting as scheduled to address important issues in a timely manner.

Dated: March 13, 1995.

Margery G. Grubb,

Senior Committee Management Specialist, NIH.

[FR Doc. 95–6563 Filed 3–15–95; 8:45 am]

BILLING CODE 4140–01–M

DEPARTMENT OF HOUSING AND URBAN DEVELOPMENT

Office of the Assistant Secretary for Public and Indian Housing

[Docket No. N–95–3740; FR–3644–N–02]

Announcement of Funding Awards, Community Development Block Grant (CDBG) Program for Indian Tribes and Alaskan Native Villages; Fiscal Year 1994

AGENCY: Office of the Assistant Secretary for Public and Indian Housing, HUD.

ACTION: Announcement of funding awards.

SUMMARY: In accordance with section 102(a)(4)(C) of the Department of Housing and Urban Development Reform Act of 1989, this document notifies the public of funding awards for Fiscal Year 1994 Indian tribes and Alaskan native villages applicants under the CDBG Program for Indian Tribes and Alaskan Native Villages. The purpose of this document is to announce the names and addresses of the award winners and the amount of the awards.

FOR FURTHER INFORMATION CONTACT: Dom Nessi, Office of Native Programs, Office of Public and Indian Housing, Department of Housing and Urban Development, Room 8204 (L'Enfant Plaza), 451 Seventh Street, SW, Washington, DC 20410; telephone (202) 755–0032. The TDD number for hearing impaired is (202) 708–2565. (These are not toll-free numbers).

SUPPLEMENTARY INFORMATION:

The CDBG Program for Indian Tribes and Alaskan Native Villages is authorized by Title I, Housing and Community Development Act of 1974, as amended (42 U.S.C. 5301 *et seq.*); sec. 7(d) of the Department of Housing and Urban Development Act (42 U.S. C. 3535(d)); 24 CFR part 953. The purpose of the competition was to assist in the development of viable Indian and Alaskan native communities, including decent housing, a suitable living environment, and economic opportunities. The awards announced in this Notice were selected for funding in a competition announced in the **Federal Register** on April 21, 1994 (59 FR 19056). Recipients were chosen in a competition under selection criteria contained in that Notice.

In accordance with section 102(a)(4)(C) of the Department of Housing and Urban Development Reform Act of 1989 (Pub. L. 101–235, approved December 15, 1989), the Department is publishing the names and addresses of the tribes which received funding, and the amount of funds awarded to each. This information is provided in Appendix A to this document.

Dated: March 9, 1995.

Joseph Shuldiner,

Assistant Secretary for Public and Indian Housing.

Appendix A

FY 1994 Indian Funding Results by Native American Programs Office

Program Name: Community Development Block Grant Program (CDBG).

Statute: Housing Community Act of 1974 as amended.

Tribe (name and address)	Amount approved
Eastern/Wooodlands Office	
Sokoagon Chippewa, Route 1 Box 625, Crandon, WI 54520	$300,000
Sault Ste. Marie, 206 Grenough St., Sault Ste. Marie, MI 49783	300,000
Red Lake, POB 550, Red Lake, MN 56671	160,000
Poarch Creek, HC 69 Box 85B, Atmore, AL 36502	298,821
Lac Courte Oreilles, Route 2 Box 2700, Hayward, WI 54843	203,700
Forest County, POB 340, Crandon WI 54520	300,000
Pleasant Point, POB 343, Perry, ME 04667	300,000
Seneca Nation, POB 1490, Irving, NY 14081	295,550
Indian Township, POB 301, Princeton, ME 004668	196,465
Choctaw, POB 6010 Choctaw Branch, Philadelpha, MS 39350	300,000
Eastern Cherokee, POB 455, Cherokee, NC 287190	300,000
Total	2,954,536
Southern Plains Office	
Iowa Tribe KS&NE, Route 1, Box 58–A, White Cloud, KS 66094	300,000
Creek Nation, Route 1, Box 58–A, Okmulgee, OK 74447	500,000
Citizen Band Potawatomi, 1901 S. Gordon Cooper Drive, Shawnee, OK 74801	400,000
Chitimacha Tribe, P.O. Box 331, Charenton, LA 70523	300,000
Wyandotte Tribe, P.O. Box 250, Wyandotte, OK 74370	274,954
Comanche Tribe, P.O. Box 908, Lawton, OK 73502	400,000
Choctaw Nation, P.O. Drawer 1210, Durant, OK 74702	500,000
Osage Nation, 627 Grandview, Pawhuska, OK 74056	500,000
Kaw Tribe, P.O. Box 50, Kaw City, OK 74641	300,000
Cherokee Nation, P.O. Box 948, Tahlequah, OK 74465	500,000
Seneca Cayuga Tribe, P.O. Box 1283, Miami, OK 74355	300,000
Sac & Fox OK, Route 2, Box 246, Stroud, OK 74079	400,000
Chickasaw Nation, P.O. Box 1548, Ada, OK 74820	500,000
Ponca Tribe, Box 2, White Eagle Ponca City, OK 74601	300,000
Coushatta Tribe LA, P.O. Box 818, Elton, LA 70532	300,000
Cheyenne-Arapaho Tribe, P.O. Box 38, Concho, OK 73022	266,560
Seminole Nation, P.O. Box 1498, Wewoka, OK 74884	300,000
Pawnee Tribe, P.O. Box 470, Pawnee, OK 74058	300,000
Absentee-Shawnee Tribe, 2025 Gordon Cooper Dr., Shawnee, OK 74801	300,000
Total	6,941,514
Northern Plains Office	
Assiniboine & Sioux, P.O. Box 1027, Poplar, MT 59255	223,090
Fort Belknap Indian Comm, HC 3 Box 2, New Town, ND 58763	800,000
Northern Arapahoe Tribe, P.O. Box 396, Fort Washakie, WY 82514	547,600
Rosebud Sioux Tribe, P.O. Box 430, Rosebud, SD 57057	341,250
Salish & Kootenia Tribe, P.O. Box 278, Pablo, MT 59855	800,000
Shoshone Tribe, P.O. Box 538, Fort Washakie, WY 82514	800,000
Sisseton-Wapeton Sioux, P.O. Box 509, Agency Village, SD 57262	500,000
Southern Ute Tribe, P.O. Box 737, Ignacio, CO 81137	800,000
Standing Rock Sioux, P.O. Box D, Fort Yates, ND 58538	760,002
Turtle Mountain Band, P.O. Box 900, Belcourt, ND 58316	680,000
Total	6,251,942
Southwest Office	
Howonquet Indian Council of the Smith River Rancheria, P.O. Box 239, Smith River, CA 95567	450,000
Trinidad Rancheria, P.O. Box 630, Trinidad, CA 95570–0630	449,712
Shingle Springs Rancheria, P.O. Box 1340, Shingle Springs, CA 95682	449,110
Pit River Indian Tribe, P.O. Drawer 1570, Burney, CA 96013	450,000
Pinoleville Rancheria, 367 N. State Street #204, Ukiah, CA 95482	333,796
Picayune Rancheria, P.O. Box 269, Coarsegold, CA 93614	440,000

Tribe (name and address)	Amount approved
Hoopa Valley Indian Reservation, P.O. Box 1348, Hoopa, CA 95546	518,086
Guidiville Rancheria, P.O. Box 339, Talmage, CA 95481	450,000
Greenville Rancheria, 634 Saint Marks, Suite C, Redding, CA 96003–1815	450,000
Colusa Rancheria, P.O. Box 8, Colusa, CA 95932	379,000
Zuni Pueblo Indian Reservation, P.O. Box 339, Zuni, NM 87327	997,634
Big Pine Indian Reservation P.O. Box 700, Big Pine, CA 93513	450,000
Tonto Apache Tribe, Tonto Apache Reservation #30, Payson, AZ 85541	450,000
Tohono O'odham Indian Tribe, P.O. Box 837, Sells, AZ 85634	1,884,940
Taos Pueblo, P.O. Box 1846, Taos, NM 87571	714,477
Santa Ynez Indian Reservation, P.O. Box 517, Santa Ynez, CA 93460	12,900
Santa Ana Pueblo, 02 Dove Rd., Bernalillo, NM 87004	370,228
Kaibab-Paiute Tribe, H.C. 65, Box #2, Fredonia, AZ 86022	277,626
Hualapai Indian Tribe, P.O. Box 179, Peach Springs, AZ 86434	450,000
Havasupai Indian Tribe, P.O. Box 10, Supai, AZ 86435	810,000
Gila River Indian Community, P.O. Box 97, Sacaton, AZ 85247	86,250
Fort Mojave Indian Reservation, 500 Merriman Avenue, Needles, CA 92363	1,019,541
Cuyapaipe Band of Mission Indians, 2271 Alpine Blvd., Alpine, CA 91901	354,850
Cabazon Indian Reservation, 84–245 Indio Springs Drive, Indio, CA 92201	405,000
Maopa Band of Paiutes, P.O. Box 340, Moapa, NV 89025–0340	450,000
The Navajo Nation Council, P.O. Box 9000, Window Rock, AZ 86515	1,034,839
San Carlos Apache Tribe, P.O. Box "O", San Carlos, AZ 85550	743,695
Manzanita Band of Mission, P.O. Box 1302, Boulevard, CA 91905	416,335
Mescalero Indian Reservation, P.O. Box 176, Mescalero, NM 88340	546,617
White Mountain Apache Tribe, P.O. Box 700, Whiteriver, AZ 85941	1,096,527
Bishop Paiute Indian Reservation, P.O. Box 548 Bishop, CA 93515 93515	450,000
Total	17,761,391
Northwest Office	
Skokomish Tribe, Rt. 5, Box 432, Shelton, WA 98584	270,000
Nisqually Tribe, 4820 She-Nah-Num Dr. S.E., Olympia, WA 98503	270,000
Klamath Tribe, POB 436, Chiloquin, OR 97624	270,000
Burns Paiute Tribe, PO HC–71, Burns, OR 97720	267,721
Nooksack Tribe, POB 157, Deming, WA 98244	270,000
Shoalwater Tribe, POB 130, Tokeland, WA 98590	270,000
Sauk-Suiattle, 5318 Chief Brown Lane, Darrington, WA 98241	96,726
Shoshone Bannock, POB 306, Fort Hall, ID 83203	269,999
Total	1,984,446
Alaska Office	
Klawock Coop Association, P.O. Box 112, Klawock, AK 99925	486,472
Chalkyitsik Village, P.O. Box 56, Chalkyitsik, AK 99788	371,090
Savoonga Village, P.O. Box 129, Savoonga, AK 99769	500,000
Egegik Village Council, Box 29, Egegik, AK 99579	300,000
Seldovia Village, P.O. Drawer F, Seldovia, AK 99663	134,911
Tanana Chiefs Conf. Inc., 122 First Avenue, Suite 600, Fairbanks, AK 99701	500,000
Tuluksak Native Council, P.O. Box 156, Tuluksak, AK 99678	337,647
Tlingit Haida Tribe Rehabilitation, 320 W. Willoughby Ave., Suite 300, Juneau, AK 99801	500,000
Koyukuk Village, P.O. Box 109, Koyukuk, AK 99754	206,929
Chevak Village, P.O. Box 5514, Chevak, AK 99563	500,000
Total	3,837,049
Grand Total	39,730,878

[FR Doc. 95–6507 Filed 3–15–95; 8:45 am]

BILLING CODE 4210–33–P

Office of the Secretary

Office of the Assistant Secretary for Fair Housing and Equal Opportunity

[Docket No. D–95–1083; FR–3804–D–01]

Delegation and Redelegation of Authority

AGENCY: Office of the Secretary; Office of the Assistant Secretary for Fair Housing and Equal Opportunity (FHEO), HUD.

ACTION: Notice of delegation and redelegation of authority regarding the civil rights related program requirements (CRRPR's) of HUD programs.

SUMMARY: In the delegation portion of this notice, the Secretary of Housing and Urban Development is delegating to the Assistant Secretary for Fair Housing and Equal Opportunity the power and authority to make decisions regarding the civil rights related requirements of HUD programs. In the redelegation section of this notice, the Assistant Secretary for Fair Housing and Equal Opportunity redelegates this authority to the Director, Program Operations and Compliance Center, for each field office.

EFFECTIVE DATE: March 8, 1995.

FOR FURTHER INFORMATION CONTACT: Laurence D. Pearl, Director, Office of Program Standards and Evaluation, telephone (0) 708–088, Department of Housing and Urban Development, 451 7th Street, SW, Washington, DC 0410. [This is not a toll-free number.] A telecommunications device for hearing impaired persons (TDD) is available at 1–800–543–894.

SUPPLEMENTARY INFORMATION: Due to the importance the Department places upon civil rights enforcement, the Department is making structural changes to help ensure that recipients under HUD programs comply with all civil rights related program requirements (also referred to as "CRRPRs"). This restructuring fits in with the overall HUD field reorganization intended to improve HUD's performance and provide HUD's customers—members of the public and program beneficiaries—more efficient service and less bureaucracy. The changes which shall be implemented pertain to how the Department, and the Office of Fair Housing and Equal Opportunity (FHEO), ensure that each party receiving federal financial assistance or other benefit, as a result of participation in a HUD program, complies with all civil rights related program requirements (CRRPRs) of the particular program. In order to receive benefits, it is essential that participants in HUD programs comply with the relevant CRRPRs.

It is easy to identify the civil rights related program requirements for a particular program, but more difficult to provide a general definition to encompass all CRRPRs. Depending upon the particular program, there are different sources which identify the CRRPRs. For example, civil rights related program requirements may be written into the statute or regulations governing the specific program at issue.

CRRPRs may also be found within such sources as general civil rights statutes, HUD Notices of Funding Availability (NOFAs), and Mortgage Letters. The subjects covered under CRRPRs include but are not limited to such topics as affirmative fair housing marketing, site and neighborhood standards, assurances or certifications of compliance with civil rights statutes, and monitoring recipient performance for compliance with civil rights requirements.

In the past, the Office of Fair Housing and Equal Opportunity, including the FHEO field staff, played a largely advisory role in regard to the impact of CRRPRs. In reviewing a HUD program application, the FHEO field staff would simply advise the HUD program staff in the field whether an applicant was in compliance with the CRRPRs. In the event of disagreement between the FHEO staff and program staff regarding the applicant's compliance with CRRPRs, the Regional Administrator or Area Manager for the particular office would make the final decision to resolve the issue.

Because the field reorganization has eliminated the positions of Regional Administrator and Area Manager, there is no one in the field offices to resolve such disagreements. Consequently, there is concern that compliance with CRRPRs will not be adequately considered. However, the Secretary has concluded that it is most important that HUD program funds and other benefits are given to applicants who comply with civil rights related program requirements of HUD programs. This can be accomplished by giving additional specific authority to the Assistant Secretary for Fair Housing and Equal Opportunity, at Headquarters, and to each Director, Program Operations and Compliance Center, in the field, in determining the status of applicants for or recipients of federal financial assistance or other benefits with respect to civil rights related program requirements. Clearly, the function of the Office of FHEO is to ensure compliance with civil rights requirements. This responsibility is accomplished not only by having the Office of FHEO administer and enforce civil rights statutes such as the Fair Housing Act, but also by having the Office of FHEO participate in decision making regarding compliance with the civil rights component of each HUD program.

This change in no way relieves HUD program staff of their obligation to be attentive to civil rights concerns in the administration of HUD programs, as reflected in section D of this delegation. It is designed solely to assure that serious FHEO issues are thoroughly considered before programmatic decisions are made.

This change also does not affect the rating process for competitive grant applications. The rating process often includes items of FHEO concern, such as commitments under section 3 of the Housing and Urban Development Act of 1968, or past experience in administering housing with inclusive racial and ethnic patterns. FHEO staff usually rate those criteria and provide the ratings to field program staff. Nothing in this delegation would allow FHEO to challenge the award of competitive assistance based on the program office's assessment of non-FHEO factors.

Accordingly, the Secretary delegates, and the Assistant Secretary for FHEO redelegates, authority as follows:

Section A. Authority Delegated

The Secretary of Housing and Urban Development delegates to the Assistant Secretary for Fair Housing and Equal Opportunity, the power and authority to determine whether an applicant for, or participant in, a HUD program is complying with the civil rights related program requirements (CRRPRs). CRRPRs are requirements of HUD programs relating to civil rights contained in laws and regulations pertaining to the particular program, general civil rights statutes, Notices of Funding Availability (NOFA's), Mortgagee Letters or by other agreement between the Assistant Secretary for Fair Housing and Equal Opportunity and the Assistant Secretary who has been delegated authority over the particular program.

Section B. Authority Redelegated

The Assistant Secretary for Fair Housing and Equal Opportunity retains the authority delegated from the Secretary of Housing and Urban Development, pursuant to Section A., above, and redelegates it to each Director, Program Operations and Compliance Center, for the field office over which he or she has responsibility.

Section C. No Authority To Redelegate

The authority granted pursuant to Section B., above, may not be further redelegated pursuant to this delegation and redelegation.

Section D. Authority Excepted From Redelegation

In the event that the Director, Program Operations and Compliance Center, and the Field office program official who has been redelegated authority to make funding decisions are not able to agree on the status of an applicant or participant with respect to a CRRPR, the matter shall be forwarded to Headquarters and the decision shall be made jointly by the Assistant Secretary for Fair Housing and Equal Opportunity and the Assistant Secretary who has been delegated authority over the particular program. In the event the two Assistant Secretaries are unable to agree, the matter shall be resolved by the Secretary.

Authority: Sec. 7(d), Department of Housing and Urban Development Act [42 U.S.C. 3535(d)].

Dated: March 8, 1995.

Roberta Achtenberg,

Assistant Secretary for Fair Housing and Equal Opportunity.

Henry G. Cisneros,

Secretary of Housing and Urban Development.

[FR Doc. 95–6464 Filed 3–15–95; 8:45 am]

BILLING CODE 4210–28–M

Office of the Assistant Secretary for Community Planning and Development

[Docket No. D–95–1084; FR–3900–D–01]

Supersedure and Redelegation of Authority To Execute Legal Instruments Pertaining to Section 312 Rehabilitation Loans

AGENCY: Office of the Assistant Secretary for Community Planning and Development, HUD.

ACTION: Notice of supersedure and redelegation of authority.

SUMMARY: In this notice, the assistant Secretary for Community Planning and Development (CPD) supersedes prior redelegations of authority pertaining to the Section 312 Loan Program, including the most recent redelegation at 52 FR 10952, dated April 6, 1987. In this new redelegation of authority under the Section 312 Loan Program, the Assistant Secretary for CPD provides an additional official with signature authority, lists officials under new titles to reflect a recent Departmental reorganization, and clarifies which documents are covered by the redelegation.

EFFECTIVE DATE: March 10, 1995.

FOR FURTHER INFORMATION CONTACT: William D. Hanson, Office of Affordable Housing Program, Room 7168, Department of Housing and Urban Development, 451 Seventh Street SW., Washington, DC 20410, (202) 401–3271. [This is not a toll-free number.].

SUPPLEMENTARY INFORMATION: The Secretary of Housing and Urban

Development has delegated most functions regarding the Section 312 Rehabilitation Loan Program under Section 312 of the Housing Act of 1964 (42 USC 1452(b)) to the Assistant Secretary for CPD. The Assistant Secretary for CPD has previously issued notices redelegating functions under the Section 312 Loan Program, and is by this notice issuing a new updated redelegation.

The Secretary of HUD has also delegated certain functions pertaining to property management and disposition under the Section 312 Rehabilitation Loan Program to the Assistant Secretary for Housing — Federal Housing Commissioner. the most recent delegation to the Assistant Secretary for Housing — Federal Housing Commissioner was published in the **Federal Register** on January 16, 1992, at 49 CFR 1942. That delegation remains in effect today, and is not affected by this present redelegation from the Assistant Secretary for CPD.

Although the section 312 Rehabilitation Loan Program was terminated by Section 289 of the Cranston-Gonzalez Affordable housing Act of 1989 (42 USC 12839), the Section 312 loan collection functions continue under 12 USC 1701(g)-5c (authorizing Section 312 collections to be deposited into the Department's revolving fund for liquidating programs). In order to expedite property foreclosures and judgments against the Section 312 borrowers in default and to take other actions associated with the servicing of Section 312 loans, the Assistant Secretary for CPD has determined that it is necessary to issue an updated redelegation pertaining to Section 312 loans. In this new redelegation, the Assistant Secretary for CPD redelegates authority to additional individuals and provides clarification as to the legal instruments covered by the redelegation. In addition, in this document, the Assistant Secretary for CPD supersedes the prior redelegations pertaining to the Section 312 Loan Program at 52 FR 10952 (dated April 6, 1987), 51 FR 5412 (dated February 13, 1986), 50 FR 13667 (dated April 5, 1985) and 47 FR 33, 324 (dated August 2, 1982).

Accordingly, the Assistant Secretary for CPD redelegates authority as follows:

A. Authority Redelegated

The Deputy Assistant Secretary for Grant Programs, Office of Community Planning and Development; the Director, Office of Affordable Housing Programs; the Deputy Director, Office of Affordable Housing Programs; and the Affordable Housing Loan Specialist appointed as Government Technical Representative to the Section 312 Loan Servicing Contract, Office of Affordable Housing Programs, are hereby individually redelegated the authority to execute in the name of the Secretary written instruments relating to Section 312 Rehabilitation Loans, including but not limited to: Deeds of release, quit claim deeds and deeds of reconveyance; substitutions of trustees; compromises; write-offs; close outs; releases related to insurance policies; assignments or satisfactions of notes, mortgages, deeds of trust and other security instruments; and any other legal instrument or document related to certain Section 312 loan-related property management and disposition functions that have not been delegated to the Assistant Secretary for Housing.

B. Authority Superseded

This redelegation supersedes previous redelegations of authority from the Assistant Secretary for CPD to execute legal instruments under the section 312 program, published at 47 FR 33324, August 2, 1982, 50 FR 13667, April 5, 1985; 51 FR 5412, February 13, 1986; and 52 FR 10952, April 6, 1987.

Authority: Sec. 312 of the Housing Act of 1964, 42 U.S.C. 1452b; 12 U.S.C. 1701g-5c; and section C, Delegation of Authority, 48 FR 49384, October 25, 1983; Section 7(d), Department of Housing and Urban Development Act, 42 U.S.C. Section 3535(d).

Dated: March 10, 1995

Andrew Cuomo,

Assistant Secretary for Community Planning and Development.

[FR Doc. 95–6462 Filed 3–15–95; 8:45 am]

BILLING CODE 4210–29–M

DEPARTMENT OF THE INTERIOR

Bureau of Land Management

[NV–930–1430–01; N–57973]

Notice of Realty Action; Nevada

AGENCY: Bureau of Land Management.

ACTION: Notice.

SUMMARY: The following land in Elko County, Nevada has been examined and identified as suitable for disposal by direct sale, under Section 203 and Section 209 of the Federal Land Policy and Management Act (FLPMA) of October 21, 1976 (43 U.S.C. 1713 and 1719) at no less than fair market value as determined by an appraisal:

Mount Diablo Meridian, Nevada

T. 35 N., R. 56 E.,
Sec. 30, lots 5, 13.

Comprising 17.34 acres, more or less.

The above described land is being offered as a direct sale to Walter W. Bear and Allie T. Bear. The land will not be offered for sale until at least 60 days after the date of publication of this notice in the **Federal Register**.

FOR FURTHER INFORMATION CONTACT: Detailed information concerning this action is available for review at the Bureau of Land Management, Elko Resource Area, 3900 E. Idaho Street, Elko, Nevada.

SUPPLEMENTARY INFORMATION: The land has been identified as suitable for disposal by the Elko Resource Management Plan. The land is not needed for any resource program and is not suitable for management by the Bureau or another Federal department or agency. The proposal has been reviewed and approved by the Elko County Planning Commission.

The land is prospectively valuable for oil and gas. Therefore, the mineral estate, excluding oil and gas, will be conveyed simultaneously with the sale of the surface estate. Acceptance of the direct sale offer will constitute an application to purchase the mineral estate having no known value. A nonrefundable fee of $50.00 will be required with the purchase money. Failure to submit the purchase money and the nonrefundable filing fee for the mineral estate within the time frame specified by the authorized officer will result in cancellation of the sale.

Upon publication of this Notice of Realty Action in the **Federal Register** the lands will be segregated from all forms of appropriation under the public land laws, including the mining laws, but not the mineral leasing laws or disposals pursuant to Sections 203 and 209 of FLPMA. The segregation shall terminate upon issuance of a patent or other document of conveyance, upon publication in the **Federal Register** of a Notice of Termination of Segregation, or 270 days from date of this publication, whichever occurs first.

The patent, when issued, will contain the following reservations to the United States:

1. A right-of-way thereon for ditches and canals constructed by the authority of the United States, Act of August 30, 1890, (43 U.S.C. 945).

2. Oil and gas.

And would be subject to:

Those rights for powerline purposes granted to Sierra Pacific Power Co., its successors or assigns, by right-of-way N–37156, pursuant to the Act of October 21, 1976 (43 U.S.C. 1761).

For a period of 45 days from the date of publication in the **Federal Register**, interested parties may submit comments

to the Elko District Office, Bureau of Land Management, P.O. Box 831, Elko, NV 89803. Any adverse comments will be evaluated by the State Director, who may sustain, vacate or modify this realty action and issue a final determination. In the absence of timely field objections, this realty action will become a final determination of the Department of the Interior.

Dated: March 8, 1995.

Rodney Harris,

District Manager.

[FR Doc. 95–6448 Filed 3–15–95; 8:45 am]

BILLING CODE 4310–HC–M

[UT–069–05–5700–11; UTU–70117]

Realty Action Recreation and Public Purposes (R&PP) Act Classification for Conveyance (Patent) of Public Lands in San Juan County, UT

AGENCY: Bureau of Land Management, Interior.

ACTION: Notice of Realty Action, UTU–70117, Recreation and Public Purposes (R&PP) Act Classification for Conveyance (Patent) of Public Lands in San Juan County, Utah.

SUMMARY: Notice is given that the following public lands in San Juan County, Utah have been examined and found suitable for classification for conveyance (patent) to San Juan County under the provisions of the Recreation and Public Purposes Act, as amended and supplemented (43 U.S.C. 869 *et seq.*). San Juan County proposes to use the lands for a regional sanitary landfill site.

Salt Lake Meridian, Utah

T. 39 S., R. 22 E.
Section 3, W2SWSW, SESWSW, S2NESWSW, S2SWSESW;
Section 4, S2SE;
Section 9, NE;
Section 10, W2NW, W2NENW, NWSENW.

The above described land aggregates 390.00 acres more or less.

A plan amendment has been completed and is being reviewed by the public. This amendment, if approved, would allow these lands to be available for disposal under the Recreation and Public Purposes Act for a regional sanitary landfill site.

The Patent, When Issued, Will Be Subject to the Following Terms, Conditions and Reservations

1. Provisions of the Recreation and Public Purposes Act and to all applicable regulations of the Secretary of the Interior.

2. A right-of-way will be reserved for ditches and canals constructed by the authority of the United States (Act of August 30, 1890, 26 Stat, 391; 43 U.S.C. 945).

3. All minerals, including oil and gas, shall be reserved to the United States, together with the right to prospect for, mine and remove the minerals.

4. The conveyance of the land will be subject to all valid existing rights, reservations, and privileges of record. Existing rights, reservations, and privileges of record include, but are not limited to:

a. Those rights for powerline purposes granted to PacifiCorp dba UP & L, its successors or assignees by Right-of-Way Numbers UTU–24973, UTU–57106, and UTU–64139.

b. Any other reservations the Authorized Officer determines appropriate to ensure public access and proper management of Federal lands and interests therein.

5. The San Juan County, its successors or assigns, assumes all liability for and shall defend, indemnify, and save harmless the United States and its officers, agents, representatives, and employees (hereinafter referred to in this clause as the United States), from all claims, loss, damage, actions, causes of action, expense, and liability (hereinafter referred to in this clause as claims) resulting from, brought for, or on account of, any personal injury, threat of personal injury, or property damage received or sustained by any person or persons (including the patentee's employees) or property growing out of, occurring, or attributable directly or indirectly, to the disposal of solid waste on, or the release of hazardous substances from the land described above, regardless of whether such claims shall be attributable to: (1) the concurrent, contributory, or partial fault, failure, or negligence of the United States, or (2) the sole fault, failure, or negligence of the United States.

6. Provided, that the title shall revert to the United States upon a finding, after notice and opportunity for a hearing, that the patentee has not substantially developed the lands in accordance with the approved plan of development on or before the date five years after the date of conveyance. No portion of the land shall under any circumstance revert to the United States if any such portion has been used for solid waste disposal or for any other purpose which may result in the disposal, placement, or release of any hazardous substance.

7. If, at any time, the patentee transfers to another party ownership of any portion of the land not used for the purpose(s) specified in the application and approved plan of development, the patentee shall pay the Bureau of Land Management the fair market value, as determined by the authorized officer, of the transferred portion as of the date of transfer, including the value of any improvements thereon.

8. The above described land has been conveyed for utilization as a regional sanitary landfill. Upon closure, the site may contain small quantities of commercial and household hazardous waste as determined in the Resource Conservation and Recovery Act of 1976, as amended (42 U.S.C. 6901), and defined in 40 CFR 261.4 and 261.5. Although there is no indication these materials pose any significant risk to human health or the environment, future land uses should be limited to those which do not penetrate the liner or final cover of the landfill unless excavation is conducted subject to applicable State and Federal requirements.

Publication of this notice in the **Federal Register** constitutes notice to the grazing permittee, Adams Livestock Company, that their grazing lease is directly effected by this action. Specifically, the subject lands are presently used for livestock grazing, involving the White Mesa Allotment—#06840. The Adams Livestock Company (Grazing Record # 436615—cattle) holds the grazing privileges for the 390.00 acre parcel. The estimated permitted grazing capacity of these lands is 19 AUMs, however, there would be no reduction in the permittee's grazing preference as a result of this action. The land (acreage) will have to be excluded from the allotment effective upon issuance of the patent. There are no authorized range improvements on the subject lands.

Upon publication of this notice in the **Federal Register**, the lands will be segregated from all other forms of appropriation under the public land laws, including the general mining laws, except for conveyance under the Recreation and Public Purposes Act and leasing under the mineral leasing laws.

DATES: For a period of 45 days from the date of publication of this notice in the **Federal Register**, interested persons may submit comments regarding the proposed conveyance or classification of the lands to the Moab District Manager, Bureau of Land Management, 82 East Dogwood Drive, Suite M, Moab, Utah 84532.

CLASSIFICATION COMMENTS: Interested parties may submit comments involving the suitability of the land for a regional sanitary landfill. Comments on the classification are restricted to whether the land is physically suited for the proposal, whether the use will

maximize the future use or uses of the land, whether the use is consistent with local planning and zoning, or if the use is consistent with State and Federal programs.

APPLICATION COMMENTS: Interested parties may submit comments regarding the specific use proposed in the application and plan of development, whether the BLM followed proper administrative procedures in reaching the decision, or any other factor not directly related to the suitability of the land for a regional sanitary landfill.

Any adverse comments will be reviewed by the State Director. In the absence of any adverse comments, the classification will become effective 60 days from the date of publication of this notice in the **Federal Register**.

SUPPLEMENTARY INFORMATION: Detailed information concerning this action may be obtained from Brent Northrup, Acting Area Manager, San Juan Resource Area, 435 North Main Street, P.O. Box 7, Monticello, Utah 84535, (801) 587–2141 or Brad Groesbeck, District Realty Specialist, Moab District Office, 82 East Dogwood Drive, Suite M, Moab, Utah 84532, (801) 259–2115.

Dated: March 6, 1995.

Katherine Kitchell,

District Manager.

[FR Doc. 95–6449 Filed 3–15–95; 8:45 am]

BILLING CODE 4310–DQ–P

[MT–930–1430–01; MTM 82124]

Conveyance of Public Lands, Beaverhead, Madison, and Yellowstone Counties; MT

AGENCY: Bureau of Land Management, Interior.

ACTION: Notice.

SUMMARY: This order informs the public and interested state and local governmental officials of the conveyance of 814.39 acres of public lands out of Federal ownership.

The land acquired in the exchange provides recreation access to the Madison River. The public is well served through completion of this land exchange.

EFFECTIVE DATE: June 8, 1995.

FOR FURTHER INFORMATION CONTACT: Sandra Ward, BLM Montana State Office, P.O. Box 36800, Billings, Montana 59107, 406–255–2949.

SUPPLEMENTARY INFORMATION: 1. Notice is hereby given that in an exchange of land made pursuant to Section 206 of the Federal Land Policy and Management Act of 1976, 43 U.S.C. 1716, the following described lands were transferred from Federal to private ownership:

Gabel Construction Inc.

Principal Meridian, Montana

T. N., R. 27 E.,
Sec. 35, lots 21 and 22.

Elmer F. Link

Principal Meridian, Montana

T. 2 N., R. 27 E.,
Sec. 36, lot 5. 2.

Otto R. Miller, Jr. and Charlene J. Miller

Principal Meridian, Montana

T. 7 S., R. 9 W.,
Sec. 11, S½NE¼NW¼SE, SE¼NW¼SE¼, W½NW¼SE¼, NE¼SE¼, S½SE¼, SE¼SW¼;
Sec. 13, NW¼SW¼;
Sec. 14, lots 1, 2, 3, and 5.

Beaverhead Madison Broadcasting Inc.

Principal Meridian, Montana

T. 7 S., R. 9 W.,
Sec. 11, N½NE¼NW¼SE¼.

Turner Enterprises, Inc.

Principal Meridian, Montana

T. 2 S., R. 1 E.,
Sec. 26, NW¼NE¼.

Valley Garden Ranch, Inc.

Principal Meridian, Montana

T. 5 S., R. 1 W.,
Sec. 18, lots 1 and 2;
Sec. 20, N½NW¼.

Rice Ranches, A Montana Corporation

Principal Meridian, Montana

T. 2 S., R. 1 E.,
Sec. 31, lots 1 and 2, and E½NW¼.
T. 2 S., R. 2 E.,
Sec. 33, lot 2.

Moorse Creek Grazing Association

Principal Meridian, Montana

T. 6 S., R. 2 W.,
Sec. 2, SW¼NE¼.

The areas described aggregate 814.39 acres in Beaverhead, Madison, and Yellowstone Counties.

2. In the exchange, the following described land has been reconveyed to the United States:

Principal Meridian, Montana

T. 3 S., R. 1 E.,
Sec. 10, lots 2 and 4, excluding therefrom the area contained within the state highway right-of-way lines, more particularly described in Bargain and Sale Deed recorded in Book 162, Page 148, Records of Madison County, Montana.

The area described contains 33.88 acres in Madison County.

Dated: March 6, 1995.

John E. Moorhouse,

Acting Deputy State Director, Division of Lands and Renewable Resources.

[FR Doc. 95–6496 Filed 3–15–95; 8:45 am]

BILLING CODE 4310–DN–P

[OR–120–6332–00; GP5–086]

Notice of Review Period on Draft Interim Management Plan for Cape Blanco Lighthouse Site

AGENCY: Bureau of Land Management, Interior.

ACTION: Notice.

SUMMARY: The Bureau of Land Management has prepared a Draft Interim Management Plan for Cape Blanco Lighthouse site. The lighthouse site is located approximately 5 miles northwest of Port Orford, OR. The interim management plan will provide direction and management strategies during the five year permit period.

DATES: Comments should be submitted by April 17, 1995.

ADDRESSES: Comments should be sent to Myrtlewood Area Manager, BLM, 1300 Airport Lane, North Bend, OR 97459.

FOR FURTHER INFORMATION CONTACT: Raymond Orazem, BLM, Myrtlewood Resource Area, 503–756–0100.

SUPPLEMENTARY INFORMATION: On April 4, 1994, the U.S. Coast Guard issued the BLM an interagency permit which authorizes BLM to access the headland and lighthouse interior for public access, interpretation and tours. This project is a cooperative effort between the U.S. Coast Guard, Bureau of Land Management, Oregon Parks and Recreation Department, Oregon State Historic Preservation Office, Advisory Council on Historic Preservation, the Confederated Tribes of Siletz Indians of Oregon and the Coquille Indian Tribe.

Dated: March 7, 1995.

Neal Middlebrook,

Area Manager, Myrtlewood Resource Area.

[FR Doc. 95–6494 Filed 3–15–95; 8:45 am]

BILLING CODE 4310–33–P

Supplementary Rules for Certain Public Lands Managed by the Bureau of Land Management Within the Yuba Reservoir Recreation Management Area (RMA), Richfield District, Utah

SUMMARY: These supplementary rules are necessary for the management of actions, activities, and public use on certain public lands which may have or are having adverse impacts on persons using public lands, on property, and on resources located on public lands

located in, or acquired for inclusion within, the Yuba Reservoir RMA.

The affected lands are located in the following areas:

Salt Lake Base Meridian

T.16 S., R.1 W.,
Sec. 19—All public lands south of the Old Botham Road;
Sec. 30—All public lands;
Sec. 31—All public lands.
T.16 S., R.2 W.,
Sec. 13—W½ SW¼;
Sec. 14—SW¼ NE¼, SE¼, E½ SW¼;
Sec. 23—E½ NW¼, E½, E½ SW¼;
Sec. 24—W½, W½ NW¼, W½ SE¼;
Sec. 25—All
Sec. 26—NE¼, E½ SE¼, S½ SW¼, NW¼ NW¼, S½ NW¼;
Sec. 35—E½ NE¼, NE¼ SE¼.
T.17 S., R.1 W.,
Sec. 4—All public lands west of S.R. 28;
Sec. 5—All public lands;
Sec. 6—All public lands;
Sec. 7—All public lands;
Sec. 8—All public lands;
Sec. 9—All public lands west of S.R. 28.
T. 17 S., R.2 W.,
Sec. 1—SE¼ NE¼, SE¼;
Sec. 12—E½.

FOR FURTHER INFORMATION CONTACT: Lynn Fergus, Bureau of Land Management, House Range Resource Area Office, P.O. Box 778 Fillmore, Utah 84631. Telephone: 801–743–6811.

SUPPLEMENTARY INFORMATION: The Utah State Director of the Bureau of Land Management is establishing these supplementary rules which are necessary for the protection of persons, property and public lands and resources within the Yuba Reservoir RMA, lands acquired for inclusion in the Yuba Reservoir RMA, and all lands that may be incorporated into Yuba Reservoir RMA, in the Richfield District, as provided for in 43 CFR 8365.1–6. Violations of these rules are punishable by a fine not to exceed $100,000.00 or imprisonment not to exceed 12 months, or both, as provided for under the Federal Land Policy and Management Act (Pub. L. 94–579) as amended by 18 U.S.C. 3571(b)(5). These rules are in addition to and supplement the rules found in 43 CFR 8300.

Supplementary Rules, Yuba Reservoir Recreation Management Area

Section 1.0 Administrative provisions

1.1 Permits

(a) An authorized officer may issue a permit to authorize an otherwise prohibited or restricted activity. Such permits may contain reasonable restrictions necessary to preserve and protect public lands and their resources, and to minimize interference with and inconvenience to other visitors.

(b) Violation of the terms and conditions of a permit is prohibited.

Section 2.0 Vehicle Operations and Traffic Safety

2.1 Unsafe Operation

The following are prohibited:

(a) Failing to maintain that degree of control of a vehicle necessary to avoid danger to persons, property or wildlife.

(b) Operating a motor vehicle in a manner which unnecessarily causes its tires to squeal, skid, or break free of the road surface.

(c) Operating a vehicle without due care or at a speed greater than that which is reasonable and prudent considering wildlife, pedestrians, traffic, weather, road and light conditions and road character.

2.2 Obstructing Traffic

The following are prohibited:

(a) Stopping, parking, or leaving any vehicle, whether attended or unattended, upon the paved, graded, or maintained surface of a road, so as to leave less than ten (10) feet of the width of the same traffic lane for the free or unobstructed movement of other vehicles is prohibited, except in the event of accident or other conditions beyond the embedded control of the operator, or as otherwise directed by an authorized person.

(b) Causing or permitting a vehicle under one's control to obstruct traffic by driving so slowly as to interfere with the normal flow of traffic, or in any other manner, is prohibited.

2.3 Traffic Control Device

Failure to comply with the directions of a traffic control device is prohibited unless directed otherwise by an authorized person.

Section 3.0 Public Use and Recreation

3.1 Weapons

(a) The following are prohibited within Yuba Reservoir RMA:

(1) Possession of a loaded weapon, except as authorized under subsection (b), following.

(2) Intentional discharge of any weapon, except as authorized under subsection (b), following.

(b) The possession of loaded weapons, and their use, is allowed when the possessor is at the time involved in hunting within the Yuba Reservoir RMA in accordance with state law.

3.2 Glass Containers

The possession of glass containers, except within vehicles, is prohibited.

3.3 Preservation of Natural and Cultural Resources

(a) The following are prohibited:

(1) Possessing, destroying, taking, injuring, defacing, removing, harassing, or disturbing from its natural state; living or dead wildlife, or the parts or products thereof, such as antlers or nests, except when incident to hunting conducted in accordance with state law.

(2) Introducing wildlife, fish, or plants, including their reproductive bodies, into Yuba Reservoir RMA, except when authorized by the District Manager for administrative activities, or pursuant to the terms and conditions of a permit.

(3) Collecting live wood or other living plant material for use in a campfire or for any other purpose.

(4) Possessing, destroying, defacing, digging, or removing rocks or cave formations or parts thereof, or fossilized or non-fossilized paleontological specimens.

(5) Digging for, removing, destroying, damaging, disturbing, or possessing artifacts, rock art, or other cultural resources.

(6) Applying chalk to, making a rubbing of, making a casting of, painting upon, or making a latex or other mold of, any rock art.

3.4 Pets

(a) The following are prohibited:

(1) Allowing a pet to make noise that is unreasonable considering location, time of day or night, and impact on public land users.

(2) Failing to remove waste deposited by a pet at beaches and developed sites including, campgrounds, picnic areas, parking areas, and visitor centers.

(3) Allowing a pet, other than a seeing-eye dog, hearing-ear dog, or other animal specifically trained to assist a disabled person, to enter buildings operated by the Bureau of Land Management or the Utah Division of Parks and Recreation.

(4) Leaving a pet unattended and tied to an object.

(b) Pets or feral animals that are running-at-large and observed in the act of killing, injuring, or molesting humans, livestock, or wildlife may he destroyed by an authorized person, if necessary, for public safely or the protection of livestock or wildlife.

(c) Pets running-at-large may be impounded, and may be turned over to Juab County Animal Control or to another appropriate organization which will accept, care for, and dispose of such pets. The owner of such pets may be charged reasonable fees for kennel or boarding costs, feed, veterinary care, and transportation.

(d) This section does not apply to dogs used by authorized Federal, State, and local law enforcement officers in the performance of their official duties.

3.5 Alcoholic Beverages

(a) The use and possession of alcoholic beverages within the Yuba Reservoir RMA allowed in accordance with the provisions of this section:

(1) The following are prohibited:

(i) The sale or gift of an alcoholic beverage to a person under 21 years of age.

(ii) The possession of an alcoholic beverage by a person under 21 years of age.

(b) The District Manager may close all or a portion of public buildings, or structures, parking lots, picnic areas, overlooks, walkways, historic areas, or archeological sites within Yuba Reservoir RMA to the consumption of alcoholic beverages when it is determined that:

(1) The consumption of alcohol would be inappropriate considering other uses of the location and the purpose for which it is maintained or established.

(2) Incidents of aberrant behavior related to the consumption of alcohol are of such magnitude that diligent attempts to enforce applicable regulations do not alleviate the problem.

(3) Such closures maybe either by publication of the closure in the **Federal Register**, by the posting of appropriate signs, or both.

3.6 Disorderly Conduct

A person commits disorderly conduct when, with intent to cause public alarm, nuisance, jeopardy or violence, or knowingly or recklessly creating a risk thereof, such person commits any of the following prohibited acts:

(a) Engages in fighting or threatening, or violent behavior.

(b) Uses language, an utterance or gesture, or engages in a display or act that is obscene, physically threatening or menacing, or done in a manner that is likely to inflict injury or incite an immediate breach of the peace.

3.7 Property

(a) The following are prohibited:

(1) Abandoning property.

(2) Leaving property unattended for more than 24 hours in a day use area, or 72 hours in other areas, unless the owner of the property by permit or registration is specifically authorized a longer period of time.

(3) Failing to turn in found property to an authorized person as soon as practical.

(b) Impoundment of property:

(1) Property left unattended in excess of the time limits in subsection (a)(2). above, may be impounded by an authorized person.

(2) Unattended property that interferes with visitor safety, orderly management of the Yuba Reservoir RMA, or presents a threat to public land resources may be impounded by an authorized person at any time.

(3) The owner of record is responsible and liable for charges to the person who has removed, stored, or otherwise disposed of property impounded relevant to this section.

(c) Disposition of property:

Unattended property impounded pursuant to this section shall be deemed to be abandoned unless claimed by the owner or an authorized representative thereof within 60 days, and shall be disposed of in accordance with applicable regulations.

3.8 Camping

(a) By the posting of appropriate signs at the entrance to any campground or use area, the District Manager may establish special conditions or rules for use of any use area. Violation or such conditions or rules is prohibited.

(b) The following are prohibited:

(1) Failing to obtain a permit when required.

(2) Violation of the terms and conditions of any permit.

3.9 Tampering and Vandalism

The following are prohibited:

(a) Tampering or attempting to tamper with property or real property, or moving, manipulating, or setting in motion any of the parts thereof, except when such property is under one's lawful control or possession.

(b) Destroying, injuring, defacing, or damaging property or real property.

3.10 Closures

(a) The existing OHV closures of the Yuba Reservoir RMA will remain in effect and become permanent. Only that area west of old U.S. Highway 91 will remain open to use of existing roads and trails, and only between the hours of 6am and 10pm.

3.11 Public Assemblies or Meetings

(a) Public assemblies, meetings, gatherings, demonstrations, parades and other public expressions of views are allowed within the Yuba Reservoir RMA, provided a permit therefor has been issued by the manager of the Yuba Reservoir RMA and a mass gathering permit, if over 25 participants, has been obtained from the Juab County Sheriff.

3.12 Spray Paint

The following are prohibited:

(a) The use of spray paint or paint-ball guns within Yuba Reservoir RMA, except for:

(1) The official business of any federal, state, county, or local governmental entity, or

(2) The necessary performance of work related to the maintenance or construction of any authorized improvements or facilities on public lands.

(b) The possession of spray paint within the Yuba Reservoir RMA, except when such containers of spray paint are:

(1) Located in the trunk of a motor vehicle, or

(2) If a motor vehicle is not equipped with a trunk, in some other portion of the motor vehicle designed for the storage of luggage and not normally occupied by or readily accessible to the operator or passengers.

3.13 Fees

With the publication of these rules, a daily use fee of $5.00 per vehicle is established. An additional fee is not required for towed vehicles or trailers.

(a) Self serve pay stations will be established for the periods when the entrances are not manned.

(b) Use of the area without a use permit will subject the user to an additional $10 field collection fee.

(c) Falsifying or otherwise intentionally misusing a permit is prohibited.

March 7, 1995.

Jerry Goodman,

District Manager.

[FR Doc. 95–6445 Filed 3–15–95; 8:45 am]

BILLING CODE 4310–DQ–P

[CO–942–95–1420–00]

Colorado: Filing of Plats of Survey

March 8, 1995.

The plats of survey of the following described land will be officially filed in the Colorado State Office, Bureau of Land Management, Lakewood, Colorado, effective 10:00 a.m. on March 8, 1995.

The plat representing the dependent resurvey of a portion of the west boundary, the subdivisional lines, the subdivision of section 19 and the metes-and-bounds survey in section 19, T. 7 N., R. 94 W., Sixth Principal Meridian, Colorado, Group No. 1084, was accepted January 20, 1995.

The plat representing the dependent resurvey of portions of the west boundary, the subdivisional lines, and the metes-and-bounds survey of private land claims of T. 8 S., R. 99 W., Sixth Principal Meridian, Colorado, Group

No. 1012, was accepted December 16, 1994.

The supplemental plat, creating new lots 5 and 6 from original lot 3 in section 3, T. 6 S., R. 87 W. Sixth Principal Meridian, Colorado, was accepted February 1, 1995.

The supplemental plat, creating new lots 17 and 18 from original lot 5 in section 10, and new lots 17 and 18 from original lot 1 in section 16, T. 13 S., R. 92 W. Sixth Principal Meridian, Colorado, was accepted February 1, 1995.

These surveys were executed to meet certain administrative needs of this Bureau.

The plat in two sheets represents the dependent resurvey of Homestead Entry Survey No. 343 and the metes-and-bounds survey of Tract 37, T. 10 N., R. 84 W., Sixth Principal Meridian, Colorado, Group No. 932, was accepted January 11, 1995.

The plat representing the dependent resurvey of portions of the Second Standard Parallel North (S. bdy., T. 9 N., R. 75 W.), the subdivisional lines, the subdivision of certain sections and tracts 37 and 38 and the subdivision of a portion of section 11 and the metes-and-bounds surveys in section 11 of T. 8 N., R. 75 W., Sixth Principal Meridian, Colorado, Group No. 939, was accepted December 29, 1994.

These surveys were executed to meet certain administrative needs of the U.S. Forest Service.

The plat representing the dependent resurvey of a portion of the Colorado and Oklahoma state boundary from the Mile Corner 25 to Mile Corner 28, a portion of the 6th Auxiliary Correction Line South (N. Bdy.), and the west boundary, a portion of the subdivisional lines and a portion of certain tracts of fractional T. 35 S., R. 45 W., Sixth Principal Meridian, Colorado, Group No. 1044 and 1067, was accepted January 30, 1994.

The plat representing the dependent resurvey of a portion of the subdivisional lines of T. 34 S., R. 45 W., Sixth Principal Meridian, Colorado, Group No. 1067, was accepted January 30, 1994.

The plat representing the dependent resurvey of a portion of the 6th Auxiliary Correction Line South (S. Bdy.), a portion of the east boundary, a portion of the north boundary, a portion of the subdivisional lines and portions of certain tracts of T. 34 S., R. 46 W., Sixth Principal Meridian, Colorado, Group No. 1067, was accepted January 30, 1994.

The remonumentation of the south 1/16 section corner of sections 33 and 34 of T. 48 N., R. 11 E., New Mexico Principal Meridian, Colorado, Group No. 750, was accepted September 14, 1994.

The remonumentation of certain private land claim corners of T. 18 S., R. 72 W., Sixth Principal Meridian, Colorado, Group No. 750, was accepted September 14, 1994.

These surveys were executed to meet certain administrative needs of the Colorado Department of Transportation.

All inquiries about this land should be sent to the Colorado State Office, Bureau of Land Management, 2850 Youngfield Street, Lakewood, Colorado 80215.

Darryl A. Wilson,

Chief Cadastral Surveyor for Colorado.

[FR Doc. 95–6490 Filed 3–15–95; 8:45 am]

BILLING CODE 4310–JB–P

Fish and Wildlife Service

Notice of Receipt of Applications for Permit

The following applicants have applied for a permit to conduct certain activities with endangered species. This notice is provided pursuant to Section 10(c) of the Endangered Species Act of 1973, as amended (16 U.S.C. 1531, *et seq.*):

PRT–703757

Applicant: Tarzan Zerbini Circus, Webb City, MO.

The applicant requests the renewal of a permit to re-export and re-import to and from Canada, 9 female Asian elephants (*Elephas maximus*) taken from the wild prior to 1971, two female Bengal tigers (*Panthera tigris*) born Dec. 7, 1966, and 9 male and 10 female captive-bred Bengal tigers (*Panthera tigris*) for the purpose of enhancement of the survival of the species through conservation education.

PRT–799726.

Applicant: Duke University Primate Center, Durham, NC.

The applicant requests a permit to import tissue samples from captive white-fronted lemurs (*Lemur fulvus albifrons*) at Parc Ivoloina, Madagascar for scientific research.

PRT–799733.

Applicant: Richard Limbach, Morse Bluff, NE.

The applicant requests a permit to import the sport-hunted trophy of one male bontebok (*Damaliscus dorcas dorcas*) culled from the captive herd maintained by F.W.M. Bowker, Thornkoof, Grahamstown, Republic of South Africa, for the purpose of enhancement of the survival of the species.

PRT–799778

Applicant: Gladys Porter Zoo, Brownsville, TX.

The applicant requests a permit to export four captive-hatched Philippine crocodiles (*Crocodylus mindorensis*) to Silliman University, Dumaguete City, Philippines, for the purpose of enhancement of propagation and survival of the species through captive breeding.

PRT–676379/675990

Applicant: National Marine Fisheries Service, Southeast Region, St. Petersburg, FL.

The applicant requests a permit to import 180 live Kemp's ridley sea turtle hatchlings (*Lepidochelys kempii*) each year for the next two years for the purposes of enhancement of the survival of the species through internal wire-tagging and turtle excluder device development studies. These turtles will be held for up to 2 years then released in the Gulf of Mexico.

Written data or comments should be submitted to the Director, U.S. Fish and Wildlife Service, Office of Management Authority, 4401 North Fairfax Drive, Room 420(c), Arlington, Virginia 22203 and must be received by the Director within 30 days of the date of this publication.

Documents and other information submitted with these applications are available for review, subject to the requirements of the Privacy Act and Freedom of Information Act, by any party who submits a written request for a copy of such documents to the following office within 30 days of the date of publication of this notice: U.S. Fish and Wildlife Service, Office of Management Authority, 4401 North Fairfax Drive, Room 420(c), Arlington, Virginia 22203. Phone: (703/358–2104); FAX: (703/358–2281).

Dated: March 10, 1995.

Caroline Anderson,

Acting Chief, Branch of Permits, Office of Management Authority.

[FR Doc. 95–6441 Filed 3–15–95; 8:45 am]

BILLING CODE 4310–55–P

Receipt of Application(s) for Permit

The following applicant has applied for a permit amendment to conduct certain activities with endangered species. This notice is provided pursuant to Section 10(c) of the Endangered Species Act of 1973, as amended (16 U.S.C. 1531, *et seq.*).

PRT–799099

Applicant: Dale W. Stahlecker, Santa Fe, New Mexico.

The applicant requests a permit to include take activities for the Southwestern willow flycatcher (*Empidonax traillii extimus*) for the purpose of scientific research and enhancement of propagation and survival of the species as prescribed by Service recovery documents.

ADDRESSES: Written data or comments should be submitted to the Assistant Regional Director, Ecological Services, U.S. Fish and Wildlife Service, P.O. Box 1306, Albuquerque, New Mexico 87103, and must be received by the Assistant Regional Director within 30 days of the date of this publication.

Documents and other information submitted with this application are available for review, subject to the requirements of the Privacy Act and Freedom of Information Act, by any party who submits a written request for a copy of such documents to the above office within 30 days of the date of publication of this notice. (See **ADDRESSES** above.)

James A. Young,

Acting Regional Director, Region 2, Albuquerque, New Mexico.

[FR Doc. 95–6465 Filed 3–15–95; 8:45 am]

BILLING CODE 4310–55–M

Availability of an Environmental Assessment/Habitat Conservation Plan and Receipt of Application for Incidental Take Permit for Construction of One Single Family Residence on Lot 35, Block H, Epping Forest Cover, Long Canyon, Austin, Travis County, TX

AGENCY: Fish and Wildlife Service, Interior.

ACTION: Notice.

SUMMARY: Larry W. James (Applicant) has applied to the Fish and Wildlife Service (Service) for an incidental take permit pursuant to Section 10(a) of the Endangered Species Act (Act). The Applicant has been assigned permit number PRT–798674. The requested permit, which is for a period of 5 years, would authorize the incidental take of the endangered golden-cheeked warbler *(Dendroica chrysoparia).* The proposed take would occur as a result of the construction of one single-family residence on Epping Forest Cove, Long Canyon, Austin, Travis County, Texas.

The Service has prepared the Environmental Assessment/Habitat Conservation Plan (EA/HCP) for the incidental take application. A determination of jeopardy to the species or a Finding of No Significant Impact (FONSI) will not be made before 30 days from the date of publication of this notice. This notice is provided pursuant to Section 10(c) of the Act and National Environmental Policy Act regulations (40 CFR 1506.6).

DATES: Written comments on the application and EA/HCP should be received on or before April 17, 1995.

ADDRESSES: Persons wishing to review the application may obtain a copy by writing to the Assistant Regional Director, Ecological Services, U.S. Fish and Wildlife Service, P.O. Box 1306, Albuquerque, New Mexico 87103. Persons wishing to review the EA/HCP may obtain a copy by contacting Joseph E. Johnston, Ecological Services Field Office, 10711 Burnet Road, Suite 200, Austin, Texas 78758 (512/490–0063). Documents will be available for public inspection by written request, by appointment only, during normal business hours at the Ecological Services Field Office (8:00 to 4:30), at the above address in Austin, Texas. Written data or comments concerning the application should be submitted to the Acting Field Supervisor, Ecological Services Field Office, Austin, Texas (see **ADDRESSES** above). Please refer to permit number PRT–798674 when submitting comments.

FOR FURTHER INFORMATION CONTACT: Joseph E. Johnston at the above Austin Ecological Service Field Office.

SUPPLEMENTARY INFORMATION: Section 9 of the Act prohibits the ''taking'' of endangered species such as the golden-cheeked warbler. However, the Service, under limited circumstances, may issue permits to take endangered wildlife species incidental to, and not the purpose of, otherwise lawful activities. Regulations governing permits for endangered species are at 50 CFR 17.22.

Larry W. James plans to construct a single-family residence on Lot 35 of Long Canyon Subdivision, Travis County, Texas. This action will eliminate less than one half acre of land and indirectly impact less than four additional acres of golden-cheeked warbler habitat per residence. The applicant proposes to compensate for this incidental take of golden-cheeked warbler habitat by placing $1,500 into the City of Austin Balcones Canyonlands Conservation Fund to acquire/manage lands for the conservation of the golden-cheeked warbler.

Alternatives to this action were rejected because selling or not developing the subject property with federal listed species present was not economically feasible.

James A. Young,

Acting Regional Director, Region 2, Albuquerque, New Mexico.

[FR Doc. 95–6466 Filed 3–15–95; 8:45 am]

BILLING CODE 4310–55–M

Availability of an Environmental Assessment/Habitat Conservation Plan and Receipt of Application for Incidental Take Permit for Construction of One Single Family Residence on Lots 9 and 10, Block C, Section 6, Talbot Lane, Rob Roy on the Creek, Austin, Travis County, TX

AGENCY: Fish and Wildlife Service, Interior.

ACTION: Notice.

SUMMARY: Peter Van Cuylenburg (Applicant) has applied to the Fish and Wildlife Service (Service) for an incidental take permit pursuant to Section 10(a) of the Endangered Species Act (Act). The Applicant has been assigned permit number PRT–798667. The requested permit, which is for a period of 5 years, would authorize the incidental take of the endangered golden-cheeked warbler (*Dendroica chrysoparia*). The proposed take would occur as a result of the construction of one single-family residence on Talbot Lane, Rob Roy on the Creek, Austin, Travis County, Texas.

The Service has prepared the Environmental Assessment/Habitat Conservation Plan (EA/HCP) for the incidental take application. A determination of jeopardy to the species or a Finding of No Significant Impact (FONSI) will not be made before 30 days from the date of publication of this notice. This notice is provided pursuant to Section 10(c) of the Act and National Environmental Policy Act regulations (40 CFR 1506.6).

DATES: Written comments on the application and EA/HCP should be received on or before April 17, 1995.

ADDRESSES: Persons wishing to review the application may obtain a copy of writing to the Assistant Regional Director, Ecological Services, U.S. Fish and Wildlife Service, P.O. Box 1306, Albuquerque, New Mexico 87103. Persons wishing to review the EA/HCP may obtain a copy by contacting Joseph E. Johnston, Ecological Services Field Office 10711 Burnet Road, Suite 200, Austin, Texas 78758 (512/490–0063). Documents will be available for public inspection by written request, by appointment only, during normal

business hours at the Ecological Services Field Office (8:00 to 4:30), at the above address in Austin, Texas. Written data or comments concerning the application should be submitted to the Acting Field Supervisor, Ecological Services Field Office, Austin, Texas (see **ADDRESSES** above). Please refer to permit number PRT–798667 when submitting comments.

FOR FURTHER INFORMATION CONTACT: Joseph E. Johnston at the above Austin Ecological Service Field Office.

SUPPLEMENTARY INFORMATION: Section 9 of the Act prohibits the ''taking'' of endangered species such as the golden-cheeked warbler. However, the Service, under limited circumstances, may issue permits to take endangered wildlife species incidental to, and not the purpose of, otherwise lawful activities. Regulations governing permits for endangered species are at 50 CFR 17.22.

Peter Van Cuylenburg plans to construct a single-family residence on Lots 9 and 10, Block C, Section 6, Rob Roy on the Creek Subdivision, Travis County, Texas. This action will eliminate less than one half acre of land and indirectly impact less than four additional acres of golden-cheeked warbler per residence. The applicant proposes to compensate for this incidental take of golden-cheeked warbler habitat by placing $1,500 into the City of Austin Balcones Canyonlands Conservation Fund to acquire/manage lands for the conservation of the golden-cheeked warbler.

Alternatives to this action were rejected because selling or not developing the subject property with federally listed species present was not economically feasible.

James A. Young,

Acting Regional Director, Region 2, Albuquerque, New Mexico.

[FR Doc. 95–6468 Filed 3–15–95; 8:45 am]

BILLING CODE 4310–55–M

Availability of an Environmental Assessment/Habitat Conservation Plan and Receipt of Application for Incidental Take Permit for Construction of One Single Family Residence on Lot 37, Block G, Chambly Cove, Long Canyon, Austin, Travis County, TX

AGENCY: Fish and Wildlife Service, Interior.

ACTION: Notice.

SUMMARY: Charles E. Dixon (Applicant) has applied to the Fish and Wildlife Service (Service) for an incidental take permit pursuant to Section 10(a) of the Endangered Species Act (Act). The Applicant has been assigned permit number PRT–798532. The requested permit, which is for a period of 5 years, would authorize the incidental take of the endangered golden-cheeked warbler *(Dendroica chrysoparia).* The proposed take would occur as a result of the construction of one single-family residence on Chambly Cove, Long Canyon, Austin, Travis County, Texas.

The Service has prepared the Environmental Assessment/Habitat Conservation Plan (EA/HCP) for the incidental take application. A determination of jeopardy to the species or a Finding of No Significant Impact (FONSI) will not be made before 30 days from the date of publican of this notice. This notice is provided pursuant to Section 10(c) of the Act and National Environmental Policy Act regulations (40 CFR 1506.6).

DATES: Written comments on the application and EA/HCP should be received on or before April 17, 1995.

ADDRESSES: Persons wishing to review the application may obtain a copy by writing to the Assistant Regional Director, Ecological Services, U.S. Fish and Wildlife Service, P.O. Box 1306, Albuquerque, New Mexico 87103. Persons wishing to review the EA/HCP may obtain a copy by contacting Joseph E. Johnston, Ecological Services Field Office, 10711 Burnet Road, Suite 200, Austin, Texas 78758 (512/490–0063). Documents will be available for public inspection by written request, by appointment only, during normal business hours at the Ecological Services Field Office (8:00 to 4:30), at the above address in Austin, Texas. Written Data or comments concerning the application and EA/HCP should be submitted to the Acting Field Supervisor, Ecological Services Field Office, Austin, Texas (see **ADDRESSES** above). Please refer to permit Number PRT–798532 when submitting comments.

FOR FURTHER INFORMATION CONTACT: Joseph E. Johnston at the above Austin Ecological Service Field Office.

SUPPLEMENTARY INFORMATION: Section 9 of the Act prohibits the ''taking'' of endangered species such as the golden-cheeked warbler. However, the Service, under limited circumstances, may issue permits to take endangered wildlife species incidental to, and not the purpose of, otherwise lawful activities. Regulations governing permits for endangered species are at 50 CFR 17.22.

Charles E. Dixon plans to construct a single-family residence on Lot 37 of Long Canyon Subdivision, Travis County, Texas. This action will eliminate less than one half acre of land and indirectly impact less than one additional acre of golden-cheeked warbler habitat per residence. The Applicant proposes to compensate for this incidental take of golden-cheeked warbler habitat by placing $1,500 into the City of Austin Balcones Canyonlands Conservation Fund to acquire/manage lands for the conservation of the golden-cheeked warbler.

Alternatives to this action were rejected because selling or not developing the subject property with federally listed species present was not economically feasible.

James A. Young

Acting Regional Director, Region 2, Albuquerque, New Mexico.

[FR Doc. 95–6467 Filed 3–15–95; 8:45 am]

BILLING CODE 4310–55–M

INTERSTATE COMMERCE COMMISSION

[Finance Docket No. 32602]

The Indiana & Ohio Central Railroad Company, Inc.—Lease and Operation—West Central Ohio Port Authority

AGENCY: Interstate Commerce Commission.

ACTION: Notice of exemption.

SUMMARY: The Commission exempts from the prior approval requirements of 49 U.S.C. 11343–11345 the lease and operation by Indiana & Ohio Central Railroad Company, Inc., of the West Central Ohio Port Authority's (WESTCO PA) approximately 72.1 miles of rail line, formerly known as the Bellefontaine Cluster, in Clark, Champaign and Logan Counties, OH, subject to standard employee protective conditions. The Bellefontaine Cluster consists of: (1) The Bellefontaine Secondary Track, from milepost 98.8 near Bellefontaine, in Logan County, OH, to milepost 129.4, at a point of connection with the Catawba Secondary Track in Springfield, Clark County, OH; (2) the Catawba Secondary Track, from milepost 129.4, in Springfield, to milepost 130.6, at a point of connection with Consolidated Rail Corporation in Springfield; (3) the Catawba Secondary Track, from milepost 0.0 in Springfield, to milepost 17.2, at the end of the track in Mechanicsburg, Champaign County, OH; (4) the Urbana Industrial Track, from milepost 45.2 to milepost 50.03, in Urbana, Champaign County, OH; (5) the Urbana Secondary Track, from milepost 48.1, in Urbana, to milepost 54.2 in

Bowlusville, Clark County, OH; (6) the Maitland Secondary Track, from milepost 124.5, in Glen Echo, Clark County, OH, to milepost 132.6, near Springfield; (7) a portion of the former main line of the Erie Railroad, from milepost 351.5, near Glen Echo, to milepost 353.1 in Urbana; and (8) a portion of the Old St. Mary's Branch, from milepost 53.3 to milepost 52.73, in Bellefontaine.

DATES: This exemption is effective on April 15, 1995. Petitions to stay must be filed by March 31, 1995. Petitions to reopen must be filed by April 10, 1995.

ADDRESSES: Send pleadings referring to Finance Docket No. 32602 to: (1) Office of the Secretary, Case Control Branch, Interstate Commerce Commission, 1201 Constitution Avenue, N.W., Washington, DC 20423; and (2) Robert L. Calhoun, Sullivan & Worcester, Suite 1000, 1025 Connecticut Avenue, N.W., Washington, DC 20036.

FOR FURTHER INFORMATION CONTACT: Beryl Gordon, (202) 927–5610. [TDD for the hearing impaired: (202) 927–5721].

SUPPLEMENTARY INFORMATION: Additional information is contained in the Commission's decision. To purchase a copy of the full decision, write to, call, or pick up in person from: Dynamic Concepts, Inc., Room 2229, Interstate Commerce Commission Building, 1201 Constitution Ave., N.W., Washington, DC 20423. Telephone: (202) 289–4357/4359. [Assistance for the hearing impaired is available through TDD services (202) 927–5721.]

Decided: March 2, 1995.

By the Commission, Chairman McDonald, Vice Chairman Morgan, and Commissioners Simmons and Owen.

Vernon A. Williams,

Secretary.

[FR Doc. 95–6499 Filed 3–15–95; 8:45 am]

BILLING CODE 7035–01–P

DEPARTMENT OF JUSTICE

Drug Enforcement Administration

Joseph A. Zadrozny, M.D.; Revocation of Registration

On November 7, 1994, the Deputy Assistant Administrator, Office of Diversion Control, Drug Enforcement Administration (DEA), issued an Order to Show Cause to Joseph A. Zadronsky, M.D., of Waltham, Massachusetts. The Order to Show Cause proposed to revoke Dr. Zadrozny's DEA Certificate of Registration, AZ1230426, under 21 U.S.C. 824(a)(3) and 824(a)(5), and deny any pending applications for renewal of such registration under 21 U.S.C. 823(f).

The Order to Show Cause was served on Dr. Zadrozny on November 14, 1994. More than thirty days have passed since the Order to Show Cause was received by Dr. Zadrozny. The Drug Enforcement Administration has received no response from Dr. Zadrozny or anyone purporting to represent him.

Pursuant to 21 CFR 1301.54(d), the Deputy Administrator finds that Dr. Zadrozny has waived his opportunity for a hearing. Accordingly, under the provisions of 21 CFR 1301.54(e) and 1301.57, the Deputy Administrator enters his final order in this matter without a hearing and based on the investigative file.

The Deputy Administrator finds that between July and October 1988, Dr. Zadrozny submitted claims for medical services under the Medicaid program of the Massachusetts Department of Public Welfare, and received a total of $10,907 in payments. In addition, Dr. Zadrozny billed for services not performed in the treatment of patients involved in automobile accidents. These claims were later determined to be fraudulent since there was no evidence that Dr. Zadrozny actually performed these medical services.

On November 25, 1991, in the Suffolk County Superior Court, Commonwealth of Massachusetts, Dr. Zadrozny was charged with 43 felony counts related to the filing of false Medicaid claims and larceny. Following a jury trial, on August 28, 1992, Dr. Zadrozny was found guilty of one felony count of Medicaid fraud and a second count of larceny. Dr. Zadrozny was sentenced to two years imprisonment, with 18 months suspended, and placed on two years probation.

As a result of his program related convictions, effective March 4, 1993, the Department of Health and Human Services mandatorily excluded Dr. Zadrozny from participation in the Medicare program for a period of five years pursuant to 42 U.S.C. 1320a–7(a). Pursuant to 21 U.S.C. 824(a)(5), such exclusion constitutes a basis for the revocation of Dr. Zadrozny's DEA Certificate of Registration.

On November 18, 1992, the Massachusetts Board of Registration in Medicine (Board) issued a Statement of Allegations proposing to discipline Dr. Zadrozny based upon his criminal convictions; his excessive and fraudulent billing for services not performed under the Medicaid program; and his failure to maintain adequate medical records. On June 8, 1994, the Board revoked Dr. Zadrozny's license to practice medicine, and as a result, his Massachusetts controlled substance registration was automatically terminated.

The Deputy Administrator finds that as of June 8, 1994, Dr. Zadrozny was no longer authorized to handle controlled substances in the Commonwealth of Massachusetts. The Drug Enforcement Administration cannot register or maintain the registration of a practitioner who is not duly authorized to handle controlled substances in the state in which he conducts his business. 21 U.S.C. 802(21), 823(f) and 824(a)(3). This prerequisite has been consistently upheld. *See James H. Nickens, M.D.,* 57 FR 59847 (1992); *Elliott Monroe, M.D.,* 57 FR 23246 (1992); *Bobby Watts, M.D.,* 53 FR 11919 (1988).

The Deputy Administrator finds that grounds exist to revoke Dr. Zadrozny's DEA registration under 21 U.S.C. 824(a)(3) and (a)(5). No evidence of explanation or mitigating circumstances was offered by Dr. Zadrozny. Therefore, it is clear that Dr. Zadrozny's DEA Certificate of Registration must be revoked.

Accordingly, the Deputy Administrator of the Drug Enforcement Administration, pursuant to the authority vested in him by 21 U.S.C. 823 and 824 and 28 CFR 0.100(b), hereby orders that DEA Certificate of Registration, AZ1230426, previously issued to Joseph A. Zadrozny, M.D., be, and it hereby is, revoked and that any pending applications for renewal of such registration be, and they hereby are, denied. This order is effective April 17, 1995.

Dated: March 10, 1995.

Stephen H. Greene,

Deputy Administrator.

[FR Doc. 95–6509 Filed 3–15–95; 8:45 am]

BILLING CODE 4410–09–M

Notice of Lodging of Consent Decree Pursuant to the Clean Water Act

In accordance with 28 CFR 50.7, notice is hereby given that on March 8, 1995, a proposed Second Modified Consent Decree in *United States of America* v. *City of New Bedford, Massachusetts,* Civil Action No. 87–2497–T, was lodged with the United States District Court for the District of Massachusetts. The United States' complaint sought relief under the Clean Water Act, 33 U.S.C. 1251, *et seq.* The Second Modified Consent Decree revises the existing Modified Consent Decree entered by the Court in 1990. The Second Modified Consent Decree provides for an extension in the deadline for completion of construction of secondary treatment facilities from May 1, 1995 to August 22, 1996, and

requires the payment of $51,000 in stipulated penalties to the United States. It also provides for a revised sludge disposition approach by the City, under which the City is required to enter into primary long term and backup contracts for disposition of its sludge residuals and to maintain the design and permits for a backup residuals landfill which it is to construct in the event of difficulties with contractual disposition.

The Department of Justice will receive comments relating to the proposed consent decree for a period of thirty (30) days from the date of this publication. Comments should be addressed to the Assistant Attorney General, Environment and Natural Resources Division, Department of Justice, Washington, DC 20530, and should refer to *United States* v. *City of New Bedford, Massachusetts,* D.J. Ref. 90–5–1–1–2823.

The proposed consent decree may be examined at the office of the United States Attorney, 1003 J.W. McCormack P.O. & Courthouse, Boston, Massachusetts 02109, and at the Region I office of the Environmental Protection Agency, One Congress St., Boston, Massachusetts 02203. The proposed consent decree may also be examined at the Consent Decree Library, 1120 G. St., NW., 4th Floor, Washington, DC 20005, 202–624–0892. A copy of the proposed consent decree may be obtained in person or by mail from the Consent Decree Library, 1120 G. St., NW., 4th Floor, Washington, DC 20005. In requesting a copy, please enclose a check in the amount of $16.50 (25 cents per page reproduction cost) payable to the ''Consent Decree Library.''

Joel Gross,

Acting Chief, Environmental Enforcement Section, Environment & Natural Resources Division.

[FR Doc. 95–6498 Filed 3–15–95; 8:45 am]

BILLING CODE 4410–01–M

Notice of Lodging of Consent Decree Pursuant to the Comprehensive Environmental Response, Compensation, and Liability Act

Notice is hereby given that a proposed consent decree in *United States* v. *Missouri Electric Works, Inc. et al.,* Civil Action No. 1:95CV0004 LMB, was lodged on March 9, 1995 with the United States District Court for the Easter District of Missouri, Southeastern Division. Pursuant to the Consent Decree, Defendants Missouri Electric Works, Inc. and David B. Giles, Personal Representative for the Estate of Richard H. Giles, Decedent, will pay to the United States $190,000 and one-half of the net proceeds over $75,000 resulting from the sale of the inventory of Missouri Electric Works Inc. These payments will be used by the United States for unreimbursed response costs relating to the Missouri Electric Works, Inc. Superfund Site in Cape Girardeau, Missouri. The Consent Decree includes a covenant not to sue by the United States under Section 106 and 107 of the CERCLA, and under Section 7003 of the Resource Conservation and Recovery Act (''RCRA''), 42 U.S.C. 6973.

The Department of Justice will receive, for a period of thirty (30) days from the date of this publication, comments relating to the proposed consent decree. Comments should be addressed to the Assistant Attorney General for the Environment and Natural Resources Division, Department of Justice, Washington, D.C. 20530, and should refer to *United States* v. *Missouri Electric Works, Inc., et al.,* DOJ Ref. #90–11–2–614B. Commenters may request an opportunity for a public meeting in the affected area, in accordance with Section 7003(d) of RCRA.

The proposed consent decree may be examined at the office of the United States Attorney, Eastern District of Missouri, Southeastern Division, 325 Broadway, Second Floor, Cape Girardeau, Missouri; the Region VII Office of the Environmental Protection Agency, 726 Minnesota Avenue, Kansas City, Kansas 66101; and at the Consent Decree Library, 1120 G Street, NW., 4th Floor, Washington, DC. 20005, (202) 624–0892. A copy of the proposed consent decree may be obtained in person or by mail from the Consent Decree Library, 1120 G Street, NW., 4th Floor, Washington, DC. 20005. In requesting a copy please refer to the referenced case and enclose a check in the amount of $13.25 (25 cents per page reproduction costs), payable to the Consent Decree Library.

Joel M. Gross,

Acting Chief, Environmental Enforcement Section, Environment and Natural Resources Division.

[FR Doc. 95–6497 Filed 3–15–95; 8:45 am]

BILLING CODE 4410–01–M

NATIONAL SCIENCE FOUNDATION

Special Emphasis Panel in Mathematical Sciences; Notice Of Meeting

In accordance with the Federal Advisory Committee Act (Pub. L. 92–463, as amended), the National Science Foundation announces the following meeting:

Name: Special Emphasis Panel in Mathematical Sciences (1204).

Date and Time: April 3–4, 1995; 8:30 a.m., til 5:00 p.m.

Place: National Science Foundation, 4201 Wilson Boulevard, Rm 1020, Arlington, VA 22230.

Type of Meeting: Closed.

Contact Person: Dr. Joe Jenkins, National Science Foundation, 4201 Wilson Boulevard, Arlington, VA 22230 Telephone: (703) 306–1870.

Purpose of Meeting: To provide advice and recommendations concerning proposals submitted to National Science Foundation for financial support.

Agenda: To review and evaluate proposals for the Classical Analysis Program as part of the selection process for awards.

Reason for Closing: The proposals being reviewed include information of a proprietary or confidential nature, including technical information; financial data, such as salaries; and personal information concerning individuals associated with the proposals. These matters are exempt under 5 U.S.C. 552b(c), (4) and (6) of the government in the Sunshine Act.

Dated: March 13, 1995.

M. Rebecca Winkler,

Committee Management Officer.

[FR Doc. 95–6543 Filed 3–15–95; 8:45 am]

BILLING CODE 75555–01–M

Special Emphasis Panel in Systemic Reform; Notice of Meeting

In accordance with the Federal Advisory Committee Act (Pub. L. 92–463, as amended), the National Science Foundation announces the following meeting:

Name: Special Emphasis Panel in Systemic Reform (#1765).

Dates and Times: April 3–4, 1995 from 8:30 a.m. to 5:00 p.m.

Place: Marriott Hotel, 1221 22nd Street, Washington, DC.

Type of Meeting: Closed.

Contact Person: Dr. Richard J. Anderson, Senior Project Director, Experimental Program to Stimulate Competitive Research, Office of Systemic Reform, Room 875, National Science Foundation, 4201 Wilson Blvd. Arlington, VA 22230, Tel: (703) 306–1683.

Purpose of Meeting: To provide advice and recommendations concerning proposals submitted to the NSF EPSCoR program for financial support.

Agenda: To review and evaluate Experimental Systemic Initiative proposals as part of the selection process for awards.

Reason for Closing: The proposals being reviewed include information of a proprietary or confidential nature, including technical information, financial data, such as salaries; and personal information concerning individuals associated with the proposals. These matters are within exemptions (4) and (6) of 5 U.S.C. 552b(c), the Government in the Sunshine Act.

Dated: March 13, 1995.

M. Rebecca Winkler,

Committee Management Officer.

[FR Doc. 95–6542 Filed 3–15–95; 8:45 am]

BILLING CODE 7555–01–M

Special Emphasis Panel in Undergraduate Education; Notice of Meeting

In accordance with the Federal Advisory Committee Act (Pub. L. 92–463, as amended), the National Science Foundation announces the following meeting:

Name: Special Emphasis Panel in Undergraduate Education.

Date and Time: April 03, 1995, 8:30 a.m. to 5:00 p.m.

Place: National Science Foundation, 4201 Wilson Boulevard, Arlington, VA 22230.

Type of Meeting: Closed.

Contact person: Dr. Jim Lightbourne, Section Head, National Science Foundation, 4201 Wilson Boulevard, Arlington, VA 22230. Telephone: (703) 306–1665.

Purpose of Meeting: To provide advice and recommendations concerning proposals submitted to NSF for financial support.

Agenda: To review and evaluate unsolicited proposals submitted to the Cross-Program Projects Panel Meeting.

Reason for Closing: The proposals being reviewed include information of a proprietary or confidential nature, including technical information; financial data, such as salaries; and personal information concerning individuals associated with the proposals. These matters are exempt under 5 U.S.C. 552b. (c)(4) and (6) of the Government in the Sunshine Act.

Dated: March 13, 1995.

M. Rebecca Winkler,

Committee Management Officer.

[FR Doc. 95–6541 Filed 3–15–95; 8:45 am]

BILLING CODE 7555–01–M

Special Emphasis Panel in Information, Robotics and Intelligent Systems; Notice of Meeting

In accordance with the Federal Advisory Committee Act (Pub. L. 92–463, as amended), the National Science Foundation announces the following meeting:

Name: Special Emphasis Panel in Information, Robotics and Intelligent System (1200).

Date and Time: April 3–4, 1995, 8:30 a.m. to 5:00 p.m.

Place: Holiday Inn-Arlington Hotel, 4610 N. Fairfax Drive, Arlington, VA 22202.

Type of Meeting: Closed.

Contact Person: Dr. Howard Moraff, Acting Deputy Division Director, Robotics and Intelligence, Room 1115, National Science Foundation, 4201 Wilson Blvd., Arlington, VA 22230. Telephone: (703) 306–1928.

Purpose of Meeting: To provide advice and recommendations concerning proposals submitted to NSF for financial support.

Agenda: To review and evaluate Robotics and Machine Intelligence proposals as part of the selection process for awards.

Reason for Closing: The proposals being reviewed include information of a proprietary or confidential nature, including technical information; financial data, such as salaries; and personal information concerning individuals associated with the proposals. These matters are exempt under 5 U.S.C. 552b(c), (4) and (6) of the Government in the Sunshine Act.

Dated: March 13, 1995.

M. Rebecca Winkler,

Committee Management Officer.

[FR Doc. 95–6540 Filed 3–15–95; 8:45 am]

BILLING CODE 7555–01–M

Advisory Committee for Polar Programs; Notice of Meeting

In accordance with the Federal Advisory Committee Act (Pub. L. 92–463, as amended), the National Science Foundation announces the following meeting:

Name: Advisory Committee for Polar Programs (#1130).

Date and Time: April 4–5, 1995; 8:30 a.m.–5:00 p.m.

Place: National Science Foundation, Room 310 & 310.2, 4201 Wilson Blvd., Arlington, VA 22230.

Type of Meeting: Closed.

Contact Person: Mr. Erick Chiang, Manager, Polar Operations, OD/OPP, National Science Foundation, 4201 Wilson Blvd., Arlington, VA 22230. Phone: (703) 306–1032.

Purpose of Meeting: To carry out Committee of Visitors (COV) review including examination of decisions on proposals, reviewer comments, and other privileged materials.

Agenda: To provide oversight review of the OPP, Polar Operations Section.

Reason for Closing: This meeting is closed to the public because the Committee is reviewing proposal and contract actions that will include privileged intellectual property and personal information that could harm individuals if they were disclosed. If discussion were open to the public, these matters that are exempt under 5 U.S.C. 552b(c), (4) and (6) of the Government in the Sunshine Act would be improperly disclosed.

Dated: March 13, 1995.

M. Rebecca Winkler,

Committee Management Officer.

[FR Doc. 95–6539 Filed 3–15–95; 8:45 am]

BILLING CODE 7555–01–M

Federal Networking Council Advisory Committee

In accordance with the Federal Advisory Committee Act (Public Law 92–463, as amended), the National Science Foundation announces the following meeting:

Name: Federal Networking Council Advisory Committee (#1177).

Date and Time: April 4, 1995, 9:00 a.m. to 5:00 p.m. and April 5, 1995; 9:00 am. to 1:00 p.m.

Place: Room 375, National Science Foundation, 4201 Wilson Blvd., Arlington, VA 22230.

Type of Meeting: Open.

Contact Person: Mr. Scott Behnke, Coordinator, Federal Networking Council, DynCorpATS, 4001 N. Fairfax Drive, Suite 200, Arlington, VA 22203–1614, Telephone: (703) 522–6410, Fax: (703) 522–7161. Internet: sbehnke@csto.snap.org.

Purpose of Meeting: The purpose of this meeting is for the Advisory Committee to provide the Federal Networking Council (FNC) with technical, tactical, and strategic advice, concerning policies and issues raised in the implementation and deployment of the National Research and Education Network (NREN) Program.

Agenda: FNC/IITF Relationship, Federal Internet Umbrella Security Plan, International Networking, Education.

Luncheon: There is no fee to attend this meeting. However, attendees who register in advance may order refreshments and/or a box lunch for which there will be a charge. To obtain registration form, contact Mr. Behnke by telephone, fax, or electronic mail at the numbers above. Forms are requested by March 29, 1995.

Dated: March 13, 1995.

M. Rebecca Winkler,

Committee Management Officer.

[FR Doc. 95–6538 Filed 3–15–95; 8:45 am]

BILLING CODE 7555–01–M

Special Emphasis Panel in Advanced Scientific Computing; Notice of Meeting

In accordance with the Federal Advisory Committee Act (Pub. L. 92–463, as amended), the National Science Foundation announces the following meeting:

Name and Committee Code: Special Emphasis Panel in Advanced Scientific Computing (#1185).

Date and Time: April 5–6, 1995, 8:30 a.m. to 5:00 p.m.

Place: Room 1150, National Science Foundation, 4201 Wilson Boulevard, Arlington, VA 22230.

Type of Meeting: Closed.

Contact Person: Dr. John Van Rosendale, Program Director, New Technologies Program, Suite 1122, National Science Foundation, 4201 Wilson Boulevard, Arlington, VA 22230. Telephone: (703) 306–1962.

Purpose of Meeting: To carry out Committee of Visitors (COV) review, including examination of decisions on proposals, reviewer comments, and other privileged materials.

Agenda: To provide oversight review of the New Technologies Program

Reason for Closing: The meeting is closed to the public because the Committee is reviewing proposal actions that will include privileged intellectual property and personal information that could harm individuals if they are disclosed. If discussions were open to the public, these matters that are exempt under 5 U.S.C. 552b(c) (4) and (6) of the Government in the Sunshine Act would be improperly disclosed.

Dated: March 13, 1995.

M. Rebecca Winkler,

Committee Management Officer.

[FR Doc. 95–6537 Filed 3–15–95; 8:45 a.m.]

BILLING CODE 7555–01–M

Advisory Panel for Biochemistry & Molecular Structure and Function; Notice of Meeting

In accordance with the Federal Advisory Committee Act (Pub. L. 92–463, as amended), the National Science Foundation announces the following meeting:

Name and Committee Code: Advisory Panel for Biochemistry & Molecular Structure and Function (#1134).

Date and Time: Thursday and Friday April 6–7, 1995, 8:30 a.m. to 5:00 p.m.

Place: Room 370, National Science Foundation, 4201 Wilson Boulevard, Arlington, VA

Type of Meeting: Closed.

Contact Person: Dr. Robert L. Uffen, Program Director and Brenda Flam, Program Manager for Metabolic Biochemistry, Division of Molecular and Cellular Biosciences, Room 655, National Science Foundation, 4201 Wilson Boulevard, Arlington, VA 22230. Telephone (703) 306–1443.

Purpose of meeting: To provide advice and recommendations concerning research proposals submitted to the Metabolic Program of the Division of Molecular and Cellular Biosciences at NSF for financial support.

Agenda: To review and evaluate research proposals submitted to the Metabolic Biochemistry Program as part of the selection process for awards.

Reason for closing: The proposals being reviewed include information of a proprietary or confidential nature, including technical information; financial data, such as salaries and personal information concerning individuals associated with the proposals. These matters are exempt under 5 U.S.C. 552b(c) (4) and (6) of the Government in the Sunshine Act.

Dated: March 13, 1995.

M. Rebecca Winkler,

Committee Management Officer.

[Fr Doc. 95–6536 Filed 3–15–95; 8:45 am]

BILLING CODE 7555–01–M

Advisory Committee for Polar Programs; Notice of Meeting

In accordance with the Federal Advisory Committee Act (Pub. L. 92–463, as amended), the National Science Foundation announces the following meeting:

Name: Advisory Committee for Polar Programs (#1130).

Date and time: April 6, 1995 8:30 a.m.–5:30 p.m./April 7, 1995 8:30 a.m.–3:00 p.m.

Place: National Science Foundation, Room 375, 4201 Wilson Blvd., Arlington, VA 22230.

Type of meeting: Open.

Contact person: Dr. Dennis Peacock or Dr. Jane Dionne, National Science Foundation, Room 775, 4201 Wilson Blvd., Arlington, VA 22230.

Telephone: (703) 306–1033.

Minutes: May be obtained from the contact person listed above.

Purpose of meeting: Serves to provide expert advice to the U.S. Antarctic Programs and the Arctic Program, including advice on science programs, polar operations support, budgetary planning and polar coordination and information.

Agenda: The OPP Advisory Committee will meet to discuss the following agenda topics—Arctic logistics, organization, Polar Duke update, polar education programs, User Committee update and the Committee on Visitors report.

Dated: March 13, 1995.

M. Rebecca Winkler,

Committee Management Officer.

[FR Doc. 95–6535 Filed 3–15–95; 8:45 am]

BILLING CODE 7555–01–M

Special Emphasis Panel in Systemic Reform; Notice of Meeting

In accordance with the Federal Advisory Committee Act (Pub. L. 92–463, as amended), the National Science Foundation announces the following meeting:

Name: Special Emphasis Panel in Systemic Reform (#1765).

Date and time: April 6–7, 1995 from 8:30 a.m. to 5:00 p.m.

Place: Marriott Hotel, 1221 22nd Street, Washington, DC.

Type of meeting: Closed.

Contact person: Dr. Richard J. Anderson, Senior Project Director, Experimental Program to Stimulate Research, Office of Systemic Reform, Room 875, National Science Foundation, 4201 Wilson Blvd. Arlington, VA 22230, Tel: (703) 306–1683.

Purpose of meeting: To provide advice and recommendations concerning proposals submitted to the NSF EPSCoR program for financial support.

Agenda: To review and evaluate Systemic Improvement proposals as part of the selection process for awards.

Reason for closing: The proposals being reviewed include information of a proprietary or confidential nature, including technical information, financial data, such as salaries; and personal information concerning individuals associated with the proposals. These matters are within exemptions (4) and (6) of 5 U.S.C. 552b(c), the Government in the Sunshine Act.

Dated: March 13, 1995.

[FR Doc. 95–6534 Filed 3–15–95; 8:45 am]

BILLING CODE 7555–01–M

Advisory Panel for Physiology and Behavior; Notice of Meeting

In accordance with the Federal Advisory Committee Act (Pub. L. 92–463, as amended), the National Science Foundation (NSF) announces the following meeting:

Name: Advisory Panel for Physiology and Behavior (Ecological & Evolutionary Physiology).

Date and time: April 5–7, 1995; 8:30 a.m.–5:00 p.m.

Place: National Science Foundation, Room 320, 4201 Wilson Blvd., Arlington, VA

Type of meeting: Part-Open.

Contact person: Dr. David Vleck, Program Director, Ecological & Evolutionary Physiology, Division of Integrative Biology and Neuroscience, Suite 685, National Science Foundation, 4201 Wilson Boulevard, Arlington, VA 22230, Telephone: (703) 306–1421.

Purpose of meeting: To provide advice and recommendations concerning proposals submitted to NSF for financial support.

Minutes: May be obtained from the contact person listed above.

Agenda: Open Session: April 7, 1995; 10:00 a.m. to 11:00 a.m.—for a discussion, Integrative Biology and Neuroscience on research trends and opportunities assessment procedures in Ecological and Evolutionary Physiology.

Closed Session: April 5th and 6th, 8:30 a.m.–5:00 p.m.; April 7th, 8:30 a.m. to 10:00 a.m.; 11:00 a.m. to 5:00 p.m. To review and evaluate Ecological & Evolutionary Physiology proposals as part of the selection process for awards.

Reason for closing: The proposals being reviewed include information of a proprietary or confidential nature, including technical information; financial data, such as salaries; and personal information concerning individuals associated with the proposals. These matters are exempt under 5 U.S.C. 552b(c), (4) and (6) of the Government in the Sunshine Act.

Dated: March 13, 1995.

M. Rebecca Winkler,

Committee Management Officer.

[FR Doc. 95–6533 Filed 3–15–95; 8:45 am]

BILLING CODE 7555–01–M

Division of Environmental Biology; Meetings

In accordance with the Federal Advisory Committee Act (Pub. L. 92–463, as amended), the National Science

Foundation (NSF) announces the following meetings:

Name: Advisory Panel for Ecological Studies (#1751).

Date and time: April 5, 1995, 3 pm–5 pm; April 6, & April 7, 1995, 8:30 am–5 pm each day.

Place: Room 380, National Science Foundation, 4201 Wilson Boulevard, Arlington, VA 22230.

Contact person: Dr. Clifford Dahm, Program Director, Ecological Studies Cluster, Division of Environmental Biology, Room 635, National Science Foundation, 4201 Wilson Boulevard, Arlington, VA 22230. Telephone: (703) 306–1479.

Minutes: May be obtained from the contact person listed above.

Agenda: To review and evaluate Ecosystem Studies proposals as part of the selection process for awards.

Name: Advisory Panel for Ecological Studies (#1751).

Date and time: April 5, 1995, 3 pm–5 pm; April 6 and April 7, 1995, 8:30 am–5 pm each day.

Place: Room 390, National Science Foundation, 4201 Wilson Boulevard, Arlington, VA 22230.

Contact person: Dr. Scott L. Collins, Program Director, Ecological Studies Cluster, Division of Environmental Biology, Room 635, National Science Foundation, 4201 Wilson Boulevard, Arlington, VA 22230. Telephone: (703) 306–1479.

Minutes: May be obtained from the contact person listed above.

Agenda: To review and evaluate Ecology proposals as part of the selection process for awards.

Name: Advisory Panel for Systematic and Population Biology (#1753).

Date and time: April 19–21, 1995, 8 am–5 pm each day.

Place: Room 375(1) and 375(3), National Science Foundation, 4201 Wilson Boulevard, Arlington, VA 22230.

Contact person: Dr. James E. Rodman, Program Director, Systematic and Population Biology Cluster, Division of Environmental Biology, Room 635, National Science Foundation, 4201 Wilson Boulevard, Arlington, VA 22230. Telephone: (703) 306–1481.

Minutes: May be obtained from the contact person above.

Agenda: To review and evaluate Systematic Biology proposals as part of the selection process for awards.

Name: Advisory Panel For Systematic and Population Biology (#1753).

Date and time: April 12–14, 1995, 8 am–5:30 pm each day.

Place: Rooms 330 & 340, National Science Foundation, 4201 Wilson Boulevard, Arlington, VA 22203.

Contact person: Dr. Mark Courtney, Program Director, Systematic and Population Biology Cluster, Division of Environmental Biology, Room 635, National Science Foundation, 4201 Wilson Boulevard, Arlington, VA 22203. Telephone: (703) 306–1481.

Minutes: May be obtained from the contact person listed above.

Agenda: To review and evaluate Population Biology proposals as part of the selection process for awards.

Name: Advisory Panel for Systematic and Population Biology (#1753).

Date and time: April 20, 1995, 8 am–5 pm.

Place: 375(1), National Science Foundation, 4201 Wilson Boulevard, Arlington, VA 22203.

Contact person: Dr. James Rodman, Program Director, Systematic and Population Biology Cluster, Division of Environmental Biology, Room 635, National Science Foundation, 4201 Wilson Boulevard, Arlington, VA 22203. Telephone: (703) 306–1481.

Minutes: May be obtained from the contact person listed above.

Agenda: To review and evaluate Partnerships for Enhancing Expertise in Taxonomy (PEET) proposals as part of the selection process for awards.

Type of meeting: Closed.

Purpose of meeting: To provide advice and recommendations concerning support for research proposals submitted to the NSF for financial support.

Reason for closing: The proposals being reviewed include information of a proprietary or confidential nature, including technical information: financial data, such as salaries; and personal information concerning individuals associated with the proposals. These matters are exempt under 5 U.S.C. 552b (c)(4) and (6) of the Government in the Sunshine Act.

Dated: March 13, 1995.

M. Rebecca Winkler,

Committee Management Officer.

[FR Doc. 95–6544 Filed 3–15–95; 8:45 am]

BILLING CODE 7555–01–M

NUCLEAR REGULATORY COMMISSION

[Docket No. 50–247]

Consolidated Edison Company of New York (Indian Point Nuclear Generating Unit No. 2); Exemption

I

Consolidated Edison Company of New York, Inc. (Con Edison or the licensee) is the holder of Facility Operating License No. DPR–26, which authorizes operation of Indian Point Nuclear Generating Unit No. 2 (the facility or IP2), at a steady-state reactor power level not in excess of 3071.4 megawatts thermal. The facility is a pressurized water reactor located at the licensee's site in Westchester County, New York. The license provides among other things, that it is subject to all rules, regulations, and Orders of the U.S. Nuclear Regulatory Commission (the Commission or NRC) now or hereafter in effect.

II

Section III.D.1.(a) of Appendix J to 10 CFR Part 50 requires the performance of three Type A containment integrated leakage rate tests (ILRTs), at approximately equal intervals during each 10-year service period of the primary containment. The third test of each set shall be conducted when the plant is shutdown for the 10-year inservice inspection of the primary containment.

III

By letters dated September 19, 1994, January 13, 1995, and February 3, 1995, Con Edison requested temporary relief from the requirement to perform a set of three Type A tests at approximately equal intervals during each 10-year service period of the primary containment. The requested exemption would permit a one-time interval extension of the third Type A test by approximately 24 months (from the 1995 refueling outage, currently scheduled to begin in February 1995, to the 1997 refueling outage) and would permit the third Type A test of the second 10-year inservice inspection period to not correspond with the end of the current American Society of Mechanical Engineers Boiler and Pressure Vessel Code (ASME Code) inservice inspection interval.

The licensee's request cites the special circumstances of 10 CFR 50.12, paragraph (a)(2)(ii), as the basis for the exemption. They point out that the existing Type B and C testing programs are not being modified by this request and will continue to effectively detect containment leakage caused by the degradation of active containment isolation components as well as containment penetrations. It has been the consistent and uniform experience at IP2 during the five Type A tests conducted from 1976 to date, that any significant containment leakage paths are detected by the Type B and C testing. The Type A test results have only been confirmatory of the results of the Type B and C test results. Additionally, the Indian Point 2 Containment Penetration and Weld Channel Pressurization System provides a means for continuously pressurizing the positive pressure zones incorporated into the containment penetrations, the channels over the welds in the steel inner liner and certain containment isolation valves. This system provides continuous monitoring of these potential containment leakage paths, thus providing further assistance during power operation that a leak path does not exist and further obviates the need

for Type A testing at this time. Therefore, application of the regulation in this particular circumstance would not serve, nor is it necessary to achieve, the underlying purpose of the rule.

IV

Section III.D.1.(a) of Appendix J to 10 CFR Part 50 states that a set of three Type A leakage rate tests shall be performed at approximately equal intervals during each 10-year service period.

The licensee proposes an exemption to this section which would provide a one-time interval extension for the Type A test by approximately 24 months. The Commission has determined, for the reasons discussed below, that pursuant to 10 CFR 50.12(a)(1) this exemption is authorized by law, will not present an undue risk to the public health and safety, and is consistent with the common defense and security. The Commission further determines that special circumstances, as provided in 10 CFR 50.12(a)(2)(ii), are present justifying the exemption; namely, that application of the regulation of the particular circumstances is not necessary to achieve the underlying purpose of the rule.

The underlying purpose of the requirement to perform Type A containment leak rate tests at intervals during the 10-year service period, is to ensure that any potential leakage pathways through the containment boundary are identified within a time span that prevents significant degradation from continuing or becoming unknown. The NRC staff has reviewed the basis and supporting information provided by the licensee in the exemption request. The NRC staff has noted that the licensee has a good record of ensuring a leaktight containment. All Type A tests have passed with significant margin and the licensee has noted that the results of the Type A testing have been confirmatory of the Type B and C tests which will continue to be performed. The licensee has stated to the NRC Project Manager that they will perform the general containment inspection although it is only required by Appendix J (Section V.A.) to be performed in conjunction with Type A tests. The NRC staff considers that these inspections, though limited in scope, provide an important added level of confidence in the continued integrity of the containment boundary. The NRC staff also notes that the unique IP2 Containment Penetration and Weld Channel Pressurization System provides a means for continuously monitored potential containment leakage paths.

The NRC staff has also made use of the information in a draft staff report, NUREG–1493, which provides the technical justification for the present Appendix J rulemaking effort which also includes a 10-year test interval for Type A tests. The integrated leakage rate test, or Type A test, measures overall containment leakage. However, operating experience with all types of containments used in this country demonstrates that essentially all containment leakage can be detected by local leakage rate tests (Type B and C). According to results given in NUREG–1493, out of 180 ILRT reports covering 110 individual reactors and approximately 770 years of operating history, only 5 ILRT failures were found which local leakage rate testing could not detect. this is 3% of all failures. This study agrees well with previous NRC staff studies which show that Type B and C testing can detect a very large percentage of containment leaks. The IP2 experience has also been consistent with these results.

The Nuclear Management and Resources Council (NUMARC), now the Nuclear Energy Institute (NEI), collected and provided the NRC staff with summaries of data to assist in the Appendix J rulemaking effort. NUMARC collected results of 144 ILRTs from 33 units; 23 ILRTs exceeded $1.0L_a$. Of these, only nine were not due to Type B or C leakage penalties. The NEI data also added another perspective. The NEI data show that in about one-third of the cases exceeding allowable leakage, the as-found leakage was less than $2L_a$; in one case the leakage was found to be approximately $2L_a$; in one case the as-found leakage was less than $3L_a$; one case approached $10L_a$; and in one case the leakage was found to be approximately $21L_a$. For about half of the failed ILRTs the as-found leakage was not quantified. These data show that, for those ILRTs for which the leakage was quantified, the leakage values are small in comparison to the leakage value at which the risk to the public starts to increase over the value of risk corresponding to L_a (approximately $200L_a$, as discussed in NUREG–1493). Therefore, based on these considerations, it is unlikely that an extension of one cycle for the performance of the Appendix J, Type A test at IP2 would result in significant degradation of the overall containment integrity. As a result, the application of the regulation in these particular circumstances is not necessary to achieve the underlying purpose of the rule.

Based on generic and plant specific data, the NRC staff finds the basis for the licensee's proposed exemption to allow a one-time exemption to permit a schedular extension of one cycle for the performance of the Appendix J, Type A test, provided that the general containment inspection is performed, to be acceptable.

Pursuant to 10 CFR 51.32, the Commission has determined that granting this Exemption will not have a significant impact on the environment (60 FR 12787).

This Exemption is effective upon issuance and shall expire at the completion of the 1997 refueling outage.

Dated at Rockville, Maryland, this 8th day of March 1995.

For the Nuclear Regulatory Commission.

Steven A. Varga,

Director, Division of Reactor Projects—I/II, Office of Nuclear Reactor Regulation.

[FR Doc. 95–6483 Filed 3–15–95; 8:45 am]

BILLING CODE 7590–01–M

RAILROAD RETIREMENT BOARD

Agency Forms Submitted for OMB Review

SUMMARY: In accordance with the Paperwork Reduction Act of 1980 (44 U.S.C. Chapter 35), the Railroad Retirement Board has submitted the following proposal(s) for the collection of information to the Office of Management and Budget for review and approval.

SUMMARY OF PROPOSAL(S):

(1) *Collection title:* Withholding Certificate for Railroad Retirement Monthly Annuity Payments
(2) *Form(s) submitted:* RRB W–4P
(3) *OMB Number:* 3220–0149
(4) *Expiration date of current OMB clearance:* April 30, 1995
(5) *Type of request:* Revision of a currently approved collection
(6) *Respondents:* Individuals or households
(7) *Estimated annual number of respondents:* 31,000
(8) *Total annual responses:* 31,000
(9) *Total annual reporting hours:* 1
(10) *Collection description:* Under Public Law 98–76 railroad retirement beneficiaries' Tier 2, dual vested and supplemental benefits are subject to income tax under private pension rules. Under Public Law 99–514, the non-social security equivalent benefit portion of Tier 1 is also taxable under private pension rules. The collection obtains the information needed by the Railroad Retirement Board to implement the income tax withholding provisions.

ADDITIONAL INFORMATION OR COMMENTS: Copies of the form and supporting documents can be obtained from Chuck Mierzwa, the agency clearance officer (312–751–3363). Comments regarding the information collection should be addressed to Ronald J. Hodapp, Railroad Retirement Board, 844 North Rush Street, Chicago, Illinois 60611–2092 and the OMB reviewer, Laura Oliven (202–395–7316), Office of Management and Budget, Room 10230, New Executive Office Building, Washington, D.C. 20503.

Chuck Mierzwa,

Clearance Officer.

[FR Doc. 95–6492 Filed 3–15–95; 8:45 am]

BILLING CODE 7905–01–M

SECURITIES AND EXCHANGE COMMISSION

[Release No. 34–35471; File No. SR–NASD–95–9]

Self-Regulatory Organizations; Notice of Proposed Rule Change by National Association of Securities Dealers, Inc., Relating to the Trading of Exchange-Listed Securities in the Over-the-Counter Market

March 10, 1995.

Pursuant to Section 19(b)(1) of the Securities Exchange Act of 1934 (''Act''), 15 U.S.C. 78s(b)(1), notice is hereby given that on March 6, 1995, the National Association of Securities Dealers, Inc. (''NASD'' or ''Association'') filed with the Securities and Exchange Commission (''Commission'' or ''SEC'') the proposed rule change as described in Items I, II, and III below, which Items have been prepared by the NASD.[1] The Commission is publishing this notice to solicit comments on the proposed rule change from interested persons.

I. Self-Regulatory Organization's Statement of the Terms of Substance of the Proposed Rule Change

The NASD is proposing to make three significant changes to rules governing NASD members' over-the-counter (''OTC'') trading in exchange-listed securities. First, the NASD proposes to require NASD members registered as Consolidated Quotations Service (''CQS'') market makers to display certain customer limit orders in their quotes. Second, the NASD proposes to prohibit NASD members who are not Intermarket Trading System/Computer Assisted Execution System Automated Interface (''ITS/CAES'') market makers from effecting a transaction in any ITS/CAES-eligible security that ''trades-through'' (*i.e.*, a purchase below the lowest bid or a sell above the highest offer) the best bid or offer displayed by any ITS/CAES market maker or any ITS Participant Exchange in that stock. Third, the NASD proposes to require all NASD members executing customer orders in ITS-eligible securities to afford such orders some opportunity for price improvement.

The full text of the proposed rule change is set forth below. (New language is italicized.)

Schedule D

PART VI

CONSOLIDATED QUOTATIONS SERVICE

(CQS)

Sec. 2. Obligations of CQS Market Makers

(a) No Change

(b) No Change

(c) A CQS market maker shall be required to process customer limit orders in securities eligible for inclusion on the ITS/CAES linkage in the following manner:

(i) if the limit order is for 500 shares or less, the CQS market maker either must execute the limit order immediately or display it in its quotation with a minimum size of 500 shares (unless the specified minimum for that security is less than 500 shares); or

(ii) if the limit order is for greater than 500 shares, the order's price must be reflected in the market maker's quotation, provided however, that if the size displayed with that updated quotation price is less than the limit order's size, the balance of the limit order must be executed at a price at least as favorable as the displayed price.

* * * * *

Schedule G

* * * * *

Sec. 1. Definitions

* * * * *

(g) The terms ''Participant Market,'' ''ITS System,'' ''ITS/CAES Market Maker,'' and ''ITS Security'' shall have the same meanings as set forth in section (a) of The Rules of Practice and Procedure for Intermarket Trading System/Computer Assisted Execution System Automated Interface.

* * * * *

Sec. 4. Trading Practices

* * * * *

(j) No member shall effect a trade in a security eligible for inclusion in the ITS/CAES Linkage, whether as principal or agent, at a price that is lower than the best bid or higher than the best offer currently displayed by an ITS/CAES Market maker or another Participant market (hereinafter referred to as a ''trade-through'') between 9:30 a.m. and 4:00 p.m. Eastern Standard Time (or such shorter period of time coinciding with the time that the primary market for a particular ITS/CAES security is open) unless one of the following conditions exists: (1) the size of the bid or offer that is traded through is for 100 shares; (2) the transaction that constitutes the trade-through is not a ''regular way'' contract; (3) the bid or offer that is traded-through is being displayed from a Participant Market whose members are relieved of their obligations under paragraph (c)(2) of Securities Exchange Act Rule 11Ac1–1 with respect to such bid of offer; or (4) the bid or offer that is traded-through has caused a locked or crossed market in the affected ITS Security. The foregoing requirements shall not apply to trade-throughs effected by ITS/CAES Market Makers and governed by Sections (h)(1)(A)–(H) of the ITS/CAES Rules.

(k) Between 9:30 a.m. and 4:00 p.m. Eastern Standard Time (or such shorter period of time coinciding with the time that the primary market for a particular ITS-eligible security is open), no member shall accept customer orders in securities eligible for inclusion in the ITS System for execution in the over-the-counter market, either as agent or principal, unless the member affords such orders some opportunity for price improvement over the best bid (in the case of a retail sell order) or best offer (in the case of a retail buy order) prevailing among the Participant Markets in the ITS System. A member can satisfy this requirement either by a manual procedure or an algorithm built into its internal order processing system. The specific parameters for granting price improvement at a member firm will be determined by competitive forces and the business judgment of the firm's management.

II. Self-Regulatory Organization's Statement of the Purpose of, and Statutory Basis for, the Proposed Rule Change

In its filing with the Commission, the NASD included statements concerning the purpose of and basis for the proposed rule change and discussed any comments it received on the proposed rule change. The text of these statements may be examined at the places specified in Item IV below. The NASD has prepared summaries, set forth in Sections (A), (B), and (C) below, of the most significant aspects of such statements.

A. Self-Regulatory Organization's Statement of the Purpose of, and Statutory Basis for, the Proposed Rule Change

This proposal is intended to respond to specific recommendations contained in the SEC's *Market 2000 Report* for improving the efficiency and effectiveness of the OTC dealer markets in exchange-listed securities, including ITS/CAES eligible securities.[2] The

[1] The NASD originally submitted the proposed rule change on February 21, 1995. As a result of discussions on March 6, 1995, between the Commission staff and the NASD certain minor amendments to the filing were agreed upon. This notice reflects those amendments.

[2] Operation of ITS/CAES is governed by a national market system plan known as the ''Plan for the Purpose of Creating and Operating an Intermarket Communications Linkage pursuant to

instant proposal would effect the following changes in selected NASD rules governing members' OTC trading in exchange-listed securities.

1. Display of Customer Limit Orders

Part VI of Schedule D to the NASD By-Laws establishes various regulations applicable to member firms that utilize the CQS to support their OTC market making in exchange-listed securities. Under the proposal, new Section 2(c) would specify the circumstances in which a CQS market maker in an ITS/CAES eligible security would be required to reflect customer limit orders in the firm's displayed CQS quotation. First, for customer limit orders of 500 shares or less, a CQS market maker would be required either to provide an immediate execution at the limit price or update its CQS quotation to reflect the customer's by/sell interest at the limit price. The size associated with that quotation must be 500 shares unless the NASD has designated a lower minimum size for CQS quotations in that particular security.[3] (This would be true even if, for example, the pending limit order were only for 200 shares.) Second, if a customer's limit order exceeds 500 shares, the market maker must update its CQS quotation to reflect the superior price of the customer limit order. If the market maker elects not to reflect the entire size of the pending limit order in the firm's updated quotation, the balance of the limit order must be executed at a price at least as favorable as the displayed price. In sum, this modification would result in the exposure of customer limit orders in ITS/CAES eligible securities to other CQS market makers as well as exchange specialists who would have the ability to interact with such orders through the ITS/CAES Linkage[4] or CAES.[5]

2. Trade-Through Prohibition

The proposal also contains two substantive changes to NASD trading practice regulations applicable to members effecting OTC trades in ITS/CAES securities. The first addresses the possibility of a member firm effecting an OTC trade in a ITS/CAES eligible security at a price inferior to a displayed market for that security in the ITS system. Currently, NASD regulations in this area only cover members that have registered as ITS/CAES market makers pursuant to the NASD Rules of Practice and Procedure for the Intermarket Trading System/Computer Assisted Execution System Automated Interface (''ITS/CAES Rules''). The proposed prohibition would apply to all member firms that effect trades in ITS/CAES eligible securities without being registered as ITS/CAES market makers in those securities, e.g., block positioning firms and order-entry firms. It would also apply to the remote circumstance where a registered ITS/CAES market maker effects a trade-through in an ITS/CAES eligible security in which the firm does not maintain a market making position.

The NASD expects that instances of trade-throughs by its members should diminish with the recent implementation of an NASD requirement that all CQS market makers in ITS/CAES eligible securities become registered as ITS/CAES market makers pursuant to the ITS/CAES Rules.[6] Nevertheless, it is still possible for an NASD member who is not a registered ITS/CAES market maker to effect a trade in an ITS/CAES eligible security at a price that constitutes a trade-through under the ITS/CAES Rules.[7] Accordingly, the proposed rule would prohibit such conduct, unless the circumstances satisfied one of the four exceptions contained in the proposal: (1) the size of the market traded-through was 100 shares; (2) the transaction itself is not for regular-way settlement (e.g., a ''cash'' transaction settling the same day); (3) the bid/offer traded-through emanated from a market whose members are relieved of their obligations under the SEC's Firm Quote Rule;[8] or (4) the bid/offer traded through had caused a locked/crossed market condition in the affected security. (These four exceptions also exist under the ITS/CAES Rules applicable to ITS/CAES market makers.) In addition, the proposed trade-through rule would apply only between 9:30 a.m. and 4:00 p.m. Eastern Standard Time (''E.S.T.''), or such short period of time coinciding with time that the primary market for a particular ITS/CAES security is open.

Essentially, the proposed trade-through prohibition impacts only those NASD members that conduct business in Rule 19c–3 securities without being registered as ITS/CAES market makers in those issues. As such, these firms cannot avail themselves of the procedural mechanisms prescribed by the ITS/CAES rules for resolving inter-market complaints of trade-throughs by providing stock to another ITS participant. For this reason, the NASD will regard a violation of the proposed prohibition as a course of conduct warranting referral to the NASD's Market Surveillance Committee for possible disciplinary action. The NASD will not, however, compel the offending member to provide satisfaction to any ITS participant that was traded-through, even if the latter promptly complains and requests satisfaction. This result is appropriate because the NASD does not wish to compel members who periodically trade ITS/CAES eligible securities (whether as agent or principal) to assume the obligations of an ITS/CAES market makers as a condition of continuing to trade such securities. On the other hand, the trade-through prohibition is designed to ensure that non-ITS/CAES market makers will not ignore the superior bids or offers in Rule 19c–3 securities that may be displayed by ITS/CAES market makers or exchange participants in the ITS System.

3. Price Improvement

The second substantive change involving Section 4 of Schedule G relates to price improvement respecting retail orders executed OTC in securities eligible for inclusion in the ITS System.[9] This initiative also responds to a recommendation contained in the SEC's *Market 2000 Report.* Basically, new Section 4(k) in Schedule G would require that members executing market orders from retail customers in ITS-eligible securities (either as principal or agent) afford such orders some opportunity for price improvement, *i.e.*,

Section 11A(a)(3)(B) of the Securities Exchange Act of 1934 (''Act'')'' (hereinafter referred to as the ''ITS Plan''). Under the ITS Plan, NASD members participating as ITS/CAES market makers must confine their market making to ''Rule 19c–3 securities.'' This grouping consists of securities that were (1) not traded on a national securities exchange prior to April 26, 1979 or (2) traded on such an exchange on April 26, 1979, but thereafter ceased to be traded on an exchange for some period of time.

[3] At the present time, the NASD has not designated any CQS security as subject to a minimum quotation size of 200 shares.

[4] As discussed *infra* at note 6 and accompanying text, all CQS market makers in ITS/CAES-eligible securities must now be registered as ITS/CAES Market Makers.

[5] CAES is an automated system regulated by the NASD and operated by The Nasdaq Stock Market, Inc. that allows NASD members to direct agency orders (and principal orders with this rule change) in exchange-listed securities to CAES for automated execution in the third market. CAES market makers are CQS market makers who have registered as CAES market makers.

[6] See Securities Exchange Act Release No. 34280 (June 29, 1994); 59 FR 34880 (July 7, 1994). This requirement took effect on October 31, 1994.

[7] In order to comply with the trade-through prohibition, a member firm would need to access a CQS display on its Nasdaq Workstation device or subscribe to a vendor service offering equivalent display capabilities. From a surveillance perspective, the NASD would develop an exception report capable of identifying trade-throughs that constituted violations of the proposed rule.

[8] See Securities Exchange Act Rule 11Ac1–1.

[9] Accordingly, this price improvement requirement would cover all non Rule 19c–3 securities as well as all Rule 19c–3 securities.

an execution at a price superior to the best bid or offer currently reflected in the ITS System. It is the NASD's understanding that most firms trading exchange-listed securities in the OTC market already provide some form of price improvement opportunity, depending on factors such as order size and the trading characteristics of the particular security, and that there is no uniform way to achieve price improvement. This is to be expected as affording customers price improvement opportunities is driven by competitive considerations to attract and retain order flow from order entry firms. Thus, in light of the varied means by which firms offer price improvement and the competitive nature of price improvement, the NASD has concluded that it would be too limiting and restrictive for the NASD to mandate and articulate specific parameters for granting price improvement to individual orders in ITS-eligible securities. Rather, the NASD believes that it is sufficient to adopt a more generalized provision specifying that members must afford some opportunity for price improvement in executing customer orders in exchange-listed securities. Accordingly, under the proposal, price improvement, at a minimum, would have to involve either exposing customer orders to an algorithm incorporated into the firms' in-house execution system or manually reviewing incoming orders prior to their execution. The NASD believes that this flexible approach to mandating price improvement is appropriate and that firms should be encouraged to experiment with the specific parameters for granting price improvement. In addition, the proposed price improvement requirement would apply only between 9:30 a.m. and 4:00 p.m. E.S.T., or such shorter period of time coinciding with the time that the primary market for a particular ITS-eligible security is open.

The NASD believes that this proposed rule change is consistent with the requirements of Sections 11A(a)(1) and 15A(b)(6) of the Act. Section 11A(a)(1) specifies the Congressional findings and objectives for a national market system. These include the fostering of economically efficient execution of securities transactions; the promotion of fair competition among brokers and dealers, and between exchange markets and over-the-counter securities markets; and facilitating the best execution of customers' orders. Section 15A(b)(6) requires, among other things, that the NASD's rules be designed to promote just and equitable principles of trade; foster cooperation and coordination with persons engaged in regulating and facilitating securities transactions; remove impediments to and perfect the mechanisms of the national market system; and in general to protect investors and the public interest. The NASD submits that its proposal will advance these objectives by facilitating the prompt execution of customer limit orders in ITS/CAES eligible securities in circumstances where the limit price is superior to the best bid/offer reflected in the ITS System; by curbing instances of trade-throughs in such securities by broker-dealers that are NASD members, but are not registered as ITS/CAES market makers in the affected securities; and by mandating all firms that accept and execute customer orders in securities eligible for inclusion in the ITS System provide some opportunity for price improvement in the execution of such orders. Collectively, these changes will enhance the protections afforded investors trading exchange-listed securities in the OTC market and promote the integrity, fairness and price discovery process of the OTC market for exchange-listed securities. These rule changes also will facilitate the execution of investors' orders in exchange-listed securities in the OTC market at the best available price; regardless of whether that price emanates from an exchange participant in ITS or an ITS/CAES market maker. Moreover, the new trade-through prohibition will diminish the confusion that occasionally results when the Consolidated Tape reflects a trade-through by an NASD member firm which is not registered as an ITS/CAES market maker.

Furthermore, because the NASD believes these proposals are responsive to specific recommendations made in the SEC's *Market 2000 Report* and because the NASD has addressed or responded to all of the other recommendations in the Report concerning trading in the third market, the NASD believes the SEC should take prompt action to expand the ITS/CAES Linkage to include non-Rule 19c–3 securities. Requiring NASD members to adhere to these new rules without expanding the ITS/CAES linkage would be particularly burdensome and unfair given that NASD members will be obligated to comply with these new rules and automated access to the primary markets for non-19c–3 securities through ITS will facilitate compliance with these rules by NASD members. If the ITS/CAES linkage were expanded to include all ITS-eligible securities, the NASD would correspondingly propose to expand the scope of the proposed trade-through rule and the limit order display rule to apply to all ITS-eligible securities.

B. Self-Regulatory Organization's Statement on Burden on Competition

The NASD believes that the proposed rule change will not result in any burden on competition that is not necessary or appropriate in furtherance of the purposes of the Act.

C. Self-Regulatory Organization's Statement on Comments on the Proposed Rule Change Received From Members, Participants, or Others

Comments were neither solicited nor received.

III. Date of Effectiveness of the Proposed Rule Change and Timing for Commission Action

Within 35 days of the date of publication of this notice in the **Federal Register** or within such longer period (i) as the Commission may designate up to 90 days of such date if it finds such longer period to be appropriate and publishes its reasons for so finding or (ii) as to which the NASD consents, the Commission will:

A. by order approve such proposed rule change, or

B. institute proceedings to determine whether the proposed rule change should be disapproved.

IV. Solicitation of Comments

Interested persons are invited to submit written data, views, and arguments concerning the foregoing. Persons making written submissions should fix six copies thereof with the Secretary, Securities and Exchange Commission, 450 Fifth Street, N.W., Washington, D.C. 20549. Copies of the submission, all subsequent amendments, all written statements with respect to the proposed rule change that are filed with the Commission, and all written communications relating to the proposed rule change between the Commission and any person, other than those that may be withheld from the public in accordance with the provisions of 5 U.S.C. 552, will be available for inspection and copying in the Commission's Public Reference Room. Copies of such filing will also be available for inspection and copying at the principal office of the NASD. All submissions should refer to the file number in the caption above and should be submitted by April 6, 1995.

For the Commission, by the Division of Market Regulation, pursuant to delegated authority.[10]

Margaret H. McFarland,

Deputy Secretary.

[FR Doc. 95–6504 Filed 3–15–95; 8:45 am]

BILLING CODE 8010–01–M

[Release No. 34–35467; File No. SR–MSRB–95–1]

Self-Regulatory Organizations; Notice of Filing and Order Granting Accelerated Approval of Proposed Rule Change by the Municipal Securities Rulemaking Board Relating to an Extension of the CDI Pilot System from April 6, 1995 Through December 31, 1995

March 10, 1995.

On March 7, 1995, the Municipal Securities Rulemaking Board (''Board'' or ''MSRB'') filed with the Securities and Exchange Commission (''Commission'' or ''SEC'') a proposed rule change (File No. SR–MSRB–95–1), pursuant to Section 19(b)(1) of the Securities Exchange Act of 1934 (''Act''), 15 U.S.C. 78s(b)(1), and Rule 19b–4 thereunder. The proposed rule change is described in Items I, II, and III below, which Items have been prepared by the Board. The Commission is publishing this notice to solicit comments on the proposed rule change from interested people. The Board has requested accelerated approval of the proposed rule change in order to permit the Pilot system to continue to operate without interruption.

I. Self-Regulatory Organization's Statement of the Terms of Substance of the Proposed Rule Change

The Board is filing herewith a proposed rule change to request an extension, from April 6, 1995, through December 31, 1995, of its Continuing Disclosure Information (''CDI'') Pilot system of the Municipal Securities Information Library (MSIL) system.[1]

II. Self-Regulatory Organization's Statement of the Purpose of, and Statutory Basis for, the Proposed Rule Change

In its filing with the Commission, the Board included statements concerning the purpose of and basis for the proposed rule change and discussed any comments it received on the proposed rule change. The text of these statements may be examined at the places specified in Item IV below. The Board has prepared summaries, set forth in Sections (A), (B), and (C) below, of the most significant aspects of such statements.

A. Self-Regulatory Organization's Statement of the Purpose of, and Statutory Basis for, the Proposed Rule Change

(a) On April 6, 1992, the SEC approved the CDI Pilot system for an 18-month period.[2] The CDI Pilot system began operating on January 23, 1993, and functions as part of the Board's MSIL system. The CDI Pilot system accepts and disseminates voluntary submissions of official disclosure notices relating to outstanding issues of municipal securities, *i.e.*, continuing disclosure information. During its first phase of operation, the system accepted disclosure notices only from trustees. On May 17, 1993, the Pilot system also began accepting notices from issuers.[3] On September 1, 1993, the Commission approved an 18-month extension of the Pilot system, which extension will expire on April 6, 1995.[4]

On November 10, 1994, the Commission approved amendments to its Rule 15c2–12 which prohibit a dealer from underwriting a new issue of municipal securities unless the issuer commits, among other things, to provide material events notices to the Board's CDI Pilot system or to all Nationally Recognized Municipal Securities Information Repositories (''NRMSIRs'') and to the applicable state information depository.[5] In addition, the Rule prohibits a dealer from recommending the purchase or sale of a municipal security unless the dealer has in place procedures that provide reasonable assurance that it will receive prompt notice of material events.[6] The Board is considering certain changes to the CDI Pilot system consistent with the new Commission requirements, including reconsideration of certain issuer and trustee enrollment procedures and page limits on submissions.

The Board believes that an extension of the operation of the CDI Pilot system will give it sufficient time to determine the system changes needed, in consultation with the Commission as well as potential users of the system, including NRMSIRs. We anticipate filing system changes well before the December 31, 1995, extension date. At that time, the Board also plans to ask the Commission for permanent approval of the revised CDI system.

(b) The Board believes the proposed rule change is consistent with Section 15B(b)(2)(C) of the Act, which provides that the Board's rules shall:

> Be designed to prevent fraudulent and manipulative acts and practices, to promote just and equitable principles of trade, to foster cooperation and coordination with persons engaged in regulating, clearing, settling, processing information with respect to, and facilitating transactions in municipal securities, to remove impediments to and perfect the mechanism of a free and open market in municipal securities, and, in general, to protect investors and the public interest.

The MSIL system is designed to increase the integrity and efficiency of the municipal securities market by, among other things, helping to ensure that the price charged for an issue in the secondary market reflects all available official information about that issue. The Board will continue to operate the output of the CDI Pilot system to ensure that the information is available to any party who wishes to subscribe to the service. As with all MSIL system services, this service is available, on equal terms, to any party requesting the service.

B. Self-Regulatory Organization's Statement on Burden on Competition

The Board does not believe that the proposed rule change will impose any burden on competition not necessary or appropriate in furtherance of the purposes of the Act.

C. Self-Regulatory Organization's Statement on Comments on the Proposed Rule Change Received From Members, Participants, or Others

Written comments were neither solicited nor received.

III. Date of Effectiveness of the Proposed Rule Change and Timing for Commission Action

The Board has requested that the Commission find good cause, pursuant to Section 19(b)(2) of the Act, for approving the proposed rule change prior to the thirtieth day after

---

[10] 17 CFR 200.30–3(a)(12).

[1] The MUNICIPAL SECURITIES INFORMATION LIBRARY system and the MSIL system are trademarks of the Board. The MSIL system, which was approved in Securities Exchange Act Release No. 29298 (June 13, 1991) 56 FR 28194, is a central facility through which information about municipal securities is collected, stored and disseminated.

[2] Securities Exchange Act Release No. 30556 (April 6, 1992), 57 FR 12534. A complete description of the CDI system is contained in File No. SR–MSRB–90–4, Amendment No. 1.

[3] On May 17, 1993, the Board reported to the Commission on the initial phase of operation of the CDI system regarding technical, policy and cost issues and proposed enhancements to the system.

[4] Securities Exchange Act Release No. 32825 (September 1, 1993), 58 FR 47306.

[5] Securities Exchange Act Release No. 34961 (November 10, 1994), 59 FR 59590. This provision of the Rule will become effective on July 3, 1995.

[6] The effective date of this provision of the Rule is January 1, 1996.

publication of the notice of filing in the **Federal Register**. The Board believes that such accelerated approval would permit the Pilot system to continue to operate without interruption. The Board further believes that the CDI Pilot system will increase the integrity and efficiency of the municipal securities market by helping to ensure that the price charged for an issue in the secondary market reflects all available official information about that issue.

IV. Solicitation of Comments

Interested people are invited to submit written data, views, and arguments concerning the foregoing. People making written submissions should file six copies thereof with the Secretary, Securities and Exchange Commission, 450 Fifth Street, N.W., Washington, D.C. 20549. Copies of the submission, all subsequent amendments, all written statements with respect to the proposed rule change that are filed with the Commission, and all written communications relating to the proposed rule change between the Commission and any person, other than those that may be withheld from the public in accordance with the provisions of 5 U.S.C. 552, will be available for inspection and copying in the Commission's Public Reference Room. Copies of the filing will also be available for inspection and copying at the Board's principal offices. All submissions should refer to File No. SR–MSRB–95–1 and should be submitted by April 6, 1995.

V. Commission's Findings and Order Granting Accelerated Approval of Proposed Rule Change

The Commission finds that the proposed rule change is consistent with the requirements of the Act and the rules and regulations thereunder applicable to the Board, and, in particular, the requirements of Section 15B and the rules and regulations thereunder.

The Commission finds good cause for approving the proposed rule change prior to the thirtieth day after the date of publication of the notice of filing in the **Federal Register**, in that accelerated approval is appropriate to provide for uninterrupted operation of the CDI system.

It Is Therefore ordered, pursuant to Section 19(b)(2) of the Act,[7] that the proposed rule change be, and hereby is, approved for an additional 8-month period ending on December 31, 1995.

For the Commission by the Division of Market Regulation, pursuant to delegated authority.[8]

Margaret H. McFarland,

Deputy Secretary.

[FR Doc. 95–6444 Filed 3–15–95; 8:45 am]

BILLING CODE 8010–01–M

[7] 15 U.S.C. 78s(b)(2).

[8] 17 U.S.C. 200.30–3(a)(12)

[Investment Company Act Release No. 20950; File No. 811–5647]

Voltaire Capital, Inc.; Application for Deregistration

March 10, 1995.

AGENCY: Securities and Exchange Commission (''SEC'').

ACTION: Notice of Application for Deregistration under the Investment Company Act of 1940 (the ''Act'').

APPLICANT: Voltaire Capital, Inc.

RELEVANT ACT SECTION: Section 8(f).

SUMMARY OF APPLICATION: Applicant seeks an order declaring that it has ceased to be an investment company.

FILING DATES: The application on Form N–8F was filed on January 4, 1995, and amended on March 9, 1995.

HEARING OR NOTIFICATION OF HEARING: An order granting the application will be issued unless the SEC orders a hearing. Interested persons may request a hearing by writing to the SEC's Secretary and serving applicant with a copy of the request, personally or by mail. Hearing requests should be received by the SEC by 5:30 p.m. on April 4, 1995, and should be accompanied by proof of service on applicant, in the form of an affidavit or, for lawyers, a certificate of service. Hearing requests should state the nature of the writer's interest, the reason for the request, and the issues contested. Persons who wish to be notified of a hearing may request notification by writing to the SEC's Secretary.

ADDRESSES: Secretary, SEC, 450 5th Street, NW., Washington, DC 20549. Applicant, c/o SCOR U.S. Corporation, 110 William Street, 18th Floor, New York, New York 10038.

FOR FURTHER INFORMATION CONTACT: James J. Dwyer, Staff Attorney, at (202) 942–0581, or C. David Messman, Branch Chief, at (202) 942–0564 (Division of Investment Management, Office of Investment Company Regulation).

SUPPLEMENTARY INFORMATION: The following is a summary of the application. The complete application may be obtained for a fee at the SEC's Public Reference Branch.

Applicant's Representations

1. Applicant is an open-end non-diversified management investment company that was organized as a Maryland corporation. On August 30, 1988, applicant registered under the Act as an investment company. On November 28, 1988, applicant filed a registration statement on From N–1A under the Securities Act of 1933. The registration statement was never declared effective, and applicant never made any public offer or sale of its securities.

2. At all times, applicant had only one shareholder. From 1988 to 1990, applicant's stock was owned by UAP Reassurances, which is a wholly-owned subsidiary of UAP Group, a publicly traded French corporation. In 1990, SCOR, S.A., a French corporation whose securities are publicly traded in France, succeeded to the ownership of applicant's stock following a combination with UAP Reassurances. During applicant's existence, applicant's sole shareholder contributed capital to and withdrew capital from applicant from time to time.

3. On February 1, 1995, applicant made a final distribution of $35,129.63 to its sole shareholder. Applicant has no shareholders, assets or liabilities. Applicant is not a party to any litigation or administrative proceeding.

4. On February 3, 1995, applicant's Articles of Dissolution were filed with and approved by the State of Maryland. Applicant is not engaged and does not propose to engage in any business activities other than those necessary for the winding up of its affairs.

For the SEC, by the Division of Investment Management, under delegated authority.

Margaret H. McFarland,

Deputy Secretary.

[FR Doc. 95–6503 Filed 3–15–95; 8:45 am]

BILLING CODE 8010–01–M

[Release No. 35–26249]

Filings Under the Public Utility Holding Company Act of 1935, as amended (''Act'')

March 10, 1995.

Notice is hereby given that the following filing(s) has/have been made with the Commission pursuant to provisions of the Act and rules promulgated thereunder. All interested persons are referred to the application(s) and/or declaration(s) for complete statements of the proposed transaction(s) summarized below. The application(s) and/or declaration(s) and any amendments thereto is/are available for public inspection through the

Commission's Office of Public Reference.

Interested persons wishing to comment or request a hearing on the application(s) and/or declaration(s) should submit their views in writing by April 3, 1995, to the Secretary, Securities and Exchange Commission, Washington, D.C. 20549, and serve a copy on the relevant applicant(s) and/or declarant(s) at the address(es) specified below. Proof of service (by affidavit or, in case of an attorney at law, by certificate) should be filed with the request. Any request for hearing shall identify specifically the issues of fact or law that are disputed. A person who so requests will be notified of any hearing, if ordered, and will receive a copy of any notice or order issued in the matter. After said date, the application(s) and/or declaration(s), as filed or as amended, may be granted and/or permitted to become effective.

Kingsport Power Company, et al. (70–8581)

Kingsport Power Company (''Kingsport''), 422 Broad Street, Kingsport, Tennessee 37660, and Wheeling Power Company, Inc. (''Wheeling''), 51 Sixteenth Street, Wheeling, West Virginia 26003, electric utility subsidiary companies of America Electric Power Company, Inc., 1 Riverside Plaza, Columbus, Ohio 43215, a registered holding company, have filed a declaration under sections 6(a) and 7 of the Act and rule 54 thereunder.

Kingsport and Wheeling propose to issue from time-to-time through December 31, 1996, up to $19 million and $28 million at any one time outstanding, respectively, unsecured promissory notes (''Notes'') to one or more commercial banks, other financial institutions or institutional investors in accordance with a term-loan agreement. The Notes will mature in not less than nine months nor more than ten years and will have a fixed or floating rate of interest, or a combination of both. The actual rate of interest of each Note shall be subject to negotiations between the borrower and the lender, but any fixed rate of interest will not exceed 250 basic points over the yield, at issuance, of U.S. Treasury obligations with comparable maturity dates, and a floating rate will not exceed 200 basis points over the prime rate as announced from time to time by a major bank. No fees or compensating balances will be paid to or maintained with a lender. However, if a bank or financial institution arranges financing with a third party, the institution may charge a placement fee not in excess of 7/8 percent of the principal amount of the borrowing.

Kingsport and Wheeling will use the proceeds from the sale of the Notes to refund long-term debt and, to the extent internally generated funds are insufficient, to fund their respective construction programs or to repay short-term unsecured debt incurred to refund long-term debt or to fund its construction program. Kingsport has two maturing term loans: (1) a $2 million term loan due November 1, 1995, bearing interest at 9.72 per annum; and (2) a $10 million term loan due January 22, 1996, bearing interest at 10.78% per annum. At February 1, 1995, Kingsport had $3.35 million short-term debt outstanding. Kingsport estimates that its construction costs will be $9 million during 1995. Wheeling has two maturing term loans: (1) an $11 million term loan due November 1, 1995, bearing interest at 9.72% per annum; and (2) a $10 million term loan due January 22, 1996, bearing interest at 10.78% per annum. At February 1, 1995, Wheeling had $7.825 million of short term debt outstanding. Wheeling estimates that its construction costs will be $5.5 million during 1995 and $4.6 million during 1996.

For the Commission, by the Division of Investment Management, pursuant to delegated authority.

Margaret H. McFarland,

Deputy Secretary.

[FR Doc. 95–6443 Filed 3–15–95; 8:45 am]

BILLING CODE 8010–01–M

DEPARTMENT OF STATE

[Public Notice 2179]

Fine Arts Committee; Notice of Meeting

The Fine Arts Committee of the Department of State will meet on Saturday, April 8, 1995 at 10:30 a.m. in the John Quincy Adams State Drawing Room. The meeting will last until approximately 12:00 noon and is open to the public.

The agenda for the committee meeting will include a summary of the work of the Fine Arts Office since its last meeting in September 1994 and the announcement of gifts and loans of furnishings as well as financial contributions for calendar year 1994.

Public access to the Department of State is strictly controlled. Members of the public wishing to take part in the meeting should telephone the fine Arts Office by Wednesday, April 5, 1995, telephone (202) 647–1990 to make arrangements to enter the building. The public may take part in the discussion as long as time permits and at the discretion of the chairman.

Dated: March 3, 1995.

Clement E. Conger,

Chairman, Fine Arts Committee.

[FR Doc. 95–6493 Filed 3–15–95; 8:45 am]

BILLING CODE 4710–38–M

DEPARTMENT OF TRANSPORTATION

Federal Aviation Administration

Noise Exposure Map Notice, Fort Lauderdale Executive Airport; Fort Lauderdale, FL

AGENCY: Federal Aviation Administration, DOT.

ACTION: Notice.

SUMMARY: The Federal Aviation Administration (FAA) announces its determination that the revised noise exposure maps submitted by the City of Fort Lauderdale for the Fort Lauderdale Executive Airport under the provisions of Title I of the Aviation Safety and Noise Abatement Act of 1979 (Public Law 96–193) and 14 CFR Part 150 are in compliance with applicable requirements.

EFFECTIVE DATE: The effective date of FAA's determination on the revised noise exposure maps is March 7, 1995.

FOR FURTHER INFORMATION CONTACT: Mr. Tommy J. Pickering, P.E., Federal Aviation Administration, Orlando Airports District Office, 9677 Tradeport Drive, Suite 130, Orlando, Florida 32827–5397, (407) 648–6583.

SUPPLEMENTARY INFORMATION: This notice announces that the FAA finds that the revised noise exposure maps submitted for the Fort Lauderdale Executive Airport are in compliance with applicable requirements of Part 150, effective March 7, 1995.

Under section 103 of the Aviation Safety and Noise Abatement Act of 1979 (hereinafter referred to as ''the Act''), an airport operator may submit to the FAA noise exposure maps which meet applicable regulations and which depict noncompatible land uses as of the date of submission of such maps, a description of projected aircraft operations, and the ways in which such operations will affect such maps. The Act requires such maps to be developed in consultation with interested and affected parties in the local community, government agencies, and persons using the airport. An airport operator who has submitted noise exposure maps that are found by FAA to be in compliance with the requirements of Federal Aviation

Regulations (FAR) Part 150, promulgated pursuant to Title I of the Act, may submit a noise compatibility program for FAA approved which sets forth the measures the operator has taken or proposes for the reduction of existing noncompatible uses and for the prevention of the introduction of additional noncompatible uses.

The FAA has completed its review of the revised noise exposure maps and related descriptions submitted by the City of Fort Lauderdale. The specific maps under consideration are ''Existing Conditions (1994) Noise Exposure Map'' and ''Five-Year Forecast (1999) Noise Exposure Map'' in the submission. The FAA has determined that these maps for the Fort Lauderdale Executive Airport are in compliance with applicable requirements. This determination is effective on March 7, 1995. FAA's determination on an airport operator's noise exposure maps is limited to a finding that the maps were developed in accordance with the procedures contained in Appendix A of FAR Part 150. Such determination does not constitute approval of the applicant's data, information or plans, or a commitment to approve a noise compatibility program or to find the implementation of that program.

If questions arise concerning the precise relationship of specific properties to noise exposure contours depicted on a noise exposure map submitted under Section 103 of the Act, it should be noted that the FAA is not involved in any way in determining the relative locations of specific properties with regard to the depicted noise contours, or in interpreting the noise exposure maps to resolve questions concerning, for example, which properties should be covered by the provisions of Section 107 of the Act. These functions are inseparable from the ultimate land use control and planning responsibilities of local government. These local responsibilities are not changed in any way under Part 150 or through FAA's review of noise exposure maps. Therefore, the responsibility for the detailed overlaying of noise exposure contours onto the map depicting properties on the surface rests exclusively with the airport operator which submitted those maps, or with those public agencies and planning agencies with which consultation is required under Section 103 of the Act. The FAA has relied on the certification by the airport operator, under Section 150.21 of FAR Part 150, that the statutorily required consultation has been accomplished.

Copies of the revised noise exposure maps and of the FAA's evaluation of the maps are available for examination at the following locations:

Federal Aviation Administration, Orlando Airports District Office, 9677 Tradeport Drive, Suite 130, Orlando, Florida 32827–5397

Airport Manager's Office, Fort Lauderdale Executive Airport, 1401 West Commercial Blvd., Suite 200, Fort Lauderdale, Florida 33309

Questions may be directed to the individual named above under the heading, **FOR FURTHER INFORMATION CONTACT.**

Issued in Orlando, Florida, March 7, 1995.

Charles E. Blair,

Manager, Orlando Airports District Office.

[FR Doc. 95–6515 Filed 3–15–95; 8:45 am]

BILLING CODE 4910–13–M

Aviation Rulemaking Advisory Committee Meeting on Air Traffic Issues

AGENCY: Federal Aviation Administration (FAA), DOT.

ACTION: Notice of meeting; correction.

SUMMARY: The notice corrects the start time described in a notice of meeting published on March 6, 1995 (60 FR 12280).

DATES: The meeting will be held on March 24, 1995, at 9 a.m.

ADDRESSES: The meeting will be held at the Federal Aviation Administration, 800 Independence Ave., NW., Washington, DC.

FOR FURTHER INFORMATION CONTACT: Mr. Reginald C. Matthews, Air Traffic Rules and Procedures Service, Federal Aviation Administration, telephone: 202–267–8783.

SUPPLEMENTARY INFORMATION: On March 6, 1995, the Federal Aviation Administration published a notice announcing an Aviation Rulemaking Advisory Committee Meeting on Air Traffic Issues. Under **SUPPLEMENTARY INFORMATION,** that document erroneously indicated 1 p.m. as the start time for the meeting. The correct start time for the meeting is 9 a.m.

Issued in Washington, DC., on March 10, 1995.

Reginald C. Matthews,

Assistant Executive Director, Aviation Rulemaking Advisory Committee on Air Traffic Issues.

[FR Doc. 95–6516 Filed 3–15–95; 8:45 am]

BILLING CODE 4910–13–M

Notice of Intent To Rule on Application To Impose and Use the Revenue From a Passenger Facility Charge (PFC) at Lebanon Municipal Airport

AGENCY: Federal Aviation Administration (FAA), DOT.

ACTION: Notice of Intent to Rule on Application.

SUMMARY: The FAA proposes to rule and invites public comment on the application to impose and use the revenue from a Passenger Facility Charge at Lebanon Municipal Airport under the provisions of the Aviation Safety and Capacity Expansion Act of 1990 (Title IX of the Omnibus Budget Reconciliation Act of 1990) (Public Law 101–508) and Part 158 of the Federal Aviation Regulations (14 CFR Part 158).

DATES: Comments must be received on or before April 17, 1995.

ADDRESSES: Comments on this application may be mailed or delivered in triplicate to the FAA at the following address: Federal Aviation Administration, Airport Division, 12 New England Executive Park, Burlington, Massachusetts 01803.

In addition, one copy of any comments submitted to the FAA must be mailed or delivered to Mr. Timothy J. Edwards, Airport Manager for Lebanon Municipal Airport at the following address: Lebanon Municipal Airport, 5 Airport Road, West Lebanon, New Hampshire, 03784.

Air carriers and foreign air carriers may submit copies of written comments previously provided to the City of Lebanon under section 158.23 of Part 158 of the Federal Aviation Regulations.

FOR FURTHER INFORMATION CONTACT: Priscilla A. Soldan, Airports Program Specialist, Federal Aviation Administration, Airports Division, 12 New England Executive Park, Burlington, Massachusetts 01803, (617) 238–7614. The application may be reviewed in person at 16 New England Executive Park, Burlington Massachusetts.

SUPPLEMENTARY INFORMATION: The FAA proposes to rule and invites public comment on the application to impose and use the revenue from a Passenger Facility Charge (PFC) at Lebanon Municipal Airport under the provisions of the Aviation Safety and Capacity Expansion Act of 1990 (Title IX of the Omnibus Budget Reconciliation Act of 1990) (Public Law 101–508) and Part 158 of the Federal Aviation Regulations (14 CFR Part 158).

On March 6, 1995, the FAA determined that the application to impose and use the revenue from a PFC

submitted by the City of Lebanon was substantially complete within the requirements of section 158.25 of Part 158 of the Federal Aviation Regulations. The FAA will approve or disapprove the application, in whole or in part, no later than June 5, 1995.

The following is a brief overview of the use application.

Level of the proposed PFC: $3.00
Proposed change effective date: July 15, 1995
Proposed charge expiration date: July 15, 1995
Estimated total net PFC revenue: $449,297
Brief description of projects:
Impose and use projects:
- Reconstruct Runway 7–25
- Improve Runway 7–25 Safety Areas
- Design and Extend Taxiway A
- Purchase Snow Removal Equipment
- Environmental Assessment/Runway 18–36 (Phase I)
- Environmental Assessment/Runway 18–36 (Phase II)
- Design Runway 18–36 Reconstruction
- Purchase Aircraft Rescue and Fire Fighting Vehicle
- Purchase Snow Removal Equipment

Impose Only Projects:
- Reconstruction of Runway 18–36
- Expand General Aviation Expansion (South Ramp)
- Reconstruct Taxiway A

Class or classes of air carriers which the public agency has requested not be required to collect PFCs: Non Excluded.

Any person may inspect the application in person at the FAA office listed above under **FOR FURTHER INFORMATION CONTACT**.

In addition, any person may, upon request, inspect the application, notice and other documents germane to the application in person at the Lebanon Airport, 5 Airpark Road, West Lebanon, New Hampshire 03784.

Issues in Burlington, Massachusetts on March 8, 1995.

Bradley A. Davis,

Assistant Manager, Airports Division New England Region.

[FR Doc. 95–6517 Filed 3–15–95; 8:45 am]

BILLING CODE 4910–13–M

Federal Highway Administration

Environmental Impact Statement: Edmonds, Snohomish County, WA

AGENCY: Federal Highway Administration (FHWA), DOT.

ACTION: Notice of intent.

SUMMARY: The FHWA is issuing this notice to advise the public that an Environmental Impact Statement (EIS) will be prepared for the Proposed Edmonds Multi-Modal Transportation Center project in the city of Edmonds, Snohomish County Washington.

FOR FURTHER INFORMATION CONTACT: Gene K. Fong, Division Administrator, Federal Highway Administration, Evergreen Plaza Building, 711 South Capitol Way, Suite 501, Olympia, Washington 98501, Telephone: (360) 753–9413; Paul L. Green, Director/CEO, Washington State Ferries, 801 Alaska Way, Seattle, Washington 98104–1487, Telephone 206–464–7800; Paul Mar, Director of Community Services, City of Edmonds, 250 5th Avenue, Edmonds, Washington 98020, Telephone (206) 771–0220.

SUPPLEMENTARY INFORMATION: The FHWA, in cooperation with the Washington State Department of Transportation, the Federal Transit Administration, the U.S. Army Corps of Engineers, Community Transit, and the city of Edmonds will prepare an EIS for a proposed Edmonds Multi-Modal Transportation Center project in the city of Edmonds, Snohomish County, Washington. The proposed action will integrate Edmonds' ferry, rail, and bus transportation needs in a new complex. More specifically, the multi-modal facility will provide: a ferry terminal that meets the operational requirements to accommodate forecasted ferry ridership demands; a train station that meets the inter-city passenger service and commuter rail loading requirements; a transit center that meets the local bus system and regional transit system loading requirements; and a linkage system between these station/terminals that meets the operational and safety requirements of each mode.

This project is intended to address the conflicts between ferry, rail, auto, and pedestrian traffic in the confined area of downtown Edmonds. During ferry loading and unloading operations, all other non-ferry traffic is disrupted. The lack of grade separation between the rail line and ferry access often creates slowdowns in ferry operation. These conflicts interrupt the efficient movement of people and goods in and through the downtown area, create an unsafe facility for users of all modes, complicate access to local businesses and, in general, stymie the economic development of the City's downtown. Relocating the terminal to another location away from the immediate downtown area is seen as a solution to these conflicts. Access to the ferry terminal is via SR 104 through the downtown area, bisecting the commercial district and the regional waterfront park. Relocating the ferry terminal and SR 104 will thus separate ferry and non-ferry traffic and eliminate current conflicts. In addition, the existing ferry terminal is inadequate to handle today's ferry demands. The facility needs to be upgraded to include two landing slips and a separate loading/unloading facility for walk-on passengers. Currently, walk-on passengers loan and unload through the car deck, raising concern regarding safety and Americans with Disabilities Act (ADA) compliance. Finally, the existing train station does not meet ADA standards and needs major structural upgrading. To promote non-auto modes, the train station would be located close to the relocated ferry terminal.

Two preliminary build alternatives and the no action alternative have been identified for analysis in the EIS. The two build alternatives would establish the proposed multi-modal center by relocating the existing Washington State Ferry terminal from Main Street to one of two sites: (1) Point Edwards Site located approximately ¾ mile south of Main Street, and (2) a Mid Waterfront Site located roughly half way between the Point Edwards site and Main Street. In both build alternatives, SR 104 would be realigned north of Pine Street to past through the existing Unocal owned site and provide direct access to the proposed multi-modal center.

Major issues related to environmental resources have been identified for these preliminary build alternatives in the following areas: vegetation, wildlife, and fisheries; wetlands; hazardous waste; park lands and recreational facilities; water quality; floodplains; land use; air qualify; multimodal transportation; and visual quality.

The no action alternative would maintain the ferry terminal at the existing Main Street location without any additional improvements to link ferry, rail, and bus transportation services.

To begin a formal scoping period, letters describing the proposed action and soliciting comments will be sent to appropriate Federal, State and local agencies, affected Native-American groups, and private organizations and citizens who have previously expressed or are known to have interest in this proposal. A public scoping meeting has been tentatively scheduled for April, 1995 to solicit public input. An open house and public hearing will be held to receive comments on the draft EIS after it is approved for circulation. The draft EIS will be available for public and agency review and comment prior to the public hearing. Public notice will be given of the time and place of the scoping meeting, open house and

hearing, and of the availability of the draft EIS.

To assure that the full range of issues related to this proposed action are addressed and all significant issues identified, comments and suggestions are invited from all interested parties. Comments or questions concerning this proposed action and the EIS, or requests to be added to the mailing list, should be directed to the FHWA at the address provided above.

(Catalog of Federal Domestic Assistance Number 20.205, Highway Research, Planning and Construction. The regulations implementing Executive Order 12372 regarding intergovernmental consultation on Federal programs and activities apply to this program)

Issued on: March 8, 1995.

José M. Miranda,

Environmental Program Manager, Olympia Washington.

[FR Doc. 95–6495 Filed 3–15–95; 8:45 am]

BILLING CODE 4910–22–M

National Highway Traffic Safety Administration

[Docket No. 95–18; Notice 1]

Notice of Receipt of Petition for Decision That Nonconforming 1991 Yamaha FJ1200 (4CR) Motorcycles Are Eligible for Importation

AGENCY: National Highway Traffic Safety Administration, DOT

ACTION: Notice of receipt of petition for decision that nonconforming 1991 Yamaha FJ1200 (4CR) motorcycles are eligible for importation.

SUMMARY: This notice announces receipt by the National Highway Traffic Safety Administration (NHTSA) of a petition for a decision that a 1991 Yamaha FJ1200 (4CR) that was not originally manufactured to comply with all applicable Federal motor vehicle safety standards is eligible for importation into the United States because (1) It is substantially similar to a vehicle that was originally manufactured for importation into and sale in the United States and that was certified by its manufacturer as complying with the safety standards, and (2) it is capable of being readily altered to conform to the standards.

DATES: The closing date for comments on the petition is April 17, 1995.

ADDRESSES: Comments should refer to the docket number and notice number, and be submitted to: Docket Section, Room 5109, National Highway Traffic Safety Administration, 400 Seventh St., SW, Washington, DC 20590. (Docket hours are from 9:30 am to 4 pm.)

FOR FURTHER INFORMATION CONTACT: Ted Bayler, Office of Vehicle Safety Compliance, NHTSA (202–366–5306).

SUPPLEMENTARY INFORMATION:

Background

Under 49 U.S.C. 30141(a)(1)(A) (formerly section 108(c)(3)(A)(i)(I) of the National Traffic and Motor Vehicle Safety Act (the Act)), a motor vehicle that was not originally manufactured to conform to all applicable Federal motor vehicle safety standards shall be refused admission into the United States unless NHTSA has decided that the motor vehicle is substantially similar to a motor vehicle originally manufactured for importation into and sale in the United States, certified under 49 U.S.C. 30115 (formerly section 114 of the Act), and of the same model year as the model of the motor vehicle to be compared, and is capable of being readily altered to conform to all applicable Federal motor vehicle safety standards.

Petitions for eligibility decisions may be submitted by either manufacturers or importers who have registered with NHTSA pursuant to 49 CFR part 592. As specified in 49 CFR 593.7, NHTSA publishes notice in the **Federal Register** of each petition that it receives, and affords interested persons an opportunity to comment on the petition. At the close of the comment period, NHTSA decides, on the basis of the petition and any comments that it has received, whether the vehicle is eligible for importation. The agency then publishes this decision in the **Federal Register**.

Champagne Imports, Inc. of Lansdale, Pennsylvania (''Champagne'') (Registered Importer 90–009) has petitioned NHTSA to decide whether 1991 Yamaha FJ1200 (4CR) motorcycles are eligible for importation into the United States. The vehicle which Champagne believes is substantially similar is the 1991 Yamaha FJ1200 (4CR) motorcycle that was manufactured for importation into, and sale in, the United States and certified by its manufacturer as conforming to all applicable Federal motor vehicle safety standards.

The petitioner claims that it carefully compared the non-U.S. certified 1991 Yamaha FJ1200 (4CR) motorcycle to its U.S. certified counterpart, and found the two vehicles to be substantially similar with respect to compliance with most Federal motor vehicle safety standards.

Champagne submitted information with its petition intended to demonstrate that the non-U.S. certified 1991 Yamaha FJ1200 (4CR) motorcycle, as originally manufactured, conforms to many Federal motor vehicle safety standards in the same manner as its U.S. certified counterpart, or is capable of being readily altered to conform to those standards.

Specifically, the petitioner claims that the 1991 Yamaha FJ1200 (4CR) is identical to its U.S. certified counterpart with respect to compliance with Standards Nos. 106 *Brake Hoses*, 111 *Rearview Mirrors*, 115 *Vehicle Identification Number*, 116 *Motor Vehicle Brake Fluids*, 122 *Motorcycle Brake Systems* and 205 *Glazing Materials*.

The petitioner further contends that the vehicle is capable of being readily altered to meet the following standards, in the manner indicated:

Standard No. 108 *Lamps, Reflective Devices, and Associated Equipment:* (a) Installation of a U.S. model headlamp; (b) installation of a U.S. model flasher relay/lamp assembly; (c) installation of a U.S. model taillamp assembly.

Standard No. 119 *New Pneumatic tires for Vehicles other than Passenger Cars:* Replacement of the original tires with ones that bear the DOT marking and a tire identification number.

Standard No. 120 *Tire Selection and Rims for Motor Vehicles other than Passenger Cars:* Installation of a tire information placard.

Standard No. 123 *Motorcycle Controls and Displays:* Replacement of the speedometer/odometer with one calibrated in miles per hour.

Interested persons are invited to submit comments on the petition described above. Comments should refer to the docket number and be submitted to: Docket Section, National Highway Traffic Safety Administration, Room 5109, 400 Seventh Street, SW., Washington, DC 20590. It is requested but not required that 10 copies be submitted.

All comments received before the close of business on the closing date indicated above will be considered, and will be available for examination in the docket at the above address both before and after that date. To the extent possible, comments filed after the closing date will also be considered. Notice of final action on the petition will be published in the **Federal Register** pursuant to the authority indicated below.

Authority: 49 U.S.C. 30141 (a)(1)(B) and (b)(1); 49 CFR 593.8; delegations of authority at 49 CFR 1.50 and 501.8.

Issued on March 10, 1995.

Harry Thompson,

Acting Director, Office of Vehicle Safety Compliance.

[FR Doc. 95–6482 Filed 3–15–95; 8:45 am]

BILLING CODE 4910–59–M

Annual List of Nonconforming Vehicles Decided To Be Eligible for Importation; Correction

AGENCY: National Highway Traffic Safety Administration (NHTSA), DOT.

ACTION: Correction to annual list of nonconforming vehicles decided to be eligible for importation.

SUMMARY: This document corrects a notice published on February 13, 1995 (60 FR 8268) listing all vehicles not originally manufactured to comply with all applicable Federal motor vehicle safety standards that NHTSA has decided, as of January 27, 1995, to be eligible for importation into the United States under 49 U.S.C. 30141(a)(1) (formerly section 108(c)(3)(C)(i) of the National Traffic and Motor Vehicle Safety Act of 1966). The following vehicles that had been decided eligible for importation prior to January 17, 1995 were inadvertently omitted from the list of vehicles manufactured for other than the Canadian market set forth in Annex A to the notice:

VSP	Make	Mode type	Model ID	Model year
91	BMW	750iL		1990
92	Volkswagen	Golf		1993
93	Audi	100		1989
94	Mercedes-Benz	300CE	124.061	1993
95	Volvo	940GL		1993
96	BMW	325i		1991
97	Porsche	944		1990
98	MG	BGT		1972
99	BMW	840Ci		1993
101	Toyota	Land Cruiser		1989
102	Toyota	Land Cruiser		1991

Authority: 49 U.S.C. 30141(b)(2); 49 CFR 593.8; delegations of authority at 49 CFR 1.50 and 501.8.

Issued on March 10, 1995.

Harry Thompson,

Acting Director, Office of Vehicle Safety Compliance.

[FR Doc. 95–6480 Filed 3–15–95; 8:45 am]

BILLING CODE 4910–59–M

[Docket No. 94–99; Notice 2]

Decision That Nonconforming 1988 Honda CB1000F Motorcycles Are Eligible for Importation

AGENCY: National Highway Traffic Safety Administration (NHTSA), DOT.

ACTION: Notice of decision by NHTSA that nonconforming 1988 Honda CB1000F motorcycles are eligible for importation.

SUMMARY: This notice announces the decision by NHTSA that 1988 Honda CB1000F motorcycle passenger cars not originally manufactured to comply with all applicable Federal motor vehicle safety standards are eligible for importation into the United States because they are substantially similar to a vehicle originally manufactured for importation into and sale in the United States and certified by its manufacturer as complying with the safety standards (the U.S.-certified version of the 1988 Honda CB1000F motorcycle), and they are capable of being readily altered to conform to the standards.

DATES: This decision is effective as of March 16, 1995.

FOR FURTHER INFORMATION CONTACT: Ted Bayler, Office of Vehicle Safety Compliance, NHTSA (202–366–5306).

SUPPLEMENTARY INFORMATION:

Background

Under 49 U.S.C. 30141(a)(1)(A) (formerly section 108(c)(3)(A)(i) of the National Traffic and Motor Vehicle Safety Act (the Act)), a motor vehicle that was not originally manufactured to conform to all applicable Federal motor vehicle safety standards shall be refused admission into the United States unless NHTSA has decided that the motor vehicle is substantially similar to a motor vehicle originally manufactured for importation into and sale in the United States, certified under 49 U.S.C. 30115 (formerly section 114 of the Act), and of the same model year as the model of the motor vehicle to be compared, and is capable of being readily altered to conform to all applicable Federal motor vehicle safety standards.

Petitions for eligibility decisions may be submitted by either manufacturers or importers who have registered with NHTSA pursuant to 49 CFR part 592. As specified in 49 CFR 593.7, NHTSA publishes notice in the **Federal Register** of each petition that it receives, and affords interested persons an opportunity to comment on the petition. At the close of the comment period, NHTSA decides, on the basis of the petition and any comments that it has received, whether the vehicle is eligible for importation. The agency then publishes this decision in the **Federal Register**.

J.K. Motors of Kingsville, Maryland (Registered importer R–90–006) petitioned NHTSA to decide whether 1988 Honda CB1000F motorcycles are eligible for importation into the United States. NHTSA published notice of the petition on December 28, 1994 (59 FR 67003) to afford an opportunity for public comment. The reader is referred to that notice for a thorough description of the petition. No comments were received in response to the notice. Based on its review of the information submitted by the petitioner. NHTSA has decided to grant the petition.

Vehicle Eligibility Number for Subject Vehicles

The importer of a vehicle admissible under any final decision must indicate on the form HS–7 accompanying entry the appropriate vehicle eligibility number indicating that the vehicle is eligible for entry. VSP 106 is the vehicle eligibility number assigned to vehicles admissible under this decision.

Final Determination

Accordingly, on the basis of the foregoing, NHTSA hereby decides that a 1988 Honda CB1000F motorcycle not originally manufactured to comply with all applicable Federal motor vehicle safety standards is substantially similar to a 1988 Honda CB1000F motorcycle

originally manufactured for importation into and sale in the United States and certified under 49 U.S.C. § 30115, and is capable of being readily altered to conform to all applicable Federal motor vehicle safety standards.

Authority: 49 U.S.C. 30141 (a)(1)(A) and (b)(1); 49 CFR 593.8; delegations of authority at 49 CFR 1.50 and 501.8.

Issued on: March 10, 1995.

Harry Thompson,

Director, Office of Vehicle Safety Compliance.

[FR Doc. 95–6481 Filed 3–15–95; 8:45 am]

BILLING CODE 4910–59–M

[NHTSA Docket No. 94–021; Notice 2]

Highway Safety Programs; Model Specifications for Devices to Measure Breath Alcohol

AGENCY: National Highway Traffic Safety Administration, DOT.

ACTION: Notice.

SUMMARY: This notice amends the Conforming Products List for instruments that conform to the Model Specifications for Evidential Breath Testing Devices (58 FR 48705).

EFFECTIVE DATE: March 16, 1995.

FOR FURTHER INFORMATION CONTACT: Dr. James F. Frank, Office of Alcohol and State Programs, NTS–21, National Highway Traffic Safety Administration, 400 Seventh Street, SW, Washington, DC 20590; Telephone: (202) 366–5593.

SUPPLEMENTAL INFORMATION: On November 5, 1973, the National Highway Traffic Safety Administration (NHTSA) published the Standards for Devices to Measure Breath Alcohol (38 FR 30459). A Qualified Products List of Evidential Breath Measurement Devices comprised of instruments that met this standard was first issued on November 21, 1974 (39 FR 41399).

On December 14, 1984 (49 FR 48854), NHTSA converted this standard to Model Specifications for Evidential Breath Testing Devices, and published a Conforming Products List (CPL) of instruments that were found to conform to the Model Specifications as Appendix D to that notice (49 FR 48864).

On September 17, 1993, NHTSA published a notice (58 FR 48705) to amend the Model Specifications. The notice changed the alcohol concentration levels at which instruments are evaluated, from 0.000, 0.050, 0.101, and 0.151 BAC, to 0.000, 0.020, 0.040, 0.080, and 0.160 BAC; added a test for the presence of acetone; and expanded the definition of alcohol to include other low molecular weight alcohols including methyl or isopropyl. On April 20, 1994, the most recent amendment to the Conforming Products List (CPL) was published (59 FR 18839), identifying those instruments found to conform with the Model Specifications.

Since the last publication of the CPL, five (5) instruments have been evaluated and found to meet the model specifications, as amended on September 17, 1993, for mobile and non-mobile use. They are: CMI, Inc.'s ''Intoxilyzer 5000 (CAL DOJ)'' and ''Intoxilyzer 400'' (which is identical to Lion Laboratories of Cardiff, Wales, UK ''Alcometer 400'' that will also be listed); Intoximeters, Inc.'s ''Portable Intox EC-IR;'' National Draeger's ''Breathalyzer 7410–II''; Sound-Off, Inc.'s ''AlcoData'' (which is identical to the ''Alcohol Detection System-A.D.S. 500'' sold by Gall's Inc. of Lexington, KY that will also be listed). CMI, Inc.'s Intoxilyzer Model 200D has also been added to the CPL. NHTSA has determined that testing is not required for this instrument. The changes from the Model 200 to the Model 200D were determined not to affect precision and accuracy of the device. Similarly, the agency has determined that differences between CMI's Intoxilyzer 5000 (CAL DOJ) and the Intoxilyzer 5000, 5000 (with Cal vapor recirc.), 5000 (w/ 3/8 ID hose option), as well as the 5000 (CAL DOJ) do not affect precision or accuracy. Accordingly, NHTSA has determined that additional testing is not required for these instruments. These devices have been added to the CPL. Finally, the agency has determined that the ''BAC DataMaster-Transportable'' made by National Patent Analytical Systems, Inc. of Mansfield, OH is no longer manufactured, and the manufacturer reports that no devices are in use. Therefore, the ''BAC DataMaster-Transportable'' has been removed from the CPL.

In accordance with the foregoing, the CPL is therefore amended, as set forth below.

CONFORMING PRODUCTS LIST OF EVIDENTIAL BREATH MEASUREMENT DEVICES

Manufacturer and model	Mobile	Nonmobile
Alcohol Countermeasures System, Inc., Port Huron, MI:		
Alert J3AD*	X	X
BAC Systems, Inc., Ontario, Canada:		
Breath Analysis Computer*	X	
CAMEC Ltd., North Shields, Tyne and Ware, England:		
IR Breath Analyzer*	X	X
CMI, Inc., Owensboro, KY:		
Intoxilyzer Model:		
200	X	X
200D	X	X
400	X	X
1400	X	X
4011*	X	X
4011A*	X	X
4011AS*	X	X
4011AS–A*	X	X
4011AS–AQ*	X	X
4011 AW*	X	X
4011A27–10100*	X	X
4011A27–10100 with filter*	X	X
5000	X	X
5000 (w/Cal. Vapor Re-Circ.)	X	X
5000 (w/3/8″ ID Hose option)	X	X
5000CD	X	X
5000CD/FG5	X	X
5000 (CAL DOJ)	X	X

CONFORMING PRODUCTS LIST OF EVIDENTIAL BREATH MEASUREMENT DEVICES—Continued

Manufacturer and model	Mobile	Nonmobile
5000VA	X	X
PAC 1200*	X	X
S–D2	X	X
Decator Electronics, Decator, IL:		
Alco-Tector model 500*		X
Gall's Inc., Lexington, KY:		
Alcohol Detection System–A.D.S. 500	X	X
Intoximeters, Inc., St. Louis, MO:		
Photo Electric Intoximeter*		X
GC Intoximeter MK II*	X	X
GC Intoximeter MK IV*	X	X
Auto Intoximeter*	X	X
Intoximeter Model:		
3000*	X	X
3000 (rev B1)*	X	X
3000 (rev B2)*	X	X
3000 (rev B2A)*	X	X
3000 (rev B2A) w/FM option*	X	X
3000 (Fuel Cell)*	X	X
3000 D*	X	X
3000 DFC*	X	X
Alcomonitor		X
Alcomonitor CC	X	X
Alco-Sensor III	X	X
Alco-Sensor IV	X	X
RBT III	X	X
RBT III–A	X	X
RBT IV	X	X
Intox EC–IR	X	X
Portable Intox EC–IR	X	X
Komyo Kitagawa, Kogyo, K.K.:		
Alcolyzer DPA–2*	X	X
Breath Alcohol Meter PAM 101B*	X	X
Life-Loc, Inc., Wheat Ridge, CO:		
PBA 3000B	X	X
PBA 3000–P*	X	X
Lion Laboratories, Ltd., Cardiff, Wales, UK:		
Alcolmeter Model:		
400	X	X
AE–D1*	X	X
SD–2*	X	X
EBA*	X	X
Auto-Alcolmeter*		X
Luckey Laboratories, San Bernadino, CA:		
Alco-Analyzer Model:		
1000*		X
2000*		X
National Draeger, Inc., Durango, CO:		
Alcotest Model:		
7010*	X	X
7110*	X	X
7410	X	X
Breathalyzer Model:		
900*	X	X
900A*	X	X
900BG*	X	X
7410	X	X
7410–II	X	X
National Patent Analytical Systems, Inc., Mansfield, OH:		
BAC DataMaster	X	X
Omicron Systems, Palo Alto, CA:		
Intoxilyzer Model:		
4011*	X	X
4011AW*	X	X
Plus 4 Engineering, Minturn, CO:		
5000 Plus4*	X	X
Siemans-Allis, Cherry Hill, NJ:		
Alcomat*	X	X
Alcomat F*	X	X
Smith and Wesson Electronics, Springfield, MA:		
Breathalyzer Model:		
900*	X	X

CONFORMING PRODUCTS LIST OF EVIDENTIAL BREATH MEASUREMENT DEVICES—Continued

Manufacturer and model	Mobile	Nonmobile
900A*	X	X
1000*	X	X
2000*	X	X
2000 (non-Humidity Sensor)*	X	X
Sound-Off, Inc., Hudsonville, MI:		
AlcoData	X	X
Stephenson Corp.:		
Breathalyzer 900*	X	X
U.S. Alcohol Testing, Inc./Protection Devices, Inc., Rancho Cucamonga, CA:		
Alco-Analyzer 1000		X
Alco-Analyzer 2000		X
Alco-Analyzer 2100	X	X
Verax Systems, Inc., Fairport, NY:		
BAC Verifier*	X	X
BAC Verifier Datamaster*	X	X
BAC Verifier Datamaster II*	X	X

* Instruments marked with an asterisk (*) meet the Model Specifications detailed in 49 FR 48854 (December 14, 1984) (i.e., instruments tested at 0.000, 0.050, 0.101, and 0.151 BAC.) Instruments not marked with an asterisk meet the Model Specifications detailed in 58 FR 48705 (September 17, 1993), and were tested at BACs = 0.000, 0.020, 0.040, 0.080, and 0.160.

(23 U.S.C. 402; delegations of authority at 49 CFR 1.50 and 501.1)

Michael B. Brownlee,

Associate Administrator for Traffic Safety Programs.

[FR Doc. 95–6519 Filed 3–15–95; 8:45 am]

BILLING CODE 4910–59–P

Research and Special Programs Administration

Office of Hazardous Materials Safety

Notice of Applications for Exemptions

AGENCY: Research and Special Programs Administration, DOT.

ACTION: List of Applicants for Exemptions.

SUMMARY: In accordance with the procedures governing the application for, and the processing of, exemptions from the Department of Transportation's Hazardous Materials Regulations (49 CFR Part 107, Subpart B), notice is hereby given that the Office of Hazardous Materials Safety has received the applications described herein. Each mode of transportation for which a particular exemption is requested is indicated by a number in the ''Nature of Application'' portion of the table below as follows: 1—Motor vehicle, 2—Rail freight, 3—Cargo vessel, 4—Cargo aircraft only, 5—Passenger-carrying aircraft.

DATES: Comments must be received on or before (30 days after publication).

ADDRESS COMMENTS TO: Dockets Unit, Research and Special Programs Administration, U.S. Department of Transportation, Washington, DC 20590.

Comments should refer to the application number and be submitted in triplicate. If confirmation of receipt of comments is desired, include a self-addressed stamped postcard showing the exemption application number.

FOR FURTHER INFORMATION CONTACT:

Copies of the applications are available for inspection in the Dockets Unit, Room 8426, Nassif Building, 400 7th Street, SW, Washington, DC.

NEW EXEMPTIONS

Application No.	Applicant	Regulation(s) affected	Nature of exemption thereof
11409–N	Pure Solve, Inc., Irving, TX	49 CFR 173.28(b)(2)	To authorize the transportation of combustible liquids, n.o.s. Class 3, in DOT–1A2 drums that are exempted from retesting criteria. (Mode 1).
11411–N	National Propane Gas Association, Arlington, VA.	49 CFR 173.315(j)	To authorize the transportation in commerce of more than 5 percent of propane to be transported in non-DOT specification consumer tanks. (Mode 1.)
11413–N	Dow Chemical, NA, Midland, MI	49 CFR 173.314 Note 23	To authorize the transportation in commerce of methyl chloride, Division 2.1, in DOT 105A500W tank cars built after August 31, 1981 equipped with modified excess flow check valves. (Mode 2.)
11414–N	FIBA Compressed Gas Equipment, Westboro, MA.	49 CFR 173.304(a)(2)	To authorize the transportation in commerce of perfluoromethylvinyl ether, Division 2.1, in DOT–3AAX 1800 tubes or higher in manifolded condition. (Modes 1, 3.)
11415–N	Aldrich Chemical Co., Inc., Milwaukee, WI.	49 CFR 172.101(c)(13), 173.224(b).	To authorize the transportation of small quantities of 2,2-Azodi (isobutyronitrile) (AIBN) without temperature control when described as, and otherwise in conformance with the requirements applicable to, a ''Self-reactive solid type C'' in specially designed packaging, (Modes 1, 2, 4, 5.)

NEW EXEMPTIONS—Continued

Application No.	Applicant	Regulation(s) affected	Nature of exemption thereof
11416–N	U.S. Enrichment Corp., Bethesda, MD.	49 CFR 172.302(c), 173.420	To authorize the transportation in commerce of 1S and 2S sample containers manufactured without ASME code stamp for use in transporting uranium hexafluoride, Class 7. (Modes 1, 4, 5.)
11417–N	Essex Cryogenics of Missouri, Inc., St. Louis, MO.	49 CFR 178.57–8C	To authorize the manufacture, mark and sale of non-DOT specification cylinders built to DOT–4L Specification except for the total heat transfer requirement as part of a unit structurally mounted to an ambulance previously reserved for high pressure gaseous oxygen containers. (Mode 1.)
11421–N	EOG Environmental, Inc., Milwaukee, WI.	49 CFR 177.848(d)	To authorize the transportation in commerce of labpacks containing spontaneously combustible materials, Division 4.2, with lab packs containing acids and corrosive liquids, Class 8. (Mode 1.)
11422–N	EOG Environmental, Inc., Milwaukee, WI.	49 CFR 177.848, 177.848(d)	To authorize the transportation in commerce of labpacks containing PIH, Zone A, Division 6.1 with other hazard classes in the same transport vehicle. (Mode 1.)
11423–N	EOG Environmental, Inc., Milwaukee, WI.	49 CFR 177.848(d)	To authorize the transportation in commerce of Poisonous Gases, Zone A, with material of other hazard classes in the same transport vehicle. (Mode 1.)
11424–N	Midwest Corporate Air, Inc., Bellefontaine, OH.	49 CFR 107, Subpart B, 172.101, 172.204(c)(3), 173.27, 175.30(a)(1).	To authorize the transportation of Division 1.1,1.2,1.3 and 1.4 explosives which are forbidden or exceed quantities authorized. (Mode 4.)
11425–N	Hoechst Celanese, Charlotte, NC.	49 CFR 177.834(i)(3)	To authorize diemthyl terephthalate, Class 9, filled cargo tanks to be loaded or unloaded without the physical presence of an unloader. (Mode 1.)
11426–N	Laidlaw Environmental Services Inc., LaPorte, TX.	49 CFR 177.848(d)	To authorize the transport, loading and storage of Division 4.2 hazardous wastes in non-bulk and bulk packages on the same transport vehicle with Class 8 liquid hazardous materials. (Mode 1.)
11427–N	Georgia Gulf Corp., Plaquemine, LA.	49 CFR 179.201–1, 179.201–7	To authorize the transportation of safety vent rupture discs rated higher than 60 psig burst pressure on DOT 111A60W1 tank cars in sodium hydroxide solution service. (Mode 2.)
11428–N	Albemarle Corp., Baton Rouge, LA.	49 CFR 172.101, Footnote B14	To authorize the transportation in commerce of methyl bromide, Division 3, Poison, Gas, PIH Zone C in uninsulated DOT Specification 51 ISO tanks. (Mode 2.)
11430	Sachs Automotive of America, Troy, MI.		To authorize the manufacture, mark and sale of shock absorbers containing either compressed nitrogen gas or compressed air, regardless of internal pressure to be transported without shipping papers and labels. (Modes 1, 2, 3, 4, 5.)

This notice of receipt of applications for new exemptions is published in accordance with Part 107 of the Hazardous Materials Transportations Act (49 U.S.C. 1806; 49 CFR 1.53(e)).

Issued in Washington, DC, on March 10, 1995.

J. Suzanne Hedgepeth,

Chief, Exemption Programs, Office of Hazardous Materials Exemptions and Approvals.

[FR Doc. 95–6479 Filed 3–15–95; 8:45 am]

BILLING CODE 4910–06–M

Office of Hazardous Materials Safety

Notice of Applications for Modifications of Exemptions or Applications To Become a Party to an Exemption

AGENCY: Research and Special Programs Administration, DOT.

ACTION: List of Applications for Modification of Exemptions or Applications to Become a Party to an Exemption.

SUMMARY: In accordance with the procedures governing the application for, and the processing of, exemptions from the Department of Transportation's Hazardous Materials Regulations (49 CFR Part 107, Subpart B), notice is hereby given that the Office of Hazardous Materials Safety has received the applications described herein. This notice is abbreviated to expedite docketing and public notice. Because the sections affected, modes of transportation, and the nature of application have been shown in earlier Federal Register publications, they are not repeated here. Requests for modifications of exemptions (e.g. to provide for additional hazardous materials, packaging design changes, additional mode of transportation, etc.) are described in footnotes to the application number. Application numbers with the suffix ''M'' denote a modification request. Application numbers with the suffix ''P'' denote a party to request. These applications have been separated from the new applications for exemptions to facilitate procession.

DATES: Comments must be received on or before (15 days after publication).

ADDRESS COMMENTS TO: Dockets Unit, Research and Special Programs, Administration, U.S. Department of Transportation, Washington, DC 20590.

Comments should refer to the application number and be submitted in triplicate. If confirmation of receipt of comments is desired, include a self-addressed stamped postcard showing the exemption number.

FOR FURTHER INFORMATION CONTACT:

Copies of the applications are available for inspection in the Dockets Unit, Room 8426, Nassif Building, 400 7th Street SW., Washington, DC.

Application No.	Applicant	Renewal of exemption
8958–M	AeroTech, Inc., Las Vegas, NV [1].	8958
9723–M	Advanced Environmental Tech. Corp., Flanders, NJ [2].	9723
10997–M	HR Textron Inc., Pacoima, CA [3].	10997
11215–M	Orbital Sciences Corp., Dulles, VA [4].	11215
11267–M	The Univ. of New Mexico, Albuquerque, NM [5].	11267
11379–M	TRW Vehicle Safety Systems, Incorporated, Washington, MI [6].	11379

[1] To modify exemption to provide for the transportation in commerce of black powder pellets in UN4G boxes.

[2] To modify exemption to authorize the transportation of cyanides and cyanide mixtures in UN1A2 or UN1B2 metal drums, UN1D plywood drums or UN1G fiber drum or UN1H2 plastic drums.

[3] To modify exemption to authorize the manufacture, mark and sale of non-DOT specification reusable cylinders having a 50 cubic inch maximum water capacity constructed of titanium alloy and built to requirements of DOT-Specification 3HT for use in transporting nitrogen or mixture classed as Division 2.2.

[4] To modify exemption to provide for design changes to pegasus XL three stage winged solid fuel rocket in captive carry launch (CCL) configuration secured beneath a McDonnell Douglas L–1011 (L–1011) aircraft.

[5] To modify the exemption to provide for the transportation of a Space Nuclear Power system (Topaz II), without external insulation to be shipped in a specially designed transport container and provide for a Division 1.D material.

[6] To reissue and modify an exemption originally issued on an emergency basis to authorize the shipment of vehicle safety systems (modules) containing a non-DOT specification high pressure cylinder charged with a hydrogen/air mixture, classed as a Division 2.1. material.

Application No	Applicant	Parties to exemption
4453–P	Conex, Inc; Derby, IN	4453
5022–P	U.S. Department of Energy, Washington, DC.	5022
5704–P	Diablo Transportation, Inc., Byron, CA.	5704
6691–P	Coastal Welding Supply, Inc., Liberty, TX.	6691
7887–P	Kodson Enterprises of Ventura, CA; Fort Worth, TX.	7887
8009–P	Gas Trans, Austin, TX.	8009
8451–P	Diablo Transportation, Inc., Byron, CA.	8451
8453–P	Bishop Brothers Hauling, Inc., Jasper, AL.	8453
9723–P	Cyn Environmental Services, South Boston, MA.	9723
9723–P	Diablo Transportation, Inc., Byron, CA.	9723
9769–P	Diablo Transportation, Inc., Byron, CA.	9769
10001–P	Badger Welding Supplies, Inc., Madison, WI.	10001
10184–P	Liquid Carbonic Industries Corp., Oak Brook, IL.	10184
10239–P	Cabot Corporation, Tuscola, IL.	10239
10441–P	SET Environmental, Inc., Wheeling, IL.	10441
10441–P	Laidlaw Environmental Services, Inc., Columbia, SC.	10441
10898–P	Hydradyne, Inc., Elk Grove, IL.	10898
10898–P	Flodyne, Inc., Elk Grove, IL.	10898
10898–P	KMF Manufacturing, Elk Grove Village, IL.	10898
10933–P	SET Environmental, Inc., Wheeling, IL.	10933
10933–P	Diablo Transportation, Inc., Byron, CA.	10933
10987–P	BOC Gases, Murray Hill, NJ.	10987
11043–P	J.B. Hunt Special Commodities, Inc., Lowell, AR.	11043
11043–P	S&W Waste, Inc., South Kearny, NJ.	11043
11043–P	SET Environmental, Inc., Wheeling, IL.	11043
11156–P	Ladshaw Explosives, Inc., New Braunfels, TX.	11156
11156–P	Brandywine Explosives & Supply, Inc., Paris, KY.	11156
11156–P	Strawn Explosives, Inc., Euless, TX.	11156
11156–p	Rock Work, Inc., Blue Bell, PA.	11156
11254–P	Directional Wireline Services, Inc., Lake Charles, LA.	11254

DEPARTMENT OF THE TREASURY

U.S. Customs Service

Public Meetings in Norfolk and Los Angeles on AES Implementation Phase I

AGENCY: U.S. Customs Service, Department of the Treasury.

ACTION: Notice of public meetings.

The U.S. Customs Service, Automated Export System Development Team announces the following public meetings:

DATES: Norfolk, VA., Friday, March 24, 1995, commencing at 9:00 a.m. and Los Angeles, CA, Friday, March 31, 1995, commencing at 9:00 a.m. and 1:00 p.m.

ADDRESSES: Norfolk, VA; Norfolk International Terminal, Warehouse #4, Building C—Training Room, Terminal Boulevard, Norfolk, VA 23518

Los Angeles, CA; Port of Los Angeles Building, Board Room—2nd Floor, 425 South Palos Verdes Street, San Pedro, CA 90733

FOR FURTHER INFORMATION CONTACT: Norfolk Meeting: Mr. Paul Somers, (804) 441–6731; Pre-registration Fax: (804) 441–6630

Los Angeles Meeting: Ms. Mary Curcio, (310) 514–6962; Pre-registration Fax: (310) 514–6090

SUPPLEMENTARY INFORMATION: U.S. Customs Commissioner George J. Weise has announced that Phase 1 of the Automated Export System (AES) will be implemented at the ports of Baltimore; Norfolk; Houston; Charleston, South Carolina and Long Beach, California. Implementation is scheduled for July 1995.

AES is a joint venture between Customs and the Bureau of Census. The system is designed to electronically gather export-related information from both exporters and carriers prior to actual exportation.

A major goal of AES is to improve the accuracy of export trade statistics, which are used as a primary economic indicator. Eventually, AES will replace numerous paper and electronic mechanisms for filing Shipper's Export Declarations (SED's). AES will also enhance collection of the Harbor Maintenance Fee on exports, which is expected to return $60 to $80 million to the U.S. Treasury annually.

Customs, Treasury's lead agency for international trade issues, started AES development in May 1994. The AES team has been working closely with a Trade Resource Group comprised of members from export-related industries.

In this document, Customs is announcing the following public meetings on AES:

1. Norfolk, Virginia—March 24, 1995, commencing at 9:00 a.m., Norfolk International Terminal, Warehouse #4, Building C—Training Room, Terminal Boulevard, Norfolk, VA 23518, Point of Contact: Mr. Paul Somers (804) 441–6731, Pre-registration fax number: (804) 441–6630.

2. Los Angeles, California—March 31, 1995, commencing at 9:00 a.m. and 1:00 p.m., Port of Los Angeles Building, Board Room–2nd Floor, 425 South Palos Verdes Street, San Pedro, California 90733, Point of Contact: Ms. Mary Curcio (310) 514–6962, Pre-registration fax number: (310) 514–6090.

Additional public meetings on AES Implementation Phase I are planned for the following locations; Houston, Texas, April 19, 1995, and Charleston, South Carolina, April 4 or 5, 1995. Appropriate notice will be published in the **Federal Register** when the dates, times and specific locations for these meetings have been finalized.

Dated: March 10, 1995.

Sharon A. Mazur,

Director, AES Development Team.

[FR Doc. 95–6458 Filed 3–15–95; 8:45 am]

BILLING CODE 4820–02–P

Internal Revenue Service

Art Advisory Panel of the Commissioner of Internal Revenue Availability of Report of 1994 Closed Meetings

AGENCY: Internal Revenue Service, Treasury.

ACTION: Notice of availability of report on closed meetings of the Art Advisory Panel.

SUMMARY: The report is now available.

Pursuant to 5 U.S.C. app. I section 10(d), of the Federal Advisory Committee Act; and 5 U.S.C. section 552b, the Government in the Sunshine Act; and Treasury Directive 21–03 section 8 (1–29–87): A report summarizing the closed meeting activities of the Art Advisory Panel during 1994, has been prepared. A copy of this report has been filed with the Assistant Secretary of the Treasury for Management and is now available for public inspection at: Internal Revenue Service, Freedom of Information Reading Room, Room 1565, 1111 Constitution Avenue, NW., Washington, DC 20224.

Requests for copies should be addressed to: Director, Disclosure Operations Division, Attn: FOI Reading Room, Box 388, Benjamin Franklin Station, Washington, DC 20224, Telephone (202) 622–5164 (Not a toll free telephone number).

The Commissioner of Internal Revenue has determined that this document is not a major rule as defined in Executive Order 12866 and that a regulatory impact analysis therefore is not required. Neither does this document constitute a rule subject to the Regulatory Flexibility Act (5 U.S.C. chapter 6).

For further information contact: Karen Carolan, CC:AP:AS:4, 901 D Street, SW., Room 224, Washington, DC 20024, Telephone (202) 401–4128 (Not a toll free telephone number).

Margaret Milner Richardson,

Commissioner of Internal Revenue.

[FR Doc. 95–6437 Filed 3–15–95; 8:45 am]

BILLING CODE 4830–01–U

Office of Thrift Supervision

Carteret Federal Savings Bank; Notice of Replacement of Conservator With a Receiver

Notice is hereby given that, pursuant to the authority contained in subdivision (C) of § 5(d)(2) of the Home Owners' Loan Act, the Office of Thrift Supervision duly replaced the Resolution Trust Corporation as Conservator for Carteret Federal Savings Bank, Madison, New Jersey (''Association''), with the Resolution Trust Corporation as sole Receiver for the Association on March 10, 1995.

Dated: March 13, 1995.

By the Office of Thrift Supervision.

Nadine Y. Washington,

Corporate Secretary.

[FR Doc. 95–6532 Filed 3–15–95; 8:45 am]

BILLING CODE 6720–01–M

UNITED STATES INFORMATION AGENCY

Professional Development of African Radio Station Owners and Managers

ACTION: Notice; request for proposals.

SUMMARY: The Office of Citizen Exchanges of the United States Information Agency's Bureau of Education and Cultural Affairs announces an open competition for an assistance award. Public or private non-profit organizations meeting the provisions described in IRS regulation 501(c)(3) may apply to develop two-way exchange projects for radio station owners and managers in selected African countries. The Office proposes development of two separate projects focused on radio station management: (a) One project for francophone African participants; and (b) one project for anglophone African participants. Applicants may submit proposals to develop one or both projects. The projects should enhance participants' skills in managing their broadcasting operations and assist them to develop effective business management strategies. Each project should provide U.S.-based activities for approximately 9–12 African radio station owners and managers. Each project also should provide in-country workshops or consultancies to assist participating broadcasters implement appropriate business management practices. The projects should begin in fall 1995. Applicants are encouraged to consult with the U.S. Information Service (USIS) posts in participating countries in the development of the project proposals.

Overall grant making authority for this program is contained in the Mutual Educational and Cultural Exchange Act of 1961, Public Law 87–256, as amended, also known as the Fulbright-Hays Act. The purpose of the Act is ''to enable the Government of the United States to increase mutual understanding between the people of the United States and the people of other countries * * *; to strengthen the ties which unite us with other nations by demonstrating the educational and cultural interests, developments, and achievements of the people of the United States and other nations * * * and thus to assist in the development of friendly, sympathetic and peaceful relations between the United States and the other countries of the world.''

Programs and projects must conform with Agency requirements and guidelines outlined in the Solicitation Package. USIA projects and programs are subject to the availability of funds.

ANNOUNCEMENT NAME AND NUMBER: All communications with USIA concerning this announcement should refer to the above title and reference number E/P–95–50.

DATES: *Deadline for proposals:* All copies must be received at the U.S. Information Agency by 5 p.m. Washington, D.C. time on Friday, May 12, 1995. Faxed documents will not be accepted, nor will documents postmarked on May 12, 1995, but received at a later date. It is the responsibility of each applicant to ensure that proposals are received by the above deadline.

FOR FURTHER INFORMATION CONTACT: The Africa/Near East/South Asia Division of

the Office of Citizen Exchanges, U.S. Information Agency, 301 4th Street, SW., Room 220, Washington, DC 20547, tel. 202–619–5319, fax 202–619–4350, Internet address STAYLOR@USIA.GOV, to request a Solicitation Package, which includes more detailed award criteria; all application forms; and guidelines for preparing proposals, including specific criteria for preparation of the proposal budget. Please specify USIA Program Officer Stephen Taylor on all inquiries and correspondences. Interested applicants should read the complete **Federal Register** announcement before addressing inquiries to the Office of Citizen Exchanges or submitting their proposals. Once the RFP deadline has passed, the Office of Citizen Exchanges may not discuss this competition in any way with applicants until the Bureau proposal review process has been completed.

ADDRESSES: Applicants must follow all instructions provided in the Solicitation Package and send fully completed applications. Send the original and 14 copies to: U.S. Information Agency, Ref.: E/P–95–50, Office of Grants Management, E/XE, Room 336, 301 4th Street, SW., Washington, DC 20547.

SUPPLEMENTARY INFORMATION: Pursuant to the Bureau's authorizing legislation, programs must maintain a non-political character and should be balanced and representative of the diversity of American political, social, and cultural life. ''Diversity'' should be interpreted in the broadest sense and encompass differences including but not limited to race, gender, religion, geographic location, socio-economic status, and physical challenges. Applicants are strongly encouraged to adhere to the advancement of this principle.

Overview

Background

Several African governments have adopted policies which, in some cases, have promoted development of new, independent radio stations, and in other cases have sparked interest in commercializing state-run radio services. The democratic transition in Mali brought greater press freedoms, and today some nineteen independent radio stations are on the air. Tanzania and Niger recently began issuing broadcasting licenses. In Niger, two private radio stations are on the air and more than a dozen prospective broadcasters have received licenses. While these station owners and managers are enthusiastic and devoted, most have little or no management experience and many of their staff are untrained. High operating costs are a constant threat to their survival. In countries such as Zimbabwe, Zambia and Malawi, governments are looking to commercialize their state-run radios to boost revenues and reduce reliance on state funding. Radio managers in these and other countries could benefit from a project offering strategies to enhance the viability and overall management of their stations.

Program Overview

The Office of Citizen Exchanges (E/P) proposes development of two projects for African participants to promote development of business management skills applicable to radio broadcasting. One project will be designed for participants in selected anglophone African countries. The second project will target selected francophone countries. Each two-way exchange should include activities for 9–12 participants in the United States and opportunities for American specialists to share their expertise during in-country activities in Africa. While the projects should introduce participants to a variety of radio broadcasting management practices, the programs should concentrate on activities and site visits appropriate to the technology and infrastructure available in Africa. The projects should be designed to accommodate participants new to broadcasting management, and sufficiently flexible to assist independent stations as well as state-run services considering commercializing or enhancing overall management. Participants should study station management practices, business planning strategies and marketing concepts. They also should receive an overview of professional journalism standards which managers must oversee and identify strategies to promote staff development.

These two-way exchange projects also should create new relationships, opening channels of communication between U.S. and African broadcasters. These ties ideally should assist continued improvement of station management practices and enhance the viability of independent radio broadcasting in Africa. The projects should begin in fall 1995.

Project Objectives

Each two-way exchange project should be designed to:

—Introduce participants to fundamental business management skills applicable to station management, including financial planning, cash management and staff development;
—Analyze income resources for radio stations, including advertisements, and examine strategies for surviving the initial stages of launching a new broadcasting service;
—Examine marketing strategies aimed at attracting advertisers and, where appropriate, study the interrelationship among programming content, objective news reporting and maintaining advertisers as clients;
—Develop strategies for implementing improved station management practices;
—Examine media-government relations and demonstrate how the independent reporting of political and economic developments helps shape government policy and public opinion;
—Provide an overview of journalistic ethics and the standards of professional journalism; and
—Establish linkages between African station owners and managers, and their U.S. counterparts, providing a resource for continued professional development.

Participants

The participants will be owners and managers of radio stations in selected African countries. The anglophone project should be designed for participants from Malawi, Tanzania, Zambia and Zimbabwe. All participants will have strong English language skills. The francophone project should be designed for participants from Mali, Niger, Senegal and Burkina Faso. For this project, two U.S. State Department interpreters and one escort officer will be available for U.S.-based activities. For the program phases in Africa, the grantee institution will select the American presenters in consultation with USIA. Presenters conducting activities in francophone Africa should be French-fluent. The U.S. Phase of each project should be designed for 9–12 participants. USIS personnel in the participating countries will select the participants, although recommendations from the grantee institution are welcome.

USIS offices will facilitate the issuance of visas for the African participants and can help with the distribution of program-related materials in participating countries.

Programmatic Considerations

USIA will give careful consideration to proposals which demonstrate:

(1) In-depth, substantive knowledge of the strategies and practices involved in managing a broadcasting operation as a successful business enterprise;

(2) First-hand connections with a variety of American radio operations, as well as public and private sector

organizations responsible for promoting journalistic professionalism and successful business management;

(3) The capacity to organize and manage international exchange programs, including the handling of pre-departure arrangements, orientation activities, monitoring and problem-solving involved in such programs.

USIA is especially interested in multi-phase programs in which the phases build on one another and lay the groundwork for new and long-term relationships between American and African professionals. Proposals which are overly ambitious and those which are very general in nature will not be competitive. The Office of Citizen Exchanges does not award grants to support projects whose focus is limited to technical matters, or to support scholarly research projects, development of publications for dissemination in the United States, individual student exchanges, film festivals or exhibits. The Office of Citizen Exchanges does not provide scholarships or support for long-term (one semester or more) academic studies. Competitions sponsored by other Bureau offices also are announced in the **Federal Register** and may have different application requirements as well as different objectives.

Program Suggestions

Each project should include at least one phase for African participants in the United States and at least one phase for American specialists in Africa. Programming elements might include in-country workshops or seminars led by American experts, specialized on-site consultancies developed for radio station owners in Africa, a study tour in the United States for selected African participants, and U.S.-based professional attachments for African broadcasters. A planning visit overseas by the American organizer also could be considered if crucial to successful development and implementation of the program.

The project should include formats which maximize interaction between the participants and the program presenters. Participants should observe the full range of business management and financial planning activities on the part of radio station owners and managers. They might also observe the interaction of station owners with public and private sector organizations involved in formulating, implementing and evaluating policies that affect U.S. broadcasting, such as professional associations, advertising agencies, trade unions, government agencies, and community groups. Participants also might visit university-based radio stations to observe training programs and study the role of such stations in the broadcasting industry. The program design should provide adequate time for participants to meet individually with American professionals who have similar interests and specializations. While not required, the presenters' familiarity with radio broadcasting in the participating countries is desirable .

Program Responsibilities

The grantee institution's responsibilities include: Selecting presenters, themes and topics for discussion; organizing a coherent progression of activities; providing any support materials; providing all travel arrangements, lodging and other logistical arrangements for the visiting African participants and the U.S. presenters who travel to Africa; and overseeing the project on a daily basis to achieve maximum program effectiveness. The grantee institution is responsible for coordinating plans and project implementation with E/P, USIS officers in the participating countries and collaborating African institutions.

At the start of each phase, the grantee institution will conduct an orientation session and, at the conclusion, conduct participant evaluations. The institution will submit a report at the conclusion of each program phase, including a final program report summarizing the entire project and resulting organizational links. The institution must also submit a final financial report. To prepare the participants for their U.S. experience, E/P encourages the grantee organization to forward a set of preliminary materials which might include an introduction to the U.S. system of government, American notions of free speech and freedom of the press, the practices of U.S. broadcasters and other background information about the project. E/P will ask the participants to prepare brief outlines describing their own particular interests in these areas. The grantee institution should brief the American presenters on the participants' backgrounds, interests and concerns.

Other Program Considerations

Consultation with USIS officers in the participating countries in the development of the project proposal is encouraged. Letters of commitment from participating U.S. and African institutions and individuals would enhance a proposal.

USIA also encourages the development of specialized written materials to enhance this professional development program. USIA is interested in organizations' ideas on how to ''reuse'' specialized materials by providing them to universities, libraries or other institutions for use by a larger audience. If not already available, glossaries of specialized terms might be developed. However, please note that, according to current USIA regulations, materials developed with USIA funds may not be distributed in the United States.

The grantee institution should maximize cost-sharing in all elements of the project and seek to stimulate U.S. private sector support, including from foundations and corporations.

All participants will be covered under the terms of a USIA-sponsored health insurance policy. The premium is paid by USIA directly to the insurance company.

Funding

Competition for USIA funding support is keen. Selection of a grantee institution is based on the substantive nature of the program proposal; the applicant's professional capability to carry the program through to a successful conclusion; and cost effectiveness, including in-kind contributions and the ability to keep administrative costs at a minimum. USIA will consider funding up to approximately $145,000 for the francophone project, and up to approximately $135,000 for the anglophone project, but grants awarded to eligible organizations with less that four years of experience in conducting international exchange programs will be limited to $60,000. Grant applicants may submit a proposal to manage both the francophone and anglophone projects, or may submit a proposal to develop only one of these programs. If submitting a proposal for both projects, the applicant should be careful to avoid duplication of costs.

Applicants must submit a comprehensive line item budget for the entire program based on the specific guidance in the Solicitation Package. Applicants must provide a summary budget as well as a break-down reflecting both the administrative budget and the program budget. For further clarification, applicants may provide optional, separate sub-budgets for each program phase or activity in order to facilitate USIA decisions on funding. USIA will consider funding the following costs:

1. International and domestic air fares; visas; transit costs (e.g., airport fees); ground transportation costs.

2. Per diem: For foreign participants during activities in the United States, organizations have the option of using a flat rate of $140/day or the published

Federal Travel Regulations (FTR) per diem rates for individual American cities.

Note: U.S. institutional staff must use the published FTR per diem rates, not the fault rate. For activities overseas, standard Federal Travel Regulations per diem rates must be used.

3. Escort-interpreters: Interpretation for U.S.-based programs (if required) is provided by the State Department's Language Services Division. Typically, delegations ranging from 8–12 participants require two simultaneous interpreters and one escort officer. Grant proposal budgets should contain a flat $140/day per diem rate for each State Department escort/interpreter, as well as home-program-home air fare of $400 per interpreter and any U.S. travel expenses during the program itself. Salary expenses are covered centrally and are not part of the applicant's budget proposal. USIA grants do not pay for foreign interpreters to accompany delegations during travel to or from their home country. Interpreters are not available for U.S.-based internship activities.

4. Book and cultural allowances: Participants are entitled to a one-time book allowance of $50 plus a cultural allowance of $150 per person during programs taking place in the United States. U.S. staff do not receive these benefits. Escort interpreters are reimbursed for actual cultural expenses up to $150.00.

5. Consultants: Consultants may be used to provide specialized expertise or to make presentations. Honoraria generally should not exceed $250/day. Subcontracting organizations may also be used, in which case the written contract(s) should be included in the proposal.

6. Materials development: Proposals may contain costs to purchase, develop and translate materials for participants. USIA reserves the rights to these materials for future use.

7. Room rentals, which generally should not exceed $250/day.

8. One working meal per project, for which per capita costs may not exceed $5–$8 for a lunch or $14–$20 for a dinner. The number of invited guests may not exceed the number of participants by more than a factor of two to one.

9. Return travel allowance: $70 for each participant which is to be used for incidental expenditures incurred during international travel.

10. Other costs necessary for the effective administration of the program, including salaries for grant organization employees, benefits, and other direct and indirect costs per detailed instructions in the application package.

E/P encourages cost-sharing, which may be in the form of allowable direct or indirect costs. E/P would be especially interested in proposals which demonstrate a program vision which goes well beyond that which can be supported by the requested USIA grant and which would try to use a USIA grant to leverage additional funding from other sources to support elements of the broader program plan.

Please refer to the Solicitation Package for complete budget guidelines and formatting instructions.

Review Process

USIA will acknowledge receipt of all proposals and will review them for technical eligibility. Proposals will be deemed ineligible if they do not fully adhere to the guidelines stated herein and in the Solicitation Package. Eligible proposals will be forwarded to panels of USIA officers for advisory review. All eligible proposals will be reviewed by the Agency contracts office, as well as the USIA Office of African Affairs and USIA posts overseas, where appropriate. Proposals may also be reviewed by the Office of the General Counsel or by other Agency elements. Funding decisions are at the discretion of the USIA Associate Director for Educational and Cultural Affairs. Final technical authority for grant awards resides with the USIA grants officer.

Review Criteria

Technically eligible applications will be competitively reviewed according to the criteria stated below. These criteria are not rank ordered and all carry equal weight in the proposal evaluation:

1. *Institutional Reputation and Ability:* Applicant institutions should demonstrate their potential for excellence in program design and implementation and/or provide documentation of successful programs. If an applicant is a previous USIA grant recipient, responsible fiscal management and full compliance with all reporting requirements for past Agency grants as determined by USIA's Office of Contracts will be considered. Relevant substantive evaluations of previous projects may also be considered in this assessment.

2. *Project Personnel:* The thematic and logistical expertise of project personnel should be relevant to the proposed program. Resumes or C.V.s should be summaries which are relevant to the specific proposal and no longer than two pages each.

3. *Program Planning:* A detailed agenda and relevant work plan should demonstrate substantive rigor and logistical capacity.

4. *Thematic Expertise:* Proposals should demonstrate the organization's expertise in the subject area which promises an effective sharing of information.

5. *Support of Diversity:* Proposals should demonstrate the recipient's commitment to promoting the awareness and understanding of diversity.

6. *Cross-Cultural Sensitivity and Area Expertise:* Evidence should be provided of sensitivity to historical, linguistic, religious, and other cross-cultural factors, as well as relevant knowledge of the target geographic area/country.

7. *Ability to Achieve Program Objectives:* Objectives should be realistic and feasible. The proposal should clearly demonstrate how the grantee institution will meet program objectives.

8. *Multiplier Effect:* Proposed programs should strengthen long-term mutual understanding and contribute to maximum sharing of information and establishment of long-term institutional and individual ties.

9. *Cost-Effectiveness:* Overhead and direct administrative costs to USIA should be kept as low as possible. All other items proposed for USIA funding should be necessary and appropriate to achieve the program's objectives.

10. *Cost-Sharing:* Proposals should maximize cost-sharing through other private sector support as well as direct funding contributions and/or in-kind support from the prospective grantee institution and its partners.

11. *Follow-on Activities:* Proposals should provide a plan for continued exchange activity (without USIA support) which ensures that USIA-supported programs are not isolated events.

12. *Project Evaluation:* Proposals should include a plan to evaluate the activity's success, both as the activities unfold and at the end of the program. USIA recommends that the proposal include a draft survey questionnaire or other technique plus description of a methodology to use to link outcomes to original project objectives. Grantees will be expected to submit intermediate reports after each project component is concluded or quarterly, whichever is less frequent.

Notice

The terms and conditions published in this RFP are binding and may not be modified by any USIA representative. Explanatory information provided by the Agency that contradicts published language will not be binding. Issuance

of the RFP does not constitute an award commitment on the part of the Government. The needs of the program may require the award to be reduced, revised, or increased. Final awards cannot be made until funds have been appropriated by Congress, allocated and committed through internal USIA procedures.

Notification

All applicants will be notified of the results of the review process on or about August 7, 1995. Awards made will be subject to periodic reporting and evaluation requirements.

Dated: March 8, 1995.

Dell Pendergrast,

Deputy Associate Director, Educational and Cultural Affairs.

[FR Doc. 95–6254 Filed 3–15–95; 8:45 am]

BILLING CODE 8230–01–M

OFFICE OF THE UNITED STATES TRADE REPRESENTATIVE

Request for Comments Concerning GATS Basic Telecommunications Negotiations

AGENCY: Office of the United States Trade Representative.

ACTION: Request for comments concerning commitments to be sought in negotiations on basic telecommunications services at the World Trade Organization.

SUMMARY: The Office of the U.S. Trade Representative (USTR) is soliciting public comment on the requests to be made to U.S. negotiating partners in the Negotiating Group on Basic Telecommunications of the General Agreement on Trade in Services (GATS). The GATS is one of the Uruguay Round agreements administered by the World Trade Organization. Interested persons are invited to submit their comments on market-opening commitments that should be sought in the basic telecommunications sector by April 15, 1995.

FOR FURTHER INFORMATION CONTACT: William Corbett, Office of Services, Investment and Intellectual Property, Office of the United States Trade Representative, at (202) 395–4510 or Laura B. Sherman, Office of the General Counsel, Office of the United States Trade Representative, at (202) 395–3150.

SUPPLEMENTARY INFORMATION: The Negotiating Group on Basic Telecommunications (NGBT) was created in April 1994 by the Marrakesh Ministerial Decision. The Decision states that ''negotiations shall be entered into on a voluntary basis with a view to the progressive liberalization of trade in telecommunications transport networks and services within the framework of the General Agreement on Trade in Services'' (GATS). The NGBT is responsible for holding sectoral negotiations on basic telecommunications services; it has a deadline for completing talks by April 30, 1996.

The United States is in the process of preparing requests for market-opening commitments from other countries participating in the NGBT, a list of which is attached. These requests must be submitted by the end of April 1995.

The United States objective in the negotiations is to obtain levels of openness in the telecom markets of other participants equivalent to the level in the United States. Interested persons are invited to submit their comments on market-opening commitments that the United States should request from participating countries. Such commitments may include wire or wireless communications, regulatory schemes, interconnection issues, foreign ownership restrictions, and competition safeguards, among other things.

Comments should be filed no later than April 15, 1995. Comments must be in English and provided in twenty copies to Mr. William Corbett, Office of Services, Investment and Intellectual Property, Office of the United States Trade Representative, 600 17th Street, Washington, D.C. 20506.

Frederick L. Montgomery,

Chairman, Trade Policy Staff Committee.

Countries Involved in the NGBT

Argentina, Australia, Canada, Chile, Cuba, Cyprus, Dominican Republic, France, Germany, Denmark, United Kingdom, Italy, Ireland, Sweden, Austria, Finland, Spain, Greece, Portugal, Netherlands, Luxembourg, Belgium, Egypt, Hong Kong, Hungary, India, Japan, Mauritius, Korea, Mexico, Morocco, New Zealand, Norway, Slovak Republic, Switzerland, Tunisia, Turkey, United States, Brazil, Brunei, China, Chinese Taipei, Colombia, Costa Rica, Czech Republic, Ecuador, El Salvador, Guatemala, Honduras, Iceland, Indonesia, Israel, Jamaica, Madagascar, Malaysia, Mauritius, Nicaragua, Pakistan, Panama, Philippines, Poland, Romania, Russian Federation, Singapore, Slovenia, South Africa, Thailand, Trinidad & Tobago, Uruguay, Venezuela.

[FR Doc. 95–6473 Filed 3–15–95; 8:45 am]

BILLING CODE 3190–01–M

Defense Policy Advisory Committee for Trade

AGENCY: Office of the United States Trade Representative.

ACTION: Notice of closed meeting. The March 29, 1995 meeting of the Defense Policy Advisory Committee for Trade will be closed to the public.

SUMMARY: The meeting will include a review and discussion of current issues which influence U.S. trade policy. Pursuant to Section 2155(f)(2) of Title 19 of the United States Code, I have determined that this meeting will be concerned with matters the disclosure of which would seriously compromise the development by the United States Government of trade policy, priorities, negotiating objectives or bargaining positions with respect to any trade agreements, the operation of any trade agreement and other matters arising in connection with the development, implementation and administration of the trade policy of the United States.

DATES: The meeting is scheduled for March 29, 1995, unless otherwise notified.

ADDRESSES: The meeting will be held at the Pentagon, Arlington, Virginia, unless otherwise notified.

FOR FURTHER INFORMATION CONTACT: Clayton Parker, Director of Intergovernmental Affairs, Office of the United States Trade Representative, Executive Office of the President, (202) 395–6120.

Michael Kantor,

United States Trade Representative.

[FR Doc. 95–6472 Filed 3–15–95; 8:45 am]

BILLING CODE 3190–01–M

Sunshine Act Meetings

Federal Register
Vol. 60, No. 51
Thursday, March 16, 1995

This section of the FEDERAL REGISTER contains notices of meetings published under the "Government in the Sunshine Act" (Pub. L. 94-409) 5 U.S.C. 552b(e)(3).

ASSASSINATION RECORDS REVIEW BOARD

TIME AND DATE: 10:00 a.m., March 24, 1995.

PLACE: Massachusetts State House, Room A–1, Beacon Street, Boston, MA 02133.

STATUS: Open.

MATTERS TO BE CONSIDERED:

1. Testimony on identification and location of assassination records by: Philip H. Melanson, Priscilla Johnson McMillan, Carl Oglesby, Dick Russell, and Richard Trask.
2. Board discussion on finalizing the proposed interpretive regulations published for public comment by the Assassination Records Review Board in the Federal Register on February 8, 1995 (60 FR 7506, Feb. 8, 1995).
3. Update by representative of the National Archives and Records Administration (NARA) on the President John F. Kennedy Assassination Records Collection at NARA.
4. Staff reports on upcoming Board activities.

CONTACT PERSON FOR MORE INFORMATION: Thomas Samoluk, Press and Public Affairs Officer, 600 E Street, NW, Second Floor, Washington, DC 20530. Telephone: (202) 724–0088; Fax: (202) 724–0457.

David G. Marwell,

Executive Director.

[FR Doc. 95–6668 Filed 3–14–95; 2:35 pm]

BILLING CODE 6820–TD–M

BLACKSTONE RIVER VALLEY NATIONAL HERITAGE CORRIDOR COMMISSION

ACTION: Notice of Meeting

Notice of Meeting

Notice is hereby given in accordance with Section 552b of Title 5, United States Code, that a meeting of the Blackstone River Valley National Heritage Corridor Commission will be held on Thursday, March 23, 1995.

The Commission was established pursuant to Public Law 99–647. The purpose of the Commission is to assist federal, state and local authorities in the development and implementation of an integrated resource management plan for those lands and waters within the Corridor.

The meeting will convene at 7:00 p.m. at Rhode Island Historical Society, Aldrich House, 110 Benevolent Street, Providence, RI for the following reasons:

1. Presentation from City of Providence.
2. Report by Woonsocket Ad-hoc Committee.
3. Commission Business.
4. Other.

It is anticipated that about twenty people will be able to attend the session in addition to the Commission members.

Interested persons may make oral or written presentations to the Commission or file written statements. Such requests should be made prior to the meeting to:

James R. Pepper, Executive Director, Blackstone River Valley National Heritage Corridor Commission, One Depot Square, Woonsocket, RI 02895. Tel.: (401) 762–0250

Further information concerning this meeting may be obtained from James R. Pepper, Executive Director of the Commission at the aforementioned address.

Nancy Brittian,

Acting Executive Director.

[FR Doc. 95–6683 Filed 3–14–95; 2:37 pm]

BILLING CODE 4310–70–P

FEDERAL ELECTION COMMISSION

DATE AND TIME: Tuesday, March 21, 1995 at 10:00 a.m.

PLACE: 999 E Street, N.W., Washington, D.C.

STATUS: This meeting will be closed to the public.

ITEMS TO BE DISCUSSED:

Compliance matters pursuant to 2 U.S.C. § 437g.
Audits conducted pursuant to 2 U.S.C. § 437g, § 438(b), and Title 26, U.S.C.
Matters concerning participation in civil actions or proceedings or arbitration
Internal personnel rules and procedures or matters affecting a particular employee

DATE AND TIME: Thursday, March 23, 1995 at 10:00 a.m.

PLACE: 999 E Street, N.W., Washington, D.C. (Ninth Floor).

STATUS: This meeting will be open to the public.

ITEMS TO BE DISCUSSED:

Correction and Approval of Minutes
Advisory Opinion 1994–35: Susan Alter on behalf of Susan Alter for Congress Committee
Advisory Opinion 1994–36: Susan M. Frank for Science Applications International Corporation (SAIC)
Regulations:
MCFL revised draft final rules; Qualified Nonprofit Corporations (11 CFR 114.10)
Administrative Matters.

PERSON TO CONTACT FOR INFORMATION: Mr. Ron Harris, Press Officer, Telephone: (202) 219–4155.

Delores Hardy,

Administrative Assistant.

[FR Doc. 95–6695 Filed 3–14–95; 3:30 pm]

BILLING CODE 6715–01–M

UNITED STATES INTERNATIONAL TRADE COMMISSION

[USITC SE–95–06]

TIME AND DATE: March 30, 1995 at 2:30 p.m.

PLACE: Room 101, 500 E Street S.W., Washington, DC 20436.

STATUS:

1. Agenda for future meeting.
2. Minutes.
3. Ratification List.
4. To consider the adoption of a Strategic Plan for the U.S. International Trade Commission—briefing and vote.
5. Outstanding action jackets: None.

In accordance with Commission policy, subject matter listed above, not disposed of at the scheduled meeting, may be carried over to the agenda of the following meeting.

By order of the Commission:

Issued: March 14, 1995.

Donna R. Koehnke,

Secretary.

[FR Doc. 95–6618 Filed 3–14–95; 2:34 pm]

BILLING CODE 7020–02–P

NATIONAL SCIENCE FOUNDATION

National Science Board

DATE AND TIME:

March 23, 1995, 9:30 a.m. Closed Session
March 23, 1995, 3:30 p.m. Open Session
March 24, 1995, 9:00 a.m. Closed Session

PLACE: National Science Foundation, 4201 Wilson Boulevard, Room 1235, Arlington, Virginia 22230.

STATUS:

Part of this meeting will be open to the public.
Part of this meeting will be closed to the public.

MATTERS TO BE CONSIDERED:

Thursday, March 23, 1995

Closed Session (9:30 a.m.–11:30 a.m.)

—Minutes, February Meeting
—NSF Budget

Thursday, March 23, 1995

Open Session (3:30 p.m.–5:00 p.m.)

—Presentation: Return on Investment in Basic Research
—Minutes, February Meeting
—Closed Session Agenda Items for May Meeting
—Chairman's Report
—Director's Report
—NSB Committee Structure
—Reports from Committees

Friday, March 24, 1995

Closed Session (9:00 a.m.–11:00 a.m.)

—Vannevar Bush Award
—Alan T. Waterman Award
—NSF Budget
—Other Business/Adjourn

Marta Cehelsky,

Executive Officer.

[FR Doc. 95–6672 Filed 3–14–95; 2:36 pm]

BILLING CODE 7555–01–M

federal register

Thursday
March 16, 1995

Part II

Environmental Protection Agency

40 CFR Parts 281 and 282

Hazardous Waste: Final Approval of State Underground Storage Tank Programs in South Dakota; Final Rules

ENVIRONMENTAL PROTECTION AGENCY

40 CFR Part 281

[FRL–5167–6]

South Dakota; Final Approval of State Underground Storage Tank Program

AGENCY: Environmental Protection Agency.

ACTION: Notice of final determination on State of South Dakota's application for final approval.

SUMMARY: The State of South Dakota has applied for final approval of its underground storage tank program under Subtitle I of the Resource Conservation and Recovery Act (RCRA). The Environmental Protection Agency (EPA) has reviewed the South Dakota application and has reached a final determination that South Dakota's underground storage tank program satisfies all of the requirements necessary to qualify for final approval. Thus, EPA is granting final approval to South Dakota to operate its program in lieu of the federal program.

EFFECTIVE DATE: Final approval for South Dakota shall be effective at 1:00 pm Eastern Time on May 15, 1995.

FOR FURTHER INFORMATION CONTACT: Leslie Zawacki, Underground Storage Tank Program Section, U.S. EPA, Region 8, 8HWM–WM, 999 18th Street, Denver, Colorado 80202, phone: (303) 293–1665.

SUPPLEMENTARY INFORMATION:

A. Background

Section 9004 of the Resource Conservation and Recovery Act (RCRA) enables EPA to approve state underground storage tank programs to operate in the State in lieu of the Federal underground storage tank (UST) program. Program approval is granted by EPA if the Agency finds that the State program: (1) Is ''no less stringent'' than the Federal program in all seven elements, and includes notification requirements of section 9004(a)(8), 42 U.S.C. 6991c(a) (8); and (2) provides for adequate enforcement of compliance with UST standards (section 9004(a), 42 U.S.C. 6991c(a)).

On July 9, 1992, South Dakota submitted an application for ''complete'' program approval which includes regulation of both petroleum and hazardous substance tanks. The State of South Dakota established authority to implement an underground storage tank program through South Dakota Codified Law 34A–2–98 and 34A–2–99 and the Administrative Rules of South Dakota that became effective November 30, 1987.

On July 22, 1994, EPA published a tentative decision announcing its intent to grant South Dakota final approval. Further background on the tentative decision to grant approval appears at 59 FR 37455, July 22, 1994. Along with the tentative determination, EPA announced the availability of the application for public comment and provided notice that a public hearing would be provided if significant public interest was shown. EPA received no request for a public hearing, therefore, a hearing was not held.

B. Public Comment

The EPA received one comment on the tentative determination of final approval for South Dakota's UST program. The commenter asserted that the South Dakota leak detection requirements for suction piping appeared to be less stringent than the federal requirements. The State requires that suction piping use a monthly monitoring release detection method or be tightness tested at least every three years. The State does not require release detection, if suction piping is designed to allow the contents of the pipe to drain back into the storage tank if the suction is released. EPA believes that the State implements a program which meets the federal objective for release detection for suction piping.

C. Decision

After reviewing the public comments on the State application and program since the tentative decision, I conclude that South Dakota's application for final approval meets all of the statutory and regulatory requirements established by Subtitle I of RCRA. Accordingly, South Dakota is granted final approval to operate its underground storage tank program in lieu of the Federal program. This final determination to approve the South Dakota UST program does not extend to ''Indian Country,'' as defined in 18 U.S.C. 1151, including the following ''existing or former'' Indian reservations in the State of South Dakota: Cheyenne River, Crow Creek, Flandreau, Lake Traverse (Sisseton-Wahpeton), Lower Brule, Pine Ridge, Rosebud, Standing Rock, and Yankton. South Dakota now has the responsibility for managing underground storage tank facilities within its borders and carrying out all aspects of the UST program except for facilities located within ''Indian Country,'' where EPA will retain regulatory authority. South Dakota also has primary enforcement responsibility, although EPA retains the right to conduct inspections under section 9005 of RCRA 42 U.S.C. 6991d and to take enforcement actions under section 9006 of RCRA 42 U.S.C. 6991e.

Compliance With Executive Order 12866

The Office of Management and Budget has exempted this rule from the requirements of section 6 of Executive Order 12866.

Certification Under the Regulatory Flexibility Act

Pursuant to the provisions of 5 U.S.C. 605(b), I hereby certify that this approval will not have a significant economic impact on a substantial number of small entities. The approval effectively suspends the applicability of certain Federal regulations in favor of South Dakota's program, thereby eliminating duplicative requirements for owners and operators of underground storage tanks in the State. It does not impose any new burdens on small entities. This rule, therefore, does not require a regulatory flexibility analysis.

List of Subjects in 40 CFR Part 281

Environmental protection, Administrative practice and procedure, Hazardous materials, State program approval, Underground storage tanks.

Authority: This notice is issued under the authority of sections 2002(a), 7004(b), and 9004 of the Solid Waste Disposal Act as amended, 42 U.S.C. 6912(a), 6974(b), and 6991(c).

Dated: February 23, 1995.

Kerrigan Clough,

Acting Regional Administrator.

[FR Doc. 95–6405 Filed 3–15–95; 8:45 am]

BILLING CODE 6560–50–P

---

40 CFR Part 282

[FRL–5167–5]

Underground Storage Tank Program: Approved State Program for South Dakota

AGENCY: Environmental Protection Agency (EPA).

ACTION: Immediate final rule.

SUMMARY: The Resource Conservation and Recovery Act of 1976, as amended (RCRA), authorizes the U.S. Environmental Protection Agency (EPA) to grant approval to states to operate their underground storage tank programs in lieu of the federal program. 40 CFR part 282 codifies EPA's decision to approve state programs and incorporates by reference those provisions of the state statutes and regulations that will be subject to EPA's inspection and enforcement authorities

under sections 9005 and 9006 of RCRA subtitle I and other applicable statutory and regulatory provisions. This rule codifies in part 282 the prior approval of South Dakota's underground storage tank program and incorporates by reference appropriate provisions of state statutes and regulations.

DATES: This regulation is effective May 15, 1995, unless EPA publishes a prior **Federal Register** notice withdrawing this immediate final rule. All comments on the codification of South Dakota's underground storage tank program must be received by the close of business April 17, 1995. The incorporation by reference of certain publications listed in the regulations is approved by the Director of the Federal Register, as of May 15, 1995, in accordance with 5 U.S.C. 552(a).

ADDRESSES: Comments may be mailed to Jo Taylor, 8HWM–WM, Hazardous Waste Management Division, Underground Storage Tank Program, U.S. EPA Region 8, 999–18th Street, Suite 500, Denver, Colorado, 80202–2466. Comments received by EPA may be inspected in the EPA Library, Suite 144, at the above address from 12:00 p.m. to 4:00 p.m., Monday through Friday, excluding federal holidays.

FOR FURTHER INFORMATION CONTACT: Jo Taylor, 8HWM–WM, Underground Storage Tank Program, U.S. EPA Region 8, 999–18th Street, Suite 500, Denver, Colorado, 80202–2466. Phone: (303) 293–1511.

SUPPLEMENTARY INFORMATION:

Background

Section 9004 of the Resource Conservation and Recovery Act of 1976, as amended, (RCRA), 42 U.S.C. 6991c, allows the U.S. Environmental Protection Agency to approve state underground storage tank programs to operate in the state in lieu of the federal underground storage tank program. EPA is publishing, simultaneously a **Federal Register** document announcing its decision to grant approval to South Dakota elsewhere in this issue of the **Federal Register**. Approval will be effective on May 15, 1995.

EPA codifies its approval of State programs in 40 CFR part 282 and incorporates by reference therein the state statutes and regulations that will be subject to EPA's inspection and enforcement authorities under sections 9005 and 9006 of subtitle I of RCRA, 42 U.S.C. 6991d and 6991e, and other applicable statutory and regulatory provisions. Today's rulemaking codifies EPA's approval of the South Dakota underground storage tank program. This codification reflects the state program in effect at the time EPA grants South Dakota approval under section 9004(a), 42 U.S.C. 6991c(a) for its underground storage tank program. Notice and opportunity for comment were provided earlier on the Agency's decision to approve the South Dakota program, and EPA is not now reopening that decision nor requesting comment on it.

This effort provides clear notice to the public of the scope of the approved program in each state. By codifying the approved South Dakota program and by amending the Code of Federal Regulations whenever a new or different set of requirements is approved in South Dakota, the status of federally approved requirements of the South Dakota program will be readily discernible. Only those provisions of the South Dakota underground storage tank program for which approval has been granted by EPA will be incorporated by reference for enforcement purposes.

To codify EPA's approval of South Dakota's underground storage tank program, EPA has added § 282.91 to title 40 of the CFR. Section 282.91 incorporates by reference for enforcement purposes the State's statutes and regulations. Section 282.91 also references the Attorney General's Statement, Demonstration of Adequate Enforcement Procedures, the Program Description, and the Memorandum of Agreement, which are approved as part of the underground storage tank program under subtitle I of RCRA.

The Agency retains the authority under sections 9005 and 9006 of subtitle I of RCRA, 42 U.S.C. 6991d and 6991e, and other applicable statutory and regulatory provisions to undertake inspections and enforcement actions in approved states. With respect to such an enforcement action, the Agency will rely on federal sanctions, federal inspection authorities, and federal procedures rather than the state authorized analogs to these provisions. Therefore, the approved South Dakota enforcement authorities will not be incorporated by reference. Section 282.91 lists those approved South Dakota authorities that would fall into this category.

The public also needs to be aware that some provisions of the State's underground storage tank program are not part of the federally approved state program. These non-approved provisions are not part of the RCRA subtitle I program because they are ''broader in scope'' than subtitle I of RCRA. See 40 CFR 281.12(a)(3)(ii). As a result, state provisions which are ''broader in scope'' than the federal program are not incorporated by reference for purposes of enforcement in part 282. Section 282.91 of the codification simply lists for reference and clarity the South Dakota statutory and regulatory provisions which are ''broader in scope'' than the federal program and which are not, therefore, part of the approved program being codified today. ''Broader in scope'' provisions cannot be enforced by EPA; the State, however, will continue to enforce such provisions.

Certification Under the Regulatory Flexibility Act

This rule codifies the decision already made, published elsewhere in this issue of the **Federal Register**, to approve the South Dakota underground storage tank program and thus has no separate effect. Therefore, this rule does not require a regulatory flexibility analysis. Thus, pursuant to section 605(b) of the Regulatory Flexibility Act, 5 U.S.C. 605(b), I hereby certify that this rule will not have a significant economic impact on a substantial number of small entities.

Compliance With Executive Order 12866

The Office of Management and Budget has exempted this rule from the requirements of Section 6 of Executive Order 12866.

Paperwork Reduction Act

Under the Paperwork Reduction Act, 44 U.S.C. 3501 *et seq.*, Federal agencies must consider the paperwork burden imposed by any information request contained in a proposed or final rule. This rule will not impose any information requirements upon the regulated community.

List of Subjects in 40 CFR Part 282

Environmental protection, Hazardous substances, Incorporation by reference, Intergovernmental relations, State program approval, Underground storage tanks, Water pollution control.

Dated: February 23, 1995.

Kerrigan Clough,

Acting Regional Administrator.

For the reasons set forth in the preamble, 40 CFR part 282 is proposed to be amended as follows:

PART 282—APPROVED UNDERGROUND STORAGE TANK PROGRAMS

1. The authority citation for part 282 continues to read as follows:

Authority: 42 U.S.C. 6912, 6991c, 6991d, and 6991e.

Subpart B—Approved State Programs

2. Subpart B is amended by adding § 282.91 to read as follows:

§ 282.91 South Dakota State-Administered Program.

(a) The State of South Dakota is approved to administer and enforce an underground storage tank program in lieu of the federal program under Subtitle I of the Resource Conservation and Recovery Act of 1976 (RCRA), as amended, 42 U.S.C. 6991 *et seq.* The State's program, as administered by the South Dakota Department of Environment and Natural Resources, was approved by EPA pursuant to 42 U.S.C. 6991c and part 281 of this chapter. EPA approved the South Dakota program on March 16, 1995 and it was effective on May 15, 1995.

(b) South Dakota has primary responsibility for enforcing its underground storage tank program. However, EPA retains the authority to exercise its inspection and enforcement authorities under sections 9005 and 9006 of subtitle I of RCRA, 42 U.S.C. 6991d and 6991e, as well as under other statutory and regulatory provisions.

(c) To retain program approval, South Dakota must revise its approved program to adopt new changes to the federal subtitle I program which make it more stringent, in accordance with section 9004 of RCRA, 42 U.S.C. 6991c, and 40 CFR part 281, subpart E. If South Dakota obtains approval for the revised requirements pursuant to section 9004 of RCRA, 42 U.S.C. 6991c, the newly approved statutory and regulatory provisions will be added to this subpart and notice of any change will be published in the **Federal Register**.

(d) South Dakota has final approval for the following elements submitted to EPA in South Dakota's program application for final approval and approved by EPA on [insert date of publication]. Copies may be obtained from the Underground Storage Tank Program, South Dakota Department of Environment and Natural Resources, 523 East Capitol, Pierre, South Dakota 57501.

(1) *State statutes and regulations.* (i) The provisions cited in this paragraph are incorporated by reference as part of the underground storage tank program under subtitle I of RCRA, 42 U.S.C. 6991 *et seq.*

(A) South Dakota Statutory Requirements Applicable to the Underground Storage Tank Program, 1995.

(B) South Dakota Regulatory Requirements Applicable to the Underground Storage Tank Program, 1995.

(ii) The following statutes are part of the approved state program, although not incorporated by reference herein for enforcement purposes.

(A) The statutory provisions include: South Dakota Codified Law, Water Pollution Control, Chapter 34A–2, Sections 46 and 48, Sections 72 through 75, Chapters 34A–10 and 34A–12.

(iii) The following statutory provisions are broader in scope than the federal program, are not part of the approved program, and are not incorporated by reference herein for enforcement purposes.

(A) South Dakota statutes Annotated, Chapter 34A–2, Section 100, insofar as it applies to above ground stationary storage tanks, Section 102, insofar as it applies to installation of above ground stationary storage tanks, Section 101, insofar as it applies to corrective action for above ground stationary storage tanks.

(2) *Statement of legal authority.* (i) ''Attorney General's Statement for Final Approval'', signed by the Attorney General of South Dakota on June 17, 1992, though not incorporated by reference, is referenced as part of the approved underground storage tank program under Subtitle I of RCRA, 42 U.S.C. 6991 *et seq.*

(ii) Letter from the Attorney General of South Dakota to EPA, June 17, 1992, though not incorporated by reference, is referenced as part of the approved underground storage tank program under Subtitle I of RCRA, 42 U.S.C. 6991 *et seq.*

(3) *Demonstration of procedures for adequate enforcement.* The ''Demonstration of Procedures for Adequate Enforcement'' submitted as part of the complete application in October 1993, though not incorporated by reference, is referenced as part of the approved underground storage tank program under subtitle I of RCRA, 42 U.S.C. 6991 *et seq.*

(4) *Program Description.* The program description and any other material submitted as part of the original application in June 1992, though not incorporated by reference, are referenced as part of the approved underground storage tank program under Subtitle I of RCRA, 42 U.S.C. 6991 *et seq.*

(5) *Memorandum of Agreement.* The Memorandum of Agreement between EPA Region VIII and the South Dakota Department of Environment and Natural Resources, signed by the EPA Regional Administrator on February 23, 1995, though not incorporated by reference, is referenced as part of the approved underground storage tank program under Subtitle I of RCRA, 42 U.S.C. 6991 *et seq.*

3. Appendix A to part 282 is amended by adding in alphabetical order ''South Dakota'' and its listing.

Appendix A to Part 282—State Requirements Incorporated by Reference in Part 282 of the Code of Federal Regulations

* * * * *

South Dakota

(a) The statutory provisions include South Dakota Statutes Annotated, Chapter 34A–2, Sections 98 and 99. Underground Storage Tanks:

Section 98 Underground storage tanks—Definitions.
Section 99 Underground storage tanks—Adoption of Rules—Violation.

(b) The regulatory provisions include State of South Dakota Administrative Rules, Chapter 74:03:28, Underground Storage Tanks, Department of Environment and Natural Resources, June 24, 1992:

Section 74:03:28:01 Definitions.
Section 74:03:28:02 Performance standards for new UST systems—General requirements.
Section 74:03:28:03 Upgrading of existing UST systems—General requirements and deadlines.
Section 74:03:28:04 Notification requirements for UST systems.
Section 74:03:28:05 Spill and overfill control.
Section 74:03:28:06 Operation and maintenance of cathodic protection.
Section 74:03:28:07 Compatibility.
Section 74:03:28:08 Repairs allowed—general requirements.
Section 74:03:28:09 Maintenance and availability of records.
Section 74:03:28:10 Release detection for all UST systems—general requirements and deadlines.
Section 74:03:28:11 Release detection requirements for petroleum UST systems.
Section 74:03:28:12 Release detection requirements for pressure piping.
Section 74:03:28:13 Recordkeeping.
Section 74:03:28:14 Release notification plan.
Section 74:03:28:15 Reported of suspected releases.
Section 74:03:28:16 Release investigation and confirmation.
Section 74:03:28:17 Off-site impacts and source investigation.
Section 74:03:28:18 General requirements for corrective action for releases from UST systems.
Section 74:03:28:19 Initial abatement requirements and procedures for releases from UST systems.
Section 74:03:28:20 Free product removal.
Section 74:03:28:21 Additional site investigation for releases from UST systems.
Section 74:03:28:22 Soil and groundwater cleanup for releases from UST systems.
Section 74:03:28:23 Reporting of releases from UST systems.

Section 74:03:28:28 Reporting of hazardous substance releases from UST systems.
Section 74:03:28:29 Temporary removal from use.
Section 74:03:28:30 Temporary closure.
Section 74:03:28:31 Permanent closure.
Section 74:03:28:32 Postclosure requirements.
Section 74:03:29:01 Applicability.
Section 74:03:29:23 Definitions.
Section 74:03:29:24 Financial responsibility rules.

[FR Doc. 95–6404 Filed 3–15–95; 8:45 am]

BILLING CODE 6560–50–P

federal register

Thursday
March 16, 1995

Part III

Department of Defense

General Services Administration

National Aeronautics and Space Administration

48 CFR Part 1 et al.

Federal Acquisition Regulation; Special Contracting Methods; Task and Delivery Order Contracts; Proposed Rules

DEPARTMENT OF DEFENSE

GENERAL SERVICES ADMINISTRATION

NATIONAL AERONAUTICS AND SPACE ADMINISTRATION

48 CFR Parts 1, 7, 17, 37, 49, and 52

[FAR Case 94–710]

Federal Acquisition Regulation; Special Contracting Methods

AGENCIES: Department of Defense (DOD), General Services Administration (GSA), and National Aeronautics and Space Administration (NASA).

ACTION: Proposed rule.

SUMMARY: This proposed rule is issued pursuant to the Federal Acquisition Streamlining Act of 1994 (the Act), Sections 1022 and 1072 on multiyear contracting; Section 1074 on the Economy Act; Sections 1503, 1504, 1552, and 1553 on the delegation of procurement functions and determinations and decisions; and Section 6002 on contracting functions performed by Federal personnel. This regulatory action is subject to Office of Management and Budget review under Executive Order 12866, dated September 30, 1993.

DATES: Comments should be submitted on or before May 15, 1995 to be considered in the formulation of a final rule.

ADDRESSES: Interested parties should submit written comments to: General Services Administration, FAR Secretariat (VRS), 18th & F Streets, NW., Room 4037, Washington, DC 20405, Telephone: (202) 501–4755.

Please cite FAR case 94–710 in all correspondence related to this case.

FOR FURTHER INFORMATION CONTACT: Mr. Ed McAndrew, Special Contracting Team Leader, at (202) 501–1474 in reference to this FAR case. For general information, contact the FAR Secretariat, Room 4037, GSA Building, Washington, DC 20405, (202) 501–4755. Please cite FAR case 94–710.

SUPPLEMENTARY INFORMATION:

A. Background

The Federal Acquisition Streamlining Act of 1994 (Pub. L. 103–355) (the Act) provides authorities that streamline the acquisition process and minimize burdensome government-unique requirements. Major changes that can be expected in the acquisition process as a result of the Act's implementation include changes in the areas of Commercial Item Acquisition, Simplified Acquisition Procedures, the Truth in Negotiations Act, and introduction of the Federal Acquisition Computer Network (FACNET).

FAR Case 94–710

This notice announces FAR revisions developed under FAR case 94–710 which was based on provisions in the Act which provided for multiple awards under certain circumstances; permitted civilian agencies to enter into multiyear contracts under certain circumstances; and for agencies to use the Economy Act authority to acquire supplies and services from another agency. Other provisions of the statute were minor in nature and were not as important as the aforementioned provisions.

The FAR Council is interested in an exchange of ideas and opinions with respect to the regulatory implementation of the Act. For that reason, the FAR Council is conducting a series of public meetings. However, the FAR Council has not scheduled a public meeting on this rule (FAR case 94–710) because of the clarifying and non-controversial nature of the rule. If the public believes such a meeting is needed with respect to this rule, a letter requesting a public meeting and outlining the nature of the requested meeting shall be submitted to and received by the FAR Secretariat (see **ADDRESSES** caption, above) on or before April 17, 1995. The FAR Council will consider such requests in determining whether a public meeting on this rule should be scheduled.

B. Regulatory Flexibility Act

The proposed changes may have a significant economic impact on a substantial number of small entities within the meaning of the Regulatory Flexibility Act, 5 U.S.C. 601, *et seq.*, because promulgation of this policy is expected to improve access to the procurement process for small and disadvantaged businesses, and to broaden the scope of competitive acquisitions for which small businesses may be eligible. There is a potential negative impact resulting from consolidation of contract requirements under a multiyear contract; however, it is expected that this negative impact could be mitigated by an increase in the opportunities for small businesses to receive subcontracts. The rule will place no limit on small businesses' ability to participate. An Initial Regulatory Flexibility Analysis (IRFA) has been prepared and will be provided to the Chief Counsel for Advocacy for the Small Business Administration. Comments from small entities concerning the affected FAR subpart will be considered in accordance with 5 U.S.C. 610. Such comments must be submitted separately and should cite 5 U.S.C. 601, *et seq.* (FAR Case 94–710), in correspondence.

C. Paperwork Reduction Act

The Paperwork Reduction Act does not apply because the proposed changes to the FAR do not impose recordkeeping or information collection requirements, or collections of information from offerors, contractors, or members of the public which require the approval of the Office of Management and Budget under 44 U.S.C. 3501, *et seq.*

List of Subjects in 48 CFR Parts 1, 7, 17, 37, 49 and 52

Government procurement.

Dated: March 9, 1995.

Barry Cohen,

Project Manager for the Implementation of the Federal Acquisition Streamlining Act of 1994.

Therefore, it is proposed that 48 CFR Parts 1, 7, 17, 37, 49 and 52 be amended as set forth below:

PART 1—FEDERAL ACQUISITION REGULATIONS SYSTEM

1. The authority citation for 48 CFR Parts 1, 7, 17, 37, 49 and 52 continues to read as follows:

Authority: 40 U.S.C. 486(c); 10 U.S.C. chapter 137; and 42 U.S.C. 2473(c).

2. Section 1.601 is revised to read as follows:

1.601 General.

(a) Unless specifically prohibited by another provision of law, authority and responsibility to contract for authorized supplies and services are vested in the agency head. The agency head may establish contracting activities and delegate broad authority to manage the agency's contracting functions in accordance with agency procedures to heads of such contracting activities. Contracts may be entered into and signed on behalf of the government only by contracting officers. In some agencies, a relatively small number of high level officials are designated contracting officers solely by virtue of their positions. Contracting officers below the level of a head of a contracting activity shall be selected and appointed under 1.603.

(b) The heads of two or more agencies may by agreement—

(1) Delegate acquisition functions and assign acquisition responsibilities from one agency to another of those agencies or to an officer or civilian employee of those agencies; or

(2) Create joint or combined officers to exercise acquisition functions and responsibilities.

PART 7—ACQUISITION PLANNING

3. Section 7.103 is amended by adding paragraph (m) to read as follows:

7.103 Agency-head responsibilities.

* * * * *

(m) Making a determination, prior to issuance of a solicitation for advisory and assistance services involving the analysis and evaluation of proposals submitted in response to a solicitation, that a sufficient number of covered personnel with the training and capability to perform an evaluation and analysis of proposals submitted in response to a solicitation are not readily available within the agency or from another Federal agency in accordance with the guidelines at 48 CFR (FAR) 37.204. Covered personnel who may be paid for evaluation or analysis are:

(1) An employee means an officer or an individual who is appointed in the civil service by one of the following acting in an official capacity; (i) the President; (ii) a Member of Congress; (iii) a member of the uniformed services; (iv) an individual who is an employee; (v) the head of a government controlled corporation; or (vi) an adjutant general appointed by the Secretary concerned under the national guard (32 U.S.C. 709(c)).

(2) A member of the Armed Forces of the United States.

(3) A person assigned to a Federal agency who has been transferred to another position in the competitive service in another agency.

PART 17—SPECIAL CONTRACTING METHODS

4. Subpart 17.1 is revised to read as follows:

Subpart 17.1—Multiyear Contracting

Sec.
17.101 Authority.
17.102 Applicability.
17.103 Definitions.
17.104 General.
17.105 Policy.
17.105–1 Uses.
17.105–2 Objectives.
17.106 Procedures.
17.106–1 General.
17.106–2 Solicitations.
17.106–3 Special procedures applicable to DoD, NASA and the Coast Guard.
17.107 Options.
17.108 Congressional notification.
17.109 Contract clauses.

17.101 Authority.

This subpart implements Section 304B of the Federal Property and Administrative Services Act of 1949 (41 U.S.C. 254c) and 10 U.S.C. 2306b and provides policy and procedures for the use of multiyear contracting.

17.102 Applicability.

For DoD, NASA, and the Coast Guard, the authorities cited in 17.101 do not apply to contracts for the purchase of supplies to which 40 U.S.C. 759 applies (information resource management supply contracts).

17.103 Definitions.

Annual funding means appropriations of which Congress limits obligational availability to a single fiscal year.

Cancellation means the cancellation (within a contractually specified time) of the total requirements of all remaining program years. Cancellation results when the contracting officer (a) notifies the contractor of nonavailability of funds for contract performance for any subsequent program year, or (b) fails to notify the contractor that funds are available for performance of the succeeding program year requirement.

Cancellation ceiling means the maximum amount that the contractor can receive in the event that cancellation occurs.

Cancellation charge means the amount of unrecovered costs which would have been recouped through amortization over the full term of the contract, including the term cancelled.

Multiple year contract, as used in this subpart, means a contract having a term of more than one year regardless of the type of funding that applies.

Multiyear contract means a contract for the purchase of supplies or services for more than one, but not more than five, program years. A multiyear contract may provide that performance under the contract during the second and subsequent years of the contract is contingent upon the appropriation of funds, and (if it does so provide) may provide for a cancellation payment to be made to the contractor if appropriations are not made.

Multiyear funding means appropriated funds covering more than 1 fiscal year.

No-year funding means funding available for new obligations without regard to fiscal year and until the appropriation is either exhausted or otherwise cancelled.

Nonrecurring costs means those production costs which are generally incurred on a one-time basis and include such costs as plant or equipment relocation, plant rearrangement, special tooling and special test equipment, preproduction engineering, initial spoilage and rework, and specialized work force training.

Recurring costs, as used in this subpart, means production costs that vary with the quantity being produced such as labor and materials.

Termination for convenience means the procedure which may apply to any Government contract, including multiyear contracts. As contrasted with cancellation, termination can be effected at any time during the life of the contract (cancellation is effected between fiscal years) and can be for the total quantity or a partial quantity (whereas cancellation must be for all subsequent fiscal years' quantities).

17.104 General.

(a) Multiyear contracting is a type of multiple year contract that employs special contracting methods to acquire known requirements in quantities and total cost not over planned requirements for up to 5 years unless otherwise authorized by statute, even though the total funds ultimately to be obligated may not be available at the time of contract award. This method may be used in sealed bidding or contracting by negotiation.

(b) Multiyear contracting is a flexible contracting method applicable to a wide range of acquisitions. The extent to which cancellation provisions are used in multiyear contracts will depend on the unique circumstances of each contracting action. Accordingly, for multiyear contracts, the agency head may authorize modification of the requirements of this subpart and the clauses at 48 CFR (FAR) 52.217–2, Cancellation Under Multiyear Contracts.

17.105 Policy.

17.105–1 Uses.

(a) The contracting officer may enter into a multiyear contract if—

(1) Funds are available and obligated for the contract, for the full period of the contract or for the first fiscal year in which the contract is in effect, and for the estimated costs associated with any necessary cancellation of the contract; and

(2) The head of the contracting agency determines that—

(i) The need for the supplies or services is reasonably firm and continuing over the period of the contract; and

(ii) A multiyear contract will serve the best interests of the United States by encouraging full and open competition or promoting economy in administration, performance, and operation of the agency's programs, and

(3) If for DoD, NASA or the Coast Guard—

(i) The use of such a contract will result in substantial savings of the total estimated costs of carrying out the program through annual contracts;

(ii) With regard to paragraph (a)(2)(i) of this section, the minimum need to be purchased is expected to remain substantially unchanged during the contemplated contract period in terms of production rate, procurement rate, and total quantities;

(iii) There is a stable design for the supplies to be acquired and the technical risks associated with such supplies are not excessive; and

(iv) That the estimates of both the cost of the contract and the estimated cost avoidance through the use of a multiyear contract are realistic.

(b) Multiyear contracting may be used when no-year, annual, multiple year or multiyear funding is available.

(c) The multiyear contracting method may be used for the acquisition of supplies or services.

(d) If funds are not appropriated to support the succeeding years' requirements, the agency must cancel the contract.

17.105–2 Objectives.

Use of multiyear contracting is encouraged to take advantage of one or more of the following:

(a) Lower costs.

(b) Enhancement of standardization.

(c) Reduction of administrative burden in the placement and administration of contracts.

(d) Substantial continuity of production or performance, thus avoiding annual startup costs, preproduction testing costs, make ready expenses, and phaseout costs.

(e) Stabilization of contractor work forces.

(f) Avoidance of the need for establishing and ''proving out'' quality control techniques and procedures for a new contractor each year.

(g) Broadening the competitive base with opportunity for participation by firms not otherwise willing or able to compete for lesser quantities, particularly in cases involving high startup costs.

(h) Provide incentives to contractors to improve productivity through investment in capital facilities, equipment, and advanced technology.

17.106 Procedures.

17.106–1 General.

(a) *Method of contracting.* The nature of the requirement should govern the selection of the method of contracting, since the multiyear procedure is compatible with sealed bidding, including two-step sealed bidding, and contract negotiation.

(b) *Type of contract.* Given the longer performance period associated with multiyear acquisition, consideration in pricing fixed-priced contracts should be given to the use of economic price adjustment terms, profit objectives comparable with contractor risk, financing arrangements and cash flow requirements.

(c) *Cancellation procedures.* (1) All program years except the first are subject to cancellation. For each program year subject to cancellation, the contracting officer shall establish a cancellation ceiling. Ceilings must exclude amounts for items included in prior program years. The contracting officer shall reduce the cancellation ceiling for each program year in direct proportion to the remaining requirements subject to cancellation. For example, consider that the total nonrecurring costs (see 48 CFR (FAR) 15.804–6) are estimated at ten percent of the total multiyear price, and the percentages for each of the program-year requirements for 5-years are (i) 30 in the first year, (ii) 30 in the second, (iii) 20 in the third, (iv) 10 in the fourth, and (v) 10 in the fifth. The cancellation percentages, after deducting three percent for the first program year, would be 7, 4, 2, and 1 percent of the total price applicable to the second, third, fourth, and fifth program years, respectively.

(2) In determining cancellation ceilings, the contracting officer must estimate reasonable preproduction or startup, labor learning, and other nonrecurring costs to be incurred by an ''average'' prime contractor or subcontractor, which would be applicable to, and which normally would be amortized over, the items or services to be furnished under the multiyear requirements. Nonrecurring costs include such costs, where applicable, as plant or equipment relocation or rearrangement, special tooling and special test equipment, preproduction engineering, initial rework, initial spoilage, pilot runs, allocable portions of the costs of facilities to be acquired or established for the conduct of the work, costs incurred for the assembly training and transportation of a specialized work force to and from the job site, and unrealized labor learning. Do not include any costs of labor or materials, or other expenses (except as indicated in this paragraph), which might be incurred for performance of subsequent program year requirements. The total estimate of the above costs must then be compared with the best estimate of the contract cost to arrive at a reasonable percentage or dollar figure. To perform this calculation, the contracting officer shall obtain in-house engineering cost estimates identifying detailed recurring and nonrecurring costs, the effect of labor learning.

(3) The contracting officer shall establish cancellation dates for each program year's requirements regarding production lead time and the date by which funding for these requirements can reasonably be established. The contracting officer shall include these dates in the schedule, as appropriate.

(d) *Cancellation ceilings.* Cancellation ceilings and dates may be revised after issuing the solicitation if necessary. In sealed bidding, the contracting officer shall change the ceiling by amending the solicitation before bid opening. In two-step sealed bidding, discussions conducted during the first step may indicate the need for revised ceilings and dates which may be incorporated in step two. In a negotiated acquisition, negotiations with offerors may provide information requiring a change in cancellation ceilings and dates before final negotiation and contract award.

(e) *Funding/payment of cancellation charges.* If cancellation occurs, the contractor is entitled to payment (see the clause at 48 CFR (FAR) 52.217–2, Cancellation Under Multiyear Contracts).

(f) *Presolicitation or pre-bid conferences.* To ensure that all interested sources of supply are thoroughly aware of how multiyear contracting is accomplished, use of presolicitation or pre-bid conferences may be advisable.

(g) *Payment limit.* The contracting officer shall limit the Government's payment obligation to an amount available for contract performance. The contracting officer shall insert the amount for the first program year in the contract upon award and modify it for successive program years upon availability of funds.

(h) *Termination payment.* If the contract is terminated for the convenience of the Government in whole, including items subject to cancellation, the Government's obligation shall not exceed the amount specified in the schedule as available for contract performance, plus the cancellation ceiling.

17.106–2 Solicitations.

Solicitations for multiyear contracts shall reflect all the factors to be considered for evaluation, specifically including the following—

(a) The requirements, by item of supply or service, for the—

(1) First program year; and

(2) Multiyear contract including the requirements for each program year.

(b) Criteria for comparing the lowest evaluated submission on the first program year's requirement to the lowest evaluated submission on the multiyear requirements.

(c) A provision that, if the Government determines before award that only the first program year requirements are needed, the Government may evaluate offers and make award solely on the basis of price, or estimated cost and fee, offered on that year's requirements.

(d) A provision specifying a separate cancellation ceiling (on a percentage or dollar basis) and dates applicable to each program year subject to a cancellation (see 17.106–1 (c) and (d)).

(e) A statement that award will not be made on less than the first program year requirements.

(f) Unless Government administrative costs incident to annual contracting and administration can be reasonably established, they shall not be used as a factor for evaluation. If so utilized, their monetary value shall be set forth in the solicitation.

(g) The cancellation ceiling shall not be an evaluation factor.

17.106–3 Special procedures applicable to DoD, NASA and the Coast Guard.

(a) *Participation by subcontractors, suppliers and vendors.* In order to broaden the defense industrial base, to the maximum extent practicable—

(1) Multiyear contracting shall be used in such a manner as to seek, retain, and promote the use under such contracts of companies that are subcontractors, vendors and suppliers; and

(2) Upon accrual of any payment or other benefit under such a multiyear contract to any subcontractor, vendor, or supplier company participating in such contract, such payment or benefit shall be delivered to such company in the most expeditious manner practicable.

(b) *Protection of existing authority.* To the extent practicable, multiyear contracting shall not be carried out in a manner to preclude or curtail the existing ability of the department or agency to—

(1) Provide for competition in the production of supplies to be delivered under such a contract; or

(2) Provide for termination of a prime contract the performance of which is deficient with respect to cost, quality or schedule.

(c) *Cancellation or termination for insufficient funding.* In the event funds are not made available for the continuation of a multiyear contract awarded using the procedures in this section, the contract shall be cancelled or terminated and payment made from—

(1) Appropriations originally made available for the performance of the contract concerned;

(2) Appropriations currently available for procurement of the type of supplies concerned and not otherwise obligated; or

(3) Funds appropriated for these payments.

17.107 Options.

Benefits may accrue by including options in a multiyear contract. In that event, contracting officers must follow the requirements of subpart 17.2. Options should not include—

(a) Charges for plant and equipment already amortized, nor

(b) Other nonrecurring charges which were included in the basic contract.

17.108 Congressional notification.

(a) Except for DoD, NASA and the Coast Guard, a multiyear contract which includes a cancellation ceiling in excess of $10 million may not be awarded until the head of the agency gives written notification of the proposed contract and of the proposed cancellation ceiling for that contract to the Congress. The contract may not be awarded until the thirty-first day after the date of notification.

(b) For DoD, NASA, and the Coast Guard, a multiyear contract which includes a cancellation ceiling in excess of $100 million may not be awarded until the head of the agency gives written notification of the proposed contract and of the proposed cancellation ceiling for that contract to the Committees on Armed Services and on Appropriations of the Senate and House of Representatives. The contract may not be awarded until the thirty-first day after the date of notification.

17.109 Contract clauses.

(a) The contracting officer shall insert the clause at 48 CFR (FAR) 52.217–2, Cancellation Under Multiyear Contracts, in solicitations and contracts when a multiyear contract is contemplated.

(b) *Economic price adjustment clauses.* Economic price adjustment clauses are adaptable to multiyear contracting needs. When the period of production is likely to warrant a labor and material costs contingency in the contract price, the contracting officer should normally use an economic price adjustment clause (see 48 CFR (FAR) 16.203). When contracting for services, the contracting officer—

(1) Shall add the clause at 48 CFR (FAR) 52.222–43, Fair Labor Standards Act and Service Contract Act—Price Adjustment (Multiyear and Option Contracts), when the contract includes the clause at 48 CFR (FAR) 52.222–41, Service Contract Act of 1965;

(2) May modify the clause at 48 CFR (FAR) 52.222–43 in overseas contracts when laws, regulations, or international agreements require contractors to pay higher wage rates; or

(3) May use an economic price adjustment clause authorized by 48 CFR (FAR) 16.203 when potential fluctuations require coverage, and are not included in cost contingencies provided for by the clause at 48 CFR (FAR) 52.222–43.

5. Subpart 17.5 is revised to read as follows:

Subpart 17.5—Interagency Acquisitions Under the Economy Act

Sec.
17.500 Scope of subpart.
17.501 Definition.
17.502 General.
17.503 Determination requirements.
17.504 Ordering procedures.
17.505 Payment.

17.500 Scope of subpart.

(a) This subpart prescribes policies and procedures applicable to interagency acquisitions under the Economy Act (31 U.S.C. 1535). The Economy Act also provides authority for placement of orders between major organizational units within an agency. Procedures for such intra-agency transactions should be addressed in agency regulations.

(b) The Economy Act applies when more specific statutory authority does not exist. Examples of interagency acquisitions to which the Economy Act does not apply include acquisitions from required sources of supplies prescribed in 48 CFR Part 8, which have separate statutory authority.

17.501 Definition.

Interagency acquisition means a procedure by which an agency needing supplies or services (the requesting agency) obtains them from another agency (the servicing agency).

17.502 General.

(a) The Economy Act may not be used by an agency to circumvent conditions and limitations imposed on the use of Government funds appropriated for the acquisition.

(b) Acquisitions under the Economy Act are not exempt from the requirements of 48 CFR (FAR) part 7, subpart 7.3, Contractor Versus Government Performance.

(c) The Economy Act may not be used to make acquisitions conflicting with any other agency's authority or responsibility (for example, that of the Administrator of General Services under the Federal Property and Administrative Services Act).

17.503 Determination requirements.

(a) An agency may place orders with another agency for supplies or services that the servicing agency may be in a position or equipped to supply, render, or obtain by contract if it is determined by the head of the requesting agency that—

(1) It is in the Government's best interest to do so, and

(2) That the ordered supplies or services cannot be provided by contract as conveniently or cheaply by the requesting agency from a commercial enterprise.

(b) If the Economy Act order requires contracting action by the servicing agency, the determination shall include a finding that one or more of the following circumstances is applicable—

(1) The acquisition is appropriately made under an existing contract of the servicing agency to meet the requirements of the servicing agency for the same or similar goods or services;

(2) The servicing agency has capabilities or expertise to enter into a contract for such goods or services which is not available within the requesting agency; or

(3) The servicing agency is specifically authorized by law or regulation to purchase such goods or services on behalf of other agencies.

(c) Determinations shall be approved either by the contracting officer of the requesting agency with authority to contract for the goods or services to be ordered, or by another official designated by agency regulation to do so, except that if the servicing agency is not covered by the Federal Acquisition Regulation, approval of the determination may not be delegated below the senior procurement executive of the requesting agency.

17.504 Ordering procedures.

(a) Before placing an Economy Act order for supplies or services from another Government agency, the requesting agency shall make the determination required in 17.503. The servicing agency may require a copy of the determination to be furnished with the order.

(b) The order may be placed on any form or document that is acceptable to both agencies. The order should include—

(1) A description of the supplies or services required;

(2) Delivery requirements;

(3) A funds citation;

(4) A payment provision (see 17.505); and

(5) Acquisition authority as may be appropriate (see 17.504(d)).

(c) The requesting and servicing agencies should agree to procedures for the resolution of disagreements that may arise under interagency acquisitions, including, in appropriate circumstances, the use of a third-party forum. If a third party is proposed, consent of the third party should be obtained in writing.

(d) When an interagency acquisition requires the servicing agency to award a contract, the following procedures apply:

(1) If a justification and approval or a determination and findings (D&F) (other than the requesting agency's determination required in 17.502) is required by law or regulation, the servicing agency shall execute and issue the justification and approval or D&F. The requesting agency shall furnish the servicing agency any information needed to make the justification and approval and the D&F.

(2) The requesting agency shall also be responsible for furnishing other assistance that may be necessary, such as providing special contract terms or other requirements that must comply with any condition or limitation applicable to the funds of the requesting agency.

(3) The servicing agency is responsible for compliance with all other legal or regulatory requirements applicable to the contract, including (i) having adequate statutory authority for the contractual action, and (ii) complying fully with the competition requirements of 48 CFR part 6 (see 6.002).

(e) Nonsponsoring Federal agencies may use a Federally Funded Research and Development Center (FFRDC) only if the terms of the FFRDC's sponsoring agreement permit work from other than a sponsoring agency. Work placed with the FFRDC is subject to the acceptance by the sponsor and must fall within the purpose, mission, general scope of effort, or special competency of the FFRDC. (See 48 CFR (FAR) 35.017; see also 48 CFR (FAR) 6.302 for procedures to follow where using less than full and open competition). The nonsponsoring agency shall provide to the sponsoring agency necessary documentation that the requested work would not place the FFRDC in direct competition with domestic private industry.

17.505 Payment.

(a) Under the Economy Act—

(1) The servicing agency may ask the requesting agency, in writing, for advance payment for all or part of the estimated cost of furnishing the supplies or services; or

(2) If approved by the servicing agency, payment for actual costs may be made by the requesting agency after the supplies or services have been furnished.

(b) If advance payment is made, adjustment on the basis of actual costs shall be made as agreed by the agencies.

(c) Bills rendered or requests for advance payment shall not be subject to audit or certification in advance of payment.

(d) If the Economy Act order requires contracting action by the servicing agency, then in no event shall the servicing agency require, or the requiring agency pay, any fee or charge in excess of the actual cost (or estimated cost if the actual cost is not known) of entering into and administering the contract or other agreement under which the order is filled.

PART 37—SERVICE CONTRACTING

6. Subpart 37.2 is revised to read as follows:

Subpart 37.2—Advisory and Assistance Services

Sec.
37.200 Scope of subpart.
37.201 Definition.
37.202 Exclusions.
37.203 Policy.
37.204 Guidelines for determining availability of personnel.
37.205 Contracting officer responsibilities.

37.200 Scope of subpart.

This subpart prescribes policies and procedures for acquiring advisory and assistance services by contract. The subpart regulates these contracts with individuals and organizations for both personal and nonpersonal services.

37.201 Definition.

Advisory and assistance services means the following services when provided by nongovernmental sources—

(a) Management and professional support services;

(b) Studies, analyses and evaluations; and

(c) Engineering and technical services.

37.202 Exclusions.

The following activities and programs are excluded or exempted from the definition of advisory or assistance services:

(a) Routine automated data processing and telecommunications services unless such services are an integral part of a contract for the procurement of advisory and assistance services.

(b) Architectural and engineering services as defined in section 901 of the Brooks Architect-Engineers Act (40 U.S.C. 541).

(c) Research on basic mathematics or medical, biological, physical, social, psychological, or other phenomena.

37.203 Policy.

(a) The acquisition of advisory and assistance services is a legitimate way to improve Government services and operations. Accordingly, advisory and assistance services may be used at all organizational levels to help managers achieve maximum effectiveness or economy in their operations.

(b) Subject to 37.205, agencies may contract for advisory and assistance services, when essential to the agency's mission, to—

(1) Obtain outside points of view to avoid too limited judgment on critical issues;

(2) Obtain advice regarding developments in industry, university, or foundation research;

(3) Obtain the opinions, special knowledge, or skills of noted experts;

(4) Enhance the understanding of, and develop alternative solutions to, complex issues;

(5) Support and improve the operation of organizations; or

(6) Ensure the more efficient or effective operation of managerial or hardware systems.

(c) Advisory and assistance services shall not be—

(1) Used in performing work of a policy, decisionmaking, or managerial nature which is the direct responsibility of agency officials;

(2) Used to bypass or undermine personnel ceilings, pay limitations, or competitive employment procedures;

(3) Contracted for on a preferential basis to former Government employees;

(4) Used under any circumstances specifically to aid in influencing or enacting legislation; or

(5) Used to obtain professional or technical advice which is readily available within the agency or another Federal agency.

(d) *Limitation on payment for advisory and assistance services.* Except for Federally-Funded Research and Development Centers as provided by Section 23 of the Office of Federal Procurement Policy (OFPP) Act, (41 U.S.C. 419) as amended, contractors may be paid for services to conduct evaluations or analyses of any aspect of a proposal submitted for an acquisition only if—

(1) Neither agency personnel, nor personnel from another agency, with adequate training and capabilities to perform the required proposal evaluation, are readily available, and;

(2) A written determination is made in accordance with 37.204.

37.204 Guidelines for determining availability of personnel.

(a) As required by 37.203 for each evaluation or analysis of proposals, the head of an agency shall determine if sufficient personnel with the requisite training and capabilities are available within the agency to perform evaluation or analysis of proposals submitted for acquisitions.

(b) If, for a specific evaluation or analysis, such personnel are not available within the agency, the head of the agency shall—

(1) Determine which Federal agencies may have personnel with the required training and capabilities; and

(2) Consider the administrative cost and time associated with conducting the search, the dollar value of the procurement, other costs, such as travel costs involved in the use of such personnel, and the needs of the Federal agencies to make management decisions on the best use of available personnel in performing the agency's mission.

(c) If the supporting agency agrees to make the required personnel available, the agencies shall execute an agreement for the detail of the supporting agency's personnel to the requesting agency.

(d) If the requesting agency, after reasonable attempts to obtain personnel with the required training and capabilities, has been unable to identify such personnel, the head of the requesting agency may make the determination required by 37.203.

37.205 Contracting officer responsibilities.

The contracting officer shall ensure that the determination required in accordance with the guidelines at 37.104 is accomplished prior to issuing a solicitation.

PART 49—TERMINATION OF CONTRACTS

49.603–1 through 49.603–4 [Amended]

7. Sections 49.603–1(b)(7)(i), 49.603–2(b)(8)(i), 49.603–3(b)(7)(i), and 49.603–4(b)(4)(i)) are amended by removing the phrase ‘‘, and regulations made implementing 10 U.S.C. 2382, as amended, and any other’’ and inserting ‘‘any’’ in its place.

PART 52—SOLICITATION PROVISIONS AND CONTRACT CLAUSES

52.217–1 [Reserved]

8. Section 52.217–1 is removed and reserved.

9. Section 52.217–2 is amended by revising the section heading, the introductory text, the clause heading, paragraphs (a), (d), (f)(1) and (4), (g)(1) and (3), (h), and (i), and by removing *Alternate I* to read as follows:

52.217–2 Cancellation Under Multiyear Contracts.

As prescribed in 17.109, insert the following clause.

CANCELLATION UNDER MULTIYEAR CONTRACTS (XXX 1995)

(a) *Cancellation*, as used in this clause, means that the Government is cancelling its requirements for all supplies or services in program years subsequent to that in which notice of cancellation is provided. Cancellation shall occur by the date or within the time period specified in the Schedule, unless a later date is agreed to, if the Contracting Officer (1) notifies the Contractor that funds are not available for contract performance for any subsequent program year, or (2) fails to notify the Contractor that funds are available for performance of the succeeding program year requirement.

* * * * *

(d) The cancellation charge will cover only (1) costs (i) incurred by the prime Contractor and/or subcontractor, (ii) reasonably necessary for performance of the contract, and (iii) that would have been equitably amortized over the entire multiyear contract period but, because of the cancellation, are not so amortized, and (2) a reasonable profit or fee on the costs.

* * * * *

(f) * * *

(i) Reasonable nonrecurring costs (see FAR subpart 15.8) which are applicable to and normally would have been amortized in all supplies or services which are multiyear requirements;

* * * * *

(4) Costs not amortized solely because the cancellation had precluded anticipated benefits of Contractor or subcontractor learning.

(g) * * *

(1) Labor, material, or other expenses incurred by the Contractor or subcontractors for performance of the cancelled work;

* * * * *

(3) Anticipated profit or unearned fee on the cancelled work; or

* * * * *

(h) This contract may include an ‘‘Option’’ clause with the period for exercising the option limited to the date in the contract for notification that funds are available for the next succeeding program year. If so, the Contractor agrees not to include in option quantities any costs of a startup or nonrecurring nature, that have been fully set forth in the contract. The Contractor further agrees that the option quantities will reflect only those recurring costs, and a reasonable profit or fee necessary to furnish the additional option quantities.

(i) Quantities added to the original contract through the ‘‘Option’’ clause of this contract shall be included in the quantity cancelled

for the purpose of computing allowable cancellation charges.

(End of clause)

[FR Doc. 95–6438 Filed 3–15–95; 8:45 am]

BILLING CODE 6820–34–P

DEPARTMENT OF DEFENSE

GENERAL SERVICES ADMINISTRATION

NATIONAL AERONAUTICS AND SPACE ADMINISTRATION

48 CFR Parts 6, 16 and 52

[FAR Case 94–711]

Federal Acquisition Regulation; Task and Delivery Order Contracts

AGENCIES: Department of Defense (DOD), General Services Administration (GSA), and National Aeronautics and Space Administration (NASA).

ACTION: Proposed rule.

SUMMARY: The Civilian Agency Acquisition Council and the Defense Acquisition Regulations Council are proposing to amend Federal Acquisition Regulations (FAR) to implement the statutory requirements of the Federal Acquisition Streamlining Act with regard to task and delivery order contracts. This regulatory action is subject to Office of Management and Budget review under Executive Order 12866, dated September 30, 1993.

DATES: *Comment Due Date:* Comments should be submitted on or before May 15, 1995 to be considered in the formulation of a final rule.

Public Meeting: A public meeting will be held on April 13, 1995, at 1:00 p.m.

Oral/Written Statements: Views to be presented at the public meeting should be sent, in writing, to the FAR Secretariat, at the address given below, not later than April 10, 1995.

ADDRESSES: Interested parties should submit written comments to: General Services Administration, FAR Secretariat (VRS), 18th & F Streets, NW, Room 4037, Washington, DC 20405, Telephone: (202) 501–4755.

The public meeting will be held at: General Services Administration Auditorium, 18th & F Streets, NW, First Floor, Washington, DC 20405.

Please cite FAR case 94–711 in all correspondence related to this case.

FOR FURTHER INFORMATION CONTACT: Mr. Ed McAndrew, Special Contracting Team Leader, at (202) 501–1474 in reference to this FAR case. For general information, contact the FAR Secretariat, Room 4037, GSA Building, Washington, DC 20405 (202) 501–4755. Please cite FAR case 94–711.

SUPPLEMENTARY INFORMATION:

A. Background

The Federal Acquisition Streamlining Act of 1994 (Pub. L. 103–355) (the Act) provides authorities that streamline the acquisition process and minimize burdensome government-unique requirements. Major changes can be expected in the acquisition process as a result of the Act's implementation.

FAR Case 94–711

This notice announces FAR revisions developed under FAR case 94–711 which implement the requirements of sections 1004 and 1054, of the Act. Both of these sections contain statutory requirements for the award of task and delivery order contracts, the issuance of orders under such contracts and the award of such contracts for advisory and assistance services.

Public Meeting. The FAR Council is interested in an exchange of ideas and opinions on this rule. For that reason, the FAR Council is conducting a series of public meetings. A public meeting will be held on April 13, 1995, to enable the public to present its views on this rule. This rule will only be discussed at the public meeting session. Any subsequent public meetings will be devoted to other revisions to the FAR. The public is encouraged to furnish its views; the Council anticipates that public comments will be very helpful in formulating final rules.

Persons or organizations wishing to make presentations will be allowed 10 minutes each, provided they notify the FAR Secretariat at (202) 501–4755 and submit written statements of the presentation by April 10, 1995. Persons or organizations with similar positions are encouraged to select a common spokesman for presentation of their views. This meeting, in conjunction with this **Federal Register** notice soliciting public comments on the rule, will be the only opportunity for the public to present its views.

B. Regulatory Flexibility Act

The proposed changes may have a significant economic impact on a substantial number of small entities within the meaning of the Regulatory Flexibility Act, 5 U.S.C. 601, *et seq.*, because the rule may result in more opportunities for small businesses to compete for awards as a result of the multiple award preference. There is a potential negative impact resulting from consolidation of contract requirements under a task or delivery order contract; however, it is expected that this negative impact could be mitigated by an increase in the opportunities for small businesses to receive subcontracts. Small businesses could also form joint ventures to bid on larger contract requirements. An Initial Regulatory Flexibility Analysis (IRFA) has been prepared and will be provided to the Chief Counsel for Advocacy for the Small Business Administration. Comments from small entities concerning the affected FAR subpart will be considered in accordance with 5 U.S.C. 610. Such comments must be submitted separately and should cite 5 U.S.C. 601, *et seq.* (FAR Case 94–711), in correspondence.

C. Paperwork Reduction Act

The Paperwork Reduction Act does not apply because the proposed changes to the FAR do not impose recordkeeping or information collection requirements, or collections of information from offerors, contractors, or members of the public which require the approval of the Office of Management and Budget under 44 U.S.C. 3501, *et seq.*

List of Subjects in 48 CFR Parts 6, 16 and 52

Government procurement.

Dated: March 9, 1995.

Barry Cohen,

Project Manager for the Implementation of the Federal Acquisition Streamlining Act of 1994.

Therefore, it is proposed that 48 CFR Parts 6, 16 and 52 be amended as set forth below:

PART 6—COMPETITION REQUIREMENTS

1. The authority citation for 48 CFR Parts 6, 16 and 52 continues to read as follows:

Authority: 40 U.S.C. 486(c); 10 U.S.C. chapter 137; and 42 U.S.C. 2473(c).

2. Section 6.001 is amended by adding paragraph (f) to read as follows:

6.001 Applicability.

* * * * *

(f) Orders placed against task order and delivery order contracts entered into pursuant to 48 CFR (FAR) part 16, subpart 16.5.

PART 16—TYPES OF CONTRACTS

3. Section 16.500 is added to read as follows:

16.500 Scope of subpart.

This subpart prescribes policies and procedures for making awards of indefinite delivery contracts and establishes a preference scheme for

making multiple awards of delivery order contracts and task order contracts. This subpart does not limit the use of other than full and open competitive procedures authorized by 48 CFR (FAR) part 6. The preference scheme established by this subpart and the limitations on the use of contracts for advisory and assistance services do not apply to contracts subject to the procedures of 48 CFR (FAR) parts 36, 38, 39 and 41.

16.501 [Redesignated and amended]

4. Section 16.501 is redesignated as 16.501–1 and is amended by removing paragraph (c).

5. Section 16.501–2 is added to read as follows:

16.501–2 Definitions.

As used in this subpart—

Advisory and assistance services has the same meaning as set forth in 48 CFR (FAR) 37.201.

Delivery order contract means a contract for supplies that does not procure or specify a firm quantity of supplies (other than a minimum or maximum quantity) and that provides for the issuance of orders for the delivery of supplies during the period of the contract.

Task order contract means a contract for services that does not procure or specify a firm quantity of services (other than a minimum or maximum quantity) and that provides for the issuance of orders for the performance of tasks during the period of the contract.

6. Section 16.503 is amended in the introductory text of paragraph (a) by removing the word ''specific'', and by revising paragraphs (a)(2) and (b) and adding (a)(3) and (d) to read as follows:

16.503 Requirements contracts.

(a) * * *

(2) In addition to other required provisions and clauses, a solicitation for a requirements contract shall—

(i) Specify the period of the contract including the number of options and the period for which the contract may be extended under each option, if any;

(ii) Specify the maximum quantity or dollar value of services or supplies to be acquired under the contract;

(iii) Include a statement of work, specifications or other description that reasonably describes the general scope, nature, complexity, and purpose of the supplies or services to be acquired under the contract in a manner that will enable a prospective offeror to decide whether to submit an offer; and

(iv) State the procedures that will be used in issuing orders.

(3) The contract may specify maximum or minimum quantities that the Government may order under each individual order and the maximum that it may order during a specified period of time.

(b) *Application.* A requirements contract may be appropriate for acquiring any supplies or services when the Government anticipates recurring requirements but cannot predetermine the precise quantities of supplies or services that designated Government activities will need during a definite period. Funds are obligated by each delivery order, not by the contract itself.

* * * * *

(d) *Limitations on use of requirements contracts for advisory and assistance services in excess of three years and $10,000,000.* (1) Except as provided in 16.503(d)(2), no solicitation may be issued for a requirements contract for advisory and assistance services in excess of three years and $10,000,000 (including all options) which does not provide for multiple awards, unless the head of the agency or designee determines in writing that the services required are so unique or highly specialized that it is not practicable to award more than one contract.

(2) The limitation at 16.503(d)(1) is not applicable to the acquisition of supplies or services that includes the acquisition of advisory and assistance services if the head of an agency or designee determines that the advisory and assistance services are necessarily incident to, and not a significant component of, the contract.

7. Section 16.504 is amended in the introductory text of paragraph (a) by removing the word ''specific'', and by adding paragraphs (a)(4) and (c) to read as follows:

16.504 Indefinite-quantity contracts.

(a) * * *

(4) In addition to other required provisions and clauses, a solicitation for an indefinite-quantity contract shall—

(i) Specify the period of the contract including the number of options and the period for which the contract may be extended under each option, if any;

(ii) Specify the total minimum and maximum quantity or dollar value of services or supplies to be acquired under the contract;

(iii) Include a statement of work, specifications, or other description, that reasonably describes the general scope, nature, complexity, and purpose of the supplies or services to be acquired under the contract in a manner that will enable a prospective offeror to decide whether to submit an offer;

(iv) State the procedures that will be used in issuing orders;

(v) If multiple awards may be made, include the provision at 48 CFR (FAR) 52.216–27, Election to Award Single or Multiple Task Order Contracts or Delivery Order Contracts, to notify offerors that more than one contract may be awarded; and

(vi) If an award of a task order contract for advisory and assistance services in excess of three years and $10,000,000 (including all options) is anticipated, include the provision at 48 CFR (FAR) 52.216–28, Notice of Intent to Make Multiple Awards Under a Task Order Contract for Advisory and Assistance Services That Exceeds Three Years and $10,000,000, unless a determination to make a single award is made under 16.504(c)(2)(i)(A).

* * * * *

(c) *Multiple award preference*—(1) *General preference.* Except for indefinite quantity contracts for advisory and assistance services as provided in 16.504(c)(2), the contracting officer shall, to the maximum extent practicable, give preference to making multiple awards of indefinite-quantity contracts under a single solicitation for the same or similar supplies or services to two or more sources. In making a determination as to whether multiple awards are appropriate, the contracting officer shall exercise sound business judgment as part of acquisition planning. Multiple awards should not be made when—

(i) Only one contractor is capable of providing performance at the level of quality required because the supplies or services are unique or highly specialized;

(ii) Based on the contracting officer's knowledge of the market and consideration of the cost to the Government of administration of multiple contracts, more favorable terms and conditions, including pricing, will be provided if a single award is made;

(iii) The nature of the work to be performed under each order is integrally related;

(iv) Making multiple awards would be inconsistent with other provisions of law;

(v) The total estimated value of the contract is less than the simplified acquisition threshold; or

(vi) The contracting officer determines that multiple awards would not be in the best interests of the Government.

(2) *Contracts for advisory and assistance services.* (i) Except as provided in 16.504(c)(2)(ii), if an indefinite quantity contract for advisory and assistance services will not exceed three years and $10,000,000, including all options, a contracting officer need

not give preference to making multiple awards. If an indefinite quantity contract for advisory and assistance services is to exceed three years and $10,000,000, including all options, multiple awards shall be made unless—

(A) The head of the agency or designee determines in writing, prior to the issuance of the solicitation, that the services required under the task order contract are so unique or highly specialized that it is not practicable to award more than one contract;

(B) The head of the agency or designee determines in writing, after the evaluation of offers, that only one offeror is capable of providing the services required at the level of quality required; or

(C) Only one offer is received.

(ii) The requirements of 16.504(c)(2)(i) are not applicable to the acquisition of supplies or services that includes the acquisition of advisory and assistance services if the head of an agency or designee determines that the advisory and assistance services are necessarily incident to, and not a significant component of, the contract.

8. Sections 16.505 and 16.506 are redesignated as 16.506 and 16.505, respectively, and the newly-redesignated 16.505 is revised and the newly-redesignated 16.506 is amended by revising the heading and adding paragraphs (f) and (g) to read as follows:

16.505 Ordering.

(a) *General.* (1) When placing orders under this subpart, a separate notice under 48 CFR (FAR) 5.201 is not required.

(2) The ordering officer shall ensure that individual orders clearly describe all services to be performed or supplies to be delivered. The ordering officer shall also ensure that orders are within the scope, period, or maximum value of the contract.

(3) The contracting officer shall include in the contract Schedule the names of the activity or activities authorized to issue orders.

(4) If appropriate, authorization for placing oral orders may be included in the contract Schedule; provided, that procedures have been established for obligating funds and that oral orders are confirmed in writing.

(5) Orders may be placed by written telecommunication or other electronic means, if provided for in the contract.

(6) Orders placed under indefinite-delivery contracts shall contain the following information:

(i) Date of order.

(ii) Contract number and order number.

(iii) Item number and description, quantity, and unit price.

(iv) Delivery or performance date.

(v) Place of delivery or performance (including consignee).

(vi) Packaging, packing, and shipping instructions, if any.

(vii) Accounting and appropriation data.

(viii) Any other pertinent information.

(7) No protest under 48 CFR (FAR) part 33 is authorized in connection with the issuance or proposed issuance of an order under a task order contract or delivery order contract except for a protest on the grounds that the order increases the scope, period or maximum value of the contract.

(b) *Orders under multiple award task or delivery order contracts.* (1) Except as provided for in 16.505(b)(2), for orders issued under multiple delivery order contracts or multiple task order contracts, each awardee shall be provided a fair opportunity to be considered for each order in excess of $2,500. In determining the procedures for providing awardees a fair opportunity to be considered for each order, contracting officers shall exercise broad discretion and may consider factors such as past performance, quality of deliverables, cost control, price, cost, or other factors that the contracting officer, in the exercise of sound business judgment, believes are relevant to the placement of orders. Such procedures need not comply with the competition requirements of 48 CFR (FAR) part 6. The contracting officer need not request written proposals or conduct discussions with multiple contractors before issuing orders unless the contracting officer determines such actions to be necessary.

(2) Awardees need not be given a fair opportunity to be considered for a particular order in excess of $2,500 if the contracting officer determines that—

(i) The agency need for such services or supplies is of such urgency that providing such opportunity would result in unacceptable delays;

(ii) Only one such contractor is capable of providing such services or supplies required at the level of quality required because the services or supplies ordered are unique or highly specialized;

(iii) The order should be issued on a sole-source basis in the interest of economy and efficiency as a logical follow-on to an order already issued under the contract; or

(iv) It is necessary to place an order to satisfy a minimum guarantee.

(3) Soliciting offers from one or more awardees under a multiple award task order contract or delivery order contract shall satisfy the ''competing independently'' requirements of 48 CFR (FAR) 15.804–3(b)(3).

(4) The head of the agency shall designate a task order contract and delivery order contract ombudsman who shall be responsible for reviewing complaints from contractors on task order contracts and delivery order contracts. The ombudsman shall review complaints from the contractors and ensure that all contractors are afforded a fair opportunity to be considered, consistent with the procedures in the contract. The ombudsman shall be a senior agency official who is independent of the contracting officer and may be the agency's competition advocate.

(c) *Limitation on ordering period for task order contracts for advisory and assistance services.* (1) Except as provided for in 16.505(c)(2), the ordering period of a task order contract for advisory and assistance services, including all options or modifications, may not exceed five years unless a longer period is specifically authorized in a law that is applicable to such a contract. Notwithstanding the five year limitation or the requirements of 48 CFR (FAR) part 6, a task order contract for advisory and assistance services may be extended on a sole-source basis only once for a period not to exceed six months if—

(i) The head of the agency or designee determines that the award of a follow-on contract is delayed by circumstances that were not reasonably foreseeable at the time the initial contract was entered into; and

(ii) The extension is necessary to ensure continuity of services pending the award of the follow-on contract.

(2) The limitation on ordering period contained in 16.505(c)(1) is not applicable to the acquisition of supplies or services that includes the acquisition of advisory and assistance services if the head of an agency or designee determines that the advisory and assistance services are necessarily incident to, and not a significant component of, the contract.

16.506 Solicitation provisions and contract clauses.

* * * * *

(f) The contracting officer shall insert the provision at 48 CFR (FAR) 52.216–27, Election to Award Single or Multiple Task Order Contracts or Delivery Order Contracts, in solicitations for task or delivery order contracts that may result in multiple contract awards. This provision shall not be used for advisory and assistance services contracts.

(g) In accordance with 16.504(a)(4)(vi), the contracting officer

shall insert the provision at 48 CFR (FAR) 52.216–28, Notice of Intent to Make Multiple Awards Under a Task Order Contract for Advisory and Assistance Services That Exceeds Three Years and $10,000,000, in solicitations for task order contracts for advisory and assistance services that exceed three years and $10,000,000 (including all options) provided that no determination is made under 16.504(c)(2)(i)(A).

PART 52—SOLICITATION PROVISIONS AND CONTRACT CLAUSES

9. Section 52.216–18 is amended in the introductory text by removing ''16.505(a)'' and inserting ''16.506(a)'' in its place, and revising the clause date and paragraphs (b) and (c) to read as follows:

52.216–18 Ordering.

* * * * *

ORDERING (XXX 1995)

* * * * *

(b) All delivery orders or task orders are subject to the terms and conditions of this contract. In the event of conflict between a delivery order or task order and this contract, the contract shall control.

(c) If mailed, a delivery order or task order is considered ''issued'' when the Government deposits the order in the mail. Orders may be issued orally, by written telecommunications, or by other electronic means only if authorized in the Schedule.

(End of clause)

10. Section 52.216–19 is amended by revising the section heading, introductory text and clause heading and date to read as follows:

52.216–19 Order Limitations.

As prescribed in 16.506(b), insert a clause substantially the same as follows in solicitations and contracts when a definite-quantity contract, a requirements contract, or an indefinite-quantity contract is contemplated:

ORDER LIMITATIONS (XXX 1995)

* * * * *

52.216–20 [Amended]

11. Section 52.216–20 is amended in the introductory text by removing ''16.505(c)'' and inserting ''16.506(c)'' in its place, revising the clause date to read ''(XXX 1995)'', and in the first sentence of paragraph (c) by removing the word ''Delivery-''.

52.216–21 [Amended]

12. Section 52.216–21 is amended in the introductory text by removing ''16.505(d)'' and inserting ''16.506(d)'' in its place; in the clause heading by removing the date ''(APR 1984)'' and inserting ''(XXX 1995);'' in the second sentence of paragraph (b) by removing the word ''Delivery-''; and in the introductory texts of Alternates III and IV by removing the phrase ''or labor surplus area'' and revising the Alternate dates to read ''(XXX 1995)''.

52.216–22 [Amended]

13. Section 52.216–22 is amended in the introductory text by removing ''16.505(e)'' and inserting ''16.506(e)'' in its place; in the clause heading by removing the date ''(APR 1984)'' and inserting ''(XXX 1995)'' in its place; and in the first sentence of paragraph (c) by removing the word ''Delivery-''.

14. Section 52.216–27 is added to read as follows:

52.216–27 Election to Award Single or Multiple Task Order Contracts or Delivery Order Contracts.

As prescribed in 16.506(f), insert the following provision:

ELECTION TO AWARD SINGLE OR MULTIPLE TASK ORDER CONTRACTS OR DELIVERY ORDER CONTRACTS (XXX 1995)

The Government may elect to award a single delivery order contract or task order contract or to award multiple task order contracts or delivery order contracts for the same or similar services or supplies to two or more sources under this solicitation.

(End of provision)

15. Section 52.216–28 is added to read as follows:

52.216–28 Notice of Intent to Make Multiple Awards Under a Task Order Contract for Advisory and Assistance Services That Exceeds Three Years and $10,000,000.

As prescribed in 16.506(g), insert the following provision:

NOTICE OF INTENT TO MAKE MULTIPLE AWARDS UNDER A TASK ORDER CONTRACT FOR ADVISORY AND ASSISTANCE SERVICES THAT EXCEEDS THREE YEARS AND $10,000,000 (XXX 1995)

The Government intends to award multiple contracts for the same or similar advisory and assistance services to two or more sources under this solicitation unless the Government determines, after evaluation of offers, that only one offeror is capable of providing the services at the level of quality required.

(End of provision)

[FR Doc. 95–6439 Filed 3–15–95; 8:45 am]

BILLING CODE 6820–34–P

Reader Aids

Federal Register

Vol. 60, No. 51

Thursday, March 16, 1995

INFORMATION AND ASSISTANCE

Federal Register

Index, finding aids & general information	**202–523–5227**
Public inspection announcement line	**523–5215**
Corrections to published documents	**523–5237**
Document drafting information	**523–3187**
Machine readable documents	**523–4534**

Code of Federal Regulations

Index, finding aids & general information	**523–5227**
Printing schedules	**523–3419**

Laws

Public Laws Update Service (numbers, dates, etc.)	**523–6641**
Additional information	**523–5230**

Presidential Documents

Executive orders and proclamations	**523–5230**
Public Papers of the Presidents	**523–5230**
Weekly Compilation of Presidential Documents	**523–5230**

The United States Government Manual

General information	**523–5230**

Other Services

Data base and machine readable specifications	**523–4534**
Guide to Record Retention Requirements	**523–3187**
Legal staff	**523–4534**
Privacy Act Compilation	**523–3187**
Public Laws Update Service (PLUS)	**523–6641**
TDD for the hearing impaired	**523–5229**

ELECTRONIC BULLETIN BOARD

Free **Electronic Bulletin Board** service for Public Law numbers, Federal Register finding aids, and list of documents on public inspection. **202–275–0920**

FAX-ON-DEMAND

You may access our Fax-On-Demand service. You only need a fax machine and there is no charge for the service except for long distance telephone charges the user may incur. The list of documents on public inspection and the daily Federal Register's table of contents are available using this service. The document numbers are 7050-Public Inspection list and 7051-Table of Contents list. The public inspection list will be updated immediately for documents filed on an emergency basis.
NOTE: YOU WILL ONLY GET A LISTING OF DOCUMENTS ON FILE AND NOT THE ACTUAL DOCUMENT. Documents on public inspection may be viewed and copied in our office located at 800 North Capitol Street, N.W., Suite 700. The Fax-On-Demand telephone number is: **301–713–6905**

FEDERAL REGISTER PAGES AND DATES, MARCH

11017–11608.....1
11609–11896.....2
11897–12102.....3
12103–12394.....6
12395–12658.....7
12659–12858.....8
12859–13022.....9
13023–13366.....10
13367–13612.....13
13613–13888.....14
13889–14200.....15
14201–14350.....16

CFR PARTS AFFECTED DURING MARCH

At the end of each month, the Office of the Federal Register publishes separately a List of CFR Sections Affected (LSA), which lists parts and sections affected by documents published since the revision date of each title.

3 CFR

Proclamations:
6772.....11609
6773.....12101
6774.....12657
6775.....13887
6776.....13889

Executive Orders:
November 24, 1916 (Revoked in part by PLO 7121).....12886
12903 (Superseded by EO 12955).....13365
12954.....13023
12955.....13365
12956.....14199

Administrative Orders:
Memorandums:
March 2, 1995 12393
Presidential Determinations:
No. 95–15 of Feb. 28, 1995 12859

5 CFR

Ch. LXXVII.....12396
362.....11017
532.....12395, 12396
582.....13027
731.....13613
831.....14201
842.....14201
843.....13034
1300.....12396
1650.....13604
1653.....13604

Proposed Rules:
Ch. XIV 11057

7 CFR

29 .....12398, 12399, 12400, 13515
51.....11242
56.....12401, 13780
58.....11246
300.....14202
319.....14202
354.....11897
372.....13212
906.....13891
989.....12403
1209.....13613
1210.....13515
1942.....11019

Proposed Rules:
51.....11918, 13926
58 .....11919, 12154, 12156
319.....13382
945.....13080
1099.....12907
1230.....13384
1940.....13650, 13928

9 CFR

2.....13893
77.....11898
91.....13896
92.....13896, 13898
317.....12883
381.....12883

Proposed Rules:
1.....12908
3.....12908
92.....13929
102.....12159, 12162
104.....12159
105.....12159
114.....12162
116.....12159
160.....13084
161.....13084

10 CFR

50.....13615
55.....13615
73.....13615

Proposed Rules:
20.....13385

12 CFR

543.....12103
552.....12103
571.....12103
708a.....12759

Proposed Rules:
7.....11924
31.....11924
543.....13008
552.....13008
571.....13008
722.....13388

13 CFR

Proposed Rules:
120.....11941
122.....11941

14 CFR

11.....12034, 12108
25.....11194
39 .....11020, 11611, 11613, 11615, 11617, 11619, 11621, 11623, 12406, 12407, 12408, 12410, 12411, 12413, 12414, 12663, 12666, 13618, 13620, 13621, 13623, 13624
61.....11254
71 .....11625, 12108, 12667, 13626, 13900
91.....13627
95.....13035
97.....12109, 12110
121.....11194, 12034
135.....11194, 13010

1241 11022
1262 12668
Proposed Rules:
33 12360
39 ..... 11635, 11637, 11942, 11944, 11945, 12714, 14231, 14233, 14235, 14237
71 ..... 11057, 13931, 14238, 14240
121 ..... 13008, 13862
125 13862
135 13862

15 CFR

925 12592
Proposed Rules:
905 11947
944 14241

16 CFR

305 14209
Proposed Rules:
1700 12165

17 CFR

1 13901
239 11876
270 ..... 11876, 11887
274 11876
400 11022
401 11022
402 ..... 11022, 12825
403 11022
404 11022
405 11022
450 11022
Proposed Rules:
239 11890
270 11890
274 11890

18 CFR

Proposed Rules:
154 13651
158 13651
201 13651
250 13651
284 13651

19 CFR

12 13352
101 14211

20 CFR

416 14215
Proposed Rules:
200 11639
335 14241
404 12166
416 12166

21 CFR

173 11899
179 12669
328 13590
450 11026
510 ..... 11027, 14216
520 ..... 14216, 14217
522 14217
558 ..... 11027, 11028
Proposed Rules:
310 13014
314 13014

24 CFR

15 11901
25 13834
58 13518
92 13348
201 ..... 13834, 13854
202 13834
243 11828
290 11844
760 11828
813 11626
886 11844
888 12594
889 11828
890 ..... 11836, 13515
905 11626
908 11626
913 11626
3500 11194
Proposed Rules:
100 13840
888 11870

26 CFR

1 ..... 11028, 11906, 12415
Proposed Rules:
1 ..... 11059, 11060, 11195, 11950, 12034, 13213, 13393

28 CFR

0 11906
31 13330
40 13902

29 CFR

1910 ..... 11194, 13782
1915 ..... 11194, 13782, 14218
1917 13782
1918 13782
1926 11194
1952 ..... 12416, 12417
2509 12328
2619 13904
2676 13904
Proposed Rules:
1952 12488

30 CFR

914 13038
936 13040
944 13367
Proposed Rules:
Ch. VII 13858
254 13652
756 13086
773 13087
925 11640
926 13932
944 13935

31 CFR

356 13906
500 12885

32 CFR

199 12419
1636 13907
Proposed Rules:
199 12717
209 11642
311 13936

33 CFR

100 11629
110 14220
117 ..... 13629, 14221
143 13550
155 13318
157 13318
165 12112
Proposed Rules:
117 ..... 12178, 13393, 13395, 13653
165 ..... 14242, 14243, 14245, 14246
320 13654
325 13654
333 13654
402 11643

34 CFR

3 11907
75 ..... 12096, 12648

36 CFR

7 13629
1230 13908
Proposed Rules:
7 13662

38 CFR

3 ..... 12886, 14222

39 CFR

3001 ..... 12113, 12116
Proposed Rules:
111 12490

40 CFR

9 12670
52 ..... 12121, 12123, 12125, 12438, 12442, 12446, 12451, 12453, 12459, 12685, 12688, 12691, 12695, 12700, 13042, 13631, 13634, 13908
58 11907
61 13912
63 ..... 11029, 12670, 13045
70 ..... 12128, 12478, 13046
81 ..... 12453, 12459, 13368, 13634
180 ..... 11029, 11032, 12702, 12703, 12704, 12705, 12707, 13914
281 ..... 12630, 12709, 14334
282 ..... 12630, 14334
372 13047
721 11033
Proposed Rules:
50 13663
51 12492
52 ..... 12180, 12184, 12185, 12519, 12520, 12721, 12722, 13937
53 13663
58 12492
60 13937
61 13938
63 ..... 12723, 13088, 13664
68 13526
70 ..... 12521, 13088, 13683
81 12520
85 12185
148 11702
180 ..... 13938, 13939, 13941
194 11060
261 12525
266 11702
268 11702
271 ..... 11702, 12525
300 13944
302 12525
761 13095

42 CFR

410 14223
485 11632
486 11632
Proposed Rules:
65a 12525

43 CFR

2720 12710
Public Land Orders:
7100 12592
7117 11045
7118 11046
7119 11633
7120 11633
7121 12886
7122 12887
7123 12887
7124 13915

44 CFR

65 13049
67 13050
152 11236
Proposed Rules:
61 13945
67 13096
206 13945

45 CFR

2543 13055
Proposed Rules:
1180 12186

46 CFR

2 13550
30 13318
32 13318
70 13318
90 13318
172 13318
Proposed Rules:
10 13570
12 13570
67 12188

47 CFR

1 13636
2 13071
5 13636
15 13071
24 13915
32 12137
36 12137
61 13637
65 12137
73 ..... 11909, 11910, 11911, 13918
74 14224
Proposed Rules:
Ch. I 13102
1 13396
2 ..... 11644, 13687
63 11644
64 12529
73 ..... 12530, 12724, 12725, 13947

48 CFR

Ch. 99 12711
2 ..... 12366, 12384, 13397
3 ..... 12366, 13397
4 ..... 12366, 12384

5 .....12366, 12384, 13397
6.....12366, 13397
7.....12384, 13397
8.....12366, 12384
9 .....12366, 12384, 13397
10.....13397
11.....13397
12.....12384, 13397
13.....12366, 13397
14.....12384, 13397
15 .....12366, 12384, 13397
16 .....12366, 12384, 13397
22.....12366, 13397
23.....12366, 13397
25.....12366
27.....12366
28.....12366
29.....12366
32.....12366, 12384
36.....12366, 13397
41.....12366
42.....12366, 13397
43.....12366
44.....12366, 13397
45.....12366, 12384
46.....12366, 13397
47.....12366, 13397
49.....12366, 13397
52 .....12366, 12384, 13397
53 .....12366, 12384, 13397
209.....13073
219.....13074
223.....13075
235.....13076
252.....13073, 13075
701.....11911, 12825
703.....11911, 12825
715.....11911, 12825
724.....11911
731.....11911, 12825
752.....11911, 12825
927.....11812
952.....11812
970.....11812
1517.....12712
1837.....11634

Proposed Rules:

Ch. I 11198
1.....14340
6.....14346
7.....14340
16.....14346
17.....14340
32.....14156
37.....14340
45.....12530
49.....14340
52 .....12530, 14156, 14340, 14346
933.....11646
970.....11646
9904.....12725

49 CFR

1 .....11046, 13639, 14225
107.....12139
218.....11047
382.....13369
391.....13369
393.....12146
564.....14226
571 .....11913, 13216, 13286, 13297, 13639
575.....11913
583.....14228
653.....12296
654.....12296, 12298
661.....14174
1312.....13077
1314.....13077

Proposed Rules:

234.....11649
393.....13306
564.....14247
571 .....12192, 13688, 14247
661.....14178
800.....13948
830.....13948
831.....13948

50 CFR

17.....12483, 12887
204.....11050
611.....13780
625.....14230
646.....12592
651.....13078
654.....13918
663.....13377
675.....13780
676.....13780
681.....13380
672 .....11915, 12149, 12152, 13079
673.....11054, 12825
675 .....11915, 12149, 12487
676.....11916, 12152

Proposed Rules:

17 .....11768, 12531, 12728, 12730, 13105, 13397, 13950, 14253
20.....14194
222.....11951
227.....14253
649.....14261
663.....11062
672.....13106
675.....13106